JAGUAR

# Workshop Manual

# S-TYPE

## 2002.5 MY On

GETtheMANUALS.org

# TABLE OF CONTENTS

1: General Information

100: Service Information
100-00: General Information
Description and Operation
About This Manual
Application and Use of Specifications
General Service Information
Health and Safety Precautions
How To Use This Manual
Important Safety Instructions
Road/Roller Testing
Solvents, Sealants and Adhesives
Standard Workshop Practices

100-01: Identification Codes
Description and Operation
Identification Codes - VIN Range: M45255->N52047
Identification Codes - VIN Range: N52048->N99999

100-02: Jacking and Lifting
Description and Operation
Jacking
Lifting

100-04: Noise, Vibration and Harshness
Description and Operation
Noise, Vibration and Harshness (NVH)
Diagnosis and Testing
Noise, Vibration and Harshness (NVH)
General Procedures
Exhaust System Neutralizing

GETtheMANUALS.org

2: Chassis

204: Suspension
204-00: Suspension System - General Information
Specification
Description and Operation
Wheel Alignment Angles
Diagnosis and Testing
Suspension System
General Procedures
Camber and Caster Adjustment
Four-Wheel Alignment
Front Toe Adjustment (57.65.01)
Rear Toe Adjustment (57.65.08)
Wheel Bearing Inspection

204-01: Front Suspension
Specification
Description and Operation
Front Suspension
Diagnosis and Testing
Front Suspension
Removal and Installation
Front Lower Arm (60.35.53)
Rear Lower Arm (60.35.54)
Rear Lower Arm Bushing (60.35.56)
Shock Absorber and Spring Assembly (60.30.02)
Shock Absorber Bushing (60.30.16) (60.30.23)
Front Stabilizer Bar (60.10.01) - 2.5L NA V6 - AJV6/3.0L NA V6 - AJ27
Front Stabilizer Bar (60.10.01) - 2.7L V6 - TdV6
Front Stabilizer Bar (60.10.01) - V8 4.2L Petrol/V8 S/C 4.2L Petrol
Front Stabilizer Bar Link (60.10.02)
Stabilizer Bar Link Bushing (60.10.03)
Upper Arm LH (60.35.41)
Upper Arm RH (60.35.42)
Front Wheel Bearing and Wheel Hub (60.25.03)
Wheel Knuckle (60.25.23)

GETtheMANUALS.org

Disassembly and Assembly
Shock Absorber and Spring Assembly (60.30.21)
204-02: Rear Suspension
Specification
Description and Operation
Rear Suspension
Diagnosis and Testing
Rear Suspension
Removal and Installation
Lower Arm (64.35.43)
Shock Absorber and Spring Assembly
Shock Absorber Lower Bushing (64.30.39)
Rear Stabilizer Bar (64.35.08)
Upper Arm (64.25.31)
Rear Wheel Bearing (64.15.14)
Disassembly and Assembly
Shock Absorber and Spring Assembly

204-04: Wheels and Tires
Specification
Description and Operation
Wheels and Tires
Diagnosis and Testing
Wheels and Tires
Removal and Installation
Wheel and Tire (74.20.05)

204-05: Vehicle Dynamic Suspension
Description and Operation
Vehicle Dynamic Suspension
Diagnosis and Testing
Vehicle Dynamic Suspension
Removal and Installation
Accelerometer (86.56.54)
Adaptive Damping Module (86.56.35)
Front Vertical Accelerometer (86.56.53)
Rear Vertical Accelerometer (86.56.55)

GETtheMANUALS.org

205: Driveline
- 205-00: Driveline System - General Information
  - Description and Operation
    - Driveline System
  - Diagnosis and Testing
    - Driveline System
  - General Procedures
    - Driveline Angle Inspection

- 205-01: Driveshaft
  - Specification
  - Description and Operation
    - Driveshaft
  - Diagnosis and Testing
    - Driveshaft
  - General Procedures
    - Driveshaft Runout and Balancing
  - Removal and Installation
    - Driveshaft (47.15.01)

- 205-02: Rear Drive Axle/Differential
  - Specification
  - Description and Operation
    - Rear Drive Axle and Differential
  - Diagnosis and Testing
    - Rear Drive Axle and Differential
  - In-Vehicle Repair
    - Drive Pinion Seal (51.20.01)
  - Removal and Installation
    - Axle Assembly (51.25.13) - Vehicles Without: Differential Drain Plug
    - Axle Assembly (51.25.13) - Vehicles With: Differential Drain Plug
    - Axle Housing Bushing (64.25.30)

GETtheMANUALS.org

205-05: Rear Drive Halfshafts
Specification
Description and Operation
Rear Drive Halfshafts
Diagnosis and Testing
Rear Drive Halfshafts
Removal and Installation
Rear Halfshaft (47.10.13)
Inner Constant Velocity (CV) Joint Boot (47.10.33)
Outer Constant Velocity (CV) Joint Boot (47.10.32)

206: Brake System
206-00: Brake System - General Information
Specification - VIN Range: M45255->N52047
Specification - VIN Range: N52048->N99999
Description and Operation
Brake System - VIN Range: M45255->N52047
Brake System - VIN Range: N52048->N99999
Diagnosis and Testing
Brake System
General Procedures
Brake Disc Runout Check
Brake System Bleeding (70.25.03) - VIN Range: M45255->N52047
Brake System Bleeding (70.25.03) - VIN Range: N52048->N99999

206-03: Front Disc Brake
Specification - VIN Range: M45255->N52047
Specification - VIN Range: N52048->N99999
Description and Operation
Front Disc Brake - VIN Range: M45255->N52047
Front Disc Brake - VIN Range: N52048->N99999
Diagnosis and Testing
Front Disc Brake
Removal and Installation
Brake Disc Shield (70.10.18) - Vehicles With: Standard Brakes

206-04: Rear Disc Brake

GETtheMANUALS.org

Specification - VIN Range: M45255->N52047
Specification - VIN Range: N52048->N99999
Description and Operation
Rear Disc Brake - VIN Range: M45255->N52047
Rear Disc Brake - VIN Range: N52048->N99999
Diagnosis and Testing
Rear Disc Brake
Removal and Installation
Brake Caliper (70.55.03) (70.55.25) - VIN Range: N52048->N99999
Brake Disc (70.10.11) - VIN Range: N52048->N99999
Brake Disc Shield (70.10.19)
Brake Pads (70.40.03) - VIN Range: N52048->N99999

206-05: Parking Brake and Actuation
Specification
Description and Operation
Parking Brake
Diagnosis and Testing
Parking Brake - VIN Range: M45255->N13088
Parking Brake - VIN Range: N13089->N52047
Parking Brake - VIN Range: N52048->N99999
General Procedures
Parking Brake Cable Tension Release
Removal and Installation
Parking Brake Cable (70.35.29)
Parking Brake Module (70.35.47)
Parking Brake Pads (70.40.04) - Vehicles With: High Performance Brakes
Parking Brake Release Actuator (70.35.45)
Parking Brake Switch (70.35.46)

206-06: Hydraulic Brake Actuation
Specification
Description and Operation
Hydraulic Brake Actuation
Diagnosis and Testing
Hydraulic Brake Actuation
Removal and Installation

GETtheMANUALS.org

Brake Fluid Reservoir (70.30.16) - V8 4.2L Petrol/V8 S/C 4.2L Petrol/2.5L NA V6 – AJV6/3.0L NA V6 - AJ27
Brake Fluid Reservoir (70.30.16) - 2.7L V6 - TdV6
Brake Master Cylinder (70.30.08) - V8 4.2L Petrol/V8 S/C 4.2L Petrol/2.5L NA V6 – AJV6/3.0L NA V6 - AJ27
Brake Master Cylinder (70.30.08) - 2.7L V6 - TdV6

206-07: Power Brake Actuation
Specification
Description and Operation
Brake Booster
Diagnosis and Testing
Power Brake System
Removal and Installation
Brake Booster (70.50.17)
Brake Vacuum Pump - 2.7L V6 - TdV6

206-09: Anti-Lock Control - Stability Assist
Specification
Description and Operation
Anti-Lock Control - Stability Assist - VIN Range: M45255->N52047
Anti-Lock Control - Stability Assist - VIN Range: N52048->N99999
Diagnosis and Testing
Anti-Lock Control - Stability Assist - VIN Range: M45255->N52206
Anti-Lock Control - Stability Assist - VIN Range: N52207->N99999
Removal and Installation
Anti-Lock Brake System (ABS) Module (70.60.02)
Brake Master Cylinder Pressure Transducer
Brake Pedal Travel Sensor - VIN Range: M45255->N52206
Front Wheel Speed Sensor (70.60.03)
Hydraulic Control Unit (HCU) (70.60.18) (70.60.19) - VIN Range: M45255->N52206
Hydraulic Control Unit (HCU) (70.60.18) (70.60.19) - VIN Range: N52207->N99999
Rear Wheel Speed Sensor (70.60.04)
Steering Wheel Rotation Sensor (86.56.58)
Yaw Rate Sensor and Accelerometer (86.56.64)

GETtheMANUALS.org

211: Steering System
211-00: Steering System - General Information
Specification
Description and Operation
Steering System
Diagnosis and Testing
Steering System
General Procedures
Power Steering System Bleeding (57.15.02 )
Power Steering System Flushing (57.15.08)

211-02: Power Steering
Specification
Description and Operation
Power Steering
Diagnosis and Testing
Power Steering
Removal and Installation
Power Steering Control Valve Actuator (57.10.32) - Vehicles Built From: 02/2004
Power Steering Control Valve Actuator (57.10.32) - Vehicles Built Up To: 01/2004
Power Steering Fluid Cooler (57.15.11) - V8 4.2L Petrol/V8 S/C 4.2L Petrol/2.5L NA V6 - AJV6/3.0L NA V6 - AJ27
Power Steering Fluid Cooler (57.15.11) - 2.7L V6 - TdV6
Power Steering Fluid Reservoir (57.15.08)
Power Steering Pump (57.20.14) - 2.5L NA V6 - AJV6/3.0L NA V6 - AJ27
Power Steering Pump (57.20.14) - 2.7L V6 - TdV6
Power Steering Pump (57.20.14) - 2.7L V6 - TdV6
Power Steering Pump (57.20.14) - V8 4.2L Petrol/V8 S/C 4.2L Petrol
Steering Gear (57.10.01)
Steering Gear Bushing (57.10.30)

211-03: Steering Linkage
Specification
Description and Operation
Steering Linkage
Diagnosis and Testing
Steering Linkage

GETtheMANUALS.org

Removal and Installation
Steering Gear Boot (57.10.29)
Tie Rod End (57.55.02)

211-04: Steering Column
Specification
Description and Operation
Steering Column
Diagnosis and Testing
Steering Column
Removal and Installation
Ignition Switch Lock Cylinder (57.40.29)
Steering Column (57.40.01)
Steering Wheel (57.60.01)
Disassembly and Assembly
Steering Column

211-05: Steering Column Switches
Description and Operation
Steering Column Switches
Diagnosis and Testing
Steering Column Switches
Removal and Installation
Steering Column Lock Actuator (57.40.41)
Steering Column Multifunction Switch LH (86.65.78)
Steering Column Multifunction Switch RH (86.65.41)

GETtheMANUALS.org

3: Powertrain

303: Engine

303-00: Engine System - General Information
Diagnosis and Testing
Engine - V8 4.2L Petrol/V8 S/C 4.2L Petrol/2.5L NA V6 - AJV6/3.0L NA V6 - AJ27
Engine - 2.7L V6 - TdV6
General Procedures
Bearing Inspection
Camshaft Bearing Journal Clearance
Camshaft Bearing Journal Diameter
Camshaft End Play
Camshaft Lobe Lift
Camshaft Surface Inspection
Connecting Rod Cleaning
Connecting Rod Large End Bore
Crankshaft End Play
Crankshaft Main Bearing Journal Clearance - 2.5L NA V6 - AJV6/3.0L NA V6 - AJ27
Crankshaft Main Bearing Journal Clearance - V8 4.2L Petrol/V8 S/C 4.2L Petrol
Cylinder Bore Out-of-Round
Cylinder Head Distortion
Exhaust Manifold Cleaning and Inspection
Piston Inspection
Piston Pin Diameter
Piston Pin to Bore Diameter
Piston Ring End Gap
Piston Ring-to-Groove Clearance
Valve Spring Free Length
Valve Stem Diameter
Leakage Test Using Smoke Test Equipment

303-01A: Engine - 2.5L NA V6 - AJV6/3.0L NA V6 - AJ27
Specification
Description and Operation
Engine
Diagnosis and Testing

GETtheMANUALS.org

Engine
General Procedures
Valve Clearance Adjustment (12.29.48)
Valve Clearance Check (12.29.47)
In-Vehicle Repair
Camshafts LH (12.13.19)
Crankshaft Front Seal (12.21.14)
Crankshaft Pulley (12.21.09)
Crankshaft Rear Seal (12.21.20)
Cylinder Head (12.29.01)
Engine Front Cover (12.65.01)
Engine Mount LH (12.45.01)
Exhaust Manifold LH (30.15.55) - VIN Range: M45255->N52047
Exhaust Manifold LH (30.15.55) - VIN Range: N52048->N99999
Flexplate (12.53.13)
Flywheel (12.53.07)
Intake Manifold (30.15.01)
Lower Intake Manifold (30.15.61)
Oil Cooler (12.60.68)
Oil Pan (12.60.44)
Oil Pump (12.60.26)
Timing Drive Components (12.65.13)
Valve Cover LH (12.29.43)
Valve Cover RH (12.29.44)
Removal
Engine (12.41.01)
Disassembly
Engine
Disassembly and Assembly of Subassemblies
Cylinder Head (12.29.22)
Piston (12.17.02)
Assembly
Engine
Installation
Engine (12.41.01)

GETtheMANUALS.org

303-01B: Engine - V8 4.2L Petrol/V8 S/C 4.2L Petrol
- Specification
- Description and Operation
  - Engine
- Diagnosis and Testing
  - Engine
- General Procedures
  - Valve Clearance Adjustment (12.29.48)
  - Valve Clearance Check (12.29.47)
- In-Vehicle Repair
  - Camshafts RH (12.13.18) - VIN Range: M45255->N52047
  - Camshafts RH (12.13.18) - VIN Range: N52048->N99999
  - Crankshaft Front Seal (12.21.14)
  - Crankshaft Pulley (12.21.09)
  - Crankshaft Rear Seal (12.21.20)
  - Cylinder Head LH (12.29.02) - VIN Range: M45255->N52047
  - Cylinder Head LH (12.29.02) - VIN Range: N52048->N99999
  - Engine Front Cover (12.65.01) - VIN Range: M45255->N52047
  - Engine Front Cover (12.65.01) - VIN Range: N52048->N99999
  - Engine Mount LH (12.45.01)
  - Exhaust Manifold RH (30.15.56) - VIN Range: M45255->N52047
  - Exhaust Manifold RH (30.15.56) - VIN Range: N52048->N99999
  - Flexplate (12.53.13)
  - Intake Manifold (30.15.01) - VIN Range: M45255->N52047
  - Intake Manifold (30.15.01) - VIN Range: N52048->N99999
  - Oil Cooler (12.60.68) - Vehicles With: Supercharger
  - Oil Cooler (12.60.68) - Vehicles Without: Supercharger
  - Oil Pan (12.60.44)
  - Oil Pan Extension (12.60.48)
  - Oil Pump (12.60.26) - VIN Range: M45255->N52047
  - Oil Pump (12.60.26) - VIN Range: N52048->N99999
  - Secondary Timing Chain Tensioner
  - Timing Drive Components (12.65.13) - VIN Range: M45255->N52047
  - Timing Drive Components (12.65.13) - VIN Range: N52048->N99999
  - Valve Cover LH (12.29.43) - VIN Range: M45255->N52047
  - Valve Cover LH (12.29.43) - VIN Range: N52048->N99999

GETtheMANUALS.org

Valve Cover RH (12.29.44) - VIN Range: M45255->N52047
Valve Cover RH (12.29.44) - VIN Range: N52048->N99999
Removal and Installation
Crankshaft Main Bearing Carrier
Removal
Engine (12.41.01)
Disassembly
Engine
Disassembly and Assembly of Subassemblies
Cylinder Head (12.29.22)
Assembly
Engine
Installation
Engine (12.41.01)

303-01C: Engine - 2.7L V6 - TdV6
Specification
Description and Operation
Engine
Diagnosis and Testing
Engine
In-Vehicle Repair
Camshaft Front Seal
Camshaft Rear Seal
Camshafts LH (12.13.19)
Crankshaft Front Seal (12.21.14)
Crankshaft Rear Seal (12.21.20)
Crankshaft Vibration Damper (12.21.09)
Cylinder Head LH (12.29.02)
Engine Mount LH (12.45.01)
Engine Mount RH (12.45.03)
Exhaust Manifold LH (30.15.55)
Exhaust Manifold RH (30.15.56)
Flexplate (12.53.13)
Flywheel (12.53.07)
Oil Filter Element (12.60.02)
Oil Pan (12.60.44)

GETtheMANUALS.org

Oil Pan Extension (12.60.48)
Oil Pump (12.60.26)
Timing Belt
Timing Belt Cover
Valve Cover
Removal
Engine (12.41.01)
Installation
Engine (12.41.01)

303-03A: Engine Cooling - V8 4.2L Petrol/V8 S/C 4.2L Petrol/2.5L NA V6 - AJV6/3.0L NA V6 - AJ27
Specification
Description and Operation
Engine Cooling
Diagnosis and Testing
Engine Cooling
General Procedures
Cooling System Backflushing
Cooling System Draining, Filling and Bleeding
Cooling System Draining and Vacuum Filling
Cooling System Flushing
Removal and Installation
Coolant Expansion Tank (26.15.01)
Cooling Fan Motor and Shroud (26.25.25)
Cooling Module (26.40.16) - Vehicles Without: Supercharger
Radiator (26.40.01)
Thermostat (26.45.07) - 2.5L/3.0L
Thermostat (26.45.07) - 4.2L, Vehicles With: Supercharger
Thermostat (26.45.07) - 4.2L, Vehicles Without: Supercharger
Water Pump (26.50.01) - 4.2L, Vehicles With: Supercharger
Water Pump (26.50.01) - 4.2L, Vehicles Without: Supercharger

303-03B: Supercharger Cooling
Specification
Description and Operation
Supercharger Cooling

GETtheMANUALS.org

Diagnosis and Testing
Supercharger Cooling
General Procedures
Supercharger Cooling System Draining, Filling and Bleeding
Removal and Installation
Radiator
Water Pump

303-03C: Engine Cooling - 2.7L V6 - TdV6
Specification
Description and Operation
Engine Cooling
Diagnosis and Testing
Engine Cooling
General Procedures
Cooling System Draining, Filling and Bleeding
Removal and Installation
Coolant Expansion Tank (26.15.01)
Cooling Fan Motor and Shroud (26.25.25)
Radiator (26.40.01)
Thermostat (26.45.07)
Water Pump (26.50.01)

303-04A: Fuel Charging and Controls - 2.5L NA V6 - AJV6/3.0L NA V6 - AJ27
Specification
Description and Operation
Fuel Charging and Controls
Diagnosis and Testing
Fuel Charging and Controls - VIN Range: M45255->N52047
Fuel Charging and Controls - VIN Range: N52048->N99999
Removal and Installation
Fuel Charging Wiring Harness (86.70.22)
Fuel Injection Supply Manifold (19.60.13)
Fuel Injectors (18.10.02)
Fuel Pressure Regulator (19.45.11)
Throttle Body (19.70.04) - VIN Range: M45255->N52047
Throttle Body (19.70.04) - VIN Range: N52048->N99999

GETtheMANUALS.org

303-04B: Fuel Charging and Controls - V8 4.2L Petrol/V8 S/C 4.2L Petrol
- Specification
- Description and Operation
  - Fuel Charging and Controls
- Diagnosis and Testing
  - Fuel Charging and Controls - VIN Range: M45255->N52047
  - Fuel Charging and Controls - VIN Range: N52048->N99999
- Removal and Installation
  - Fuel Injection Supply Manifold (19.60.13)
  - Fuel Injectors (18.10.02)
  - Fuel Pressure Regulator (19.45.11)

303-04C: Fuel Charging and Controls - 2.7L V6 - TdV6
- Specification
- Description and Operation
  - Fuel Charging and Controls
- Diagnosis and Testing
  - Fuel Charging and Controls
- General Procedures
  - Fuel Injection Component Cleaning
- Removal and Installation
  - Fuel Injection Pump
  - Fuel Injector (18.10.01)
  - Intake Air Shutoff Throttle
  - Swirl Plate Actuator Diaphragm

303-04D: Fuel Charging and Controls - Turbocharger - 2.7L V6 - TdV6
- Specification
- Description and Operation
  - Turbocharger
- Diagnosis and Testing
  - Turbocharger
- Removal and Installation
  - Turbocharger LH
  - Turbocharger RH

GETtheMANUALS.org

303-05: Accessory Drive
- Specification
- Description and Operation
  - Accessory Drive
- Diagnosis and Testing
  - Accessory Drive - V8 4.2L Petrol/V8 S/C 4.2L Petrol/2.5L NA V6 - AJV6/3.0L NA V6 – AJ27
  - Accessory Drive - 2.7L V6 - TdV6
- Removal and Installation
  - Accessory Drive Belt (12.10.40) - 2.5L NA V6 - AJV6/3.0L NA V6 - AJ27
  - Accessory Drive Belt (12.10.40) - 2.7L V6 - TdV6
  - Accessory Drive Belt (12.10.40)
  - Accessory Drive Belt Idler Pulley (12.10.43) - 2.5L NA V6 - AJV6/3.0L NA V6 - AJ27
  - Accessory Drive Belt Idler Pulley (12.10.43) - 2.7L V6 - TdV6
  - Accessory Drive Belt Idler Pulley (12.10.43) - V8 4.2L Petrol/V8 S/C 4.2L Petrol, VIN Range: M44998->N52047
  - Accessory Drive Belt Idler Pulley (12.10.43) - V8 4.2L Petrol/V8 S/C 4.2L Petrol, VIN Range: N52048->R99999
  - Accessory Drive Belt Tensioner (12.10.41) - 2.5L NA V6 - AJV6/3.0L NA V6 - AJ27
  - Accessory Drive Belt Tensioner (12.10.41) - 2.7L V6 - TdV6
  - Accessory Drive Belt Tensioner (12.10.41) - V8 4.2L Petrol/V8 S/C 4.2L Petrol
  - Fuel Injection Pump Belt
  - Fuel Injection Pump Pulley
  - Supercharger Belt (18.50.08)
  - Supercharger Belt Idler Pulley (18.50.09)
  - Supercharger Belt Tensioner (18.50.24)

303-06: Starting System
- Specification
- Description and Operation
  - Starting System
- Diagnosis and Testing
  - Starting System
- Removal and Installation
  - Starter Motor (86.60.01) - V8 4.2L Petrol/V8 S/C 4.2L Petrol/2.5L NA V6 - AJV6/3.0L NA V6 - AJ27
  - Starter Motor (86.60.01) - 2.7L V6 - TdV6

GETtheMANUALS.org

303-07A: Engine Ignition - 2.5L NA V6 - AJV6/3.0L NA V6 - AJ27
Specification
Description and Operation
Engine Ignition
Diagnosis and Testing
Engine Ignition - VIN Range: M45255->N52047
Engine Ignition - VIN Range: N52048->N99999
Removal and Installation
Ignition Coil-On-Plug LH (18.20.44)
Ignition Coil-On-Plug RH (18.20.43)

303-07B: Engine Ignition - V8 4.2L Petrol/V8 S/C 4.2L Petrol
Specification
Description and Operation
Engine Ignition
Diagnosis and Testing
Engine Ignition - VIN Range: M45255->N52047
Engine Ignition - VIN Range: N52048->N99999
Removal and Installation
Ignition Coil-On-Plug (18.20.40)

303-07C: Glow Plug System
Specification
Description and Operation
Glow Plug System
Diagnosis and Testing
Glow Plug System
Removal and Installation
Glow Plugs

303-08A: Engine Emission Control - V8 4.2L Petrol/V8 S/C 4.2L Petrol/2.5L NA V6 – AJV6/3.0L NA V6 - AJ27
Specification - VIN Range: M45255->N52047
Specification - VIN Range: N52048->N99999
Description and Operation
Engine Emission Control - VIN Range: M45255->N52047

GETtheMANUALS.org

Engine Emission Control - VIN Range: N52048->N99999
Diagnosis and Testing
Engine Emission Control - VIN Range: M45255->N52047
Engine Emission Control - VIN Range: N52048->N80180
Engine Emission Control - VIN Range: N80181->R99999
Removal and Installation
Exhaust Gas Recirculation (EGR) Valve (17.45.01)
Exhaust Manifold to Exhaust Gas Recirculation (EGR) Valve Tube (17.45.11)
Secondary Air Injection (AIR) Control Valve - 3.0L
Secondary Air Injection (AIR) Control Valve - 4.2L, Vehicles Without: Supercharger
Secondary Air Injection (AIR) Control Valve - 4.2L, Vehicles With: Supercharger
Secondary Air Injection (AIR) Control Valve to Exhaust Manifold Tube LH - 3.0L
Secondary Air Injection (AIR) Control Valve to Exhaust Manifold Tube RH - 3.0L
Secondary Air Injection (AIR) Control Valve to Exhaust Manifold Tube - 4.2L, Vehicles Without: Supercharger
Secondary Air Injection (AIR) Control Valve to Exhaust Manifold Tube - 4.2L, Vehicles With: Supercharger
Secondary Air Injection (AIR) Pump

303-08B: Engine Emission Control - 2.7L V6 - TdV6
Specification
Description and Operation
Engine Emission Control
Diagnosis and Testing
Engine Emission Control
Removal and Installation
Exhaust Gas Recirculation (EGR) Valve LH
Exhaust Gas Recirculation (EGR) Valve Outlet Tube (17.45.11)
Exhaust Gas Recirculation (EGR) Valve RH

303-12A: Intake Air Distribution and Filtering - 2.5L NA V6 - AJV6/3.0L NA V6 - AJ27
Specification
Description and Operation
Intake Air Distribution and Filtering
Diagnosis and Testing
Intake Air Distribution and Filtering - VIN Range: M45255->N13088
Intake Air Distribution and Filtering - VIN Range: N13089->N52047

GETtheMANUALS.org

Intake Air Distribution and Filtering - VIN Range: N52048->N99999
Removal and Installation
Air Cleaner (19.10.05)
Air Cleaner Element (19.10.08)
Air Cleaner Outlet Pipe (19.10.31) - VIN Range: M45255->N52047
Air Cleaner Outlet Pipe (19.10.31) - VIN Range: N52048->N99999

303-12B: Intake Air Distribution and Filtering - V8 4.2L Petrol/V8 S/C 4.2L Petrol
Specification
Description and Operation
Intake Air Distribution and Filtering
Diagnosis and Testing
Intake Air Distribution and Filtering - VIN Range: M45255->N13088
Intake Air Distribution and Filtering - VIN Range: N13089->N52047
Intake Air Distribution and Filtering - VIN Range: N52048->N99999
Removal and Installation
Air Cleaner (19.10.05)
Air Cleaner Element (19.10.08)
Air Cleaner Outlet Pipe (19.10.31)
Charge Air Cooler
Supercharger (18.50.15) - VIN Range: M45255->N52047
Supercharger (18.50.15) - VIN Range: N52048->N99999
Supercharger Outlet Pipe (18.50.16)

303-12C: Intake Air Distribution and Filtering - 2.7L V6 - TdV6
Specification
Description and Operation
Intake Air Distribution and Filtering
Diagnosis and Testing
Intake Air Distribution and Filtering
Removal and Installation
Air Cleaner (19.10.05)
Air Cleaner Element (19.10.08)
Charge Air Cooler

303-13: Evaporative Emissions
Specification

GETtheMANUALS.org

Description and Operation
Evaporative Emissions - VIN Range: M45255->N52047
Evaporative Emissions - VIN Range: N52048->N99999
Diagnosis and Testing
Evaporative Emissions - VIN Range: M45255->N52047
Evaporative Emissions - VIN Range: N52048->N99999
Removal and Installation
Evaporative Emission Canister (17.15.13) - VIN Range: M45255->N52047
Evaporative Emission Canister (17.15.13) - VIN Range: N52048->N99999
Evaporative Emission Canister Purge Valve (17.15.30) - VIN Range: M45255->N52047
Evaporative Emission Canister Vent Solenoid (17.15.45)
Fuel Tank Pressure Sensor (19.55.31) - Vehicles Built Up To: 01/2004

303-14A: Electronic Engine Controls - 2.5L NA V6 - AJV6/3.0L NA V6 - AJ27
Specification
Description and Operation
Electronic Engine Controls
Diagnosis and Testing
Electronic Engine Controls - VIN Range: M45255->N52047
Electronic Engine Controls - VIN Range: N52048->N80180
Electronic Engine Controls - VIN Range: N80181->R99999
General Procedures
Powertrain Control Module (PCM) Long Drive Cycle Self-Test
Powertrain Control Module (PCM) Short Drive Cycle Self-Test
Removal and Installation
Brake Pedal Position (BPP) Switch
Camshaft Position (CMP) Sensor LH (18.31.12)
Camshaft Position (CMP) Sensor RH (18.31.11)
Catalyst Monitor Sensor (18.30.66)
Crankshaft Position (CKP) Sensor (18.30.12)
Engine Control Module (ECM) (18.30.01)
Engine Coolant Temperature (ECT) Sensor (18.30.10) - VIN Range: M45255->N52047
Engine Coolant Temperature (ECT) Sensor (18.30.10) - VIN Range: N52048->N99999
Fuel Temperature Sensor (18.30.99)

GETtheMANUALS.org

Heated Oxygen Sensor (HO2S)
Intake Manifold Tuning (IMT) Valve LH (19.70.30)
Knock Sensor (KS) LH (18.30.92)
Knock Sensor (KS) RH (18.30.93)
Manifold Absolute Pressure (MAP) Sensor (18.30.86)
Mass Air Flow (MAF) Sensor (18.30.15)
Oil Temperature Sensor (18.31.01)
Variable Camshaft Timing (VCT) Oil Control Solenoid (18.30.90)

303-14B: Electronic Engine Controls - V8 4.2L Petrol/V8 S/C 4.2L Petrol
Specification
Description and Operation
Electronic Engine Controls
Diagnosis and Testing
Electronic Engine Controls - VIN Range: M45255->N52047
Electronic Engine Controls - VIN Range: N52048->N80180
Electronic Engine Controls - VIN Range: N80181->R99999
General Procedures
Powertrain Control Module (PCM) Long Drive Cycle Self-Test
Powertrain Control Module (PCM) Short Drive Cycle Self-Test
Removal and Installation
Brake Pedal Position (BPP) Switch
Camshaft Position (CMP) Sensor LH (18.31.12)
Camshaft Position (CMP) Sensor RH (18.31.11)
Catalyst Monitor Sensor (18.30.66)
Crankshaft Position (CKP) Sensor (18.30.12)
Engine Control Module (ECM) (18.30.01)
Engine Coolant Temperature (ECT) Sensor (18.30.10)
Fuel Temperature Sensor (18.30.99)
Heated Oxygen Sensor (HO2S)
Intake Air Temperature (IAT) Sensor (18.30.52)
Knock Sensor (KS) LH (18.30.92)
Manifold Absolute Pressure (MAP) Sensor (18.30.86)
Mass Air Flow (MAF) Sensor (18.30.15)
Oil Temperature Sensor (18.31.01)
Variable Camshaft Timing (VCT) Oil Control Solenoid (18.30.90)

GETtheMANUALS.org

303-14C: Electronic Engine Controls - 2.7L V6 - TdV6
Specification
Description and Operation
Electronic Engine Controls
Diagnosis and Testing
Electronic Engine Controls
Removal and Installation
Brake Pedal Position (BPP) Switch
Camshaft Position (CMP) Sensor (18.30.63)
Crankshaft Position (CKP) Sensor (18.30.12)
Crankshaft Position (CKP) Sensor Ring
Engine Control Module (ECM) (18.30.01)
Engine Coolant Temperature (ECT) Sensor (18.30.10)
Engine Oil Pressure (EOP) Sensor
Fuel Rail Pressure (FRP) Sensor (18.30.98)
Fuel Temperature Sensor (18.30.99)
Knock Sensor (KS) LH (18.30.92)
Knock Sensor (KS) RH (18.30.93)
Manifold Absolute Pressure (MAP) Sensor (18.30.86)
Mass Air Flow (MAF) Sensor (18.30.15)

307: Automatic Transmission/Transaxle
307-01: Automatic Transmission/Transaxle
Specification
Description and Operation
Transmission Description
Diagnosis and Testing
Diagnostic Strategy - VIN Range: M45255->N52047
Diagnostic Strategy - VIN Range: N52048->N99999
General Procedures
Transmission Fluid Drain and Refill (44.24.02)
Transmission Fluid Level Check
In-Vehicle Repair
Extension Housing Seal (44.20.18)
Transmission Fluid Pan, Gasket and Filter (44.24.07)
Transmission Control Module (TCM) and Main Control Valve Body
Removal

GETtheMANUALS.org

Transmission (44.20.01) - 2.5L NA V6 - AJV6/3.0L NA V6 - AJ27
Transmission (44.20.01) - 2.7L V6 - TdV6
Transmission (44.20.01) - V8 4.2L Petrol/V8 S/C 4.2L Petrol
Disassembly and Assembly of Subassemblies
Input Shaft Seal (44.32.07)
Installation
Transmission (44.20.01) - 2.5L NA V6 - AJV6/3.0L NA V6 - AJ27
Transmission (44.20.01) - 2.7L V6 - TdV6
Transmission (44.20.01) - V8 4.2L Petrol/V8 S/C 4.2L Petrol

307-02: Transmission/Transaxle Cooling
Specification
Description and Operation
Transmission Cooling
Diagnosis and Testing
Transmission Cooling
Removal and Installation
Transmission Fluid Cooler (44.24.10)
Transmission Fluid Cooler Tubes (44.24.19)

307-05: Automatic Transmission/Transaxle External Controls
Specification
Description and Operation
External Controls
Diagnosis and Testing
External Controls
General Procedures
Selector Lever Cable Adjustment (44.15.07)
Removal and Installation
Selector Lever Cable and Bracket (44.15.08)
Selector Lever Assembly (44.15.04)

308: Manual Transmission/Transaxle, Clutch and Transfer Case
308-00: Manual Transmission/Transaxle and Clutch - General Information
Specification
Description and Operation
Manual Transmission and Clutch

GETtheMANUALS.org

Diagnosis and Testing
Manual Transmission and Clutch
General Procedures
Clutch System Bleeding (33.15.01)
Release Hub and Bearing Check

308-01: Clutch
Specification
Description and Operation
Clutch
Diagnosis and Testing
Clutch
Removal and Installation
Clutch Disc and Pressure Plate (12.53.13) (33.10.01)

308-02: Clutch Controls
Specification
Description and Operation
Clutch Controls
Diagnosis and Testing
Clutch Controls
Removal and Installation
Clutch Master Cylinder (33.20.01)
Clutch Slave Cylinder (33.35.01)

308-03A: Manual Transmission/Transaxle - Vehicles With: 5-Speed Manual Transmission – GETRAG 221
Specification
Description and Operation
Manual Transmission
Diagnosis and Testing
Manual Transmission
General Procedures
Drain Procedure
Fill Procedure
In-Vehicle Repair
Gearshift Control Shaft Seal (37.23.08)

GETtheMANUALS.org

Input Shaft Seal (37.23.09)
Output Shaft Seal (37.23.01)
Support Insulator (37.16.42)
Removal
Transmission (37.20.01)
Installation
Transmission (37.20.01)

308-03B: Manual Transmission/Transaxle - Vehicles With: S6-53 6-Speed Manual Transmission
Specification
Description and Operation
Manual Transmission
Diagnosis and Testing
Manual Transmission
General Procedures
Drain Procedure
Fill Procedure
In-Vehicle Repair
Countershaft Seal
Gearshift Control Shaft Seal (37.23.08)
Input Shaft Seal (37.23.09)
Output Shaft Seal (37.23.01)
Support Insulator (37.16.42)
Removal
Transmission (37.20.01)
Installation
Transmission (37.20.01)

308-06: Manual Transmission/Transaxle External Controls
Specification
Description and Operation
External Controls
Diagnosis and Testing
External Controls
Removal and Installation
Gearshift Lever Bushing

GETtheMANUALS.org

Gearshift Linkage (37.16.03) - 2.5L NA V6 - AJV6/3.0L NA V6 - AJ27
Gearshift Linkage (37.16.03) - 2.7L V6 - TdV6

309: Exhaust System
309-00: Exhaust System
Specification - VIN Range: M45255->N52047
Specification - VIN Range: N52048->N99999
Description and Operation
Exhaust System - VIN Range: M45255->N52047
Exhaust System - VIN Range: N52048->N99999
Diagnosis and Testing
Exhaust System - VIN Range: M45255->N13088
Exhaust System - VIN Range: N13089->N99999
Removal and Installation
Catalytic Converter (17.50.05) - V8 4.2L Petrol/V8 S/C 4.2L Petrol/2.5L NA V6 – AJV6/3.0L NA V6 - AJ27
Catalytic Converter (17.50.05) - 2.7L V6 - TdV6
Diesel Particulate Filter (DPF)
Diesel Particulate Filter (DPF) Differential Pressure Sensor
Exhaust System - V8 4.2L Petrol/V8 S/C 4.2L Petrol/2.5L NA V6 - AJV6/3.0L NA V6 – AJ27
Front Muffler (30.10.18)
Muffler and Tailpipe (30.10.52)

310: Fuel System
310-00: Fuel System - General Information
Specification
Description and Operation
Fuel System - VIN Range: M45255->N52047
Fuel System - VIN Range: N52048->N99999
Diagnosis and Testing
Fuel System
General Procedures
Fuel System Pressure Check
Fuel System Pressure Release (19.50.02)
Fuel Tank Draining - V8 4.2L Petrol/V8 S/C 4.2L Petrol/2.5L NA V6 - AJV6/3.0L NA V6 - AJ27, VIN Range: M45255->N52047

GETtheMANUALS.org

Fuel Tank Draining - 2.7L V6 - TdV6, VIN Range: M45255->N52047
Fuel Tank Draining - VIN Range: N52048->N99999
High-Pressure Fuel System Bleeding
Low-Pressure Fuel System Bleeding
Quick Release Coupling - Push Connect
Quick Release Coupling
Spring Lock Couplings

310-01: Fuel Tank and Lines
Specification
Description and Operation
Fuel Tank and Lines - VIN Range: M45255->N52047
Fuel Tank and Lines - VIN Range: N52048->N99999
Diagnosis and Testing
Fuel Tank and Lines - V8 4.2L Petrol/V8 S/C 4.2L Petrol/2.5L NA V6 - AJV6/3.0L NA V6 - AJ27, VIN Range: M45255->N52047
Fuel Tank and Lines - V8 4.2L Petrol/V8 S/C 4.2L Petrol/2.5L NA V6 - AJV6/3.0L NA V6 - AJ27, VIN Range: N52048->N80180
Fuel Tank and Lines - V8 4.2L Petrol/V8 S/C 4.2L Petrol/2.5L NA V6 - AJV6/3.0L NA V6 - AJ27, VIN Range: N80181->R99999
Fuel Tank and Lines - 2.7L V6 - TdV6
Removal and Installation
Fuel Filter (19.25.02) - V8 4.2L Petrol/V8 S/C 4.2L Petrol/2.5L NA V6 - AJV6/3.0L NA V6 - AJ27
Fuel Filter (19.25.02) - 2.7L V6 - TdV6
Fuel Level Sender LH - V8 4.2L Petrol/V8 S/C 4.2L Petrol/2.5L NA V6 - AJV6/3.0L NA V6 - AJ27, VIN Range: M45255->N52047
Fuel Level Sender LH - V8 4.2L Petrol/V8 S/C 4.2L Petrol/2.5L NA V6 - AJV6/3.0L NA V6 - AJ27, VIN Range: N52048->N99999
Fuel Level Sender RH - V8 4.2L Petrol/V8 S/C 4.2L Petrol/2.5L NA V6 - AJV6/3.0L NA V6 - AJ27, VIN Range: M45255->N52047
Fuel Level Sender RH - V8 4.2L Petrol/V8 S/C 4.2L Petrol/2.5L NA V6 - AJV6/3.0L NA V6 - AJ27, VIN Range: N52048->N99999
Fuel Pump Module (19.45.08) - V8 4.2L Petrol/V8 S/C 4.2L Petrol/2.5L NA V6 – AJV6/3.0L NA V6 - AJ27, VIN Range: M45255->N52047
Fuel Pump Module (19.45.08) - V8 4.2L Petrol/V8 S/C 4.2L Petrol/2.5L NA V6 – AJV6/3.0L NA V6 - AJ27, VIN Range: N52048->N99999

GETtheMANUALS.org

Fuel Pump Module (19.45.08) - 2.7L V6 - TdV6
Fuel Tank (19.55.01) - V8 4.2L Petrol/V8 S/C 4.2L Petrol/2.5L NA V6 - AJV6/3.0L NA V6 - AJ27
Fuel Tank (19.55.01) - 2.7L V6 - TdV6
Fuel Tank Filler Pipe (19.55.33)
Fuel Transfer Pump (19.45.21) - V8 4.2L Petrol/V8 S/C 4.2L Petrol/2.5L NA V6 – AJV6/3.0L NA V6 - AJ27, VIN Range: M45255->N52047
Fuel Transfer Unit - V8 4.2L Petrol/V8 S/C 4.2L Petrol/2.5L NA V6 - AJV6/3.0L NA V6 - AJ27, VIN Range: N52048->N99999
Fuel Transfer Unit - 2.7L V6 - TdV6
Inertia Fuel Shutoff (IFS) Switch (18.30.35)

310-02: Acceleration Control
Specification
Description and Operation
Acceleration Control
Diagnosis and Testing
Acceleration Control
Removal and Installation
Accelerator Pedal (19.20.01)
Accelerator Pedal (19.20.01) - Vehicles With: Adjustable Pedals

310-03: Speed Control
Specification
Description and Operation
Speed Control - VIN Range: M45255->N52047
Speed Control - VIN Range: N52048->N99999
Diagnosis and Testing
Speed Control - VIN Range: M45255->N13088
Speed Control - VIN Range: N13089->N52047
Speed Control - VIN Range: N52048->N99999
General Procedures
Speed Control Module Alignment
Removal and Installation
Speed Control Deactivator Switch (19.75.20)
Speed Control Module (19.75.26)
Speed Control Sensor

GETtheMANUALS.org

Speed Control Switch (19.75.25)

4: Electrical

412: Climate Control System
412-00: Climate Control System - General Information
Specification
Description and Operation
Climate Control System
Diagnosis and Testing
Climate Control System
General Procedures
Air Conditioning (A/C) System Flushing
Air Conditioning (A/C) System Recovery, Evacuation and Charging (82.30.30)
Contaminated Refrigerant Handling
Electronic Leak Detection
Fluorescent Dye Leak Detection
Inspection and Assembly Requirements
Manifold Gauge Set Connection
Refrigerant Oil Adding
Refrigerant System Tests

412-01: Air Distribution and Filtering
Specification
Description and Operation
Air Distribution and Filtering
Diagnosis and Testing
Air Distribution and Filtering
Removal and Installation
Cabin Air Filter (76.10.09)
Center Registers (82.20.38)
Driver Side Register (82.20.39)
Driver Side Register Duct (82.20.49)
Floor Console Register Duct (82.20.37)
Front Footwell Duct LH (82.20.91)
Front Footwell Duct RH (82.20.92)
Passenger Side Register (82.20.40)

GETtheMANUALS.org

Passenger Side Register Duct (82.20.51)
Rear Footwell Duct (82.20.96)

412-02A: Heating and Ventilation
Specification
Description and Operation
Heating and Ventilation
Diagnosis and Testing
Heating and Ventilation
Removal and Installation
Auxiliary Coolant Flow Pump (82.25.59) - 2.7L V6 - TdV6
Auxiliary Coolant Flow Pump (82.25.59) - V8 4.2L Petrol/V8 S/C 4.2L Petrol
Blower Motor (82.25.66)
Dual Coolant Flow Valve (82.20.33) - V8 4.2L Petrol/V8 S/C 4.2L Petrol/2.5L NA V6 – AJV6/3.0L NA V6 - AJ27
Dual Coolant Flow Valve (82.20.33) - 2.7L V6 - TdV6
Heater Core and Evaporator Core Housing (82.25.21)
Heater Hose (80.25.01) - V8 4.2L Petrol/V8 S/C 4.2L Petrol/2.5L NA V6 - AJV6/3.0L NA V6 - AJ27
Disassembly and Assembly
Heater Core and Evaporator Core Housing

412-02B: Auxiliary Heating
Specification
Description and Operation
Auxiliary Heater
Diagnosis and Testing
Auxiliary Heater
Fuel Fired Booster Heater
Removal and Installation
Auxiliary Heater

412-03: Air Conditioning
Specification
Description and Operation
Air Conditioning
Diagnosis and Testing

GETtheMANUALS.org

Air Conditioning
Removal and Installation
Air Conditioning (A/C) Compressor (82.10.20) - 2.5L NA V6 - AJV6/3.0L NA V6 - AJ27
Air Conditioning (A/C) Compressor (82.10.20) - V8 4.2L Petrol/V8 S/C 4.2L Petrol
Air Conditioning (A/C) Compressor (82.10.20) - 2.7L V6 - TdV6
Clutch and Clutch Field Coil (82.10.25)
Condenser Core (82.15.07)
Desiccant Bag (82.17.03)
Pressure Cutoff Switch (82.10.32) - V8 4.2L Petrol/V8 S/C 4.2L Petrol/2.5L NA V6 – AJV6/3.0L NA V6 - AJ27
Pressure Cutoff Switch (82.10.32) - 2.7L V6 - TdV6

412-04: Control Components
Specification
Description and Operation
Control Components
Diagnosis and Testing
Control Components
Removal and Installation
Air Discharge Temperature Sensor (82.20.64)
Ambient Air Temperature Sensor (82.20.02)
Climate Control Assembly (82.20.07)
Cold Air Bypass Blend Door Actuator (82.20.86)
Defrost Vent/Register Blend Door Actuator (82.20.84)
Footwell Vent/Duct Blend Door Actuator (80.20.20 or 82.20.85)
Instrument Panel Blend Door Actuator (82.20.83)
In-Vehicle Temperature Sensor (82.20.03)
Recirculation Blend Door Actuator (82.20.67)
Sunload Sensor (82.20.70)

413: Instrumentation and Warning Systems
413-00: Instrument Cluster and Panel Illumination
Diagnosis and Testing
Instrument Cluster and Panel Illumination

413-01: Instrument Cluster
Specification - Vehicles Built Up To: 01/2004

GETtheMANUALS.org

Description and Operation
Instrument Cluster
Diagnosis and Testing
Instrument Cluster
Removal and Installation
Indicator Bulb (86.45.61) - Vehicles Built Up To: 01/2004
Instrument Cluster (88.20.01)
Instrument Cluster Lens (88.20.28)

413-06: Horn
Specification
Description and Operation
Horn
Diagnosis and Testing
Horn
Removal and Installation
Horn (86.30.02) (86.30.10)
Horn Switch (86.30.01)

413-08: Information and Message Center
Description and Operation
Information and Message Center
Diagnosis and Testing
Information and Message Center
Removal and Installation
Message Center Switch (86.66.11)

413-09: Warning Devices
Description and Operation
Warning Devices
Diagnosis and Testing
Warning Devices
General Procedures
Oil Change Indicator Reset

413-13: Parking Aid
Description and Operation

GETtheMANUALS.org

Parking Aid
Diagnosis and Testing
Parking Aid
Removal and Installation
Front Parking Aid Sensor (86.62.33) - Vehicles Built From: 02/2004
Parking Aid Module (86.80.39)
Parking Aid Speaker (86.62.02)
Rear Parking Aid Sensor (86.54.14) (86.62.01) - Vehicles Built From: 02/2004
Rear Parking Aid Sensor (86.54.14) (86.62.01) - Vehicles Built Up To: 01/2004

414: Battery and Charging System
414-00: Battery and Charging System - General Information
Description and Operation
Charging System
Battery Care
Quiescent Drain
Diagnosis and Testing
Charging System - V8 4.2L Petrol/V8 S/C 4.2L Petrol/2.5L NA V6 - AJV6/3.0L NA V6 – AJ27
Charging System - 2.7L V6 - TdV6
General Procedures
Battery Charging

414-01: Battery, Mounting and Cables
Specification
Description and Operation
Battery and Cables
Diagnosis and Testing
Battery
General Procedures
Battery Connect (86.15.15)
Battery Disconnect and Connect
Removal and Installation
Battery (86.15.01)
Battery Ground Cable (86.15.19)
Battery Tray (86.15.11)

GETtheMANUALS.org

414-02: Generator and Regulator
Specification
Description and Operation
Generator
Diagnosis and Testing
Generator
Removal and Installation
Generator (86.10.02) - 2.5L NA V6 - AJV6/3.0L NA V6 - AJ27
Generator (86.10.02) - 2.7L V6 - TdV6
Generator (86.10.02) - V8 4.2L Petrol/V8 S/C 4.2L Petrol

415: Information and Entertainment Systems
415-00: Information and Entertainment System - General Information
Diagnosis and Testing
Audio System
General Procedures
Cassette Player Cleaning

415-01: Audio Unit
Specification
Description and Operation
Audio System
Diagnosis and Testing
Audio System
Removal and Installation
Amplifier (86.50.10)
Audio Unit (86.50.03)
Compact Disc (CD) Changer (86.50.06)
Steering Wheel Audio Controls (86.50.42)

415-02: Antenna
Description and Operation
Antenna
Diagnosis and Testing
Antenna
Removal and Installation
Antenna Isolator Module (86.51.08)

GETtheMANUALS.org

415-03: Speakers
Description and Operation
Speakers
Diagnosis and Testing
Speakers
Removal and Installation
Front Door Speaker (86.50.13)
Rear Door Speaker (86.50.14)
Subwoofer Speaker (86.51.05)

417: Lighting
417-01: Exterior Lighting
Specification
Description and Operation
Exterior Lighting
Diagnosis and Testing
Headlamps
General Procedures
Headlamp Adjustment (86.40.18)
Removal and Installation
Ballast (86.41.52) - Vehicles With: High Intensity Discharge Headlamps
Front Fog Lamp (86.40.96) - Vehicles Built From: 02/2004
Front Fog Lamp (86.40.96) - Vehicles Built Up To: 01/2004
Headlamp Assembly (86.41.33)
Headlamp Bulb (86.42.14) - Vehicles With: High Intensity Discharge Headlamps
Headlamp Leveling Module
Headlamp Leveling Motor (86.42.04) - Vehicles With: High Intensity Discharge \ Headlamps
Headlamp Leveling Motor (86.42.04) - Vehicles Without: High Intensity Discharge Headlamps
Headlamp Leveling Sensor (86.42.15)
Headlamp Leveling Switch (86.65.87)
Rear Lamp Assembly (86.40.70) - Vehicles Built From: 02/2004
Rear Lamp Assembly (86.40.70) - Vehicles Built Up To: 01/2004
Stoplamp Switch

GETtheMANUALS.org

417-02: Interior Lighting
Description and Operation
Interior Lighting
Diagnosis and Testing
Interior Lighting

417-04: Daytime Running Lamps (DRL)
Description and Operation
Daytime Running Lamps (DRL)
Diagnosis and Testing
Daytime Running Lamps (DRL)

418: Electrical Distribution
418-00: Module Communications Network
Description and Operation
Communications Network
Diagnosis and Testing
Communications Network - VIN Range: M45255->N52047
Communications Network - VIN Range: N52048->N99999

418-01: Module Configuration
Diagnosis and Testing
Module Configuration

418-02: Wiring Harnesses
Description and Operation
Wiring Harness
General Procedures
Wiring Harness Repair

419: Electronic Feature Group
419-01A: Anti-Theft - Active
Description and Operation
Anti-Theft - Active
Diagnosis and Testing
Anti-Theft - Active
Removal and Installation

GETtheMANUALS.org

Anti-Theft Alarm Horn (86.52.03)

419-01B: Anti-Theft - Passive
Description and Operation
Anti-Theft - Passive
Diagnosis and Testing
Anti-Theft - Passive
General Procedures
Anti-Theft Security Access
Key Programming Using Diagnostic Equipment
Key Programming Using Two Programmed Keys
Removal and Installation
Passive Anti-Theft System (PATS) Transceiver (86.52.30)

419-05: Telematics
Description and Operation
Telematics
Diagnosis and Testing
Telematics
Removal and Installation
Global Positioning System (GPS) Antenna (86.56.61)
Module (86.56.59)

419-07: Navigation System
Description and Operation
Navigation System
Diagnosis and Testing
Navigation System
Removal and Installation
Navigation System Antenna (86.62.06)
Navigation System Display Module (86.62.07)
Navigation System Module (86.62.05)

419-08: Cellular Phone
Description and Operation
Cellular Phone - VIN Range: M45255->N52047
Cellular Phone - VIN Range: N52048->N99999

GETtheMANUALS.org

Diagnosis and Testing
Cellular Phone
Cellular Phone - Vehicles With: Bluetooth
Removal and Installation
Bluetooth Module
Cellular Phone Antenna (86.51.17)

419-10: Multifunction Electronic Modules
Specification
Description and Operation
Module Controlled Functions
Diagnosis and Testing
Multifunction Electronic Module
Removal and Installation
Driver Door Module (DDM) (86.80.29)
Driver Seat Module (DSM) (86.75.28)
Front Electronic Module (FEM) (86.80.41)
Multifunction Voice Activated Module (86.53.13) (86.80.40)
Rear Electronic Module (REM) (86.80.37)

5: Body and Paint

501: Body and Paint
501-02: Front End Body Panels
Description and Operation
Front End Body Panels
Removal and Installation
Air Deflector (76.11.41)
Cowl Panel Grille (76.10.01) (76.43.39)
Fender Splash Shield (76.10.90)
Radiator Grille Opening Panel (76.10.06)
Radiator Splash Shield (76.22.90)

501-03: Body Closures
Specification
Description and Operation
Body Closures

GETtheMANUALS.org

General Procedures
Hood Alignment (76.16.02)
Luggage Compartment Lid Alignment (76.19.03)
Rear Door Alignment (76.28.08)
Removal and Installation
Front Door Opening Weatherstrip (76.40.01)
Hood (76.16.01)

501-05: Interior Trim and Ornamentation
Specification
Description and Operation
Interior Trim
Removal and Installation
A-Pillar Trim Panel (76.13.31)
B-Pillar Lower Trim Panel (76.13.29)
B-Pillar Upper Trim Panel (76.13.28)
Cowl Side Trim Panel (76.13.30)
C-Pillar Trim Panel (76.13.73)
Front Door Trim Panel (76.34.01)
Headliner (76.64.01)
Parcel Shelf (76.67.06)
Rear Door Trim Panel (76.34.04)
Rear Window Blind (76.14.04)
Rear Window Blind Arm
Rear Window Blind Motor
Scuff Plate Trim Panel (76.13.81)
Sun Visor (76.10.48)

501-08: Exterior Trim and Ornamentation
Description and Operation
Exterior Trim
Removal and Installation
Radiator Grille (76.55.03)
Window Moulding (76.43.20)

501-09: Rear View Mirrors
Specification

GETtheMANUALS.org

Description and Operation
Rear View Mirrors
Diagnosis and Testing
Rear View Mirrors
Removal and Installation
Auto-Dimming Interior Mirror (76.10.56)
Exterior Mirror (76.10.52)
Exterior Mirror Cover (76.10.55)
Exterior Mirror Glass (76.10.53)
Exterior Mirror Motor (76.10.57) (76.11.09)

501-10: Seating
Specification
Description and Operation
Seats
Diagnosis and Testing
Seats
Removal and Installation
Front Seat (76.70.01)
Front Seat Backrest (76.70.06) - Vehicles Built From: 02/2004
Front Seat Backrest (76.70.06) - Vehicles Built Up To: 01/2004
Front Seat Backrest Cover (76.70.15)
Front Seat Cushion Cover (76.70.33) - Vehicles Built From: 02/2004
Front Seat Cushion Cover (76.70.33) - Vehicles Built Up To: 01/2004
Front Seat Head Restraint Motor (86.75.17)
Front Seat Height Adjustment Motor (86.75.29)
Front Seat Recliner Motor (86.75.04)
Front Seat Track Motor (86.75.33)
Lumbar Motor (86.75.12) - Vehicles Built From: 02/2004
Lumbar Motor (86.75.12) - Vehicles Built Up To: 01/2004
Rear Seat Backrest Cover (76.70.48) (78.90.12)
Rear Seat Bolster (76.70.67)
Rear Seat Cushion (76.70.37)
Seat Base (76.70.08) - Vehicles Built From: 02/2004
Seat Base (76.70.08) - Vehicles Built Up To: 01/2004
Seat Control Switch (86.75.23)

GETtheMANUALS.org

501-11: Glass, Frames and Mechanisms
- Specification
- Description and Operation
  - Glass, Frames and Mechanisms
- Diagnosis and Testing
  - Glass, Frames and Mechanisms
- General Procedures
  - Door Window Motor Initialization
- Removal and Installation
  - Front Door Window Glass (76.31.01)
  - Front Door Window Regulator and Motor (76.31.45)
  - Rear Door Fixed Window Glass
  - Rear Door Window Glass (76.31.02)
  - Rear Door Window Regulator and Motor (86.25.09)
  - Rear Window Glass (76.81.11)
  - Window Control Switch (86.25.08)
  - Windshield Glass Using Cheese Wire (76.81.40)
  - Windshield Glass Using Cutting Tool (76.81.01)

501-12: Instrument Panel and Console
- Specification
- Description and Operation
  - Instrument Panel
- Removal and Installation
  - Floor Console (76.25.01)
  - Glove Compartment (76.52.03)
  - Instrument Panel (76.46.01)
  - Instrument Panel Console (88.20.34)
  - Overhead Console (76.13.69)
  - Overhead Console Switch Moulding

501-14: Handles, Locks, Latches and Entry Systems
- Specification
- Description and Operation
  - Handles, Locks, Latches and Entry Systems
- Diagnosis and Testing
  - Locks, Latches and Entry Systems

GETtheMANUALS.org

General Procedures
Remote Transmitter Programming
Removal and Installation
Exterior Front Door Handle (76.58.01)
Exterior Rear Door Handle (76.58.02)
Front Door Lock Actuator (76.37.74)
Front Door Lock Cylinder (76.37.71)
Interior Door Handle (76.37.31)
Luggage Compartment Lid Latch Actuator (76.19.25) - Vehicles Built From: 02/2004
Luggage Compartment Lid Latch Actuator (76.19.25) - Vehicles Built Up To: 01/2004
Luggage Compartment Lid Lock Cylinder (76.19.19) - Vehicles Built From: 02/2004
Luggage Compartment Lid Lock Cylinder (76.19.19) - Vehicles Built Up To: 01/2004
Rear Door Lock Actuator (76.37.09)

501-16: Wipers and Washers
Specification
Description and Operation
Wipers and Washers
Diagnosis and Testing
Wipers and Washers
Removal and Installation
Headlamp Washer Jet (84.20.08)
Headlamp Washer Pump (84.20.21)
Rain Sensor (84.12.10) (86.56.62)
Rain Sensor Module (86.56.60)
Windshield Washer Pump (84.10.21)
Windshield Washer Reservoir (84.10.01) (84.10.03)
Wiper Mounting Arm and Pivot Shaft (84.15.24)
Wiper Pivot Arm (84.15.03) - Vehicles Built From: 02/2004
Wiper Pivot Arm (84.15.03) - Vehicles Built Up To: 01/2004

501-17: Roof Opening Panel
Specification
Description and Operation
Roof Opening Panel
Diagnosis and Testing
Roof Opening Panel

GETtheMANUALS.org

General Procedures
Motor Synchronization (76.82.48)
Roof Opening Panel Alignment
Removal and Installation
Air Deflector (76.82.07)
Roof Opening Panel Frame (76.82.01)
Roof Opening Panel Front Drain Hose (76.82.21)
Roof Opening Panel Glass (76.82.05)
Roof Opening Panel Motor (86.76.01)
Roof Opening Panel Rear Drain Hose (76.82.22)
Roof Opening Panel Shield (76.82.06)
Roof Opening Panel Weatherstrip (76.82.15)
Trough Assembly (76.82.58)

501-19: Bumpers
Specification
Description and Operation
Bumpers
Removal and Installation
Front Bumper Cover (76.22.78)
Front Bumper Cover Insert (76.22.73) - Vehicles Built From: 02/2004
Front Bumper Cover Insert (76.22.73) - Vehicles Built Up To: 01/2004
Rear Bumper (76.22.27) (76.22.52)
Rear Bumper Cover (76.22.74) (76.22.77)
Rear Bumper Cover Insert (76.22.75) - Vehicles Built From: 02/2004

501-20A: Safety Belt System
Specification
Description and Operation
Safety Belt System
Diagnosis and Testing
Safety Belt System
Removal and Installation
Front Safety Belt Buckle (76.73.49)
Front Safety Belt Retractor (76.73.10)
Front Safety Belt Shoulder Height Adjuster (76.73.12)
Rear Center Safety Belt Retractor (76.73.20)

GETtheMANUALS.org

Rear Safety Belt Buckle (76.73.50)
Rear Safety Belt Retractor (76.73.18)

501-20B: Supplemental Restraint System
Specification
Description and Operation
Air Bag Supplemental Restraint System (SRS)
Diagnosis and Testing
Air Bag Supplemental Restraint System (SRS)
General Procedures
Air Bag Disposal
Removal and Installation
B-Pillar Side Impact Sensor (76.73.68)
Clockspring (86.65.92)
C-Pillar Side Impact Sensor (76.73.69)
Crash Sensor (76.73.55)
Driver Air Bag Module (76.73.39)
Front Passenger Seat Occupant Classification Sensor (76.73.60)
Passenger Air Bag Deactivation (PAD) Indicator (76.73.58)
Passenger Air Bag Module (76.73.37)
Restraints Control Module (RCM) (76.73.48)
Seat Position Sensor (76.73.62)
Side Air Bag Module (76.73.47)
Side Air Curtain Module (76.73.64)

502: Frame and Mounting
502-00: Uni-Body, Subframe and Mounting System
Specification
Description and Operation
Frame Assembly
Removal and Installation
Front Subframe (76.10.05) - 2.5L NA V6 - AJV6/3.0L NA V6 - AJ27
Front Subframe (76.10.05) - 2.7L V6 - TdV6
Front Subframe (76.10.05) - V8 4.2L Petrol/V8 S/C 4.2L Petrol
Rear Subframe (64.25.01)
Rear Subframe Front Bushing (64.25.34)
Rear Subframe Rear Bushing (64.25.36)

GETtheMANUALS.org

# General Information - About This Manual

Description and Operation

## Notes, Cautions and Warnings

Throughout this manual, important information is highlighted by the use of notes, cautions and warnings. NOTES give additional information on a topic or procedure, CAUTIONS are given to prevent damage to the vehicle, and WARNINGS are given to prevent personal injury.

GETtheMANUALS.org

# General Information - Application and Use of Specifications

Description and Operation

## Torque Specifications

Torque specifications are shown in the torque specifications chart located at the front of the relevant section.

GETtheMANUALS.org

# General Information - General Service Information

Description and Operation

## Repairs and Replacements

When service parts are required, it is essential that only genuine Jaguar/Daimler replacements are used.

Attention is drawn to the following points concerning repairs and the fitting of replacement parts and accessories:

- Safety features embodied in the vehicle may be impaired if other than genuine parts are fitted. In certain territories, legislation prohibits the fitting of parts which are not produced to the vehicle manufacturer's specification.
- Torque wrench setting figures given in this manual must be strictly adhered to. Locking devices, where specified, must be fitted. If the efficiency of a locking device is impaired during removal it must be renewed.
- Owners purchasing accessories while travelling abroad should make sure that the accessory and its fitted location on the vehicle conform to mandatory requirements existing in their country of origin.
- The vehicle warranty may be invalidated by the fitting of other than genuine Jaguar/Daimler parts. All Jaguar/Daimler replacements have the full backing of the factory warranty.
- Jaguar/Daimler dealers are obliged to supply only genuine service parts.

## Vehicle Specifications

Purchasers are advised that the specification details set out in this manual apply to a range of vehicles and not to any specific one. For the specification of a particular vehicle, purchasers should consult their dealer.

The Manufacturer reserves the right to vary the specifications, with or without notice, and at such times and in such manner as the Manufacturer thinks fit. Major as well as minor changes may be involved, in accordance with the Manufacturer's policy of continuous improvement.

Whilst every effort is made to make sure the accuracy of the particulars contained in this manual, neither the Manufacturer nor the Dealer, by whom the manual is supplied, shall in any circumstances be held liable for any inaccuracy or the consequences thereof.

## Service Repair Operation Numbering

A master index of numbered operations has been compiled for universal application to all vehicles manufactured by Jaguar Cars Ltd.

Each operation is allocated a number from the master index and cross-refers with an identical number in the Repair Operation Times schedule. The number consists of six digits arranged in three pairs.

Each maintenance procedure in this manual is described in the sequence necessary to complete the operation in the minimum time, as specified in the Repair Operation Times schedule.

## References to Bank-1 and Bank-2

References to Bank-1 and Bank-2 are made with regard to the engine. When viewed from the flywheel the right-hand bank will be Bank-1 and the left-hand bank will be Bank-2.

## Special Tools

Any special tools and equipment required to perform a maintenance procedure, are shown at the beginning of each procedure. When possible, illustrations are given to assist in identifying the tool needed.

## Disconnecting/Connecting the Battery

Always stop the engine before disconnecting the battery negative lead and make sure the battery positive lead is isolated i.e. wrapped in a suitable cloth.

WARNING: Radio code saving devices must not be used when conducting work on Air Bag or Fuel systems. It must be noted that, when using these devices, the vehicle electrical system is still live albeit with a reduced current flow.

• NOTE: Before disconnecting the battery make sure that the radio receiver/cassette player/mini disc player and compact disc player keycodes are known and, that no data is required from the engine control module (ECM) as battery disconnection will erase any fault codes and idle/drive values held in the Keep Alive Memory (KAM). It is not necessary to disconnect or remove electronic control modules.

Always disconnect the battery before commencing repair operations which require:

- The vehicle to be jacked up
- Work on the engine
- Work underneath the vehicle
- Arc welding

Alternatively a Radio Code Saver may be used. With the battery disconnected, a Radio Code Saver will allow sufficient current to pass to maintain the radio receiver/cassette player/mini disc player and compact disc player memory, operate the clock and supply the door operated interior lights while isolating the battery in the event of a short circuit.

## Reconnecting the Battery

WARNING: If the battery has been on bench charge the cells may be giving off explosive hydrogen gas. Avoid creating sparks, and if in doubt cover the vent plugs or covers with a damp cloth.

Always make sure that all electrical systems are switched OFF before reconnecting the battery to avoid causing sparks or damage to sensitive electrical equipment.

Always reconnect the battery positive lead first and the negative last, ensuring that there is a good electrical contact and the battery terminals are secure.

GETtheMANUALS.org

Restart the clock (where fitted) and set it to the correct time.

Re - enter the radio receiver/cassette player/mini disc player and compact disc player keycodes and preset' frequencies, if known.

Following reconnection of the battery, the engine should be allowed to idle until it has reached normal operating temperature as the stored idle and drive values contained within the ECM have been lost. Allow the vehicle to idle for a further three minutes. Drive the vehicle at constant speeds of approximately 48 km/h (30 mph), 64 km/h (40 mph), 80 km/h (50 mph), 96 km/h (60 mph) and 112 km/h (70 mph) for three minutes each. This may cause a driveability concern if the procedure is not carried out. This will allow the ECM to relearn idle values.

## Connecting a Slave Battery Using Jump Leads

WARNING: If the slave battery has recently been charged and is gassing, cover the vent plugs or covers with a damp cloth to reduce the risk of explosion should arcing occur when connecting the jump leads.

• CAUTIONS:

A flat battery condition may have been caused by an electrical short circuit. If this condition exists there will be an apparently live circuit on the vehicle even when all normal circuits are switched off. This can cause arcing when the jump leads are connected.

Whilst it is not recommended that the vehicle is jump started, it is recognized that this may occasionally be the only practical way to mobilize a vehicle. In such an instance the discharged battery must be recharged immediately after jump starting to avoid permanent damage.

- Always make sure that the jump leads are adequate for the task. Heavy duty cables must be used.
- Always make sure that the slave battery is of the same voltage as the vehicle battery. The batteries must be connected in parallel.
- Always make sure that switchable electric circuits are switched off before connecting jump leads. This reduces the risk of sparks occurring when the final connection is made.

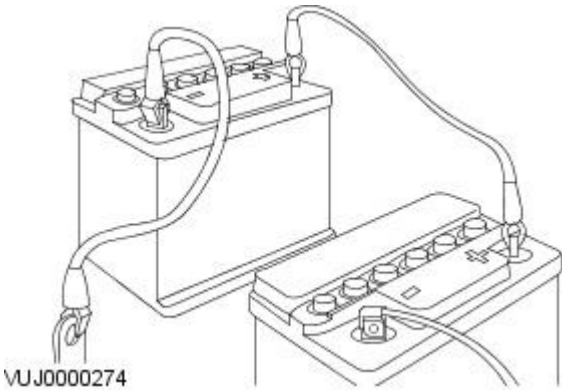


WARNING: Make sure that the ends of the jump leads do not touch each other or ground against the vehicle body at any time while the leads are attached to the battery. A fully charged battery, if shorted through jump leads, can discharge at a rate well above 1000 amps causing violent arcing and very rapid heating of the jump leads and terminals, and can even cause the battery to explode.

Always connect the jump leads in the following sequence.

- Slave battery positive first then vehicle battery positive.
- Slave battery negative next and then vehicle ground at least, 300 mm (12 in) from the battery terminal e.g. engine lifting bracket.

Always reduce the engine speed to idle before disconnecting the jump leads.

Before removing the jump leads from the vehicle that had the discharged battery, switch on the heater blower (high) or the heated rear screen, to reduce the voltage peak when the leads are removed.

Always disconnect the jump leads in the reverse order to the connecting sequence and take great care not to short the ends of the leads.

Do not rely on the alternator to restore a discharged battery. For an alternator to recharge a battery, it would take in excess of 8 hours continuous driving with no additional loads placed on the battery.

## Component Cleaning

To prevent ingress of dirt, accumulations of loose dirt and greasy deposits should be removed before disconnecting or dismantling components or assemblies.

Components should be thoroughly cleaned before inspection prior to reassembly.

## Cleaning Methods:

- Dry Cleaning
- Removal of loose dirt with soft or wire brushes.
- Scraping dirt off with a piece of metal or wood.
- Wiping off with a rag.

CAUTION: Compressed air is sometimes wet so use with caution, especially on hydraulic systems.

- Blowing dirt off with compressed air. (Eye protection should be worn when using this method).
- Removal of dry dust using vacuum equipment. This method should always be used to remove friction lining material dust (asbestos particles).
- Steam Cleaning

## Calibration of Essential Measuring Equipment

GETtheMANUALS.org

WARNING: Failure to comply may result in personal injury or damage to components.

It is of fundamental importance that certain essential equipment e.g. torque wrenches, multimeters, exhaust gas analysers, rolling roads etc., are regularly calibrated in accordance with the manufacturers instructions.

## Use of Control Modules

Control modules may only be used on the vehicle to which they were originally fitted. Do not attempt to use or test a control module on any other vehicle.

## Functional Test

On completion of a maintenance procedure, a thorough test should be carried out, to make sure that the relevant vehicle systems are working correctly.

## Preparation

Before disassembly, clean the surrounding area as thoroughly as possible. When components have been removed, blank off any exposed openings using grease-proof paper and masking tape. Immediately seal fuel, oil and hydraulic lines when separated, using plastic caps or plugs, to prevent loss of fluid and the entry of dirt. Close the open ends of oilways, exposed by component removal, with tapered hardwood plugs or readily visible plastic plugs. Immediately a component is removed, place it in a suitable container; use a separate container for each component and its associated parts. Before dismantling a component, clean it thoroughly with a recommended cleaning agent; check that the agent will not damage any of the materials within the component. Clean the bench and obtain marking materials, labels, containers and locking wire before dismantling a component.

## Dismantling

Observe scrupulous cleanliness when dismantling components, particularly when parts of the brake, fuel or hydraulic systems are being worked on. A particle of dirt or a fragment of cloth could cause a dangerous malfunction if trapped in these systems. Clean all tapped holes, crevices, oilways and fluid passages with compressed air. Do not permit compressed air to enter an open wound. Always use eye protection when using compressed air.

Make sure that any O-rings used for sealing are correctly refitted or renewed if disturbed. Mark mating parts to make sure that they are replaced as dismantled. Whenever possible use marking materials which avoid the possibilities of causing distortion or the initiation of cracks, which could occur if a center punch or scriber were used. Wire together mating parts where necessary to prevent accidental interchange (e.g roller bearing components). Tie labels on to all parts to be renewed and to parts requiring further inspection before being passed for reassembly. Place labelled parts and other parts for rebuild in separate containers. Do not discard a part which is due for renewal until it has been compared with the new part, to make sure that the correct part has been obtained.

## Inspection

Before inspecting a component for wear or performing a dimensional check, make sure that it is absolutely clean; a slight smear of grease can conceal an incipient failure. When a component is to be checked dimensionally against figures quoted for it, use the correct equipment (surface plates, micrometers, dial gauges etc.) in serviceable condition. The use of makeshift equipment can be dangerous. Reject a component if its dimensions are outside the limits quoted, or if damage is apparent. A part may be refitted if its critical dimension is exactly to the limit size and it is otherwise satisfactory. Use Plastigauge 12 Type PG-1 for checking bearing surface clearance, e.g. big end bearing shell to crank journal. Instructions for the use of Plastigauge and a scale giving bearing clearances in steps of 0,0025 mm (0.0001 in) are supplied with the package.

## On-Board Diagnostics (OBD)

This vehicle uses programmed electronic control systems to provide engine management and emission regulation, automatic transmission operation and anti-lock braking control. These control systems are integral with the On-Board Diagnostics (OBD) facility which is used in conjunction with either the Jaguar approved diagnostic system or the more restricted scan tools.

The OBD information in this manual provides diagnostic and rectification procedures for emission related electrical and mechanical systems. The information is intended to facilitate fault diagnosis and the subsequent rectification of the vehicle without recourse to the Jaguar approved diagnostic system.

The manual covers the following OBD topics:

- General Information
- Engine Management System
- Automatic Transmission
- Anti-lock Braking System

Each section comprises one or more of the following sub-sections as required.

The Description and Operation sub-section includes:

- A general illustration and parts list to help the identification of the particular system or component.
- A brief description of the system operating characteristics and monitoring procedure accompanied by a component illustration.
- Additional information, where appropriate, is provided in the form of component calibrations, characteristics and cross sectional views.
- A localized circuit diagram is included to provide circuit identification, connectors, splices, fuses, wire gauge and colors. See Circuit Diagrams.

The Diagnosis and Testing sub-section is dedicated to fault analysis and rectification, and includes:

- Recommended special tools.
- Symptom chart; a chart containing all relevant Diagnostic Trouble Codes (DTC), their possible causes and an indication of the appropriate test.
- Specific pinpoint test(s), designed so that fault diagnosis can be carried out in a logical and efficient manner.

The Removal and Installation sub-section covers:

- Removal procedure(s), formatted in the recommended sequence.
- Illustrated guide to the use of special tools.
- Illustrations to support the relevant text.
- Installation procedure as above and including special recommendations for processes, lubricants and tightening torques.

## Circuit Diagrams

GETtheMANUALS.org

To understand the relationship between the vehicle electrical system and the system circuit diagrams, Refer to the Electrical Guide.

In the interest of clarity, single lines may represent multiple wires. Refer to the color code (1st alpha) followed by the wire reference (numeric/alpha/numeric) to trace origin and destination.

e.g. BW 647B002. BW (black with white trace) 647 (wire reference) B002 (stage from origin).

## Glossary of Terms

This glossary of terms is intended to cover mainly emissions-related (to SAE J 1930) terminology, and other abbreviations that may be used in this manual.

The required term may be looked-up in the left-hand column, and subsequent columns give the standard acronym, unit or abbreviation, and definition.

| Term(s) | Acronym / Unit / Abbreviation | Definition |
|---|---|---|
| Accelerator Pedal | AP | |
| Accelerator Pedal Position Sensor | APP | Is a multitrack sensor which inputs the drivers demand into the engine control module (ECM) |
| After Bottom Dead Center | ABDC | Event occurring after BDC |
| After Top Dead Center | ATDC | Event occurring after TDC |
| Airbag / Supplementary Restraint System | Airbag, SRS | Airbag restraint system for driver and front seat passenger |
| Air Cleaner | ACL | |
| Air Conditioning | A/C | |
| Air Conditioning Control Module | A/CCM | Module controlling air conditioning, heating and ventilation |
| Air Conditioning Signal | ACS | Air conditioning compressor clutch operation is signalled to the ECM which induces idle speed corrections to compensate for engine load changes |
| Alternating current | ac | |
| Air Fuel Ratio | AFR | Nominally 14.7 parts air to one part fuel |
| Ampere | A | SI unit of current |
| Ampere hour | Ah | |
| ABS Control Module | ABS CM | System which prevents wheel lock-up under braking by sensing lack of rotation of a wheel(s) and diverting fluid pressure away from it (them) |
| ABS / Traction Control Control Module | ABS/TCCM | System which prevents wheel lock-up under braking by sensing lack of rotation of a wheel(s) and diverting fluid pressure away from it (them) |
| Atmosphere | atm | Unit of pressure (1.01325 bar) |
| Barometric Absolute Pressure Sensor | BARO Sensor | Sensor measuring the pressure of surrounding air at any given temperature and altitude |
| Battery positive voltage | B+ | The positive voltage from a battery or any circuit connected directly to it |
| Before Bottom Dead Center | BBDC | Event occurring before BDC |
| Before Top Dead Center | BTDC | Event (usually ignition) occurring before TDC |
| Blower | BLR | Device which supplies a current of air at moderate pressure, e.g. heater or A/C blower |
| Body Processor Module | BPM | Control module for body electrical systems, e.g. interior lamps, windshield wash / wipe control |
| Bottom Dead Center | BDC | Lowest point of piston travel in a reciprocating engine |
| Brake horsepower | BHP | Effective horsepower developed by an engine or motor, as measured by a brake applied to its output shaft |
| Brake Mean Effective Pressure | BMEP | The part of the effective pressure developed in a cylinder that would result in a cylinder output equal to the bhp of the engine |
| Brake On/Off | BOO | Indicates the position of the brake pedal |
| British Standard | BS | Standard specification issued by the British Standards Institution |
| British Standard Automotive | BSau | |
| Bus | Topology of a communication network | |
| Bypass Air | BPA | Mechanical control of throttle bypass air |
| Camshaft Position Sensor | CMP Sensor | Indicates camshaft position |
| Canadian Motor Vehicle Safety Standard | CMVSS | |
| Canister Purge | CANP | Controls purging of the EVAP canister |
| Carbon dioxide | CO2 | Colorless gas with a density of approximately 1.5 times that of air |
| Carbon monoxide | CO | Poisonous gas produced as the result of incomplete combustion |
| Case Ground | CSE GND | Control module casing ground |
| Catalytic converter | | In-line exhaust system device used to reduce the level of engine exhaust emissions |
| Celsius | C | SI term for the Centigrade scale, with freezing point at zero and boiling point at 100 degrees |
| Central Processor Unit | CPU | The section of a computer that contains the arithmetic, logic and control circuits. It performs arithmetic operations, controls instruction processing, and provides timing signals and other housekeeping operations |
| Cylinder Head Temperature Sensor | CHT Sensor | A sensor for measuring the temperature of the cylinder head |
| Closed Loop | CL | |
| Closed Loop System | CL System | Control system with one or more feedback loops |
| Column/Mirror Control Module | C/MCM | A self-contained group of electrical /electronic components, designed as a single replaceable unit, and controlling one or more processes |
| Controller Area Network | CAN | A communication system which allows control modules to be linked together. |
| Crankshaft Position Sensor | CKP Sensor | Generates crankshaft position information in conjunction with the CKPTR (also generates speed information in certain applications) |
| Crankcase Ventilation System | CV | System which scavenges camshaft cover and crankcase emissions and feeds them into the inlet manifold |
| Cubic centimeter | $cm^3$ | |
| Curb weight | | Weight of vehicle with fuel, lubricants and coolant, but excluding driver, passengers or payload |
| Data Link Connector | DLC | Connector providing access and/or control of the vehicle information, operating conditions, and diagnostic information |

GETtheMANUALS.org

| Term(s) | Acronym / Unit / Abbreviation | Definition |
|---|---|---|
| Data Output Line | DOL | Circuit that sends certain information from the ECM to the instrument cluster |
| Degree | deg, ° | Angle or temperature |
| Department of Transportation (US) | DOT | Which is a fibre optic ring network, can be diagnosed through the SCP network, and with the optical bus tester. |
| Deutsche Institut fur Normung | DIN | German standards regulation body |
| Diagnostic Module | DM | Supplemental Restraint System (non -controlling) module for diagnostics overview |
| Diagnostic Test Mode | DTM | A level of capability in an OBD system. May include different functional states to observe signals, a base level to read DTCs, a monitor level which includes information on signal levels, bi-directional control with on/off board aids, and the ability to interface with remote diagnosis |
| Diagnostic Trouble Code | DTC | An alpha/numeric identifier for a fault condition identified by the On-Board Diagnostic (OBD) system |
| Differential pressure | | Pressure difference between two regions e.g. between intake manifold and atmospheric pressures |
| Differential Pressure Feedback EGR | DPFE | An EGR system that monitors differential EGR pressure across a remote orifice to control EGR flow |
| Direct current | dc | Current which flows in one direction only, though it may have appreciable pulsations in its magnitude |
| Domestic Data Bus | D2B | |
| Exhaust Gas Recirculation Temperature Sensor | EGRT | Sensing EGR function based on temperature change |
| Engine Management System | EMS | The engine management system conditions and reads inputs, supplies processing capability, and provides output drivers to control actuators as directed by software and calibration |
| Engine Oil Pressure | EOP | |
| EGR Vacuum Regulator | EVR | Controls EGR flow by changing vacuum to the EGR valve |
| EGR Valve Position | EVP | An EGR system that directly monitors EGR valve position to control EGR flow |
| Electrically Erasable Programmable Read-Only Memory | EEPROM | |
| Electrically Programmable Read-Only memory | EPROM | |
| Electronic Secondary Air Injection | EAIR | A pump-driven system for providing secondary air using an electric air pump |
| Engine Control Module | ECM | |
| Engine Coolant Level | ECL | |
| Engine Coolant Temperature | ECT | |
| ECT Sensor | ECTS | Thermistor which provides engine coolant temperature signal to the ECM to trigger enrichment circuits which increase injector 'on' time for cold start and warm-up |
| Engine speed | RPM | |
| Environmental Protection Agency | EPA | |
| Evaporative Emission | EVAP | System designed to prevent fuel vapor from escaping into the atmosphere. Typically includes a charcoal filled canister to absorb fuel vapor |
| Evaporative Emission Control Valve | EVAPP | |
| Exhaust Gas Recirculation | EGR | System which reduces NOx emissions by adding exhaust gases to the incoming fuel/air charge |
| Exhaust Gas Recirculation Solenoid Vacuum Valve | EGRS | |
| Exhaust Gas Recirculation Temperature Sensor | EGRT Sensor | |
| Exhaust Gas Recirculation Valve | EGR Valve | |
| Fan Control | FC | Engine cooling fan control |
| Federal Motor Vehicle Safety Standard (US) | FMVSS | |
| Figure | Fig. | Illustration reference |
| Flash Electrically Erasable Programmable Read-Only Memory | FEEPROM | |
| Flash Erasable Programmable Read-Only Memory | FEPROM | |
| Flywheel Sensor | CKFS | Sensor mounted so as to be triggered by each flywheel ring gear tooth to give an engine speed signal |
| Fuel Injection | FI | Solenoid operated devices that spray a metered quantity of fuel into the inlet ports |
| Fuel Pressure Regulator Control | FPRC | Controls fuel pressure regulator; used primarily to give extra fuel at cold start-up |
| Fuel Pump | FP | Pumps fuel from the fuel tank to the fuel injection system |
| Fuel Pump Monitor | FP Module | Monitors operation of fuel pump |
| Fuel Pump Relay | FP Relay | Relay which controls electrical current to fuel pump |
| Fuel rich/lean | | Qualitative evaluation of air/fuel ratio based on a ratio known as stoichiometry,or 14.7:1 (Lambda) |
| Generic Electronic Module | GEM | |
| Generator | GEN | Rotating machine which converts mechanical energy into electrical energy |
| Gramme centimeter | gcm | |
| Gramme (force) | gf | |
| Gramme (mass) | g | |
| Ground | GND | Electrical conductor used as a common return for an electrical circuit or circuits, and with a relative zero potential |
| Hard fault | | A fault currently present in the system |
| Headlamp | HL | |

GETtheMANUALS.org

| Term(s) | Acronym / Unit / Abbreviation | Definition |
|---|---|---|
| Heated Oxygen Sensor | HO2S | Electrically heated oxygen sensor which induces fueling corrections |
| Hertz (frequency) | Hz | Frequency, one cycle per second |
| High Mounted Stoplamp | HMSL | |
| High tension | HT | |
| Hour | hour | |
| Hydrocarbon | HC | |
| Idle Air Control | IAC | Stepper motor driven device which varies the volume of air by-passing the throttle to maintain the programmed idle speed |
| Ignition amplifier | IA | Device which amplifies the ignition system output |
| Ignition ground | IGN GND | |
| Injection Pressure Sensor | IPS | |
| Inertia Fuel Shut-off | IFS | An inertia system that shuts off the fuel supply when activated by pre-determined force limits brought about by (e.g.) collision |
| Inertia Fuel Shut-off Switch | IFS Switch | Shuts down fuel and ignition systems in the event of a vehicle impact |
| Intake air | | Air drawn through a cleaner and distributed to each cylinder for use in combustion |
| Intake Air Temperature | IAT | Temperature of intake air |
| Intake Air Temperature Sensor | IAT Sensor | Device used to measure IAT |
| Intake Air Temperature Sensor Ignition | IAT Sensor Ignition | Thermistor which signals the ECM to retard the ignition timing in response to high inlet air temperatures |
| Intake Air Temperature Sensor Injection | IAT Sensor Injection | Thermistor which inputs air density information to the ECM |
| Internal diameter | i.dia | |
| International Standards Organisation | ISO | |
| Kilogramme (mass) | kg | |
| Kilogramme (force) | kgf | |
| Kilogramme force per square centimeter | $kgf/cm^2$ | |
| Kilometer | km | |
| Kilometer per hour | km/h | |
| Kilopascal | kPa | |
| Kilovolt | kV | |
| Knock Sensor | KS | Sensor which detects the onset of detonation, and signals the ECM to retard the ignition |
| Left-hand | LH | |
| Left-hand drive vehicle | LHD | |
| Left-hand thread | LHthd | |
| Liquid Crystal Display | LCD | Optical digital display system, applied voltage to which varies the way the crystals reflect light, thereby modifying the display |
| Litre | L | |
| Low Tension | LT | Primary circuit of the ignition system, linking the battery to the primary winding in the ignition coil |
| Malfunction Indicator Lamp | MIL | A required on-board indicator to alert the driver of an emission related malfunction |
| Manifold Absolute Pressure | MAP | Absolute pressure of the intake manifold air |
| Manifold Absolute Pressure Sensor | MAP Sensor | Sensor located in the ECM and ported to the intake manifold |
| Manifold Surface Temperature | MST | |
| Mass Air Flow | MAF | System which provides information on the mass flow rate of the intake air to the engine |
| Mass Air Flow Sensor | MAF Sensor | Hot-wire sensor which monitors air flow into the intake manifold for fueling and ignition control |
| Maximum | max. | |
| Meter (measurement) | m | |
| Metric (screw thread, e.g. M8) | M | |
| Microfarad | MFD | Unit of electrical capacitance, one millionth of a farad |
| Millimeter | mm | |
| Millimeter of mercury | mmHg | |
| Millisecond | ms | |
| Minimum | min. | |
| Minute | minute | |
| Model year | MY | |
| Motorized In-Car Aspirator | MIA | Device which constantly samples cabin temperature by passing air over a sensor, and communicates with the A/CCM to modify A/C system performance to suit |
| Multi Protocol Adapter | MPA | An interpreter for the various data languages present on a vehicle |
| National Institute of Occupational Safety and Health (US) | NIOSH | |
| Newton | N | SI unit of force. 1 N = 0.2248 pounds force |
| Newton Meter | Nm | SI unit of torque. Must not be confused with nm (nanometer) |
| Nox | | Compounds of nitrogen and oxygen formed at high temperatures. Major source of exhaust-gas air pollution |
| Non-Volatile Random Access Memory | NVRAM | RAM which retains memory even if power supply is interrupted |
| Normally aspirated | N/A | Fueling system using intake air at atmospheric pressure; not supercharged or turbocharged |
| Normally Closed | NC | |
| Normally Open | NO | |
| North American Specification | NAS | Vehicles for sale in the USA and Canadian markets |
| Number | No. | |
| Occupational Safety and Health Administration (US) | OSHA | |

GETtheMANUALS.org

| Term(s) | Acronym / Unit / Abbreviation | Definition |
|---|---|---|
| On-Board Diagnostic | OBD | A system that monitors some or all computer input and output control signals. Signal(s) outside the pre-determined limits imply a fault in the system or a related system |
| Original Equipment Manufacturer | OEM | |
| Outside Diameter | o. dia | |
| Oxides of nitrogen | Nox | |
| Oxygen Sensor | O2S | A sensor which detects oxygen content in the exhaust gases |
| Parameter Identification | PID | An index number referring to a parameter within a module without knowledge of its storage location |
| Park Neutral Position | PNP | |
| Park Neutral Position Switch | PNP Switch | Indicates the selected non-drive modes of the (automatic) transmission |
| Part number | part no. | |
| Pulse Width Modulated | PWM | |
| Programmable Electronic Control Units System | PECUS | Process whereby a common ECM is programmed on the production line to suit the market requirements of a particular vehicle |
| Programmable Read-only Memory | PROM | ROM with some provision for setting the stored data after manufacture |
| Random Access Memory | RAM | Fast access memory store which is accessible for entry or extraction of data |
| Read-Only Memory | ROM | Fast access memory in which data is fixed and may not be changed |
| Reservoir | RES | Container, usually for oils, coolants or hydraulic fluids |
| Rest Of The World | ROW | |
| Return | RTN | A dedicated sensor ground circuit |
| Revolutions Per Minute | RPM | Shaft speed of a device, usually an engine or motor |
| Right-hand | RH | |
| Right-hand drive | RHD | |
| Scan Tool | ST | Device that interfaces with and communicates information on a data link |
| Seat Control Module | SCM | Module controlling the seat motor systems (not electric raise/lower-only seats) |
| Secondary Air | | Air provided to the exhaust system |
| Secondary Air | AIR | System used for a period of time each time the engine is started, unless certain temperature criteria are met. Pumps air directly into the exhaust system which generates extra heat and reduces the time taken for the catalytic converters to reach operating temperature |
| Secondary Air Injection Bypass | AIR Bypass | Vents secondary air to atmosphere |
| Secondary Air Injection Check Valve | AIR Check Valve | Valve which prevents back-flow of exhaust gas to the AIR system when the system is inoperative |
| Secondary Air Injection Diverter | AIR Diverter | Diverts secondary air to either the catalyst or exhaust manifold |
| Secondary Air Injection Magnetic Clutch | AIR Clutch | Clutch mounted on the AIRP drive shaft |
| Secondary Air Injection Pump | AIR Pump | Mechanically driven rotary vane pump, driven through the AIRPC |
| Secondary Air Injection Relay | AIR Relay | Controls the injection of air into the exhaust system |
| Secondary Air Injection Switching Valve | AIR Switching Valve | Vacuum operated valve backing-up the AIRC |
| Security & Locking Control Module | SLCM | Module controlling the vehicle's security and closure-locking functions |
| Sensor | S | Generic name for a device that senses either the absolute value or a change in a physical quantity such as temperature, pressure or flow rate, and converts that change into an electrical quantity signal |
| Service Repair Operation (number) | SRO | Number generated by Jaguar Methods & Techniques system which relates to the time allowed to complete a repair operation. Further information on the system can be found in the separate Jaguar Publications (for each model range) entitled 'Repair Operation Times' |
| Shift Solenoid | SS | Controls shifting in an automatic transmission |
| Signal return | SIG RTN | |
| Sliding Roof Control Module | SRCM | |
| Society of Automotive Engineers | SAE | |
| Speed Control Control Module | SCCM | Module controlling Speed Control System |
| Square centimeter | $cm^2$ | |
| Standard | std | |
| Standard Corporate Protocol | SCP | A high-speed, serial communications system linking all body system control modules. Control messages and data are passed between modules at up to 786 messages per second |
| Supercharger | SC | An intake system which utilizes a supercharger (mechanically driven device that pressurizes intake air, thereby increasing density of charge air and the consequent power output from a given displacement) |
| Supercharger Bypass | SCB | |
| Tachometer | TACH | A circuit that provides input for an electronic tachometer display |
| Thermal Vacuum Valve | TVV | Controls vacuum levels or routing based on temperature |
| Throttle Body | TB | Device containing the throttle |
| Throttle Position | TP | |
| Throttle Position Sensor | TP Sensor | Interprets throttle position and movement to identify idle, acceleration and full-power demands |
| Throttle Manifold Absolute Pressure Sensor | TMAP | Combines the inlet air temperature and manifold pressure sensor in one component |
| Top Dead Center | TDC | |
| Torque Converter Clutch | TCC | |
| Transmission Control Module | TCM | Controls the shifting pattern of the (automatic) transmission |
| Transmission Control Switch | TCS | Modifies the operation of electronically controlled transmissions |

GETtheMANUALS.org

| Term(s) | Acronym / Unit / Abbreviation | Definition |
|---|---|---|
| Transmission Oil Temperature | TOT | Indicates temperature of transmission fluid |
| Transmission Range | TR | The range in which the transmission is operating |
| Turbine Shaft Speed | TSS | Indicates rotational speed of transmission output shaft or turbine shaft |
| Vacuum Solenoid Valve | VSV | Vacuum operated valve used in the speed control system |
| Vacuum Solenoid Valve (atm) | VSV(VA) | Vacuum atmospheric valve used in the speed control system |
| Vacuum Solenoid Valve (rel) | VSV(VR) | Vacuum release valve used in the speed control system |
| Vacuum Solenoid Valve (vac) | VSV(VV) | Vacuum valve used in the speed control system |
| Variable Valve Timing | VVT | A system by which the relationship of the crankshaft and camshaft may be altered during engine running |
| Vehicle Battery Adapter | VBA | Provides electrical power to the Jaguar approved diagnostic system and supplies a battery reference level |
| Vehicle Control Monitor | VCM | Instrument panel display which warns of faults |
| Vehicle Emission Control Information Label | VECI Label | |
| Vehicle Identification Number | VIN | Number assigned to the vehicle by the manufacturer, primarily for licensing and identification purposes |
| Vehicle Interface Adapter | VIA | Extends the Jaguar approved diagnostic system capability and provides a parallel interface to vehicle harnesses and ECMs |
| Vehicle Speed Sensor | VSS | Sensor which provides vehicle speed information |
| Viscosity Index | VI | |
| Voltage Regulator | VR | Device which regulates the variable output voltage of a generator |
| Watt | W | SI unit of power (1 hp = 745.7 watts) |
| Wide Open Throttle | WOT | Full throttle position |

GETtheMANUALS.org

# General Information - Health and Safety Precautions

Description and Operation

Prolonged and repeated contact with mineral oil will result in the removal of natural oils from the skin, leading to dryness, irritation and dermatitis. In addition, used engine oil contains potentially harmful contaminants which may cause skin cancer. Washing facilities and adequate means of skin protection should be provided.

Observe these recommendations:

- Wear protective clothing, including impervious gloves where practicable.
- Do not put oily rags in pockets. Avoid contaminating clothes, particularly underwear, with oil.
- Overalls must be cleaned regularly. Discard oil impregnated clothing and footwear which cannot be washed or cleaned.
- First Aid treatment should be obtained immediately for open cuts or wounds.
- Use barrier creams, applying before each work period, to enable easier removal of dirty oil and grease from the skin.
- Wash with soap and water to make sure that all oil is removed (skin cleaner and a nail brush will help). The use of preparations containing lanolin will help to replace the natural skin oils which have been removed.
- Do not use petrol, kerosene, gas oil, thinners or solvents for washing skin.
- If skin disorders develop, obtain medical advice immediately.
- Where practical, degrease components prior to handling.
- Where there is a risk of fluids coming into contact with the eyes, eye protection should be worn, for example, goggles or a face shield. An eye wash facility should be provided.

The Health and Safety Precautions subsection refers to some commonly used chemicals and materials, hazards associated with their use, and safety measures to be taken. Some of these chemicals may be included in the following list either in their own right or as an ingredient in a sealer or adhesive.

## Acids and Alkalis

See also Battery Acids.

e.g. caustic soda, sulphuric acid.

Used in batteries and cleaning materials.

Irritant and corrosive to the skin, eyes, nose and throat. Cause burns. Can destroy ordinary protective clothing.

Avoid splashes to the skin, eyes and clothing. Wear suitable protective impervious apron, gloves and goggles. Do not breath mists.

Ensure access to eye wash bottles, shower and soap are readily available for splashing accidents.

Display Eye Hazard sign.

## Air Bags

See also Fire, Chemical Materials - General

Highly flammable, explosive – observe No Smoking policy.

Used as a safety restraint system mounted in the steering wheel.

The inflator contains a high - energetic propellant which, when ignited, produces a VERY HOT GAS (2500º C).

The gas generant used in air bags is Sodium Azide. This material is hermetically sealed in the module and is completely consumed during deployment. No attempt should be made to open an air bag inflator as this will lead to the risk of exposure to Sodium Azide. If a gas generator is ruptured, full protective clothing should be worn when dealing with the spillage.

After normal deployment, gloves and safety goggles should be worn during the handling process.

Deployed air bags should be disposed of in a plastic bag in accordance with local regulations at an approved chemical waste site.

Following any direct contact with gas generant.

- Wash affected areas thoroughly with water.
- Seek medical assistance if necessary.

Air Bags - Do's

- Do store in an airbag safe when not fitted to the vehicle.
- Do store modules in an upright position.
- Do keep modules dry.
- Do carry modules with the cover side pointing away from the body.
- Do place modules with their cover side upwards.
- Do carefully inspect modules for damage.
- Do stand to one side when connecting modules.
- Do make sure all test equipment is properly calibrated and maintained.
- Do wash you hands after handling deployed air bags.

Air Bags - Do Nots

- Do not store highly flammable material together with modules or gas generators.
- Do not store gas generators at temperatures exceeding 80º C.
- Do not store modules upside down.
- Do not attempt to open a gas generator housing.
- Do not expose gas generators to open flame or sources of heat.
- Do not place anything on top of a module cover.
- Do not use damaged modules.
- Do not touch a fired module or gas generator for at least 10 minutes.
- Do not use any electrical probes on the wiring circuit.

## Air Conditioning Refrigerant

GETtheMANUALS.org

See also Chlorofluorocarbon, Chemical Materials

Highly flammable, combustible – observe No Smoking policy.

Skin contact may result in frostbite.

Instructions given by the manufacturer must be followed. Avoid naked lights, wear suitable protective gloves and goggles.

If refrigerant comes into contact with the skin or eyes, rinse the affected areas with water immediately. Eyes should also be rinsed with an appropriate irrigation solution and should not be rubbed. SEEK MEDICAL ASSISTANCE IF NECESSARY.

## Air Conditioning Refrigerant - Do Nots

- Do not expose refrigerant bottles to sunlight or heat.
- Do not stand refrigerant bottles upright; when filling, hold them with the valve downwards.
- Do not expose refrigerant bottles to frost.
- Do not drop refrigerant bottles.
- Do not vent refrigerant to atmosphere under any circumstance.
- Do not mix refrigerants i.e. R12 (Freon) and R134a.

## Antifreeze

See also Fire, Solvents.

e.g. isopropanol, ethylene glycol, methanol.

Highly flammable, flammable, combustible.

Used in vehicle coolant systems, brake air pressure systems, screenwash solutions.

Vapors may be given off from coolant antifreeze (glycol) when heated. Avoid breathing these vapors.

Antifreeze may be absorbed through the skin in toxic or harmful quantities. Antifreeze, if swallowed can be fatal and medical attention should be sought immediately.

These products must not be used in any cooling or industrial water system which is connected or linked to general, food preparation or drinking water supplies.

## Asbestos

Used in brake and clutch linings, transmission brake bands and gaskets. Jaguar original production and replacement items are asbestos free.

See also Warning Symbols on Vehicles at the end of this subsection.

Breathing asbestos dust may cause lung damage or, in some cases, cancer.

The use of drum cleaning units, vacuum cleaning or damp wiping is preferred.

Asbestos dust waste should be dampened, placed in a sealed container and marked to make sure safe disposal. If any cutting or drilling is attempted on materials containing asbestos the item should be dampened and only hand tools or low speed power tools used.

## Battery Acids

See also Acids and Alkalis.

Gases released during charging are explosive. Never use naked flames or allow sparks near charging or recently charged batteries.

Ensure adequate ventilation.

## Brake and Clutch Linings and Pads

See Asbestos.

## Brakes Fluids (Polyalkylene Glycols)

See also Fire.

Splashes to the skin and eyes may cause irritation. Avoid skin and eye contact as far as possible. Inhalation vapor hazards do not arise at ambient temperatures because of the very low vapor pressure.

## Brazing

See Welding.

## Chemical Materials

See also Legal Aspects.

Chemical materials such as solvents, sealers, adhesives, paints, resin foams, battery acids, antifreeze, brake fluids, fuels, oils and grease should always be used with caution and stored and handled with care. They may be toxic, harmful, corrosive, irritant or highly flammable and give rise to hazardous fumes and dusts.

The effects of excessive exposure to chemicals may be immediate or delayed; briefly experienced or permanent; cumulative; superficial; life threatening; or may reduce life - expectancy.

## Chemical Materials - Do's

- Do carefully read and observe hazard and precaution warnings given on material containers (labels) and in any accompanying leaflets, posters or other instructions. Material health and safety data sheets can be obtained from manufacturers.
- Do remove chemical materials from the skin and clothing as soon as practical after soiling. Change heavily soiled clothing and have it cleaned.
- Do organise work practices and protective clothing to avoid soiling of the skin and eyes, breathing vapors, aerosols, dusts or fumes, inadequate container labelling fire and explosion hazards.

GETtheMANUALS.org

- Do wash before breaks, before eating, smoking, drinking or using toilet facilities when handling chemical materials.
- Do keep work areas clean, uncluttered and free of spills.
- Do store chemical materials according to national and local regulations.
- Do keep chemical materials out of the reach of children.

## Chemical Materials - Do Nots

- Do not mix chemical materials except under the manufacturer's instructions; some chemicals can form other toxic or harmful chemicals, give off toxic or harmful fumes or become explosive when mixed together.
- Do not spray chemical materials, particularly those based on solvents, in confined spaces e.g. when people are inside a vehicle.
- Do not apply heat or flame to chemical materials except under the manufacturer's instructions. Some are highly flammable and some may release toxic or harmful fumes.
- Do not leave containers open. Fumes given off can build up to toxic, harmful or explosive concentrations. Some fumes are heavier than air and will accumulate in confined areas, pits etc.
- Do not transfer chemical materials to unlabeled containers.
- Do not clean hands or clothing with chemicals. Chemicals, particularly solvents and fuels, will dry skin and may cause irritation leading to dermatitis or be absorbed through the skin in toxic or harmful quantities.
- Do not use emptied containers for other materials except when they have been cleaned under supervised conditions.
- Do not sniff or smell chemical materials. Brief exposure to high concentrations of fumes can be toxic or harmful.

## Chlorofluorocarbons (CFC)

There is concern in the scientific community that CFCs and Halons are depleting the upper ozone layer which filters out harmful ultraviolet radiation. Decreased filtration of ultraviolet radiation may result in increases in skin cancer, cataracts and immune system suppression in humans, as well as decreased productivity of crops and aquatic systems.

CFCs are used primarily as refrigerants in vehicle air conditioning systems and as aerosol propellants. Halons are used as fire extinguishants.

Jaguar supports worldwide elimination of CFC usage and it is recommended that Company subsidiaries and affiliates should phase out CFC usage as soon as acceptable substitutes are commercially available.

## Clutch Fluids

See Brake fluids.

## Clutch Linings and Pads

See Asbestos.

## Corrosion Protection Materials

See also Solvents, Fire.

Highly flammable, flammable – observe No Smoking policy.

These materials are varied and the manufacturer's instructions should be followed. They may contain solvents, resins, petroleum products etc. Skin and eye contact should be avoided. They should only be sprayed in conditions of adequate ventilation and not in confined spaces.

## Cutting

See Welding.

## Dewaxing

See Solvents and Fuels (Kerosene).

## Dusts

Powder, dusts or clouds may be irritant, harmful or toxic. Avoid breathing dusts from powdery chemical materials or those arising from dry abrasion operations. Wear respiratory protection if ventilation is inadequate.

Fine dusts of combustible material can present an explosion hazard. Avoid explosive limits and/or sources of ignition.

## Electric Shock

Electric shock can result from the use of faulty electrical equipment or from the misuse of equipment in good condition.

Ensure that electrical equipment is maintained in good condition and frequently tested. Faulty equipment should be labelled and preferably removed from the work station.

Ensure that flexes, cables, plugs and sockets are not frayed, kinked, cut, cracked or otherwise damaged.

Ensure that electrical equipment and flexes do not come into contact with water.

Ensure that electrical equipment is protected by the correct rated fuse.

Never misuse electrical equipment and never use equipment which is in any way faulty. The results could be fatal.

Ensure that the cables of mobile electrical equipment cannot get trapped and damaged, such as in a vehicle hoist.

Ensure that the designated electrical workers are trained in basic First Aid.

In cases of electrocution:

- Switch off the power supply before approaching the victim.
- If this is not possible push or drag the victim from the source of electricity using dry non - conductive material.
- Commence resuscitation if trained to do so.
- SUMMON MEDICAL ASSISTANCE.

GETtheMANUALS.org

## Engine Oils

See Lubricants and Grease.

## Exhaust Fumes

These contain asphyxiating, harmful and toxic chemicals and particles such as carbon oxides, nitrogen oxides, aldehydes, lead and aromatic hydrocarbons. Engines should be run only under conditions of adequate exhaust extraction or general ventilation and not in confined spaces.

## Gasolene (petrol) engine

There may not be adequate warning of odour or of irritation before toxic or harmful effects arise. These may be immediate or delayed.

## Fibre Insulation

See also Dusts.

Used in noise and sound insulation.

The fibrous nature of surfaces and cut edges can cause skin irritation. This is usually a physical and not a chemical effect.

Precautions should be taken to avoid excessive skin contact through careful organization of work practices and the use of gloves.

## Fire

See also Welding, Foams, Legal Aspects.

Many of the materials found on or associated with the repair of vehicles are highly flammable. Some give off toxic or harmful fumes if burnt.

Observe strict fire safety when storing and handling flammable materials or solvents, particularly near electrical equipment or welding processes.

Ensure, before using electrical or welding equipment, that there is no fire hazard present.

Have a suitable fire extinguisher available when using welding or heating equipment.

## First Aid

Apart from meeting any legal requirements it is desirable for someone in the workshop to be trained in First Aid procedures.

Splashes in the eye should be flushed carefully with clean water for at least ten minutes.

Soiled skin should be washed with soap and water.

Individuals affected by inhalation of gases, fumes etc. should be removed to fresh air immediately. If effects persist, consult a doctor.

If liquids are swallowed inadvertently, consult a doctor giving him the information on the container or label. Do not induce vomiting unless this action is indicated on the label.

## Fluoroelastomer

See Viton.

## Foams - Polyurethane

See also Fire.

Used in sound and noise insulation. Cured foams used in seat and trim cushioning.

Follow manufacturer's instructions.

Unreacted components are irritating and may be harmful to the skin and eyes. Wear gloves and goggles.

Individuals with chronic respiratory diseases, asthma, bronchial medical problems, or histories of allergic diseases should not work in or near uncured materials.

The components, vapors or spray mists can cause direct irritation, sensitivity reactions and may be toxic or harmful.

Vapors and spray mists must not be inhaled. These materials must be applied with adequate ventilation and respiratory protection. Do not remove the respirator immediately after spraying, wait until the vapor/mists have cleared.

Burning of the uncured components and the cured foams can generate toxic and harmful fumes. Smoking, naked flames or the use of electrical equipment during foaming operations and until vapors/mists have cleared should not be allowed. Any heat cutting of cured foams or partially cured foams should be conducted with extraction ventilation.

## Freon

See Air Conditioning Refrigerant.

## Fuels

See also, Fire, Legal Aspects, Chemicals and Solvents.

Avoid skin contact with fuel where possible. Should contact occur, wash the affected skin with soap and water.

## Gasoline (Petrol)

Highly flammable - observe No Smoking policy.

Swallowing can result in mouth and throat irritation and absorption from the stomach can result in drowsiness and unconsciousness. Small amounts can be fatal to children. Aspiration of liquid into the lungs e.g. through vomiting, is a very serious hazard.

GETtheMANUALS.org

Gasoline dries the skin and can cause irritation and dermatitis on prolonged or repeated contact. Liquid in the eye causes severe pain.

Motor gasoline may contain appreciable quantities of benzene, which is toxic upon inhalation, and the concentration of gasoline vapors must be kept very low. High concentrations will cause eye, nose and throat irritation, nausea, headache, depression and symptoms of drunkenness. Very high concentrations will result in rapid loss of consciousness.

Ensure there is adequate ventilation when handling and using gasoline. Great care must be taken to avoid the serious consequences of inhalation in the event of vapor build up arising from spillages in confined spaces.

Special precautions apply to cleaning and maintenance operations on gasoline storage tanks.

Gasoline should not be used as a cleaning agent. It must not be siphoned by mouth. See First Aid.

## Gas - oil (Diesel Fuel)

See warnings and cautions in relevant manual sections.

Combustible.

Gross or prolonged skin contact with high boiling point gas oils may also cause serious skin disorders including skin cancer.

## Kerosene (Paraffin)

Used also as heating fuel, solvent and cleaning agent.

Flammable - observe No Smoking policy.

Irritation of the mouth and throat may result from swallowing. The main hazard from swallowing arises if liquid aspiration into the lungs occurs.

Liquid contact dries the skin and can cause irritation or dermatitis. Splashes in the eye may be slightly irritating.

In normal circumstances the low volatility does not give rise to harmful vapors. Exposure to mists and vapors from kerosene at elevated temperature should be avoided (mists may arise in dewaxing). Avoid skin and eye contact and make sure there is adequate ventilation.

## Gas Cylinders

See also Fire.

Gases such as oxygen, acetylene, argon and propane are normally stored in cylinders at pressures of up to 13.790 kPa, (2000 lb/in2) and great care should be taken in handling these cylinders to avoid mechanical damage to them or to the valve gear attached. The contents of each cylinder should be clearly identified by appropriate markings.

Cylinders should be stored in well ventilated enclosures, and protected from ice and snow, or direct sunlight. Fuel gases (e.g. acetylene and propane) should not be stored in close proximity to oxygen cylinders.

Care should be exercised to prevent leaks from gas cylinders and lines, and to avoid sources of ignition.

Only trained personnel should undertake work involving gas cylinders.

## Gases

See Gas Cylinders.

## Gaskets (Fluoroelastomer)

See Viton.

## General Workshop Tools and Equipment

It is essential that all tools and equipment are maintained in good condition and the correct safety equipment is used where required.

Never use tools or equipment for any purpose other than that for which they were designed. Never over – load equipment such as hoists, jacks, axle and chassis stands or lifting slings. Damage caused by overloading is not always immediately apparent and may result in a fatal failure the next time that the equipment is used.

Do not use damaged or defective tools or equipment, particularly high speed equipment such as grinding wheels. A damaged grinding wheel can disintegrate without warning and cause serious injury.

Wear suitable eye protection when using grinding, chiselling or sand blasting equipment.

Wear a suitable breathing mask when using abrasive blasting equipment, working with asbestos-based materials or using spraying equipment.

Ensure adequate ventilation to control dusts, mists and fumes.

## High Pressure Air, Lubrication and Oil Test Equipment

See also Lubricants and Greases.

Always keep high pressure equipment in good condition, and regularly maintained, particularly at joints and unions.

Never direct a high pressure nozzle, e.g. diesel injector, at the skin as the fluid may penetrate to the under - lying tissue etc., and cause serious injury.

## Halon

See CFCs.

## Legal Aspects

GETtheMANUALS.org

Many laws and regulations make requirements relating to health and safety in the use and disposal of materials and equipment in workshops. Some of these laws which apply in the U.K. are listed. Similar laws exist for other territories:

- The Factories Act (1961).
- The Asbestos Regulations (1969).
- Highly Flammable Liquids and Liquified Petroleum Gases Regulations (1972).
- Control of Pollution Act (1974).
- Health and Safety at Work Act (1974).
- The Classification, Packaging and Labelling of Dangerous Substances Regulations (1978, 1981, 1983, 1984).
- Control of Lead at Work Regulations (1980).
- Control of Substances Hazardous to Health (COSHH) Regulations (1989).
- Abrasive Wheels Regulations (1970).
- Reporting of injuries, diseases and dangerous occurrences regulations 1985 (RIDDOR).

Workshops should be familiar, in detail, with these and associated laws and regulations.

Consult the local factory inspectorate if in any doubt.

## Lubricants and Greases

Avoid all prolonged and repeated contact with mineral oils. All lubricants and greases may be irritating to the eyes and skin.

## Used Engine Oil

Prolonged and repeated contact with mineral oil will result in the removal of natural oils from the skin, leading to dryness, irritation and dermatitis. In addition, used engine oil contains potentially harmful contaminants which may cause skin cancer. Adequate means of skin protection and washing facilities must be provided.

Do not employ used engine oils as lubricants or for any application where appreciable skin contact is likely to occur.

There are publications describing the problems and advising on precautionary measures. For the UK a typical Health and Safety Executive publication is: SHW 397: Cautionary Notice: Effects of mineral oil on the skin.

## Health Protection Precautions

- Avoid prolonged and repeated contact with oils, particularly used engine oils.
- Wear protective clothing, including impervious gloves where practicable.
- Do not put oily rags into pockets.
- Avoid contaminating clothing.
- Heavily soiled clothing and oil - impregnated footwear should not be worn. Overalls must be cleaned regularly.
- First Aid treatment should be obtained immediately for open cuts and wounds.
- Use barrier creams, applying them before each work period, to help the removal of oil from the skin.
- Wash with soap and water to make sure all oil is removed (skin cleansers and nail brushes will help). Preparations containing lanoline replace the natural skin oils which have been removed.
- Do not use gasoline (petrol), kerosene (paraffin), diesel fuel (gas oil), thinners or solvents for cleaning skin.
- If skin disorders develop, obtain medical advice without delay.
- Where practical, degrease components prior to handling.
- Where there is a risk of eye contact, eye protection should be worn, for example, chemical goggles or face shields; in addition an eye wash facility should be provided.

## Environmental Precautions

Burning used engine oil in small space heaters or boilers can be recommended only for units of approved design. In the UK the heating system must meet the requirements of HM Inspectorate of Pollution for small burners of less than 0.4 MW. If in doubt check with the appropriate local authority and/or manufacturer of approved appliances.

Dispose of used oil and used oil filters through authorized waste disposal contractors or licensed waste disposal sites, or to the waste oil reclamation trade, batterys should also be disposed off under similar arrangments. If in doubt, contact the relevant local authority for advice on disposal facilities.

It is illegal to pour used oil, antifreeze and automatic transmission fluid on to the ground, down sewers, drains, or into water courses.

## Noise

Some operations may produce high noise levels which could, in time, damage hearing. In these cases, suitable ear protection must be worn.

## Noise Insulation Materials

See Foams, Fibre Insulation.

## 0-Rings (Fluoroelastomer)

See Viton.

## Paints

See also body and paint manual.

See also Solvents, Chemical Materials.

Highly flammable, flammable - observe No Smoking policy

## Pressurized Equipment

See High Pressure Air, Lubrication and Oil Test Equipment.

## Solder

Solders are mixtures of metals such that the melting point of the mixture is below that of the constituent metals (normally lead and tin). Solder application does not normally give rise to toxic lead fumes, provided a gas/air flame is used. Oxy - acetylene flames should not be used, as they are much hotter and will cause lead fumes to be produced.

GETtheMANUALS.org

Some fumes may be produced by the application of any flame to surfaces coated with grease etc. and inhalation of these should be

avoided.

Removal of excess solder should be undertaken with care, to make sure that fine lead dust is not produced, which can give toxic effects if inhaled. Respiratory protection may be necessary.

Solder spillage and filings should be collected and removed promptly to prevent general air contamination by lead.

High standards of personal hygiene are necessary in order to avoid ingestion of lead or inhalation of solder dust from clothing.

## Solvents

See also Chemical Materials, Fuels (Kerosene), Fire.

e.g. acetone, white spirit, toluene, xylene, trichloroethane.

Used in cleaning and dewaxing materials, paints, plastics, resins, thinners etc.

Some may be highly flammable or flammable.

Skin contact will degrease the skin and may result in irritation and dermatitis following repeated or prolonged contact. Some can be absorbed through the skin in toxic or harmful quantities.

Splashes in the eye may cause severe irritation and could lead to loss of vision.

Brief exposure of high concentrations of vapors or mists will cause eye and throat irritation, drowsiness, dizziness, headaches and, in the worst circumstances, unconsciousness.

Repeated or prolonged exposure to excessive but lower concentrations of vapors or mists, for which there might not be adequate warning indications, can cause more serious toxic or harmful effects.

Aspiration into the lungs (e.g. through vomiting) is the most serious consequence of swallowing.

Avoid splashes to the skin, eyes and clothing. Wear protective gloves, goggles and clothing if necessary.

Ensure good ventilation when in use, avoid breathing fumes, vapors and spray mists and keep containers tightly sealed. Do not use in confined spaces.

When spraying materials containing solvents, e.g. paints, adhesive, coatings, use extraction ventilation or personal respiratory protection in the absence of adequate general ventilation.

Do not apply heat or flame except under specific and detailed manufacturer's instructions.

## Sound Insulation

See Fibre Insulation, Foams.

## Suspended Loads

CAUTION: Never improvise lifting tackle.

There is always a danger when loads are lifted or suspended. Never work under an unsupported, suspended or raised load e.g. suspended engine, etc.

Always make sure that lifting equipment such as jacks, hoists, axle stands, slings, etc., are adequate and suitable for the job, in good condition and regularly maintained.

## Transmission Brake Bands

See Asbestos.

## Underseal

See Corrosion Protection.

## Viton

In common with many other manufacturers' vehicles, some components fitted to the Jaguar range have 'O' rings, seals or gaskets which contain a material known as 'Viton'.

Viton is a fluoroelastomer, that is a synthetic rubber type which contains Fluorine. It is commonly used for 'O' rings, gaskets and seals of all types. Although Viton is the most well known fluoroelastomer, there are others, including Fluorel and Tecmoflon.

When used under design conditions fluoroelastomers are perfectly safe. If, however, they are exposed to temperatures in excess of 400º C, the material will not burn, but will decompose, and one of the products formed is hydrofluoric acid.

This acid is extremely corrosive and may be absorbed directly, through contact, into the body.

'O' rings, seals or gaskets which have been exposed to very high temperatures will appear charred or as a black sticky substance.

DO NOT, under any circumstances touch them or the attached components.

Enquiries should be made to determine whether Viton or any other fluoroelastomer has been used in the affected 'O' ring, seal or gasket. If they are of natural rubber or nitrile there is no hazard. If in doubt, be cautious and assume that the material may be Viton or any fluoroelastomer.

If Viton or any other fluoroelastomers have been used, the affected area should be decontaminated before the commencement of work.

Disposable heavy duty plastic gloves should be worn at all times, and the affected area washed down using wire wool and a limewater (calcium hydroxide) solution to neutralize the acid before disposing of the decomposed Viton residue and final cleaning of the area. After use, the plastic gloves should be discarded carefully and safely.

GETtheMANUALS.org

## Welding

See also Fire, Electric Shock, Gas Cylinders.

Welding processes include Resistance Welding (Spot Welding), Arc Welding and Gas Welding.

## Resistance Welding

This process may cause particles of molten metal to be emitted at a high velocity, and the eyes and skin must be protected.

## Arc Welding

This process emits a high level of ultra - violet radiation which may cause arc - eye and skin burns to the operator and to other persons nearby. Gas - shielded welding processes are particularly hazardous in this respect. Personal protection must be worn, and screens used to shield other people.

CONTACT LENS WEARERS ARE ADVISED TO REVERT TO ORDINARY SPECTACLES WHEN ARC WELDING as the arc spectrum is believed to emit microwaves which dry out the fluid between the lens and the eye. This may result in blindness when the lens is removed from the eye.

Metal spatter will also occur, and appropriate eye and skin protection is necessary.

The heat of the welding arc will produce fumes and gases from the metals being welded, the rods and from any applied coatings or contamination on the surfaces being worked on. These gases and fumes may be toxic and inhalation of these should be avoided. The use of extraction ventilation to remove the fumes from the working area may be necessary particularly in cases where the general ventilation is poor, or where considerable welding work is anticipated. In extreme cases or confined spaces where adequate ventilation cannot be provided, air-fed respirators may be necessary.

## Gas Welding (and Cutting)

Oxy - acetylene torches may be used for welding and cutting, and special care must be taken to prevent leakage of these gases, with consequent risk of fire and explosion.

The process will produce metal spatter and eye and skin protection is necessary.

The flame is bright, and eye protection should be used, but the ultra - violet emission is much less than that from arc welding, and lighter filters may be used.

The process itself produces few toxic fumes, but such fumes and gases may be produced from coatings on the work, particularly during cutting away of damaged body parts, and inhalation of the fumes should be avoided.

In brazing, toxic fumes may be produced from the metals in the brazing rod, and a severe hazard may arise if brazing rods containing cadmium are used. In this event particular care must be taken to avoid inhalation of fumes and expert advice may be required.

SPECIAL PRECAUTIONS MUST BE TAKEN BEFORE ANY WELDING OR CUTTING TAKES PLACE ON VESSELS WHICH HAVE CONTAINED COMBUSTIBLE MATERIALS, E.G. BOILING OR STEAMING OUT OF FUEL TANKS.

## Warning Symbols on Vehicles

Decals showing warning symbols will be found on various vehicle components.

These decals must not be removed. The warnings are for the attention of owners/operators and persons carrying out service or repair operations on the vehicle.

The most commonly found decals are reproduced below together with an explanation of the warnings.

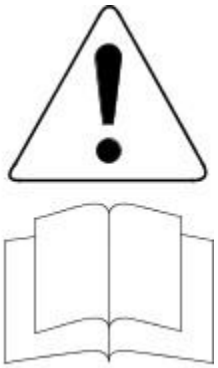

VUJ0000269

1. **1.** Components or assemblies displaying the warning triangle and open book symbol advise consultation of the relevant section of the owners handbook before touching or attempting adjustments of any kind.

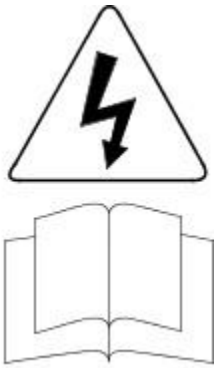

VUJ0000270

2. **2.** Components or assemblies displaying the warning triangle with the electrified arrow and open book symbol give warning of inherent high voltages. Never touch these with the engine running or the ignition switched on. See Electric Shock in this subsection.

GETNEWMANUALS.COM

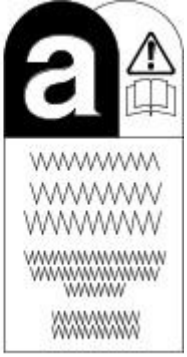

VUJ0000271

3. **3.** Jaguar vehicles and replacement parts which contain asbestos are identified by this symbol. See Asbestos in this subsection.

VUJ0000272

4. **4.** Components or assemblies displaying this symbol give warning that the component contains a corrosive substance. See Acids and Alkalis in this subsection.

VUJ0000273

5. **5.** Vehicles displaying the caution circle with a deleted lighted match symbol, caution against the use of naked lights or flames within the immediate vicinity due to the presence of highly flammable or explosive liquids or vapors. See Fire in this subsection.

VUJ0002037

6. **6.** All vehicles fitted with the passenger air bag from the factory have a warning sticker attached to the instrument panel, prohibiting the use of rear facing child seats in the front seating position. Failure to follow this instructions may result in personal injury.

## White Spirit

See Solvents.

## Safety Precautions

• WARNINGS:

Working on the fuel system results in fuel and fuel vapor being present in the atmosphere. Fuel vapor is extremely flammable, hence great care must be taken whilst working on the fuel system. Adhere strictly to the following precautions:

- Do not smoke in the work area.
- Display 'no smoking' signs around the area.
- Disconnect the battery before working on the fuel system.
- Do not connect/disconnect electrical circuits, use electrical equipment or other tools or engage in working practices which in any way may result in the production of sparks.
- Ensure that a $CO_2$ fire extinguisher is close at hand.

GET-MANUALS.org

- Ensure that dry sand is available to soak up any fuel spillage.
- Empty fuel using suitable fire proof equipment into an authorized explosion proof container.
- Do not empty fuel while working in a workshop or a pit.
- Ensure that working area is well ventilated.
- Ensure that any work on the fuel system is only carried out by experienced and well qualified maintenance personnel.
- Ensure that fume extraction equipment is used where appropriate.

Fume extraction equipment must be in operation when solvents are used e.g. Trichloroethane, white spirit, sbp3, methylene chloride, perchlorethylene. Do not smoke in the vicinity of volatile degreasing agents.

Whenever possible, use a ramp or pit whilst working beneath a vehicle, in preference to jacking. Position chocks at the wheels as well as applying the parking brake. Never rely on a jack alone to support a vehicle. Use axle stands, or blocks carefully placed at the jacking points, to provide a rigid location. Check that any lifting equipment used has adequate capacity and is fully serviceable. Ensure that a suitable form of fire extinguisher is conveniently located. When using electrical tools and equipment, inspect the power lead for damage and check that it is properly earthed. Disconnect the earth (grounded) terminal of the vehicle battery. Do not disconnect any pipes of the air conditioning refrigeration system unless you are trained and instructed to do so. A refrigerant is used which can cause blindness if allowed to come into contact with the eyes. Ensure that adequate ventilation is provided when volatile degreasing agents are being used.

Adhere strictly to handling and safety instructions given on containers and labels. Keep oils and solvents away from naked flames and other sources of ignition. Do not apply heat in an attempt to free seized nuts or fittings; as well as causing damage to protective coatings, there is a risk of damage from stray heat to electronic equipment and brake lines. Do not leave tools, equipment, spilt oil etc. around the work area. Wear protective overalls and use barrier cream when necessary.

## Environmental Protection

In some countries it is illegal to pour used oil onto the ground, down sewers or drains, or into water courses. The burning of used engine oil in small space heaters or boilers is not recommended unless emission control equipment is fitted. Dispose of used oil through authorized waste disposal contractors, to licensed waste disposal sites or to the waste oil reclamation trade. If in doubt, contact the Local Authority for advice on disposal facilities.

GETtheMANUALS.org

# General Information - How To Use This Manual

Description and Operation

## Copyright Statement

Copyright.© Jaguar Cars Ltd. 1999

All rights reserved. No part of this publication may be reproduced, stored in a retrieval system or transmitted in any form, electronic, mechanical, photocopying, recording or other means, without prior written permission of Jaguar Cars Ltd., Customer Service Department, Browns Lane, Coventry, CV5 9DR, England.

## Workshop Manual Organization

This manual covers descriptive, diagnostic (including OBD), and repair aspects to service the vehicle effectively.

The manual is arranged in sections, each section dealing with a specific part of a vehicle system. For example, Section 412-03 covers air conditioning, which is part of the climate control system.

The first digit of the section number indicates the group. There are five groups:

- General Information.
- Chassis.
- Powertrain.
- Electrical.
- Body and Paint.

The second and third digits of the section number indicate the vehicle system.

The last two digits of the section number indicate the part of the system covered by the section.

**www.JagDocs.com**

GETtheMANUALS.org

Published: 11-May-2011

# General Information - Important Safety Instructions

Description and Operation

Safety Notice

Appropriate service methods and correct repair procedures are essential for the safe, reliable operation of all motor vehicles, as well as the safety of the person doing the work. This manual provides general directions for accomplishing service and repair work with tested effective techniques. Following them will help assure reliability.

There are numerous variations in procedures, techniques, tools, and parts for servicing vehicles, as well as in the skill of the person doing the work. This manual cannot possibly anticipate all such variations and provide advice or cautions as to each. Accordingly, anyone who departs from the instructions provided in the manual must first establish that neither personal safety or vehicle integrity is compromised from choices of methods, tools or parts.

GETtheMANUALS.org

# General Information - Road / Roller Testing

Description and Operation

Road or roller testing may be carried out for various reasons and a procedure detailing pre - test checks, through engine starting and stopping, pre - driving checks, on - test checks to final checks on completion of the test is given overleaf.

Unless complete vehicle performance is being checked, the full road test procedure need not be carried out. Instead, those items particularly relevant to the system/s being checked can be extracted.

## Pre - Test Checks

WARNING: If the brake system hydraulic fluid level is low, pedal travel is excessive or a hydraulic leak is found, do not attempt to road test the vehicle until the reason for the low fluid level, excessive pedal travel or hydraulic leak is found and rectified.

It is suggested that pre - test checks, and functional tests of those systems/circuits which affect the safe and legal operations of the vehicle, such as brakes, lights and steering, should always be carried out before the road or roller test.

- Engine oil level
- Engine coolant level
- Tires, for correct pressure, compatible types and tread patterns, and wear within limits.
- There is sufficient fuel in the tank to complete the test.
- All around the engine, transmission and under the vehicle for oil, coolant, hydraulic and fuel leaks. Make a note of any apparent leaks and wipe off the surrounding areas to make it easier to identify the extent of the leak on completion of the test.

## Starting the Engine

• NOTE: On initial drive away from cold and within the first 1.5 km (1 mile), do not depress accelerator pedal beyond half travel until the vehicle has attained a minimum speed of 25 km/h (15 miles/h). Never operate at high engine speed or with the accelerator pedal at full travel whilst the engine is cold.

With the ignition switched off, check:

- The handbrake is applied.
- The gear lever is in neutral.
- All instrument gauges (except fuel gauge) read zero.

With the ignition switched on, check:

- Ignition controlled warning lights come on.
- Engine temperature gauge registers a reading compatible with the engine temperature.
- Fuel gauge registers a reading appropriate to the fuel level in the tank.
- The operation of the handbrake warning light and fluid level warning indicator light.

## On Road or Roller Test Check:

CAUTION: If road testing, check the brake operation while still travelling at low speed before continuing with the test. If the brakes pull to one side, or appear to be otherwise faulty, do not continue with the road test until the fault has been found and rectified.

- Clutch pedal operation is not stiff or heavy.
- Initial gear engagement is smooth and there is no evidence of clutch drag.
- Handbrake control operates smoothly and the handbrake releases quickly and completely.
- Clutch takes up the drive smoothly, without slip or judder.
- The engine power output is satisfactory, full power is achieved, acceleration is smooth and pedal operation not stiff or heavy, and engine speed returns to idle correctly.
- There is no excessive or abnormally colored smoke from the engine under normal driving, heavy load or overrun conditions.
- Steering operation, including power steering where fitted, is smooth, accurate, not excessively heavy or with excessive free play or vibration. Does not pull to one side and self centres smoothly after cornering.
- Speedometer, oil pressure warning lamp, coolant temperature gauge and tachometer (where fitted) register the correct readings or operate correctly.
- Switches and controls operate smoothly and positively, warning or indicator lights operate correctly and the direction indicator control self cancels when the steering is returned to the straight ahead position.
- Heating and ventilation systems work correctly and effectively.
- Brake operation and efficiency.

## Brake Testing

WARNING: When brake testing, avoid breathing the smoke or fumes from hot brakes, this may contain asbestos dust which is hazardous to health, see Health and Safety Precautions.

Avoid brake testing on busy roads where it can cause inconvenience or danger to other road users.

CAUTION: Brake testing which includes heavy brake applications should not be carried out with new brake pads/discs or linings/drums until the components have bedded - in. New brake friction components will not reach full efficiency until the bedding - in process is complete.

Test the brakes at several speeds within the normal operating range using both light and heavy pedal pressure. Note any tendency to snatch, pull or drag, and any undue delay in application or release.

Allow the vehicle to coast and note any tendency to pull to one side, or evidence that the brakes are binding.

After stopping the vehicle (not immediately after a period of heavy braking), carefully check the brake temperature. A disc which feels hot, or appreciably hotter than the others, indicates that the brake is binding.

After completion of the test, check for:

GETtheMANUALS.org

- Oil, coolant, hydraulic, air and fuel leaks.

- Abnormal temperature of any moving components or assemblies, e.g. wheel hubs, transmission, axle etc., which might indicate overtightness or lack of lubrication.

GETtheMANUALS.org

# General Information - Solvents, Sealants and Adhesives

Description and Operation

WARNING: Always handle all solvents, sealers and adhesives with extreme care. Some contain chemicals or give off fumes which can be dangerous to health. Always follow the manufacturers instructions. If in doubt about any substance, particularly a solvent, DO NOT use it.

CAUTION: If in doubt about the suitability of any proprietary solvent or sealer for a particular application, contact the manufacturer of the product for information regarding storage, handling and application.

The Solvents, Sealers and Adhesives subsection refers to some commonly used chemicals and materials, hazards associated with their use, and safety measures to be taken.

## Adhesives and Sealers

Highly flammable, flammable, combustible – observe No Smoking policy.

Generally should be stored in No Smoking' areas. Cleanliness and tidiness in use should be observed e.g. disposable paper covering benches; should be dispensed from applicators where possible; containers, including secondary containers, should be labelled appropriately.

## Solvent - based Adhesives/Sealers - See Solvents

Follow manufacturer's instructions.

## Water - based Adhesives/Sealers

Those based on polymer emulsions and rubber latexes may contain small amounts of volatile toxic and harmful chemicals. Skin and eye contact should be avoided and adequate ventilation provided during use.

## Hot Melt Adhesives

In the solid state, they are safe. In the molten state they may cause burns and health hazards may arise from the inhalation of toxic fumes.

Use appropriate protective clothing and a thermostatically controlled heater with a thermal cut - out and adequate extraction.

## Resin - based Adhesives/Sealers e.g. Epoxide and Formaldehyde Resin - based

Mixing should be carried out in well ventilated areas, as harmful or toxic volatile chemicals may be released.

Skin contact with uncured resins and hardeners can result in irritation, dermatitis, and absorption of toxic or harmful chemicals through the skin. Splashes can damage the eyes.

Provide adequate ventilation and avoid skin and eye contact.

## Anaerobic, Cyanoacrylate (Super - glues) and other Acrylic Adhesives

Many are irritant, sensitizing or harmful to the skin and/or respiratory tract. Some are eye irritants.

Skin and eye contact should be avoided and the manufacturer's instructions followed.

Cyanoacrylate adhesives (super-glues) MUST NOT contact the skin or eyes. If skin or eye tissue is bonded, cover with a clean moist pad and seek immediate medical attention. Do not attempt to pull tissue apart. Use in well ventilated areas as vapors can cause irritation to the nose and eyes.

For two - pack systems see Resin - based and Isocyanate Adhesives/Sealers.

## Isocyanate (Polyurethane) Adhesives/Sealers

See also Resin - based Adhesives

Individuals suffering from asthma or respiratory allergies should not work with or near these materials as sensitivity reactions can occur.

Over exposure is irritating to the eyes and respiratory system. Excessive concentrations may produce effects on the nervous system including drowsiness. In extreme cases, loss of consciousness may result. Long term exposure to vapor concentrations may result in adverse health effects.

Prolonged contact with the skin may lead to skin irritation and, in some cases, dermatitis.

Splashes entering the eye will cause discomfort and possible damage.

Any spraying should preferably be carried out in exhaust ventilated booths removing vapors and spray droplets from the breathing zone.

Wear appropriate gloves, eye and respiratory protection.

GETtheMANUALS.org

# General Information - Standard Workshop Practices

Description and Operation

## Protecting the Vehicle

Always install covers to protect the fenders before commencing work in the engine compartment. Always install the interior protection kit, wear clean overalls and wash hands or wear gloves before working inside the vehicle. Avoid spilling hydraulic fluid, antifreeze or battery acid on the paintwork. In the event of spillage, wash off with water immediately. Use polythene sheets in the luggage compartment to protect carpets. Always use the recommended service tool, or a satisfactory equivalent, where specified. Protect temporarily exposed screw threads by replacing nuts or installing caps.

## Vehicle in Workshop

When working on a vehicle in the workshop always make sure that:

- The parking brake is applied or the wheels are securely chocked to prevent the vehicle moving forwards or backwards
- If the engine is to be run, there is adequate ventilation, or an extraction hose to remove exhaust fumes is installed
- There is adequate room to jack up the vehicle and remove the wheels, if necessary
- Fender covers are always installed if any work is to be carried out in the engine compartment
- The battery is disconnected if working on the engine, underneath the vehicle, or if the vehicle is jacked up

CAUTION: When electric arc welding on a vehicle, always disconnect the generator wiring to prevent the possibility of a surge of current causing damage to the internal components of the generator.

- If using welding equipment on the vehicle, ensure a suitable fire extinguisher is readily available.

GETtheMANUALS.org

# Identification Codes - Identification CodesVIN Range: M45255->N52047

Description and Operation

## Vehicle Identification Number (VIN)

The official VIN for title and registration purposes is stamped on a metal plate and fastened to the instrument panel. It is positioned close on the left-hand side of the vehicle and is visible from the outside.

The vehicle identification number is also located on the vehicle certification label.

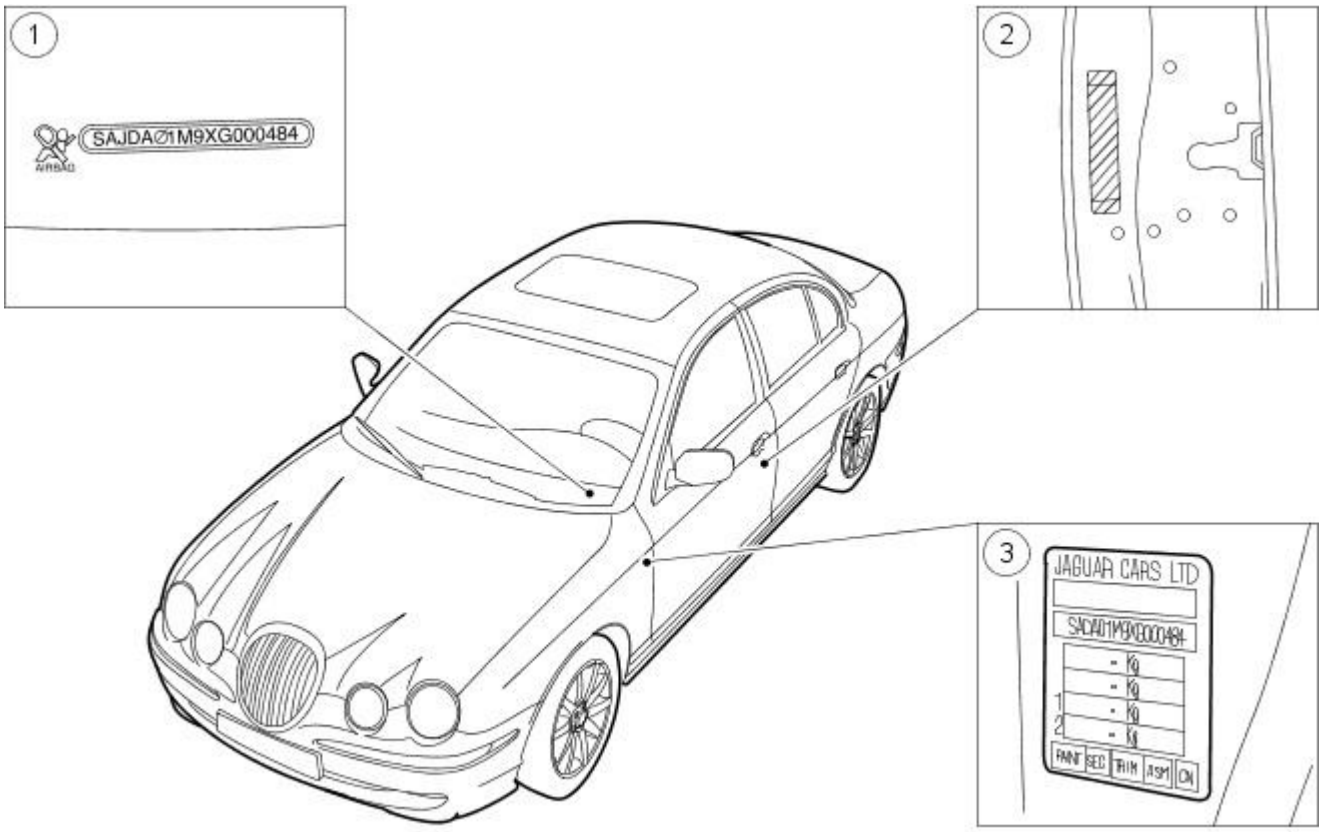


VUJ0005676

| Item | Part Number | Description |
|---|---|---|
| 1 | — | VIN plate |
| 2 | — | Bar code label (America) |
| 3 | — | Vehicle identification label (Europe/rest of the world shown) |

## Vehicle Identification Number (Typical)

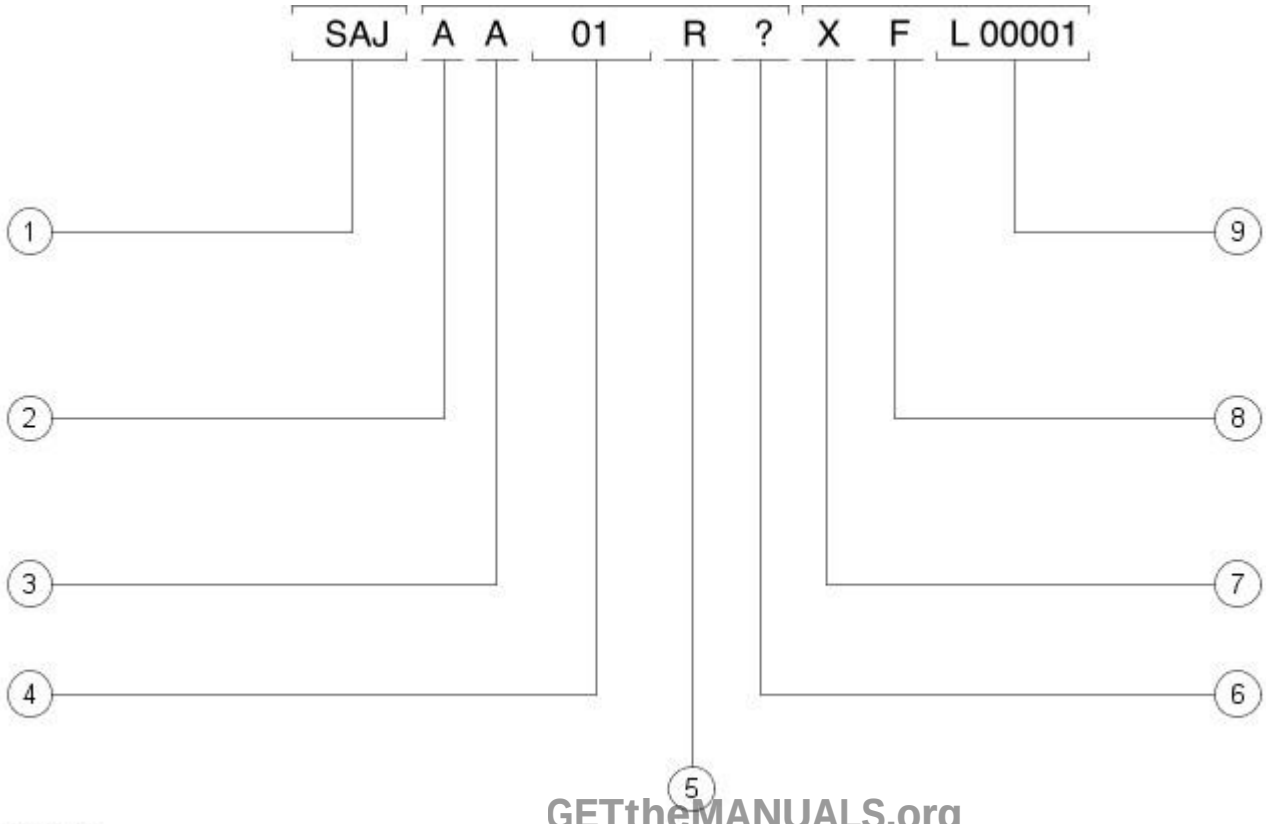


VUJ0001849

GETtheMANUALS.org

| Item | Part Number | Description |
|---|---|---|
| 1 | — | World manufacturer identifier |
| 2 | — | Market, air bag specification |
| 3 | — | Transmission and steering code |
| 4 | — | Body code |
| 5 | — | Emission control system |
| 6 | — | Check digit |
| 7 | — | Model year |
| 8 | — | Assembly plant, model line |
| 9 | — | Production sequence number |

## World Manufacturer Identifier

**VIN Positions 1, 2 and 3**

| Codes | Manufacturer | Make | Type |
|---|---|---|---|
| SAJ | Jaguar Cars Limited, England | Jaguar | Passenger Car |

## Market, Air Bag Specification

**VIN position 4**

| VIN code | Description |
|---|---|
| A | Rest of the world with twin air bags, side air bags and curtain air bags (from 2002.5my) |

## Transmission, Steering Code

**VIN Position 5**

| VIN Code | Description |
|---|---|
| A | Automatic LHS |
| B | Manual LHS |
| C | Automatic RHS |
| D | Manual RHS |

## Body Code

**VIN Position 6 and 7**

| VIN Code | Description |
|---|---|
| 01 | 4-Door,5 seat saloon high series |
| 02 | Entry series |
| 03 | Sport series (from 2002.5my) |

## Engine Emission System

**VIN Position 8**

| VIN Code | Description |
|---|---|
| N | 2.5L Normally aspirated with evaporative emissions |
| P | 3.0L Normally aspirated with stage 3 evaporative emissions |
| R | 4.2L Normally aspirated with stage 3 evaporative emissions |
| S | 4.2L Supercharged with stage 3 evaporative emissions |

## Check Digit

**VIN Position 9**

| VIN Code | Description |
|---|---|
| 0 - 9 or X | Calculated in accordance with American standard CFR part 565 |

## Model Year

**VIN Position 10**

| VIN Code | Description |
|---|---|
| 1 | 2001 model year |
| 2 | 2002 model year |

## Assembly Plant and Model Line

**VIN Position 11**

| VIN Code | Description |
|---|---|
| F | Castle Bromwich 3.0L |
| H | Castle Bromwich 4.2L Normally aspirated |
| 1 | Castle Bromwich 4.2L Super charged |
| J | Castle Bromwich 2.5L |

## Production Sequence Number

**VIN Position 12 through 17**

| Sequence Number |
|---|
| L00001 - L99999 |
| M00001 - M99999 |
| N00001 - N99999 |
| P00001 - P99999 |
| R00001 - R99999 |

## Vehicle Identification Label

The vehicle certification label also contains a 17 character vehicle identification number. This number is used for warranty identification of the vehicle.

GETtheMANUALS.org

Vehicle Certification Number (Europe and Rest of the world)

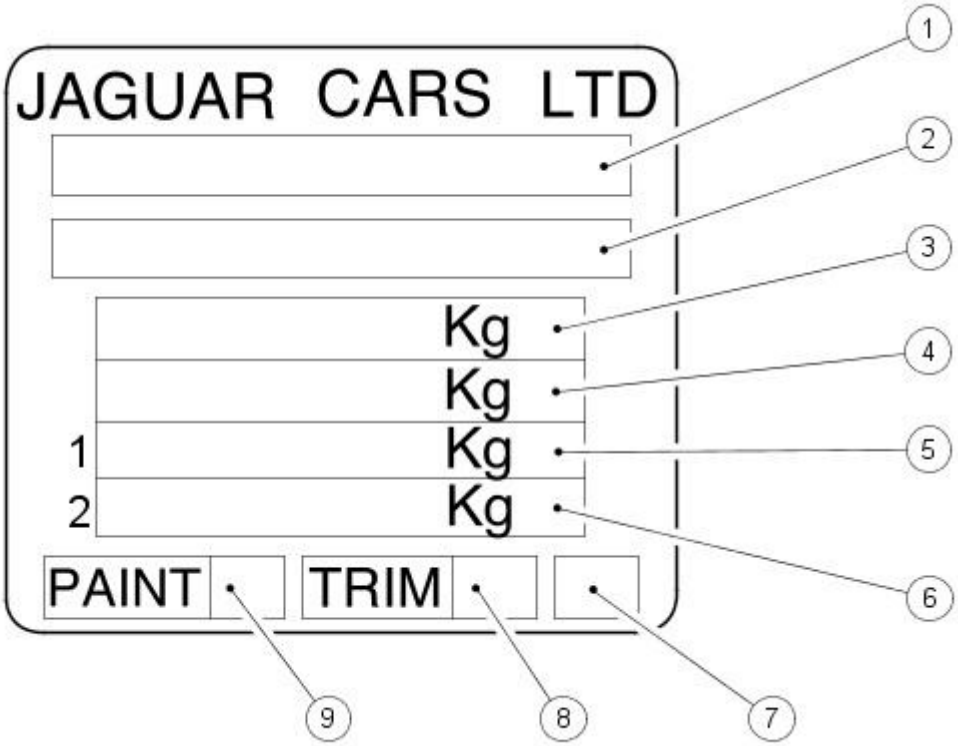


VUJ0001850

| Item | Part Number | Description |
|---|---|---|
| 1 | — | Whole Vehicle Type Approval (WVTA) number printed here when applicable |
| 2 | — | Vehicle identification number |
| 3 | — | Gross vehicle weight |
| 4 | — | Gross train weight |
| 5 | — | Maximum permitted front axle loading |
| 6 | — | Maximum permitted rear axle loading |
| 7 | — | Date of manufacture |
| 8 | — | Interior trim code |
| 9 | — | Paint code |

Vehicle Identification Label (North America)

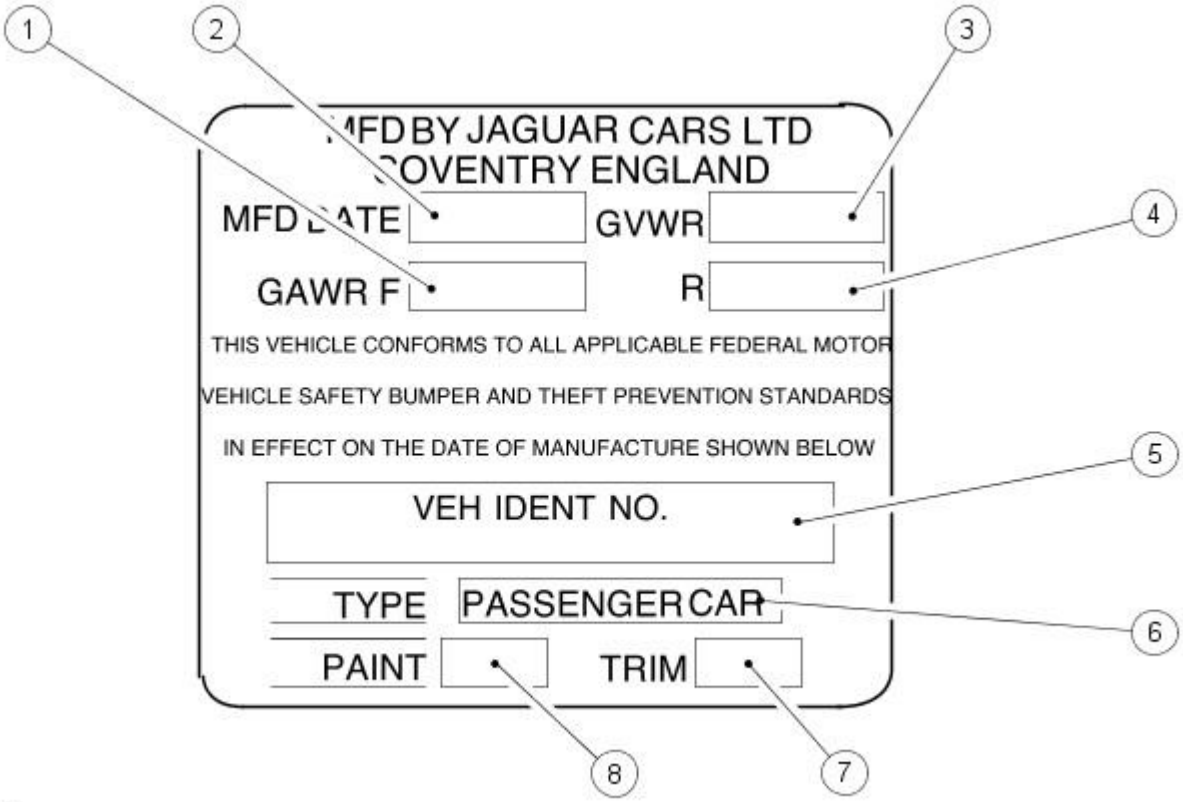


VUJ0001851

| Item | Part Number | Description |
|---|---|---|
| 1 | — | Maximum permitted front axle loading |
| 2 | — | Date of manufacture |
| 3 | — | Maximum permitted rear axle loading |
| 4 | — | Gross vehicle weight |
| 5 | — | Vehicle identification number |
| 6 | — | Type |
| 7 | — | Interior trim code |

GETtheMANUALS.org

| | | |
|---|---|---|
| 8 | — | Paint code |

Vehicle Identification Label (Saudi Arabia and Gulf States)

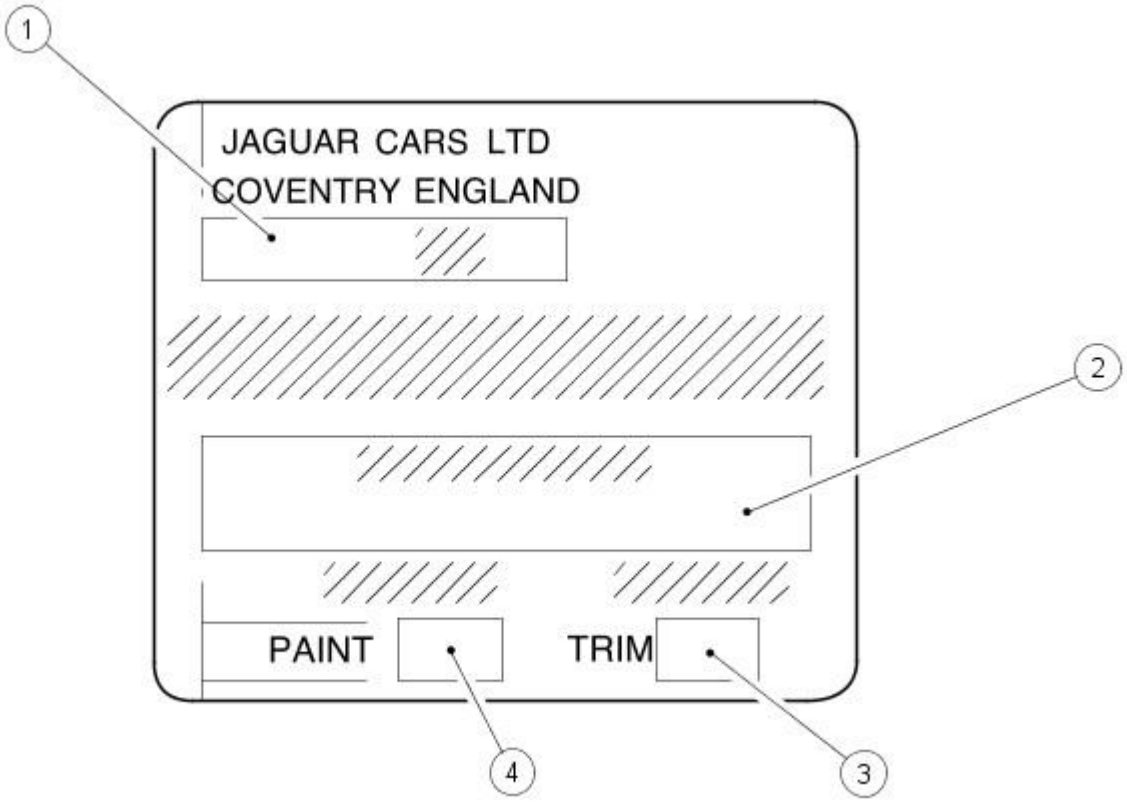


VUJ0001852

| Item | Part Number | Description |
|---|---|---|
| 1 | — | Date of manufacturer |
| 2 | — | Vehicle identification number |
| 3 | — | Interior trim code |
| 4 | — | Paint code |

Vehicle Identification Label (Canada)

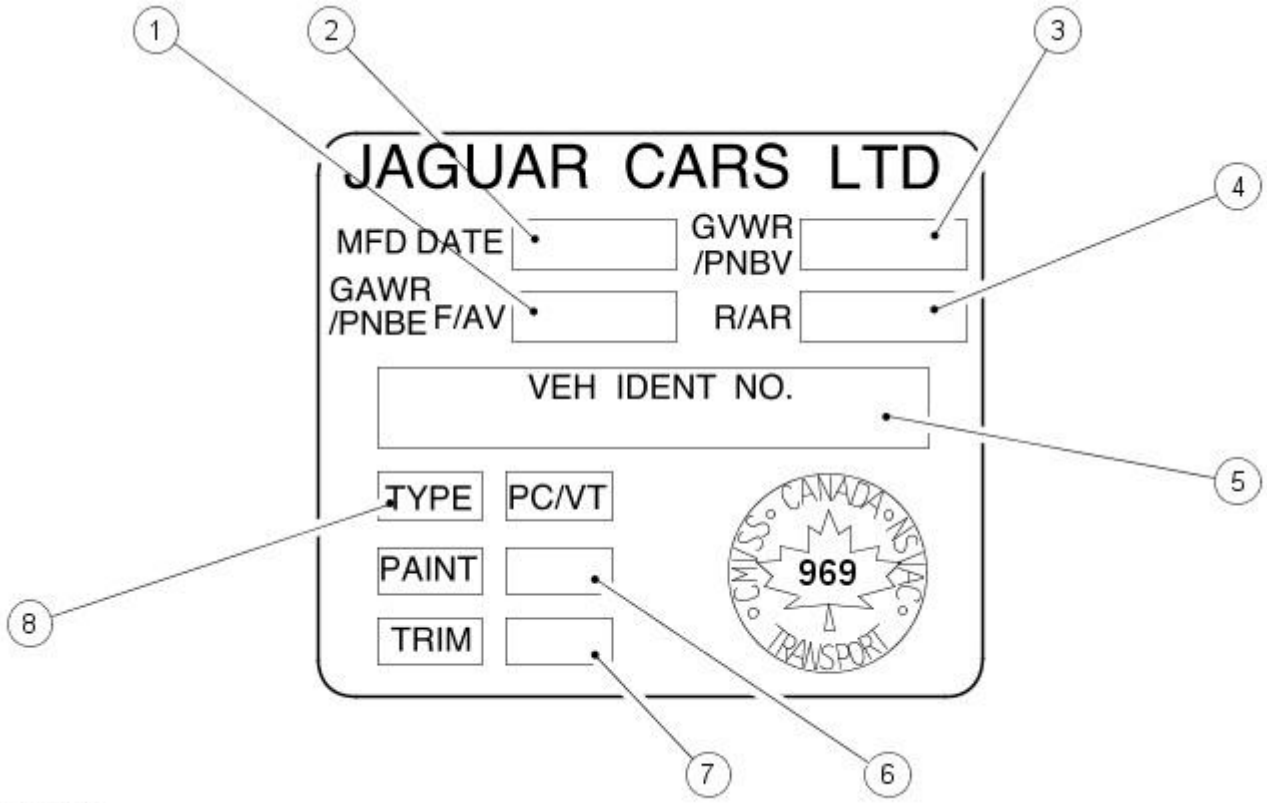


VUJ0001853

| Item | Part Number | Description |
|---|---|---|
| 1 | — | Maximum permitted front axle loading |
| 2 | — | Date of manufacturer |
| 3 | — | Maximum permitted rear axle loading |
| 4 | — | Gross vehicle weight |
| 5 | — | Vehicle identification number |
| 6 | — | Paint code |
| 7 | — | Interior trim code |
| 8 | — | Type |

GETtheMANUALS.org

## Automatic Transmission Number

The serial number of the transmission unit is displayed on a metal label or bar code (where equipped) attached to the transmission casing.

## Engine Number (V6)

The engine number is contained on a bar code label on the front cover and is also stamped in the cylinder block casting on the left hand side of the engine below the engine mounting.

## Engine Number (V8)

The serial number is stamped on an engine web on the left hand side of the cylinder block behind the engine mounting. The emission code is also located here, on the transmission flange.

GETtheMANUALS.org

# Identification Codes - Identification CodesVIN Range: N52048->N99999

Description and Operation

## Vehicle Identification Number (VIN)

The official Vehicle Identification Number (VIN) for title and registration purposes is stamped on a metal plate and fastened to the instrument panel. It is positioned close on the left-hand side of the vehicle and is visible from the outside.

The VIN is also located on the vehicle certification label.

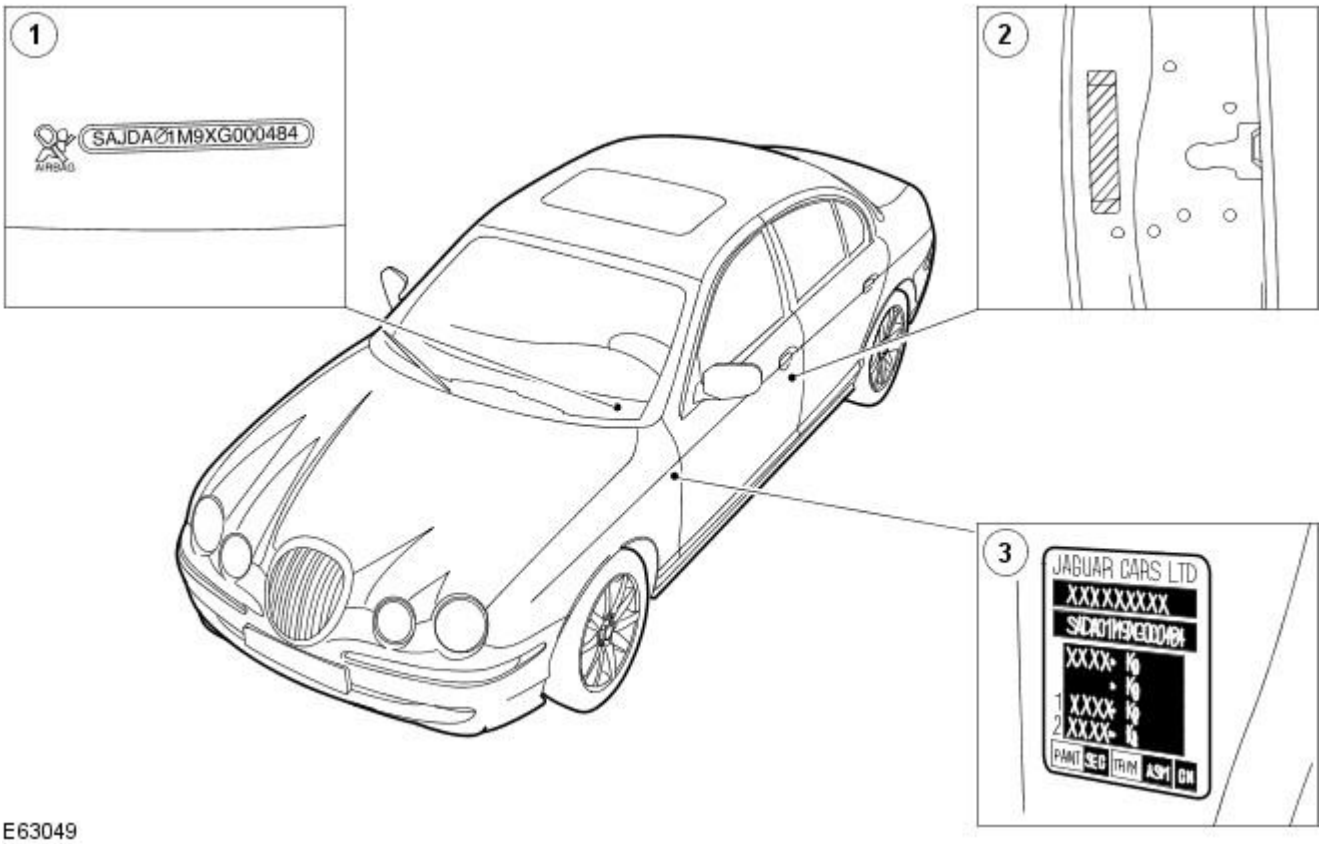


E63049

| Item | Part Number | Description |
|---|---|---|
| 1 | — | VIN plate |
| 2 | — | Bar code label (USA) |
| 3 | — | VIN label (Europe/Rest of World shown) |

## Vehicle Identification Number (Typical)

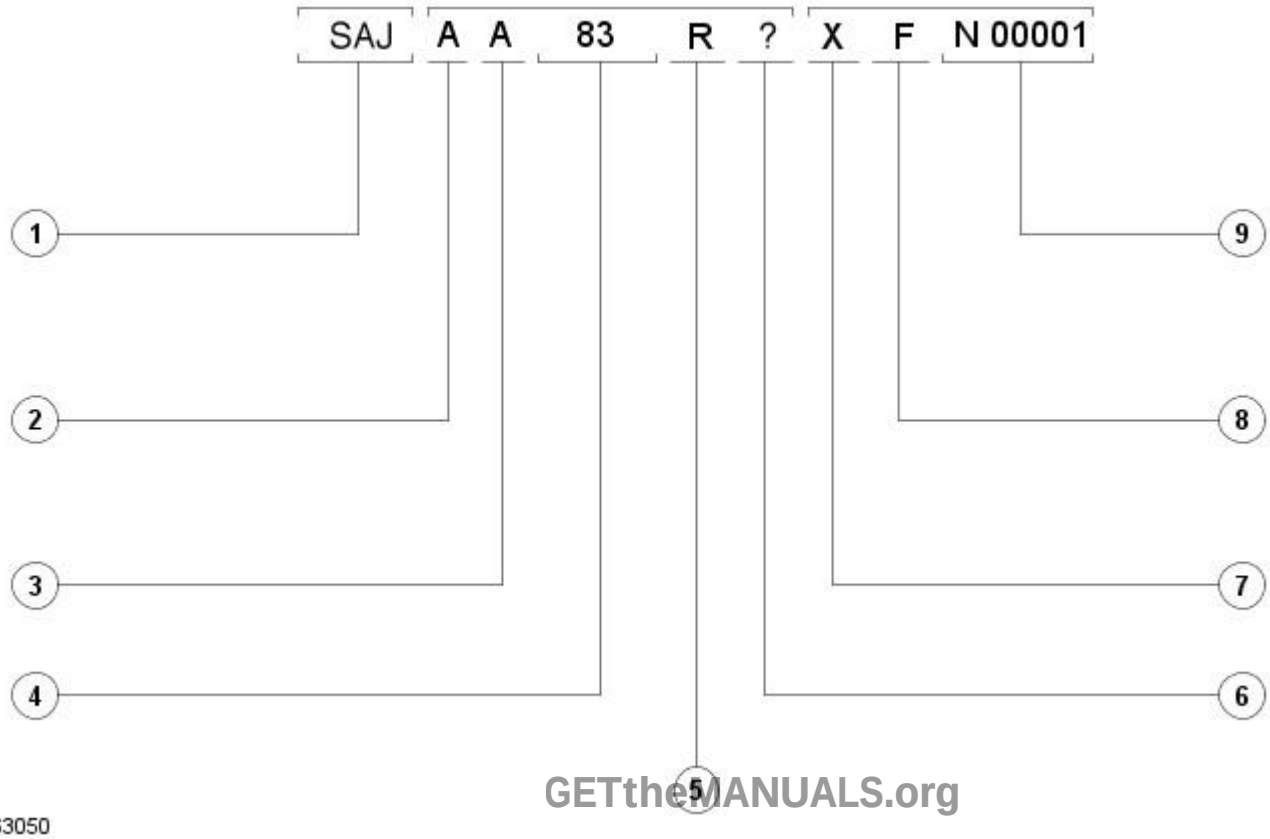


GETtheMANUALS.org

E63050

| Item | Part Number | Description |
|---|---|---|
| 1 | — | World manufacturer identifier |
| 2 | — | Market, air bag specification |
| 3 | — | Transmission and steering code |
| 4 | — | Body code |
| 5 | — | Emission control system |
| 6 | — | Check digit |
| 7 | — | Model year |
| 8 | — | Assembly plant, model line |
| 9 | — | Production sequence number |

## World Manufacturer Identifier

**VIN Positions 1, 2 and 3**

| Codes | Manufacturer | Make | Type |
|---|---|---|---|
| SAJ | Jaguar Cars Limited, England | Jaguar | Passenger Car |

## Market, Air Bag Specification

**VIN position 4**

| VIN code | Description |
|---|---|
| A | Rest of World with twin air bags, side air bags and curtain air bags |
| K | Japan with twin air bags, side air bags and curtain air bags |
| W | USA with twin air bags, side air bags and curtain air bags |
| X | Canada with twin air bags, side air bags and curtain air bags |
| Y | Mexico with twin air bags, side air bags and curtain air bags |

## Transmission, Steering Code

**VIN Position 5**

| VIN Code | Description |
|---|---|
| A | Automatic LHS |
| B | Manual LHS |
| C | Automatic RHS |
| D | Manual RHS |

## Body Code

**VIN Position 6 and 7**

| VIN Code | Description |
|---|---|
| 01 | 4-Door,5 seat saloon high series |
| 02 | Entry series |
| 03 | Sport series |

## Engine Emission System

**VIN Position 8**

• NOTE: *1 EU. Includes the following markets; Austria, Belgium, Cyprus, Czech Rep, Denmark, Estonia, Finland, France, Germany, Greece, Holland, Hungary, Italy, Latvia, Lithuania, Luxembourg, Malta, Norway, Poland, Portugal, Rep. of Ireland, Slovenia, Slovakia, Spain (incl. Canary Islands) and UK.

• NOTE: *2 East Europe. Includes the following markets; Bulgaria, Croatia and Serbia.

• NOTE: *3 Russia. Includes the following markets; Belarus, Kazakhstan, Ukraine and Uzbekistan.

• NOTE: *4 Middle East. Includes the following markets; Abu Dhabi, Bahrain, Dubai, Jordan, Kuwait, Lebanon, Oman, Quatar, Saudi Arabia.

| VIN Code | Engine | Market |
|---|---|---|
| D | 3.0L | Argentina, Chilie, Dominican Rep, Guatamala, *4 Middle East, Panama, Phillipines and Taiwan |
| F | 4.2L | |
| G | 4.2L Supercharged | |
| N/A | 2.7L Diesel | |
| D | 3.0L | China |
| N/A | 4.2L | |
| N/A | 4.2L Supercharged | |
| N/A | 2.7L Diesel | |
| M | 3.0L | *2 East Europe, *1 EU, Israel, Morrocco, Norway, *3 Russia, Switzerland and Turkey |
| P | 4.2L | |
| R | 4.2L Supercharged | |
| 1 | 2.7L Diesel | |
| W | 3.0L | Brazil |
| X | 4.2L | |
| Y | 4.2L Supercharged | |
| N/A | 2.7L Diesel | |
| S | 3.0L | Egypt and Syria and South Korea |
| U | 4.2L | |
| V | 4.2L Supercharged | |
| N/A | 2.7L Diesel | |
| H | 3.0L | Japan |
| K | 4.2L | |
| L | 4.2L Supercharged | |
| N/A | 2.7L Diesel | |
| A | 3.0L | USA |
| B | 4.2L | |
| C | 4.2L Supercharged | |
| N/A | 2.7L Diesel | |

GETtheMANUALS.org

| VIN Code | Engine | Market |
|---|---|---|
| A | 3.0L | Canada |
| B | 4.2L | |
| C | 4.2L Supercharged | |
| N/A | 2.7L Diesel | |
| H | 3.0L | Mexico |
| K | 4.2L | |
| L | 4.2L Supercharged | |
| N/A | 2.7L Diesel | |
| D | 3.0L | Indonisia, Malaysia, Singapore, Sri Lanka |
| F | 4.2L | |
| G | 4.2L Supercharged | |
| N/A | 2.7L Diesel | |
| H | 3.0L | Austrailia, Hong Kong and New Zealand and Thailand |
| K | 4.2L | |
| L | 4.2L Supercharged | |
| N/A | 2.7L Diesel | |
| S | 3.0L | South Africa |
| U | 4.2L | |
| V | 4.2L Supercharged | |
| N/A | 2.7L Diesel | |
| M | 3.0L | Cyprus, Malta and UK (and Eire) |
| P | 4.2L | |
| R | 4.2L Supercharged | |
| 1 | 2.7L Diesel | |

## Check Digit

**VIN Position 9**

| VIN Code | Description |
|---|---|
| 0 - 9 or X | Calculated in accordance with American standard CFR part 565 |

## Model Year

**VIN Position 10**

| VIN Code | Description |
|---|---|
| 6 | 2006 model year |

## Assembly Plant and Model Line

**VIN Position 11**

| VIN Code | Description |
|---|---|
| F | Castle Bromwich 3.0L |
| H | Castle Bromwich 4.2L Normally aspirated |
| 1 | Castle Bromwich 4.2L Supercharged |
| 7 | Castle Bromwich 2.7L Diesel |

## Production Sequence Number

**VIN Position 12 through 17**

| Sequence Number |
|---|
| N52207-N99999 |

## VIN Label

VIN Label (Europe and Rest of world)

GETtheMANUALS.org

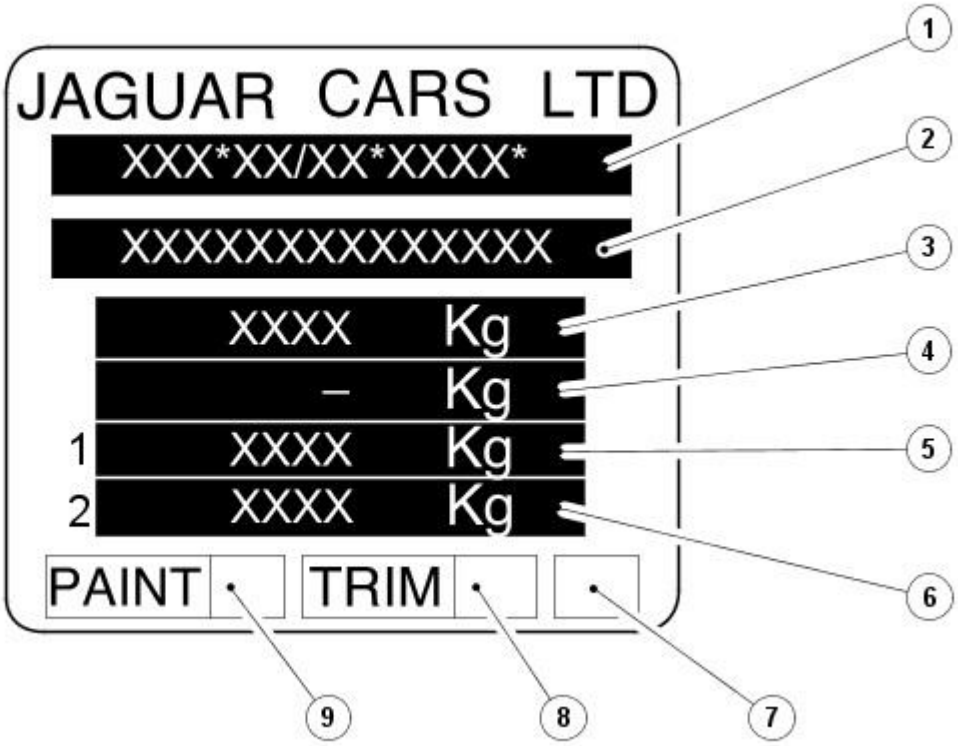


E36533

| Item | Part Number | Description |
|---|---|---|
| 1 | — | Whole Vehicle Type Approval (WVTA) |
| 2 | — | VIN |
| 3 | — | Gross vehicle weight |
| 4 | — | Gross train weight |
| 5 | — | Maximum permitted front axle loading |
| 6 | — | Maximum permitted rear axle loading |
| 7 | — | Date of manufacture |
| 8 | — | Interior trim code |
| 9 | — | Paint code |

VIN Label (North America)

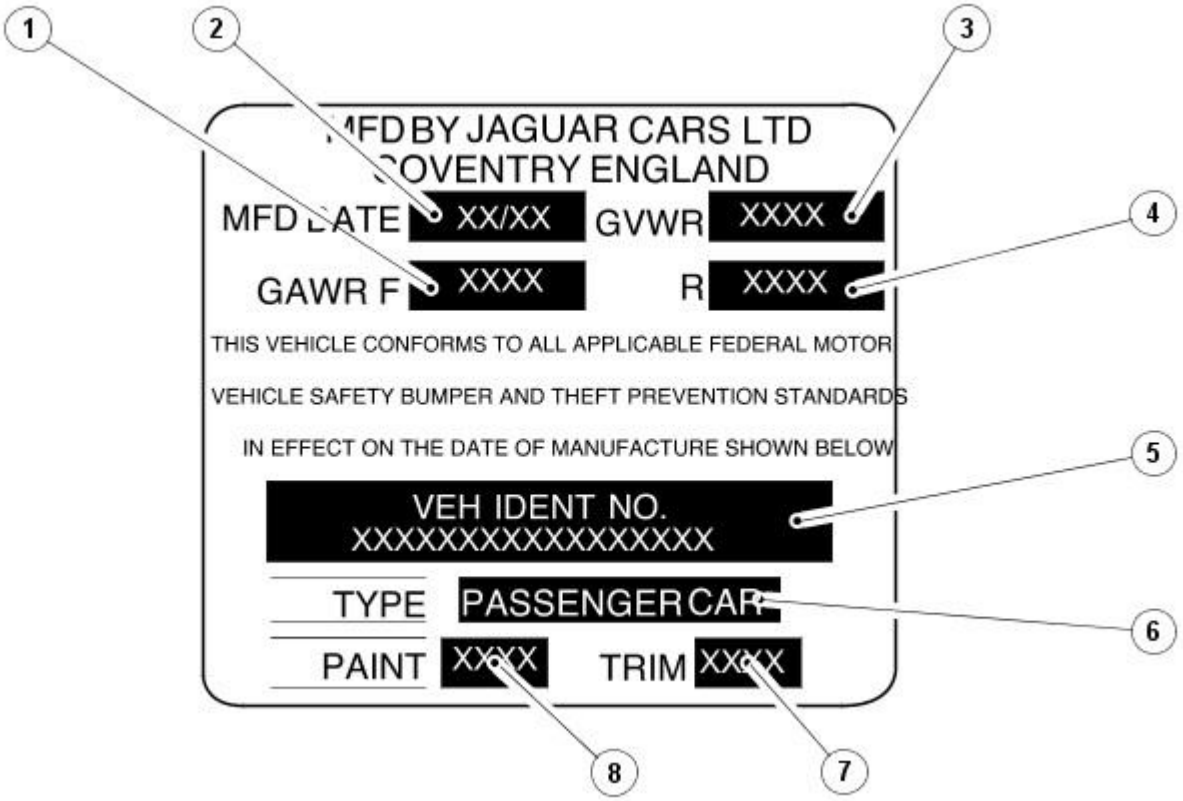


E36534

| Item | Part Number | Description |
|---|---|---|
| 1 | — | Maximum permitted front axle loading |
| 2 | — | Date of manufacture |
| 3 | — | Gross vehicle weight |
| 4 | — | Maximum permitted rear axle loading |
| 5 | — | VIN |

GETtheMANUALS.org

| | | |
|---|---|---|
| 6 | — | Type |
| 7 | — | Interior trim code |
| 8 | — | Paint code |

VIN Label (Saudi Arabia and Gulf States)

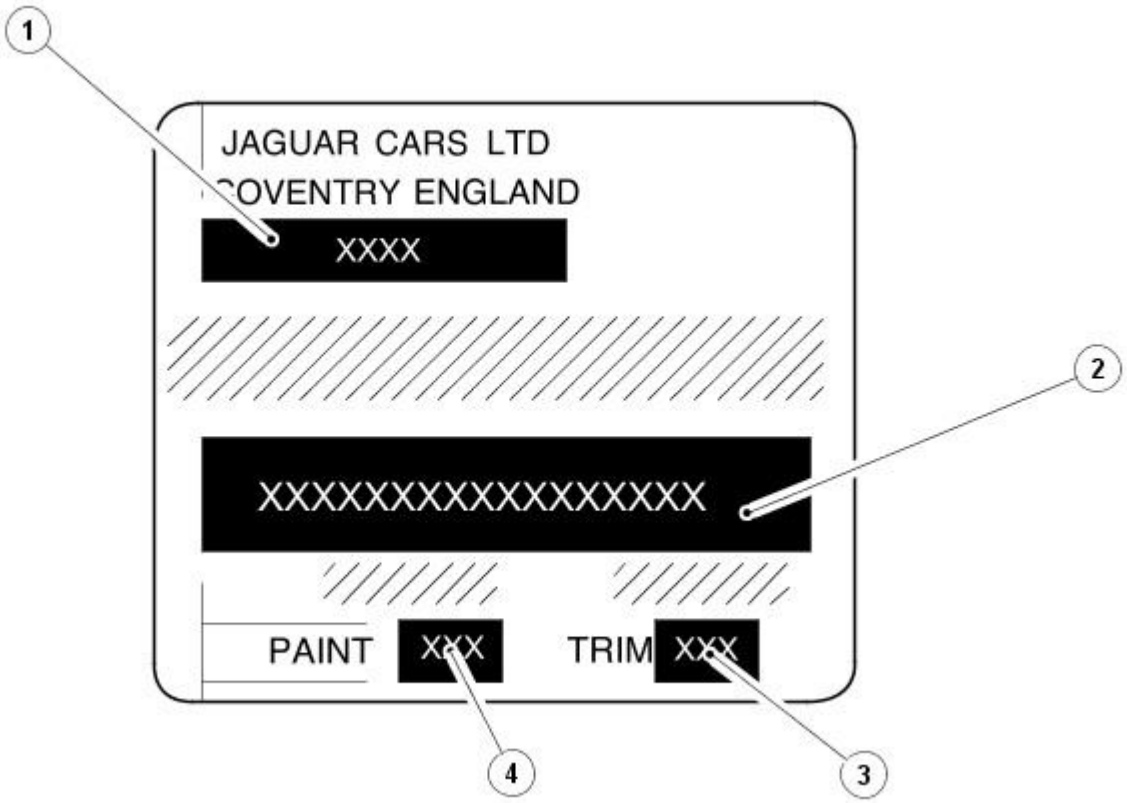


E36535

| Item | Part Number | Description |
|---|---|---|
| 1 | — | Date of manufacturer |
| 2 | — | VIN |
| 3 | — | Interior trim code |
| 4 | — | Paint code |

VIN Label (Canada)

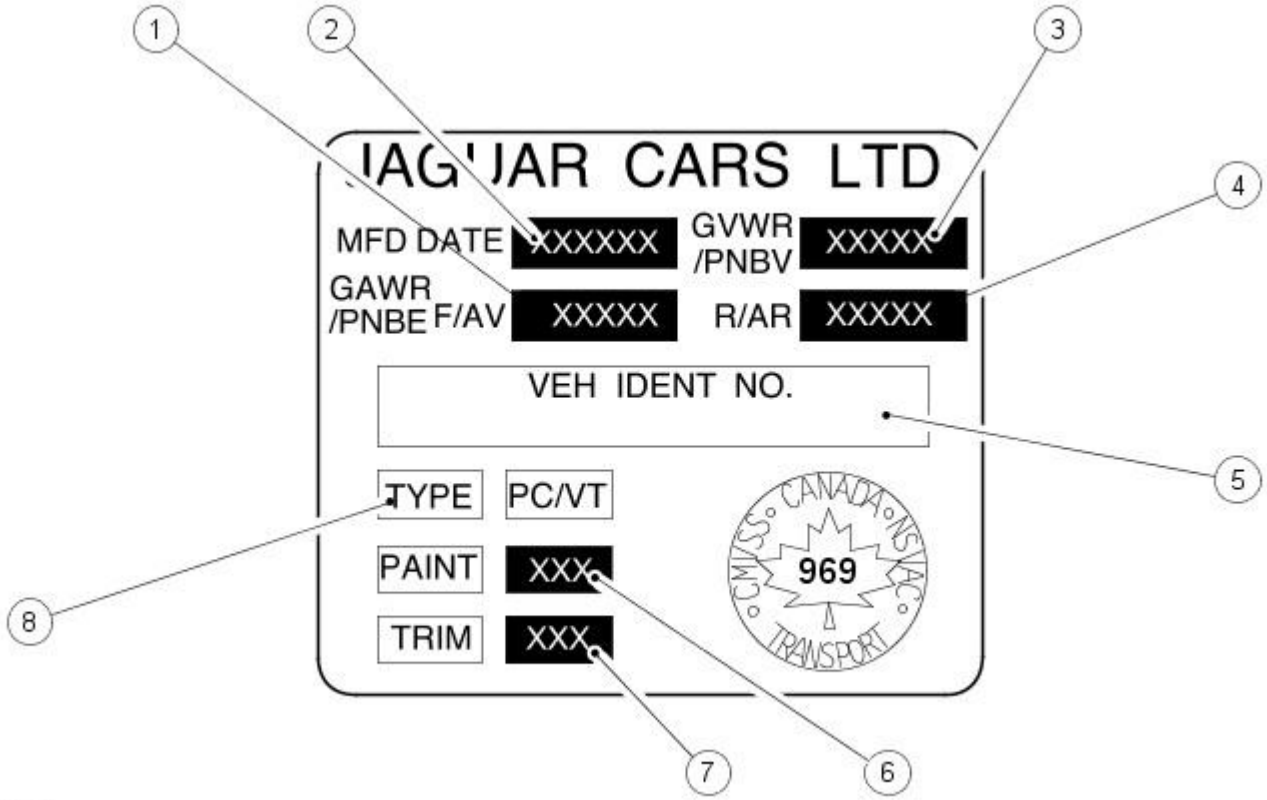


E36536

| Item | Part Number | Description |
|---|---|---|
| 1 | — | Maximum permitted front axle loading |
| 2 | — | Date of manufacturer |
| 3 | — | Maximum permitted rear axle loading |
| 4 | — | Gross vehicle weight |
| 5 | — | VIN |
| 6 | — | Paint code |

GETtheMANUALS.org

| | | |
|---|---|---|
| 7 | — | Interior trim code |
| 8 | — | Type |

## VIN Label (China)

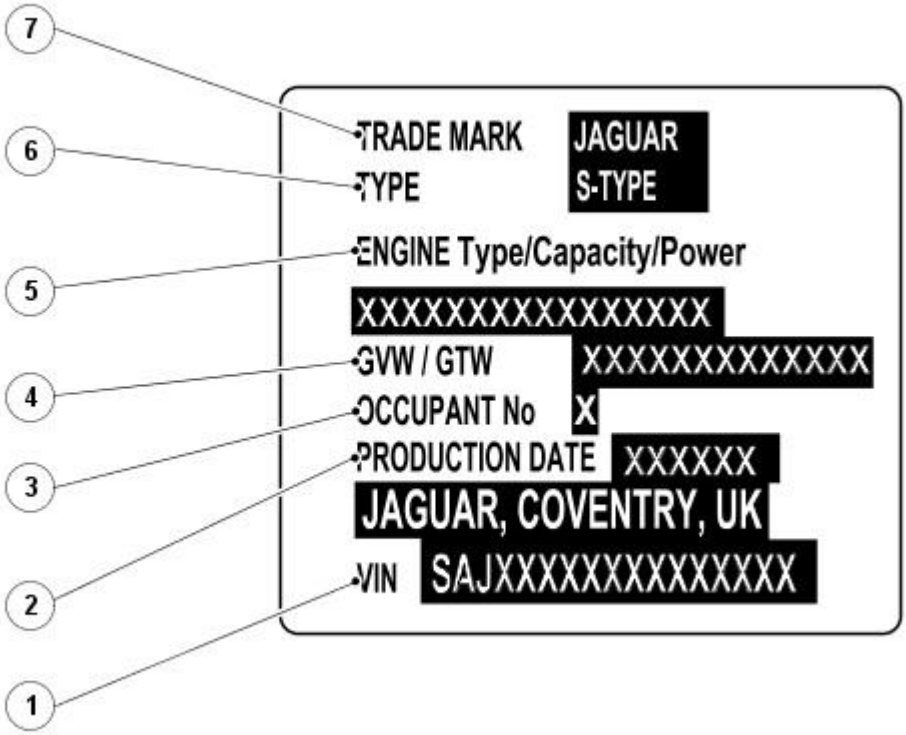


E63051

| Item | Part Number | Description |
|---|---|---|
| 1 | — | VIN |
| 2 | — | Date of manufacturer |
| 3 | — | Occupant number |
| 4 | — | Gross vehicle weight/Gross train weight |
| 5 | — | Engine specification |
| 6 | — | Vehicle type |
| 7 | — | Trade mark |

## Automatic Transmission Number

The serial number of the transmission unit is displayed on a metal label or bar code (if equipped) attached to the transmission casing.

## Manual Transmission Number

The serial number of the transmission unit is stamped into the bottom of the clutch housing.

## Engine Number - 3.0L

The engine number is contained on a bar code label on the front cover and is also stamped in the cylinder block casting on the left-hand side of the engine below the engine mounting.

## Engine Number - 2.7L Diesel

The serial number is stamped on an engine web on the right-hand side of the cylinder block behind the engine mounting.

## Engine Number - 3.5L, 4.2L and 4.2L Supercharged

The serial number is stamped on an engine web on the left-hand side of the cylinder block behind the engine mounting. The emission code is also located here, on the transmission flange.

GETtheMANUALS.org

# Jacking and Lifting - Jacking

Description and Operation

## Safety Precautions

WARNING: The jack provided with the vehicle is intended to be used in an emergency for changing a deflated tire. To avoid damage to the vehicle, never use the jack to raise the vehicle for any other purpose. Refer to the Driver Handbook when using the jack supplied with the vehicle. Failure to follow these instructions may result in personal injury.

The following safety precautions must be observed when raising the vehicle to carry out service operations:

- Never rely on a jack alone to support a vehicle. Always use suitable vehicle stands to provide rigid support.
- When working beneath a vehicle, whenever possible use a vehicle hoist instead of a jack and vehicle stands.
- Make sure that the vehicle is standing on firm, level ground before using a jack.
- Do not rely on the parking brake alone; chock the wheels and put the automatic transmission into Park if possible.
- Check that any lifting equipment used has adequate capacity for the load being lifted and is in correct working order.

GETtheMANUALS.org

# Jacking and Lifting - Lifting

Description and Operation

## Lifting Points—Twin-Post Hoist and Floor Jack

• CAUTIONS:

Do not allow the hoist adapters to contact the steering linkage, suspension arms, stabilizer bar, rear subframe stabilizer brackets or to compress the lower suspension arm stabilizer bar insulator. Damage to the suspension, exhaust and steering linkage components may occur if care is not exercised when positioning the hoist adapters of two-post hoists prior to lifting the vehicle.

Never use the differential housing as a lift point. Damage to the differential housing and cover may occur.

When using a floor jack, a cushioned pad must be utilized to avoid body damage.

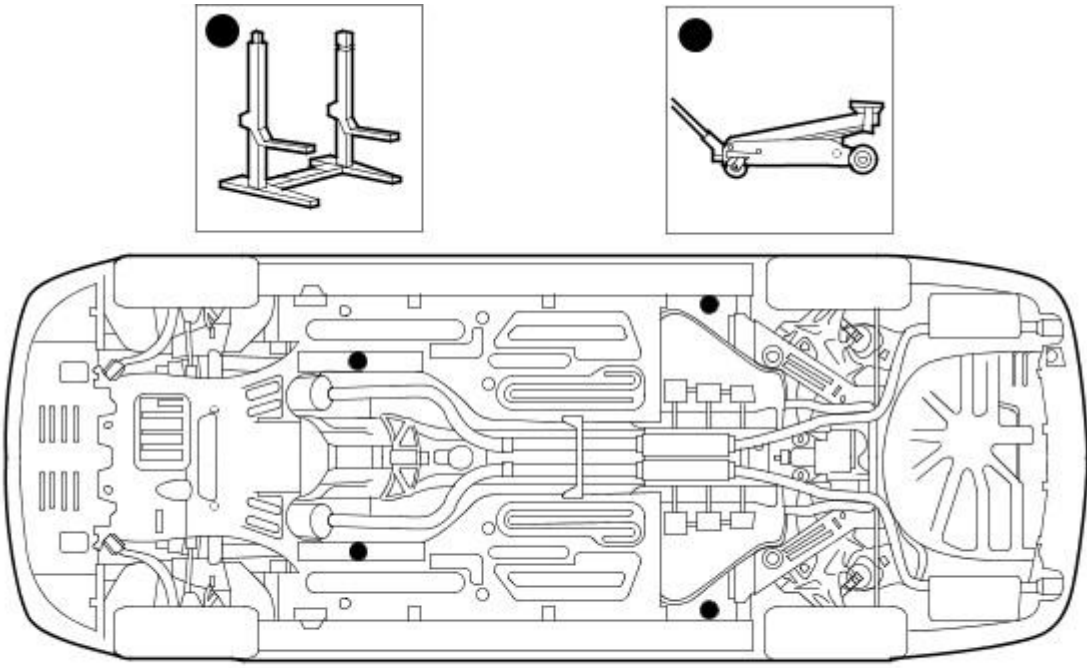

E30331

## Vehicle Support Points

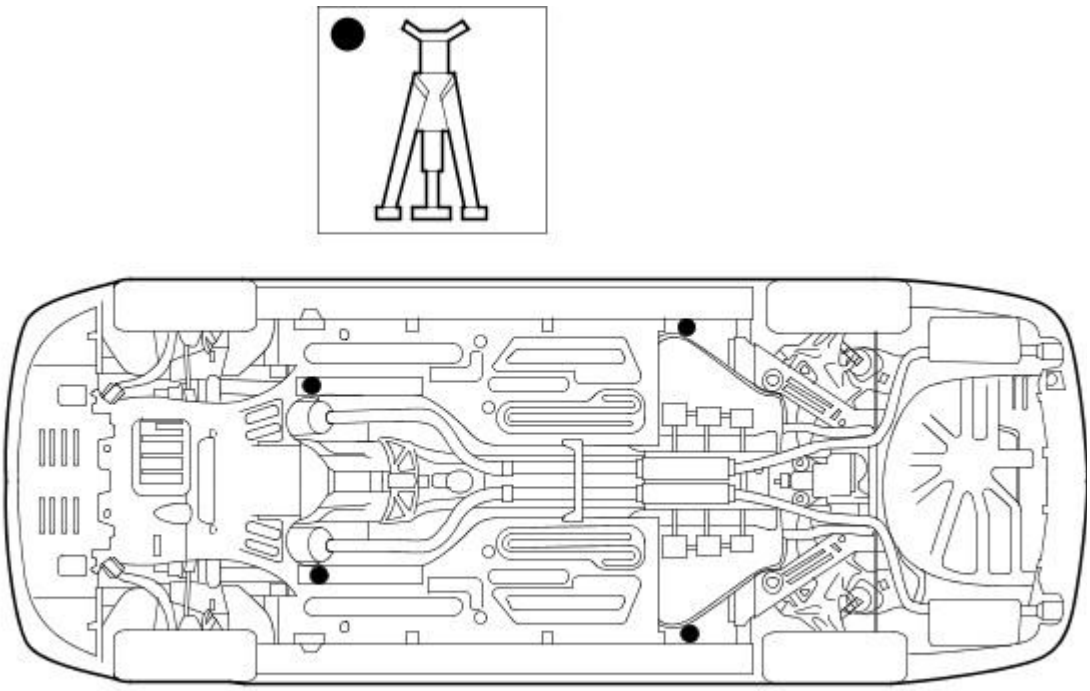

E30332

GETtheMANUALS.org

## Vehicle Recovery

• NOTE: Prior to vehicle recovery, make sure the vehicle keys are available and the security system is disarmed.

Vehicle recovery methods are:

- By flat-bed transporter.
- By rear suspended tow.
- By rear suspended tow.

### Transporter or Trailer Recovery

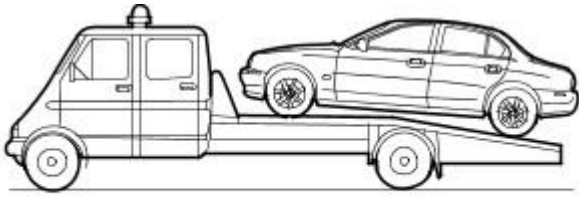

VUJ0001116

When the vehicle is being recovered by transporter or trailer:

- The parking brake must be applied and the wheels chocked.
- The gear selector lever must be in Neutral. Do not select Park on automatic transmission vehicles, as the parking lock mechanism may be damaged by the forward and backward rocking motion of the vehicle.
- The vehicle must be securely tied down to the transporter or trailer.

### Rear Suspended Tow

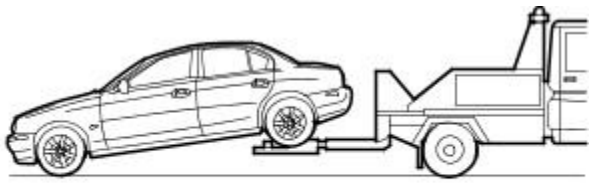

VUJ0001117

When the vehicle is being recovered by rear suspended tow:

- The ignition key must be removed from the ignition switch to lock the steering.
- The rear wheels must be correctly positioned in the lifting cradle and securely tied down.

### Emergency Towing

WARNING: If the engine is not running, the steering will become heavy and the force necessary to effectively apply the brakes will be greatly increased.

CAUTION: A vehicle with a defective transmission must be towed by rear suspended tow.

When the vehicle is being towed on its own wheels:

- Local regulations for the towing of vehicles must be followed. In some countries the registration number of the towing vehicle and an 'On Tow' sign or warning triangle must be displayed at the rear of the towed vehicle.
- The gear selector lever must be in Neutral.
- The ignition switch must be in position II to release the steering lock and make the direction indicators, horn and stop lamps operate.
- A distance of 0,8 km (0.5 mile) must not be exceeded.
- A speed of 48 km/h (30 mph) must not be exceeded.
- The tow rope must be attached to the front towing eye.

GETtheMANUALS.org

Published: 11-May-2011

# Noise, Vibration and Harshness - Noise, Vibration and Harshness (NVH)

Description and Operation

Noise, vibration and harshness (NVH) is becoming more important as vehicles become more sophisticated and passenger comfort levels increase. This section is designed to aid in the diagnosis, testing and repair of NVH concerns.

- Noise is defined as sounds not associated with the operation of passenger compartment equipment that interface with customer satisfaction.
- Vibration is defined as impulses felt by the customer that are not caused by road surface changes.
- Harshness is a ride quality issue where the customer feels that the vehicle response to the road surface is sharply transmitted to the customer.

## Diagnostic Theory

Diagnosis is more than just following a series of interrelated steps in order to find the solution to the specific condition. It is a way of looking at systems that are not functioning the way they should and finding out why. Also it is knowing how the system should work and whether it is working correctly.

There are basic rules for diagnosis. If these rules are followed, the cause of the condition is usually found the first time through the system.

## Know the System

- Know how the parts go together.
- Know how the system operates as well as its limits and what happens when the system goes wrong.
- Sometimes this means checking the system against one that is known to be working correctly.

## Know the History of the System

A clue in any one of these areas may save time:

- How old or new is the system?
- What kind of treatment has it had?
- Has it been repaired in the past in such a manner that might relate to the present condition?
- What is the repair history?

## Know the History of the Condition

- Did it start suddenly or appear gradually?
- Was it related to some other occurrence such as a collision or previous part renewal?
- Know how the condition made itself known; it may be an important clue to the cause.

## Know the Probability of Certain Conditions Developing

- Look for the simple rather than the complex.
- For example:
  - Electrical conditions usually occur at connections rather than components.
  - An engine no-start is more likely to be caused by a loose wire or small adjustment rather than a sheared-off camshaft.
- Know the difference between impossible and improbable. Certain failures in a system can be improbable but still happen.
- New parts are just that, new. It does not mean they are always good functioning parts.

## Do Not Cure the Symptom and Leave the Cause

Lowering the pressure in a front tire may correct the condition of a vehicle leaning to one side, but it does not correct the original condition.

## Be Positive the Cause is Found

- Double check the findings.
- What caused a worn component?
- A loose transmission or engine mount could indicate that other mounts are also loose.

## Diagnostic Charts

Charts are a simple way of expressing the relationship between basic logic and a physical system of components. They help discover the cause of a condition in the least time. Diagnostic charts combine many areas of diagnosis into one visual display:

- probability of certain things occurring in a system
- speed of checking certain components or functions before others
- simplicity of carrying out certain tests before others
- elimination of checking huge portions of a system by carrying out simple tests
- certainty of narrowing down the search to a small portion before carrying out in-depth testing

The fastest way to find a condition is to work with the tools that are available. This means working with proven diagnostic charts and the correct special equipment for the system.

GETtheMANUALS.org

# Noise, Vibration and Harshness - Noise, Vibration and Harshness (NVH)

Diagnosis and Testing

## Inspection and Verification

1. **1.** Verify the customer's concerns by operating the vehicle to duplicate the condition.
2. **2.** Visually inspect the vehicle to determine any obvious cause(s) of the concern(s).
3. **3.** If the inspection reveals obvious causes that can be readily identified, repair as necessary.
4. **4.** If the concern(s) remains after the inspection, determine the symptom(s) and go to the Symptom Chart.

## How To Use This Diagnostic Procedure Section

- Noise, vibration and harshness (NVH) concerns have become more important as vehicles have become more sensitive to these vibrations. This section is designed as an aid to identifying these situations.
- The section provides diagnostic procedures based on symptoms. If the condition occurs at high speed, for instance, the most likely place to start is under High Speed Shake.
- The road test procedure will tell how to sort the conditions into categories and how to tell a vibration from a shake.
- A series of Road Test Quick Checks is provided to make sure that a cause is either pinpointed or eliminated.
- Name the condition, proceed to the appropriate section and locate the correct diagnosis. When the condition is identified, the job is partly done.
- Follow the diagnostic procedure as outlined.
- Quick Checks are described within the step, while more involved tests and adjustments are outlined in General Procedures.
- Always follow each step exactly and make notes to recall important findings later.

## Customer Interview

The road test and customer interview (if available) provide information that will help identify the concerns and will provide direction to the correct starting point for diagnosis.

## Identify the Condition

NVH problems usually occur in a number of areas:

- Tires
- Engine accessories
- Suspension
- Driveline
- Air leakage (wind noise)
- Squeaks and rattles
- Heating Ventilation and Air Conditioning (HVAC)
- Electrical (e.g. motor noise)
- Transmission
- Engine

It is important, therefore, that an NVH concern be isolated into its specific area(s) as soon as possible. The easiest and quickest way to do this is to carry out the Road Test as outlined.

## Noise Diagnostic Procedure

### Non-Axle Noise

The five most important sources of non-axle noise are exhaust, tires, roof racks, trim and mouldings, and transmission.

Therefore, make sure that none of the following conditions are the cause of the noise before proceeding with a driveline teardown and diagnosis.

- In certain conditions, the pitch of the exhaust may sound very much like gear noise. At other times, it can be mistaken for a wheel bearing rumble.
- Tires, especially snow tires, can have a high pitched tread whine or roar, similar to gear noise. Radial tires, to some degree, have this characteristic. Also, any non-standard tire with an unusual tread construction may emit a roar or whine type noise.
- Trim and mouldings can also cause whistling or a whining noise.
- Clunk may be a metallic noise heard when the automatic transmission is engaged in reverse or drive, or it may occur when the throttle is applied or released. It is caused by backlash somewhere in the driveline.
- Bearing rumble sounds like marbles being tumbled. This condition is usually caused by a damaged wheel bearing.

### Noise Conditions

- Gear noise is typically a howling or whining due to gear damage or incorrect bearing preload. It can occur at various speeds and driving conditions, or it can be continuous.
- Chuckle is a particular rattling noise that sounds like a stick against the spokes of a spinning bicycle wheel. It occurs while decelerating from 64 km/h (40 miles/h) and can usually be heard all the way to a stop. The frequency varies with vehicle speed.
- Knock is very similar to chuckle, though it may be louder and occurs on acceleration or deceleration. The teardown will disclose what has to be corrected.

Check and rule out tires, exhaust and trim items before disassembling the transmission to diagnose and correct gear noise.

The noises described under Road Test usually have specific causes that can be diagnosed by observation as the unit is disassembled. The initial clues are the type of noise heard on the road test and the driving conditions.

### Vibration Conditions

• NOTE: New Constant Velocity (CV) joints should not be installed unless disassembly and inspection revealed unusual wear.

Clicking, popping or grinding noises may be caused by the following:

GETtheMANUALS.org

- Cut or damaged CV joint boots resulting in inadequate or contaminated lubricant in the outboard or inboard CV joint bearing

housings
- Loose CV joint boot clamps
- Another component contacting the rear drive half shaft
- Worn, damaged or incorrectly installed wheel bearing, suspension or brake component

Vibration at highway speeds may be caused by the following:

- Out-of-balance front or rear wheels
- Out-of-round tires
- Driveline imbalance
- Driveline run-out (alignment)

• NOTE: Rear drive half shafts are not balanced and do not contribute to rotational vibration disturbances.

Shudder or vibration during acceleration may be caused by the following:

- Excessively worn or damaged outboard or inboard CV joint bearing housing
- Excessively high CV joint operating angles caused by incorrect ride height. Check ride height, verify correct spring rate and check items under Inoperative Conditions

## Leakage Conditions

1. **1.** Inspect the CV joint boots for evidence of cracks, tears or splits.
2. **2.** Inspect the underbody for any indication of grease splatter in the vicinity of the rear drive half shaft, outboard and inboard CV joint boot locations, which is an indication of CV joint boot or CV joint boot clamp damage.
3. **3.** Inspect the inboard CV joint bearing housing seal for leakage.

## Inoperative Conditions

If a CV joint or rear drive half shaft pull-out occurs, check the following:

- Suspension components for correct location, damage or wear
- Bushings for wear
- Subframe for damage
- Bent or worn components:
  - Stabilizer bar link
  - Left-hand rear suspension lower arm and bushing
  - Right-hand rear suspension lower arm and bushing
  - Rear wheel hub and rear drive half shaft

## Road Test

A gear-driven unit will produce a certain amount of noise. Some noise is acceptable and may be audible at certain speeds or under various driving conditions as on a newly paved blacktop road. The slight noise is in no way detrimental and must be considered normal.

The road test and customer interview (if available) provide information needed to identify the condition and give direction to the correct starting point for diagnosis.

1. **1.** Make notes throughout the diagnosis routine. Make sure to write down even the smallest piece of information, because it may turn out to be the most important.
2. **2.** Do not touch anything until a road test and a thorough visual inspection of the vehicle have been carried out. Leave the tire pressures and vehicle load just where they were when the condition was first observed. Adjusting tire pressures, vehicle load or making other adjustments may reduce the conditions intensity to a point where it cannot be identified clearly. It may also inject something new into the system, preventing correct diagnosis.
3. **3.** Make a visual inspection as part of the preliminary diagnosis routine, writing down anything that does not look right. Note tire pressures, but do not adjust them yet. Note leaking fluids, loose nuts and bolts, or bright spots where components may be rubbing against each other. Check the luggage compartment for unusual loads.
4. **4.** Road test the vehicle and define the condition by reproducing it several times during the road test.
5. **5.** Carry out the Road Test Quick Checks as soon as the condition is reproduced. This will identify the correct diagnostic procedure. Carry out the Road Test Quick Checks more than once to verify they are providing a valid result. Remember, the Road Test Quick Checks may not tell where the concern is, but they will tell where it is not.

## Road Test Quick Checks

1. **1.** 24-80 km/h (15-50 miles/h): With light acceleration, a moaning noise is heard and possibly a vibration is felt in the front floor pan. It is usually worse at a particular engine speed and at a particular throttle setting during acceleration at that speed. It may also produce a moaning sound, depending on what component is causing it. Refer to Tip-In Moan in the Symptom Chart.
2. **2.** Acceleration/Deceleration: With slow acceleration and deceleration, a shake is sometimes noticed in the steering wheel/column, seats, front floor pan, front door trim panel or front end sheet metal. It is a low frequency vibration (around 9-15 cycles per second). It may or may not be increased by applying brakes lightly. Refer to Idle Boom/Shake/Vibration in the Symptom Chart.
3. **3.** High Speed: A vibration is felt in the front floor pan or seats with no visible shake, but with an accompanying sound or rumble, buzz, hum, drone or booming noise. Coast with the clutch pedal depressed or shift control selector lever in neutral and engine idling. If vibration is still evident, it may be related to wheels, tires, front disc brake discs, wheel hubs or front wheel bearings. Refer to High Speed Shake in the Symptom Chart.
4. **4.** Engine rpm Sensitive: A vibration is felt whenever the engine reaches a particular rpm. It will disappear in neutral coasts. The vibration can be duplicated by operating the engine at the problem rpm while the vehicle is stationary. It can be caused by any component, from the accessory drive belt to the clutch or torque converter which turns at engine speed when the vehicle is stopped. Refer to High Speed Shake in the Symptom Chart.
5. **5.** Noise and Vibration While Turning: Clicking, popping, or grinding noises may be due to the following:

- Worn, damaged, or incorrectly installed front wheel bearing
- Worn or damaged incorrectly installed rear drive half shaft

GETtheMANUALS.org

## Road Conditions

An experienced technician will always establish a route that will be used for all NVH diagnosis road tests. The road selected should be reasonably smooth, level and free of undulations (unless a particular condition needs to be identified). A smooth asphalt road that allows driving over a range of speeds is best. Gravel or bumpy roads are unsuitable because of the additional road noise produced. Once the route is established and consistently used, the road noise variable is eliminated from the test results.

• NOTE: Some concerns may be apparent only on smooth asphalt roads.

If a customer complains of a noise or vibration on a particular road and only on a particular road, the source of the concern may be the road surface. If possible, try to test the vehicle on the same type of road.

## Vehicle Preparation

Carry out a thorough visual inspection of the vehicle before carrying out the road test. Note anything which is unusual. Do not repair or adjust any condition until the road test is carried out, unless the vehicle is inoperative or the condition could pose a hazard to the technician.

After verifying the condition has been corrected, make sure all components removed have been installed.

## Lift Test

After a road test, it is sometimes useful to do a similar test on a lift.

When carrying out the high-speed shake diagnosis or engine accessory vibration diagnosis on a lift, observe the following precautions:

WARNING: If only one drive wheel is allowed to rotate, speed must be limited to 55 km/h (35 miles/h) indicated on the speedometer since actual wheel speed will be twice that indicated on the speedometer. Speed exceeding 55 km/h (35 miles/h) or allowing the drive wheel to hang unsupported could result in tire disintegration, differential failure, constant velocity joint and driveshaft failure, which could cause serious personal injury and extensive vehicle damage. Failure to follow these instructions may result in personal injury.

CAUTION: The suspension should not be allowed to hang free. When the CV joint is run at a very high angle, extra vibration as well as damage to the seals and joints can occur.

The rear suspension lower arm should be supported as far outboard as possible. To bring the vehicle to its correct ride height, the full weight of the vehicle should be supported in the rear by floor jacks.
REFER to Section 100-02 Jacking and Lifting.

1. **1.** Raise and support the vehicle.
   REFER to Section 100-02 Jacking and Lifting.
2. **2.** Explore the speed range of interest using the Road Test Quick Checks as previously described.
3. **3.** Carry out a coast down in neutral. If the vehicle is free of vibration when operating at a steady indicated speed and behaves very differently in drive and coast, a transmission concern is likely.

Note, however, that a test on the lift may produce different vibrations and noises than a road test because of the effect of the lift. It is not unusual to find vibrations on the lift that were not found in the road test. If the condition found on the road can be duplicated on the lift, carrying out experiments on the lift may save a great deal of time.

## Symptom Chart

**Symptom Chart**

| Symptom | Possible Sources | Action |
|---|---|---|
| High-speed shake | * Wheel end vibration.<br>* Engine/transmission.<br>* Driveline. | * GO to Pinpoint Test A. |
| Tip-in moan | * Air cleaner.<br>* Power steering (PS).<br>* Powertrain.<br>* Engine mounts.<br>* Exhaust system. | * GO to Pinpoint Test B. |
| Idle boom/shake/vibration, or shudder | * Cable(s)/hoses(s).<br>* Engine mounts.<br>* Exhaust system.<br>* Belt/pulleys. | * GO to Pinpoint Test C. |
| Wheel end vibration analysis | * Suspension/rear drive half shaft and CV joints.<br>* Tires/wheels.<br>* Wheel bearings.<br>* Rear wheel drive half shaft joint boots. | * GO to Pinpoint Test D. |
| Non-axle noise | * Trim/mouldings.<br>* A/C system.<br>* Accessories. | * GO to Pinpoint Test E. |

## Pinpoint Tests

• NOTE: These Pinpoint Tests are designed to take the technician through a step-by-step diagnosis procedure to determine the cause of a condition. It may not always be necessary to follow the chart to its conclusion. Carry out only the Pinpoint Test steps necessary to correct the condition. Then check operation of the system to make sure the condition is corrected.

After verifying that the condition has been corrected, make sure all components removed have been installed.

| PINPOINT TEST A : HIGH-SPEED SHAKE | |
|---|---|
| **TEST CONDITIONS** | **DETAILS/RESULTS/ACTIONS** |
| **A1: NEUTRAL COAST** | |
| | 1 Carry out the neutral coast test. |

GETtheMANUALS.org

| | |
|---|---|
| | Does the vibration disappear during the neutral coast test?<br>**Yes**<br>CHECK and INSTALL new engine/transmission mounts as necessary. REPEAT Road Test as outlined.<br>**No**<br>GO to D1. |

| PINPOINT TEST B : TIP-IN MOAN | |
|---|---|
| **TEST CONDITIONS** | **DETAILS/RESULTS/ACTIONS** |
| **B1: CHECK THE AIR CLEANER** | |
| | 1 Check the air cleaner.<br>● Check the air cleaner, inlet tube, outlet tube, resonators and all other components associated with the air induction system for correct installation and tightness of all connections. |
| | Are the components OK?<br>**Yes**<br>GO to B2.<br>**No**<br>CORRECT the condition. REPEAT the Road Test as outlined. |
| **B2: CHECK THE EXHAUST SYSTEM** | |
| | 1 Carry out the exhaust system neutralizing procedure in this section. |
| | Is the exhaust system OK?<br>**Yes**<br>GO to B3.<br>**No**<br>REPAIR as necessary. RESTORE vehicle. REPEAT the Road Test as outlined. |
| **B3: CHECK THE POWER STEERING** | |
| | 1 Remove the auxiliary drive belt and test for tip-in moan. |
| | Is the tip-in moan OK?<br>**Yes**<br>REPAIR the power steering as necessary. For additional information, refer to Section 211-02 Power Steering<br>**No**<br>CHECK and INSTALL new engine/transmission mounts as necessary. REPEAT Road Test as outlined. |

| PINPOINT TEST C : IDLE BOOM/SHAKE/VIBRATION/SHUDDER | |
|---|---|
| **TEST CONDITIONS** | **DETAILS/RESULTS/ACTIONS** |
| **C1: CHECK CABLE/HOSES** | |
| | 1 Check the engine compartment for any component that may be grounding between the engine and body or chassis. Example: air conditioning (A/C) hoses. |
| | Are the components OK?<br>**Yes**<br>GO to C2.<br>**No**<br>CORRECT the condition. REPEAT the Road Test as outlined. |
| **C2: CHECK THE STEERING WHEEL DAMPER.** | |
| | 1 Remove the driver air bag module and visually inspect the steering wheel damper for correct installation or any touch condition. |
| | Is the damper OK?<br>**Yes**<br>GO to C3.<br>**No**<br>CORRECT the condition. REPEAT the Road Test as outlined. |
| **C3: CHECK THE COOLING RADIATOR** | |
| | 1 Check the engine cooling radiator mountings and bushings for security and condition. Check the radiator installation for any component that may have a touch condition. |
| | Are the installation and bushings OK?<br>**Yes**<br>GO to C4.<br>**No**<br>CORRECT the condition. REPEAT the Road Test as outlined. |
| **C4: CHECK THE EXHAUST SYSTEM** | |
| | 1 Carry out the exhaust system neutralizing procedure in this section. |
| | Is the exhaust system OK?<br>**Yes**<br>CHECK and INSTALL new engine/transmission mounts as necessary. REPEAT Road Test as outlined.<br>**No**<br>REPAIR as necessary. REPEAT Road Test. |

| PINPOINT TEST D : WHEEL END VIBRATION ANALYSIS | |
|---|---|
| **TEST CONDITIONS** | **DETAILS/RESULTS/ACTIONS** |
| **D1: INSPECT THE TIRES** | |
| | 1 Inspect the tires.<br>● Raise and support the vehicle.<br>REFER to Section 100-02 Jacking and Lifting.<br>● Inspect the tires for:<br>● Correct tire size<br>● Tire/wheel compatibility<br>● Wear or damage<br>● Tire beads correctly seated |

GETtheMANUALS.org

| | |
|---|---|
| | Are the tires OK?<br>**Yes**<br>GO to D2.<br>**No**<br>INSPECT the wheels. For additional information, refer to Section 204-00 Suspension System - General Information. |
| **D2: INSPECT WHEEL BEARINGS** | |
| | 1 Inspect the wheel bearings.<br>REFER to Section 204-00 Suspension System - General Information. |
| | Are the wheel bearings OK?<br>**Yes**<br>GO to D3.<br>**No**<br>REPAIR as necessary. REPEAT the Road Test as outlined. |
| **D3: INSPECT THE CONSTANT VELOCITY (CV) JOINT BOOTS** | |
| | 1 Inspect the CV joint boots.<br>● Spin the rear tire by hand<br>● Inspect for evidence of cracks, tears, splits or splattered grease |
| | Are the CV joint boots OK?<br>**Yes**<br>GO to D4.<br>**No**<br>REPAIR as necessary. REPEAT the Road Test as outlined. |
| **D4: INSPECT WHEEL AND TIRE RUNOUT** | |
| | 1 Inspect the wheel and tire runout.<br>● Carry out the Wheel and Tire Check procedure.<br>REFER to Section 204-04 Wheels and Tires. |
| | Is the wheel and tire runout OK?<br>**Yes**<br>Balance the wheels and tires. Refer to the wheel balance equipment manufacturers instructions.<br>**No**<br>REPAIR as necessary.<br>REFER to Section 204-04 Wheels and Tires.<br>REPEAT the Road Test as outlined. |

| **PINPOINT TEST E : NON-AXLE NOISE** | |
|---|---|
| **TEST CONDITIONS** | **DETAILS/RESULTS/ACTIONS** |
| **E1: INSPECT VEHICLE TRIM** | |
| | 1 Check the grille and trim mouldings to see if they are the source of the noise. |
| | Are the vehicle trim components causing the noise?<br>**Yes**<br>INSTALL new trim or REPAIR as necessary.<br>REFER to Section 501-08 Exterior Trim and Ornamentation.<br>**No**<br>GO to E2. |
| **E2: CHECK THE A/C SYSTEM FOR NOISE** | |
| | 1 Check the A/C system components for noise by turning the A/C system on and off. |
| | Is the A/C system causing the noise?<br>**Yes**<br>Diagnose the A/C system.<br>REFER to Section 412-00 Climate Control System - General Information.<br>**No**<br>GO to E3. |
| **E3: CHECK NON-FACTORY ACCESSORIES** | |
| | 1 Inspect any accessories for being the source of the noise. Example: grounding body-to-frame, antennas, visors, bug deflectors and fog lights? |
| | Are the accessories the cause of the noise?<br>**Yes**<br>ADJUST, REPAIR or INSTALL new accessories or fasteners as required.<br>**No**<br>Verify the customer concern |

GETtheMANUALS.org

# Noise, Vibration and Harshness - Exhaust System Neutralizing

General Procedures

1. Loosen the muffler inlet pipe and resonator pipe to exhaust manifold fasteners at the flanges and the muffler inlet connection.
2. Place a stand to support the muffler parallel to the vehicle frame with the muffler pipe bracket free of stress.
3. Tighten the muffler connection.
4. Position the exhaust pipes to the manifolds and tighten. Make sure that the catalytic converter and heat shield do not contact the frame rails.
5. With the complete exhaust system tight (and cooled) the rear hanger insulator should be angled forward, to allow the system to expand rearward when heated during normal running

GETtheMANUALS.org

# Suspension System - General Information -

**Vehicle Ride Height**

| Description | | Measurement | |
|---|---|---|---|
| Description | Front / Rear | Showroom mm (inch) | Curb mm (inch) |
| 2.5L or 3.0L, vehicles with manual transmission and with adaptive damping | Front | 389 (15.31) | 387 (15.23) |
| | Rear | 384 (15.11) | 378 (14.88) |
| 2.5L or 3.0L, vehicles with manual transmission and without adaptive damping | Front | 392 (15.43) | 390 (15.35) |
| | Rear | 389 (15.31) | 382 (15.03) |
| 2.5L or 3.0L, vehicles with automatic transmission and with adaptive damping | Front | 389 (15.31) | 387 (15.23) |
| | Rear | 384 (15.11) | 378 (14.88) |
| 2.5L or 3.0L, vehicles with automatic transmission and without adaptive damping | Front | 392 (15.43) | 390 (15.35) |
| | Rear | 389 (15.31) | 382 (15.03) |
| 4.2L, vehicles without supercharger and with adaptive damping | Front | 387 (15.23) | 386 (15.19) |
| | Rear | 384 (15.11) | 378 (14.88) |
| 4.2L, vehicles without supercharger and without adaptive damping | Front | 390 (15.35) | 388 (15.27) |
| | Rear | 389 (15.31) | 382 (15.03) |
| 4.2L, vehicles with supercharger and with adaptive damping | Front | 387 (15.23) | 386 (15.19) |
| | Rear | 384 (15.11) | 378 (14.88) |

- Ride height is measured from the center of the wheel to the apex of the wheel arch, through the wheel center line.
- Showroom - with all fluids at full and 9 liters (9.5 US quarts) of fuel.
- Curb - with all fluids at full and a full tank of fuel.
- All figures quoted assume ± 15 mm (0.59 inch) anticipated build variance and condition.

**Wheel Alignment - Front Camber**

| Description | | Left-hand | | Right-hand | | Balance*1 | |
|---|---|---|---|---|---|---|---|
| Markets | Degrees / Minutes | Nominal | Tolerance | Nominal | Tolerance | Nominal | Tolerance |
| All right-hand drive and Japan | Degrees/Minutes | -0° 36' | ±30' | -0° 12' | ±30' | 0° 24' | ±42' |
| | Decimal Degrees | -0.6° | ±0.5° | -0.2° | ±0.5° | 0.4° | ±0.7° |
| USA, Canada, Mexico and Dominican Republic (Federal) | Degrees/Minutes | -0° 12' | ±30' | -0° 33' | ±30' | -0° 21' | ±42' |
| | Decimal Degrees | -0.2° | ±0.5° | -0.55° | ±0.5° | -0.35° | ±0.7° |
| Rest of world | Degrees/Minutes | -0° 12' | ±30' | -0° 24' | ±30' | -0° 12' | ±42' |
| | Decimal Degrees | -0.2° | ±0.5° | -0.4° | ±0.5° | -0.2° | ±0.7° |

- All above figures are at "Showroom" height - For additional information, refer to Vehicle Ride Height.
- Tires must be inflated to normal pressure -
  For additional information, refer to: Specifications (204-04 Wheels and Tires, Specifications).

**Wheel Alignment - Front Caster**

| Description | | Left-hand | | Right-hand | | Balance*2 | |
|---|---|---|---|---|---|---|---|
| Markets | Degrees / Minutes | Nominal | Tolerance | Nominal | Tolerance | Nominal | Tolerance |
| All right-hand drive and Japan | Degrees/Minutes | 6° 53' | ±0° 42' | 6° 20' | ±0° 42' | -0° 33' | ±0° 42' |
| | Decimal Degrees | 6.88° | ±0.7° | 6.33° | ±0.7° | -0.55° | ±0.7° |
| USA, Canada, Mexico and Dominican Republic (Federal) | Degrees/Minutes | 6° 36' | ±0° 42' | 6° 44' | ±0° 42' | -0° 8' | ±0° 42' |
| | Decimal Degrees | 6.61° | ±0.7° | 6.74° | ±0.7° | 0.14° | ±0.7° |
| Rest of world | Degrees/Minutes | 6° 36' | ±0° 42' | 6° 36' | ±0° 42' | 0° 0' | ±0° 42' |
| | Decimal Degrees | 6.61° | ±0.7° | 6.61° | ±0.7° | 0° | ±0.7° |

- All above figures are at "Showroom" height - For additional information, refer to Vehicle Ride Height.
- Tires must be inflated to normal pressure -
  For additional information, refer to: Specifications (204-04 Wheels and Tires, Specifications).

**Wheel Alignment - Front Toe**

| Description | | Left-hand | | Right-hand | | Total Toe | |
|---|---|---|---|---|---|---|---|
| Markets | Degrees / Minutes | Nominal | Tolerance | Nominal | Tolerance | Nominal | Tolerance |
| All right-hand drive and Japan | Degrees/Minutes | 0° 3' | ±6' | 0° 3' | ±6' | 0° 6' | ±0° 10' |
| | Decimal Degrees | 0.05° | ±0.10° | 0.05° | ±0.10° | ±0.10° | ±0.17° |
| USA, Canada, Mexico and Dominican Republic (Federal) | Degrees/Minutes | 0° 3' | ±6' | 0° 3' | ±6' | 0° 6' | ±0° 10' |
| | Decimal Degrees | 0.05° | ±0.10° | 0.05° | ±0.10° | ±0.10° | ±0.17° |
| Rest of world | Degrees/Minutes | 0° 3' | ±6' | 0° 3' | ±6' | 0° 6' | ±0° 10' |
| | Decimal Degrees | 0.05° | ±0.10° | 0.05° | ±0.10° | ±0.10° | ±0.17° |

- All above figures are at "Showroom" height - For additional information, refer to Vehicle Ride Height.
- Tires must be inflated to normal pressure -
  For additional information, refer to: Specifications (204-04 Wheels and Tires, Specifications).

**Wheel Alignment - Rear Camber**

| Description | | Left-hand | | Right-hand | | Balance*1 | |
|---|---|---|---|---|---|---|---|
| Markets | Degrees / Minutes | Nominal | Tolerance | Nominal | Tolerance | Nominal | Tolerance |
| All Markets | Degrees/Minutes | -0° 32' | ±45' | -0° 32' | ±45' | 0° 0' | ±45' |
| | Decimal Degrees | -0.54° | ±0.75° | -0.54° | ±0.75° | 0° | ±0.75° |

- All above figures are at "Showroom" height - For additional information, refer to Vehicle Ride Height.
- Tires must be inflated to normal pressure -
  For additional information, refer to: Specifications (204-04 Wheels and Tires, Specifications).

**Wheel Alignment - Rear Toe**

| Description | | Left-hand | | Right-hand | | Thrust Angle*5 | | Total Toe | |
|---|---|---|---|---|---|---|---|---|---|
| Markets | Degrees / Minutes | Nominal | Tolerance | Nominal | Tolerance | Nominal | Tolerance | Nominal | Tolerance |
| All Markets (Naturally Aspirated) | Degrees/Minutes | 0° 5' | ±6' | 0° 5' | ±6' | 0° 0' | ±6' | 0° 10' | ±10' |
| | Decimal Degrees | 0.08° | ±0.10° | 0.08° | ±0.10° | 0° | ±0.10° | 0.167° | ±0.167° |
| All Markets (Supercharged) | Degrees/Minutes | 0° 8' | ±6' | 0° 8' | ±6' | 0° 0' | ±6' | 0° 15' | ±10' |
| | Decimal Degrees | 0.13° | ±0.10° | 0.13° | ±0.10° | 0° | ±0.10° | 0.25° | ±0.167° |

GETtheMANUALS.org

| Description | | Left-hand | | Right-hand | | Thrust Angle*5 | | Total Toe | |
|---|---|---|---|---|---|---|---|---|---|
| Markets | Degrees/Minutes | Nominal | Tolerance | Nominal | Tolerance | Nominal | Tolerance | Nominal | Tolerance |

- *1 Camber balance = RH camber - LH camber
- *2 Caster balance = RH caster - LH caster
- *3 Camber PI = 10x(RH camber - LH camber)
- *4 PI = 10x(RH camber - LH camber) - 2x(RH caster - LH caster)
- *5 Thrust angle = Crab angle = (RH rear toe - LH rear toe)÷2
- All above figures are at "Showroom" height - For additional information, refer to Vehicle Ride Height.
- Tires must be inflated to normal pressure -
  For additional information, refer to: Specifications (204-04 Wheels and Tires, Specifications).

**General Specifications**

| Item | Specification |
|---|---|
| Crabbing — maximum (centerline of front tires compared to centerline of rear tires) | 12.7 mm (0.5 in) |
| **Clear Vision** | |
| Clear vision (negative value is counterclockwise) | 0° ± 3° |
| **Ride Height** | |
| Front | 388 ± 15 mm (15.3 in. ± 0.6 in) |
| Rear | 382.0 ± 15 mm (15.1 in. ± 0.6 in) |
| **Ball Joint Radial Play** | |
| Lower ball joint — maximum | 0.8 mm (1/32 in) |
| Upper ball joint — maximum | 0.8 mm (1/32 in) |
| **Vehicle Lean (Side-to-Side Height Differences)** | |
| Front wheel opening difference — maximum | 12 mm (0.5 in) |
| Rear wheel opening difference — maximum | 10 mm (0.4 in) |
| **Vehicle Attitude (Front-to-Rear Height Difference)** | |
| Maximum vehicle attitude = average front - average rear | 14.5 mm (0.6 in) |

GETtheMANUALS.org

# Suspension System - General Information - Wheel Alignment Angles

Description and Operation

Camber, caster and toe are adjust able on the front suspension system. Only the toe is adjustable on the rear suspension system. Camber and caster are adjusted by means of eccentric cams on the lower arm mounting bolts. The front toe is adjusted by use of the front tie-rod. The rear toe is adjusted by the use of toe link assemblies connecting the knuckles to the rear sub-frame.

## Camber

Negative Camber

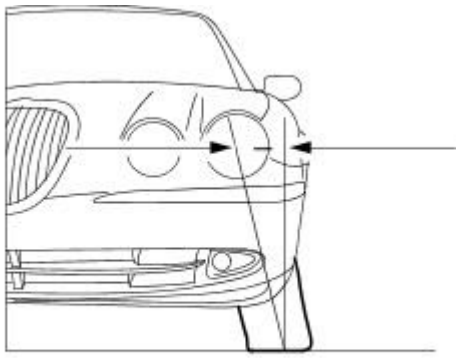

VUJ0000415

Positive Camber

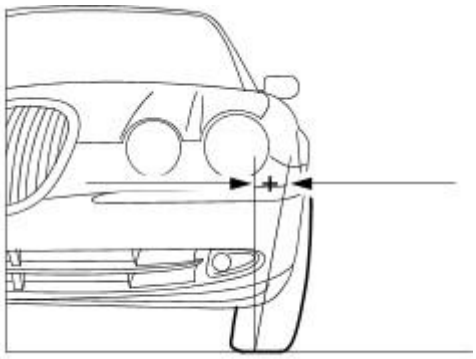

VUJ0002051

Camber is the vertical tilt of the wheel when viewed from the front. Camber can be positive or negative and has a direct effect on tire wear.

## Caster

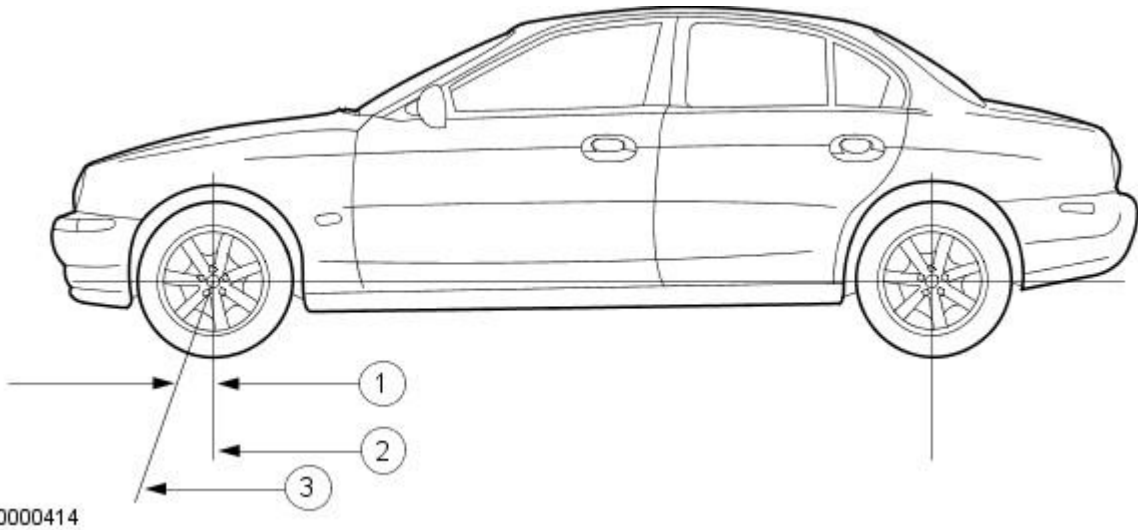


VUJ0000414

| Item | Description |
|---|---|
| 1 | Positive caster |
| 2 | True vertical |
| 3 | Steering axis |

Caster is the deviation from vertical of an imaginary line drawn through the ball joints when viewed from the side. The caster specifications in this section will give the vehicle the best directional stability characteristics when loaded and driven. The caster setting is not related to tire wear.

## Toe

Positive Toe (Toe-In)

GETtheMANUALS.org

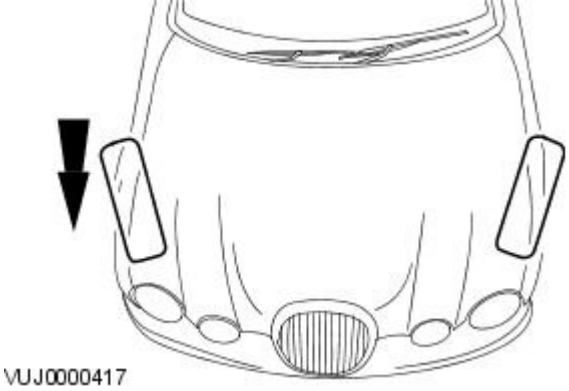

VUJ0000417

Negative Toe (Toe-Out)

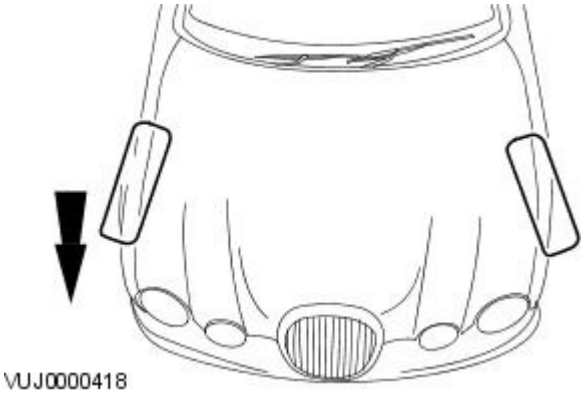

VUJ0000418

The vehicle toe setting:

- affects tire wear and directional stability.

## Ride Height

• NOTE: All ride height measurements are carried out with vehicle empty and 9 liters of fuel in tank (showroom condition).

Front Ride Height Measurement

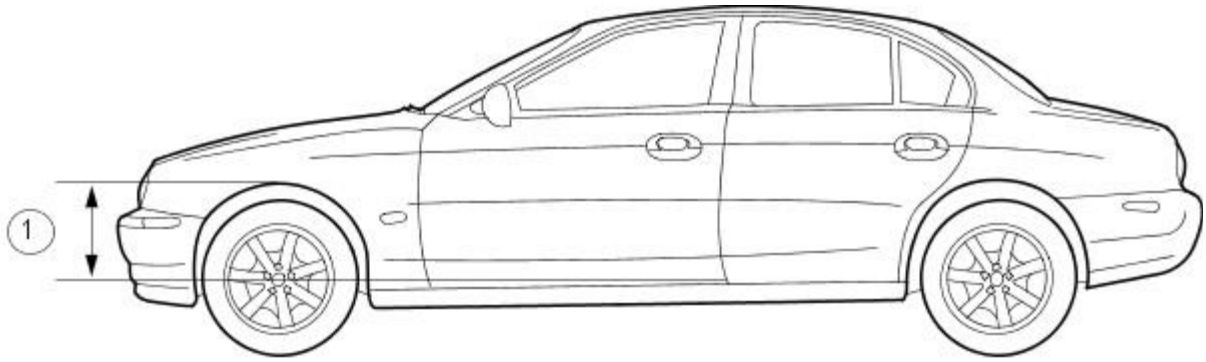


VUJ0001972

| Item | Description |
|---|---|
| 1 | Ride height |

Rear Ride Height Measurement

GETtheMANUALS.org

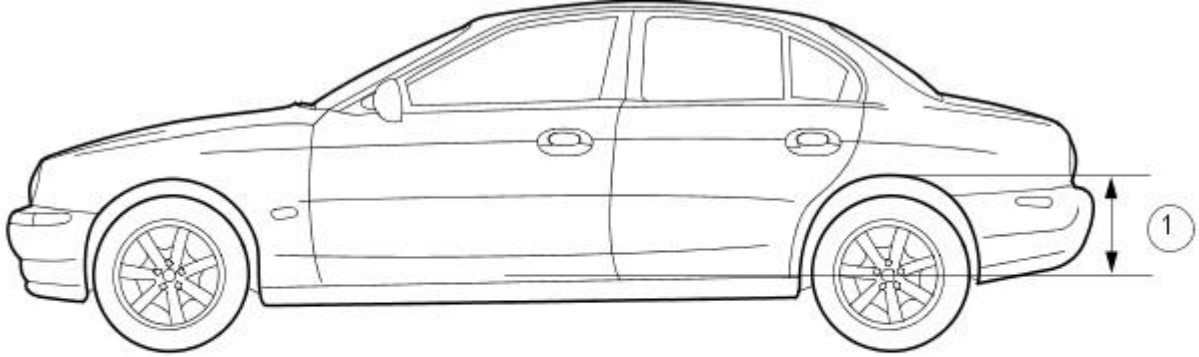


VUJ0002028

| Item | Description |
|---|---|
| 1 | Ride height |

## Wheel Track

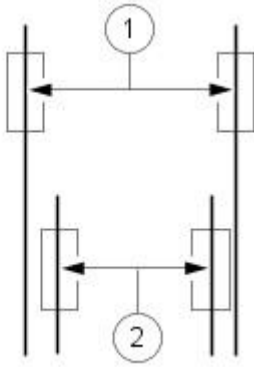


A0001102

| Item | Description |
|---|---|
| 1 | Front track |
| 2 | Rear track |

## Crabbing

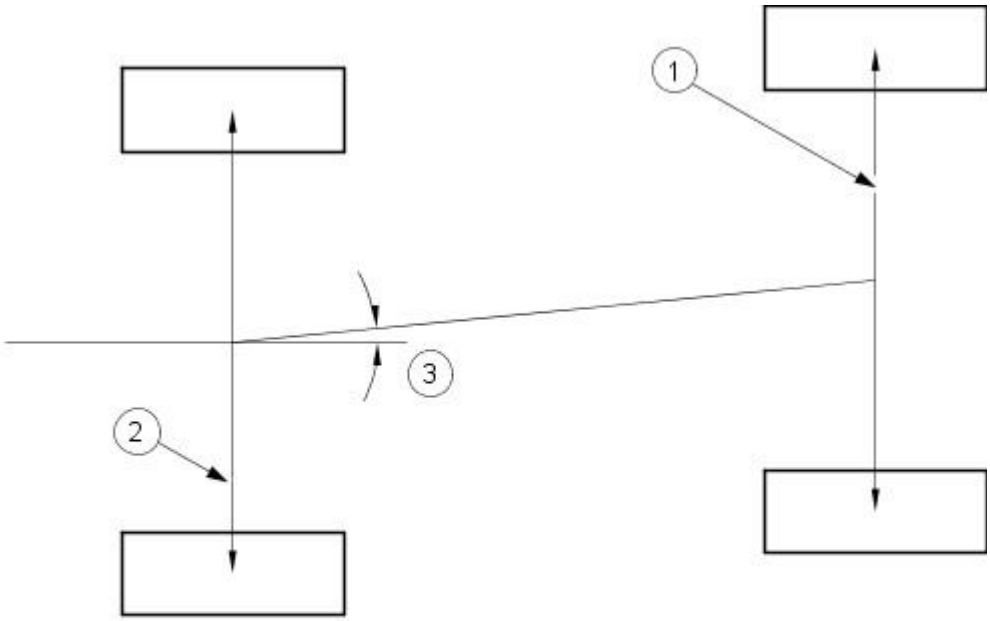


E31475

| Item | Description |
|---|---|
| 1 | Front track |
| 2 | Rear track |
| 3 | Crabbing angle |

Crabbing is the condition in which the independent rear suspension (IRS) system is not square to the chassis. Heavily crowned roads can give the illusion of crabbing.

GETtheMANUALS.org

## Wander

Wander is the tendency of the vehicle to require frequent, random left and right steering wheel corrections to maintain a straight path down a level road.

## Shimmy

Shimmy, as observed by the driver, is rotational oscillations of the steering wheel which may come and go over time, generally resulting from wheel and tire imbalances.

Shimmy can be experienced at any speed but generally between 50 to 90 miles/hour (80 to 145 km/h) and is most often experienced on smooth roads at steady speeds.

## Nibble

Sometimes confused with shimmy, nibble is a condition resulting from tire interaction with various road surfaces or brake disc irregularity and observed by the driver as small rotational oscillations of the steering wheel.

## Poor Returnability of the Steering

Poor returnability of the steering is used to describe the poor return of the steering wheel to center after a turn or the steering correction is completed.

## Drift/Pull

Pull is a tugging sensation, felt by the hands on the steering wheel, that must be overcome to keep the vehicle going straight.

Drift describes what a vehicle with this condition does with hands off the steering wheel.

- A vehicle-related drift/pull, on a flat road, will cause a consistent deviation from the straight-ahead path and require constant steering input in the opposite direction to counteract the effect.
- Drift/pull may be induced by conditions external to the vehicle (i.e., wind, road crown).

## Vague On-Center Feel

Vague on-center feel is characterized by little or no buildup of turning effort felt in the steering wheel as the wheel is rocked slowly left and right within very small turns around center or straight-ahead (under 20 degrees of steering wheel turn). Efforts may be said to be "flat on center."

- In the diagnosis of a roadability problem, it is important to understand the difference between wander and vague on-center feel.

GETtheMANUALS.org

# Suspension System - General Information - Suspension System

Diagnosis and Testing

## Inspection and Verification

1. **1.** Verify the customer's concern by carrying out a road test on a smooth road. If any vibrations are apparent, refer to Section 100-04 Noise, Vibration and Harshness
2. **2.** Visually inspect for obvious signs of mechanical damage.

**Visual Inspection Chart**

| Mechanical |
|---|
| • Damaged tires<br>• Wheel bearing(s)<br>• Loose or damaged front or rear suspension components<br>• Loose, damaged or missing suspension fastener(s)<br>• Incorrect spring usage<br>• Damaged or sagging spring(s)<br>• Damaged or leaking shock absorber(s)<br>• Damaged or leaking strut(s)<br>• Worn or damaged suspension bushing(s)<br>• Loose, worn or damaged steering system components<br>• Damaged axle components |

3. **3.** If an obvious cause for an observed or reported condition is found, correct the cause (if possible) before proceeding to the next step.
4. **4.** If the fault is not visually evident, verify the symptom and refer to the following Symptom Chart.

## Symptom Chart

**Symptom Chart**

| Symptom | Possible Sources | Action |
|---|---|---|
| Crabbing | * Incorrect rear thrust angle. | * CHECK the rear toe adjustment.<br>REFER to Rear Toe Adjustment in this section. |
| | * Front or rear suspension components. | * INSPECT the front and rear suspension systems. REPAIR or INSTALL new suspension components as necessary. Refer to Section 204-01 Front Suspension Or Section 204-02 Rear Suspension. |
| | * Drive axle damaged. | * INSTALL a new drive axle.<br>REFER to Section 205-02 Rear Drive Axle/Differential. |
| Drift/Pull | * Unequal tire pressure. | * CHECK and ADJUST the tire pressures. INSPECT the tire for excessive wear.<br>REFER to Section 204-04 Wheels and Tires. |
| | * Incorrect wheel alignment. | * CHECK and ADJUST the wheel alignment.<br>REFER to Front Toe Adjustment— in this section. |
| | * Tires. | * CHECK and ADJUST the tire pressures. INSPECT the tire for excessive wear.<br>REFER to Section 204-04 Wheels and Tires. |
| | * Unevenly loaded or overloaded vehicle. | * NOTIFY the customer of incorrect vehicle loading. |
| | * Damaged steering components. | * CHECK the steering system.<br>REFER to Section 211-00 Steering System - General Information. |
| | * Brake drag. | * CHECK the brakes.<br>REFER to Section 206-00 Brake System - General Information. |
| Front Bottoming or Riding Low | * Spring(s). | * CHECK the ride height. INSTALL new springs as necessary.<br>REFER to Section 204-01 Front Suspension. |
| Incorrect Tire Wear | * Incorrect tire pressure (rapid center rib or inner and outer edge wear). | * CHECK and ADJUST the tire pressure. INSPECT the tire for excessive wear.<br>REFER to Section 204-04 Wheels and Tires. |
| | * Excessive front or rear toe (rapid inner or outer edge wear). | * CHECK and ADJUST the wheel alignment.<br>REFER to Front Toe Adjustment— in this section. |
| | * Excessive negative or positive camber (rapid inner or outer edge wear). | * CHECK and ADJUST the wheel alignment.<br>REFER to Camber and Caster Adjustment in this section. |
| | * Tires out of balance (tires cupped or dished). | * BALANCE the tires. |
| Rough Ride | * Spring(s). | * CHECK and INSTALL new springs as necessary. Refer to Section 204-01 Front Suspensionor Section 204-02 Rear Suspension. |
| | * Shock absorber(s). | * CHECK and INSTALL new shock absorbers as necessary. Refer to Section 204-01 Front Suspensionor Section 204-02 Rear Suspension. |
| Shimmy or Wheel Tramp | * Loose wheel nut(s). | * CHECK and TIGHTEN the wheel nuts to specification.<br>REFER to Section 204-04 Wheels and Tires. |
| | * Loose front suspension fasteners. | * CHECK and TIGHTEN the suspension fasteners to specification.<br>REFER to Section 204-01 Front Suspension. |
| | * Front wheel bearing(s). | * CHECK the wheel bearings.<br>REFER to Wheel Bearing Inspection—Front and Rear in this section. |
| | * Worn or damaged suspension component bushing. | * CHECK and INSTALL new components as necessary. Refer to Section 204-01 Front Suspension or Section 204-02 Rear Suspension. |
| | * Wheel/tires. | * CHECK the wheels/tires. BALANCE or INSTALL new wheel/tires as necessary.<br>REFER to Section 204-04 Wheels and Tires. |
| | * Shock absorber(s). | * CHECK and INSTALL new shock absorbers as necessary. Refer to Section 204-01 Front Suspensionor Section 204-02 Rear Suspension. |
| | * Spring(s). | * CHECK and INSTALL new springs as necessary. Refer to Section 204-01 Front Suspensionor Section 204-02 Rear Suspension. |
| | * Loose, worn or damaged ball joint(s). | * CHECK the Ball Joint(s).<br>REFER to Ball Joint Inspection in this section. |
| | * Loose, worn or damaged steering components. | * CHECK and INSTALL new components as necessary.<br>REFER to Section 211-00 Steering System - General Information. |

GETtheMANUALS.com

| | | |
|---|---|---|
| | * Front wheel alignment. | * CHECK and ADJUST the wheel alignment.<br>REFER to Front Toe Adjustment in this section. |
| Poor Returnability of the steering | * Ball joints. | * CHECK the Ball Joints.<br>REFER to Ball Joint Inspection in this section. |
| | * Steering components. | * CHECK and INSTALL new components as necessary.<br>REFER to Section 211-00 Steering System - General Information. |
| Steering wheel off-center | * Unequal front or rear toe settings. | * CHECK and ADJUST the wheel alignment. For additional information, refer toFront Toe Adjustment and Rear Toe Adjustment in this section. |
| | * Steering components. | * CHECK and INSTALL new components as necessary.<br>REFER to Section 211-00 Steering System - General Information. |
| Sway or roll | * Overloaded, unevenly or incorrectly loaded vehicle. | * NOTIFY the customer of incorrect vehicle loading. |
| | * Loose wheel nut(s). | * CHECK and TIGHTEN the wheel nut(s) to specification.<br>REFER to Section 204-04 Wheels and Tires. |
| | * Spring(s). | * CHECK and INSTALL new springs as necessary. Refer to Section 204-01 Front Suspensionor Section 204-02 Rear Suspension. |
| | * Shock absorber(s). | * CHECK and INSTALL new shock absorbers as necessary. Refer to Section 204-01 Front Suspensionor Section 204-02 Rear Suspension |
| | * Loose front stabilizer bar or rear stabilizer bar . | * CHECK and TIGHTEN the stabilizer bar to specification. Refer to Section 204-01 Front Suspensionor Section 204-02 Rear Suspension. |
| | * Worn lower suspension arm stabilizer bar insulators. | * INSTALL new lower suspension arm stabilizer bar insulators as necessary. Refer to Section 204-01 Front Suspensionor Section 204-02 Rear Suspension. |
| Vehicle Leans to One Side | * Unevenly loaded or overloaded vehicle. | * NOTIFY the customer of incorrect vehicle loading. |
| | * Front or rear suspension components. | * INSPECT the front and rear suspension systems. REPAIR or INSTALL new suspension components as necessary. Refer to Section 204-01 Front Suspensionor Section 204-02 Rear Suspension. |
| | * Shock absorber(s). | * CHECK and INSTALL new shock absorbers as necessary. Refer to Section 204-01 Front Suspensionor Section 204-02 Rear Suspension. |
| | * Spring(s). | * CHECK and INSTALL new springs as necessary. Refer to Section 204-01 Front Suspensionor Section 204-02 Rear Suspension. |
| | * Incorrect ride height. Lateral tilt out of specification. | * CHECK the ride height. INSTALL new springs as necessary. Refer to Section 204-01 Front Suspensionor Section 204-02 Rear Suspension. |
| Vibration/Noise | * Tires/wheel.<br>* Wheel bearings.<br>* Wheel hubs.<br>* Brake components.<br>* Suspension components.<br>* Steering components. | * CHECK and INSTALL new components as necessary.<br>REFER to Section 100-04 Noise, Vibration and Harshness. |
| Wander | * Unevenly loaded or overloaded vehicle. | * NOTIFY the customer of incorrect vehicle loading. |
| | * Ball joint(s). | * CHECK the Ball Joint(s).<br>REFER to Ball Joint Inspection in this section. |
| | * Front wheel bearing(s). | * CHECK the wheel bearings.<br>REFER to Wheel Bearing Inspection in this section. |
| | * Loose, worn or damaged suspension components. | * CHECK and INSTALL new suspension components as necessary. Refer to Section 204-01 Front Suspensionor Section 204-02 Rear Suspension |
| | * Loose suspension fasteners. | * CHECK and TIGHTEN the suspension fasteners to specification. Refer to Section 204-01 Front Suspensionor Section 204-02 Rear Suspension. |
| | * Steering components. | * CHECK and INSTALL new steering components.<br>REFER to Section 211-00 Steering System - General Information. |
| | * Wheel alignment (excessive total front toe-out). | * CHECK and ADJUST the wheel alignment.<br>REFER to Front Toe Adjustment in this section. |

## Component Tests

### Ball Joint Inspection

• NOTE: The front suspension is shown in the following procedures. The inspection of the rear suspension upper ball joint is similar.

1. **1.** Raise and support the vehicle.
   REFER to Section 100-02 Jacking and Lifting.

2. **2.** Prior to carrying out any inspection of the ball joints, inspect the front wheel bearings.
   REFER to Wheel Bearing Inspection in this section.

3. CAUTION: The safety stand beneath the suspension lower lower arm must only support the weight of the suspension and not the full weight of the vehicle. Failure to follow this instruction may result in damage to the components.

   **3.** Position a safety stand beneath the front suspension lower arm or rear suspension lower arm to be tested.

GETtheMANUALS.org

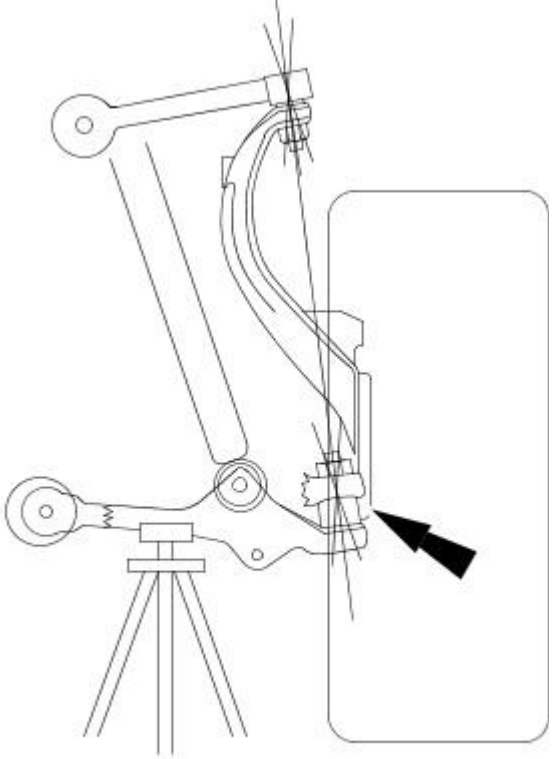

VUJ0005101

4. **4.** While an assistant pulls and pushes the top and bottom of the tire, observe the relative movement between the ball joint and the front suspension lower arm. Any movement at or exceeding the specification indicates a worn or damaged ball joint. Install a new ball joint as necessary.
   REFER to Section 204-01 Front Suspension.

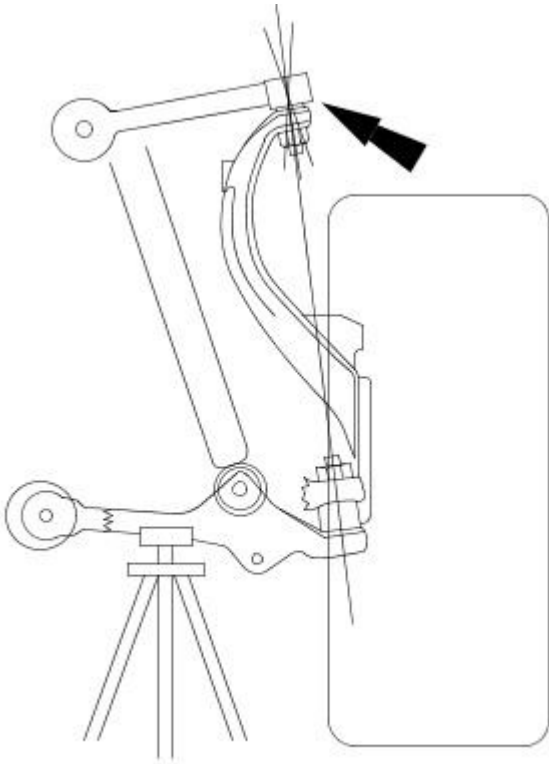

VUJ0005100

5. **5.** While an assistant pulls and pushes the top and bottom of the tire, observe the relative movement between the ball joint and the front suspension upper arm or rear suspension upper arm. Any movement at or exceeding the specification indicates a worn or damaged ball joint. Install a new upper arm as necessary. Refer to Section 204-01 Front Suspensionor Section 204-02 Rear Suspension.
6. **6.** Remove the safety stand.
7. **7.** Lower the vehicle.

GETtheMANUALS.org

# Suspension System - General Information - Camber and Caster Adjustment

General Procedures

- NOTE: The camber and caster adjustment for the left-hand side is shown, the procedure for adjusting the right-hand side is similar.
- NOTE: This procedure must be carried out using a 4-post ramp.

All vehicles

**1.** Check the camber and caster settings. Follow the equipment manufacturer's instructions.

Vehicles requiring caster adjustment

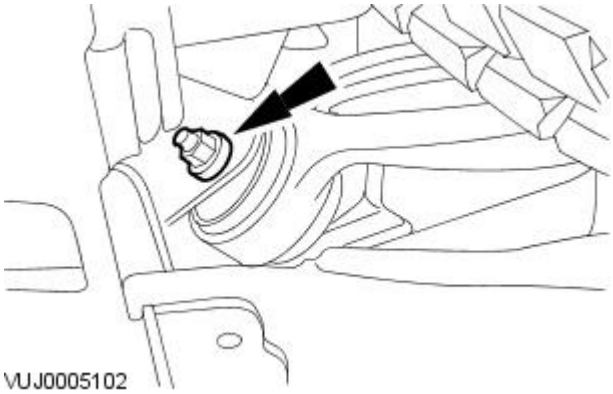


**2.** NOTE: Left-hand shown, right-hand similar.

Loosen the front lower arm lock nut.

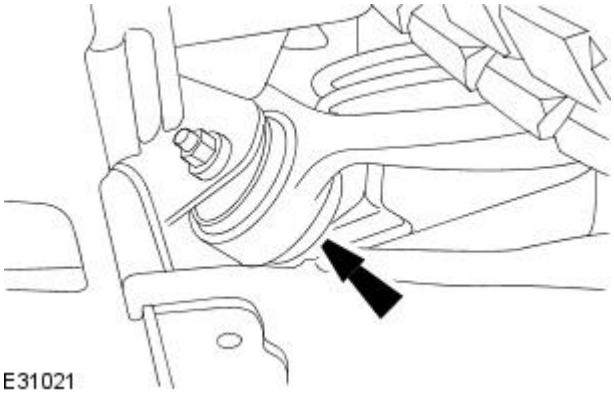


**3.** NOTE: Adjustments to the caster will affect the toe settings. Therefore, the caster and toe may need to be adjusted at the same time to achieve the correct settings.

- NOTE: Left-hand shown, right-hand similar.

Rotate the caster adjustment cam bolt to adjust the caster.

**4.** Check the caster settings. Follow the equipment manufacturer's instructions. Adjust as necessary.

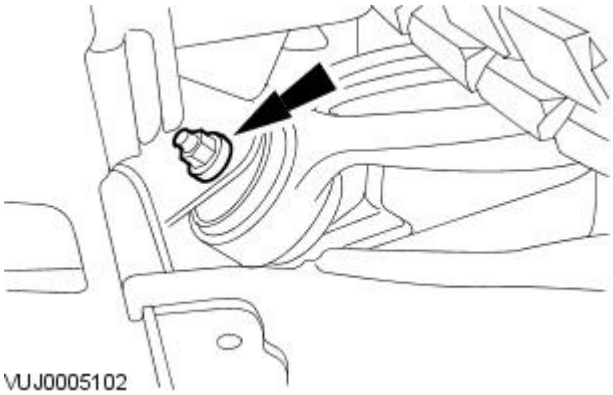


**5.** NOTE: Make sure the caster adjustment cam bolt does not rotate.

- NOTE: Left-hand shown, right-hand similar.

Tighten the caster adjustment cam bolt lock nut.

- Tighten to 175 Nm.

Vehicles requiring camber adjustment

GETtheMANUALS.org

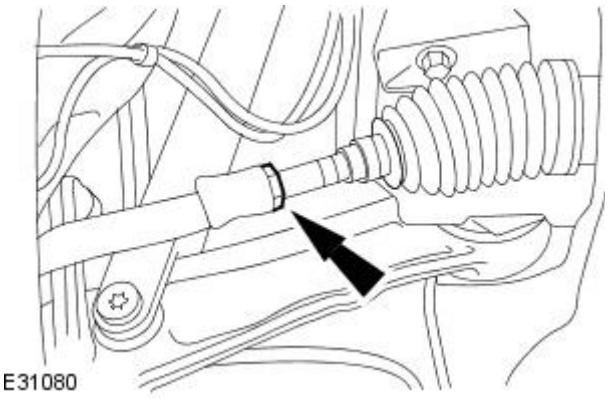


**6.** NOTE: Adjustments to the camber will affect the toe settings. Therefore, the camber and toe may need to be adjusted at the same time to achieve the correct settings.

• NOTE: Left-hand shown, right-hand similar.

Loosen the tie-rod end lock nut.

- Clean and lubricate the lock nut and tie-rod threads.

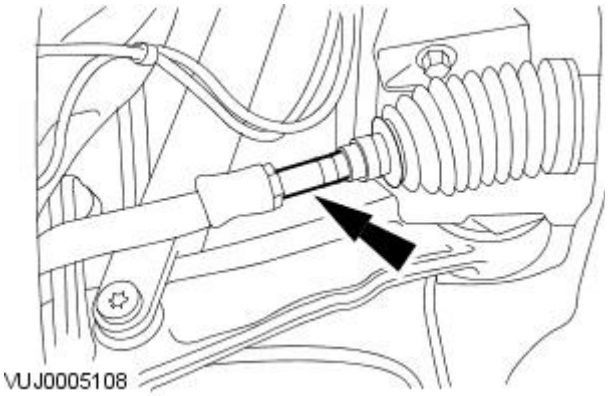


**7.** NOTE: Do not allow the tie-rod end or steering gear boot to twist when the tie-rod is rotated.

• NOTE: Left-hand, shown right-hand similar.

Rotate the tie-rod to adjust the toe.

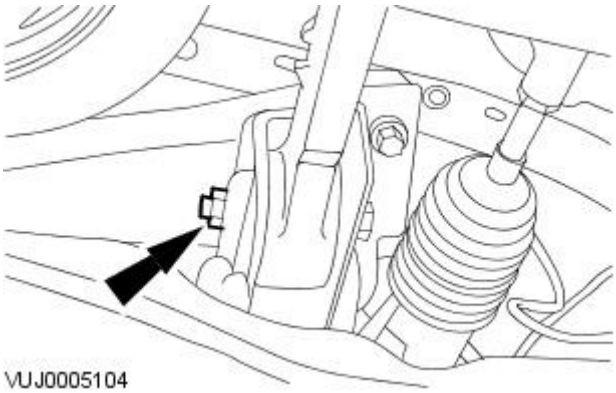


**8.** NOTE: Left-hand shown, right-hand similar.

Loosen the rear lower arm lock nut.

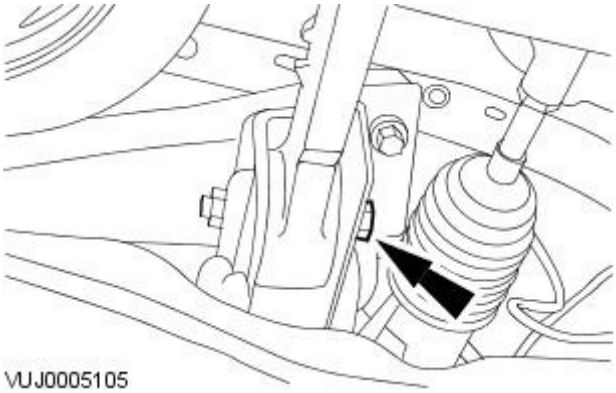


**9.** NOTE: Left-hand shown, right-hand similar.

Rotate the camber adjustment cam bolt to adjust the camber.

**10.** Check the camber and toe settings. Follow the equipment manufacturer's instructions. Adjust as necessary.

GETtheMANUALS.org

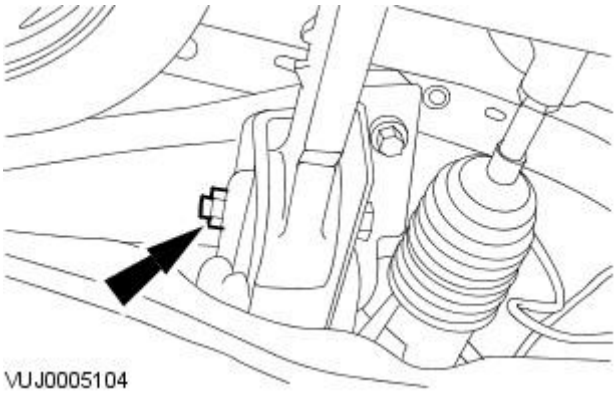


**11.** NOTE: Make sure the camber adjustment cam bolt does not rotate.

• NOTE: Left-hand shown, right-hand similar.

Tighten the rear lower arm lock nut.

- Tighten to 175 Nm.

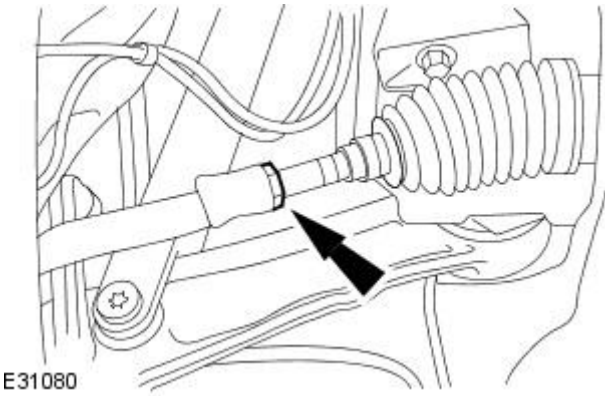


**12.** NOTE: Make sure the tie-rod or tie-rod end does not rotate.

• NOTE: Left-hand shown, right-hand similar.

Tighten the tie-rod end lock nut

- Tighten to 100Nm.

GETtheMANUALS.org

# Suspension System - General Information - Four-Wheel Alignment

General Procedures

• CAUTIONS:

Make sure the vehicle is on a flat level surface.

Make sure the tire pressures are within specification.

Make sure that only the manufacturers' recommended four wheel alignment equipment is used.

Make sure the steering is in the straight ahead position.

1. For wheel alignment information, refer to the suspension specification section.
   For additional information, refer to: Specifications (204-00 Suspension System - General Information, Specifications).
2. Check the tie rod ends, suspension joints, wheel bearings and wheels and tires for damage, wear and free play.
   - Adjust or repair any worn, damaged or incorrectly adjusted components.
3. Check and adjust tire pressures.
4. Position the vehicle on a calibrated, level, vehicle lift.
5. Release the vehicle parking brake.
6. Using only four-wheel alignment equipment approved by Jaguar, check the wheel alignment.
7. NOTE: LH illustration shown, RH is similar.

   To adjust, loosen the toe link locknuts.

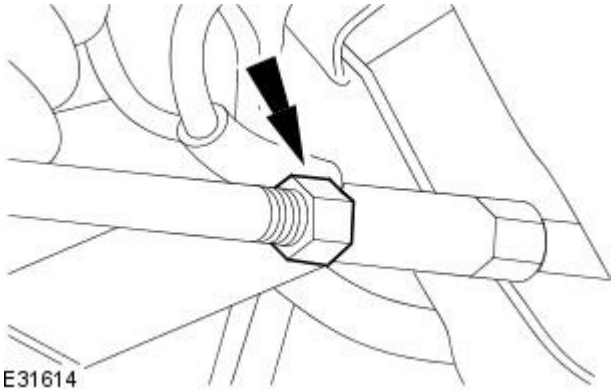


8. CAUTION: Do not allow the gaiter to twist.

• NOTE: Both tie rods must be rotated by an equal amount.

• NOTE: LH illustration shown, RH is similar.

Adjust the rear toe.

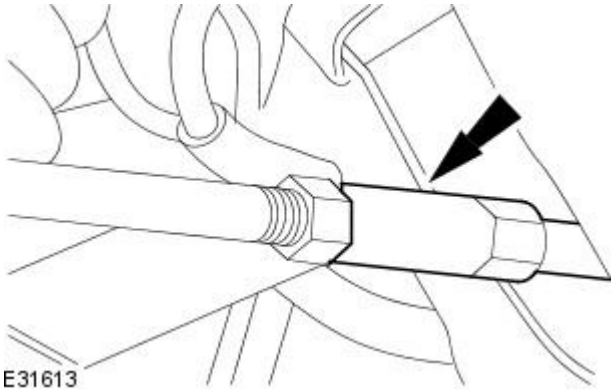


9. Tighten the toe link locknuts to 55 Nm (40 lb.ft).
10. NOTE: LH illustration shown, RH is similar.

    To adjust the caster, loosen the front lower arm lock nuts.

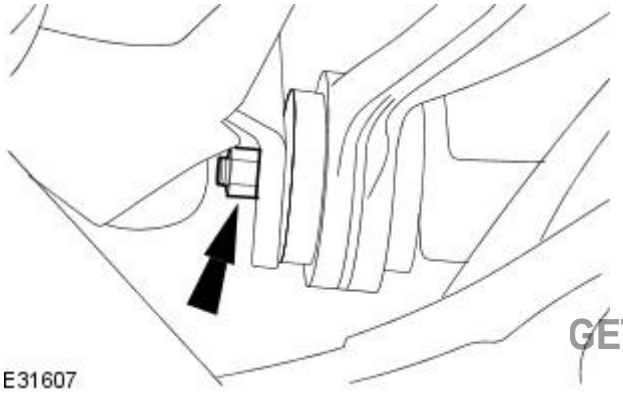


GETtheMANUALS.org

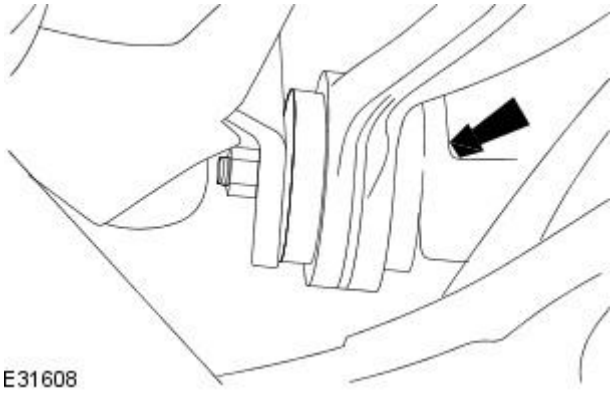


**11.** NOTE: LH illustration shown, RH is similar.

Rotate the caster adjustment cam bolt.

**12.** CAUTION: Make sure the caster adjustment bolt does not rotate while the lock nut is being tightened.

Tighten the caster adjustment cam bolt nut.

- Tighten the nut and bolt to 175 Nm (129 lb.ft).

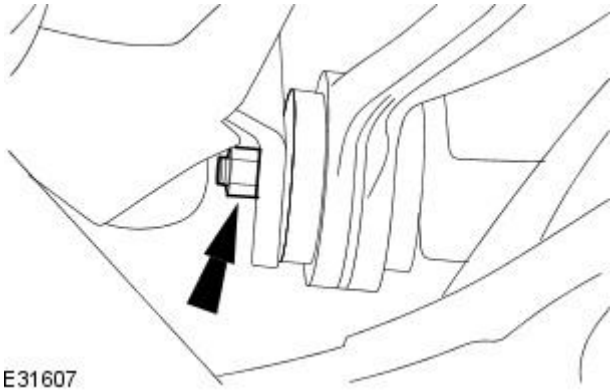


**13.** CAUTION: Adjustments made to the camber setting will affect the front toe setting. Therefore , the camber and toe may need to be adjusted at the same time.

• NOTE: LH illustration shown, RH is similar.

To adjust the camber, loosen the rear lower arm lock nuts.

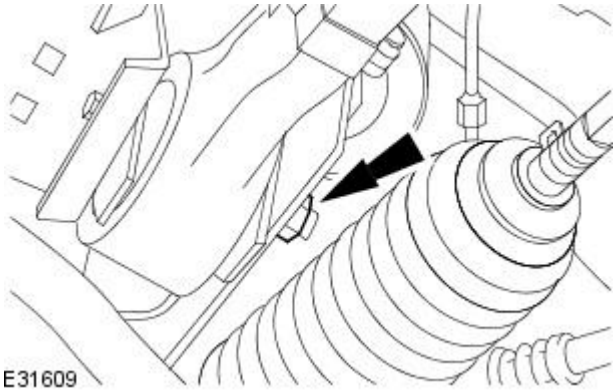


**14.** NOTE: LH illustration shown, RH is similar.

Rotate the camber adjustment cam bolt.

**15.** CAUTION: Make sure the camber adjustment bolt does not rotate while the lock nut is being tightened.

Tighten the camber adjustment cam bolt nut.

- Tighten the nut and bolt to 175 Nm (129 lb.ft).

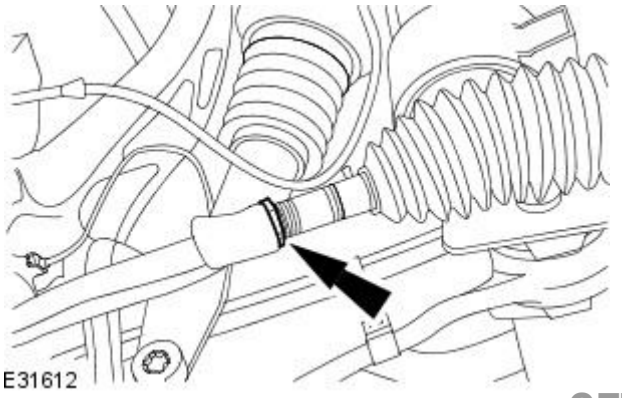


**16.** NOTE: LH illustration shown, RH is similar.

To adjust, loosen the tie rod end lock nuts.

GETtheMANUALS.org

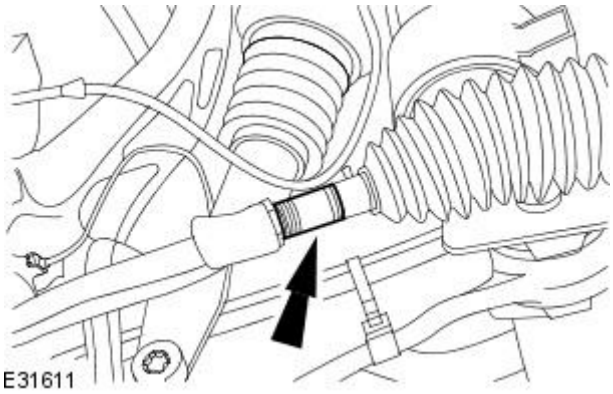


**17.** CAUTION: Do not allow the gaiter to twist.

- NOTE: Both tie rods must be rotated by an equal amount.
- NOTE: LH illustration shown, RH is similar.

Adjust the front toe.

**18.** Tighten the tie rod end lock nuts to 55 Nm (40 lb.ft).

**19.** Using only four-wheel alignment equipment approved by Jaguar, check the wheel alignment.

GETtheMANUALS.org

# Suspension System - General Information - Front Toe Adjustment

General Procedures

1. Start the engine and center the steering wheel.
2. Turn the engine off, and hold the steering wheel in the "straight ahead" position by attaching a rigid link from the steering wheel to the brake pedal.
3. Check the toe settings. Follow the equipment manufacturer's instructions.
4. NOTE: Left-hand shown, right-hand similar.

   Loosen the tie-rod end lock nut .

   - Clean and lubricate the lock nut and tie-rod threads.

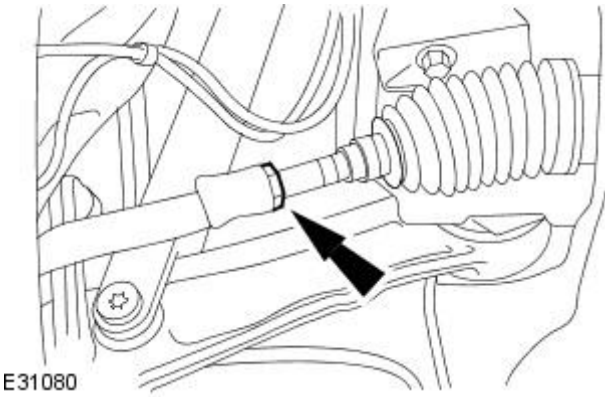


5. NOTE: Do not allow the tie-rod end or steering gear boot to twist when the front tie-rod is rotated.

• NOTE: Left-hand shown, right-hand similar

   Rotate the tie-rod to adjust the toe setting.

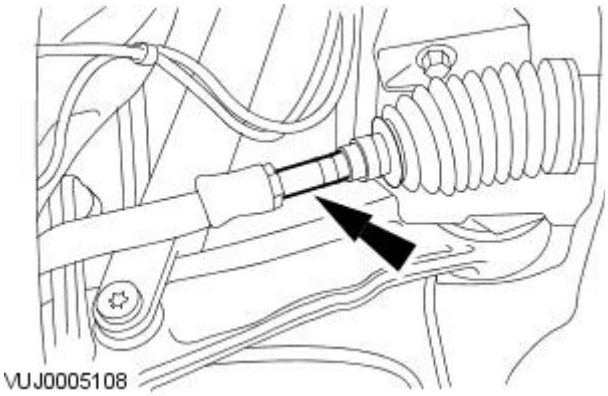


6. NOTE: Make sure the tie-rod or tie-rod end does not rotate.

• NOTE: Left-hand shown, right-hand similar.

   Tighten the tie-rod end lock nut .

   - Tighten to 100 Nm.

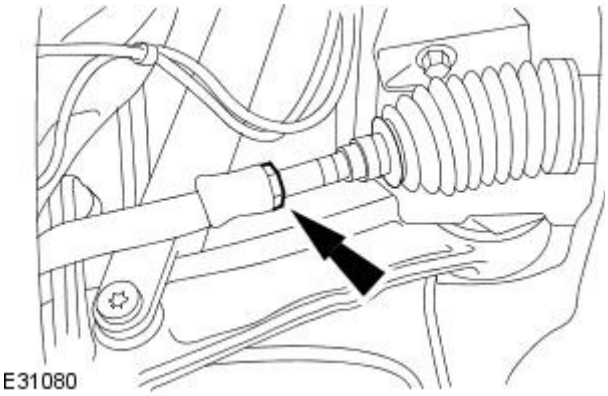


7. Recheck the toe settings. Follow the equipment manufacturer's instructions.

GETtheMANUALS.org

# Suspension System - General Information - Rear Toe Adjustment

General Procedures

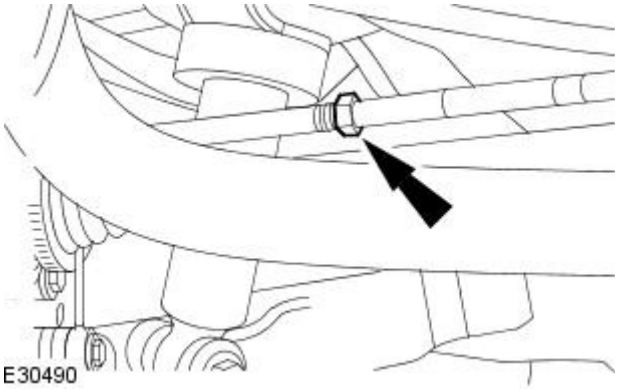


1. Check the toe settings. Follow the equipment manufacturer's instructions.
2. NOTE: Left-hand, shown right-hand similar.

   Loosen the lock nut.

   - Clean and lubricate the lock nut and toe link threads.

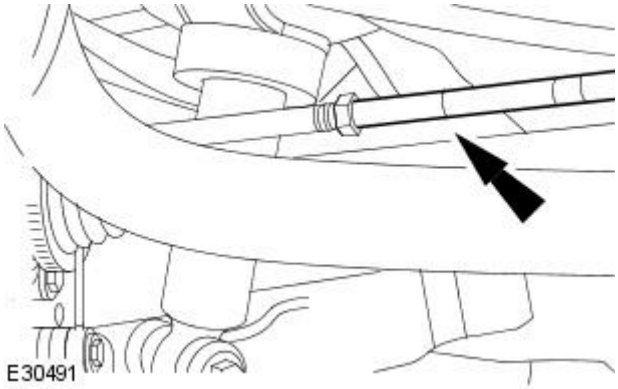


3. Rotate the toe link to adjust the toe settings.

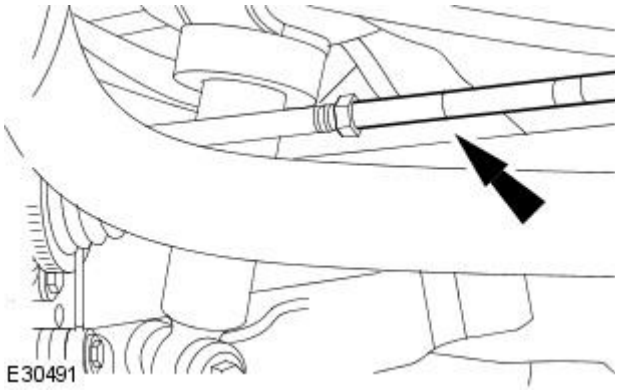


4. Tighten the lock nut.

5. Check the toe settings. Follow the equipment manufacturer's instructions.

GETtheMANUALS.org

# Suspension System - General Information - Wheel Bearing Inspection

General Procedures

1. Raise and support the vehicle. For additional information, refer toSection 100-02 Jacking and Lifting
2. NOTE: Make sure the wheel rotates freely and the brake pads are retracted sufficiently to allow movement of the tire and wheel assembly.

   Firmly grasp the tire at the top and bottom and move the wheel inward and outward while lifting the weight of the tire off the wheel bearing.
3. If the tire and wheel is loose on the wheel hub assembly or does not rotate freely, install a new front wheel hub or rear hub as necessary. For additional information, refer toSection 204-01 Front Suspensionor Section 204-02 Rear Suspension

GETtheMANUALS.org

# Front Suspension -

**Torque Specifications**

| Description | Nm | lb-ft |
|---|---|---|
| Steering gear to subframe retaining bolts | 100 | 74 |
| Stabilizer bar link retaining nut | A | A |
| Stabilizer bar link retaining nut and bolt | 70 | 52 |
| Stabilizer bar clamp retaining bolts | 55 | 41 |
| Rear lower arm ball joint retaining nut | 92 | 68 |
| Front and rear lower arm to subframe retaining nut and bolt | 175 | 129 |
| Front lower arm to rear lower arm retaining nut and bolt | A | A |
| Upper arm ball joint retaining nut | 90 | 66 |
| Upper arm to body retaining nuts and bolts | 47 | 35 |
| Shock absorber and spring assembly upper mounting to body retaining nuts | 27 | 20 |
| Shock absorber and spring assembly to lower arm retaining bolt | 175 | 129 |
| Tie-rod end to wheel knuckle retaining nut | 100 | 74 |
| Shock absorber and spring assembly upper mounting retaining nut (without adaptive damping) | 50 | 37 |
| Shock absorber and spring assembly upper mounting retaining nut (with adaptive damping) | 27 | 20 |
| Wheel hub and bearing to wheel knuckle retaining bolts | 90 | 66 |
| Exhaust manifold to cylinder head retaining nuts (2.5L/3.0L only) | 20 | 15 |
| Dipstick tube retaining bolt | 10 | 7 |
| Engine mount lower retaining nut | 63 | 46 |
| Front subframe front retaining bolt | A | A |
| Front subframe rear retaining bolt | A | A |
| A = refer to the procedure for the correct torque sequence | — | — |

GETtheMANUALS.org

# Front Suspension - Front Suspension

Description and Operation

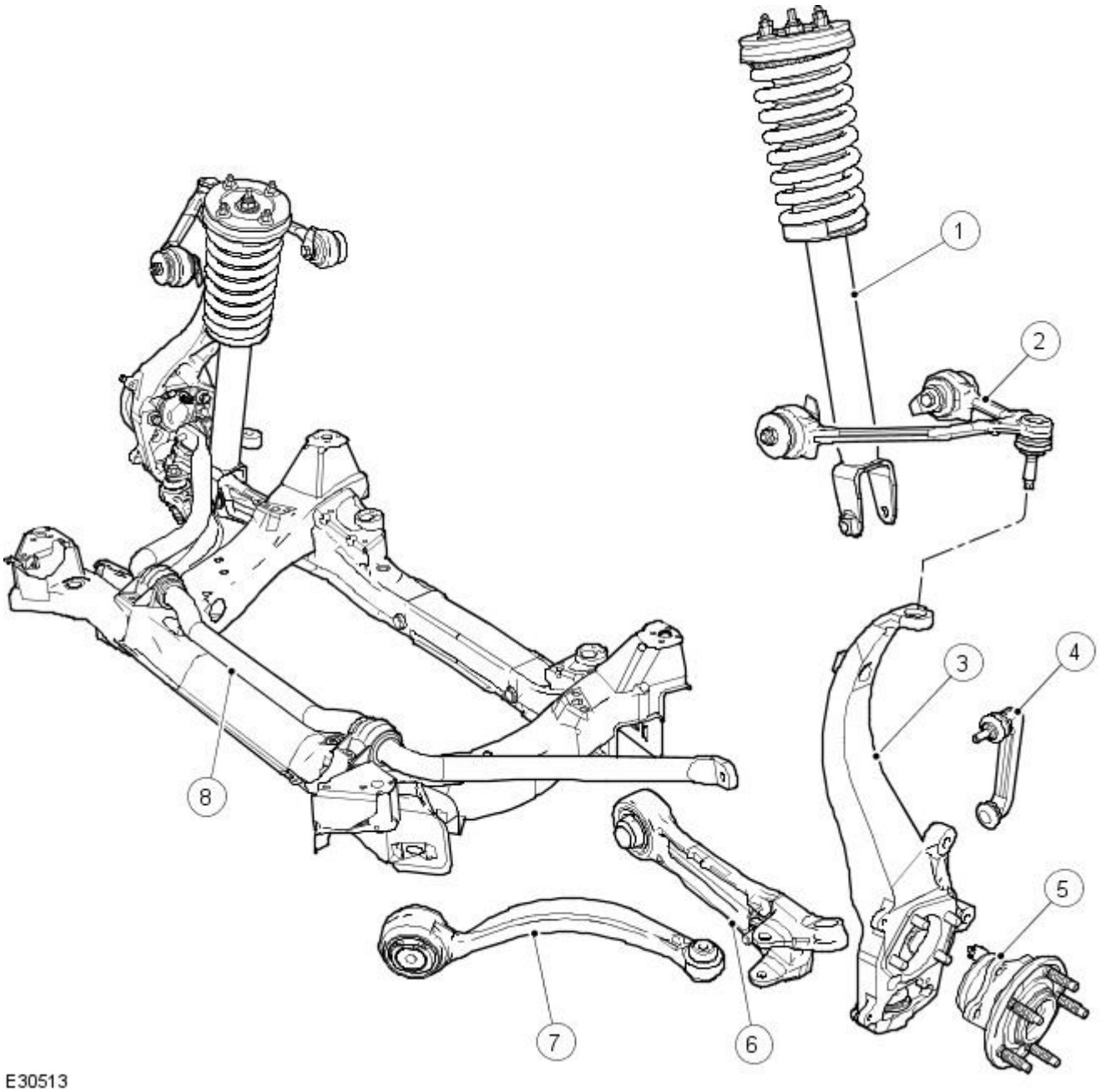


| Item | Part Number | Description |
|---|---|---|
| 1 | — | Shock absorber and spring assembly |
| 2 | — | Upper arm |
| 3 | — | Wheel knuckle |
| 4 | — | Stabilizer bar link |
| 5 | — | Wheel bearing and hub |
| 6 | — | Rear lower arm |
| 7 | — | Front lower arm |
| 8 | — | Stabilizer bar |

GETtheMANUALS.org

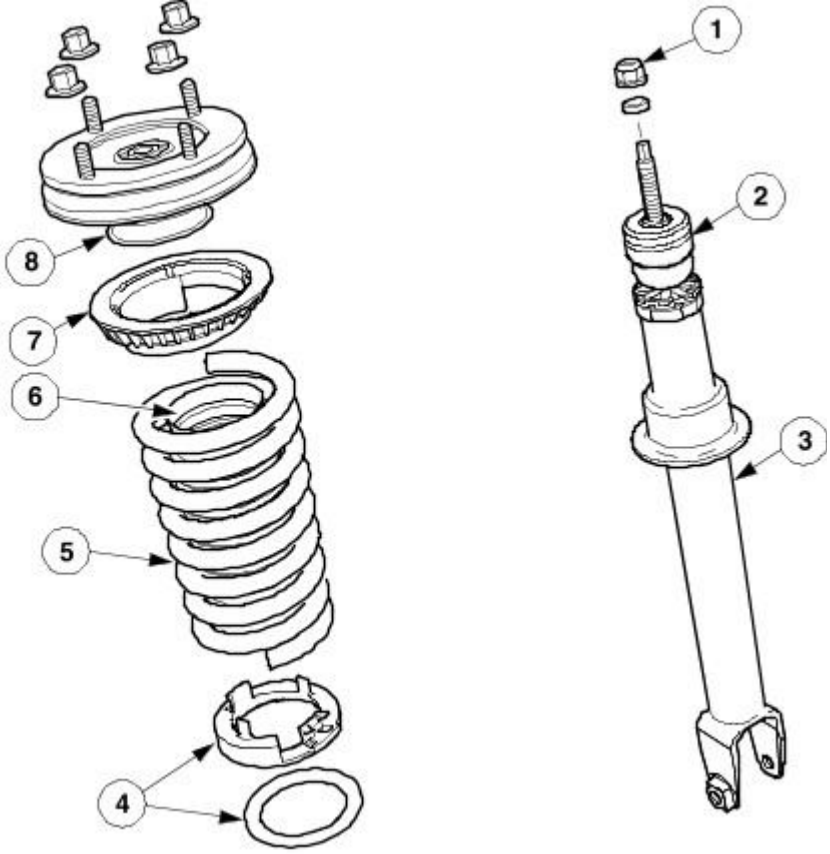


| Item | Part Number | Description |
|---|---|---|
| 1 | — | Retaining nut |
| 2 | — | Bump stop |
| 3 | — | Shock absorber |
| 4 | — | Spring lower isolator |
| 5 | — | Spring |
| 6 | — | Shock absorber boot |
| 7 | — | Spring upper isolator |
| 8 | — | Mounting plate |

WARNING: No attempt must be made to weld or repair the front subframe. If it is damaged a new one must be installed.

The independent front suspension is of the double wishbone type and is mounted on the front subframe, the front subframe consisting of a pressed steel fabrication.

The rear of the front subframe provides the mounting points for the power assisted steering gear and the engine mounts.

A vertical knuckle arm is installed between the lower and upper suspension arms. This wheel knuckle carries the lower arm swivel joint, front hub, ABS rotor, ABS sensor, wheel bearing and brake assembly.

A coaxial shock absorber and spring assembly is installed between the lower arm and vehicle body.

As the road wheel rises, the movement is transmitted to the vertical link, then through the ball joints to the upper and lower arms and the coaxial shock absorber and spring assembly.

A stabilizer bar is mounted via clamps and bushes to the front subframe and is linked via connecting links to each of the lower arms.

When cornering, weight is naturally transferred to the outer wheel and there is a natural tendency for the inner wheel to lift. The stabilizer bar helps to reduce the vehicle roll.

GETtheMANUALS.org

Published: 11-May-2011

# Front Suspension - Front Suspension

Diagnosis and Testing

For additional information, refer to Section 204-00 Suspension System - General Information

GETtheMANUALS.org

# Front Suspension - Front Lower Arm

Removal and Installation

## Removal

1. Remove the wheel and tire.
   For additional information, refer to: Wheel and Tire (204-04 Wheels and Tires, Removal and Installation).
2. Remove the air deflector.
   For additional information, refer to: Air Deflector (501-02 Front End Body Panels, Removal and Installation).
3. Remove the front lower arm retaining nut and bolt.

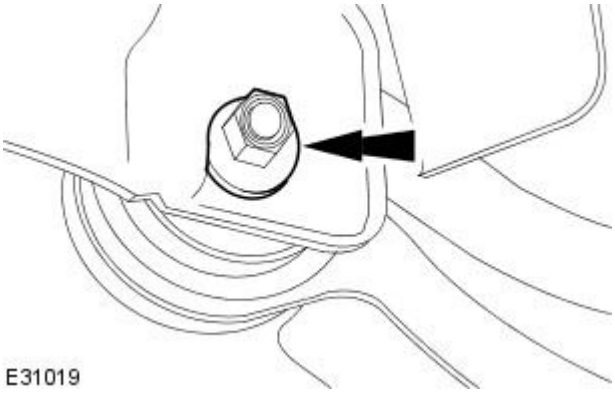


4. NOTE:

   Remove the front lower arm.

   - Remove and discard the nut and bolt.

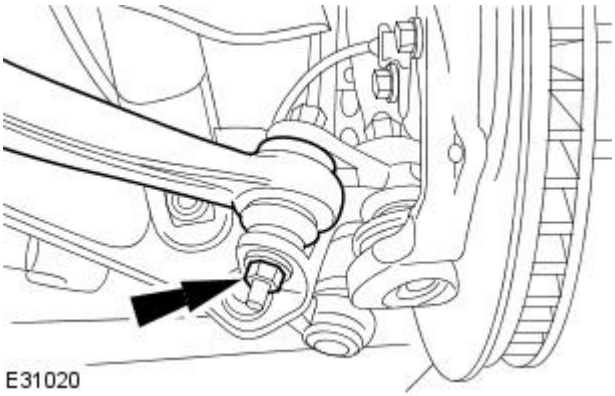


## Installation

1. NOTE: Install a new nut and bolt.

   To install, reverse the removal procedure.

   - Stage 1: Tighten to 60 Nm.
   - Stage 2: Tighten 135°.

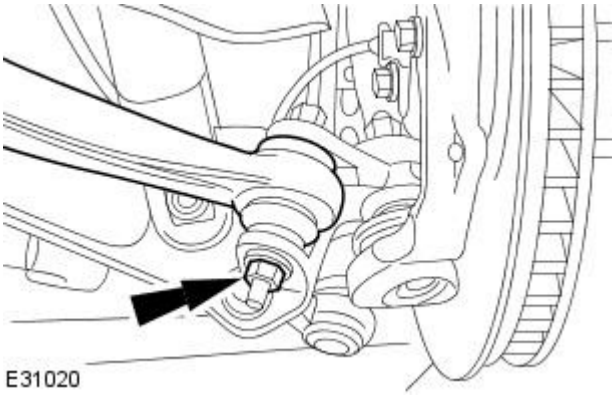


2. Install the front lower arm inner retaining nut and bolt.

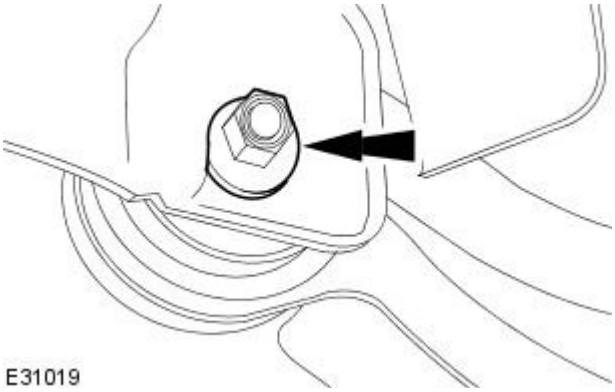


GETtheMANUALS.org

3. Install the air deflector.
   For additional information, refer to: Air Deflector (501-02 Front End Body

Panels, Removal and Installation).

4. Install the wheel and tire.
   For additional information, refer to: Wheel and Tire (204-04 Wheels and Tires, Removal and Installation).

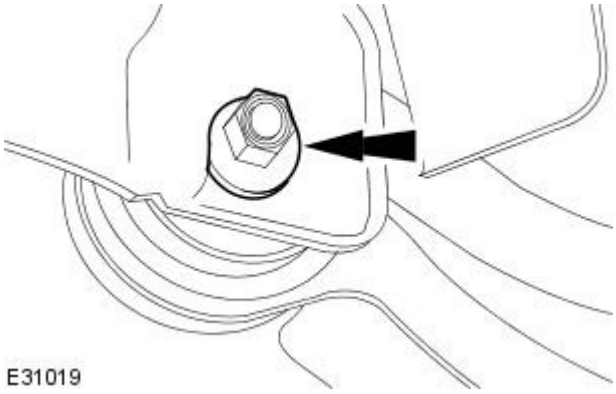


5. CAUTION: The final tightening of the front lower arm inner retaining nut and bolt must be carried out with the vehicle on its wheels.

   Tighten to 175 Nm.

6. Using only four-wheel alignment equipment approved by Jaguar, check the wheel alignment, and adjust if required.
   For additional information, refer to: Four-Wheel Alignment (204-00 Suspension System - General Information, General Procedures).

GETtheMANUALS.org

# Front Suspension - Rear Lower Arm

Removal and Installation

| Special Tool(s) | |
|---|---|
| 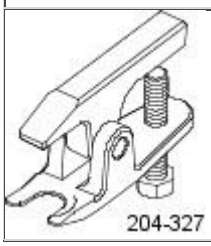 204-327 | Ball Joint Splitter<br><br>204-327 |

## Removal

1. Remove the wheel and tire.
   For additional information, refer to: Wheel and Tire (204-04 Wheels and Tires, Removal and Installation).
2. Remove the air deflector.

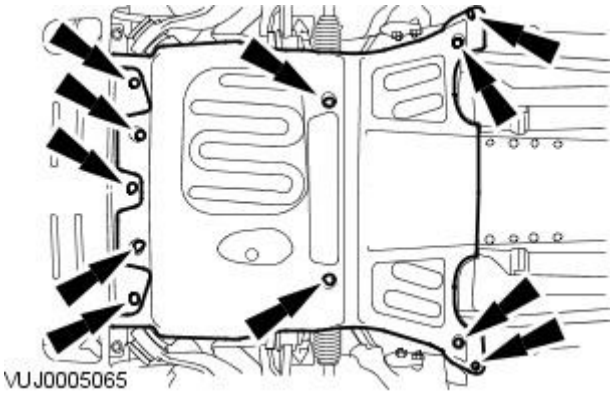


3. Remove the stabilizer bar link retaining nut.

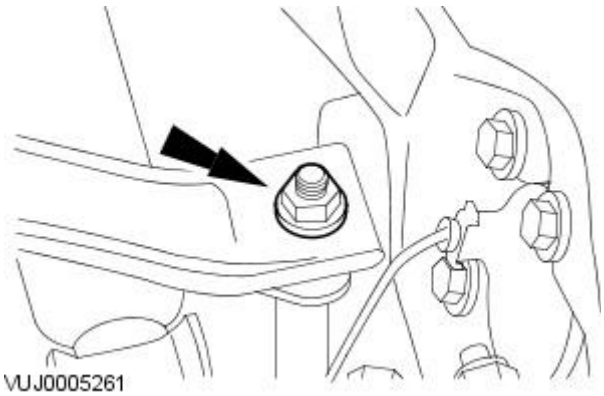


4. Remove the stabilizer bar link.

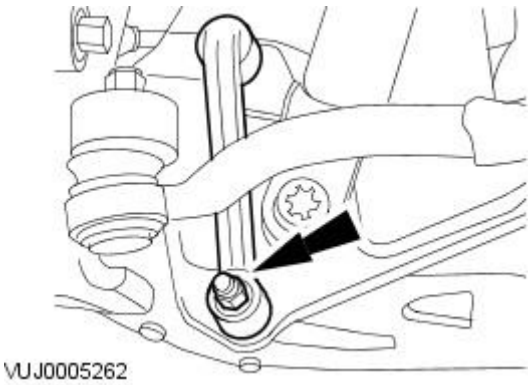


GETtheMANUALS.org

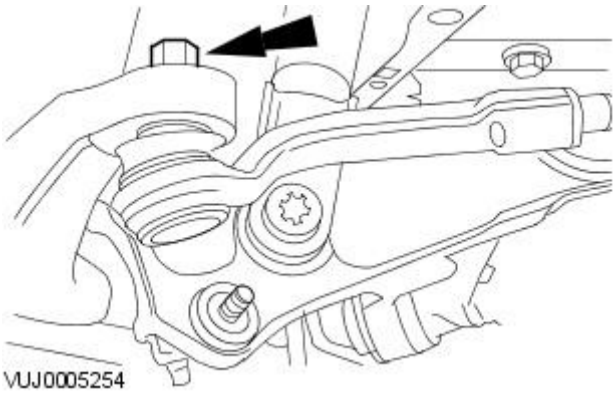


**5.** Detach the tie rod end.

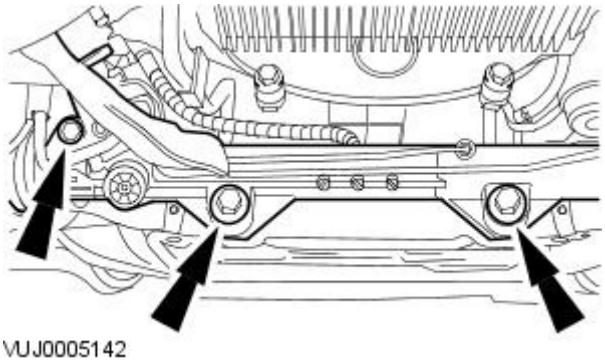


**6.** Detach the steering gear.

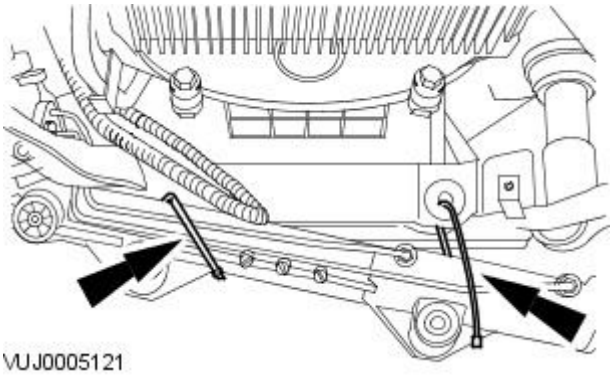


**7.** Secure the steering gear.

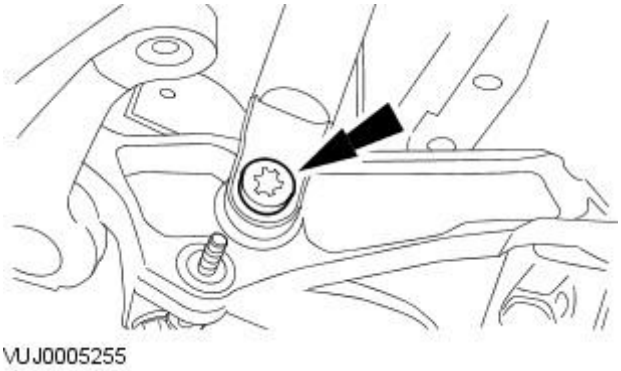


**8.** Detach the shock absorber and spring assembly.

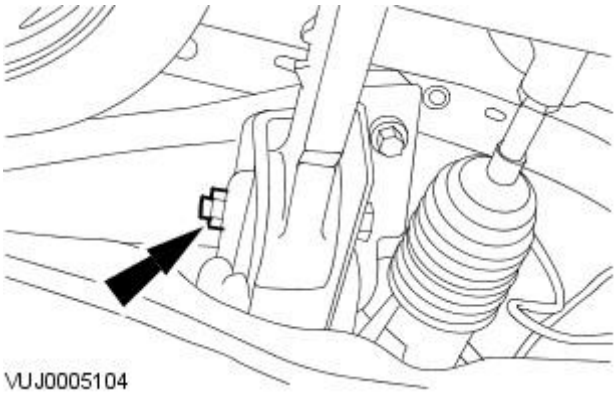


**9.** Detach the rear lower.

GETtheMANUALS.org

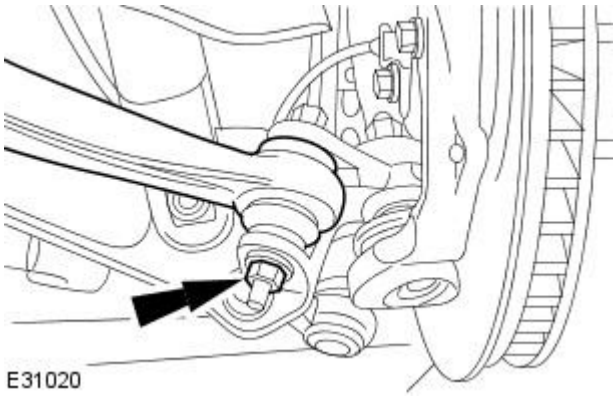


**10.** Detach the front lower arm.

- Remove and discard the retaining nut and bolt.

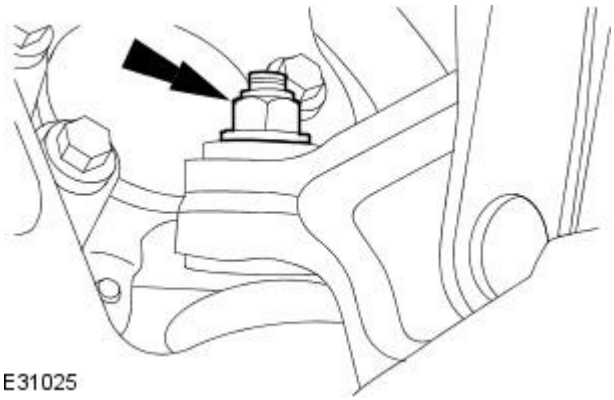


**11.** CAUTION: Prevent the rear lower arm ball joint ball pin hexagon from rotating. Failure to follow this instruction may result in damage to the lower ball joint boot.

Loosen the rear lower arm ball joint retaining nut.

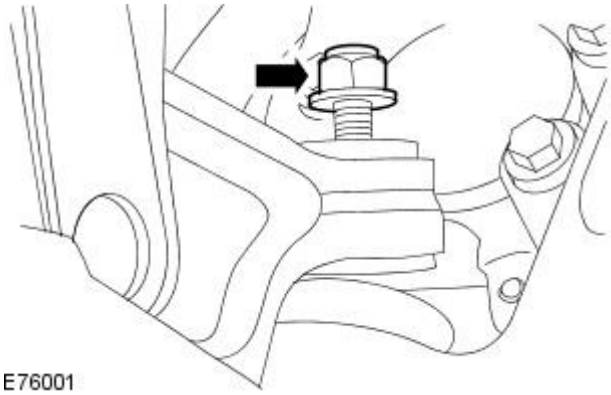


**12.** CAUTION: Prevent the rear lower arm ball joint ball pin hexagon from rotating. Failure to follow this instruction may result in damage to the lower ball joint boot.

Adjust the rear lower arm ball joint retaining nut until the ball joint thread cannot be seen.

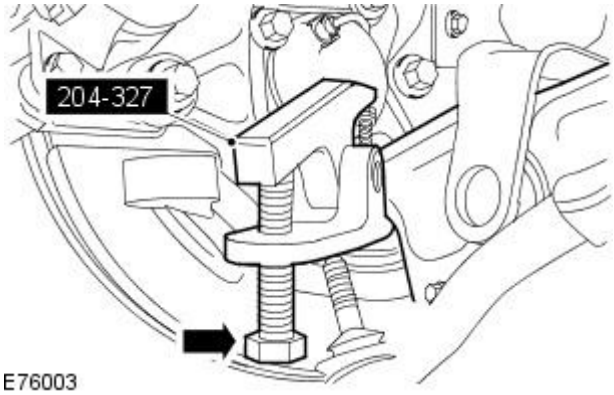


**13.** WARNING: Make sure the special tool is supported while carrying out the operation. Failure to follow this instruction may result in personal injury.

• CAUTIONS:

Make sure the special tool is supported while carrying out the operation. Failure to follow this instruction may result in damage to the special tool.

Make sure the special tool is correctly located and the lower ball joint boot is not damaged while carrying out the operation. Failure to follow this instruction may result in damage to the component.

Using the special tool, release the rear lower arm ball joint from the wheel knuckle lower pivot.

**13.** CAUTION: Make sure the special tool is not over tightened while carrying out the operation. Failure to follow this instruction may result in damage to the special tool.

- Tighten the special tool adjusting bolt to a maximum of 60 Nm.
- If the rear lower arm ball joint releases from the wheel knuckle lower pivot using no more than 60 Nm on the special tool adjusting bolt, proceed to step 15.
- If the rear lower arm ball joint does not release from the wheel knuckle lower pivot using no more than 60 Nm on the special tool adjusting bolt, proceed to step 14.

GETtheMANUALS.org

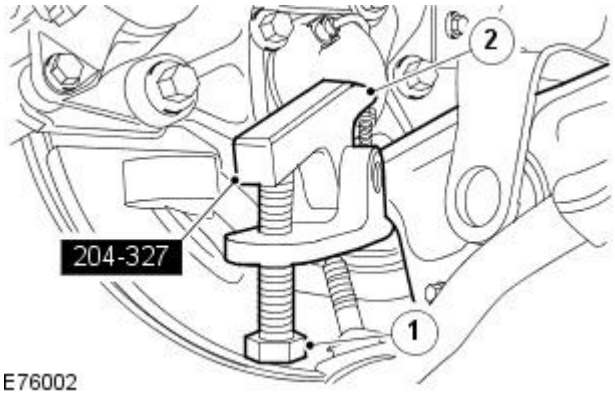


**14.** WARNING: Make sure the special tool is supported while carrying out the operation. Failure to follow this instruction may result in personal injury.

• CAUTIONS:

Make sure the special tool is supported while carrying out the operation. Failure to follow this instruction may result in damage to the special tool.

Make sure the special tool is correctly located and the lower ball joint boot is not damaged while carrying out the operation. Failure to follow this instruction may result in damage to the component.

• NOTE: Do not carry out this step if the rear lower arm ball joint released from the wheel knuckle lower pivot in step 13.

Using the special tool, release the rear lower arm ball joint from the wheel knuckle lower pivot.

**14.** CAUTION: Make sure the special tool is not over tightened while carrying out the operation. Failure to follow this instruction may result in damage to the special tool.

1. Tighten the special tool adjusting bolt to a maximum of 60 Nm.
2. Strike the top surface of the special tool directly above the rear lower arm ball joint at the point indicated using a copper and hide mallet.

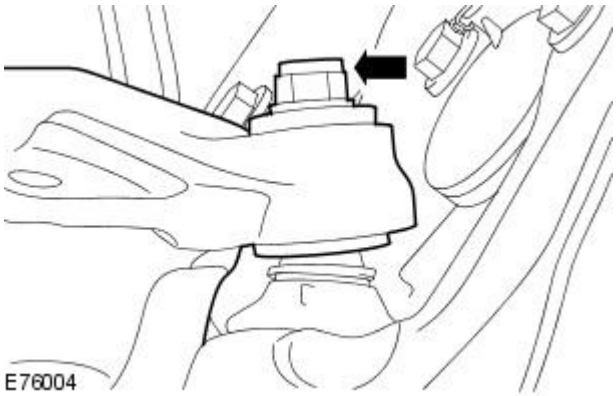


**15.** CAUTION: Prevent the rear lower arm ball joint ball pin hexagon from rotating. Failure to follow this instruction may result in damage to the lower ball joint boot.

Remove the rear lower arm.

- Remove and discard the retaining nut.

## Installation

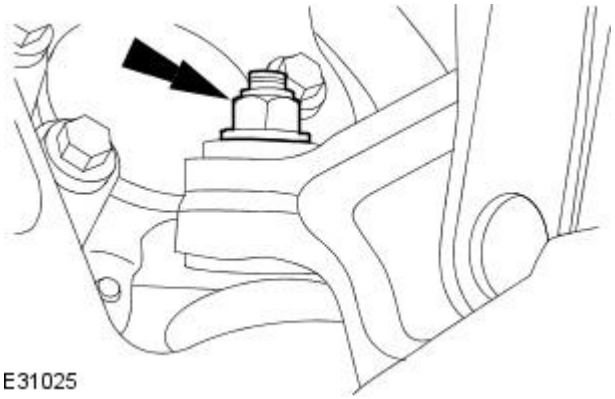


**1.** CAUTION: Prevent the rear lower arm ball joint ball pin hexagon from rotating. Failure to follow this instruction may result in damage to the lower ball joint boot.

• NOTE: Install a new retaining nut.

Attach the rear lower arm.

- Tighten to 92 Nm.

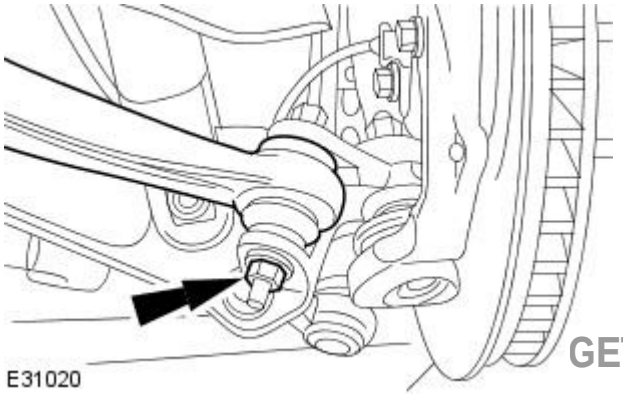


**2.** NOTE: Install a new retaining nut and bolt.

Attach the front lower arm.

- Stage 1: Tighten to 60 Nm.
- Stage 2: Tighten 135°.

GETtheMANUALS.org

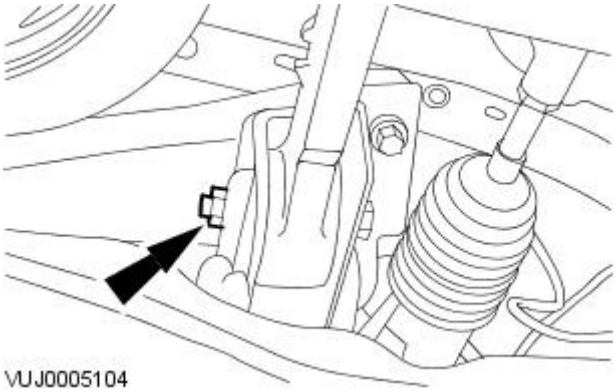


**3.** Attach the rear lower arm.

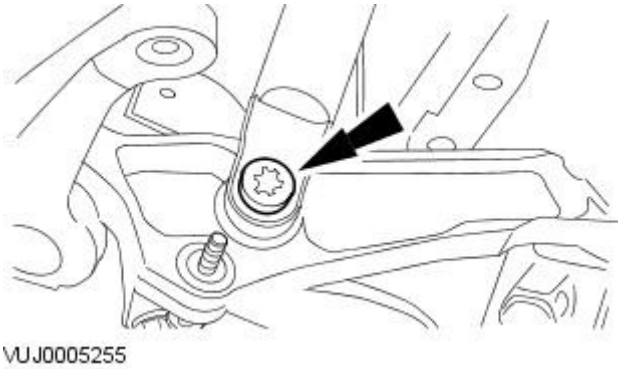


**4.** Attach the shock absorber and spring assembly.

- Tighten to 175 Nm.

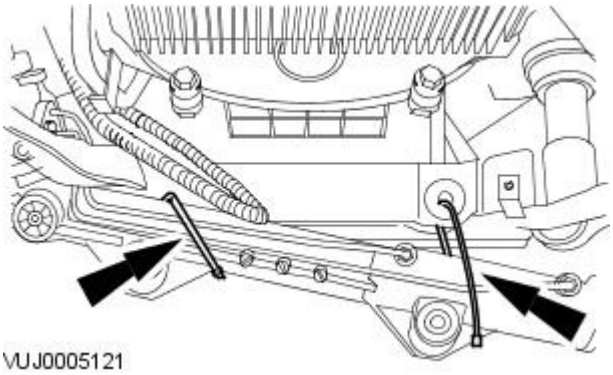


**5.** Remove and discard the retaining straps.

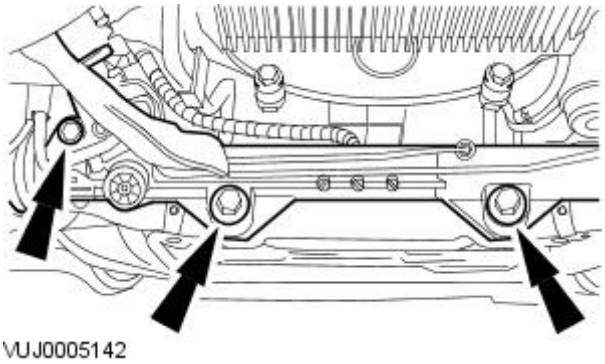


**6.** Attach the steering gear.

- Tighten to 100 Nm.

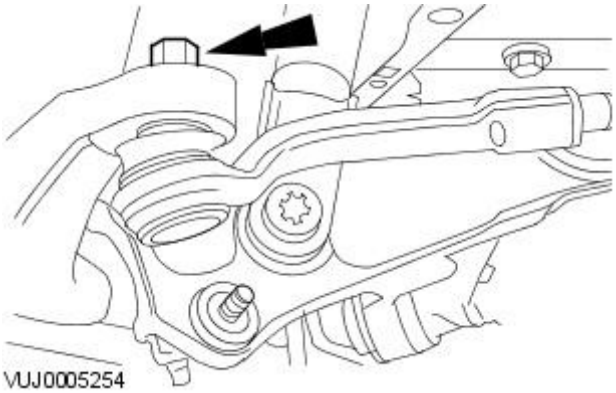


**7.** Attach the tie rod end.

- Tighten to 55 Nm.

GETtheMANUALS.org

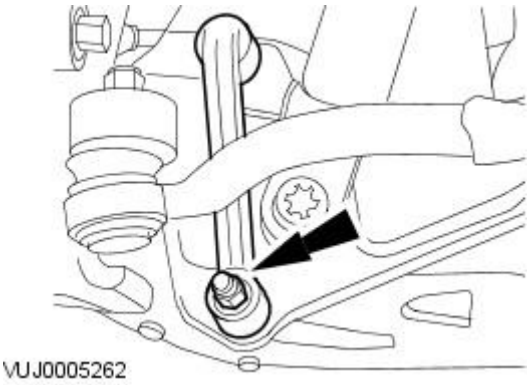


**8.** Install the stabilizer bar link.

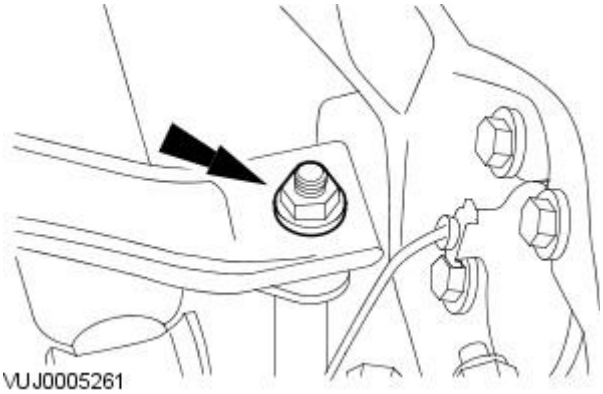


**9.** Attach the stabilizer bar link.

- Tighten to 47 Nm.

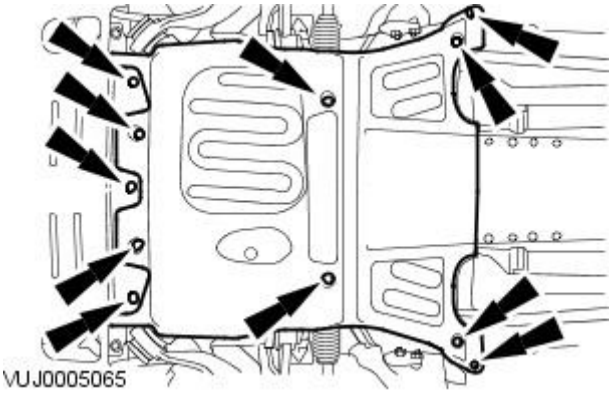


**10.** Install the air deflector.

**11.** Install the wheel and tire.
For additional information, refer to: Wheel and Tire (204-04 Wheels and Tires, Removal and Installation).

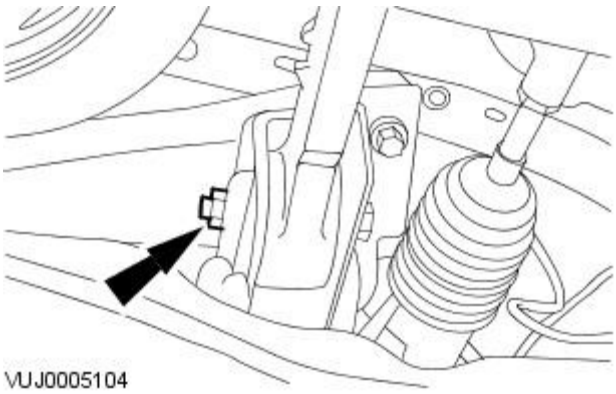


**12.** CAUTION: The final tightening of the rear lower arm inner retaining nut and bolt must be carried out with the vehicle on its wheels.

Tighten to 175 Nm.

GETtheMANUALS.org

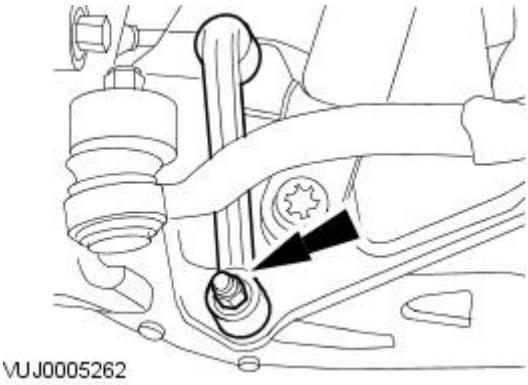


**13.** Tighten to 70 Nm.

**14.** Carry out the camber and caster adjustment.
For additional information, refer to: Camber and Caster Adjustment (204-00 Suspension System - General Information, General Procedures).

GETtheMANUALS.org

# Front Suspension - Rear Lower Arm Bushing

Removal and Installation

| Special Tool(s) | |
|---|---|
| 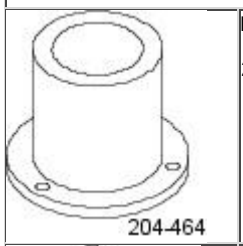  | Rear Lower Arm Bushing Remover and Installer<br><br>204-464 |
| 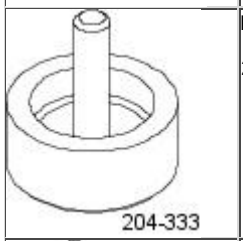  | Rear Lower Arm Bushing Remover<br><br>204-333 |
| 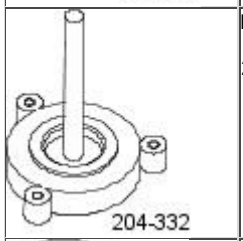  | Rear Lower Arm Bushing Installer<br><br>204-332 |
| 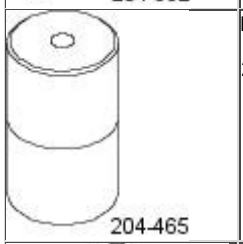  | Rear Lower Arm Bushing Installer<br><br>204-465 |
| 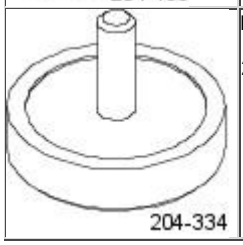  | Rear Lower Arm Bushing Installer<br><br>204-334 |

## Removal

1. Remove the rear lower arm.
   For additional information, refer to Rear Lower Arm in this section.
2. Using the special tools remove the rear lower arm bushing.

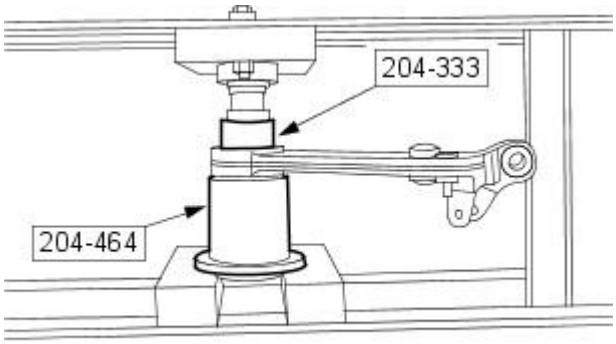


E30798

## Installation

GETtheMANUALS.org

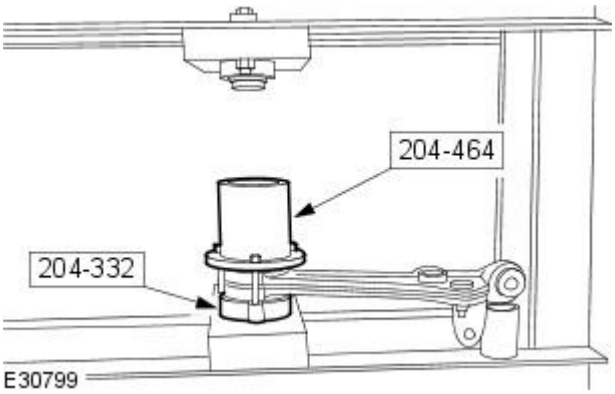


**1.** Install the special tools to the rear lower arm.

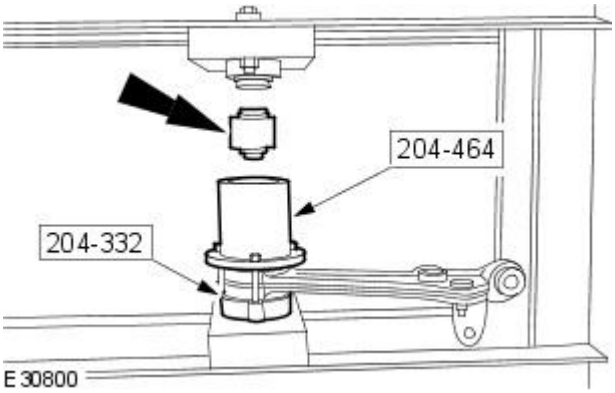


**2.** Install the rear lower arm bushing to the special tool.

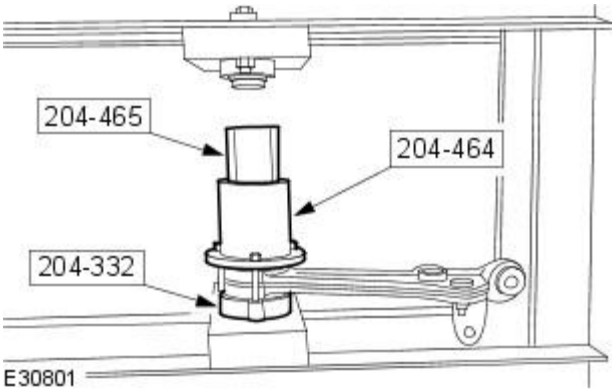


**3.** Using the special tools, partially install the rear lower arm bushing.

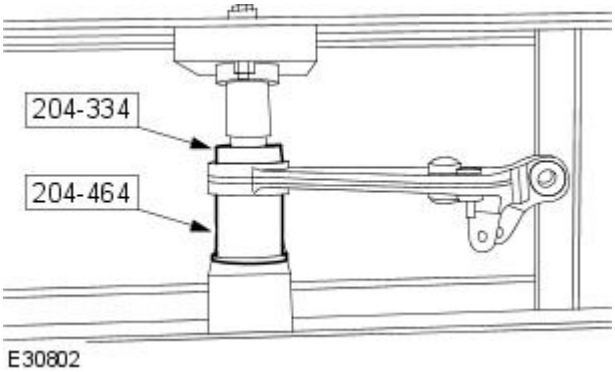


**4.** Using the special tool, completely install the rear lower arm bushing.

**5.** Install the rear lower arm.
For additional information, refer to Rear Lower Arm in this section.

GETtheMANUALS.org

# Front Suspension - Shock Absorber and Spring Assembly

Removal and Installation

## Removal

**1.** Remove the wheel and tire.
For additional information, refer to Section 204-04 Wheels and Tires.

**2.** Remove the stabilizer bar link retaining nut.

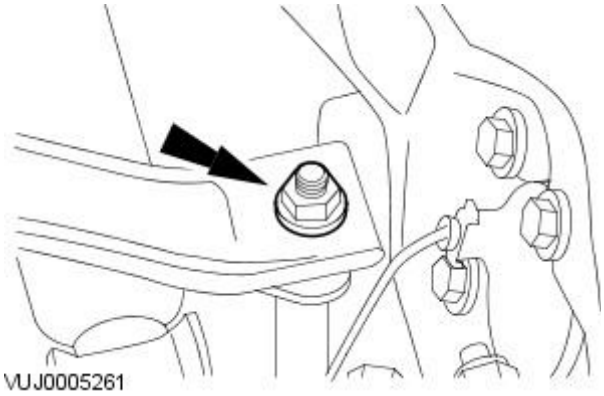


**3.** Remove the stabilizer bar link.

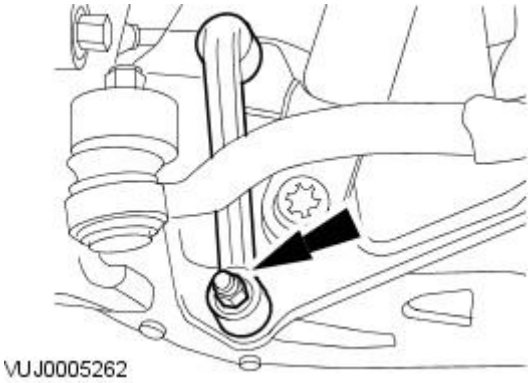


**4.** Detach the shock absorber.

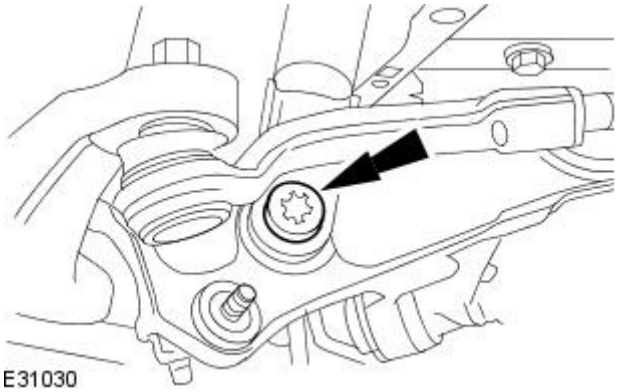


**5.** CAUTION: Make sure the wheel knuckle is supported. Failure to follow these instructions may result in damage to the vehicle.

Detach the upper arm.

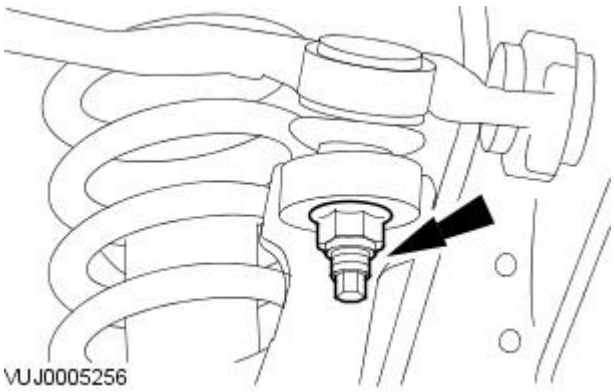


**6.** Lower the vehicle.

GETtheMANUALS.org

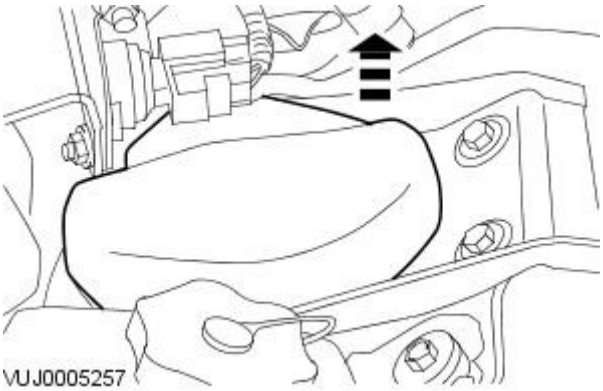


**7.** Remove the shock absorber and spring assembly mounting cover plate.

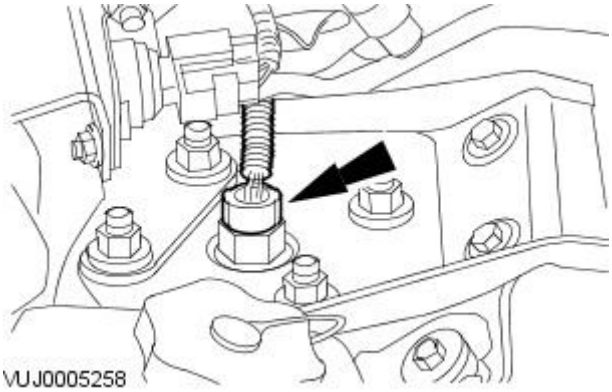


**8.** Disconnect the electrical connector.

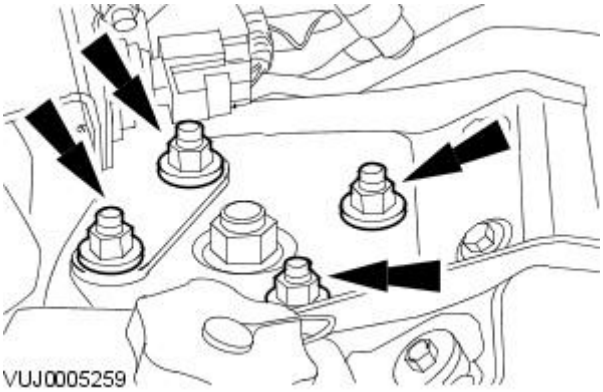


**9.** Remove the shock absorber and spring assembly.

## Installation

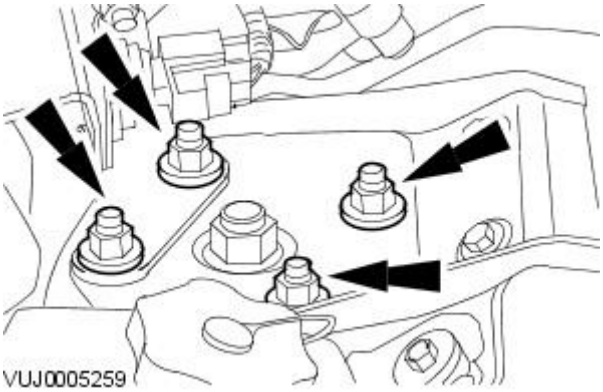


**1.** Install the shock absorber and spring assembly.

1. Tighten to 27 Nm.

GETtheMANUALS.org

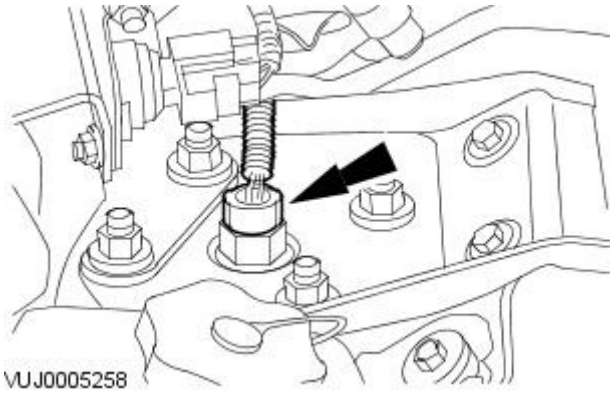


**2.** Connect the electrical connector.

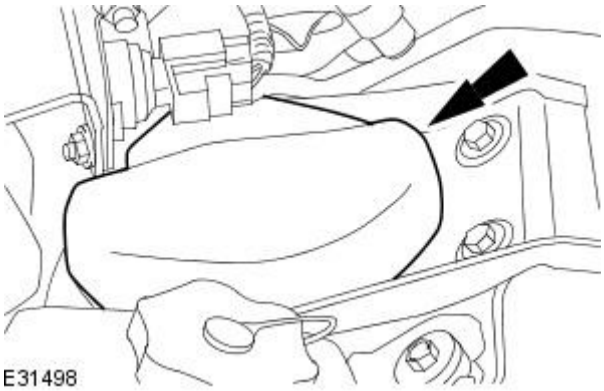


**3.** Install the shock absorber and spring assembly mounting cover plate.

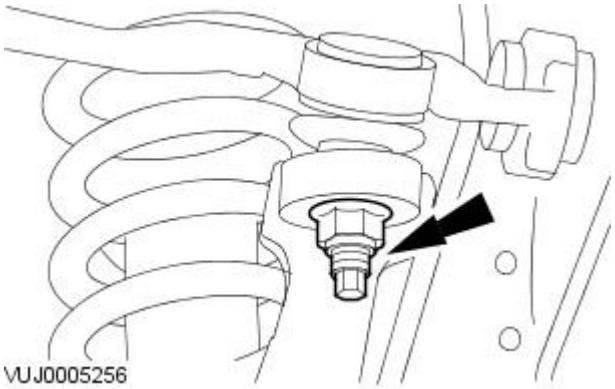


**4.** CAUTION: Make sure the wheel knuckle is supported. Failure to follow these instructions may result in damage to the vehicle.

Attach the upper arm.

1. Tighten to 90 Nm.

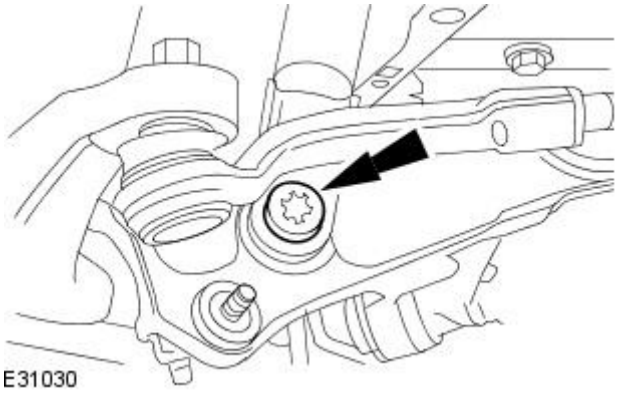


**5.** Attach the shock absorber.

- Tighten to 175 Nm.

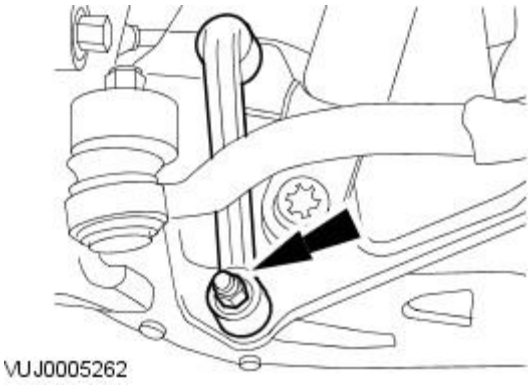


**6.** Install the stabilizer bar link.

GETtheMANUALS.org

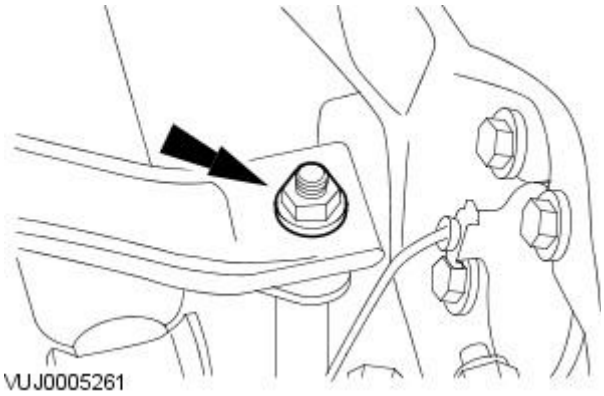


7. Attach the stabilizer bar link.
   - Tighten to 47 Nm.

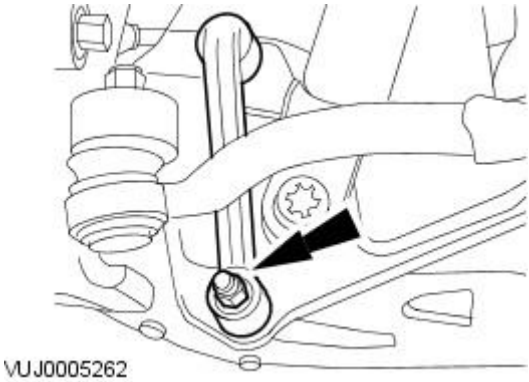


8. Install the wheel and tire assembly.
   For additional information, refer to Section 204-04 Wheels and Tires.
9. Tighten to 70 Nm.

GETtheMANUALS.org

# Front Suspension - Shock Absorber Bushing

Removal and Installation

| Special Tool(s) | |
|---|---|
| 204-335 | Shock Absorber Bushing Remover<br><br>204-335 |
| 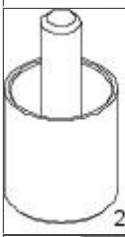 204-336 | Shock Absorber Bushing Remover<br><br>204-336 |
| 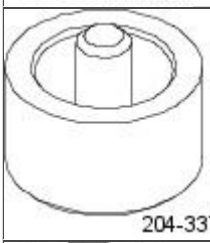 204-337 | Shock Absorber Bushing Installer<br><br>204-337 |
| 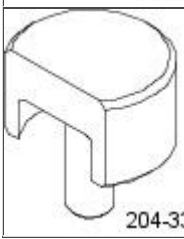 204-338 | Shock Absorber Bushing Installer<br><br>204-338 |

## Removal

CAUTION: Make sure the supporting tools are orientated correctly to the rear lower arm. Failure to follow this instruction may cause damage to the component.

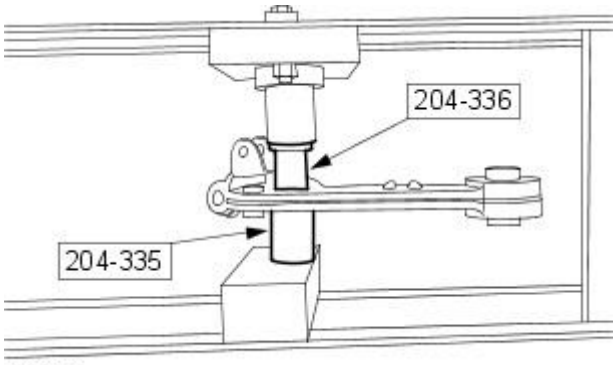

E30779

1. Remove the rear lower arm.
   For additional information, refer to Rear Lower Arm in this section.
2. Using the special tools remove the shock absorber bushing.

## Installation

CAUTION: Make sure the supporting tools are orientated correctly to the rear lower arm. Failure to follow this instruction may cause damage to the component.

GETtheMANUALS.org

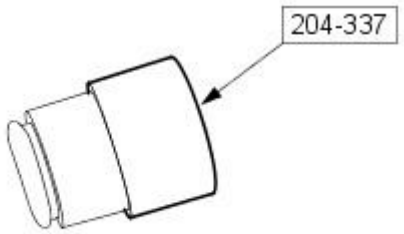


E30781

**1.** NOTE: Make sure the shock absorber bushing boot is correctly located into the special tool.

Install the shock absorber bushing to the special tool.

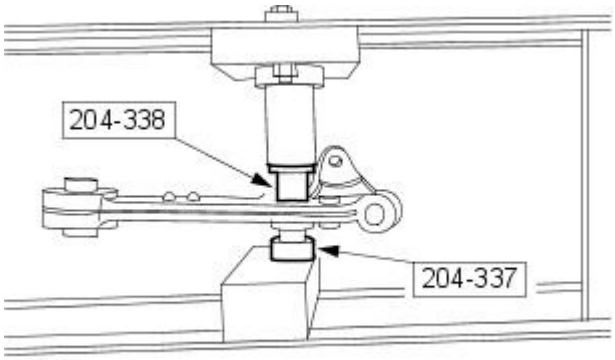


E30782

**2.** Using the special tools install the shock absorber bushing.

**3.** Install the rear lower arm.
For additional information, refer to Rear Lower Arm in this section.

GETtheMANUALS.org

# Front Suspension - Front Stabilizer Bar2.5L NA V6 - AJV6 / 3.0L NA V6 - AJ27

Removal and Installation

| Special Tool(s) | |
|---|---|
| 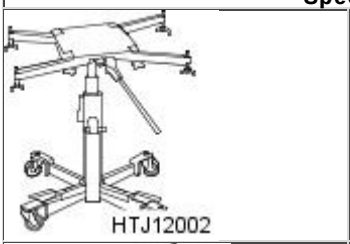  | Powertrain Assembly Jack<br><br>HTJ1200-02 |
| 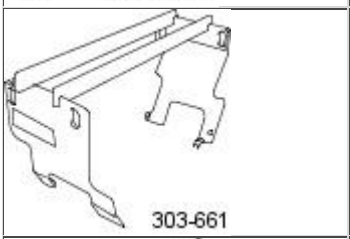  | Engine lifting Bracket<br><br>303-661 |
| 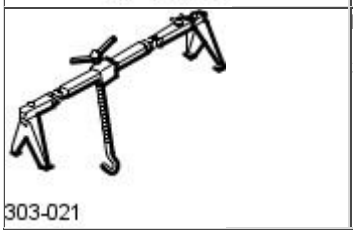  | Engine Support Bracket<br><br>303-021 |

## Removal

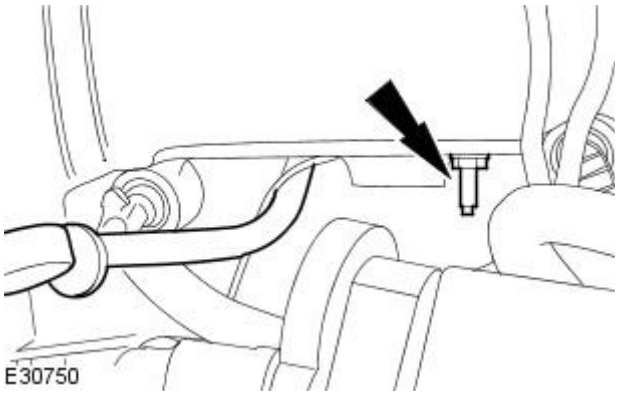


**1.** Reposition the dipstick tube.

- Remove the dipstick tube retaining bolt.

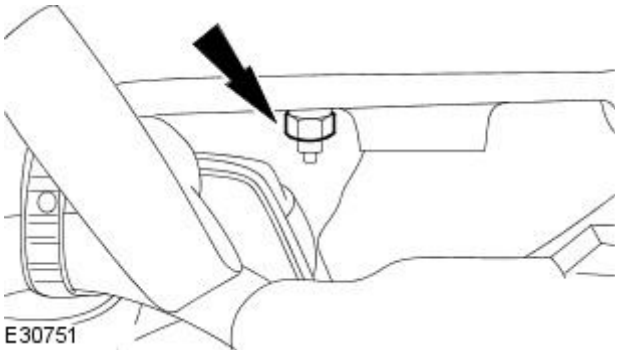


**2.** NOTE: Left-hand shown, right-hand similar.

Loosen the exhaust manifold retaining nut.

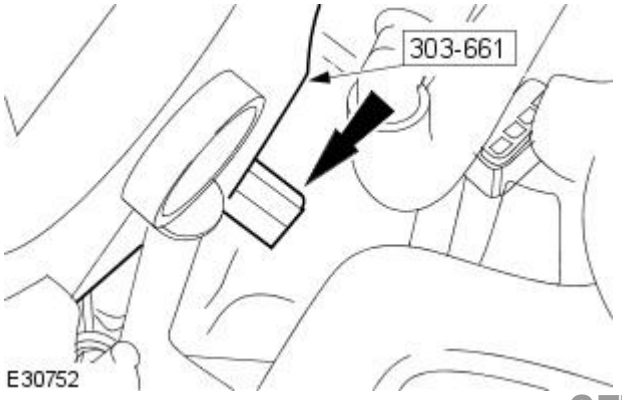


**3.** NOTE: Left-hand shown, right-hand similar.

Install the special tool to the exhaust manifold.

- Install the retaining bolt.

GETtheMANUALS.org

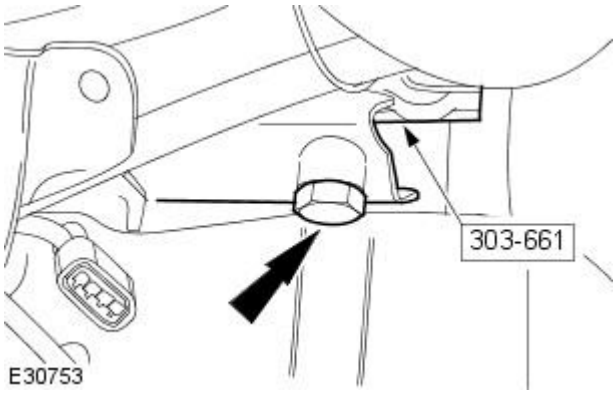


**4.** NOTE: Left-hand shown, right-hand similar.

Install the retaining bolt.

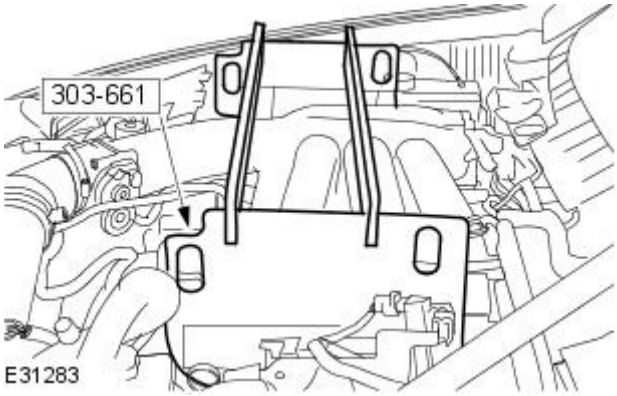


**5.** Install the special tool support bars to the special tool.

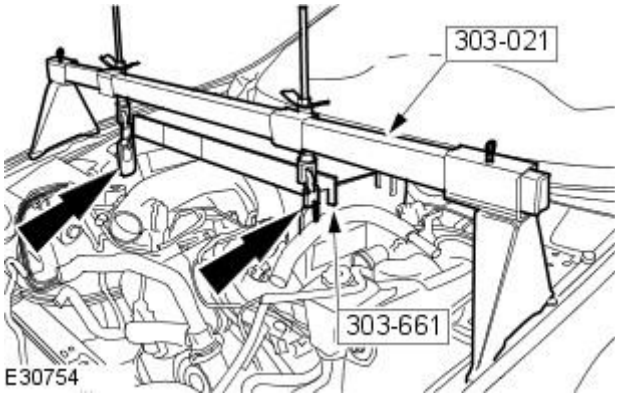


**6.** Install the special tool.

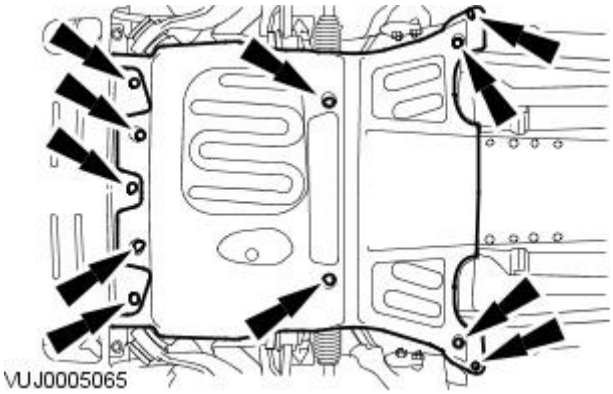


**7.** Remove the air deflector.

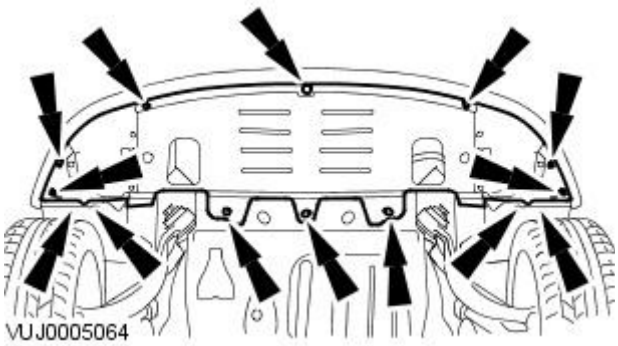


**8.** Remove the radiator splash shield.

GETtheMANUALS.org

**9.** Remove both the front wheel and tires.
For additional information, refer to Section 204-04 Wheels and Tires.

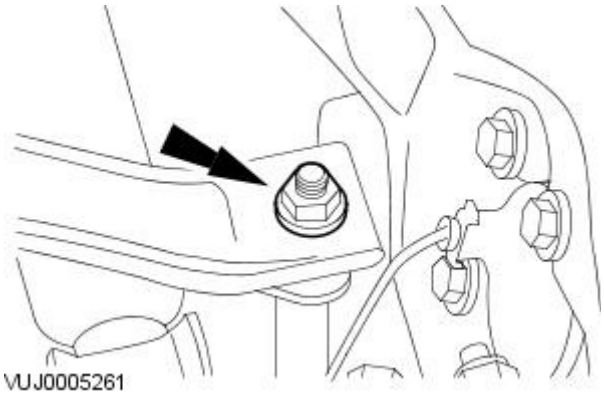


**10.** NOTE: Left-hand shown, right-hand similar.

Remove the stabilizer bar link retaining nut.

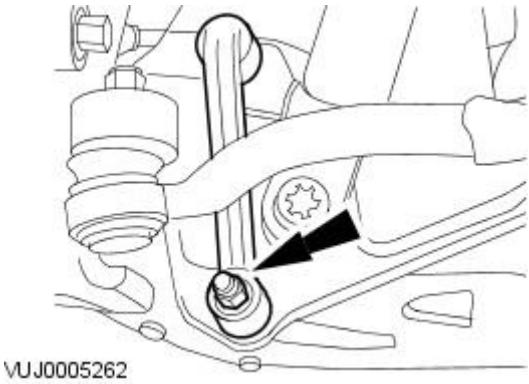


**11.** NOTE: Left-hand shown, right-hand similar.

Remove the stabilizer bar link.

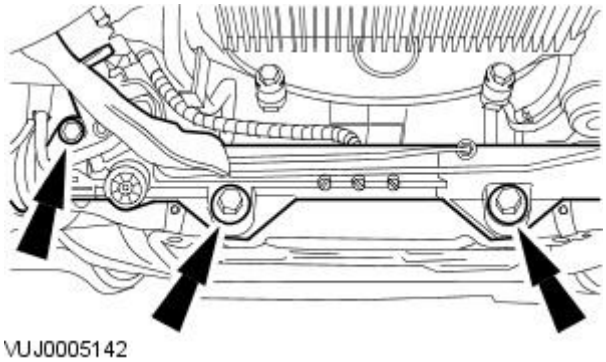


**12.** Detach the steering gear.

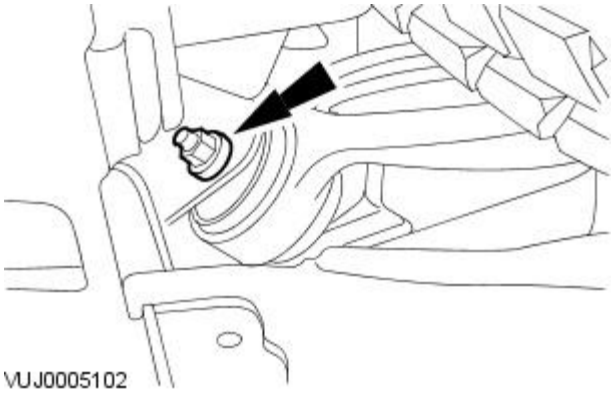


**13.** NOTE: Left-hand shown, right-hand similar.

Loosen the front lower arm retaining nut and bolt.

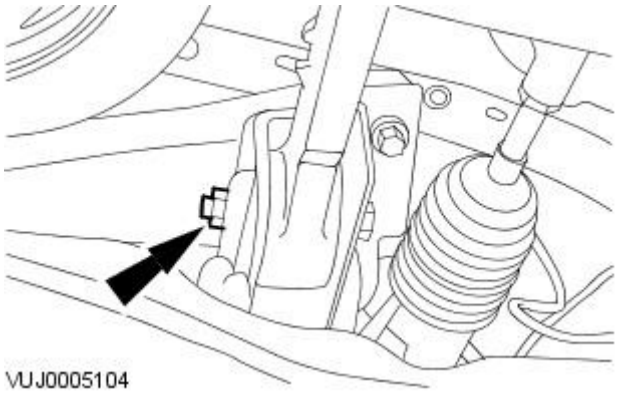


**14.** NOTE: Left-hand shown, right-hand similar.

Loosen the rear lower arm retaining nut and bolt.

GETtheMANUALS.org

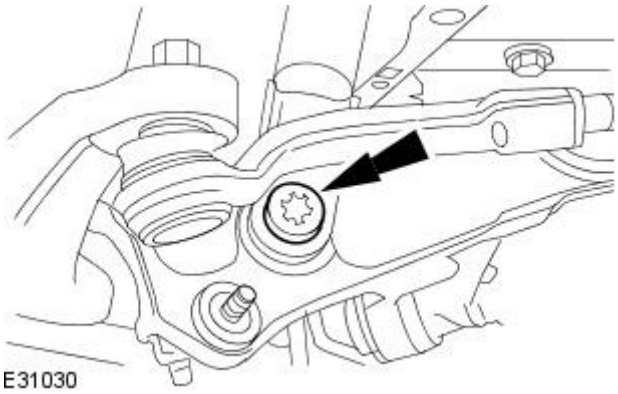


**15.** NOTE: Left-hand shown, right-hand similar.

Detach the shock absorber and spring assembly.

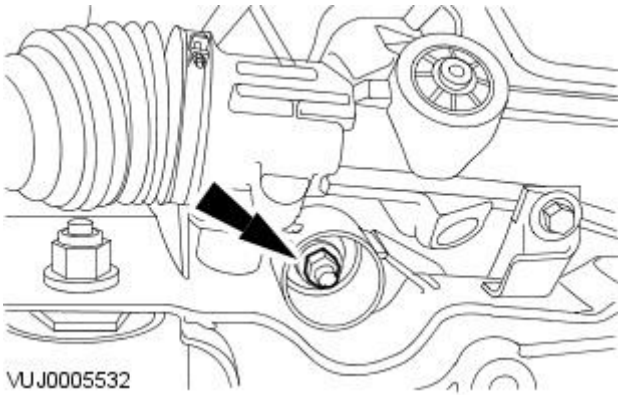


**16.** NOTE: Left-hand shown, right-hand similar.

Detach the engine mount.

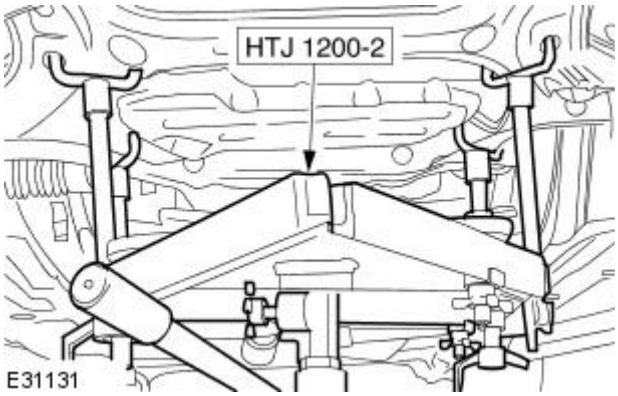


**17.** Install the special tool.

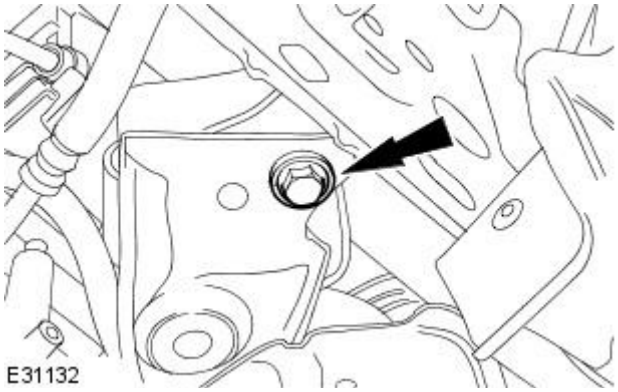


**18.** NOTE: Left-hand shown, right-hand similar.

Remove the front subframe front retaining bolt.

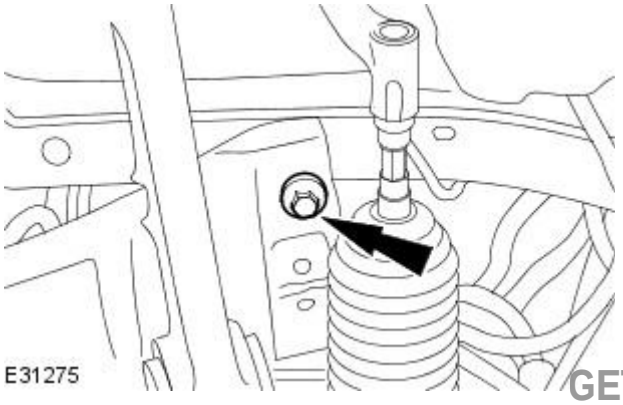


**19.** NOTE: Left-hand shown, right-hand similar.

Remove the front subframe rear retaining bolt.

GETtheMANUALS.org

**20.** Lower the special tool by approximately 200 mm (7.9 in).

**21.** NOTE: Left-hand shown, right-hand similar.

Remove the stabilizer bar clamp.

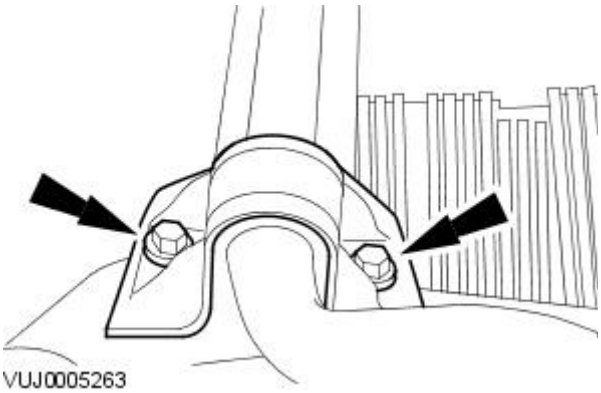


**22.** Remove the stabilizer bar.

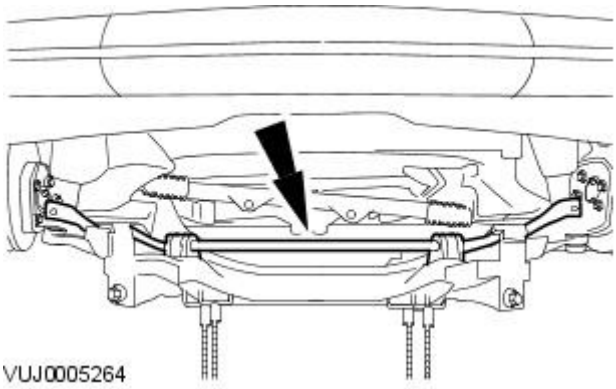


## Installation

**1.** Install the stabilizer bar

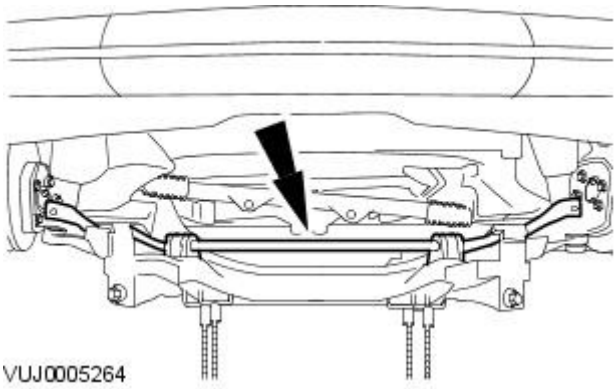


**2.** NOTE: Left-hand shown, right-hand similar.

Install the stabilizer bar clamp.

- Tighten to 55 Nm.

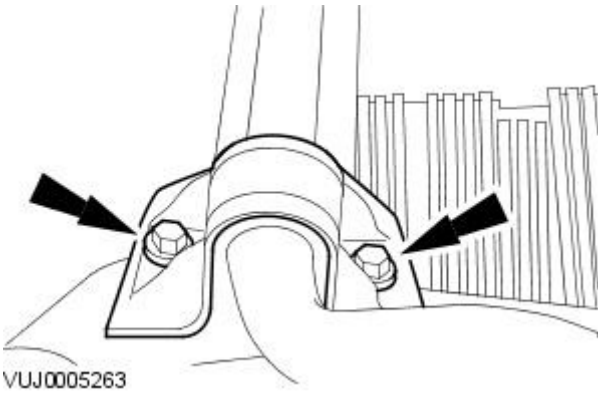


GETtheMANUALS.org

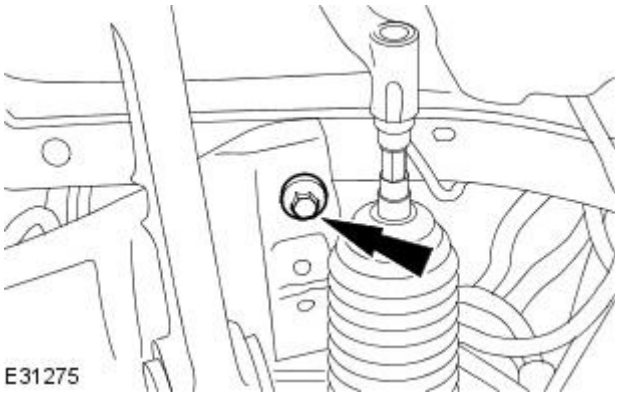


**3.** NOTE: Left-hand shown, right-hand similar.

Install the front subframe rear retaining bolt.

- Tighten to 115 Nm.

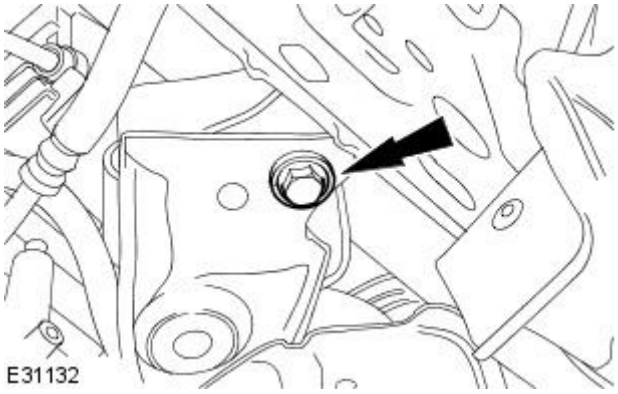


**4.** NOTE: Left-hand shown, right-hand similar.

Install the front subframe front retaining bolt.

- Tighten to 200 Nm.

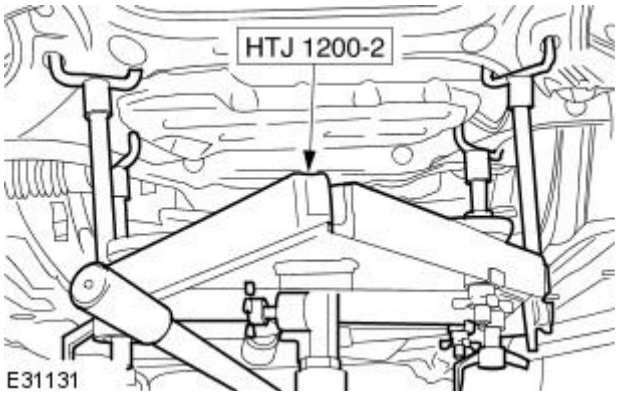


**5.** Remove the special tool.

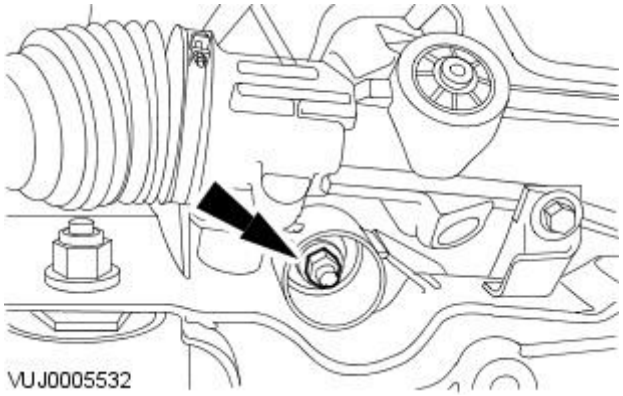


**6.** NOTE: Left-hand shown, right-hand similar.

Attach the engine mount.

- Tighten to 63 Nm.

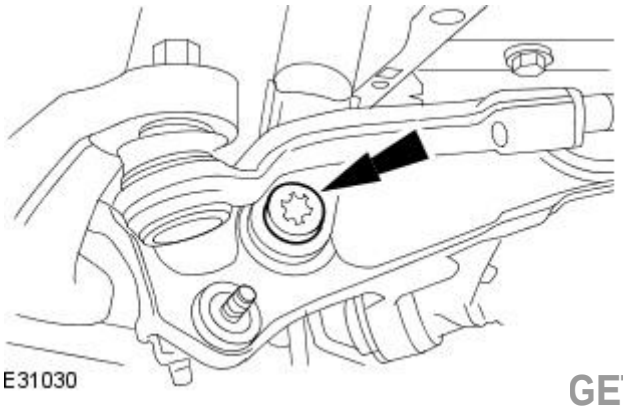


**7.** NOTE: Left-hand shown, right-hand similar.

Attach the shock absorber and spring assembly.

1. Tighten to 175 Nm.

GETtheMANUALS.org

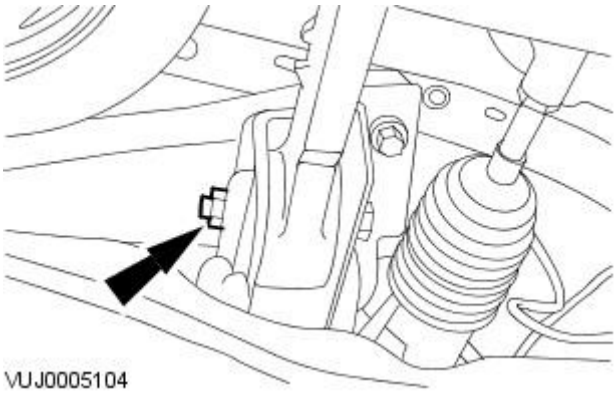


**8.** NOTE: Left-hand shown, right-hand similar.

Tighten the rear lower arm retaining nut and bolt.

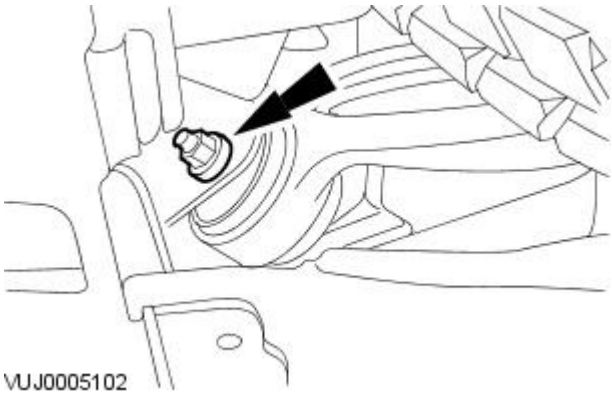


**9.** NOTE: Left-hand shown, right-hand similar.

Tighten the front lower arm retaining nut and bolt.

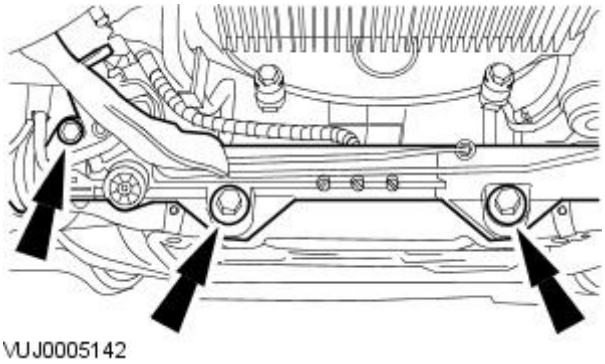


**10.** Install the steering gear.

1. Tighten to 100 Nm.

• NOTE: Left-hand shown, right-hand similar.

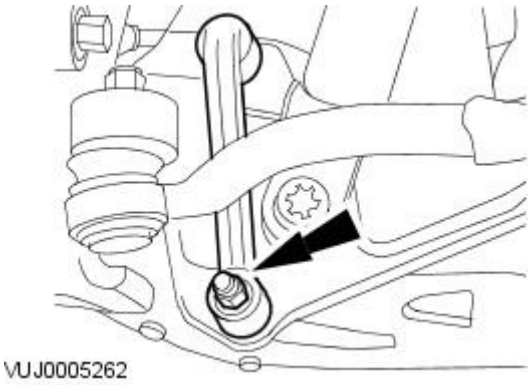


**11.** Install the stabilizer bar link.

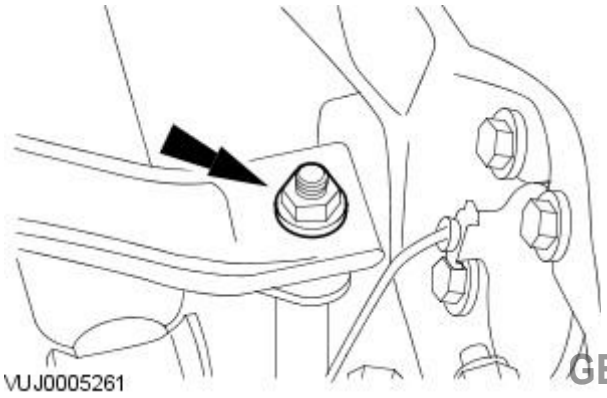


**12.** NOTE: Left-hand shown, right-hand similar.

Attach the stabilizer bar link.

- Tighten to 47 Nm.

GETtheMANUALS.org

**13.** Check the front subframe alignment.
For additional information, refer to Section 502-00 Uni-Body, Subframe and Mounting System.

**14.** Install both the front wheel and tires.
For additional information, refer to Section 204-04 Wheels and Tires.

**15.** Install the radiator splash shield.

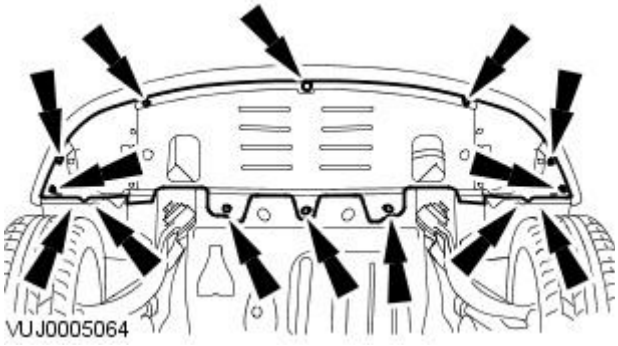


**16.** Remove the air deflector.

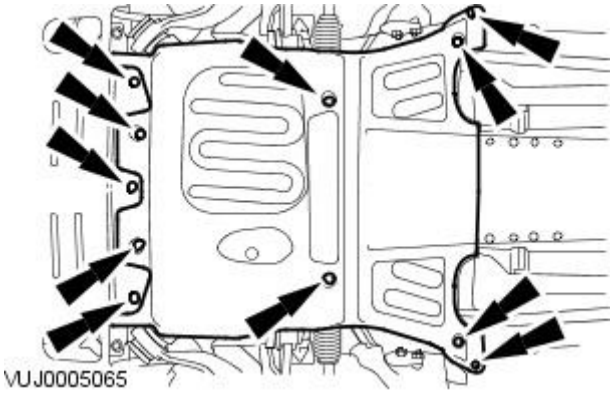


**17.** CAUTION: The final tightening of the rear lower arm inner retaining nut and bolt must be carried out with the vehicle on its wheels.

- NOTE: Left-hand shown, right-hand similar.

Tighten to 175 Nm.

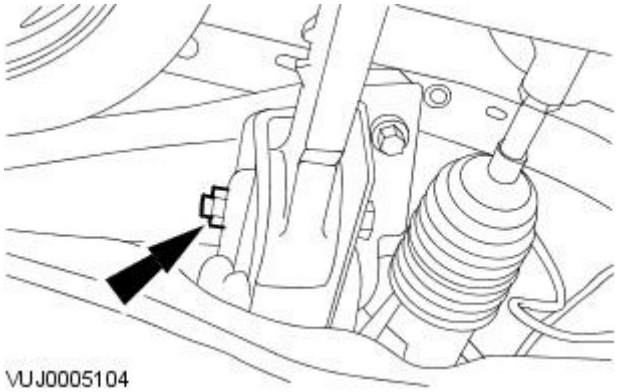


**18.** CAUTION: The final tightening of the rear lower arm inner retaining nut and bolt must be carried out with the vehicle on its wheels.

- NOTE: Left-hand shown, right-hand similar.

Tighten to 175 Nm.

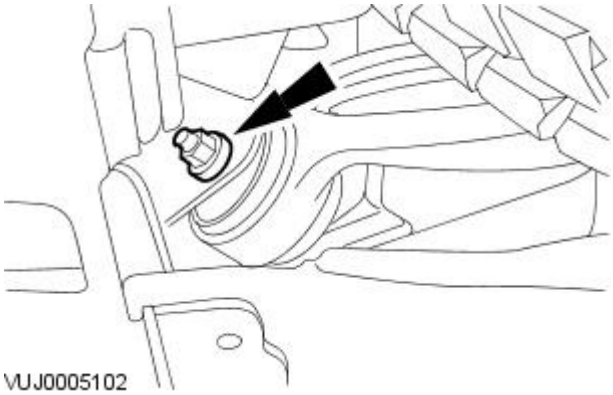


GETtheMANUALS.org

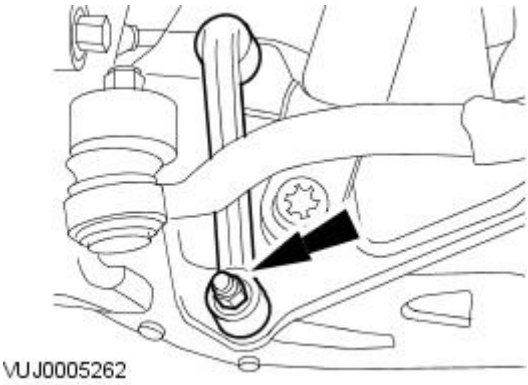


**19.** NOTE: Left-hand shown, right-hand similar.

Tighten to 70 Nm.

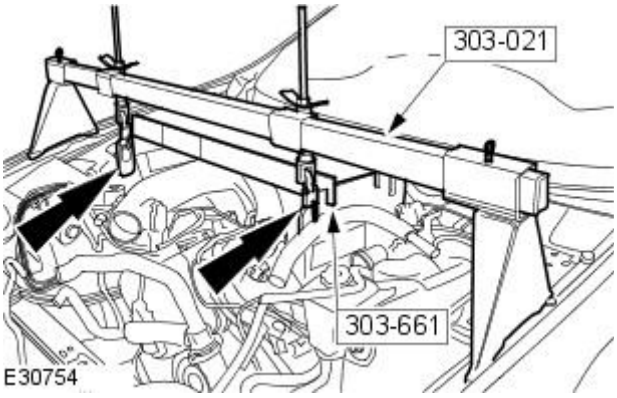


**20.** Remove the special tool.

- Loosen the special tool adjustment bolts.

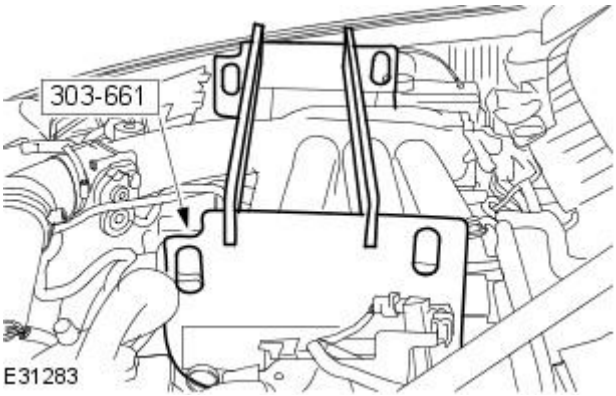


**21.** Remove the special tool support bars from the special tool.

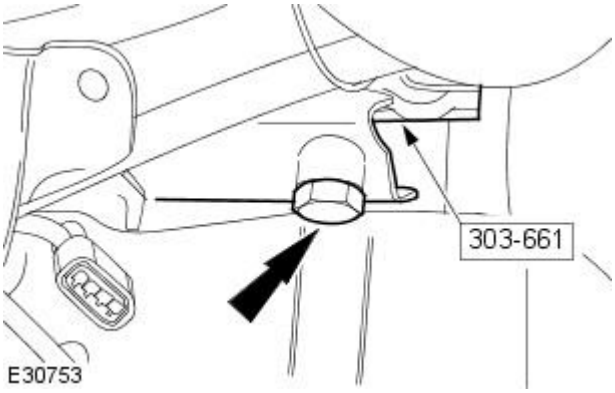


**22.** NOTE: Left-hand shown, Right-hand similar.

Remove the retaining bolt.

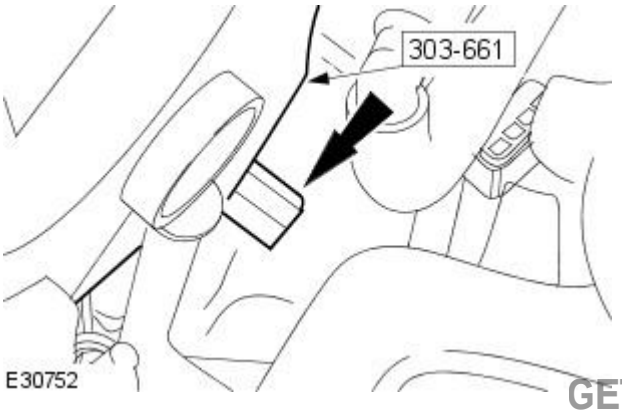


**23.** NOTE: Left-hand shown, Right-hand similar.

Remove the special tool from the exhaust manifold.

- Remove the retaining bolt.

GETtheMANUALS.org

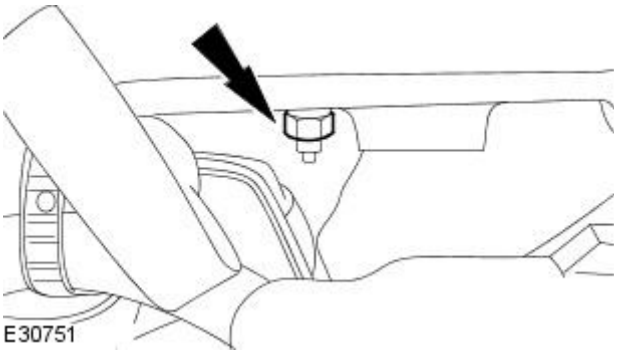


**24.** NOTE: Left-hand shown, Right-hand similar.

Tighten the exhaust manifold retaining nut.

- Tighten to 20 Nm.

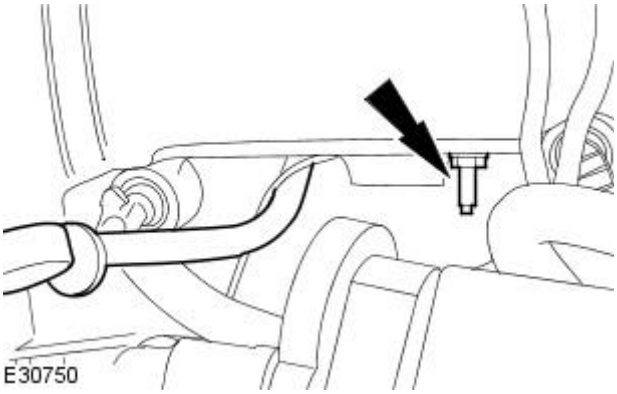


**25.** Reposition the dipstick tube.

- Remove the dipstick tube retaining bolt.
- Tighten to 10 Nm.

GETtheMANUALS.org

# Front Suspension - Front Stabilizer Bar2.7L V6 - TdV6

Removal and Installation

| Special Tool(s) | |
|---|---|
| 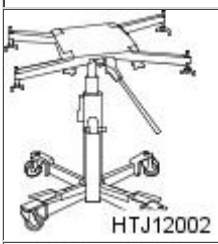 HTJ12002 | Powertrain Assembly Jack<br><br>HTJ1200-2 |
| E52720 | Engine Lifting Brackets<br><br>303-1129 |
| 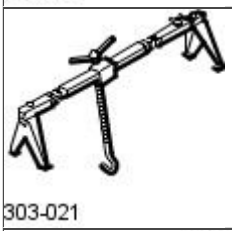 303-021 | Engine Support Bracket<br><br>303-021 |
| 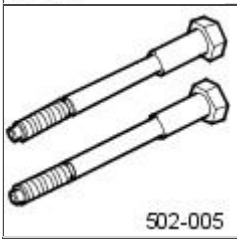 502-005 | Subframe Alignment Bolt<br><br>502-005 |

## Removal

All vehicles

1. Remove the intake air shutoff throttle.
   For additional information, refer to: Intake Air Shutoff Throttle (303-04C Fuel Charging and Controls - 2.7L V6 - TdV6, Removal and Installation).
2. Install the special tool.

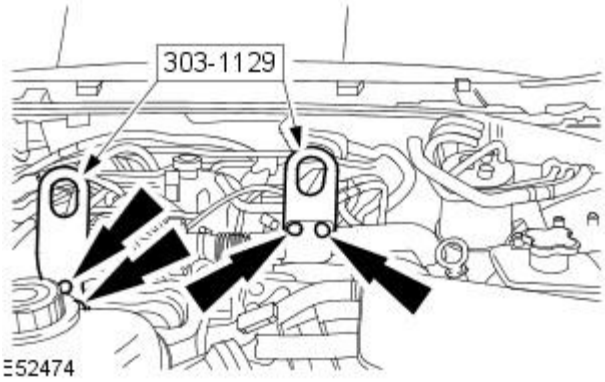


3. Install the special tool.

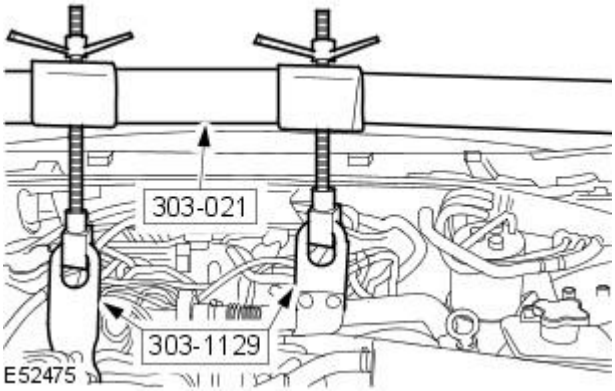


GETtheMANUALS.org

4. Remove the air deflector.
   For additional information, refer to: Air Deflector (501-02 Front End Body

Panels, Removal and Installation).

5. Remove the radiator splash shield.
For additional information, refer to: Radiator Splash Shield (501-02 Front End Body Panels, Removal and Installation).

6. Remove both the front wheel and tires.
For additional information, refer to: Wheel and Tire (204-04 Wheels and Tires, Removal and Installation).

Vehicles with automatic transmission

7. Remove the transmission fluid cooler.
For additional information, refer to: Transmission Fluid Cooler (307-02 Transmission/Transaxle Cooling, Removal and Installation).

All vehicles

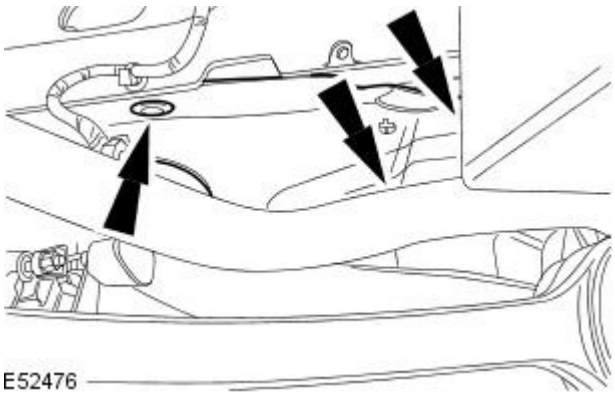


8. Remove the right-hand splash shield.

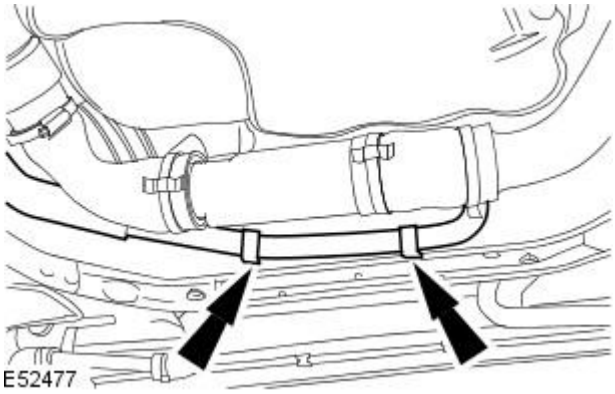


9. Detach the engine coolant inlet pipe from the front subframe.

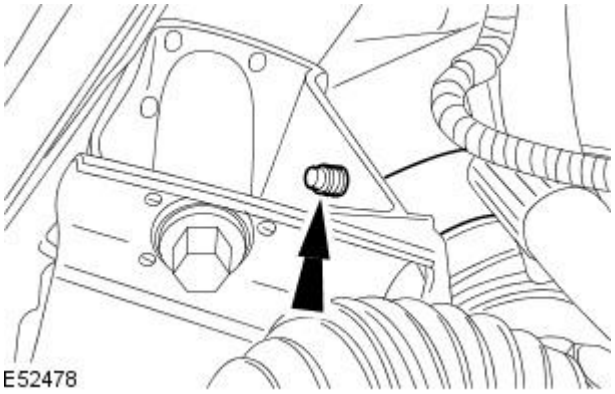


10. Detach the power steering hose retaining clip from the front subframe.

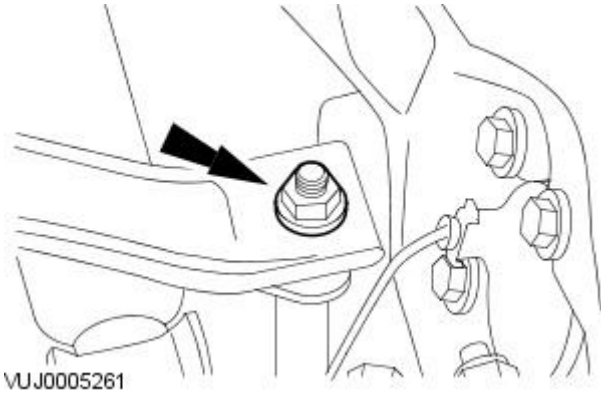


11. NOTE: Left-hand shown, right-hand similar.

Remove the stabilizer bar link upper retaining nut.

GETtheMANUALS.org

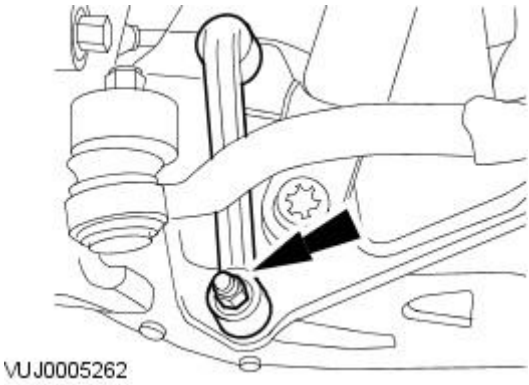


**12.** NOTE: Left-hand shown, right-hand similar.

Remove the stabilizer bar link lower retaining bolt and nut and remove the stabilizer bar link.

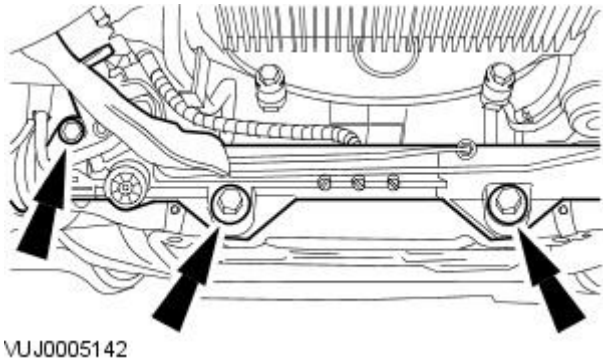


**13.** CAUTION: The steering gear must be supported. Failure to follow this instruction may result in damage to the steering gear.

Detach the steering gear.

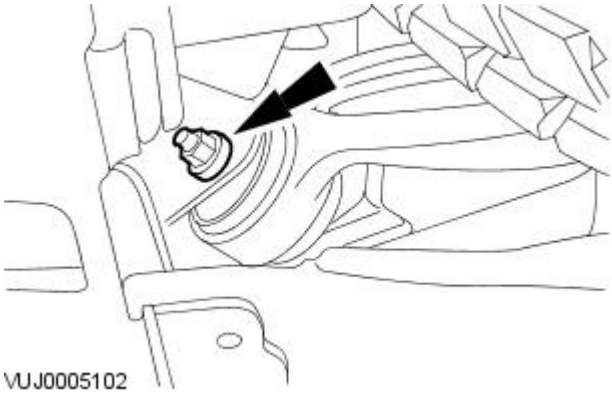


**14.** NOTE: Left-hand shown, right-hand similar.

Loosen the front lower arm retaining nut and bolt.

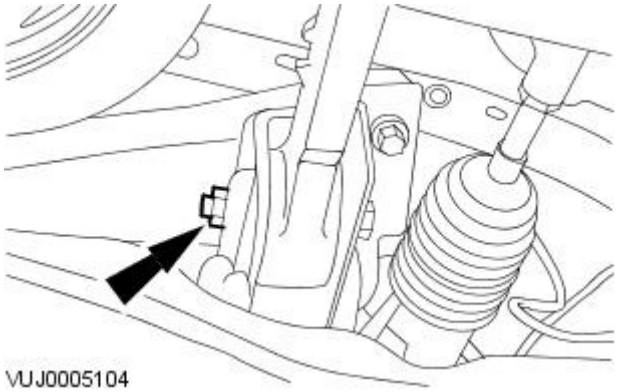


**15.** NOTE: Left-hand shown, right-hand similar.

Loosen the rear lower arm retaining nut and bolt.

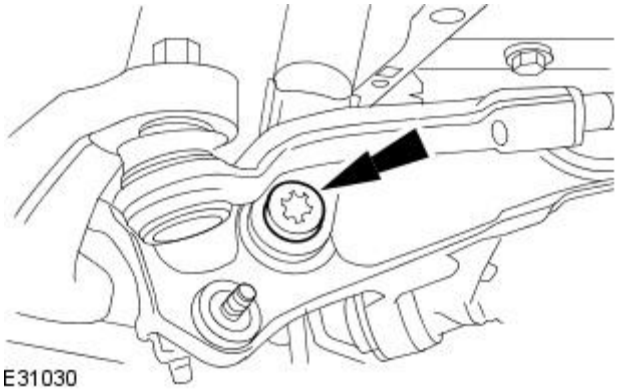


**16.** NOTE: Left-hand shown, right-hand similar.

Detach the front shock absorber and spring assembly.

GETtheMANUALS.org

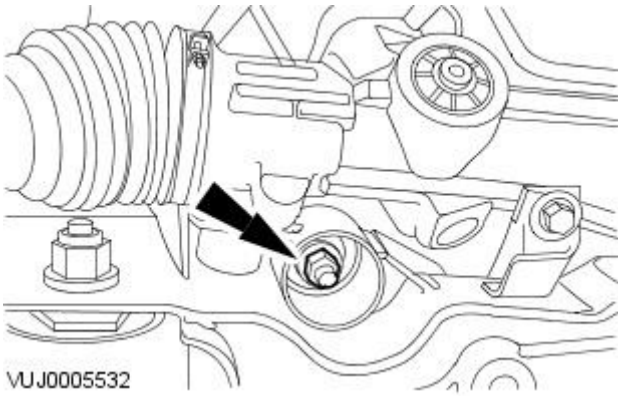


**17.** NOTE: Left-hand shown, right-hand similar.

Remove the engine mount retaining nut.

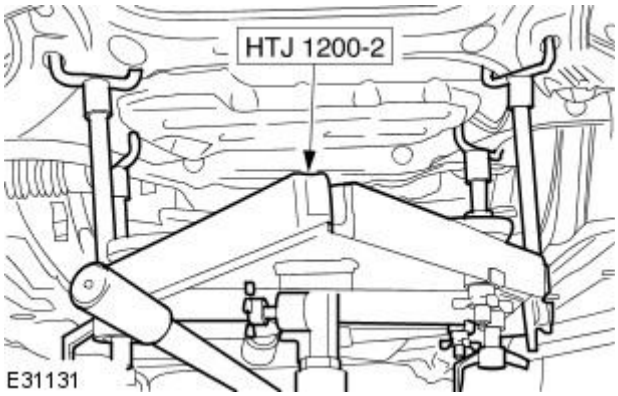


**18.** Install the special tool to the front subframe.

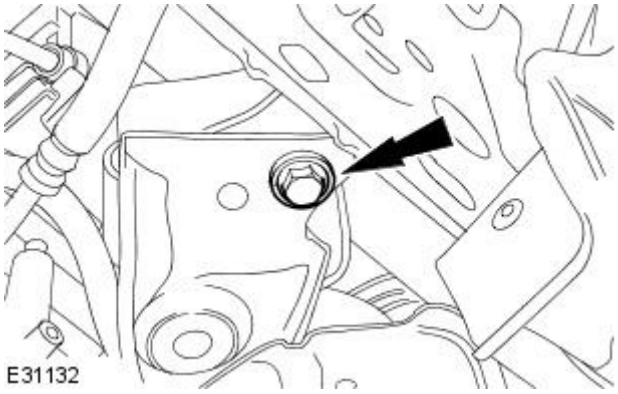


**19.** NOTE: Left-hand shown, right-hand similar.

Remove the front subframe front retaining bolt.

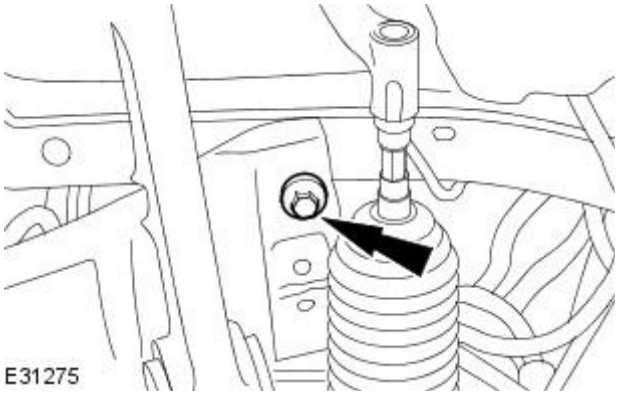


**20.** NOTE: Left-hand shown, right-hand similar.

Remove the front subframe rear retaining bolt.

**21.** CAUTION: When lowering the special tool care must be taken to manoeuvre the special tool so that the front subframe does not touch the air conditioning (A/C) pipes. Failure to follow this instruction may result in damage to the A/C pipes.

Lower the special tool by approximately 200 mm (7.9 in).

GETtheMANUALS.org

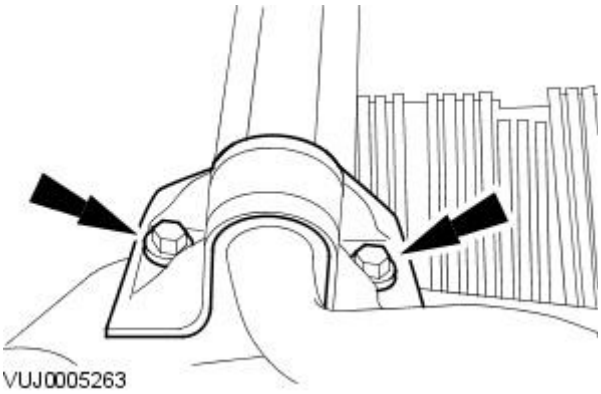


**22.** NOTE: Left-hand shown, right-hand similar.

Remove the stabilizer bar clamp.

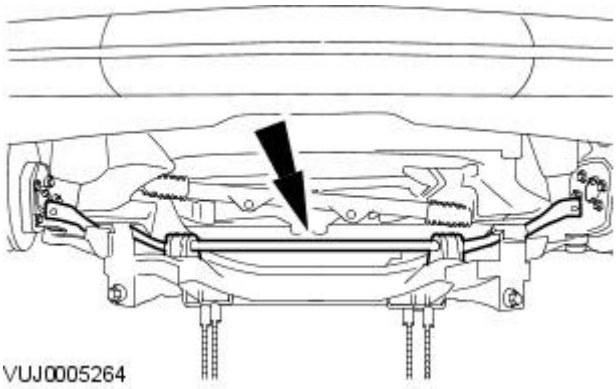


**23.** Remove the stabilizer bar.

## Installation

All vehicles

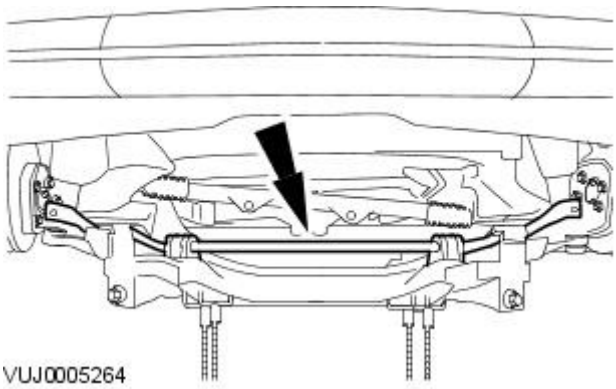


**1.** CAUTION: When raising the special tool care must be taken to manoeuvre the special tool so that the front subframe does not touch the air conditioning (A/C) pipes. Failure to follow this instruction may result in damage to the A/C pipes.

Install the stabilizer bar.

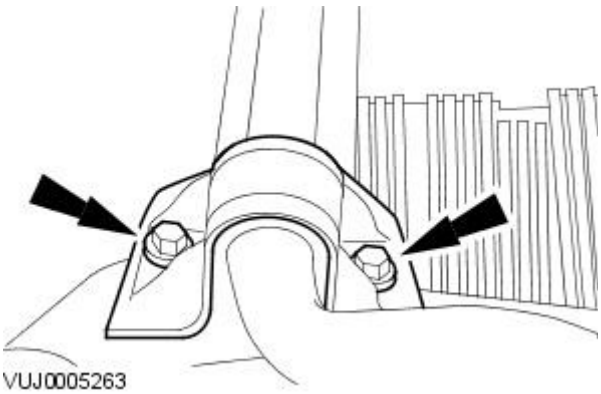


**2.** NOTE: Left-hand shown, right-hand similar.

Install the stabilizer bar clamp.

- Tighten to 55 Nm.

GETtheMANUALS.org

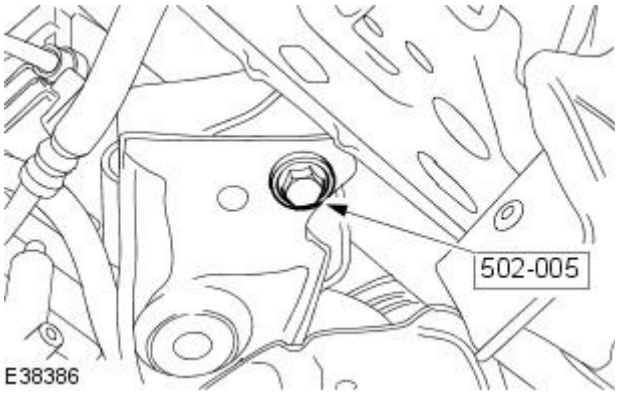


**3.** NOTE: Left-hand shown, right-hand similar.

Install the special tool.

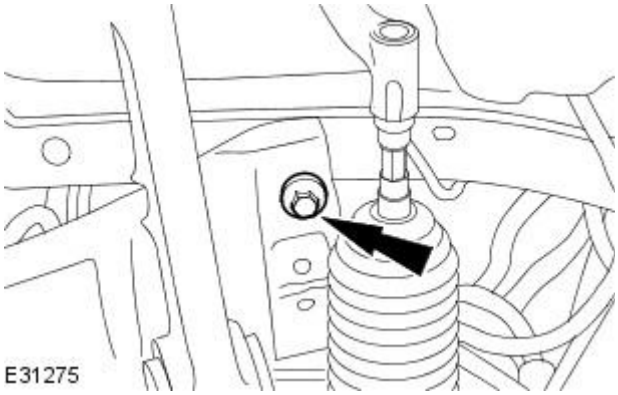


**4.** NOTE: Left-hand shown, right-hand similar.

Install the front subframe rear retaining bolt.

- Tighten to 80 Nm + 240°.

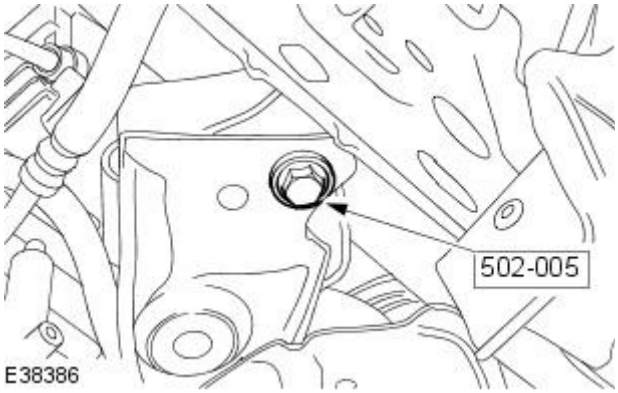


**5.** Remove the special tool.

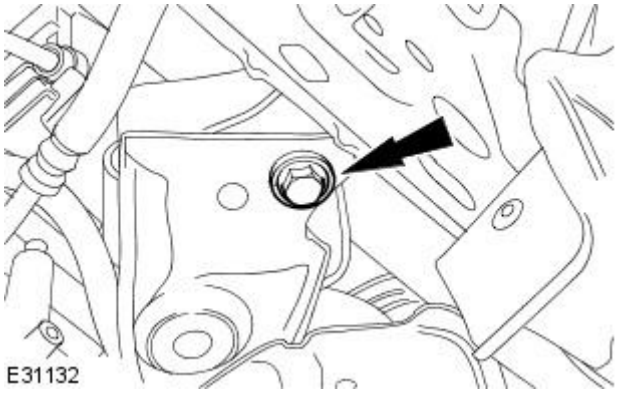


**6.** Install the front subframe front retaining bolt.

- Tighten to 150 Nm + 240°.

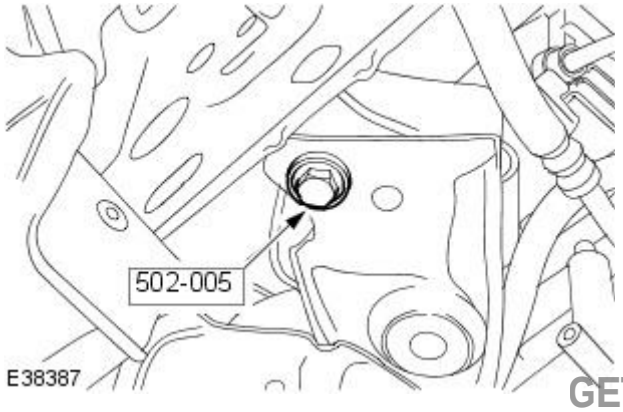


**7.** Remove the special tool.

GETtheMANUALS.org

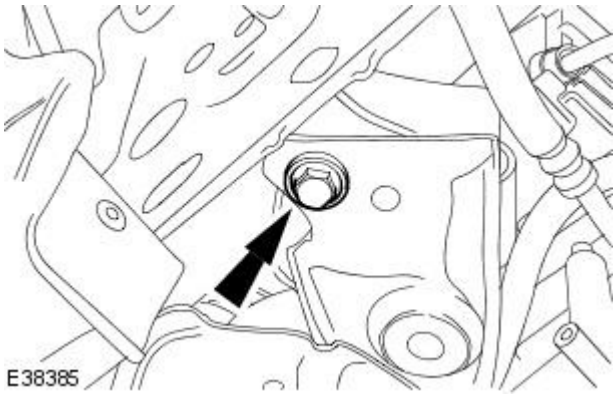


**8.** Install the front subframe front retaining bolt.

- Tighten to 150 Nm + 240°.

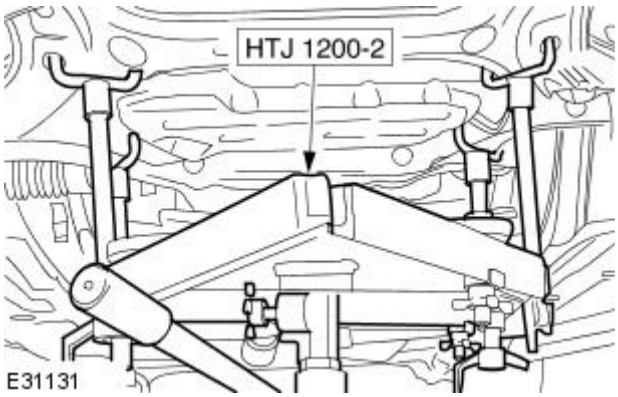


**9.** Remove the special tool.

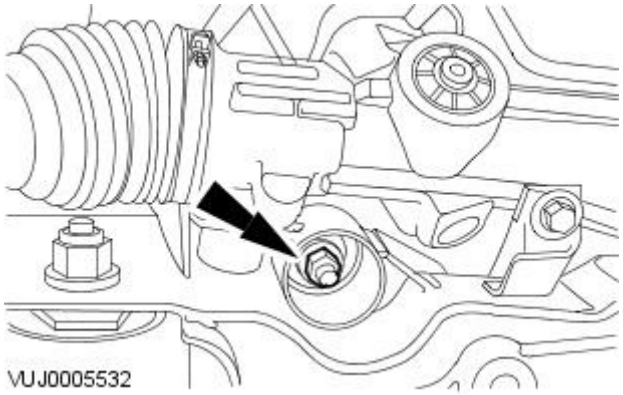


**10.** NOTE: Left-hand shown, right-hand similar.

Install the engine mount retaining nut.

- Tighten to 63 Nm.

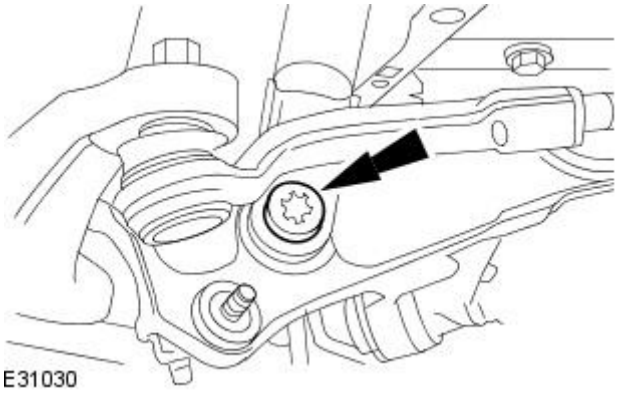


**11.** NOTE: Left-hand shown, right-hand similar.

Attach the front shock absorber and spring assembly.

- Tighten to 175 Nm.

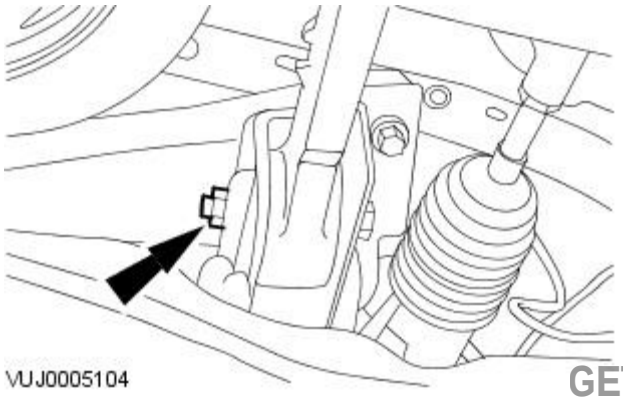


**12.** CAUTION: The final tightening of the rear lower arm inner retaining nut and bolt must be carried out with the vehicle on its wheels.

• NOTE: Left-hand shown, right-hand similar.

Hand tighten the rear lower arm retaining nut and bolt.

GETtheMANUALS.org

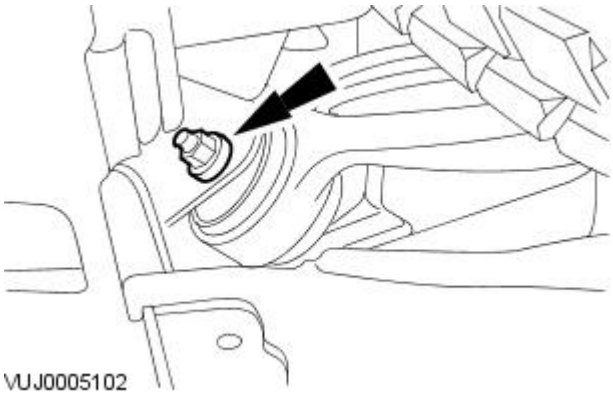


**13.** CAUTION: The final tightening of the front lower arm inner retaining nut and bolt must be carried out with the vehicle on its wheels.

• NOTE: Left-hand shown, right-hand similar.

Hand tighten the front lower arm retaining nut and bolt.

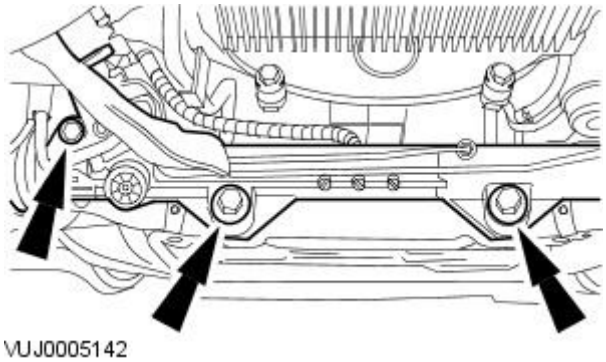


**14.** Install the steering gear.

- Tighten to 100 Nm.

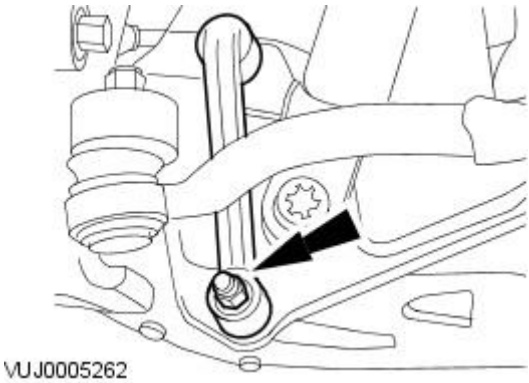


**15.** Install the stabilizer bar link.

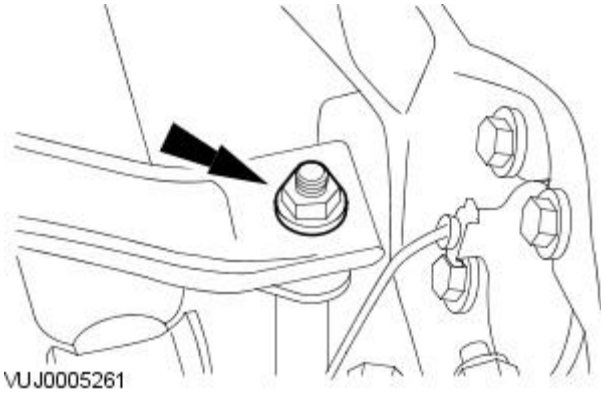


**16.** Attach the stabilizer bar link and install the stabilizer bar link retaining nut.

- Tighten to 43 Nm.

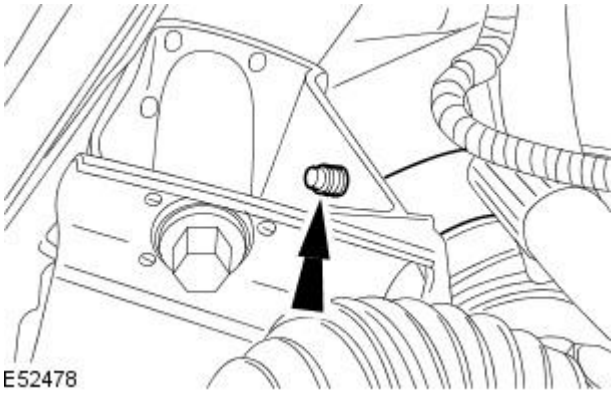


**17.** Attach the power steering hose retaining clip to the front subframe.

GETtheMANUALS.org

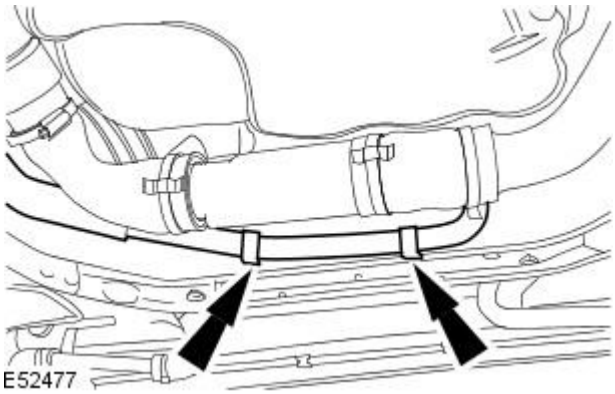


**18.** Attach the engine coolant inlet pipe to the front subframe.

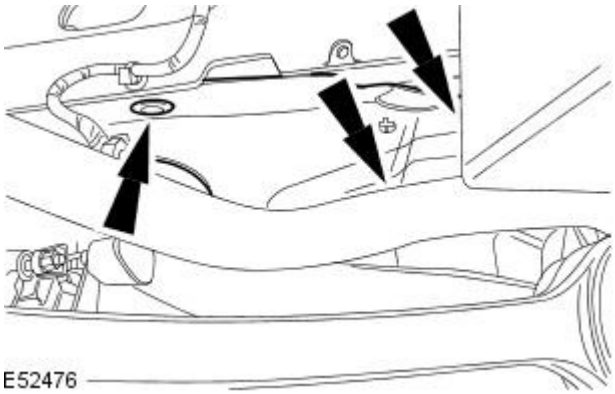


**19.** Install the right-hand splash shield.

Vehicles with automatic transmission

**20.** Install the transmission fluid cooler.
For additional information, refer to: Transmission Fluid Cooler (307-02 Transmission/Transaxle Cooling, Removal and Installation).

All vehicles

**21.** Install both the front wheel and tires.
For additional information, refer to: Wheel and Tire (204-04 Wheels and Tires, Removal and Installation).

**22.** Install the radiator splash shield.
For additional information, refer to: Radiator Splash Shield (501-02 Front End Body Panels, Removal and Installation).

**23.** Install the air deflector.
For additional information, refer to: Air Deflector (501-02 Front End Body Panels, Removal and Installation).

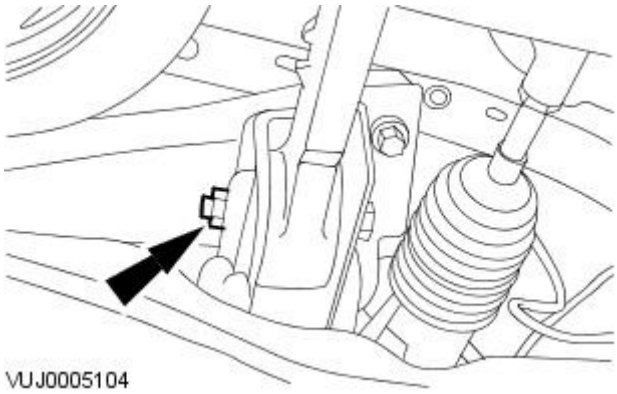


**24.** CAUTION: The final tightening of the rear lower arm inner retaining nut and bolt must be carried out with the vehicle on its wheels.

• NOTE: Left-hand shown, right-hand similar.

Tighten to 175 Nm.

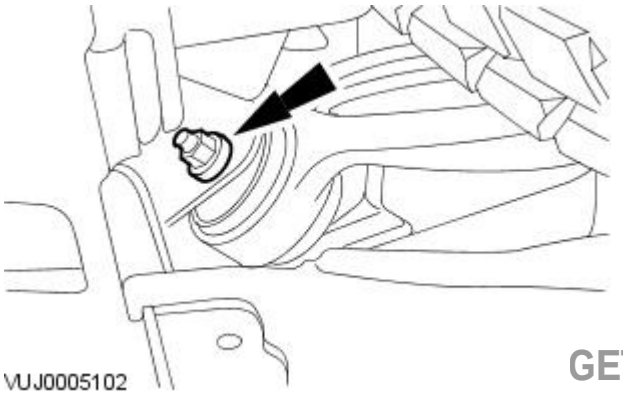


**25.** CAUTION: The final tightening of the front lower arm inner retaining nut and bolt must be carried out with the vehicle on its wheels.

• NOTE: Left-hand shown, right-hand similar.

Tighten to 175 Nm.

GETtheMANUALS.org

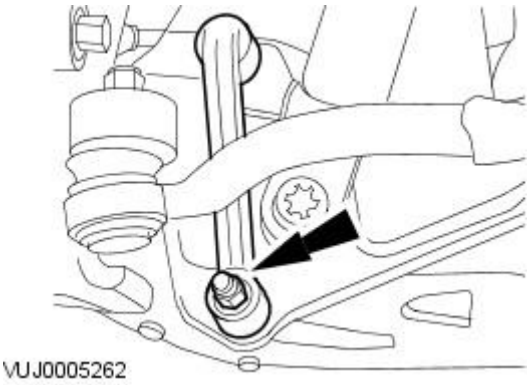


**26.** NOTE: Left-hand shown, right-hand similar.

Tighten to 70 Nm.

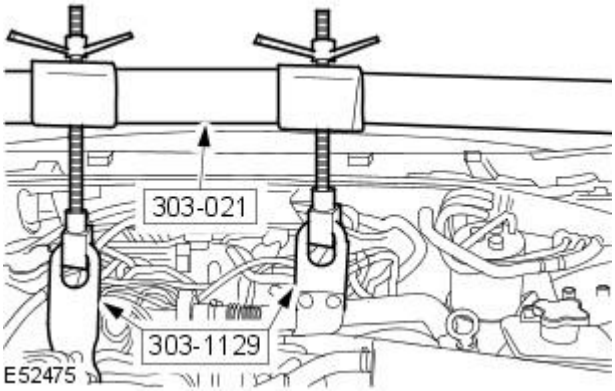


**27.** Remove the special tool.

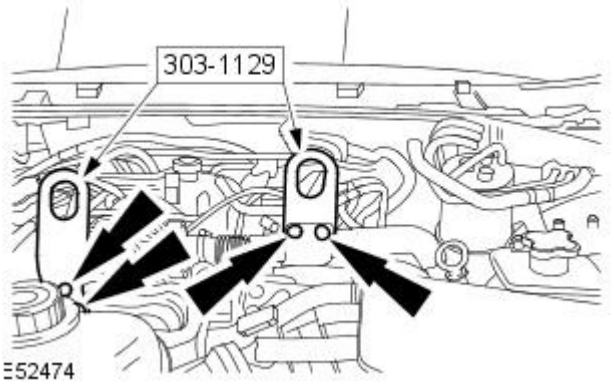


**28.** Remove the special tool.

**29.** Install the intake air shutoff throttle.
For additional information, refer to: Intake Air Shutoff Throttle (303-04C Fuel Charging and Controls - 2.7L V6 - TdV6, Removal and Installation).

GETtheMANUALS.org

# Front Suspension - Front Stabilizer BarV8 4.2L Petrol/V8 S/C 4.2L Petrol

Removal and Installation

| Special Tool(s) | |
|---|---|
| 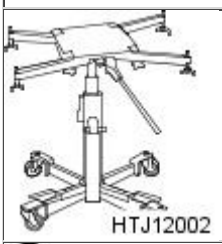  | Powertrain Assembly Jack<br><br>HTJ1200-02 |
| 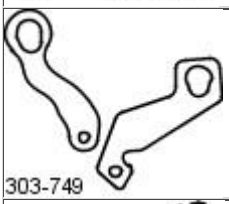  | Engine Lifting Brackets<br><br>303-749 |
| 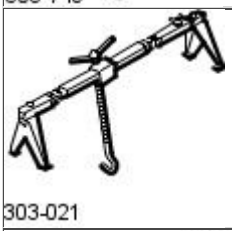  | Engine Support Bracket<br><br>303-021 |
| | Subframe Alignment Bolt<br><br>502-005 |

## Removal

Vehicles without supercharger

1. Remove the throttle body. For additional information, refer to: (303-04B Fuel Charging and Controls - V8 4.2L Petrol/V8 S/C 4.2L Petrol)

   Throttle Body - Vehicles Without: Supercharger, VIN Range: M45255->N52047 (Removal and Installation),
   Throttle Body - Vehicles Without: Supercharger, VIN Range: N52048->N99999 (Removal and Installation).

Vehicles with supercharger

2. Remove the air cleaner outlet pipe.
   For additional information, refer to: Air Cleaner Outlet Pipe (303-12B Intake Air Distribution and Filtering - V8 4.2L Petrol/V8 S/C 4.2L Petrol, Removal and Installation).

All vehicles

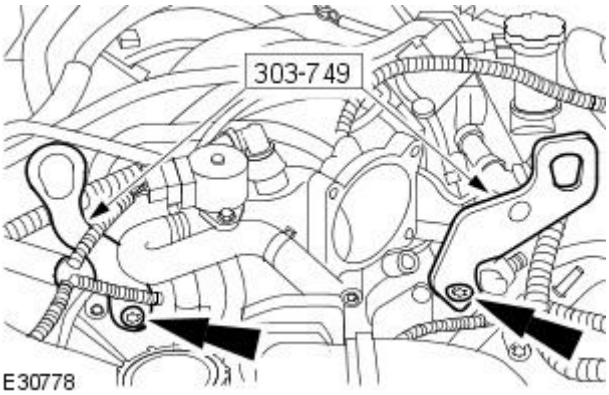


3. NOTE: Vehicles without supercharger shown, vehicles with supercharger similar.

   Install the special tools.

GETtheMANUALS.org

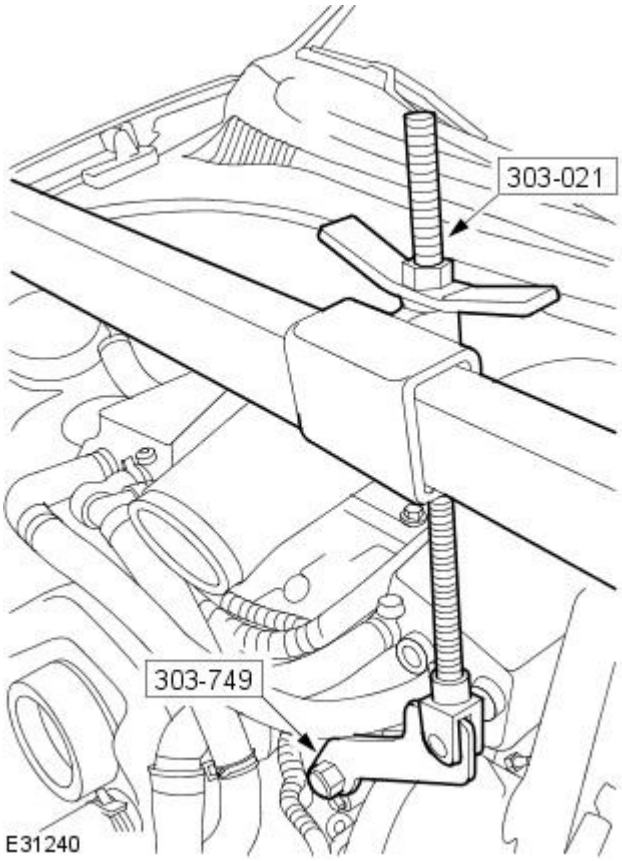


**4.** NOTE: Vehicles with supercharger shown, vehicles without supercharger similar.

• NOTE: Right-hand shown, left-hand similar.

Install the special tool.

**5.** Remove the air deflector.
For additional information, refer to: Air Deflector (501-02 Front End Body Panels, Removal and Installation).

**6.** Remove the radiator splash shield.
For additional information, refer to: Radiator Splash Shield (501-02 Front End Body Panels, Removal and Installation).

**7.** Remove both the front wheels and tires.
For additional information, refer to: Wheel and Tire (204-04 Wheels and Tires, Removal and Installation).

**8.** NOTE: Left-hand shown, right-hand similar.

Remove the stabilizer bar link retaining nut.

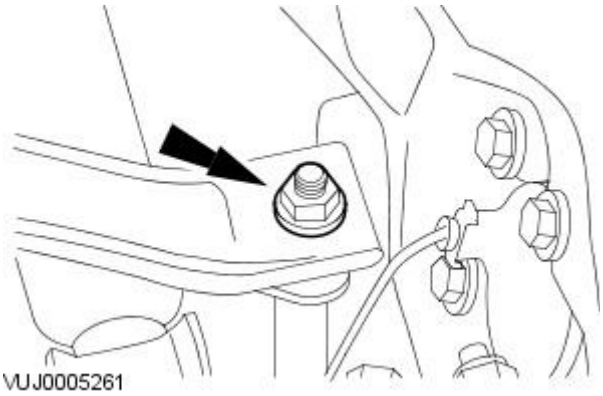


**9.** NOTE: Left-hand shown, right-hand similar.

Remove the stabilizer bar link.

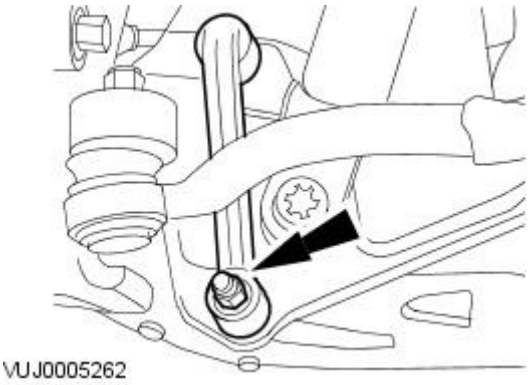


GETtheMANUALS.org

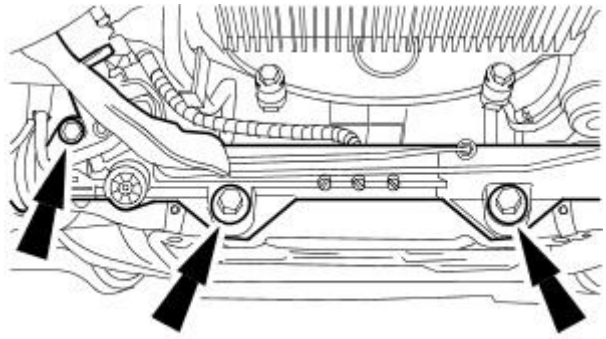


**10.** Detach the steering gear.

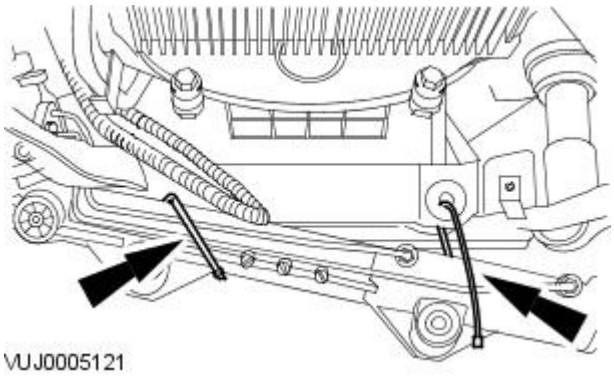


**11.** Secure the steering gear.

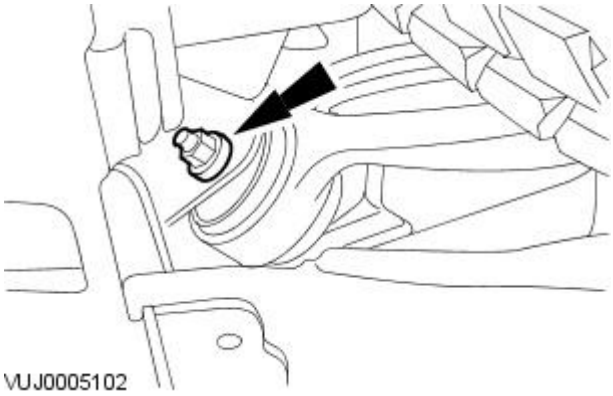


**12.** NOTE: Left-hand shown, right-hand similar.

Loosen the front lower arm retaining nut and bolt.

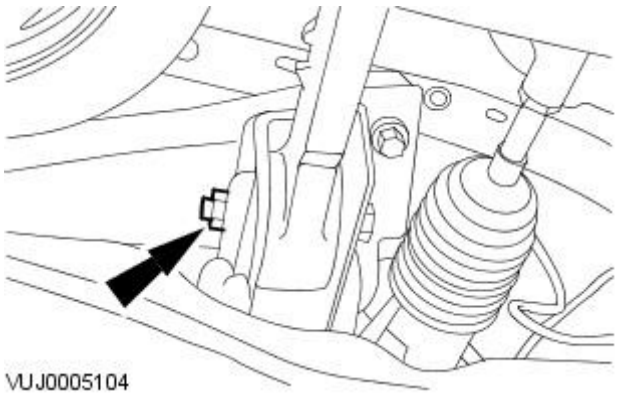


**13.** NOTE: Left-hand shown, right-hand similar.

Loosen the rear lower arm retaining nut and bolt.

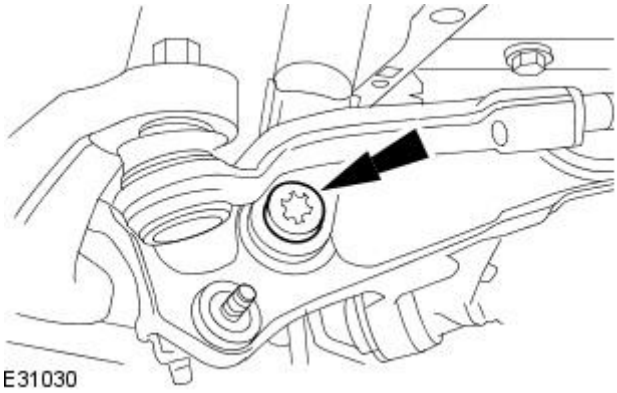


**14.** NOTE: Left-hand shown, right-hand similar.

Detach the shock absorber and spring assembly.

GETtheMANUALS.org

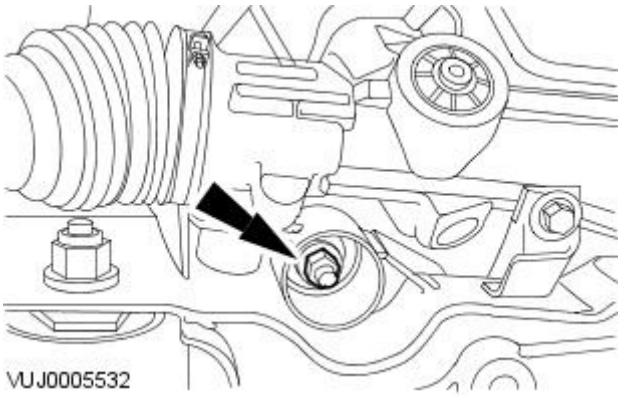


**15.** NOTE: Left-hand shown, right-hand similar.

Detach the engine mount.

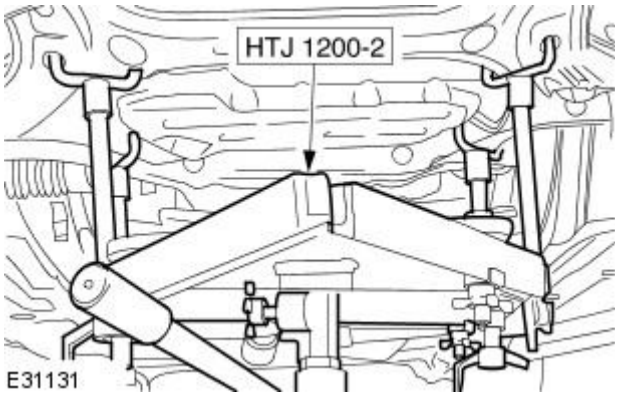


**16.** Install the special tool.

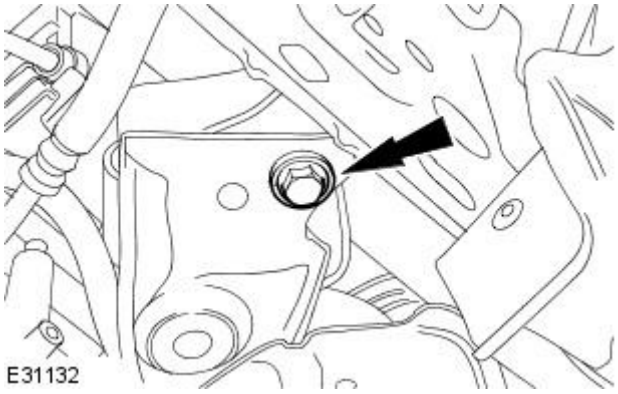


**17.** NOTE: Left-hand shown, right-hand similar.

Remove the front subframe front retaining bolt.

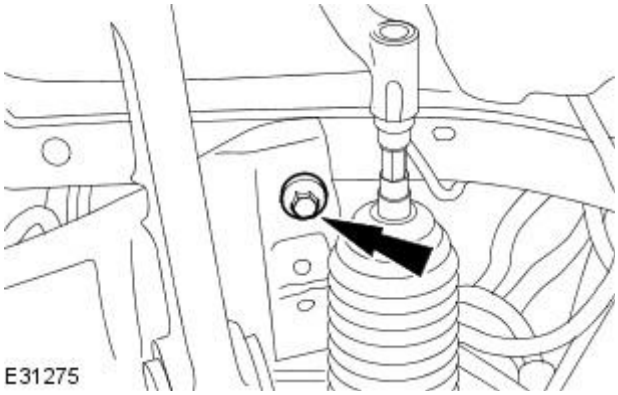


**18.** NOTE: Left-hand shown, right-hand similar.

Remove the front subframe rear retaining bolt.

**19.** Lower the special tool by approximately 200 mm (7.9 in).

**20.** NOTE: Left-hand shown, right-hand similar.

Remove the stabilizer bar clamp.

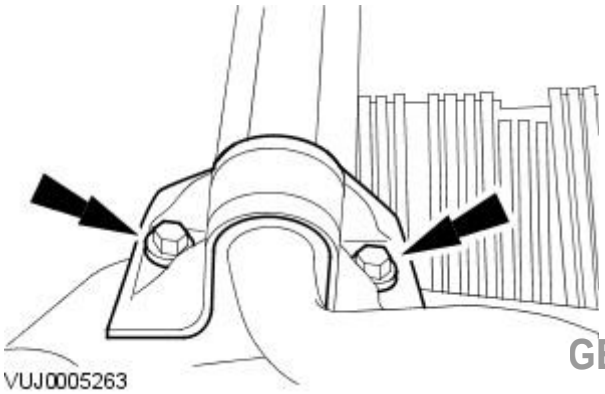


GETtheMANUALS.org

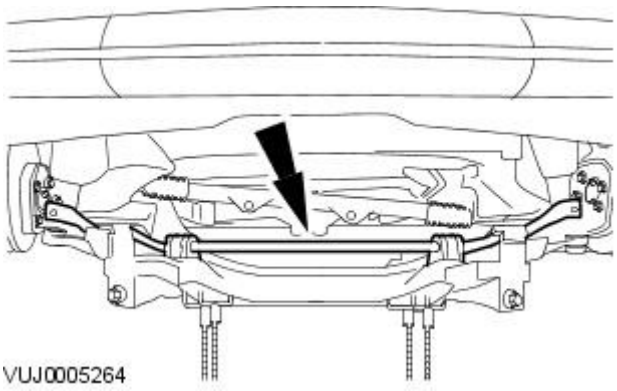


**21.** Remove the stabilizer bar.

## Installation

All vehicles

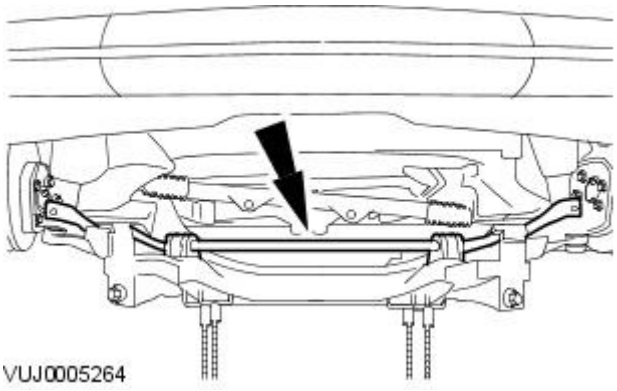


**1.** Install the stabilizer bar.

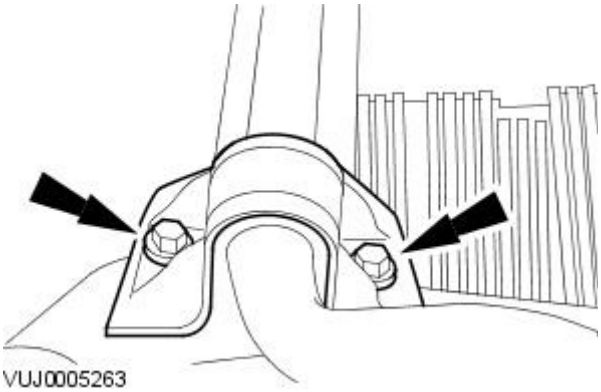


**2.** NOTE: Left-hand shown, right-hand similar.

Install the stabilizer bar clamp.

- Tighten to 55 Nm.

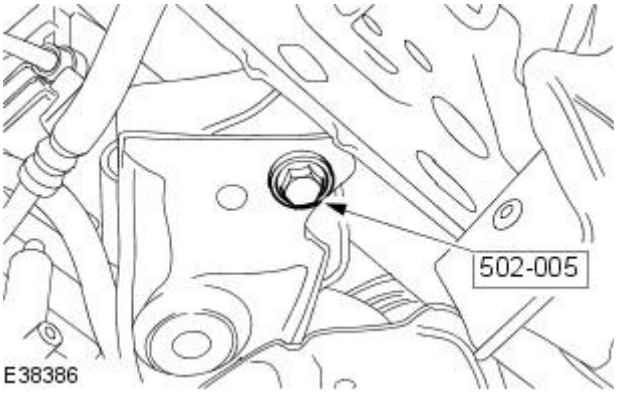


**3.** NOTE: Left-hand shown, right-hand similar.

Install the special tools.

GETtheMANUALS.org

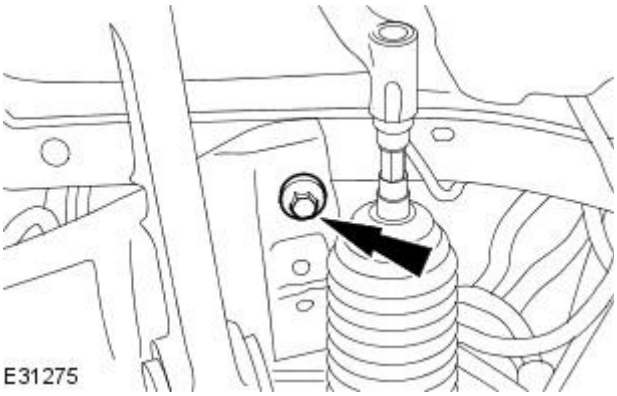


**4.** NOTE: Left-hand shown, right-hand similar.

Install the front subframe rear retaining bolts.

- Tighten to 80 Nm + 240°.

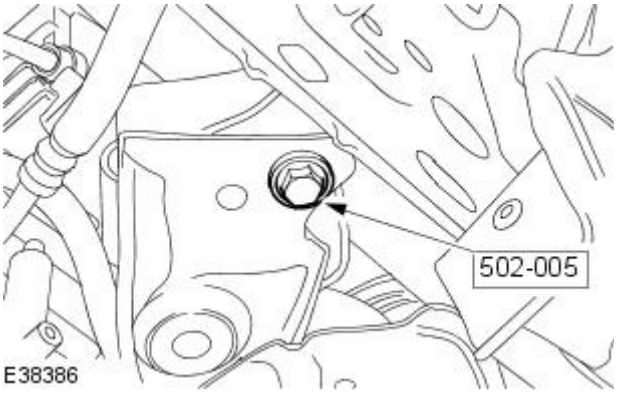


**5.** Remove the special tool.

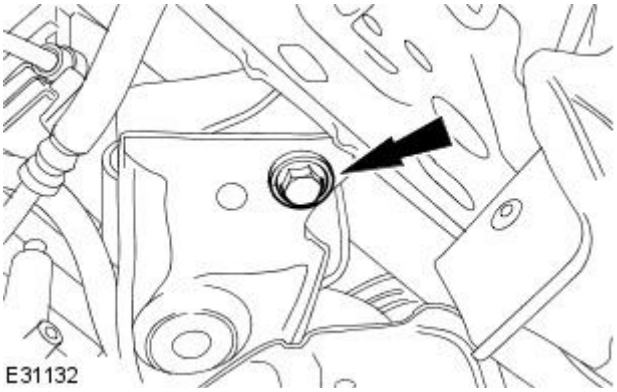


**6.** Install the front subframe front retaining bolt.

- Tighten to 150 Nm + 240°.

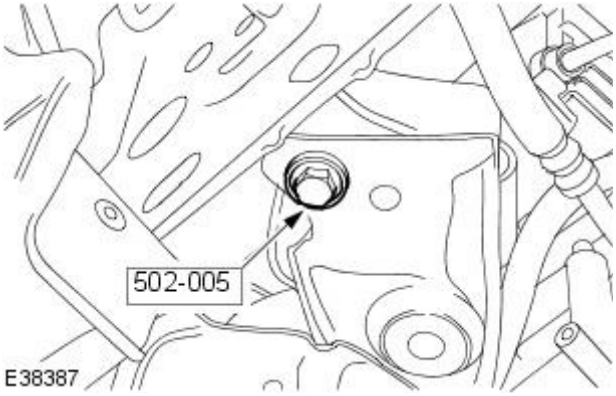


**7.** Remove the special tool.

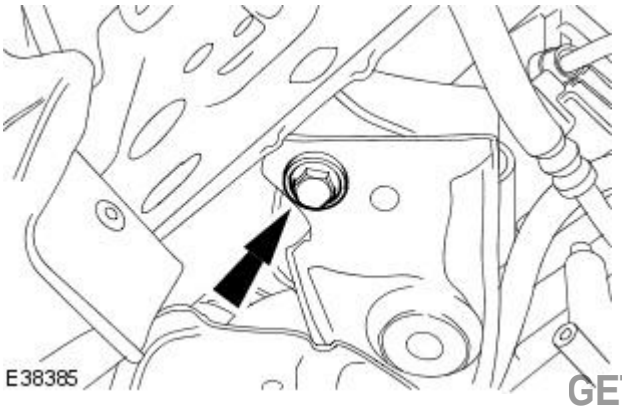


**8.** Install the front subframe front retaining bolt.

- Tighten to 150 Nm + 240°.

GETtheMANUALS.org

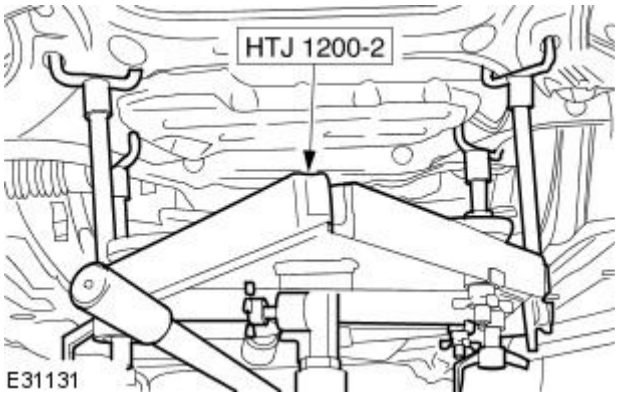


**9.** Remove the special tool.

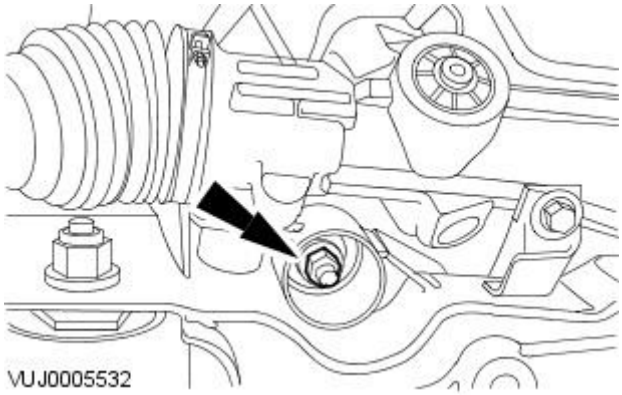


**10.** NOTE: Left-hand shown, right-hand similar.

Attach the engine mount.

- Tighten to 63 Nm.

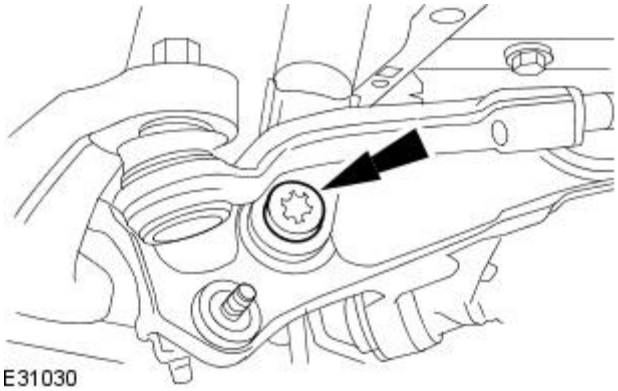


**11.** NOTE: Left-hand shown, right-hand similar.

Attach the shock absorber and spring assembly.

- Tighten to 175 Nm.

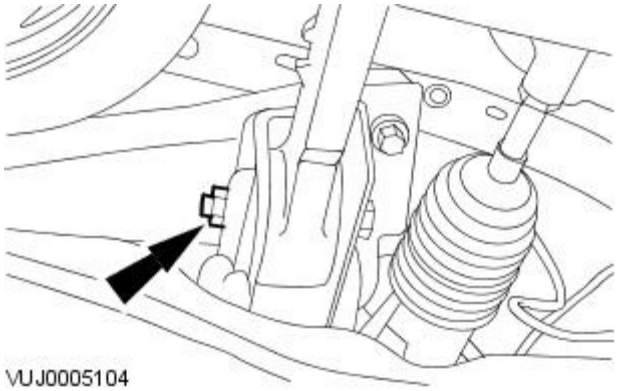


**12.** NOTE: Left-hand shown, right-hand similar.

Tighten the rear lower arm retaining nut and bolt.

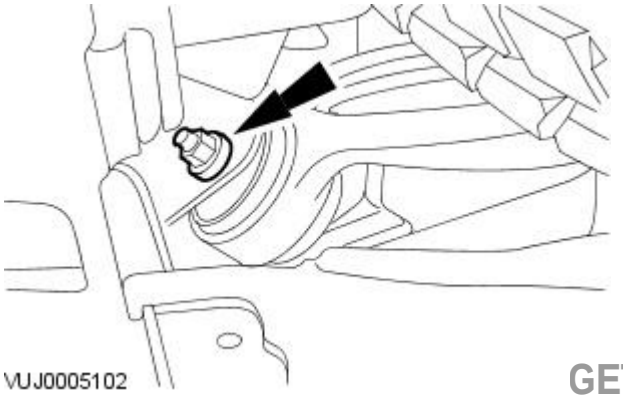


**13.** NOTE: Left-hand shown, right-hand similar.

Tighten the front lower arm retaining nut and bolt.

GETtheMANUALS.org

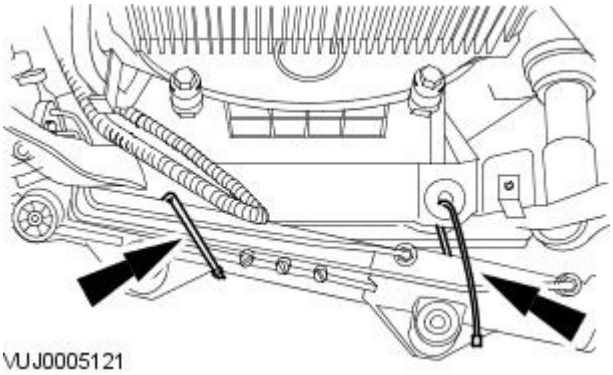


**14.** Detach the steering gear.

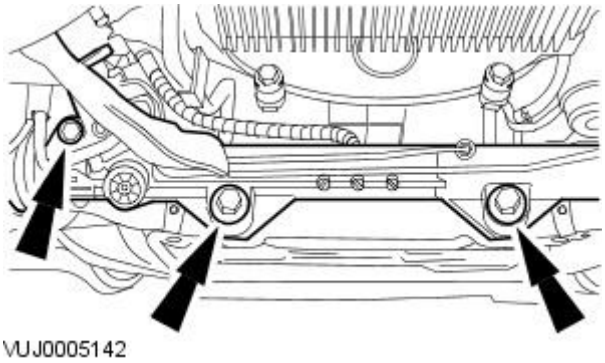


**15.** Attach the steering gear.

- Tighten to 100 Nm.

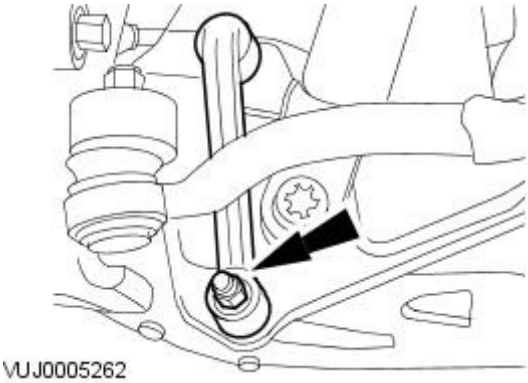


**16.** NOTE: Left-hand shown, right-hand similar.

Install the stabilizer bar link.

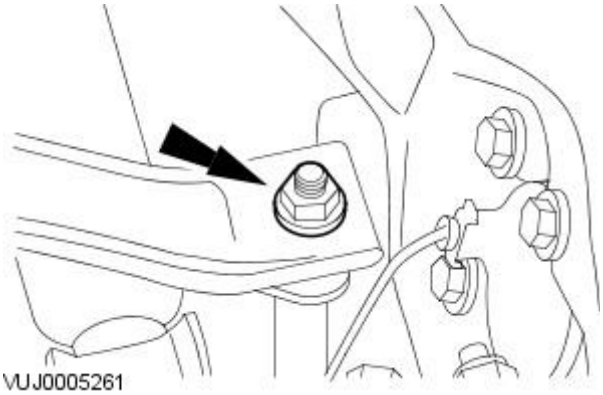


**17.** NOTE: Left-hand shown, right-hand similar.

Attach the stabilizer bar link.

- Tighten to 47 Nm.

**18.** Install both the front wheels and tires.
For additional information, refer to: Wheel and Tire (204-04 Wheels and Tires, Removal and Installation).

**19.** Install the radiator splash shield.
For additional information, refer to: Radiator Splash Shield (501-02 Front End Body Panels, Removal and Installation).

**20.** Install the air deflector.
For additional information, refer to: Air Deflector (501-02 Front End Body Panels, Removal and Installation).

GETtheMANUALS.org

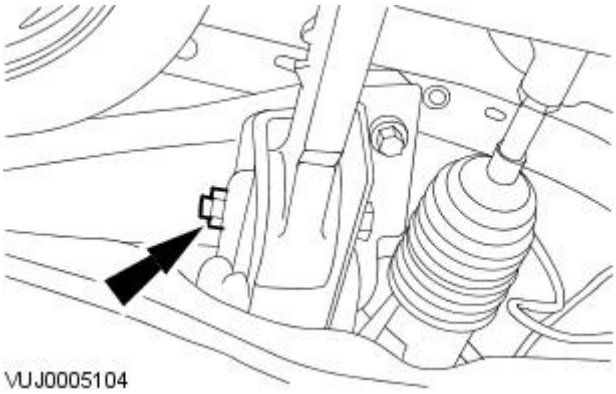


**21.** CAUTION: The final tightening of the rear lower arm inner retaining nut and bolt must be carried out with the vehicle on its wheels.

• NOTE: Left-hand shown, right-hand similar.

Tighten to 175 Nm.

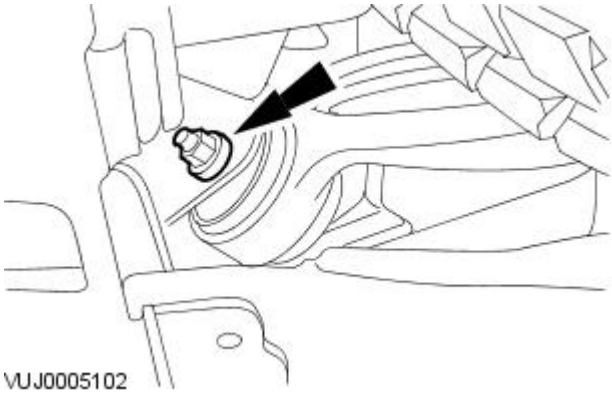


**22.** CAUTION: The final tightening of the rear lower arm inner retaining nut and bolt must be carried out with the vehicle on its wheels.

• NOTE: Left-hand shown, right-hand similar.

Tighten to 175 Nm.

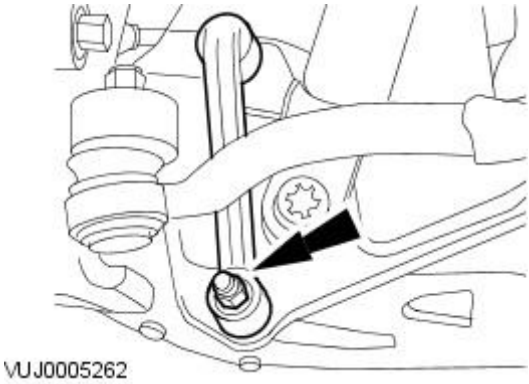


**23.** NOTE: Left-hand shown, right-hand similar.

Tighten to 70 Nm.

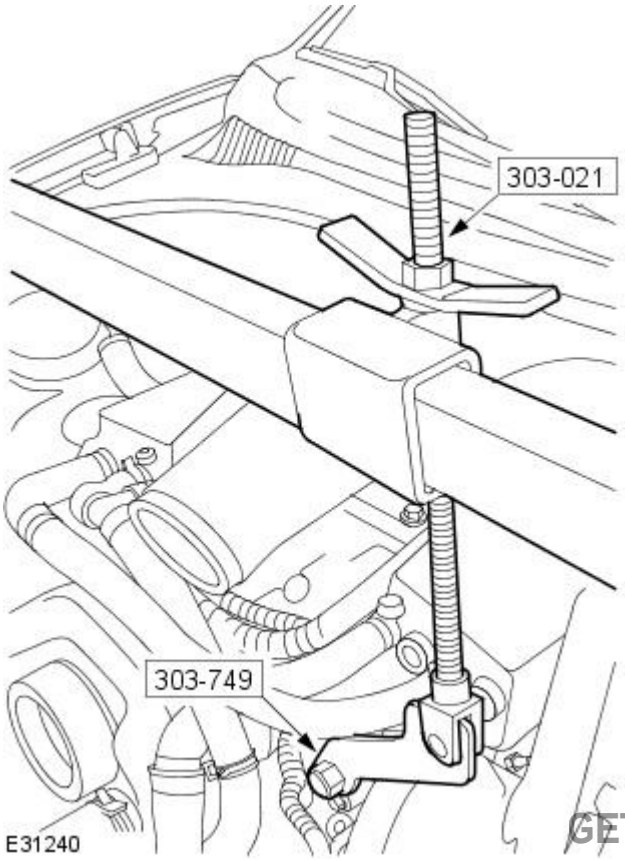


**24.** NOTE: Vehicles with supercharger shown, vehicles without supercharger similar.

• NOTE: Right-hand shown, left-hand similar.

Remove the special tool.

- Loosen the special tool adjustment bolts.

GETtheMANUALS.org

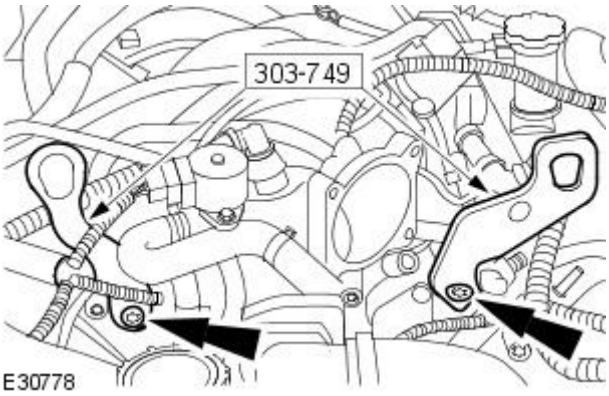


**25.** NOTE: Vehicles without supercharger shown, vehicles with supercharger similar.

Remove the special tools.

Vehicles with supercharger

**26.** Install the air cleaner outlet pipe.
For additional information, refer to: Air Cleaner Outlet Pipe (303-12B Intake Air Distribution and Filtering - V8 4.2L Petrol/V8 S/C 4.2L Petrol, Removal and Installation).

Vehicles without supercharger

**27.** Install the throttle body. For additional information, refer to: (303-04B Fuel Charging and Controls - V8 4.2L Petrol/V8 S/C 4.2L Petrol)

Throttle Body - Vehicles Without: Supercharger, VIN Range: M45255->N52047 (Removal and Installation),
Throttle Body - Vehicles Without: Supercharger, VIN Range: N52048->N99999 (Removal and Installation).

GETtheMANUALS.org

# Front Suspension - Front Stabilizer Bar Link

Removal and Installation

## Removal

1. Raise and support the vehicle.
   For additional information, refer to Section 100-02 Jacking and Lifting.
2. Remove the stabilizer bar link retaining nut.

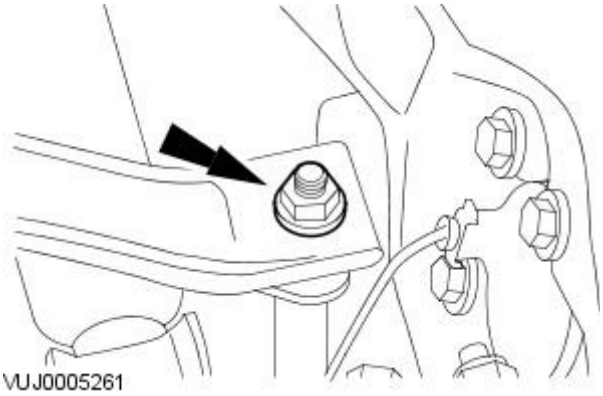


3. Remove the stabilizer bar link.

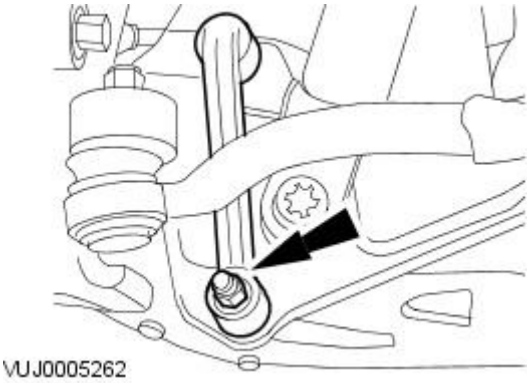


## Installation

1. Install the stabilizer bar link.

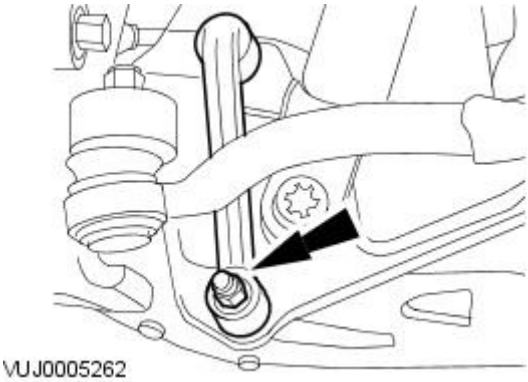


2. Tighten to 47 Nm.

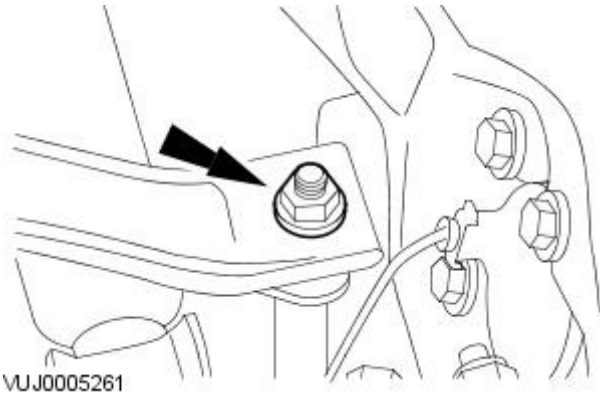


3. Lower the vehicle.

GETtheMANUALS.org

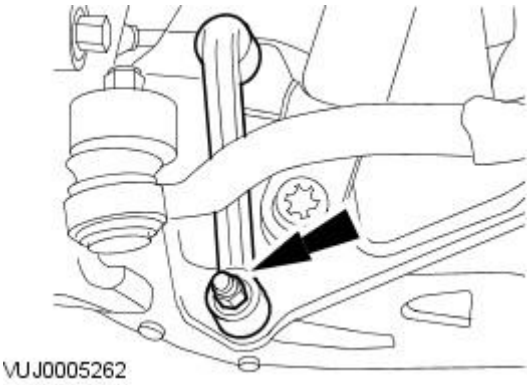


**4.** Tighten to 70 Nm.

GETtheMANUALS.org

# Front Suspension - Stabilizer Bar Link Bushing

Removal and Installation

| Special Tool(s) | |
|---|---|
| 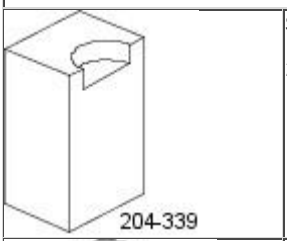  | Stabilizer Bar Link Bushing Installer<br><br>204-339 |
| 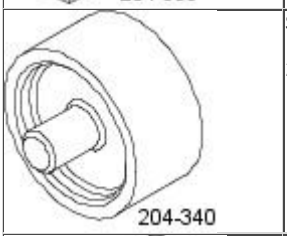  | Stabilizer Bar Link Bushing Installer<br><br>204-340 |
| 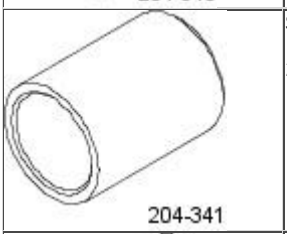  | Stabilizer Bar Link Bushing Remove<br><br>204-341 |
| 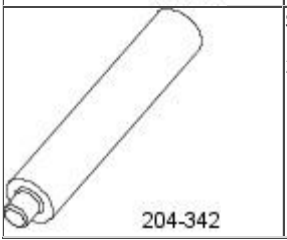  | Stabilizer Bar Link Bushing Remove<br><br>204-342 |

## Removal

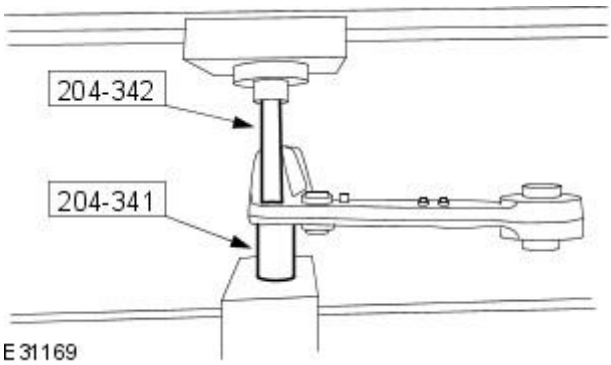


1. Remove the rear lower arm.
   For additional information, refer to Rear Lower Arm in this section.
2. Using the special tools remove the stabilizer bar link bushing.

## Installation

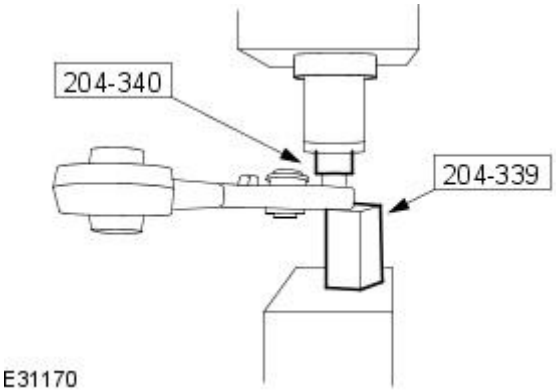


1. NOTE: Apply water to lubricate the bushing.

   Using the special tools install the stabilizer bar link bushing.
2. Install the rear lower arm.
   For additional information, refer to Rear Lower Arm in this section.

GETtheMANUALS.org

# Front Suspension - Upper Arm LH

Removal and Installation

## Removal

1. Remove the shock absorber and spring assembly.
   For additional information, refer to Shock Absorber and Spring Assembly in this section.
2. Remove the cowl vent screen.
   For additional information, refer to Section 501-02 Front End Body Panels.
3. Disconnect the electrical connector.

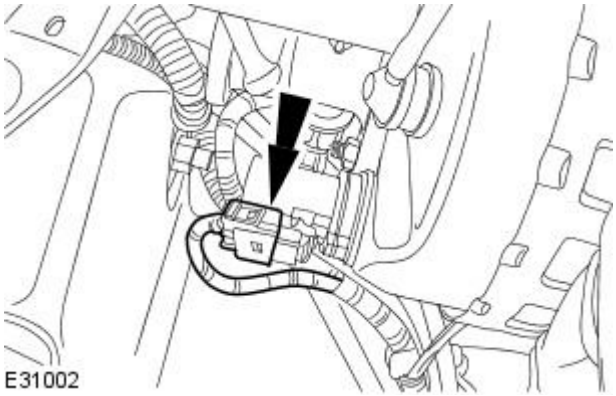


4. Remove the brake pedal travel sensor.
   1. Remove the brake pedal travel sensor retaining clip.
   2. Remove the brake pedal travel sensor.

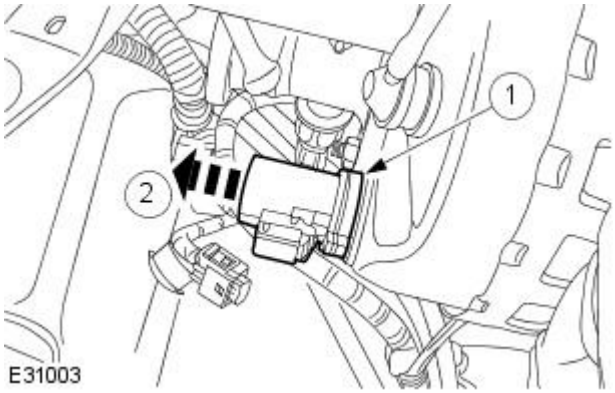


5. Remove the upper arm retaining nut.

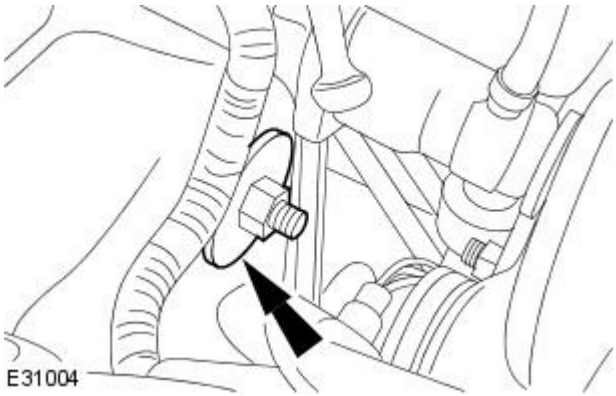


6. Remove the air cleaner assembly. For additional information, refer to Section 303-12A Intake Air Distribution and FilteringSection 303-12B Intake Air Distribution and FilteringSection 303-12C Intake Air Distribution and FilteringorSection 303-12A Intake Air Distribution and FilteringSection 303-12B Intake Air Distribution and FilteringSection 303-12C Intake Air Distribution and Filtering
7. Remove the upper arm retaining nut.

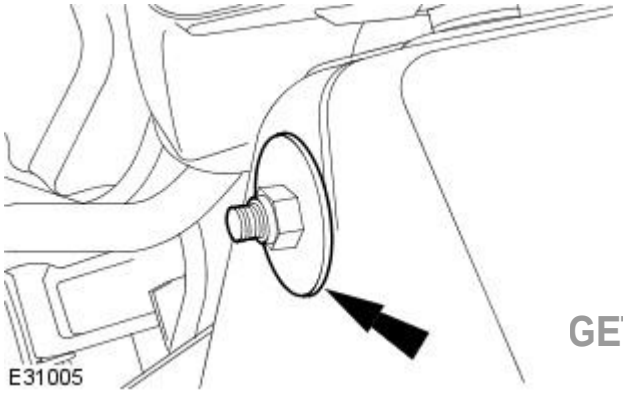


GETtheMANUALS.org

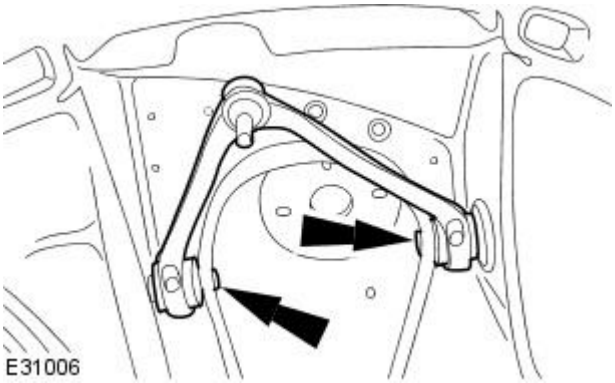


**8.** Remove the upper arm.

## Installation

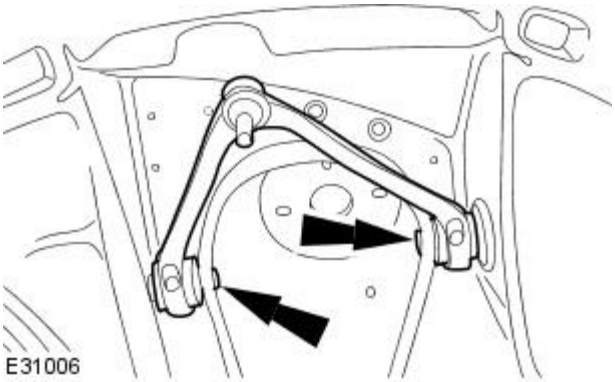


**1.** Install the upper arm.

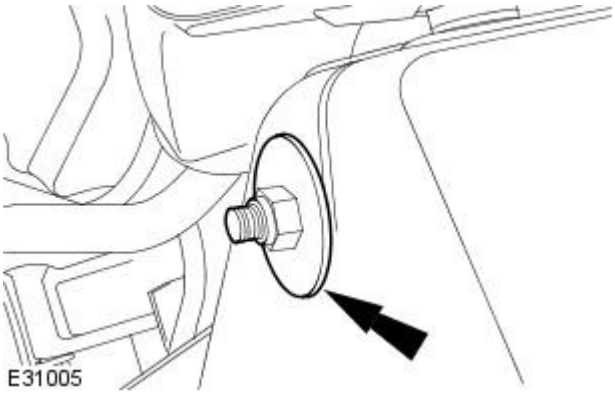


**2.** Install the upper arm retaining nut.

- Tighten to 47 Nm.

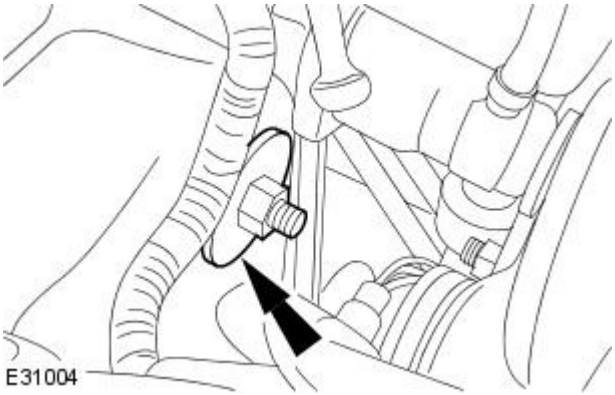


**3.** Install the upper arm retaining nut.

**4.** Install the shock absorber and spring assembly.
For additional information, refer to Shock Absorber and Spring Assembly in this section.

GETtheMANUALS.org

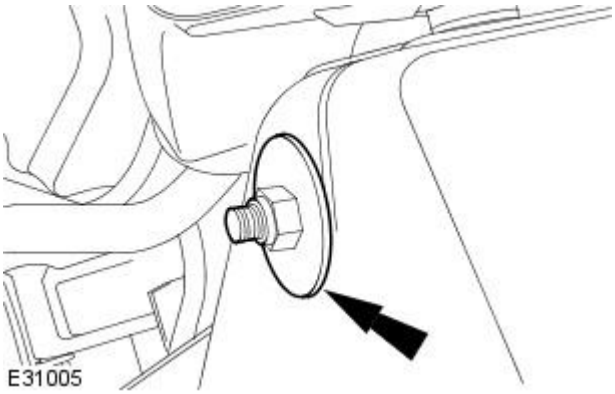


**5.** CAUTION: The final tightening of the Upper arm retaining nut must be carried out with the vehicle on its wheels.

Tighten to 47 Nm.

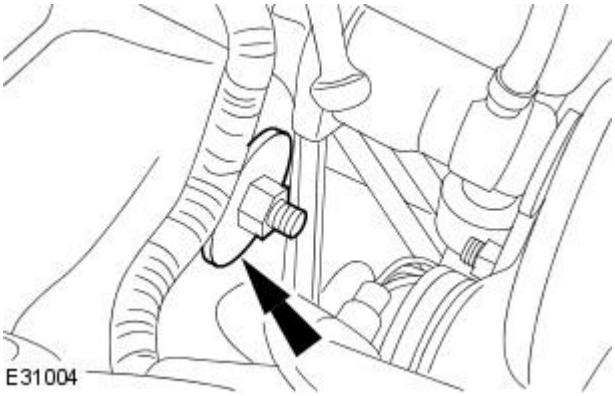


**6.** CAUTION: The final tightening of the Upper arm retaining nut must be carried out with the vehicle on its wheels.

Tighten to 47 Nm.

**7.** Install the air cleaner assembly. For additional information, refer to Section 303-12A Intake Air Distribution and FilteringSection 303-12B Intake Air Distribution and FilteringSection 303-12C Intake Air Distribution and FilteringorSection 303-12A Intake Air Distribution and FilteringSection 303-12B Intake Air Distribution and FilteringSection 303-12C Intake Air Distribution and Filtering

**8.** Install the brake pedal travel sensor.

1. Install the brake pedal travel sensor retaining clip.
2. Install the brake pedal travel sensor retaining clip.

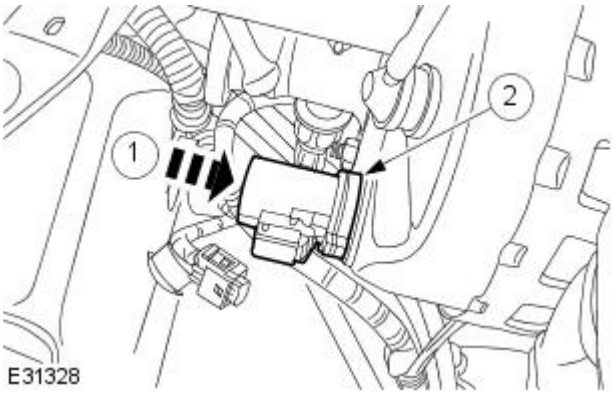


**9.** Connect the electrical connector.

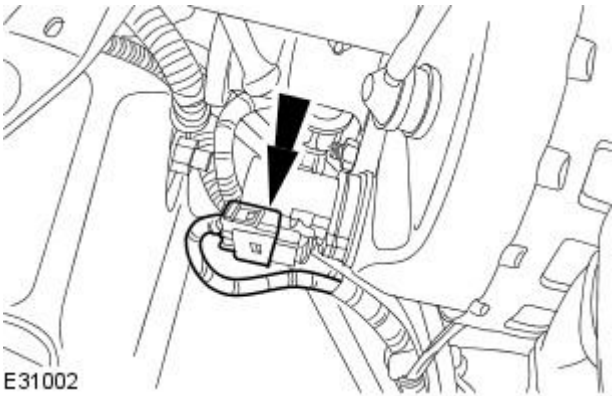


**10.** Install the cowl vent screen.
For additional information, refer to Section 501-02 Front End Body Panels.

GETtheMANUALS.org

# Front Suspension - Upper Arm RH

Removal and Installation

## Removal

1. Remove the shock absorber and spring assembly.
   For additional information, refer to Shock Absorber and Spring Assembly in this section.
2. Remove the cabin air filter.
   For additional information, refer to Section 412-01 Air Distribution and Filtering.
3. Remove the cabin air filter housing retaining nut.

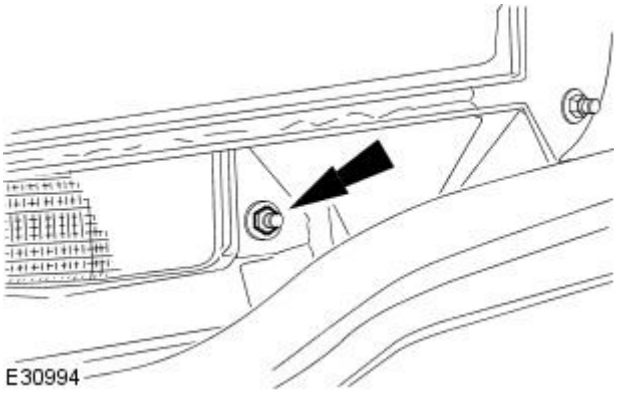


4. Remove the cabin air filter housing.

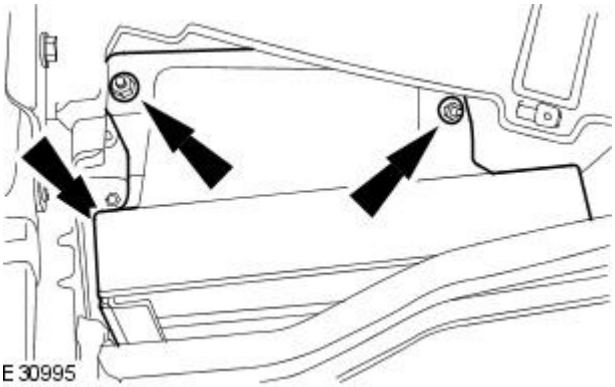


5. Remove the engine compartment support.

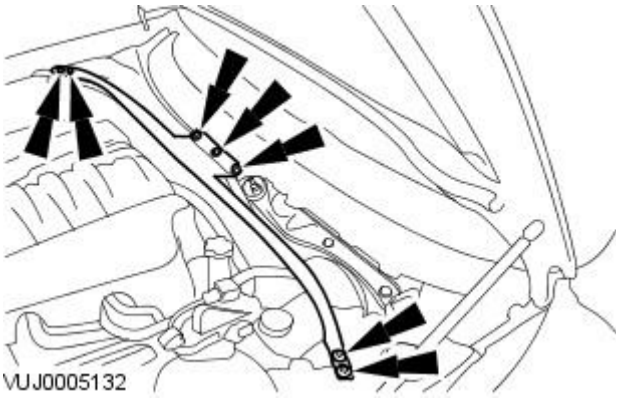


6. Remove the engine compartment panel.

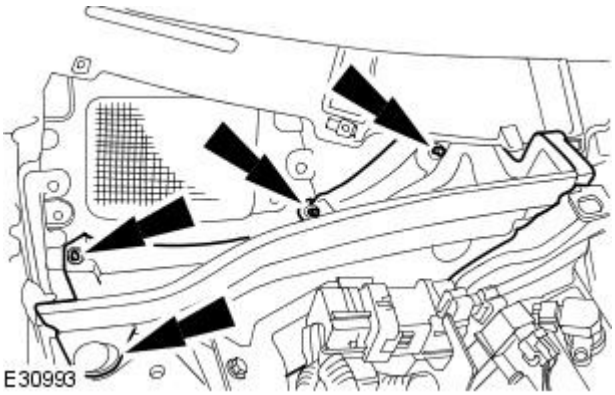


GETtheMANUALS.org

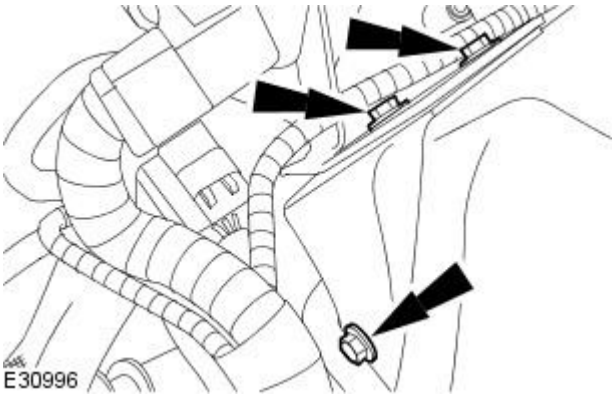


**7.** Detach the wiring harness mounting bracket.

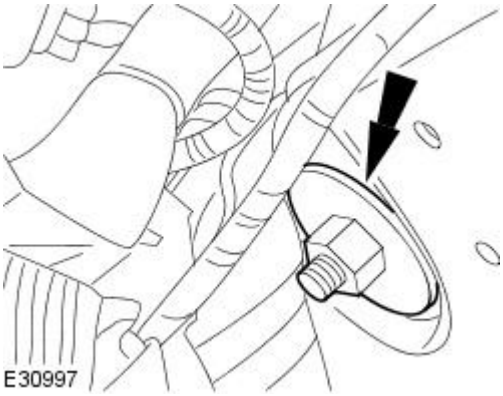


**8.** Remove the upper arm retaining nut.

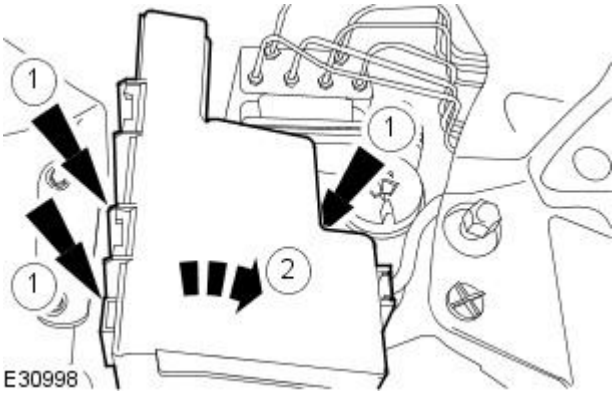


**9.** Detach the engine compartment battery junction box.

1. Release the engine compartment battery junction box retaining clips.
2. Detach the engine compartment battery junction box.

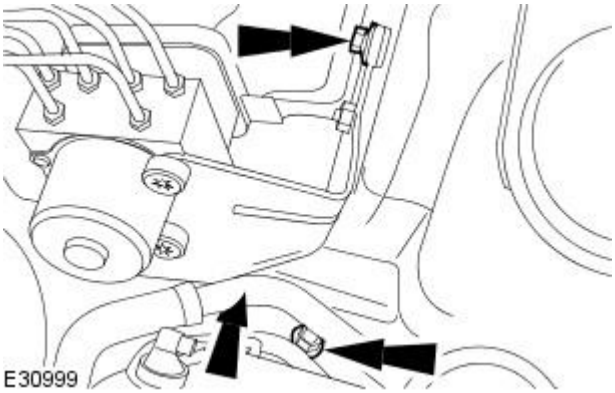


**10.** Detach the hydraulic control unit.

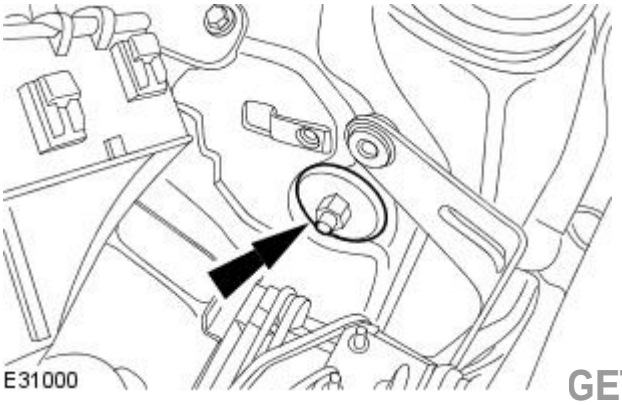


**11.** Remove the upper arm retaining nut.

GETtheMANUALS.org

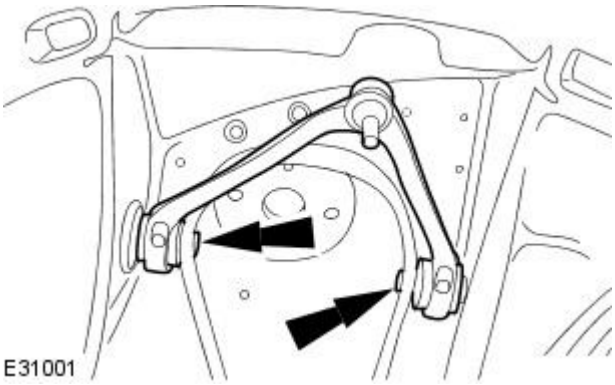


**12.** Remove the upper arm.

## Installation

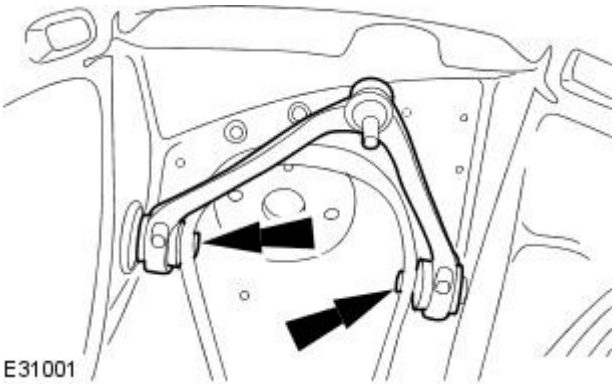


**1.** Install the upper arm.

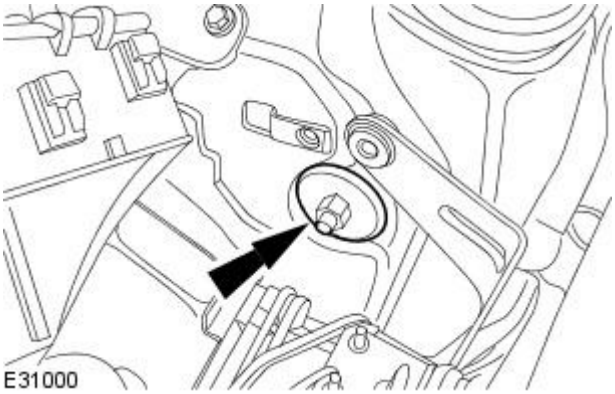


**2.** Install the upper arm retaining nut.

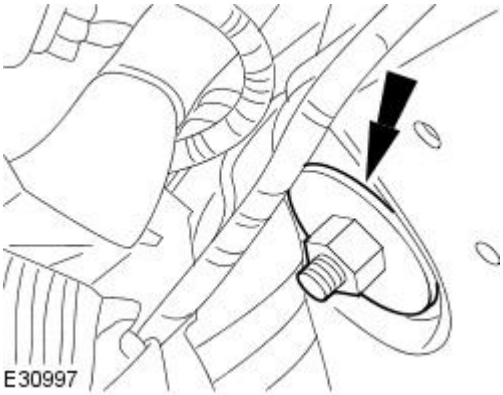


**3.** Install the upper arm retaining nut.

**4.** Install the shock absorber and spring assembly.
For additional information, refer to Shock Absorber and Spring Assembly in this section.

GETtheMANUALS.org

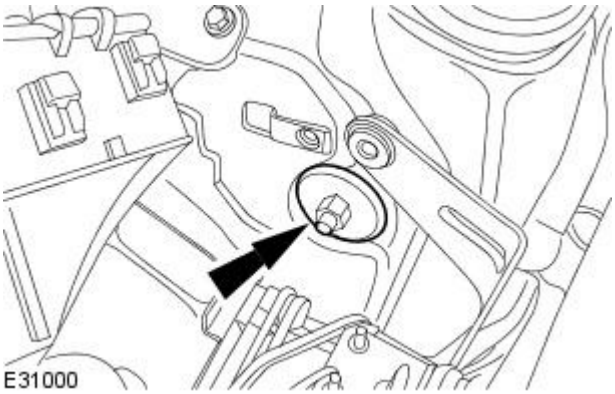


**5.** CAUTION: The final tightening of the Upper arm retaining nut must be carried out with the vehicle on its wheels.

Tighten to 47 Nm.

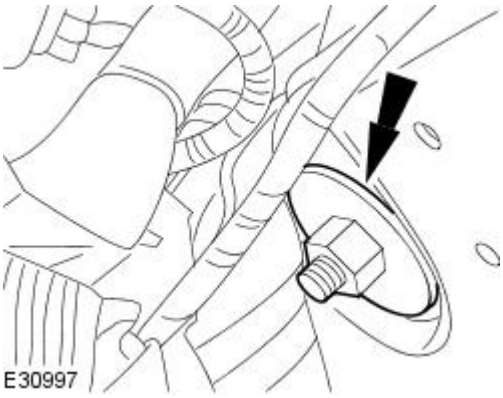


**6.** CAUTION: The final tightening of the Upper arm retaining nut must be carried out with the vehicle on its wheels.

Tighten to 47 Nm.

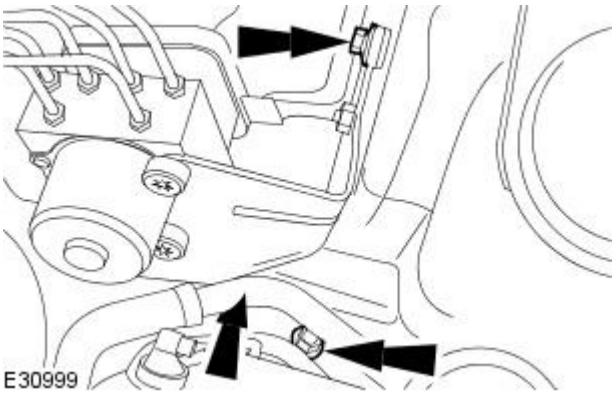


**7.** Attach the hydraulic control unit.

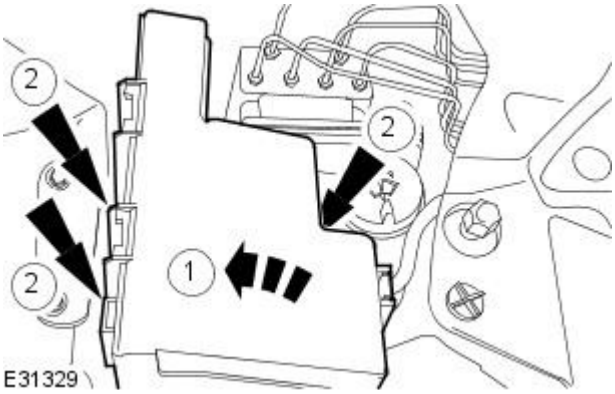


**8.** Attach the engine compartment battery junction box.

1. reposition the engine compartment battery junction box .
2. Attach the engine compartment battery junction box.

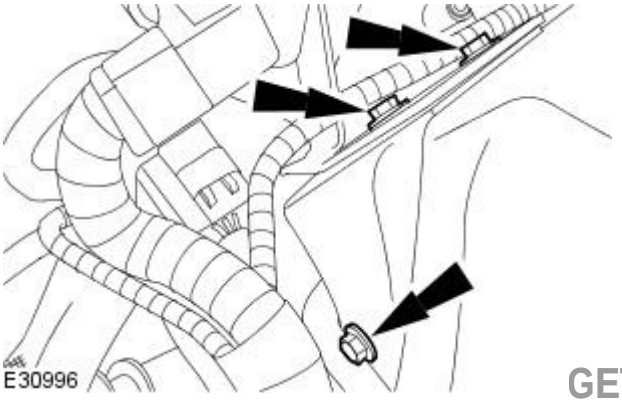


**9.** Attach the wiring harness mounting bracket.

GETtheMANUALS.org

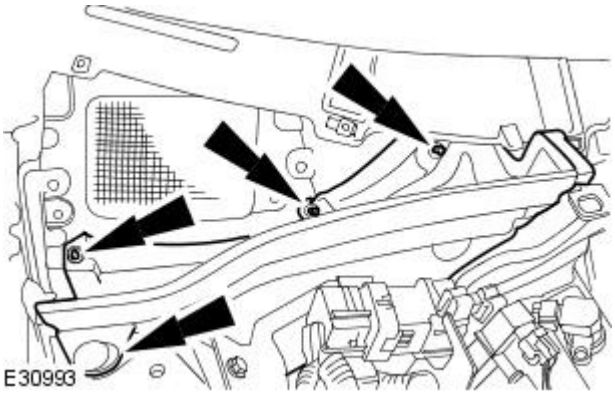


**10.** Install the engine compartment panel.

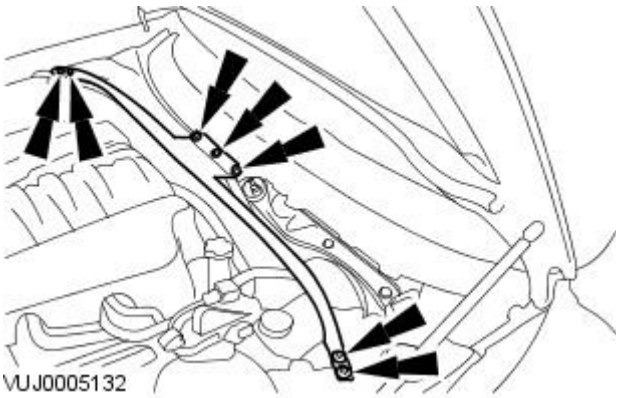


**11.** Install the engine compartment support.

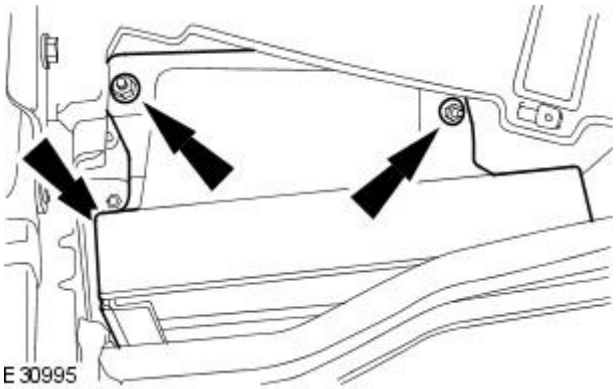


**12.** Install the cabin air filter housing.

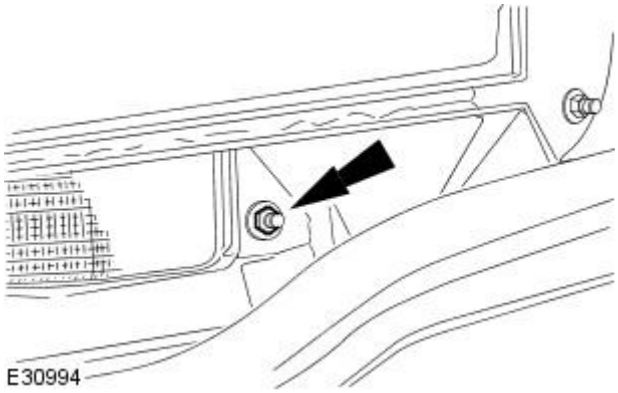


**13.** Install the cabin air filter housing retaining nut.

**14.** Install the cabin air filter.
For additional information, refer to Section 412-01 Air Distribution and Filtering.

GETtheMANUALS.org

# Front Suspension - Front Wheel Bearing and Wheel Hub

Removal and Installation

## Removal

1. Remove the brake disc. For additional information, refer to: (206-03 Front Disc Brake)

   Brake Disc - Vehicles With: Standard Brakes, VIN Range: M45255->N52047 (Removal and Installation),
   Brake Disc - Vehicles With: Standard Brakes, VIN Range: N52048->N99999 (Removal and Installation),
   Brake Disc - Vehicles With: High Performance Brakes, VIN Range: M45255->N52047 (Removal and Installation),
   Brake Disc - Vehicles With: High Performance Brakes, VIN Range: N52048->N99999 (Removal and Installation).

2. Detach the front wheel speed sensor harness.

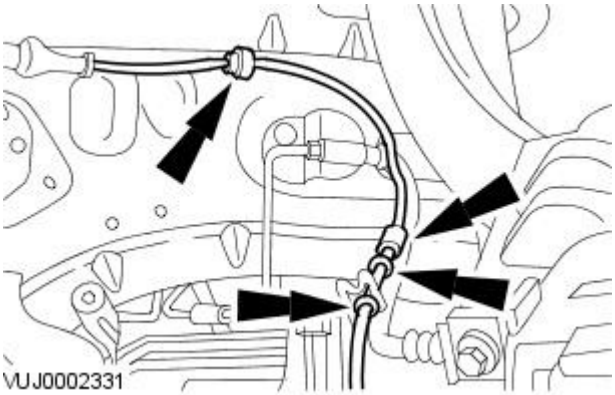


3. Remove the front wheel speed sensor.
   - Disconnect the electrical connector.

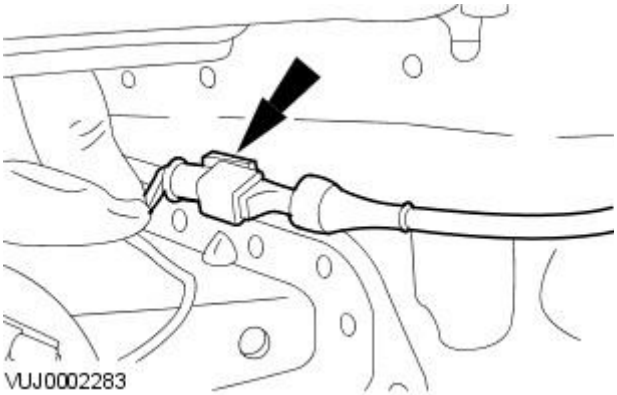


4. CAUTION: Do not attempt to release the wheel hub by hitting it with a hammer directly, loosen the wheel hub retaining bolts partially before applying an even amount of force to the head of each bolts to release the wheel hub from the wheel knuckle. Failure to follow this instruction may cause damage to the component.

   Remove the wheel bearing and wheel hub retaining bolts.

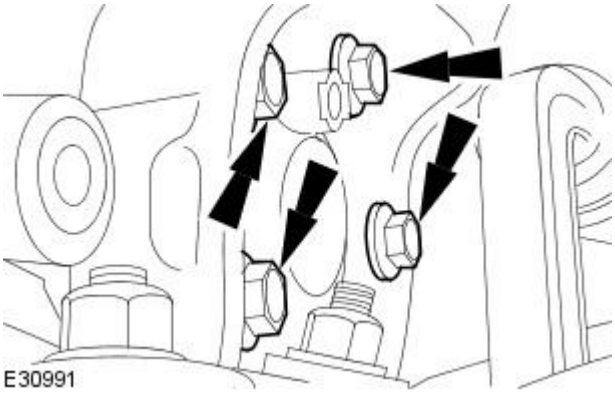


5. Remove the wheel bearing and wheel hub.

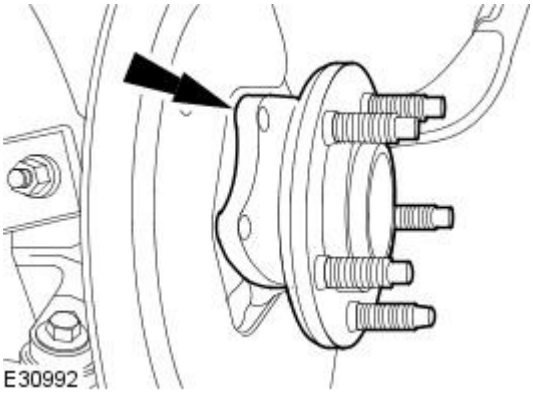


GETtheMANUALS.org

## Installation

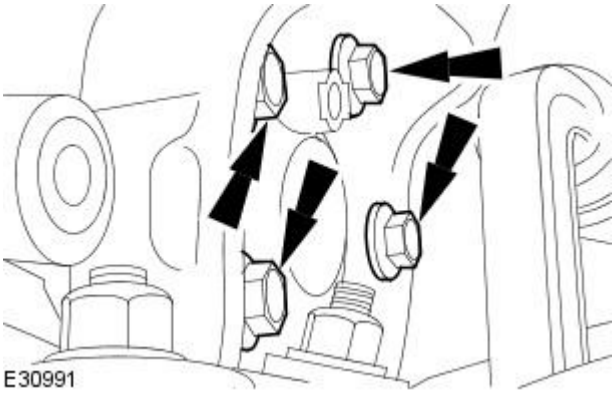


1. To install, reverse the removal procedure.
   - Tighten to 90 Nm.

GETtheMANUALS.org

# Front Suspension - Wheel Knuckle

Removal and Installation

| Special Tool(s) | |
|---|---|
| 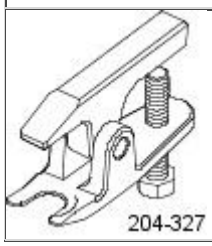 204-327 | Ball Joint Splitter<br><br>204-327 |

## Removal

**1.** Remove the brake disc shield. For additional information, refer to:

Brake Disc Shield - Vehicles With: Standard Brakes (206-03 Front Disc Brake, Removal and Installation),
Brake Disc Shield - Vehicles With: High Performance Brakes (206-03, Removal and Installation).

**2.** Remove the stabilizer bar link retaining nut.

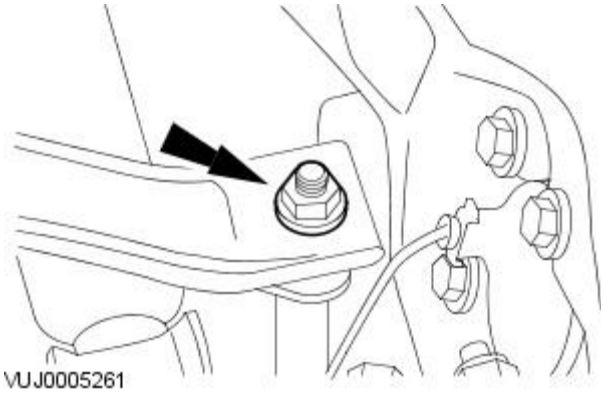
VUJ0005261

**3.** Remove the stabilizer bar link.

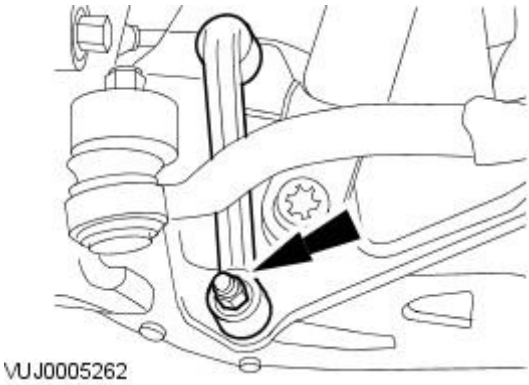
VUJ0005262

**4.** CAUTION: Prevent the tie-rod end ball joint ball pin hexagon from rotating. Failure to follow this instruction may result in damage to the tie-rod end ball joint boot.

Detach the tie-rod end.

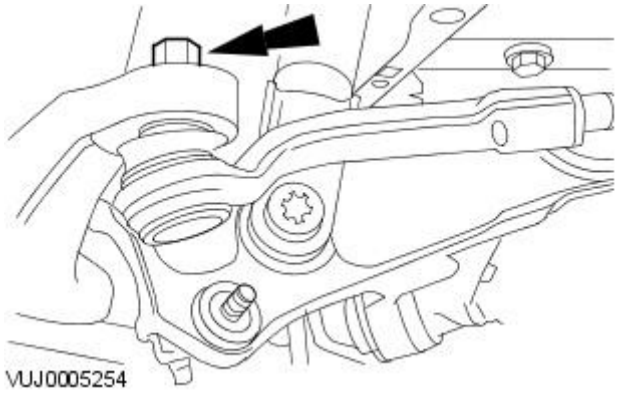
VUJ0005254

GETtheMANUALS.org

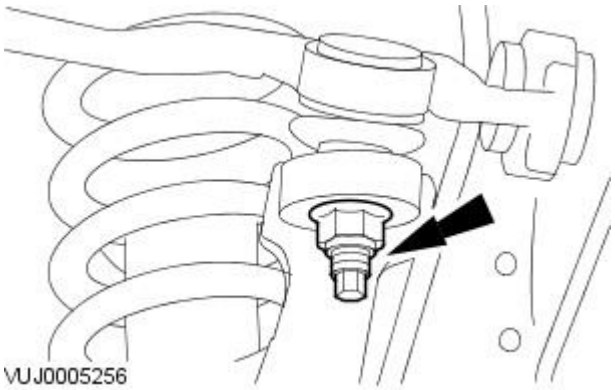


**5.** CAUTIONS:

Prevent the upper ball joint ball pin hexagon from rotating. Failure to do so may result in damage to the upper ball joint boot.

Make sure the wheel knuckle is supported. Failure to follow these instructions may result in damage to the component.

Detach the upper arm.

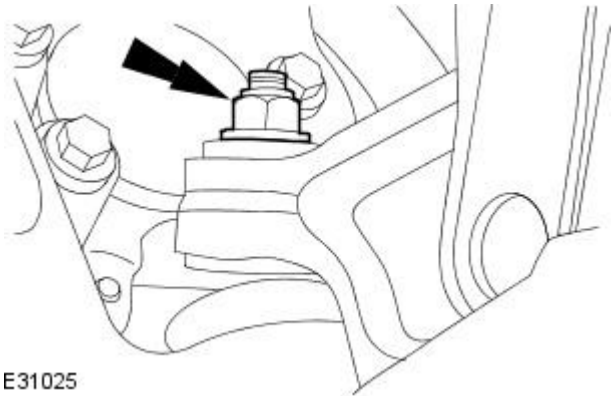


**6.** CAUTION: Prevent the rear lower arm ball joint ball pin hexagon from rotating. Failure to follow this instruction may result in damage to the lower ball joint boot.

Loosen the rear lower arm ball joint retaining nut.

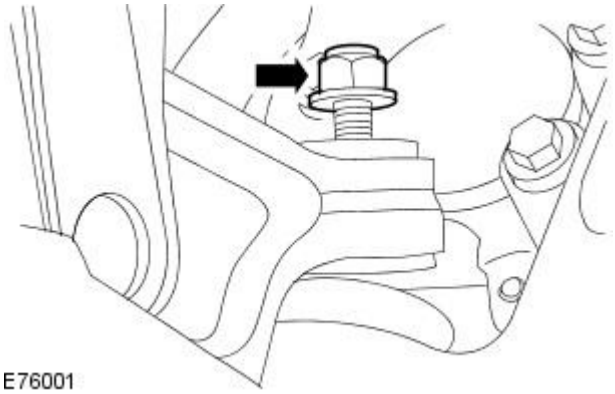


**7.** CAUTION: Prevent the rear lower arm ball joint ball pin hexagon from rotating. Failure to follow this instruction may result in damage to the lower ball joint boot.

Adjust the rear lower arm ball joint retaining nut until the ball joint thread cannot be seen.

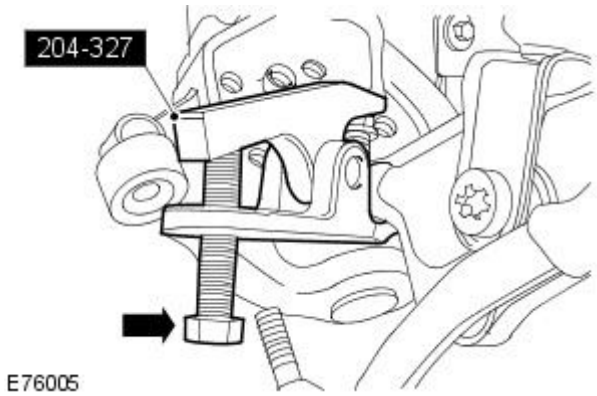


**8.** WARNING: Make sure the special tool is supported while carrying out the operation. Failure to follow this instruction may result in personal injury.

• CAUTIONS:

Make sure the special tool is supported while carrying out the operation. Failure to follow this instruction may result in damage to the special tool.

Make sure the special tool is correctly located and the lower ball joint boot is not damaged while carrying out the operation. Failure to follow this instruction may result in damage to the component.

Using the special tool, release the rear lower arm ball joint from the wheel knuckle lower pivot.

**8.** CAUTION: Make sure the special tool is not over tightened while carrying out the operation. Failure to follow this instruction may result in damage to the special tool.

- Tighten the special tool adjusting bolt to a maximum of 60 Nm.
- If the rear lower arm ball joint releases from the wheel knuckle lower pivot using no more than 60 Nm on the special tool adjusting bolt, proceed to step 10.
- If the rear lower arm ball joint does not release from the wheel knuckle lower pivot using no more than 60 Nm on the special tool adjusting bolt, proceed to step 9.

GETtheMANUALS.org

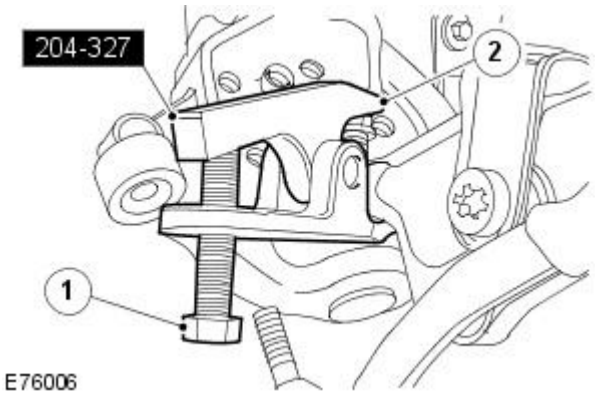


**9.** WARNING: Make sure the special tool is supported while carrying out the operation. Failure to follow this instruction may result in personal injury.

• CAUTIONS:

Make sure the special tool is supported while carrying out the operation. Failure to follow this instruction may result in damage to the special tool.

Make sure the special tool is correctly located and the lower ball joint boot is not damaged while carrying out the operation. Failure to follow this instruction may result in damage to the component.

• NOTE: Do not carry out this step if the rear lower arm ball joint released from the wheel knuckle lower pivot in step 8.

Using the special tool, release the rear lower arm ball joint from the wheel knuckle lower pivot.

**9.** CAUTION: Make sure the special tool is not over tightened while carrying out the operation. Failure to follow this instruction may result in damage to the special tool.

1. Tighten the special tool adjusting bolt to a maximum of 60 Nm.
2. Strike the top surface of the special tool directly above the rear lower arm ball joint at the point indicated using a copper and hide mallet.

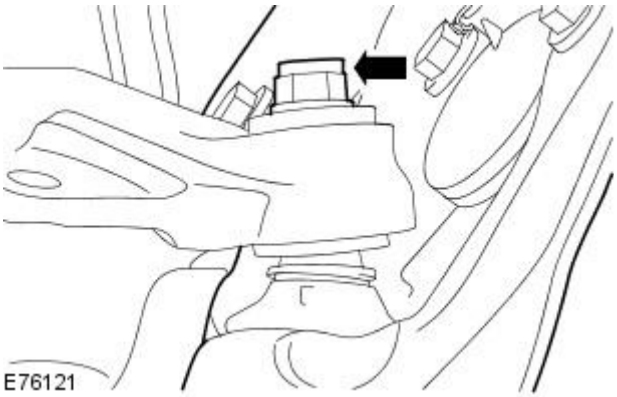


**10.** WARNING: Make sure the wheel knuckle is supported while carrying out the operation. Failure to follow this instruction may result in personal injury.

• CAUTIONS:

Make sure the wheel knuckle is supported while carrying out the operation. Failure to follow this instruction may result in may result in damage to the component.

Prevent the rear lower arm ball joint ball pin hexagon from rotating. Failure to follow this instruction may result in damage to the lower ball joint boot.

Remove the wheel knuckle.

- Remove and discard the retaining nut.

## Installation

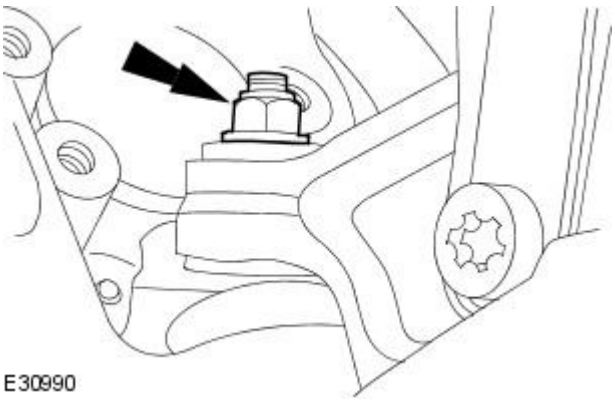


**1.** CAUTION: Prevent the rear lower arm ball joint ball pin hexagon from rotating. Failure to follow this instruction may result in damage to the lower ball joint boot.

• NOTE: Install a new retaining nut.

Install the wheel knuckle

- Tighten to 92 Nm.

GETtheMANUALS.org

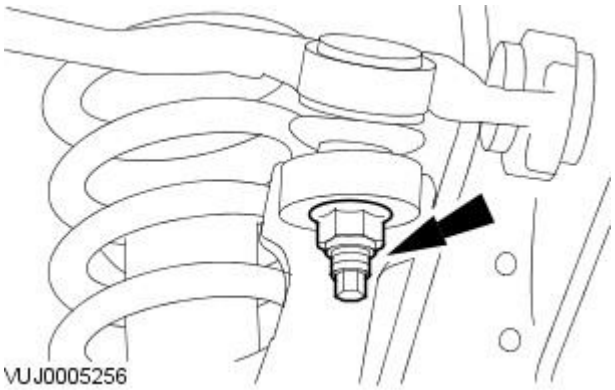


**2.** Attach the upper arm.

- Tighten to 90 Nm.

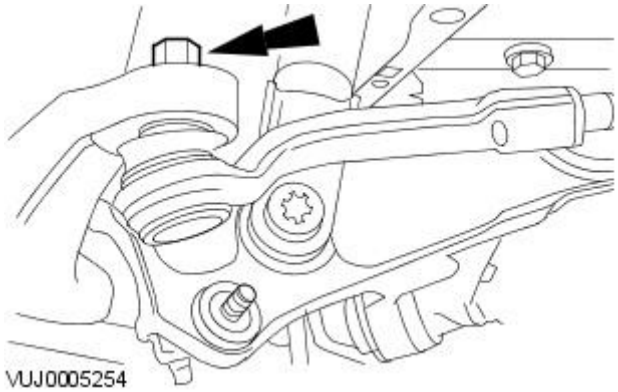


**3.** Attach the tie-rod end.

- Tighten to 55 Nm.

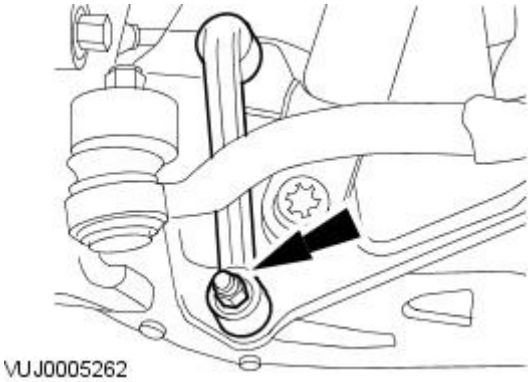


**4.** Install the stabilizer bar link.

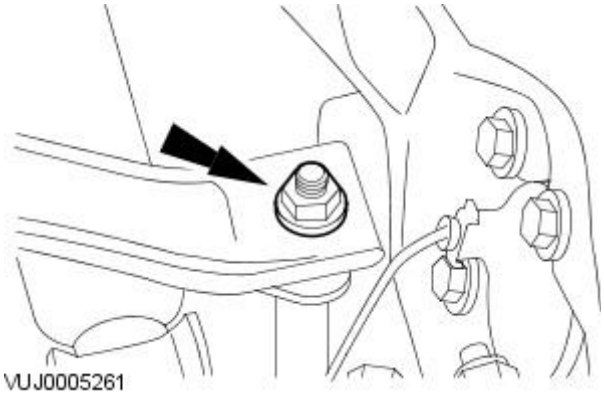


**5.** Attach the stabilizer bar link.

- Tighten to 47 Nm.

**6.** Install the brake disc shield. For additional information, refer to:

Brake Disc Shield - Vehicles With: Standard Brakes (206-03 Front Disc Brake, Removal and Installation),
Brake Disc Shield - Vehicles With: High Performance Brakes (206-03, Removal and Installation).

GETtheMANUALS.org

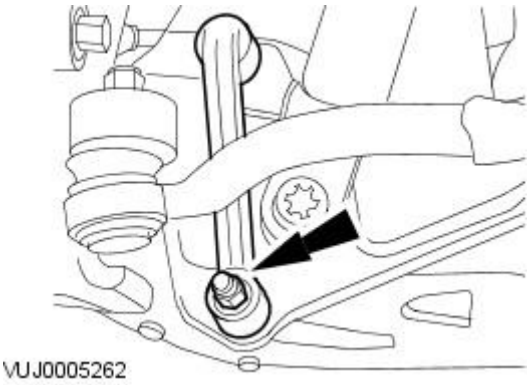


**7.** Tighten to 70 Nm.

GETtheMANUALS.org

# Front Suspension - Shock Absorber and Spring Assembly

Disassembly and Assembly

| Special Tool(s) | |
|---|---|
| 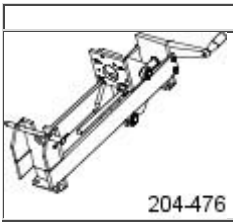 204-476 | Spring Compressor<br><br>204-476 |

## Disassembly

1. Remove the shock absorber and spring assembly.
   For additional information, refer to Shock Absorber and Spring Assembly in this section.
2. Install the shock absorber and spring assembly to the special tool

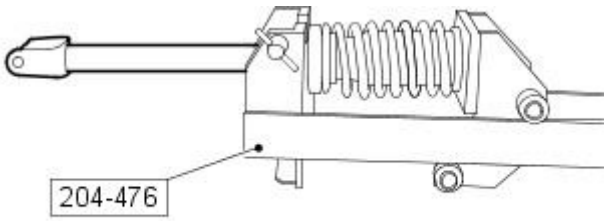


E31037

3. WARNING: THE SPRING IS UNDER EXTREME TENSION, CARE MUST BE TAKEN AT ALL TIMES. FAILURE TO FOLLOW THESE INSTRUCTIONS MAY RESULT IN PERSONAL INJURY.

   Compress the road spring.

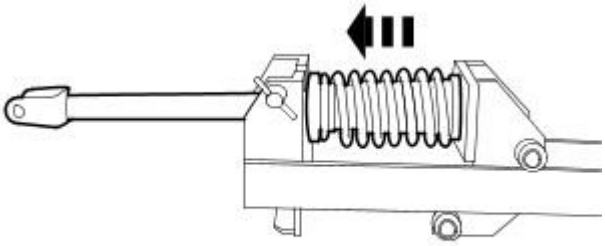

E31041

4. Remove the shock absorber retaining nut.

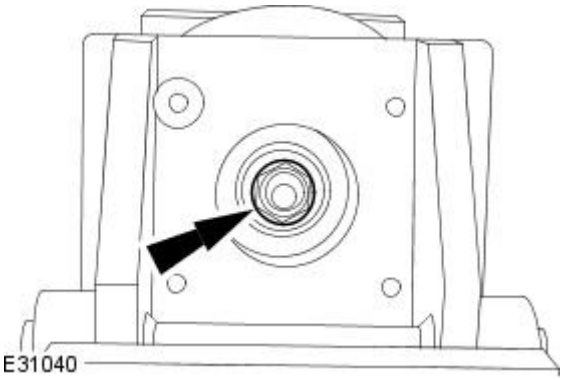

E31040

5. Release the road spring.

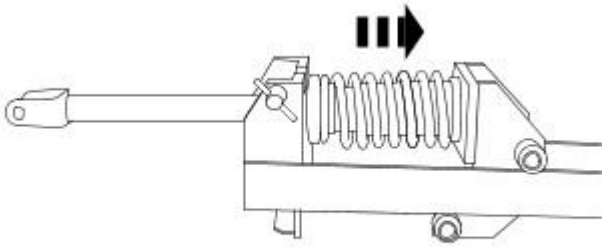

E31039

GETtheMANUALS.org

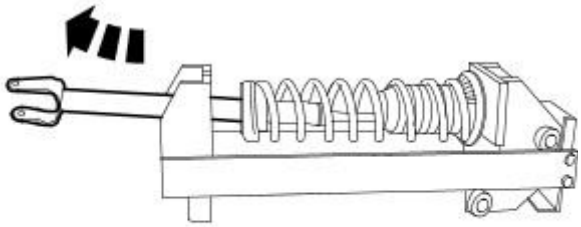

E31042

6. Remove the shock absorber.

## Assembly

1. CAUTION: Make sure the spring ends align correctly against the spring seats

To assemble, reverse the disassembly procedure.

2. Vehicles without adaptive damping.
   - Tighten to 50 Nm.

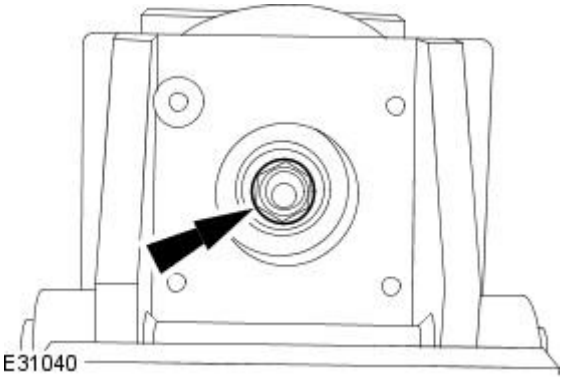

E31040

3. Vehicles with adaptive damping.
   - Tighten to 27 Nm.

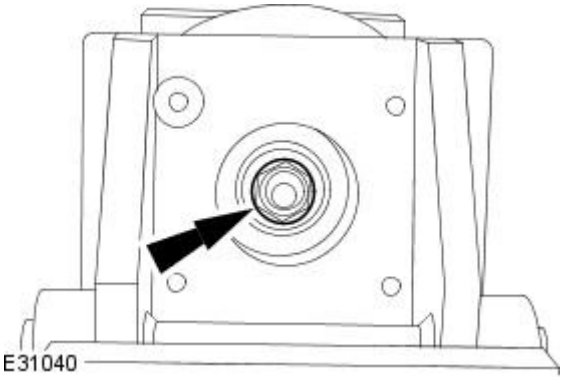

E31040

GETtheMANUALS.org

# Rear Suspension -

**Torque Specifications**

| Description | Nm | lb-ft | lb-in |
|---|---|---|---|
| Tie rod outer bolt | 55 | 41 | - |
| Lower arm inner bolts | 163 | 120 | - |
| Lower arm outer bolt | 150 | 111 | - |
| Upper arm ball joint nut | 90 | 66 | - |
| Upper arm inner bolts | 98 | 72 | - |
| Shock absorber upper fixing nuts | 28 | 21 | - |
| Lower shock absorber bolt | 133 | 98 | - |
| Shock absorber top mounting nut without adaptive damping | 50 | 41 | - |
| Shock absorber top mounting nut with adaptive damping | 27 | 20 | - |
| Stabilizer bar | 55 | 41 | - |
| Stabilizer link mounting nuts | 48 | 35 | - |
| Wheel hub nut | 300 | 221 | - |

GETtheMANUALS.org

# Rear Suspension - Rear Suspension

Description and Operation

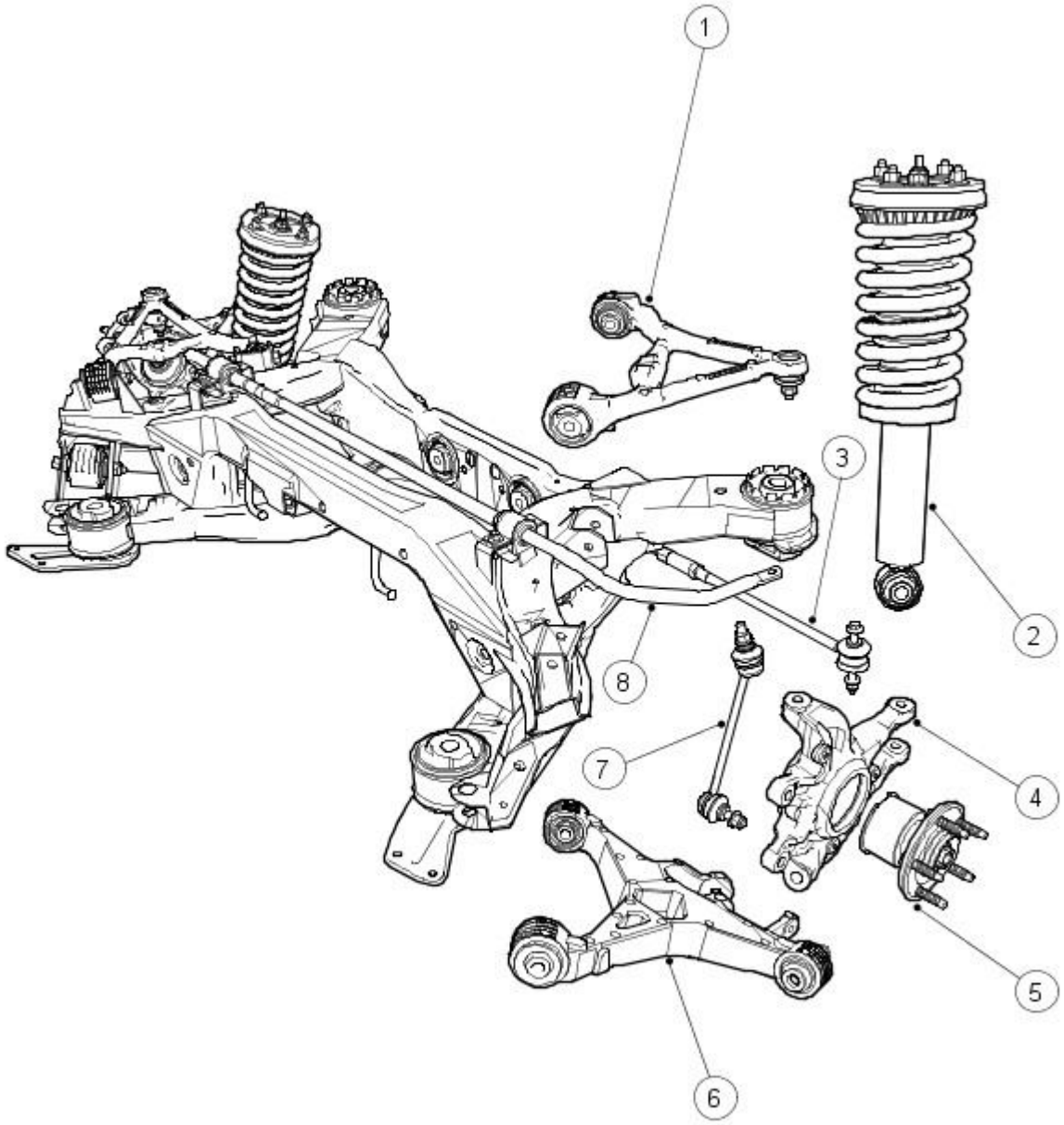


E31008

| Item | Part Number | Description |
|---|---|---|
| 1 | — | Upper arm |
| 2 | — | Shock absorber and spring assembly |
| 3 | — | Tie rod |
| 4 | — | Wheel knuckle |
| 5 | — | Wheel hub |
| 6 | — | Lower arm |
| 7 | — | Stabilizer bar link |
| 8 | - | Stabilizer bar |

The independent rear suspension features aluminium upper and lower control arms which carry the hub assemblies and shock absorber and spring assemblies.

## Components

The wheel knuckle:

- carries the wheel hub.
- carries the brake caliper assembly.
- carries the Anti-lock brake (ABS) sensor.
- carries the wheel hub bearing and bearing seals.
- is of a unique design for vehicles with supercharger.

The stabilizer link:

- is of a steel construction with a ball joint at each end.
- transmits vertical movements of the rear suspension to the stabilizer bar.

The stabilizer bar:

- is mounted on the subframe.
- is connected to the left and right hand lower wishbones by the stabilizer bar drop links.
- is fitted to all models with or without sports suspension.

GETtheMANUALS.org

The upper arm:

- is a one piece aluminium casting and incorporates a built in ball joint.
- is the upper support for the wheel knuckle.
- is fitted with height sensors which is part of the high intensity discharge (HID) lights feature.

The tie rod:

- is of a two piece steel construction with a ball joint at both ends.
- is utilized to adjust rear wheel alignment.

The lower arm:

- is a one piece aluminium casting, with integral mounting points for the shock absorber and spring assembly and the stabilizer bar link.
- is the lower support for the wheel knuckle.
- vehicles with supercharger have a stronger lower arm for the increased torque capacity.

## Shock Absorber and Spring Assembly

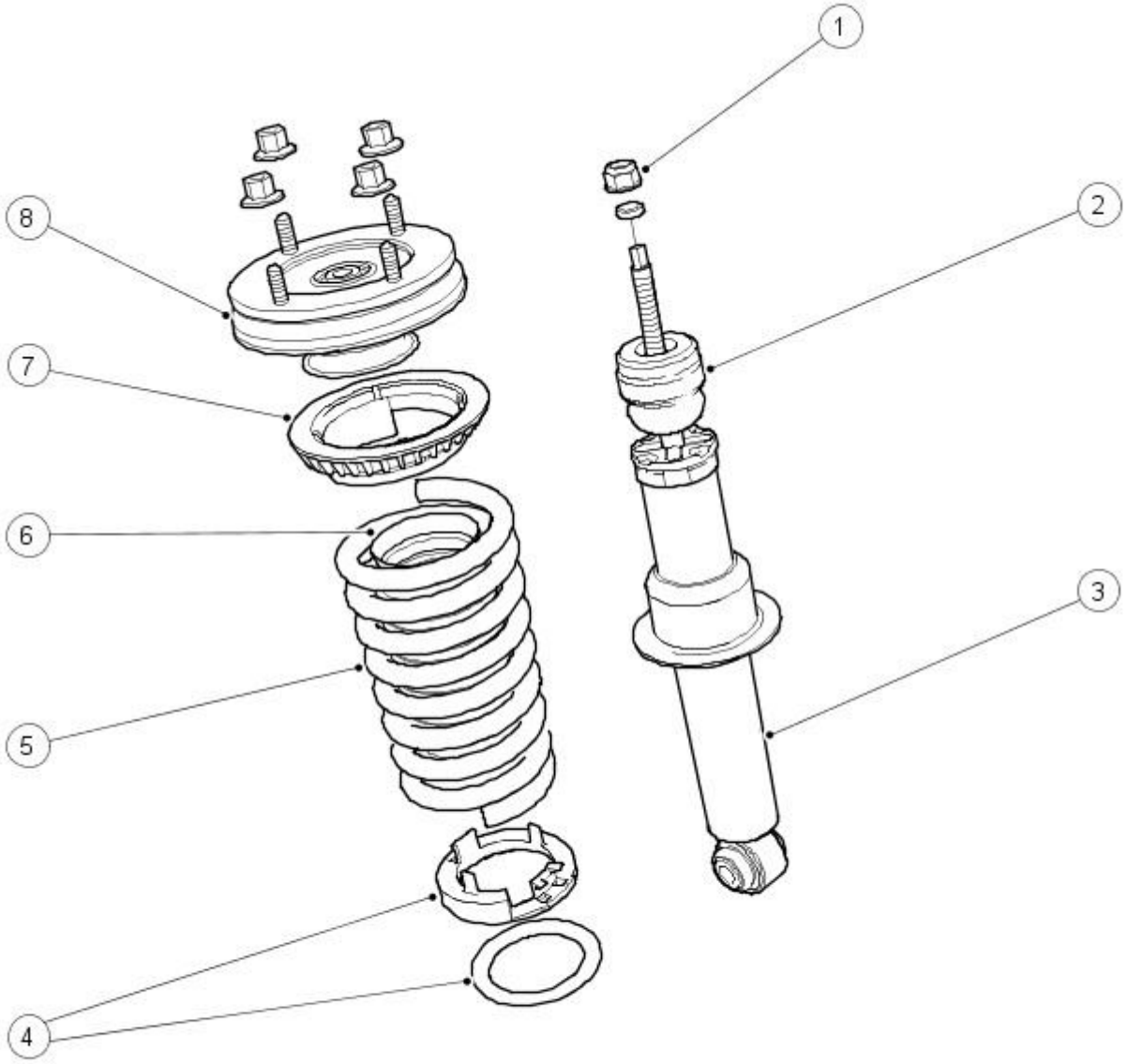


E30543

| Item | Part Number | Description |
|---|---|---|
| 1 | — | Retaining nut |
| 2 | — | Bump stop |
| 3 | — | Shock absorber |
| 4 | — | Spring lower isolator |
| 5 | — | Spring |
| 6 | — | Shock absorber boot |
| 7 | — | Spring upper isolator |
| 8 | - | Mounting plate |

The shock absorber and spring assembly is mounted between the lower wishbone and the vehicle body.

There are several variants of spring and damper combinations to enable standard and sport suspension options.

GETtheMANUALS.org

Published: 11-May-2011

# Rear Suspension - Rear Suspension

Diagnosis and Testing

For additional information, refer toSection 204-00 Suspension System - General Information.

GETtheMANUALS.org

# Rear Suspension - Lower Arm

Removal and Installation

## Removal

All vehicles

1. Make sure the park brake is in the off position.
2. Remove the wheel and tire.
   For additional information, refer to Section 204-04 Wheels and Tires.
3. Detach the shock absorber and spring assembly from the lower arm.

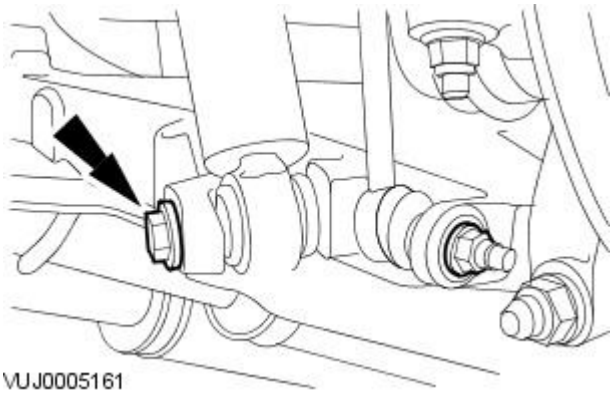

VUJ0005161

4. Detach the stabilizer bar link.

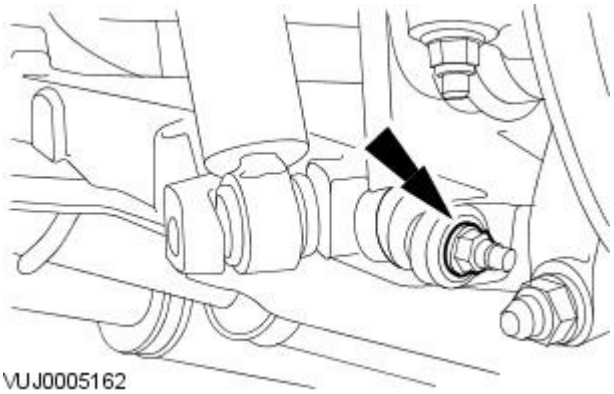

VUJ0005162

Vehicles without Brembo brakes

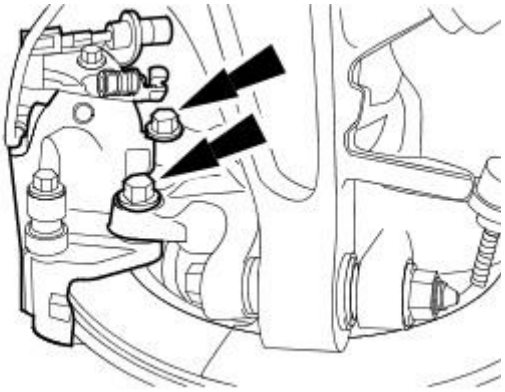

E30550

5. CAUTION: The brake caliper must be supported at all times.

   Detach the brake caliper and secure to one side.

   - Remove and discard the brake caliper retaining bolts.

Vehicles with Brembo brakes

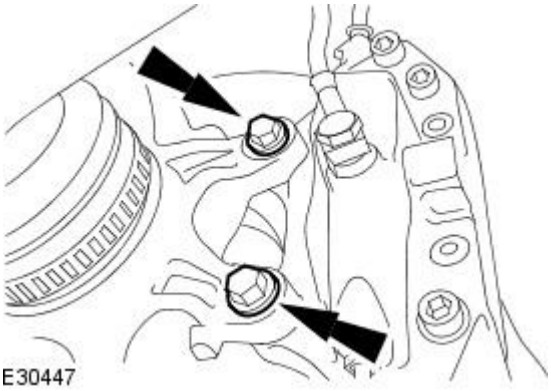

E30447

6. CAUTION: The brake caliper must be supported at all times.

   Detach the brake caliper and secure to one side.

   - Remove and discard the brake caliper retaining bolts.

GETtheMANUALS.org

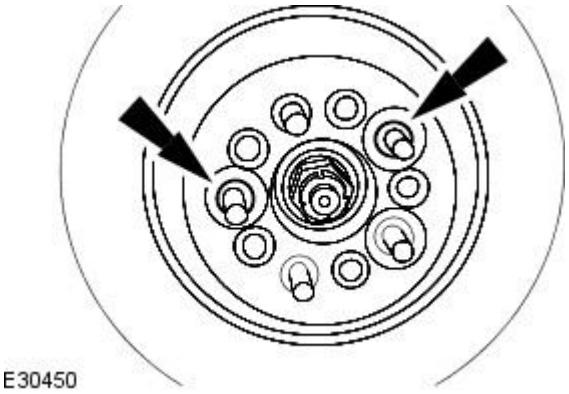


**7.** Remove and discard the retaining clips and reposition the brake disc.

All vehicles

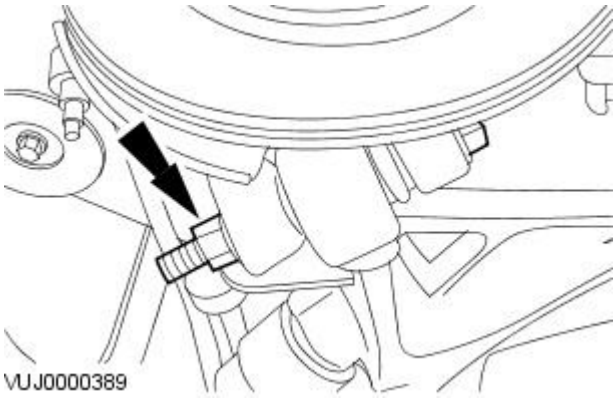


**8.** Detach the lower arm from the wheel hub assembly.

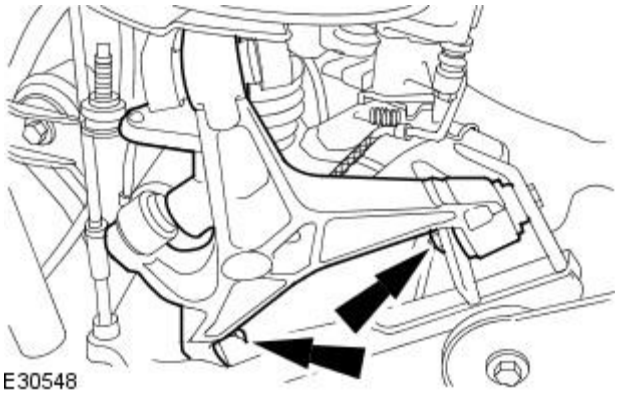


**9.** Remove the lower arm.

## Installation

All vehicles

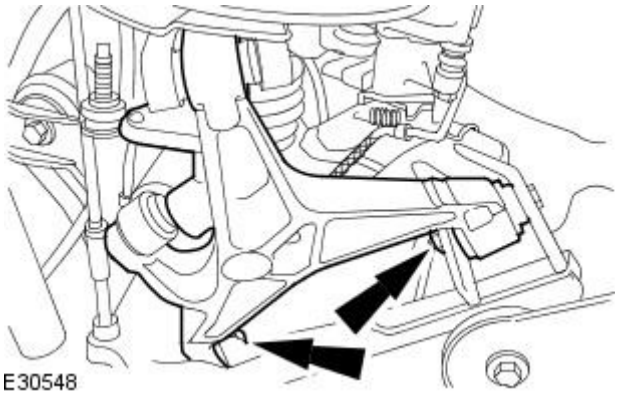


**1.** CAUTION: The final tightening of the rear suspension components must be carried out with the vehicle on its wheels.

Install the lower arm.

- Install the retaining bolts.

GETtheMANUALS.org

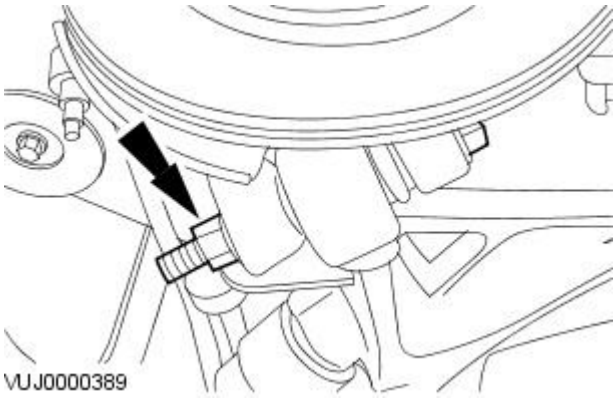


**2.** CAUTION: The final tightening of the rear suspension components must be carried out with the vehicle on its wheels.

Install the retaining bolt.

Vehicles without Brembo brakes

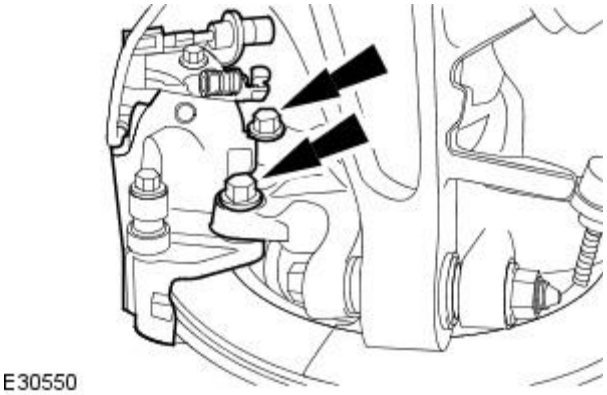


**3.** Attach the brake caliper.

- Install new brake caliper retaining bolts.
- Tighten to 103 Nm.

Vehicles with Brembo brakes

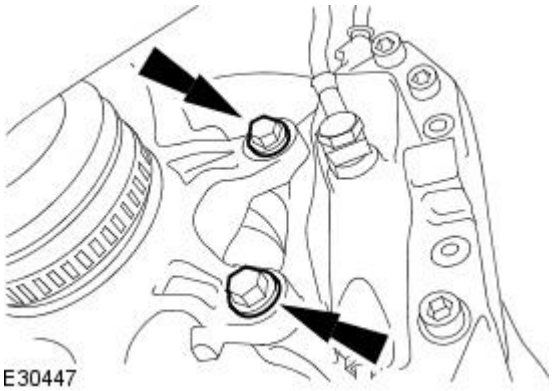


**4.** Attach the brake caliper.

- Install new brake caliper retaining bolts.
- Tighten to 70 Nm.

All vehicles

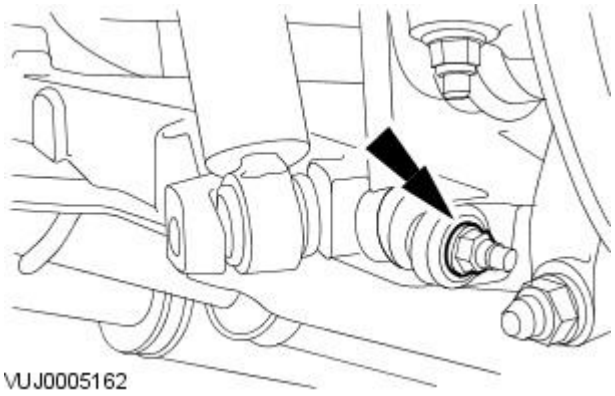


**5.** Attach the stabilizer bar link.

- Tighten to 48 Nm.

GETtheMANUALS.org

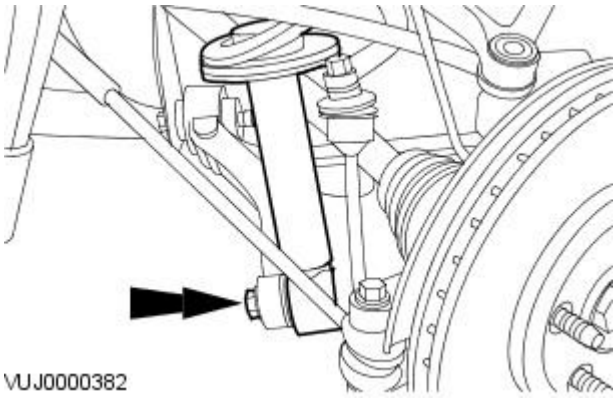


**6.** CAUTION: The final tightening of the rear suspension components must be carried out with the vehicle on its wheels.

Install the the shock absorber and spring assembly retaining bolt.

**7.** Install the wheel and tire.
For additional information, refer to Section 204-04 Wheels and Tires.

**8.** Lower the vehicle.

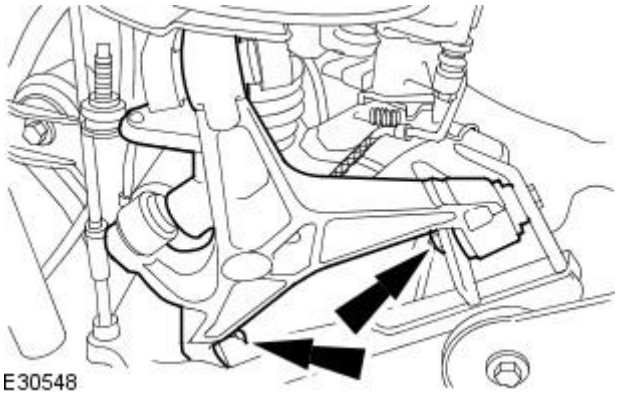


**9.** CAUTION: The final tightening of the rear suspension components must be carried out with the vehicle on its wheels.

Tighten to 163 Nm.

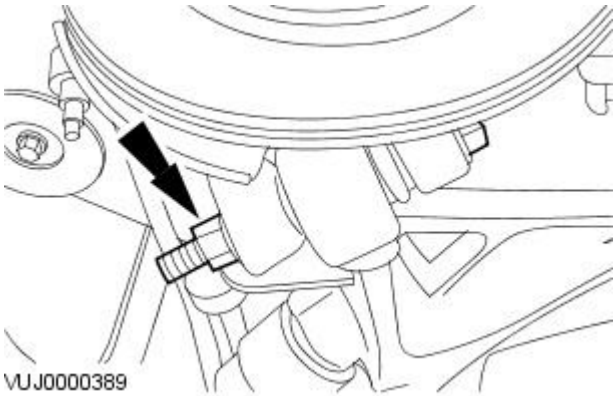


**10.** CAUTION: The final tightening of the rear suspension components must be carried out with the vehicle on its wheels.

Tighten to 150 Nm.

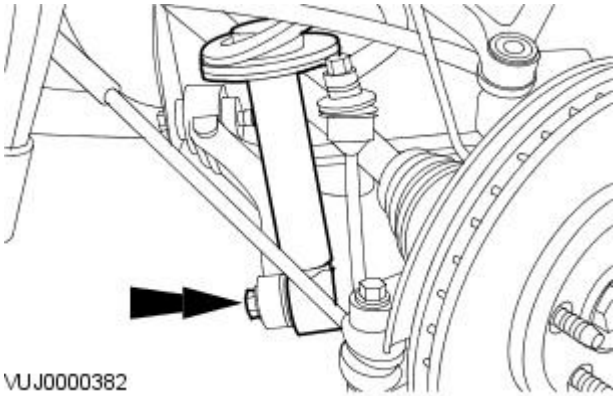


**11.** CAUTION: The final tightening of the rear suspension components must be carried out with the vehicle on its wheels.

Tighten to 133 Nm.

**12.** Check the wheel alignment and adjust as necessary.
For additional information, refer to Section 204-00 Suspension System - General Information.

GETtheMANUALS.org

# Rear Suspension - Shock Absorber and Spring Assembly

Removal and Installation

## Removal

All Vehicles

1. Remove the luggage compartment side trim panel.
   For additional information, refer to Section 501-05 Interior Trim and Ornamentation.

Vehicles with Active Suspension

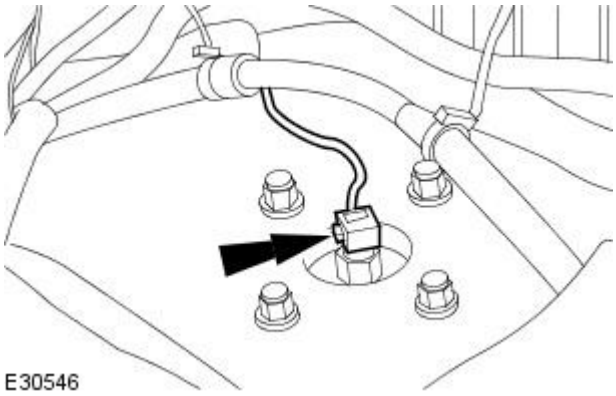


2. Disconnect the active suspension damper electrical connector.

All Vehicles

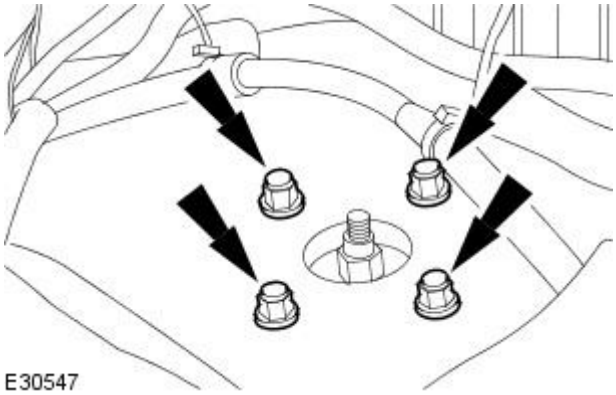


3. Remove the retaining nuts.

4. Remove the wheel and tire.
   For additional information, refer to Section 204-04 Wheels and Tires.

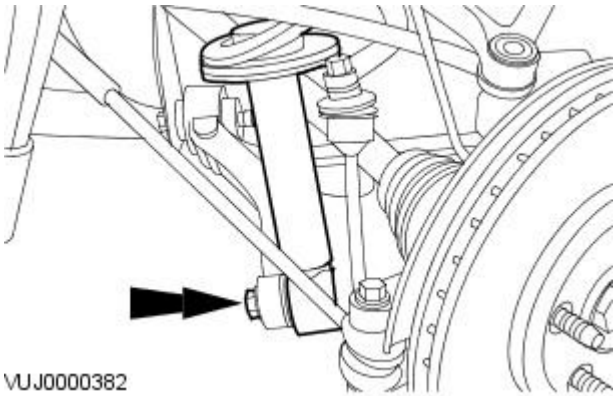


5. Remove the shock absorber and spring assembly.

## Installation

All vehicles

GETtheMANUALS.org

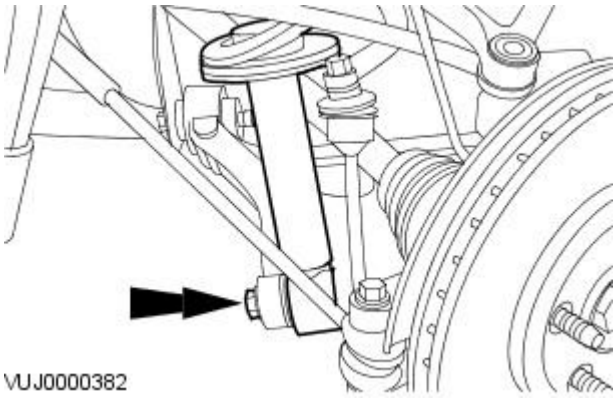


**1.** CAUTION: The final tightening of the rear suspension components must be carried out with the vehicle on its wheels.

Install the the shock absorber and spring assembly retaining bolt.

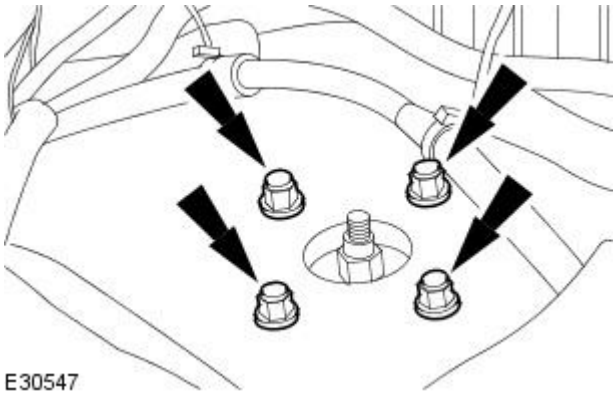


**2.** Install the the shock absorber and spring assembly retaining nuts.

- Tighten to 28 Nm.

Vehicles with Active Suspension

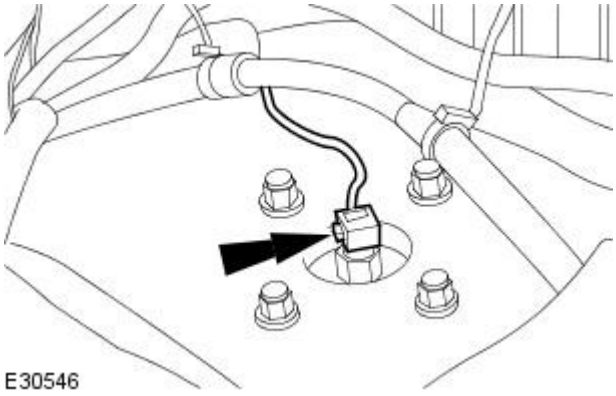


**3.** Connect the active suspension damper electrical connector.

All vehicles

**4.** Install the wheel and tire.
For additional information, refer to Section 204-04 Wheels and Tires.

**5.** Lower the vehicle.

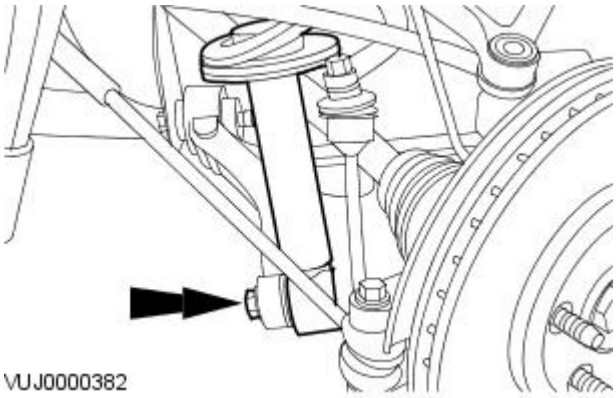


**6.** CAUTION: The final tightening of the rear suspension components must be carried out with the vehicle on its wheels.

Tighten to 133 Nm.

**7.** Check the wheel alignment and adjust as necessary.
For additional information, refer to Section 204-00 Suspension System - General Information.

GETtheMANUALS.org

# Rear Suspension - Shock Absorber Lower Bushing

Removal and Installation

| Special Tool(s) | |
|---|---|
| 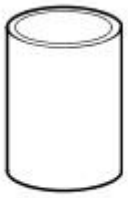 E52622 | Bushing Remover / installer<br><br>204-335 |
| 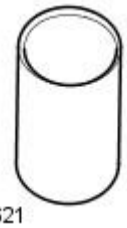 E52621 | Bushing remover<br><br>204-533 |
| E52620 | Bushing installer<br><br>204-534 |

## Removal

**1.** WARNING: Failure to follow this instruction may cause damage to the vehicle.

Mark the orientation of the shock absorber in relation to the lower suspension arm.

**2.** Remove the rear shock absorber and spring assembly.
For additional information, refer to: Shock Absorber and Spring Assembly (204-02 Rear Suspension, Removal and Installation).

**3.** NOTE: Place the shock absorber with the recessed side facing upwards.

- NOTE: With assistance make sure the special tool is aligned.

Using the special tool, support the shock absorber.

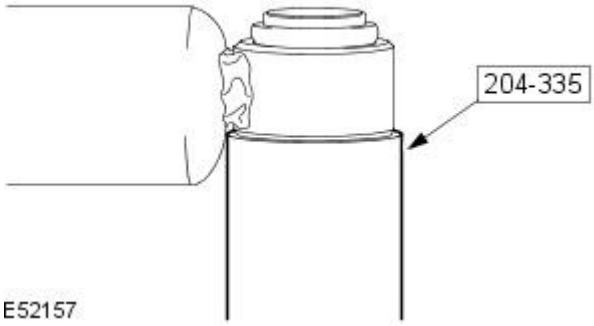


**4.** NOTE: Position the special tool onto the recessed side of the bush.

- NOTE: With assistance make sure the special tool is aligned.

Position and align the special tool to the shock absorber bush.

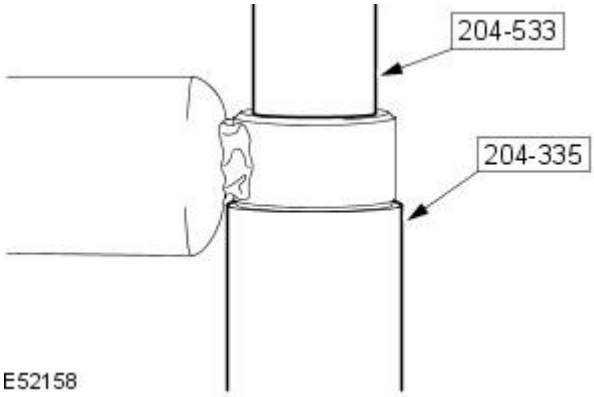


GETtheMANUALS.org

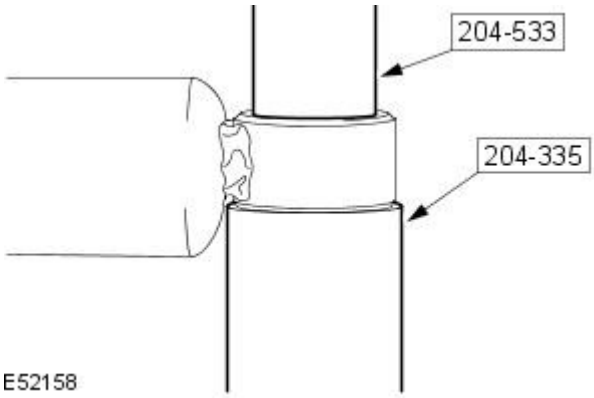


**5.** NOTE: With assistance make sure the component is aligned.

Using the special tools, slowly push the bush from the shock absorber.

## Installation

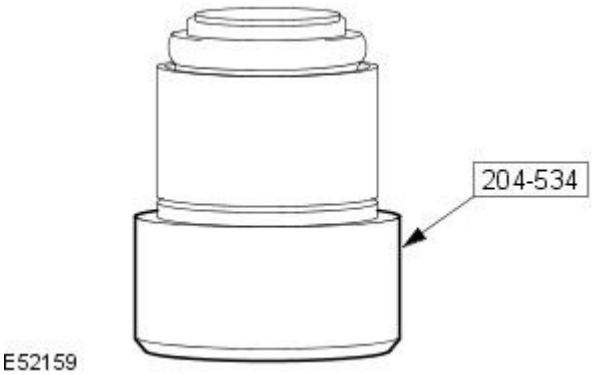


**1.** NOTE: Make sure the bush is clean and free from oil or grease.

• NOTE: Use a suitable lubricant to allow the bush to locate into the special tool.

Locate the new bush in the special tool.

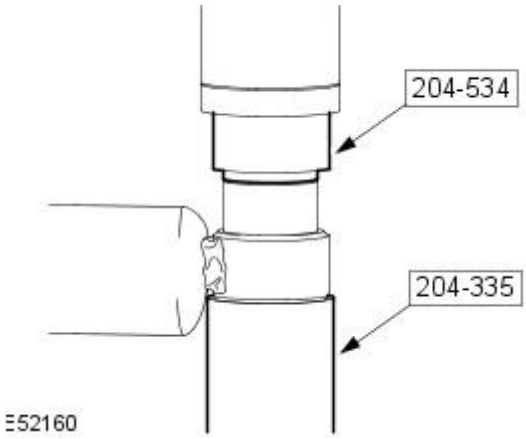


**2.** WARNING: Failure to follow this instruction may cause damage to the vehicle.

• NOTE: Make sure the shock absorber is clean and free from oil or grease and is not damaged prior to pushing in the new bush.

• NOTE: Make sure the bush is installed following the same direction as removal.

• NOTE: Make sure correct alignment is maintained.

Using the special tools, align the bush to the shock absorber.

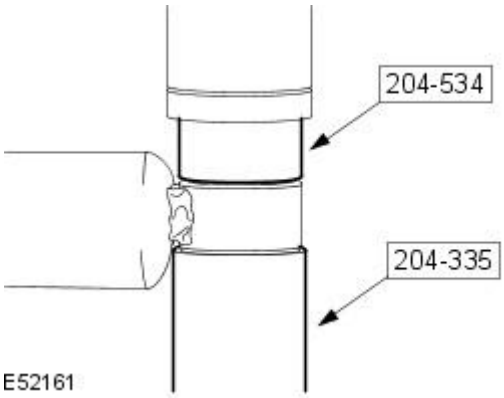


**3.** NOTE: Make sure correct alignment is maintained.

Slowly push the bush into the shock absorber until the tool reaches the stop.

**4.** WARNING: Failure to follow this instruction may cause damage to the vehicle.

• NOTE: Make sure the shock absorber and spring assembly are placed in the correct orientation to the vehicle.

Install the rear shock absorber and spring assembly.
For additional information, refer to: Shock Absorber and Spring Assembly (204-02 Rear Suspension, Removal and Installation).

GETtheMANUALS.org

# Rear Suspension - Rear Stabilizer Bar

Removal and Installation

| Special Tool(s) | |
|---|---|
| 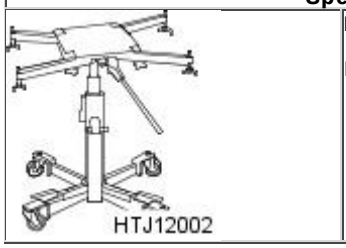 HTJ12002 | Powertrain assembly jack<br><br>HTJ1200-2 |

## Removal

All vehicles

1. Drain the right-hand fuel tank saddle.
   For additional information, refer to Section 310-00 Fuel System - General Information.
2. Remove both the upper arms.
   For additional information, refer to Upper Arm in this section.
3. Remove the front muffler.
   For additional information, refer to Section 309-00 Exhaust System.

Vehicles with Brembo brakes

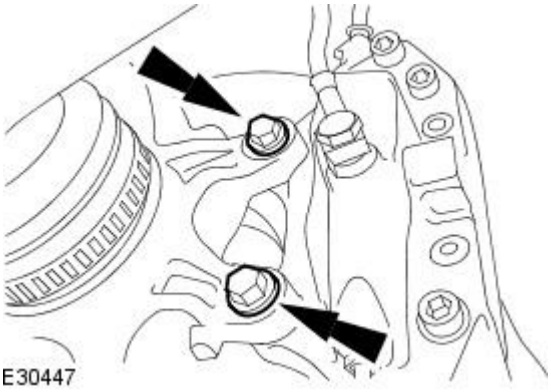
E30447

4. CAUTION: The brake caliper must be supported at all times.

   Detach the brake caliper and secure to one side.

   - Remove and discard the brake caliper retaining bolts.

Vehicles without Brembo brakes

5. Remove the brake pads.
   For additional information, refer to Section 206-04 Rear Disc Brake.

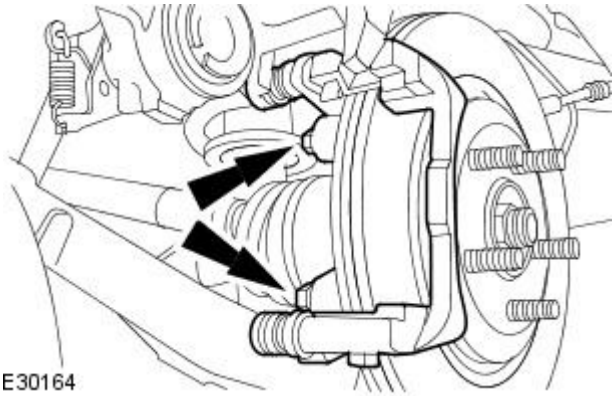
E30164

6. CAUTION: The brake caliper must be supported at all times.

   Detach the brake caliper and brake caliper anchor plate and secure to one side.

   - Remove and discard the brake caliper retaining bolts.

All vehicles

www.JagDocs.com

GETtheMANUALS.org

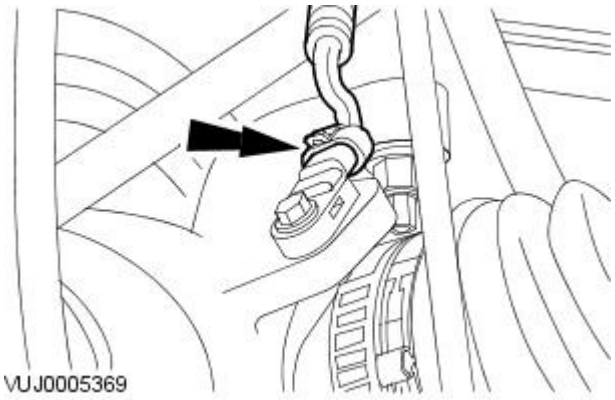


**7.** NOTE: Left-hand shown right-hand similar.

Disconnect the anti-lock brake system (ABS) sensor electrical connector.

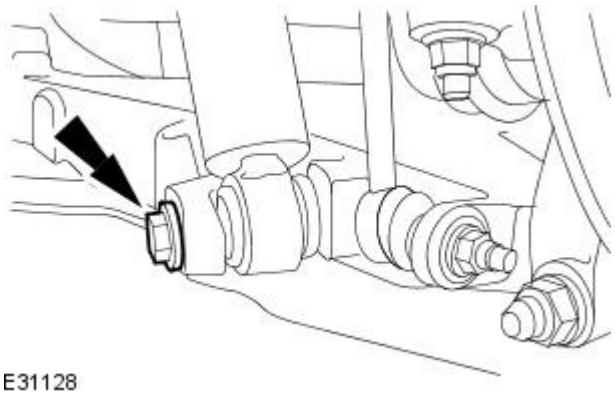


**8.** NOTE: Right-hand shown left-hand similar.

Detach the shock absorber and spring assembly from the lower arm.

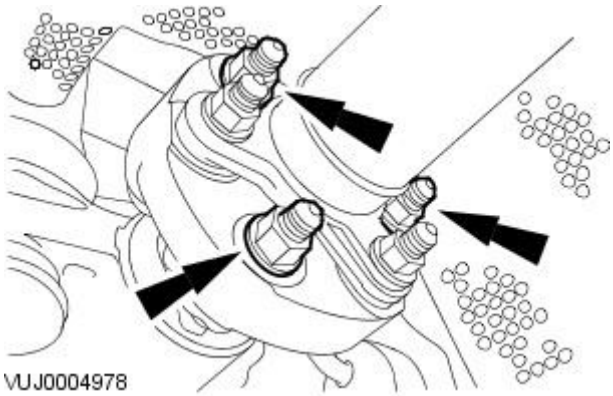


**9.** CAUTION: Under no circumstances must the flexible coupling (or its fixings) be loosened or removed from the driveshaft

Detach the driveshaft from the rear drive axle flange.

- Mark the position of the driveshaft in relation to the rear drive axle flange.
- Mark the position of the balance nut in relation to the rear drive axle flange (if fitted).
- Mark the position of each nut and bolt in relation to the rear drive axle flexible joint.

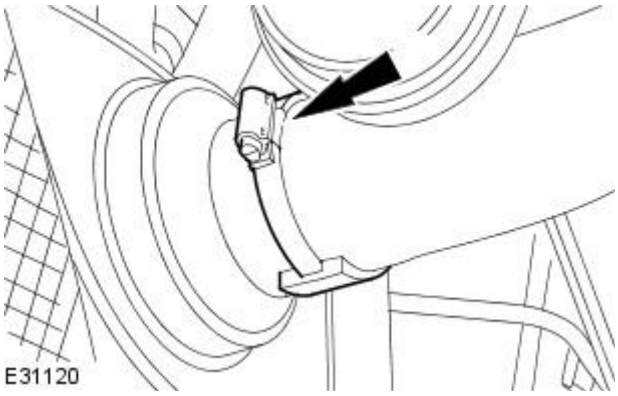


**10.** Detach the fuel filler pipe.

- Undo and reposition the hose clip.

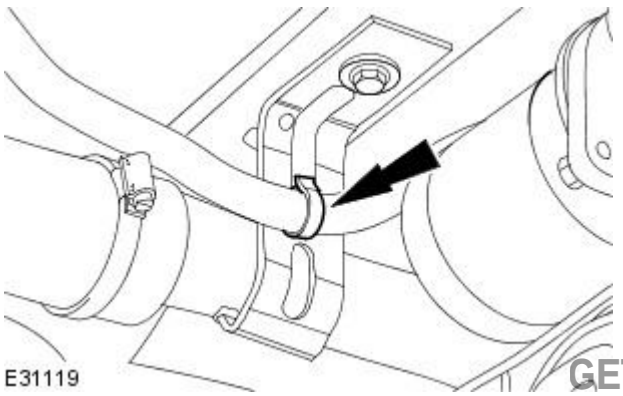


**11.** Detach the electric parking brake motor harness.

GETtheMANUALS.org

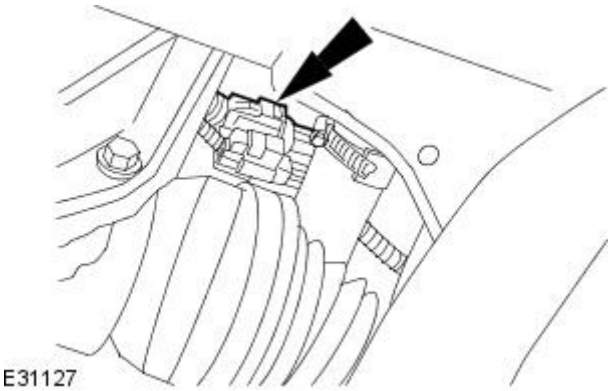


**12.** Disconnect the electric parking brake motor electrical connector.

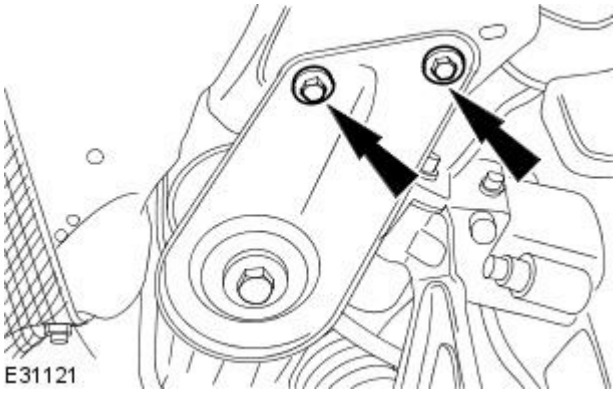


**13.** NOTE: Left-hand shown right-hand similar.

Remove the reinforcement plate retaining bolts.

**14.** Using the special tool, support the subframe.

**15.** NOTE: Left-hand shown right-hand similar.

Remove the subframe rear mount retaining bolt.

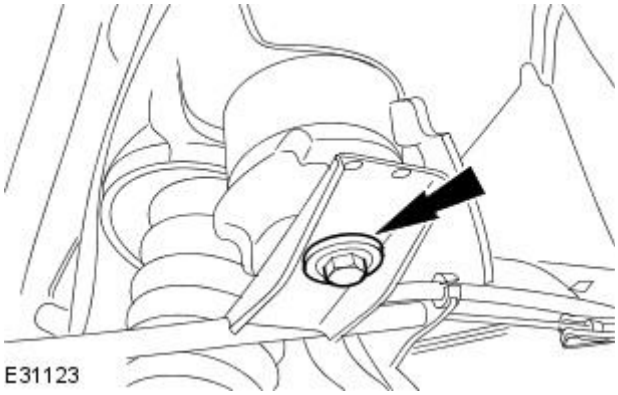


**16.** NOTE: Left-hand shown right-hand similar.

Remove the subframe front mount retaining bolt.

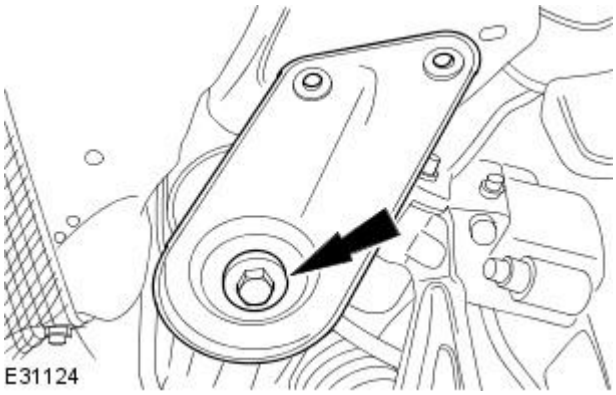


**17.** Lower the subframe.

GETtheMANUALS.org

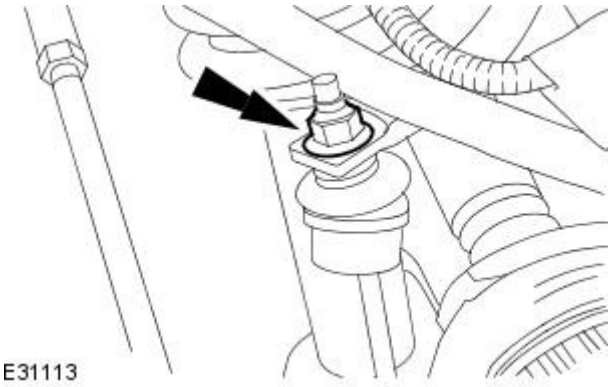


**18.** NOTE: Right-hand shown left-hand similar.

Remove the stabilizer bar link retaining nut.

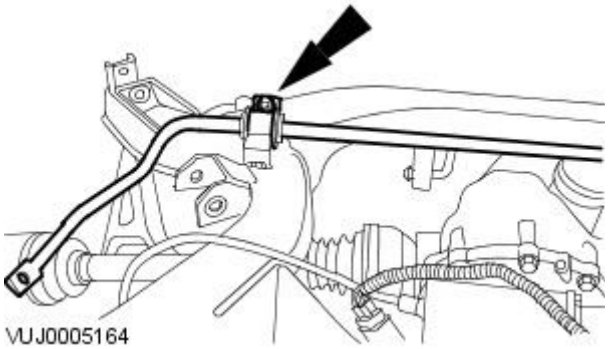


**19.** NOTE: Left-hand shown right-hand similar.

Remove the stabilizer bar.

## Installation

All vehicles

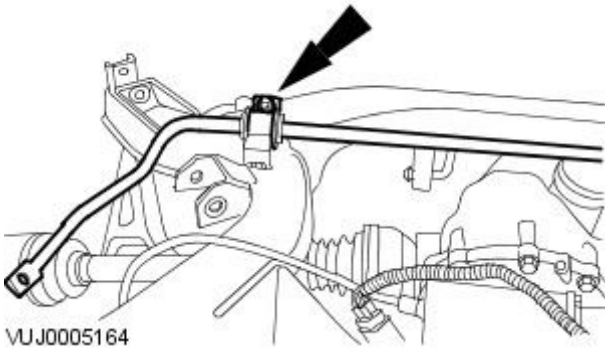


**1.** NOTE: Left-hand shown right-hand similar.

Install the stabilizer bar.

- Tighten to 55 Nm.

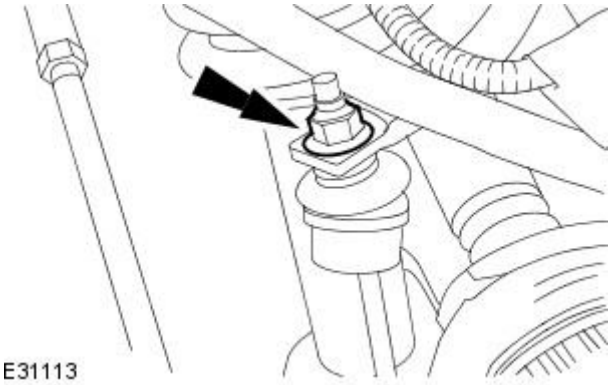


**2.** NOTE: Right-hand shown left-hand similar.

Install the stabilizer bar link retaining nut.

- Tighten to 48 Nm.

**3.** Reposition the subframe.

GETtheMANUALS.org

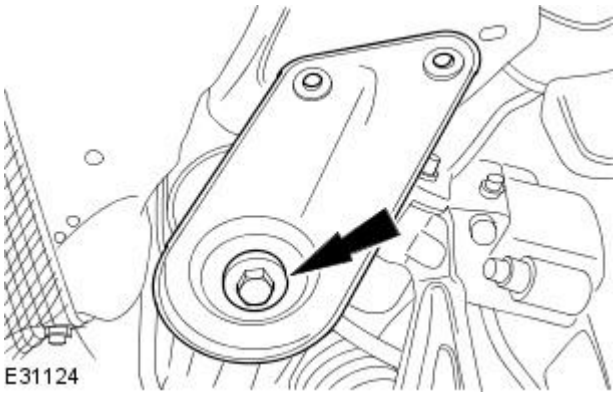


**4.** NOTE: Left-hand shown right-hand similar.

Install the subframe front mount retaining bolt.

- Tighten to 125 Nm.

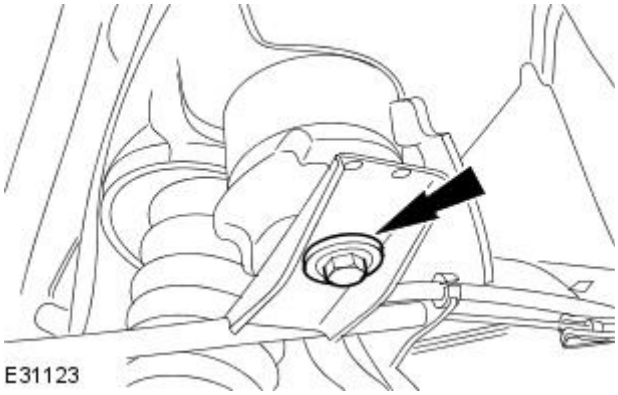


**5.** NOTE: Left-hand shown right-hand similar.

Install the subframe rear mount retaining bolt.

- Tighten to 125 Nm.

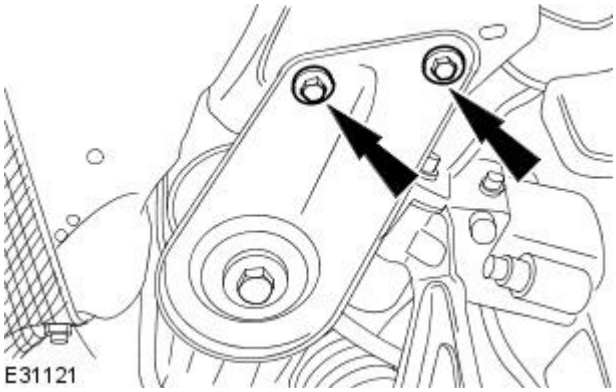


**6.** NOTE: Left-hand shown right-hand similar.

Install the reinforcement plate retaining bolts.

- Tighten to 48 Nm.

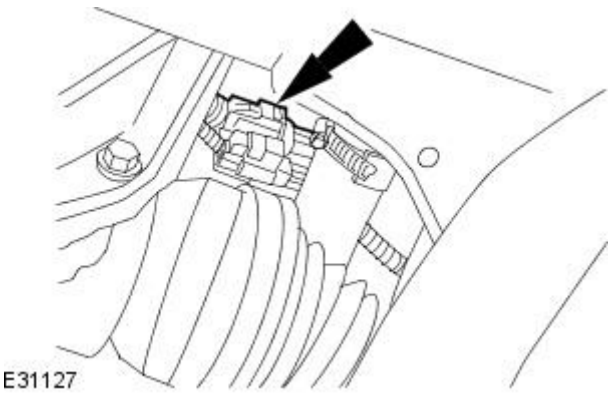


**7.** Connect the electric parking brake motor electrical connector.

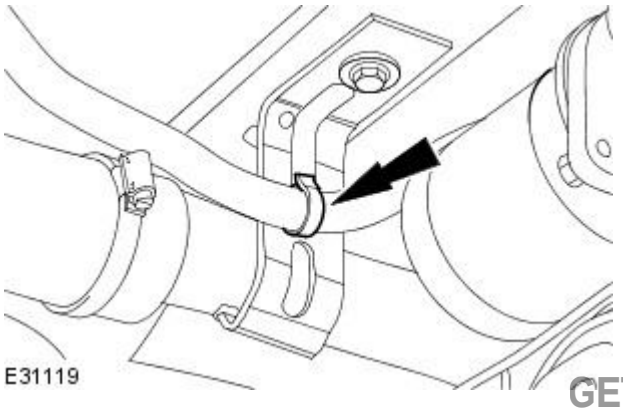


**8.** Attach the electric parking brake motor harness.

GETtheMANUALS.org

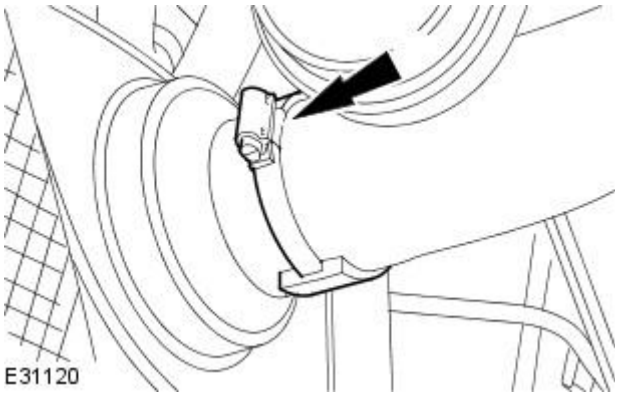


**9.** Attach the fuel filler pipe.

- Reposition and tighten hose clip.

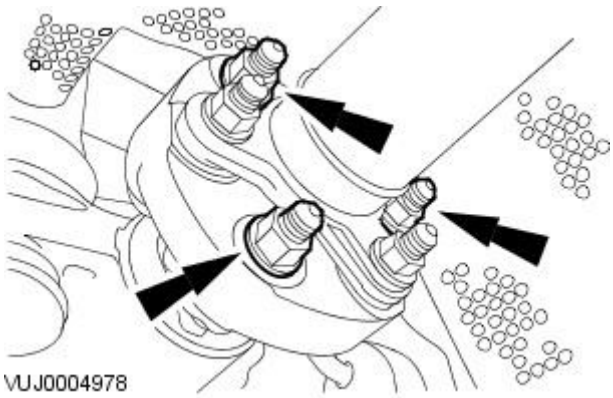


**10.** Attach the driveshaft to the rear drive axle flange.

- Tighten to 88 Nm.

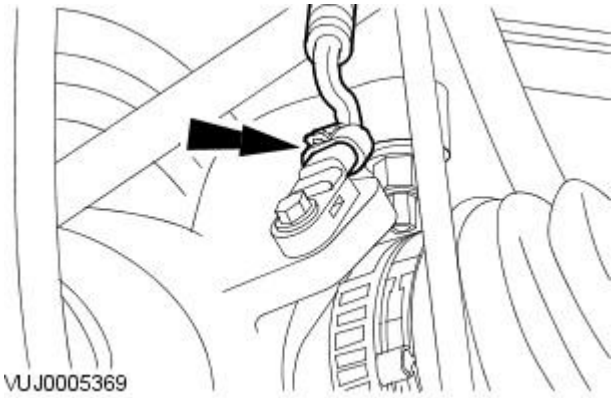


**11.** NOTE: Left-hand shown right-hand similar.

Connect the ABS sensor electrical connector.

Vehicles without Brembo brakes

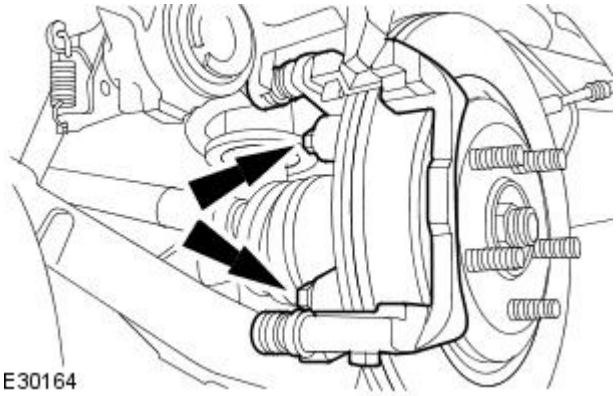


**12.** Attach the brake caliper and brake caliper anchor plate.

- Install new brake caliper retaining bolts.
- Tighten to 103 Nm.

**13.** Install the brake pads.
For additional information, refer to Section 206-04 Rear Disc Brake.

Vehicles with Brembo brakes

GETtheMANUALS.org

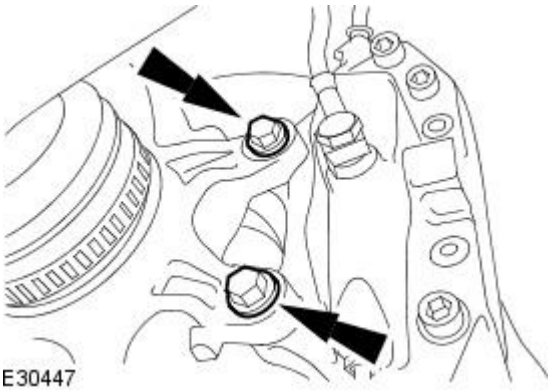


**14.** Attach the brake caliper.

- Install new brake caliper retaining bolts.
- Tighten to 70 Nm.

All vehicles

**15.** Install the front muffler.
For additional information, refer to Section 309-00 Exhaust System.

**16.** Install both the upper arms.
For additional information, refer to Upper Arm in this section.

**17.** Fill the right-hand fuel tank saddle.
For additional information, refer to Section 310-00 Fuel System - General Information.

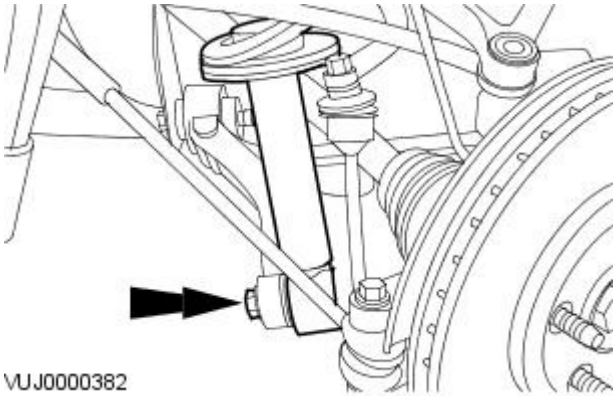


**18.** CAUTION: The final tightening of the rear suspension components must be carried out with the vehicle on its wheels.

Tighten to 133 Nm.

**19.** Check the wheel alignment and adjust as necessary.
For additional information, refer to Section 204-00 Suspension System - General Information.

**20.** Carry out the rear subframe alignment procedure.
For additional information, refer to Section 502-00 Uni-Body, Subframe and Mounting System.

GETtheMANUALS.org

# Rear Suspension - Upper Arm

Removal and Installation

## Removal

1. Remove the wheel and tire.
   For additional information, refer to Section 204-04 Wheels and Tires.
2. Detach the high intensity discharge (HID) sensor link rod.

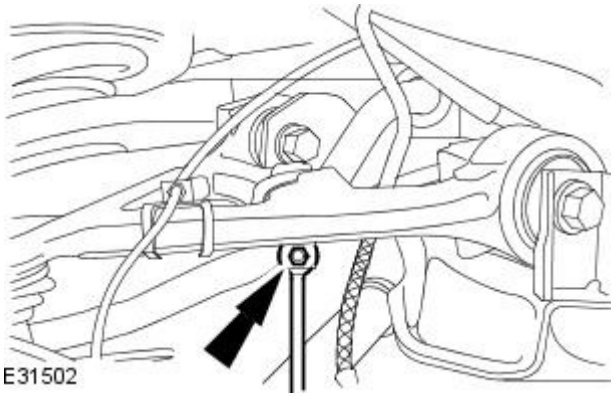


3. Detach the anti-lock brake system (ABS) sensor wiring harness.

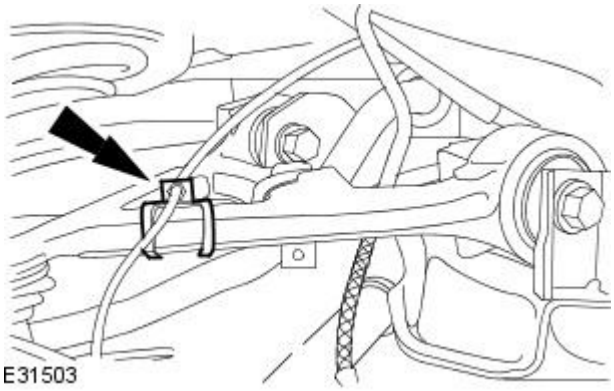


4. Detach the upper arm from the wheel knuckle.

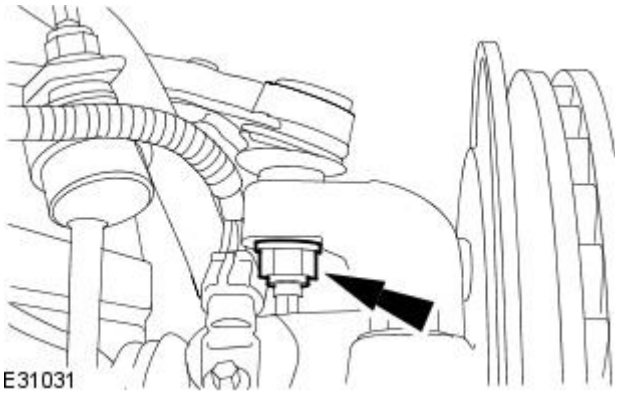


5. Remove the upper arm.

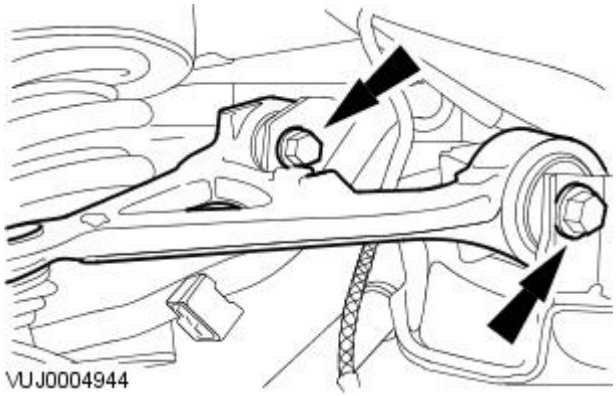


## Installation

GETtheMANUALS.org

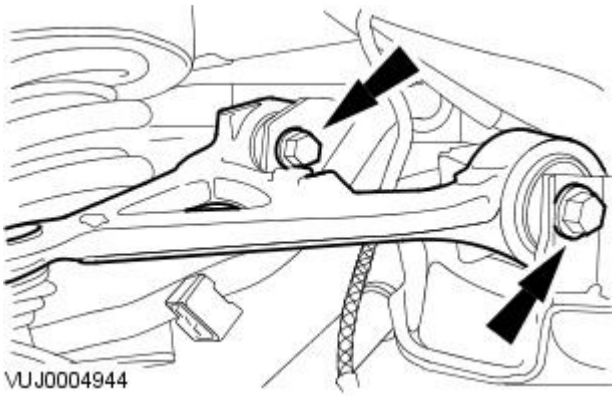


**1.** Install the upper arm.

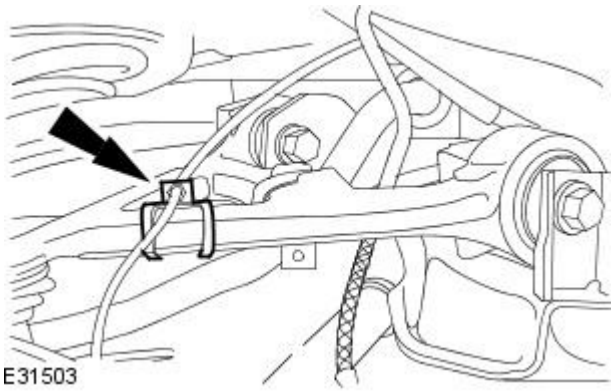


**2.** Attach the anti-lock brake system (ABS) sensor wiring harness.

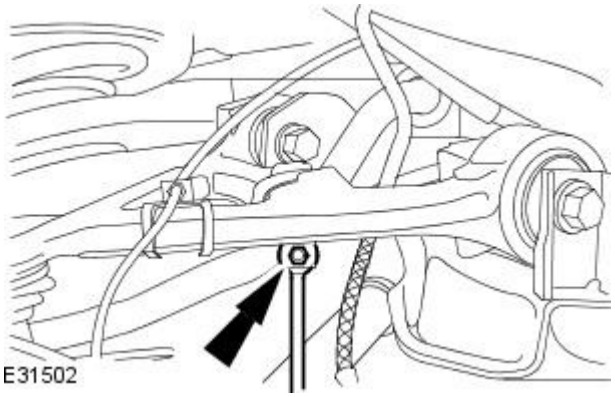


**3.** Attach the high intensity discharge (HID) sensor link rod.

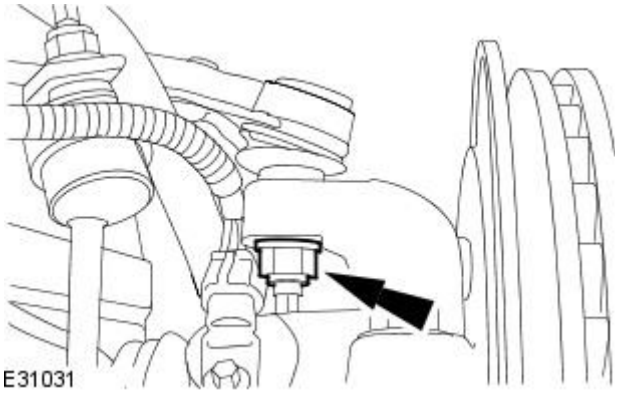


**4.** Attach the upper arm to the wheel knuckle.

**5.** Install the wheel and tire.
For additional information, refer to Section 204-04 Wheels and Tires.

**6.** Lower the vehicle.

GETtheMANUALS.org

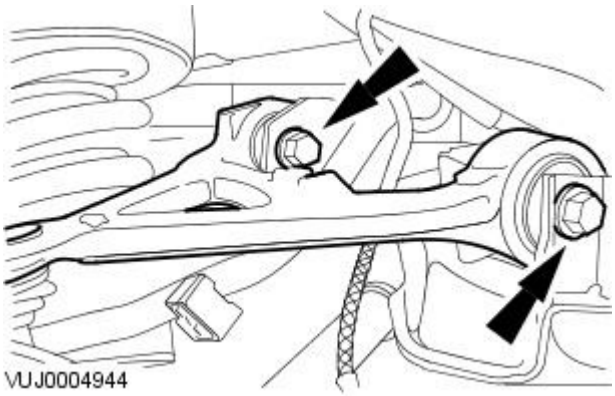


**7.** CAUTION: The final tightening of the rear suspension components must be carried out with the vehicle on its wheels.

Tighten to 98 Nm.

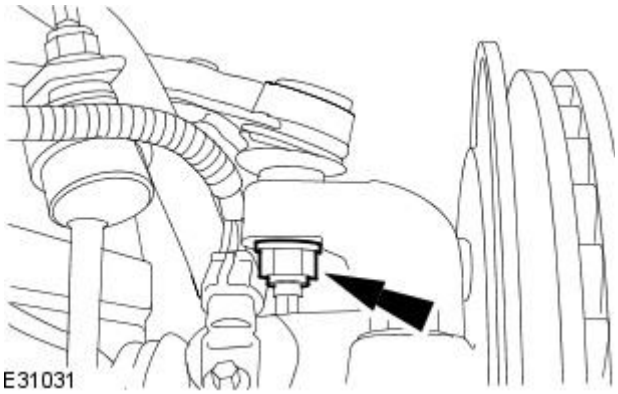


**8.** CAUTION: The final tightening of the rear suspension components must be carried out with the vehicle on its wheels.

Tighten to 90 Nm.

**9.** Check and adjust the wheel alignment as necessary.
For additional information, refer to Section 204-00 Suspension System - General Information.

GETtheMANUALS.org

# Rear Suspension - Rear Wheel Bearing

Removal and Installation

| Special Tool(s) | |
|---|---|
| 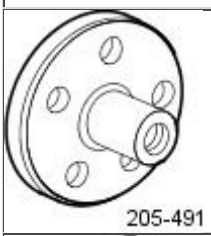 205-491 | Hub puller<br>205-491 |
| 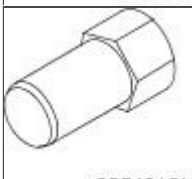 20549101 | Adaptor nuts<br>205-491-01 |
| 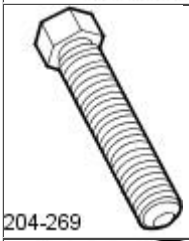 204-269 | Flange remover forcing screw<br>204-269 |
| 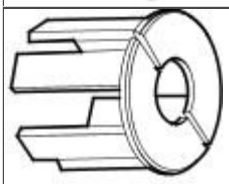 204-249 | Rear hub support tool<br>204-249 |
| 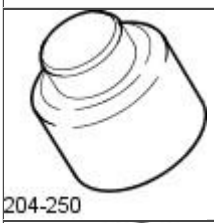 204-250 | Rear hub bearing removal tool<br>204-250 |
| 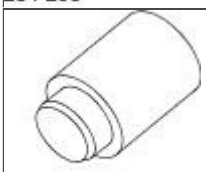 204193 | Front hub remover<br>204-193 |
| 204-252 | Bearing support<br>204-252 |

## Removal

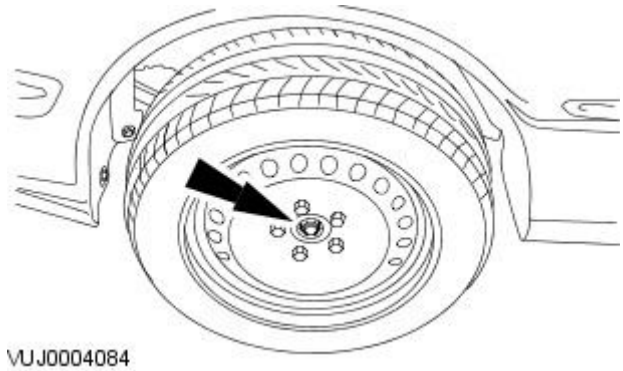


**1.** Loosen the wheel hub nut.

**2.** Remove the brake disc. For additional information, refer to: (206-04 Rear Disc Brake).

GETtheMANUAL.org

Brake Disc - Vehicles With: Standard Brakes, VIN Range: M45255->N52047 (Removal and Installation),
Brake Disc - Vehicles With: High Performance Brakes, VIN Range: M45255->N52047 (Removal and Installation),
Brake Disc - VIN Range: N52048->N99999 (Removal and Installation).

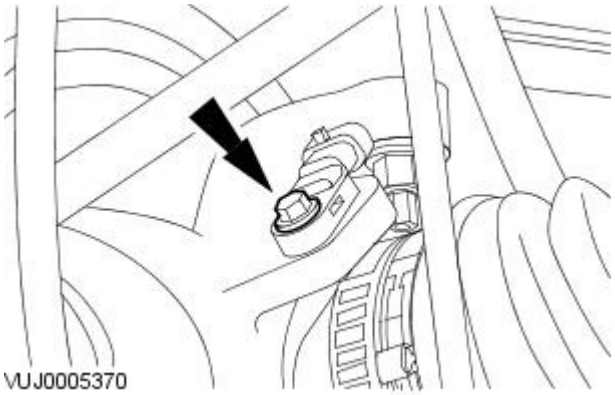


**3.** Detach the anti-lock brake system (ABS) sensor.

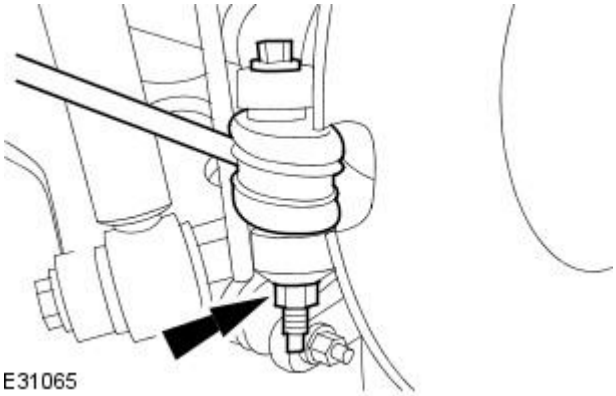


**4.** Detach the outer tie-rod.

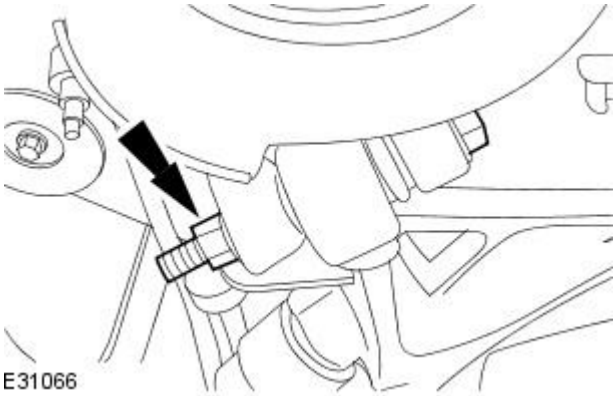


**5.** Detach the lower arm from the wheel knuckle.

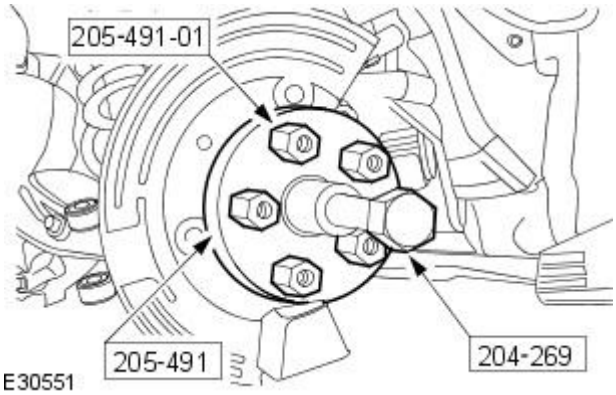


**6.** Remove the wheel hub nut.

**7.** Using the special tools, detach the halfshaft.

GETtheMANUALS.org

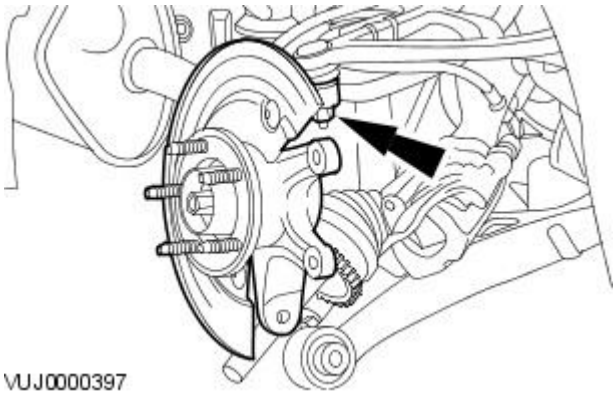


**8.** Remove the wheel knuckle assembly.

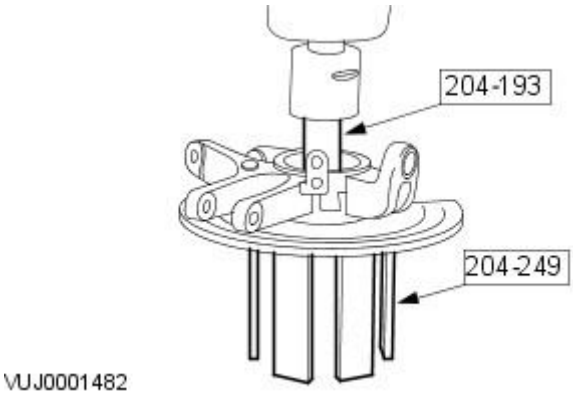


**9.** Using the special tools, remove the wheel hub from the bearing.

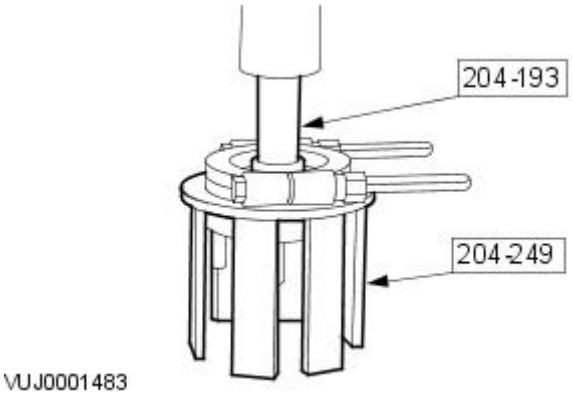


**10.** Using the special tools, remove the inner bearing race from the hub.

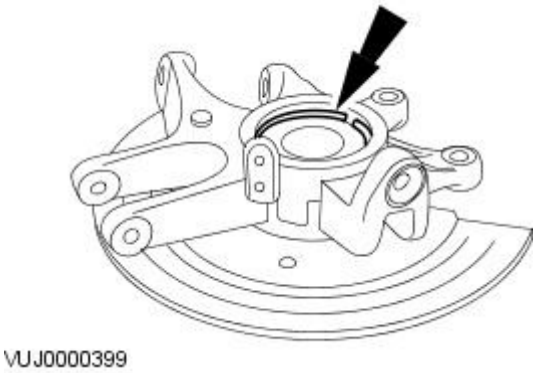


**11.** Remove the circlip.

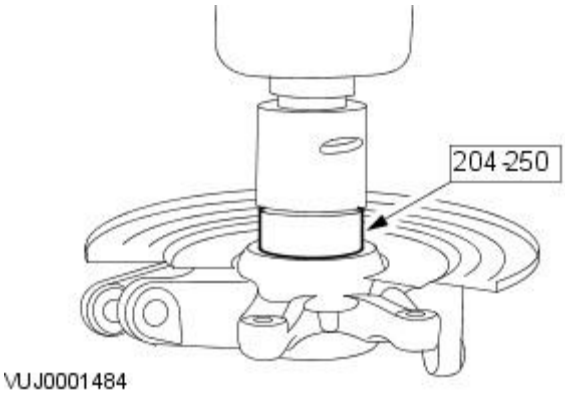


**12.** Using the special tools, remove the bearing from the wheel knuckle.

GETtheMANUALS.org

## Installation

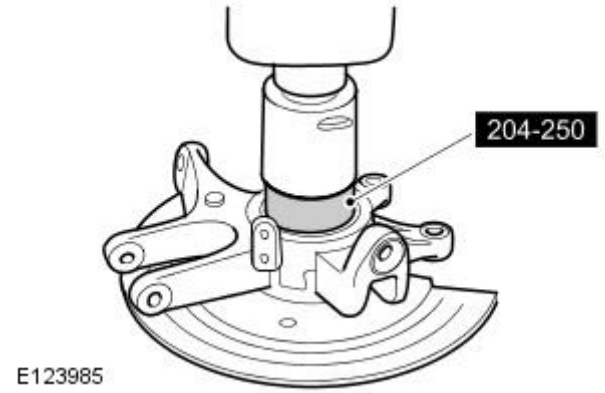


**1.** NOTE: The final tightening of the rear suspension components must be carried out with the vehicle on its wheels.

Using the special tools, install the bearing to the wheel knuckle.

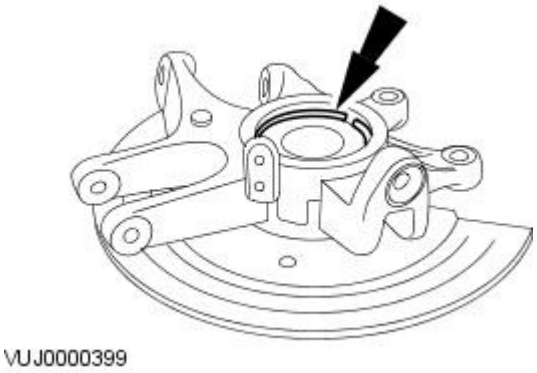


**2.** Install the circlip.

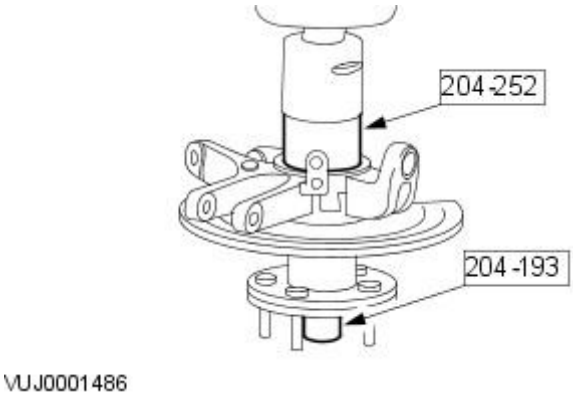


**3.** Using the special tools, install the wheel hub to the bearing.

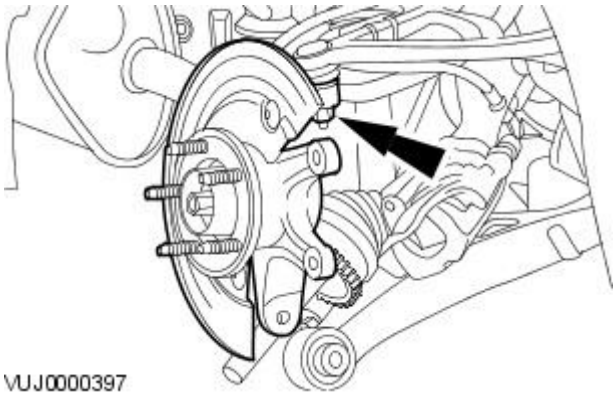


**4.** Install the wheel knuckle assembly.

- Tighten to 90 Nm.

GETtheMANUALS.org

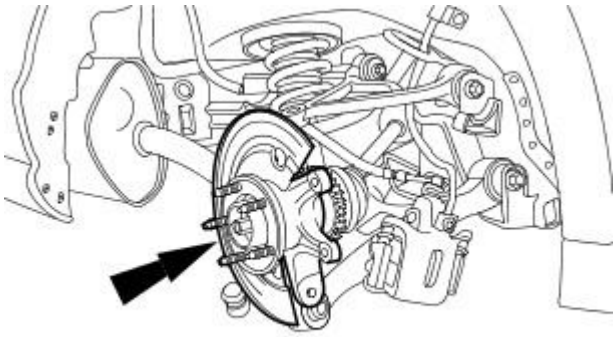

VUJ0001487

**5.** NOTE: Using the old wheel hub nut tighten to 150 Nm.

Attach the wheel knuckle to the halfshaft.

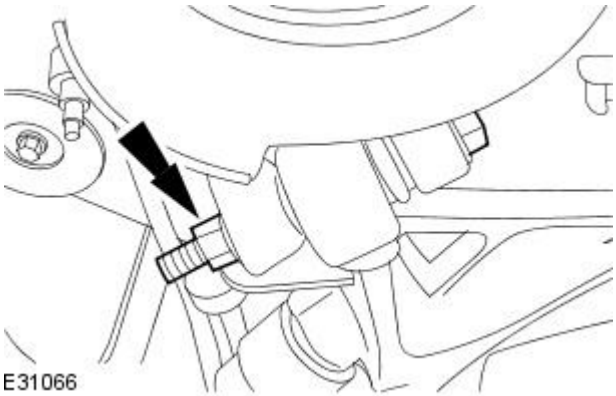

E31066

**6.** Install the lower arm to the wheel knuckle retaining bolt.

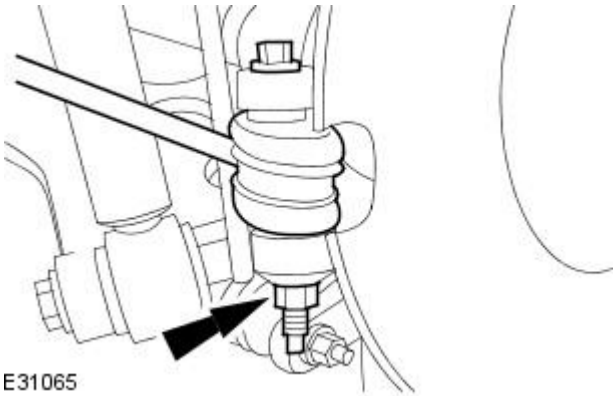

E31065

**7.** Install the outer tie rod retaining bolt..

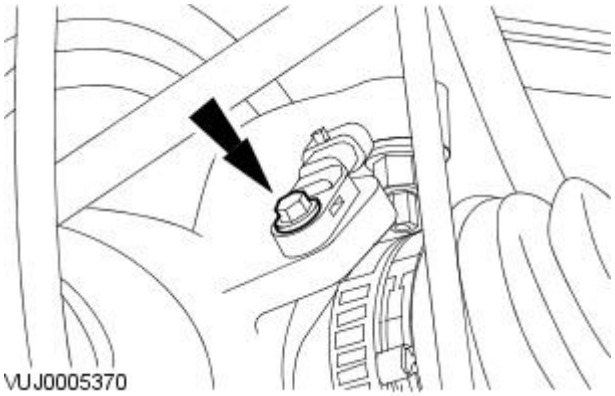

VUJ0005370

**8.** Install the ABS sensor.

- Tighten to 10 Nm.

**9.** Install the brake disc. For additional information, refer to: (206-04 Rear Disc Brake)

Brake Disc - Vehicles With: Standard Brakes, VIN Range: M45255->N52047 (Removal and Installation),
Brake Disc - Vehicles With: High Performance Brakes, VIN Range: M45255->N52047 (Removal and Installation),
Brake Disc - VIN Range: N52048->N99999 (Removal and Installation).

**10.** Lower the vehicle.

GETtheMANUALS.org

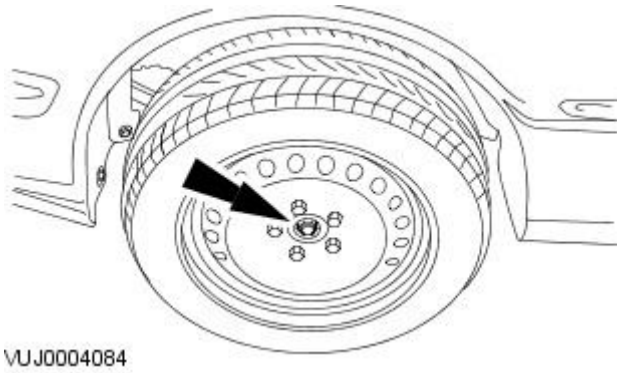


**11.** NOTE: Remove and discard the old wheel hub nut, install a new wheel hub nut.

Tighten the wheel hub nut.

- Tighten to 300 Nm.

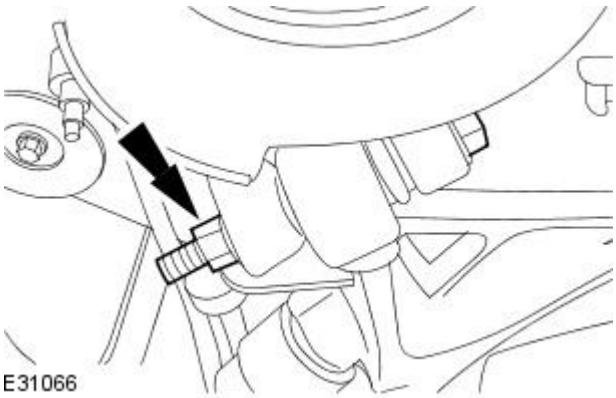


**12.** CAUTION: The final tightening of the rear suspension components must be carried out with the vehicle on its wheels.

Tighten to 150 Nm.

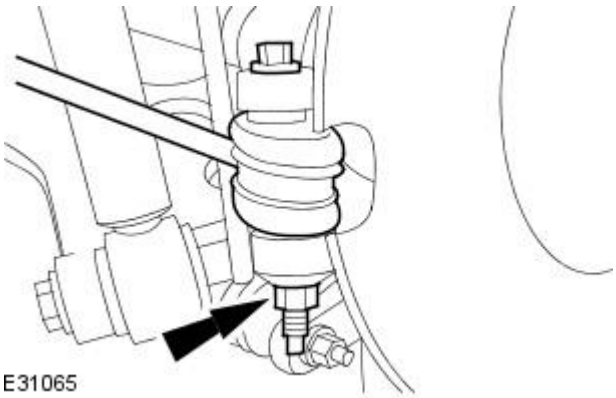


**13.** CAUTION: The final tightening of the rear suspension components must be carried out with the vehicle on its wheels.

Tighten to 55 Nm.

GETtheMANUALS.org

# Rear Suspension - Shock Absorber and Spring Assembly

Disassembly and Assembly

| Special Tool(s) | |
|---|---|
| 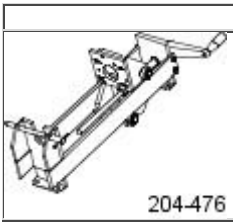 204-476 | Compressor, Coil Spring<br><br>204-476 |

## Disassembly

**1.** Remove the shock absorber and spring assembly.
For additional information, refer to Shock Absorber and Spring Assembly in this section.

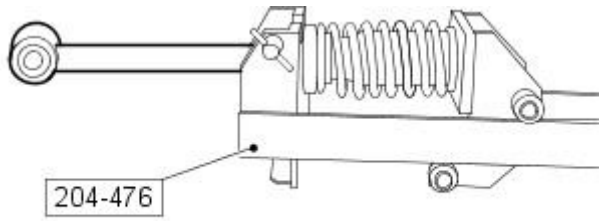


E31044

**2.** WARNING: Make sure the shock absorber is secured by fully inserting the locking pin in to the special tool. Failure to follow these instructions may result in personal injury.

Install the shock absorber and spring assembly to the special tool as shown.

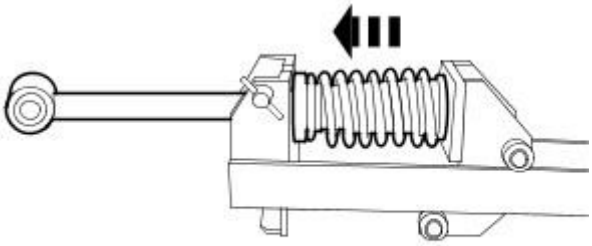

E31046

**3.** WARNING: AS THE SPRING IS UNDER EXTREME TENSION CARE MUST BE TAKEN AT ALL TIMES. FAILURE TO FOLLOW THESE INSTRUCTIONS MAY RESULT IN PERSONAL INJURY.

Clamp the road spring.

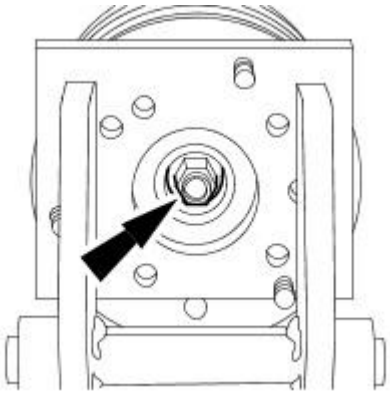

E43414

**4.** Remove the shock absorber retaining nut.

- Remove and discard the retaining nut.

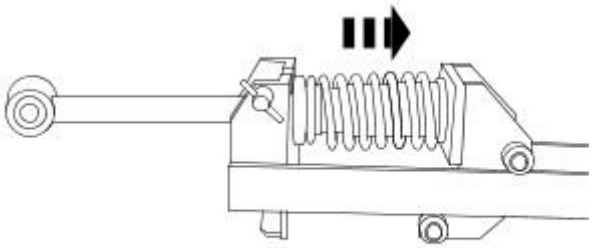

E31045

**5.** Release the road spring.

GETtheMANUALS.org

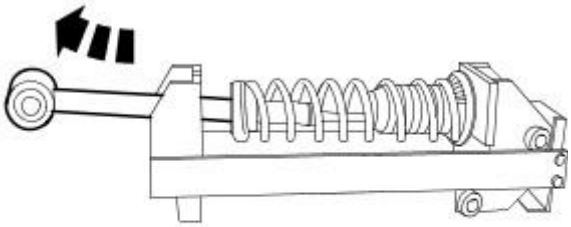

E31047

**6.** Remove the shock absorber.

## Assembly

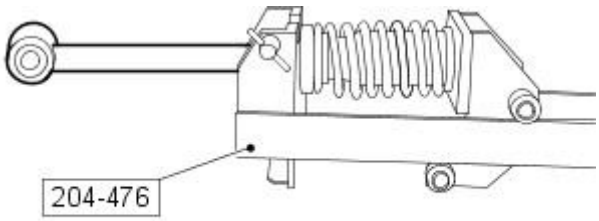


E31044

**1.** CAUTION: Make sure the spring ends butt correctly against the spring seats.

Install the shock absorber and spring assembly to the special tool.

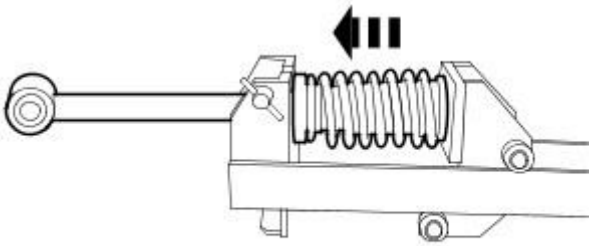

E31046

**2.** WARNING: AS THE SPRING IS UNDER EXTREME TENSION CARE MUST BE TAKEN AT ALL TIMES. FAILURE TO FOLLOW THESE INSTRUCTIONS MAY RESULT IN PERSONAL INJURY.

Clamp the road spring.

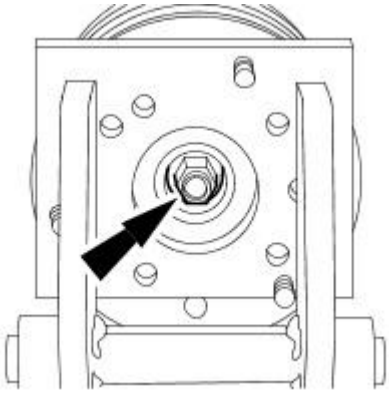

E43414

**3.** Vehicles without adaptive damping.

- Install a new retaining nut.
- Tighten to 50 Nm.

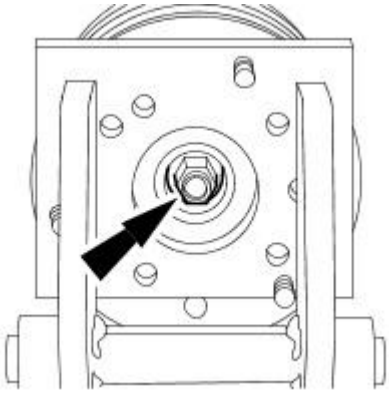

E43414

**4.** Vehicles with adaptive damping.

- Install a new retaining nut.
- Tighten to 27 Nm.

GETtheMANUALS.org

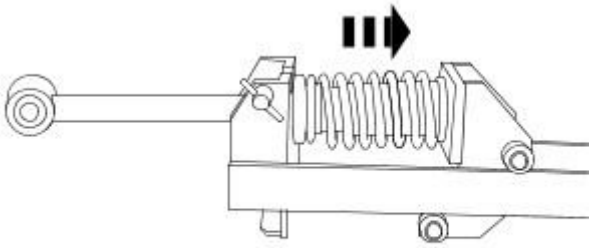

E31045

**5.** Release the road spring.

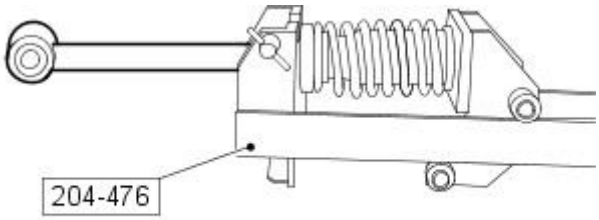


E31044

**6.** Remove the shock absorber and spring assembly from the special tool.

GETtheMANUALS.org

# Wheels and Tires -

**Torque Specifications**

| Description | Nm | lb/ft | lb/in |
|---|---|---|---|
| Wheel nuts | 125 | 92 | - |

**Tire Pressures for Vehicles without supercharger - Vehicles built up to 01/2004**

| Tire Size | | Normal Load (up to 4 occupants) any speed | Full Load (5 occupants and luggage) any speed |
|---|---|---|---|
| 205/60 R 16 | Front | 2.20 bar (32 lbf/in²) | 2.70 bar (39 lbf/in²) |
| | Rear | 2.20 bar (32 lbf/in²) | 2.90 bar (41 lbf/in²) |
| 225/55 R 16 | Front | 2.10 bar (31 lbf/in²) | 2.60 bar (38 lbf/in²) |
| | Rear | 2.10 bar (31 lbf/in²) | 2.60 bar (38 lbf/in²) |
| 235/50 R 17 | Front | 2.10 bar (31 lbf/in²) | 2.60 bar (38 lbf/in²) |
| | Rear | 2.10 bar (31 lbf/in²) | 2.60 bar (38 lbf/in²) |
| 245/40 R 18 | Front | 2.10 bar (31 lbf/in²) | 2.40 bar (35 lbf/in²) |
| | Rear | 2.10 bar (31 lbf/in²) | 2.40 bar (35 lbf/in²) |
| T145/80R 16 (Temporary-use spare wheel) | Front | 4.20 bar (60 lbf/in²) | 4.20 bar (60 lbf/in²) |
| | Rear | 4.20 bar (60 lbf/in²) | 4.20 bar (60 lbf/in²) |
| T115/85R 18 (Temporary-use spare wheel) | Front | 4.20 bar (60 lbf/in²) | 4.20 bar (60 lbf/in²) |
| | Rear | 4.20 bar (60 lbf/in²) | 4.20 bar (60 lbf/in²) |

**Tire Pressures for Vehicles with supercharger - Vehicles built up to 01/2004**

| Tire Size | | Normal (speeds above 160 km/h - 100 mph) | Comfort (speeds below 160 km/h - 100 mph) |
|---|---|---|---|
| 245/40 R 18 | Front | 2.50 bar (36 lbf/in²) | 1.90 bar (28 lbf/in²) |
| | Rear | - | - |
| 275/35 R 18 | Front | - | - |
| | Rear | 2.80 bar (40 lbf/in²) | 2.20 bar (32 lbf/in²) |
| T115/85R 18 (Temporary-use spare wheel) | Front | 4.20 bar (60 lbf/in²) | 4.20 bar (60 lbf/in²) |
| | Rear | 4.20 bar (60 lbf/in²) | 4.20 bar (60 lbf/in²) |

**Wheel Specification - Vehicles built up to 01/2004**

| Wheel Type | Wheel Size |
|---|---|
| Helios | 6.5 x 16 |
| Artemis | 7.5 x 16 |
| Spirit | 7.5 x 16 |
| Kronos | 7.5 x 17 |
| Herakles | 7.5 x 17 |
| Sport | 7.5 x 17 |
| Zeus | 8 x 18 |
| Zeus | 9.5 x 18 |

**Tire Specification - Vehicles built up to 01/2004**

| Wheel Specification | Tire Specification | Tire Unique Identifier | Vehicle / Chassis Specification |
|---|---|---|---|
| 6.5 inch | 205/60VR 16 92V Pirelli P7 | size/designation | Vehicles with 2.5L engine |
| 7.5 inch x 16 inch | 225/55ZR 16 95W Pirelli P6000 | J marked | Vehicles with 2.5L or 3.0L engine |
| | 225/55R 16 95H Bridgestone Turanza EL42* | size/designation | Vehicles with 3.0L engine |
| | 225/55R 16 95H Continental Touring Contact CH95 | | |
| 7.5 inch x 17 inch | 235/50ZR 17 96Y Pirelli P6000 | size/designation | Vehicles without supercharger |
| | 235/50R 17 96H Michelin MXM4* | size/designation | Vehicles without supercharger |
| | 235/50ZR 17 96W Pirelli P-Zero | size/designation | Vehicles without supercharger |
| 8 inch x 18 inch | 245/40ZR 18 97Y Pirelli P-Zero | size/designation | Vehicles without supercharger |
| | 245/40ZR 18 Continental CSC | J marked | Vehicles with supercharger |
| 9.5 inch x 18 inch | 275/35ZR 18 Continental CSC | J marked | Vehicles with supercharger |
| 4.5 inch x 16 inch | T145/80R 16 (Temporary-use spare wheel) | size/designation | Vehicles with 2.5L or 3.0L engine and non-sport chassis |
| 4 inch x 18 inch | T115/85R 18 (Temporary-use spare wheel) | size/designation | Vehicles with 4.2L engine and all sport chassis |

- Only fitted to USA and Canadian cars, limited to 195 km/h (121 mph).

Note: Using an unspecified wheel size may affect the calibration of the speedometer.

**Tire Pressures for Vehicles without supercharger - Vehicles built 02/2004 onwards**

| Tire Size | | Normal Load (up to 4 occupants) any speed | Full Load (5 occupants and luggage) any speed |
|---|---|---|---|
| 205/60 R 16 92V P7 | Front | 2.20 bar (32 lbf/in²) | 2.60 bar (38 lbf/in²) |
| | Rear | 2.20 bar (32 lbf/in²) | 2.90 bar (42 lbf/in²) |
| 235/50 R 17 96Y | Front | 2.10 bar (31 lbf/in²) | 2.60 bar (38 lbf/in²) |
| | Rear | 2.10 bar (31 lbf/in²) | 2.60 bar (38 lbf/in²) |
| 235/50 R 17 96H | Front | 2.10 bar (31 lbf/in²) | 2.20 bar (32 lbf/in²) |
| | Rear | 2.10 bar (31 lbf/in²) | 2.20 bar (32 lbf/in²) |
| 245/40 R 18 97Y | Front | 2.10 bar (31 lbf/in²) | 2.60 bar (38 lbf/in²) |
| | Rear | 2.10 bar (31 lbf/in²) | 2.60 bar (38 lbf/in²) |
| 245/40 R 18 93H | Front | 2.10 bar (31 lbf/in²) | 2.40 bar (35 lbf/in²) |
| | Rear | 2.10 bar (31 lbf/in²) | 2.40 bar (35 lbf/in²) |
| T145/80R 16 (Temporary-use spare wheel) | Front | 4.20 bar (60 lbf/in²) | 4.20 bar (60 lbf/in²) |
| | Rear | 4.20 bar (60 lbf/in²) | 4.20 bar (60 lbf/in²) |
| T115/85R 18 (Temporary-use spare wheel) | Front | 4.20 bar (60 lbf/in²) | 4.20 bar (60 lbf/in²) |
| | Rear | 4.20 bar (60 lbf/in²) | 4.20 bar (60 lbf/in²) |

**Tire Pressures for Vehicles with supercharger - Vehicles built 02/2004 onwards**

GETtheMANUALS.org

| Tire Size | Normal (speeds above 160 km/h - 100 mph) | Comfort (speeds below 160 km/h - 100 mph) |
|---|---|---|

| Tire Size | | Normal (speeds above 160 km/h - 100 mph) | Comfort (speeds below 160 km/h - 100 mph) |
|---|---|---|---|
| 245/40 R 18 | Front | 2.80 bar (40 lbf/in²) | 2.10 bar (30 lbf/in²) |
| | Rear | - | - |
| 275/35 R 18 | Front | - | - |
| | Rear | 2.80 bar (40 lbf/in²) | 2.20 bar (32 lbf/in²) |
| T115/85R 18 (Temporary-use spare wheel) | Front | 4.20 bar (60 lbf/in²) | 4.20 bar (60 lbf/in²) |
| | Rear | 4.20 bar (60 lbf/in²) | 4.20 bar (60 lbf/in²) |

**Wheel Specification - Vehicles built 02/2004 onwards**

| Wheel Type | Wheel Size |
|---|---|
| Helios | 6.5 x 16 |
| Kronos | 7.5 x 17 |
| Juno | 7.5 x 17 |
| Aurora | 7.5 x 17 |
| Triton | 8 x 18 |
| Mercury | 8 x 18 |
| Vulcan | 8 x 18 |
| Vulcan | 9.5 x 18 |
| Valencia | 8 x 18 |
| Barcelona | 8 x 19 |
| Barcelona | 9.5 x 19 |

**Tire Specification - Vehicles built 02/2004 onwards**

| Wheel Specification | Tire Specification | Tire Unique Identifier | Vehicle / Chassis Specification |
|---|---|---|---|
| 6.5 inch | 205/60 R 16 92V Pirelli P7 | size/designation | Vehicles with 2.5L engine |
| 7.5 inch x 17 inch | 235/50ZR 17 96Y Pirelli P6000 | size/designation | Vehicles without supercharger |
| | 235/50R 17 96H Michelin MXM4* | size/designation | Vehicles without supercharger |
| | 235/50ZR 17 96W Pirelli P-Zero | size/designation | Vehicles without supercharger |
| 8 inch x 18 inch | 245/40ZR 18 97Y Pirelli P-Zero | size/designation | Vehicles without supercharger |
| | 245/40 R 18 93H Continental Procontact | | |
| | 245/40ZR 18 Continental CSC | J marked | Vehicles with supercharger |
| 9.5 inch x 18 inch | 275/35ZR 18 Continental CSC | J marked | Vehicles with supercharger |
| 4.5 inch x 16 inch | T145/80R 16 (Temporary-use spare wheel) | size/designation | Vehicles with 2.5L or 3.0L engine and non-sport chassis |
| 4 inch x 18 inch | T115/85R 18 (Temporary-use spare wheel) | size/designation | Vehicles with 4.2L engine and all sports chassis |
| 8 inch x 19 inch | 245/35 ZR 19 93Y Pirelli Rosso | size/designation | Vehicles with supercharger |
| 9.5 x 19 inch | 275/35 ZR 19 96Y Pirelli Rosso | size/designation | Vehicles with supercharger |

- Only fitted to USA and Canadian cars, limited to 195 km/h (121 mph).

Note: Using an unspecified wheel size may affect the calibration of the speedometer.

GETtheMANUALS.org

# Wheels and Tires - Wheels and Tires

Description and Operation

• WARNINGS:

Do not mix different types of tires on the same vehicle such as radial, bias or bias belted tires except in emergencies (temporary spare usage). Failure to follow these instructions may result in personal injury.

Never run the engine with one wheel off the ground, for example when changing a wheel. The wheel resting on the ground may cause the vehicle to move. Failure to follow these instructions may result in personal injury.

Aftermarket aerosol tire sealants are extremely flammable. Always question the customer to make sure these products have not been used. Failure to follow these instructions may result in personal injury.

Always wear safety goggles or a face shield when performing any work with wheel and tire assemblies. Failure to follow these instructions may result in personal injury.

Retighten the wheel nuts at 800 km (500 miles) after any wheel change or anytime the wheel nuts are loosened. Failure to follow these instructions may result in personal injury.

Failure to retighten the wheel nuts at the specified mileage could cause the wheels to come become detached while the vehicle is in motion. Failure to follow these instructions may result in personal injury.

Each individual axle, wheel and tire has its own maximum weight or tire inflation rating. Do not overload or over-inflate beyond the capacity of the lowest rated components of the system. Failure to follow these instructions may result in personal injury.

When changing a wheel, make sure that the vehicle cannot move. Always apply the parking brake and select the transmission park position. Failure to follow these instructions may result in personal injury.

Reduce air pressure as much as possible by pushing the valve core plunger in before removing the valve core. Failure to follow these instructions may result in personal injury.

CAUTION: Do not clean aluminium wheels with steel wool, abrasive type cleaners or detergents. Failure to follow these instructions may result in damage to the vehicle.

Vehicles built up to 01/2004

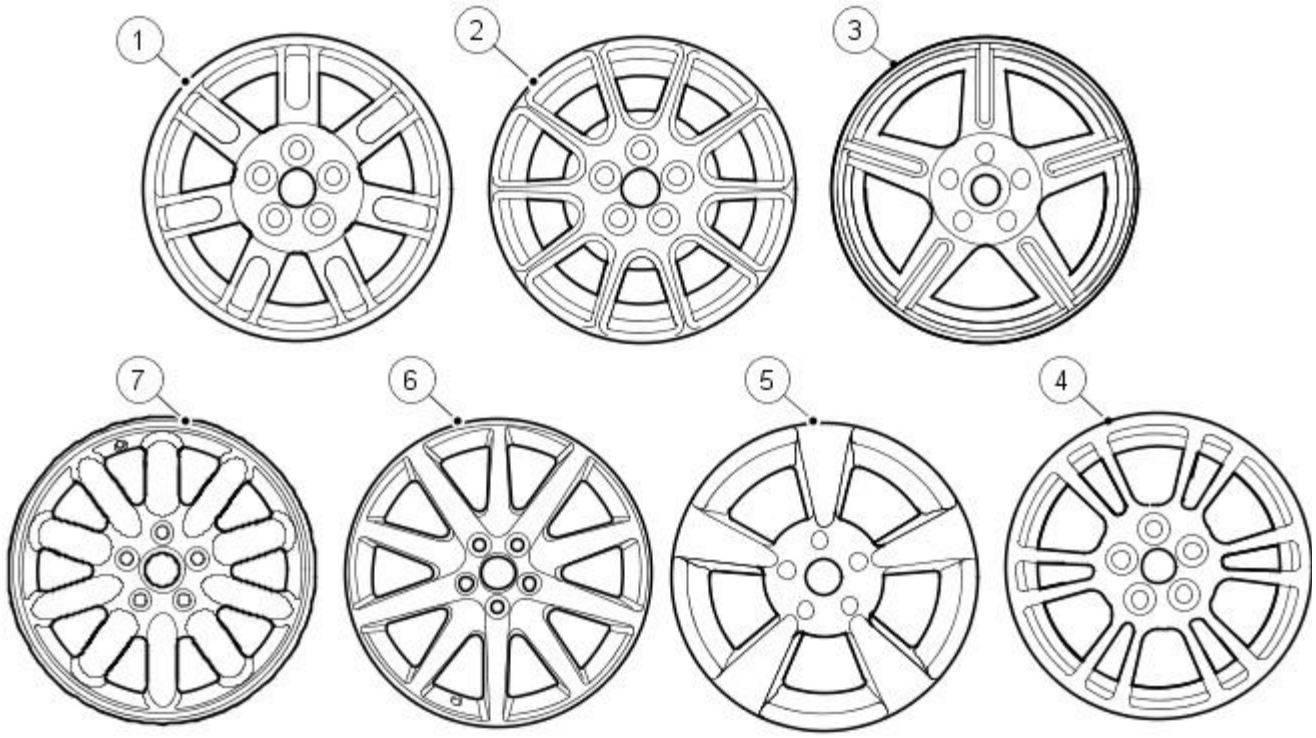


E30206

| Item | Part Number | Description |
|---|---|---|
| 1 | — | Artemis |
| 2 | — | Helios |
| 3 | — | Zeus |
| 4 | — | Kronos |
| 5 | — | Herakles |
| 6 | — | Sport |
| 7 | — | Spirit |

GETtheMANUALS.org

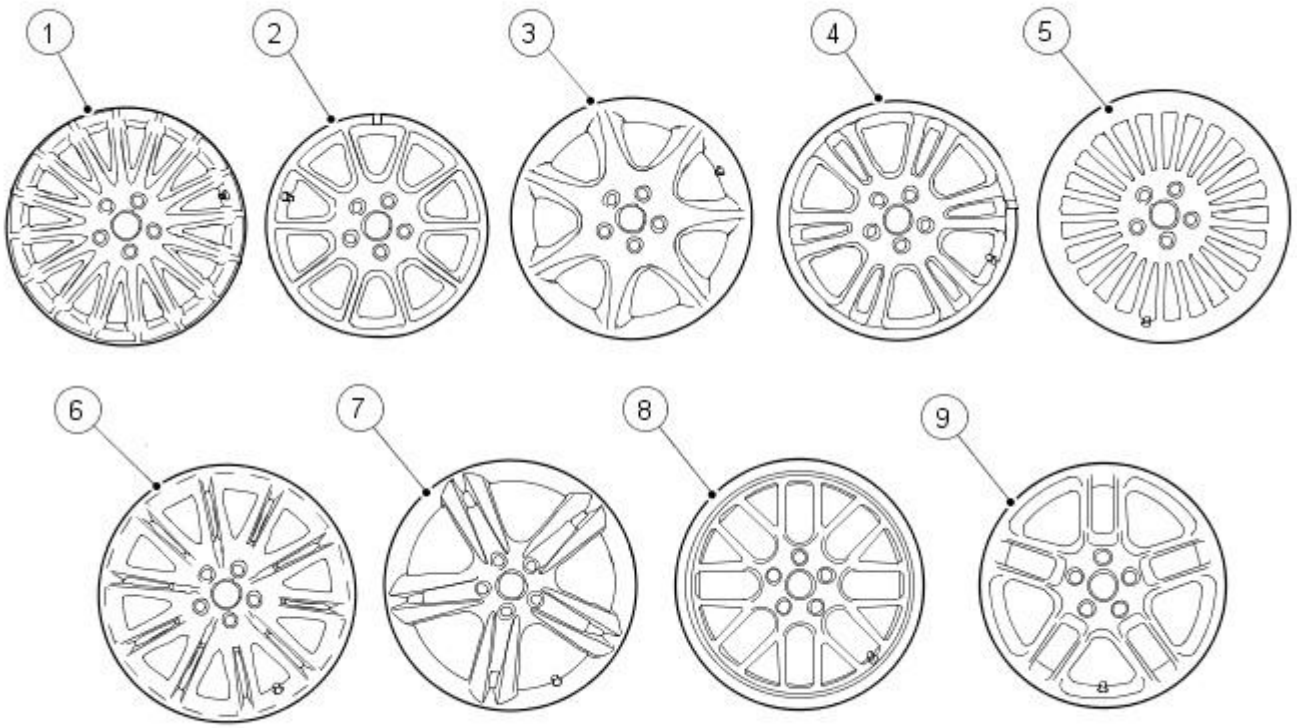


E93018

| Item | Part Number | Description |
|---|---|---|
| 1 | — | Aurora |
| 2 | — | Helios |
| 3 | — | Juno |
| 4 | — | Kronos |
| 5 | — | Mercury |
| 6 | — | Triton |
| 7 | — | Vulcan |
| 8 | - | Valencia |
| 9 | - | Barcelona |

## Locking Wheel Nuts

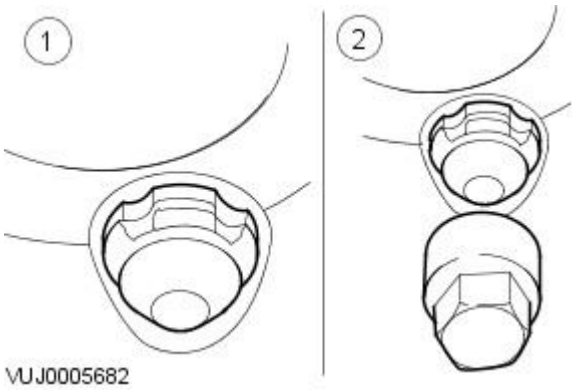


VUJ0005682

| Item | Part Number | Description |
|---|---|---|
| 1 | - | Locking wheel nut |
| 2 | - | Locking wheel nut socket |

Locking wheel nuts are fitted to all UK and Mexico vehicles with alloy wheels and are available as an accessory in certain other markets.

One locking wheel nut is fitted to each road wheel and may only be removed by using the correctly coded socket.

Locking wheel nuts are available in one length. The correct socket is supplied with the vehicle tool kit. Sets of sockets are available to Jaguar dealers.

## Recommended Tires

The radial ply tires recommended by Jaguar meet the high speed performance of the vehicle. Only tires of identical specification may be fitted as replacements. Under no circumstances must cross-ply tires be fitted.

## Tire Inflation Pressures

All recommended tires, including winter tires, must be inflated to the pressures shown in the Specifications sub-section. Inflation pressures must only be checked when the tires are cold.

GETtheMANUALS.org

## Tire Replacement and Wheel-Interchanging

When the replacement of a tire is necessary, it is preferable to fit a complete set. If two replacement tires are fitted (to one axle), they must be of the same manufacturer and type as those on the other axle.

New tires must be balanced before fitting to the vehicle.

## Winter (Snow) Tires

Winter tires must only be fitted in complete four-wheel sets of the same type and size. The maximum speed with winter tires fitted (without snow chains) is 210 km/h (131 mile/h) for H rated tires or 240 km/h (149 mile/h) for V rated tires.

When using snow chains, note that:

- Snow chains must only be fitted to the rear wheels.
- Only Jaguar snow chains should be used.
- Snow chains must not be used on roads which are clear of snow.
- The maximum speed with winter tires and snow chains fitted is 48 km/h (30 mile/h).
- Traction control (where fitted) must be switched OFF when using snow chains.

## Rotational Indicators

Some recommended winter tires may have an arrow moulded in the sidewall to indicate the correct direction of rotation. It is essential tires are fitted so that the arrow is pointing in the direction of rotation.

Some of the recommended tires for normal and winter use have an asymmetric tread pattern. These tires have inside and outside markers which should be fitted appropriately to the wheel.

## Temporary-Use Spare Wheel

In certain markets, the spare wheel supplied with the vehicle is of the temporary-use type. It is narrower than the normal road wheel and takes up less room in the wheel luggage compartment.

When using this type of spare wheel note that:

- Maximum speed must not exceed 80 km/h (50 mile/h).
- The normal road wheel must be replaced as soon as possible.
- Only one temporary-use wheel may be fitted to the vehicle at any time.
- Traction control (where fitted) must be switched OFF.

## Tread Wear Indicator

Tread wear indicators are molded into the bottom of the tread grooves across the width of the tire. The tire must be renewed when tread wear indicators become visible at the surface of the tread.

Note that tire tread depth and condition must comply with prevailing local legislation.

GETtheMANUALS.org

# Wheels and Tires - Wheels and Tires

Diagnosis and Testing

## General notes

Factory installed tires and wheels are designed to operate satisfactory when inflated to the recommended inflation pressures; refer to the Specifications sub-section. The recommended pressures apply to vehicle loads up to and including full-rated load capacity.

Correct tire pressures and driving technique have an important influence on tire life. Heavy cornering, excessively rapid acceleration and unnecessary sharp braking increase tire wear.

Replacement tires should follow the recommended:

- Size.
- Speed rating.
- Load range.
- Radial construction type.

The use of any other size or type may seriously affect:

- Safety.
- Ride.
- Handling.
- Speedometer and odometer calibration.
- Vehicle ground clearance.
- Tire clearance between body and chassis.
- Wheel bearing life.
- Brake cooling.

Wheels need to be renewed when:

- Impact damaged.
- Heavily corroded.
- Porous.
- Wheel stud holes or seats become damaged.
- They have excessive radial or lateral runout.

Safety notes

• WARNINGS:

Do not mix different types of tires on the same vehicle. Handling may be seriously affected resulting in loss of control. Failure to follow these instructions may result in personal injury.

When using winter tires, observe the direction of the sidewall moulded indicators; correct tire rotational direction is critical. Failure to follow these instructions may result in personal injury.

A tire and wheel must always be correctly matched. Wider or narrower tires than recommended could cause danger through sudden deflation. Failure to follow these instructions may result in personal injury.

When using the temporary spare wheel, maximum speed must not exceed 50 mile/h (80 km/h). Drive with caution and replace with the specified wheel / tire assembly as soon as possible. Failure to follow these instructions may result in personal injury.

Traction control (if available) must not be engaged with a temporary spare wheel fitted. Failure to follow these instructions may result in personal injury.

When changing a wheel, make sure that the vehicle cannot move. Always apply the parking brake and select the transmission park position. Failure to follow these instructions may result in personal injury.

Never run the engine with one wheel off the ground, for example, when changing the wheel. The wheel resting on the ground may cause the vehicle to move. Failure to follow these instructions may result in personal injury.

Tighten the wheel nuts to specification. Too tight may cause damage, too loose may allow the wheel to become detached. Failure to follow these instructions may result in personal injury.

Use only wheels and wheel nuts supplied by Jaguar. Aftermarket wheels or wheel nuts may not fit or function correctly and could cause injury or damage. Failure to follow these instructions may result in personal injury.

Inspection and Verification

1. **1.** Verify the customer's concern by driving the vehicle.
2. **2.** Visually inspect for obvious signs of damage:

**Visual Inspection Chart**

| Mechanical |
|---|
| Incorrect tire pressure |
| Wheel imbalance |
| Tires worn beyond tread wear indicators |
| Cuts |
| Abrasions |

GETtheMANUALS.org

| Mechanical |
|---|
| Bulges (blister) |
| Ply separation |
| Embedded objects |
| Impact damage |
| Incorrect speed rating |
| Incorrect load rating |
| Incorrect rotational direction |

3. **3.** If an obvious cause for an observed or reported concern is found, correct the cause (if possible) before proceeding to the next step.
4. **4.** If the concern is not visually evident, verify the symptom and refer to Symptom Chart.

## Tire Wear Inspection

To maximize tire performance, inspect the tires for signs of incorrect inflation and uneven wear which may indicate a need for balancing, rotation or front suspension alignment. Tires should also be checked frequently for cuts, stone bruises, abrasions, blisters, and for objects that may have become embedded in the tread. More frequent inspections are recommended when rapid or extreme temperature changes occur or when road surfaces are rough or occasionally littered with debris.

## Tire Wear Diagnosis

New tires should be installed if the wear indictors are exposed or if there is severe shoulder wear. Shoulder wear is usually caused by either excessive camber or excessive toe on radial tires.

Sometimes incorrect rear toe settings or damaged struts will cause severe cupping' or scalloped' tire wear on non-drive wheels.

Incorrect rear toe alignment will also cause other unusual wear patterns.

## Road Test

A tire vibration diagnostic procedure always begins with a road test. The road test and customer interview (if available) will provide much of the information needed to find the source of a vibration.

During the road test, drive the vehicle on a road that is smooth and free of undulations. If vibration is apparent, note and record the following:

- The speed at which the vibration occurs.
- What type of vibration occurs in each speed range.
  - mechanical or audible.
- How the vibration is affected by changes in the following:
  - engine torque.
  - vehicle speed.
  - engine speed.
- Type of vibration-sensitivity: torque sensitive, vehicle speed sensitive or engine speed sensitive.

The following explanations help isolate the source of the vibration.

## Torque Sensitive

This means that the condition may be improved or made worse by accelerating, decelerating, coasting, maintaining a steady vehicle speed or applying engine torque.

## Vehicle Speed Sensitive

This means that the vibration always occurs at the same vehicle speed and is not affected by engine torque, engine speed or the transmission gear selected.

## Engine Speed Sensitive

This means that the vibration occurs at varying vehicle speeds when a different transmission gear is selected. It may sometimes be isolated by increasing or decreasing engine speed with the transmission in NEUTRAL or by stall testing with the transmission in gear. If the condition is engine speed sensitive, the cause is probably not related to the tires.

If the road test indicates that there is tire whine, but no shake or vibration, the noise originates with the contact between the tire and the road surface.

A thumping noise usually means that the tire has a flat or soft spot making a noise as they slap the roadway. Tire whine may be distinguished from axle noise. Tire whine remains the same over a range of speeds.

**Symptom Chart**

| Symptom | Possible Sources | Action |
|---|---|---|
| Tires show excess wear on edge of treads | * Tires under-inflated | * Correct pressure to specification. |
| | * Vehicle overloaded | * Correct as required. |
| Tires show excess wear on edge of treads (having the correct tire pressures). | * Incorrect toe setting | * Set to specification. For additional information refer toSection 204-00 Suspension System - General Information |
| Tires show excess wear in center of tread. | * Tires over-inflated | * Correct pressure to specification. |
| Other excessive tire wear problems | * Incorrect tire pressure | * Correct pressure to specification. |
| | * Incorrect tire / wheel usage | * Install correct tire and wheel combination. |
| | * Loose or leaking dampers | * Tighten or install a new as necessary. For additional information refer toSection 204-02 Rear Suspension |
| | * Geometry out of alignment | * Check and adjust. |
| | * Loose, worn or damaged suspension components | * Inspect, repair or install a new as necessary. |
| | * Wheel and tire assembly out of balance | * Balance wheel and tire assembly. |

GETtheMANUALS.org

| | | |
|---|---|---|
| | * Excessive lateral or radial runout of wheel or tire | * Check, repair or install a new as necessary. Refer to the procedure in this section. |
| Wheel mounting is difficult | * Incorrect application or mismatched parts, including wheel studs and wheel nuts. Corroded, worn or damaged parts | * Clean or install a new part. |
| Wobble or shimmy affecting wheel runout | * Damaged wheel (eventually damaging wheel bearings and causing uneven tire wear) | * Inspect wheel rims for damage and runout. Install a new wheel rim as necessary. |
| Excessive vibration, rough steering or severe tire wear | * Loose or incorrect attaching parts | * Tighten or install new parts. |
| Vehicle vibrations | * Tires / wheels mismatched | * Install correct tire / wheel combination. |
| | * Inflation pressure too high or low | * Correct pressure to specification. |
| | * Uneven tire wear | * Refer to Diagnosis and Testing in this section. |
| | * Out-of-balance wheel, tire, wheel hub or disc assembly | * Determine the out-of-balance component and balance or install a new part. |
| | * Damaged or distorted wheel from road impact hazard or incorrect handling | * Install a new wheel. |
| | * Excessive radial runout | * Install a new wheel or tire. Check for incorrect wheel and tire specifications. |
| | * Excessive lateral runout | * Install a new wheel or tire. |
| | * Incorrectly seated tire | * Remount the tire. |
| | * Loose wheel mountings - damaged wheel studs, wheel nuts, worn or broken wheel hub face or foreign material on mounting faces | * Tighten or install new parts. Clean mounting surfaces. |
| | * Defective wheel bearings | * Install a new bearing set. For additional information refer toSection 204-01 Front Suspensionor Section 204-02 Rear Suspension |
| | * Brake disc imbalance | * For additional information refer to SectionSection 206-03 Front Disc Brakeor Section 206-04 Rear Disc Brake |
| | * Water in tires | * Remove water. |
| | * Loose engine or transmission mounts | * Tighten or install a new mount. |
| | * Incorrect front end alignment | * Align front end. For additional information refer toSection 204-01 Front Suspension |
| | * Loose or worn driveline or suspension parts | * Repair or install new parts. |
| | * Excessive driveshaft runout or imbalance | * Install a new driveshaft, for additional information refer toSection 205-02 Rear Drive Axle/Differential |
| | * Worn or damaged flexible drive joint | * Install a new drive shaft. For additional information refer toSection 205-02 Rear Drive Axle/Differential |
| Damaged wheel hub stud threads | * Sliding wheel across the wheel studs during installation. Loose wheel nuts | * Install new wheel studs. |
| Broken wheel studs | * Loose or overtightened wheel nuts | * Install new wheel studs. |
| Corrosion / contamination streaks from the wheel hub wheel stud holes | * Loose wheel nuts | * Check complete assembly. Install new parts. Follow correct torque procedure. |
| Damaged wheel nuts | * Loose wheel assembly | * Install new wheel nuts. Follow correct torque procedure. |
| | * Over-tightened wheel nuts | * Install new wheel nuts. Follow correct torque procedure. |
| Frozen wheel nuts | * Corrosion or galling | CAUTION: Do not permit lubricant to contaminate wheel hub stud holes or wheel nut seats.<br><br>* If corrosion is light, wire brush away corrosion. If corrosion is excessive install new wheel studs and wheel nuts. Lubricate the first three threads of wheel studs with a graphite based lubricant. |

GETtheMANUALS.org

# Wheels and Tires - Wheel and Tire

Removal and Installation

## Removal

**1.** CAUTION: Do not use heat to loosen a seized wheel nut. Excessive heat may cause damage to the wheel and wheel bearings.

Loosen the wheel nuts.

**2.** Raise and support the vehicle.
For additional information, refer to Section 100-02 Jacking and Lifting.

**3.** Remove the wheel and tire assembly.

## Installation

**1.** WARNINGS:

Make sure there is no contamination of the wheel, hub or brake disc contact surfaces. Installation without metal to metal contact at the mounting surfaces may cause the wheel nuts to loosen and allow the wheel to detach with the vehicle in motion. Failure to follow these may result in personal injury.

Apply a small amount of grease to the hub and wheel mating surfaces before installation. Make sure the grease does not come into contact with the vehicles braking components. Failure to follow these instructions may result in personal injury.

To install, reverse the removal procedure.

- Tighten to 128 Nm.

GETtheMANUALS.org

# Vehicle Dynamic Suspension - Vehicle Dynamic Suspension

Description and Operation

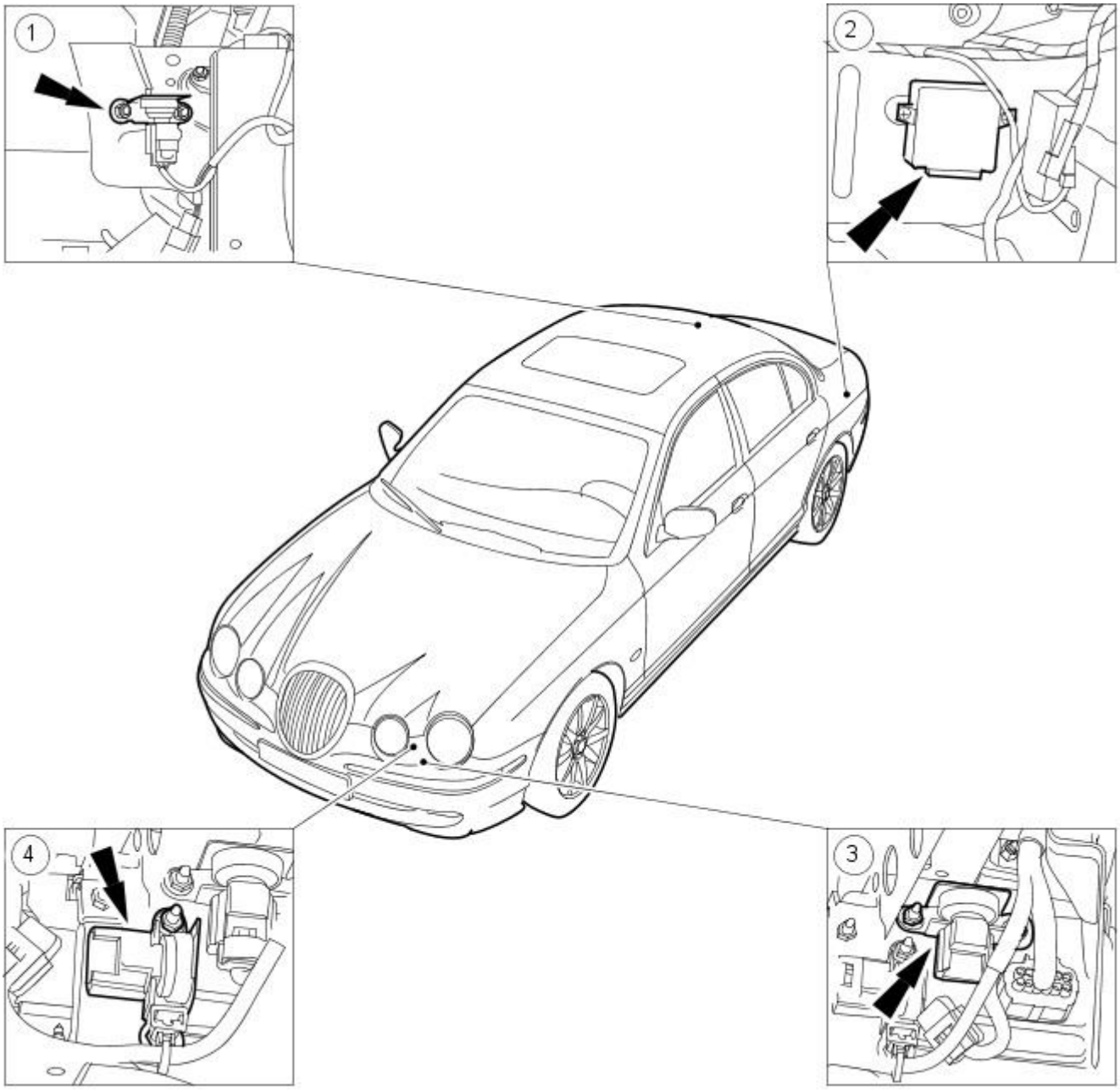


E31301

| Item | Part Number | Description |
|---|---|---|
| 1 | — | Rear vertical accelerometer |
| 2 | — | Adaptive damping module |
| 3 | — | Front vertical accelerometer |
| 4 | — | Accelerometer |

The vehicle dynamic suspension system is designed to control excessive body motions in bounce, pitch and roll while maintaining/improving ride and feel. The system controls the settings of the four vehicle dampers between firm and soft based on the road conditions and driver inputs.

The system uses the three accelerometers, vehicle speed and the brake switch status to calculate the vehicle motion. The vehicle speed and brake status information is passed to the module on the SCP network. The module then calculates the bounce, pitch and roll of the vehicle and adjusts the dampers to change the ride state. This will only occur at speeds over 3 mph (4 kph).

GETtheMANUALS.org

# Vehicle Dynamic Suspension - Vehicle Dynamic Suspension

Diagnosis and Testing

## Inspection and Verification

1. **1.** Verify the customer concern.
2. **2.** Visually inspect for obvious signs of mechanical or electrical damage.

**Visual Inspection Chart**

| Mechanical | Electrical |
|---|---|
| • Shock absorber | • fuse(s)<br>• Wiring harness/electrical connectors<br>• Accelerometers<br>• Module |

3. **3.** If an obvious cause for an observed or reported concern is found, correct the cause (if possible) before proceeding to the next step.
4. **4.** If the cause is not visually evident, verify the symptom and refer to the Jaguar Approved Diagnostic System.

GETtheMANUALS.org

# Vehicle Dynamic Suspension - Accelerometer

Removal and Installation

## Removal

1. Remove the radiator splash shield.
   For additional information, refer to Section 501-02 Front End Body Panels.
2. Remove the radiator lower cowl.

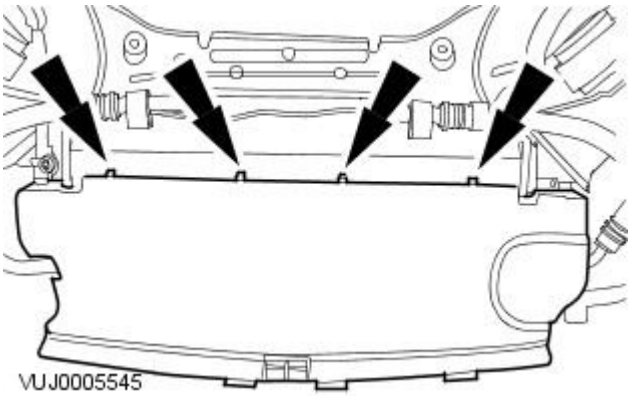


3. Disconnect the electrical connector.

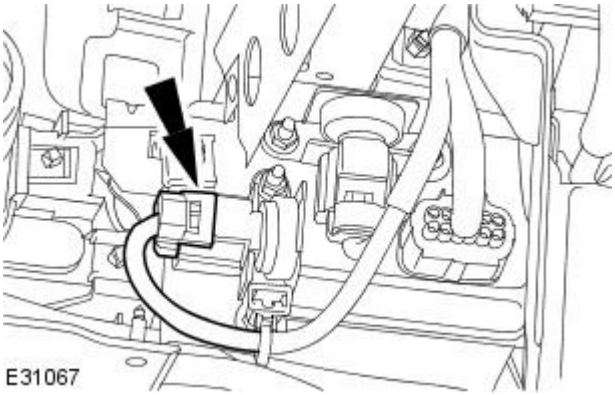


4. Remove the accelerometer.

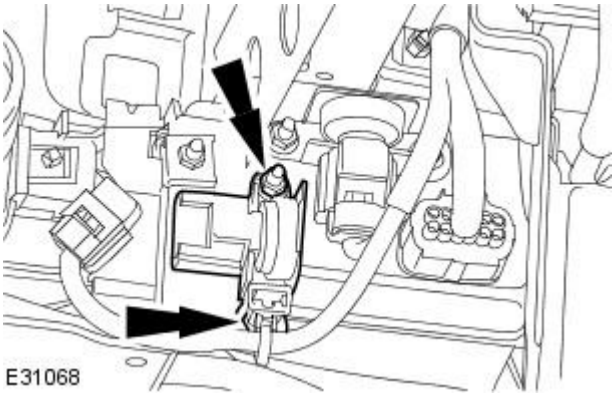


## Installation

1. To install, reverse the removal procedure.

GETtheMANUALS.org

# Vehicle Dynamic Suspension - Adaptive Damping Module

Removal and Installation

## Removal

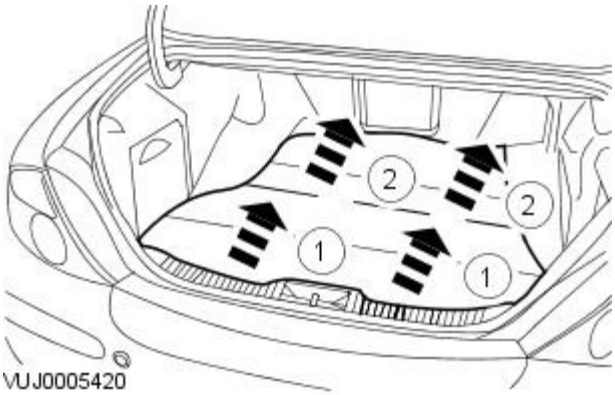


**1.** Reposition the luggage compartment floor covering.

1. Detach the luggage compartment floor covering.
2. Reposition the luggage compartment floor covering.

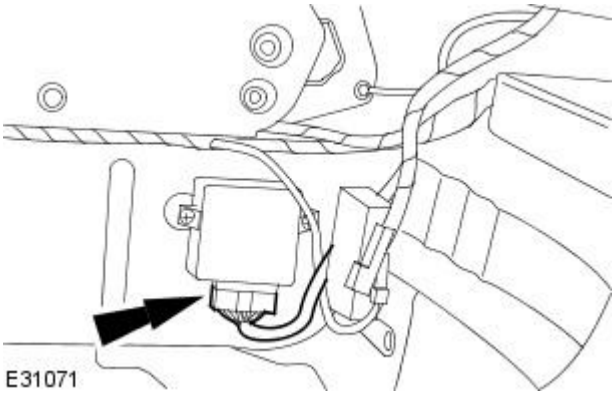


**2.** Disconnect the adaptive damping module electrical connector.

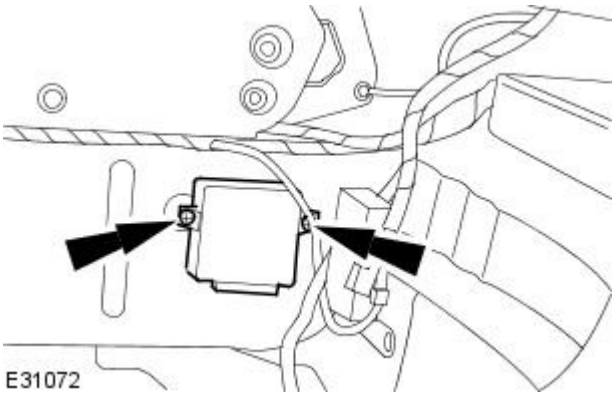


**3.** Remove the adaptive damping module.

## Installation

**1.** To install, reverse the removal procedure.

GETtheMANUALS.org

# Vehicle Dynamic Suspension - Front Vertical Accelerometer

Removal and Installation

## Removal

1. Remove the radiator splash shield.
   For additional information, refer to Section 501-02 Front End Body Panels.
2. Remove the radiator lower cowl.

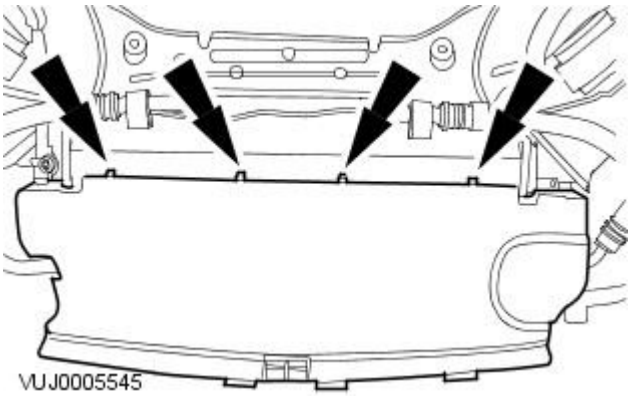


3. Disconnect the electrical connector.

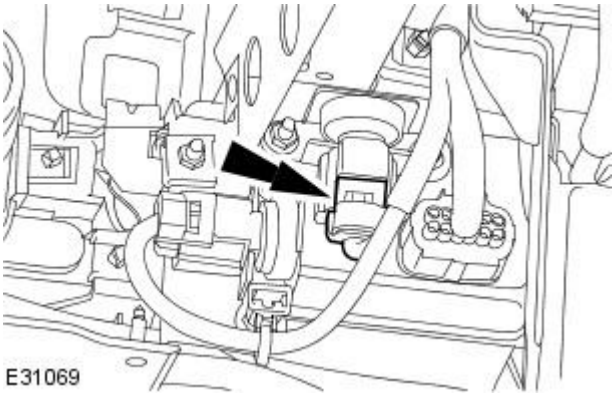


4. Remove the front vertical accelerometer vertical sensor.

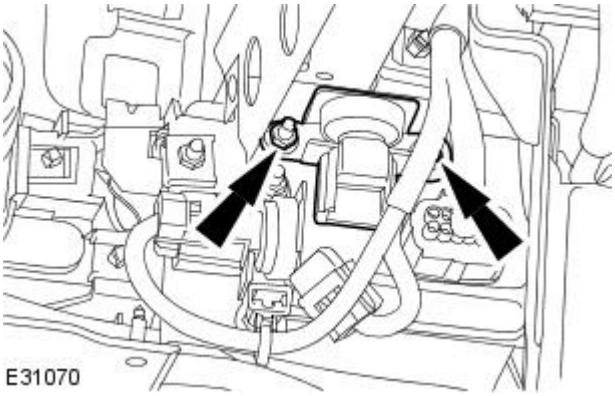


## Installation

1. To install, reverse the removal procedure.

GETtheMANUALS.org

# Vehicle Dynamic Suspension - Rear Vertical Accelerometer

Removal and Installation

## Removal

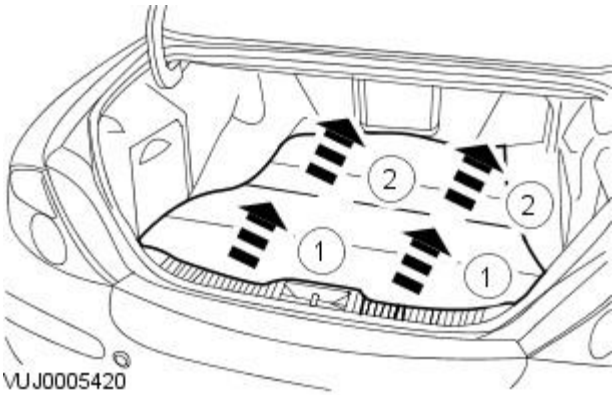


**1.** Reposition the luggage compartment floor covering.

1. Detach the luggage compartment floor covering.
2. Reposition the luggage compartment floor covering.

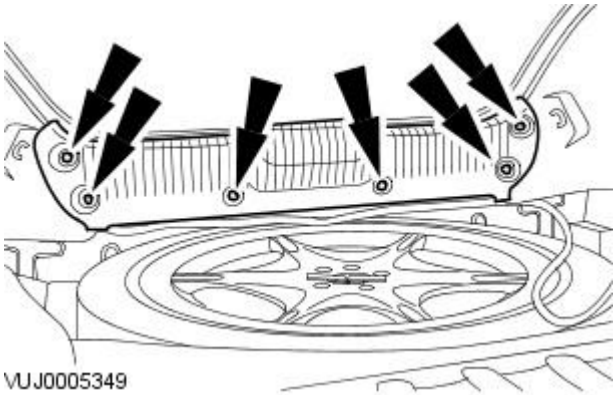


**2.** Remove the luggage compartment trim panel.

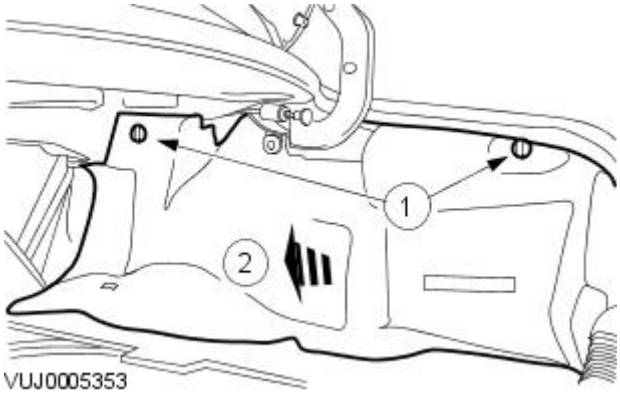


**3.** Remove the luggage compartment side trim panel.

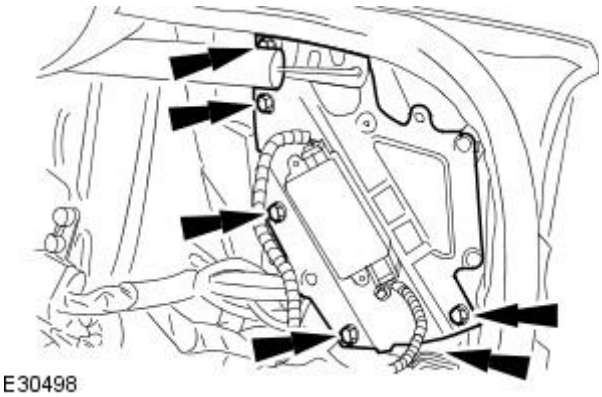


**4.** Detach the rear electronics module (REM) bracket.

GETtheMANUALS.org

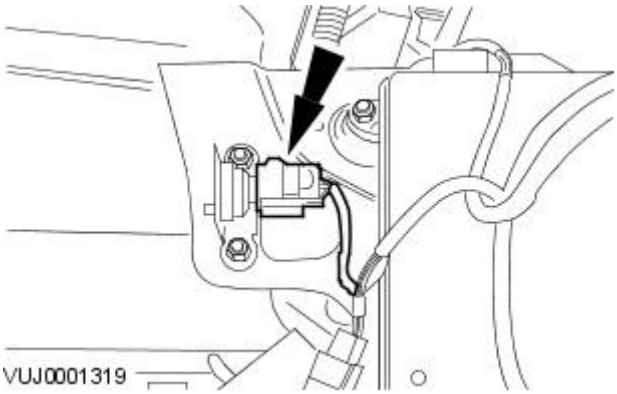


**5.** Disconnect the electrical connector.

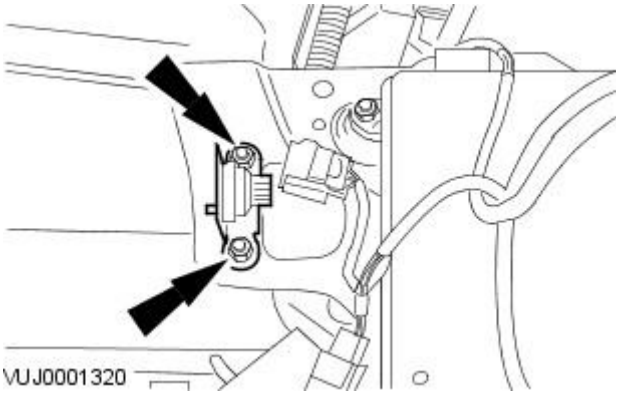


**6.** Remove the adaptive damping rear vertical accelerometer.

## Installation

**1.** To install, reverse the removal procedure.

GETtheMANUALS.org

# Driveline System - General Information - Driveline System

Description and Operation

The driveline transfers engine torque to the drive wheels. Power is transmitted through the transmission to the driveshaft and then to the rear drive axle which is connected to the rear drive halfshaft.
For additional information, refer to: Driveshaft (205-01 Driveshaft, Description and Operation) /
Rear Drive Axle and Differential (205-02 Rear Drive Axle/Differential, Description and Operation) /
Rear Halfshaft (205-05 Rear Drive Halfshafts, Removal and Installation).

The engine angle is built into the engine mounts. If the engine angle is out of specification, the engine mounts must be inspected for damage.

## Driveline Vibration

Driveline vibration exhibits a higher frequency and lower amplitude than high-speed shake. Driveline vibration is directly related to the speed of the vehicle and is usually noticed at various speed ranges. Driveline vibration can be felt as a tremor in the floorpan or is heard as a rumble, hum, or boom. Driveline vibration can exist in all drive modes, but may exhibit different symptoms depending upon whether the vehicle is accelerating, decelerating, cruising, or coasting. Check the driveline angles if the vibration is particularly noticeable during acceleration or deceleration, especially at lower speeds. Check that the centre bearing washers between the body and bearing housing are 3mm minimum and 8mm maximum thickness.

In order to diagnose vibrations in the driveshaft, refer to the Jaguar approved diagnostic system for analysis/rectification.

## Driveline Angle

Driveline angularity is the angular relationship between the engine crankshaft, the driveshaft, and the rear drive axle pinion. Factors determining driveline angularity include ride height, rear springs and engine mounts.

An incorrect driveline (pinion) angle can often be detected by the driving condition in which the vibration occurs.

- A vibration during coasting from 72 to 56 km/h (45 to 35 mph) is often caused by a high pinion angle.
- A vibration during acceleration from 56 to 72 km/h (35 to 45 mph) may indicate a low pinion angle.

When these conditions exist, check the driveline angles.

If the tires and driveline angle are not the cause, carry out the Noise, Vibration and Harshness (NVH) tests to determine whether the concern is caused by a condition in the driveline.
For additional information, refer to: Noise, Vibration and Harshness (NVH) (100-04 Noise, Vibration and Harshness, Diagnosis and Testing).

## Rear Drive Axle Identification Tag

CAUTION: The rear drive axle identification tag is the official identifier. Do not damage the tag. Always reinstall the tag if removed.

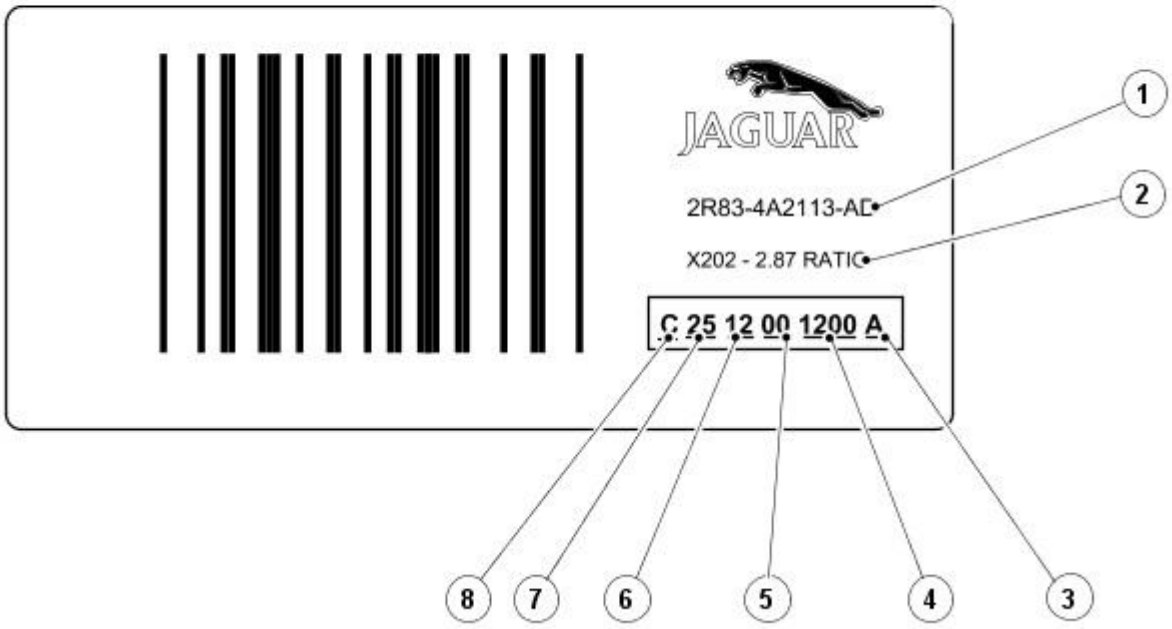


E49637

| Item | Description |
|---|---|
| 1 | Part Number |
| 2 | Ratio and Vehicle Line |
| 3 | Rear Drive Axle Ratio |

**Vehicles built upto 01/2004**

| | Engine capacity | Transmission | Axle Ratio |
|---|---|---|---|
| 4.2L V8 Supercharger | • A and E = 2.87 Ratio<br>• B and F = 3.07 Ratio | Automatic | 2:87 |
| 4.2L V8 | • C and G = 3.31 Ratio | Automatic | 2:87 |
| 3.0 V6 | • D = 2.69 Ratio | Automatic | 3.31 |

GETtheMANUALS.org

| Engine capacity | Transmission | Axle Ratio |
|---|---|---|
| 3.0 V6 | Manual | 3.07 |
| 2.5 V6 | Automatic | 3.31 |
| 2.5 V6 | Manual | 3.07 |

**Vehicles built 02/2004 onwards**

| Engine capacity | Transmission | Axle Ratio |
|---|---|---|
| 4.2L V8 Supercharger | Automatic | 2:87 |
| 4.2L V8 | Automatic | 2:87 |
| 3.0 V6 | Automatic | 3.31 |
| 3.0 V6 | Manual | 3.07 |
| 2.5 V6 | Automatic | 3.31 |
| 2.5 V6 | Manual | 3.07 |
| 2.7 V6 Diesel | Automatic | 3.07 |
| 2.7 V6 Diesel | Manual | 2.69 |

The plant code denotes a particular rear drive axle design and specific ratio. In addition, the plant code will not change as long as that particular rear drive axle never undergoes an external design change. If, however, an internal design change takes place during the production life of the rear drive axle and that internal change affects parts interchangeability, a dash and numerical suffix is added to the plant code. This means that as an assembly both rear drive axles are interchangeable; however, internally they are different. Therefore, each requires different internal parts at the time of repair.

GETtheMANUALS.org

# Driveline System - General Information - Driveline System

Diagnosis and Testing

## Inspection and Verification

CAUTION: Only serviceable items can be renewed or adjusted. Failure to follow this instruction may result in the warranty of the component being rejected.

Certain driveline trouble symptoms are also common to the engine, transmission, wheel bearings, tires, and other parts of the vehicle. For this reason, make sure that the cause of the trouble is in the driveline before adjusting, repairing, or installing any new components. REFER to: Noise, Vibration and Harshness (NVH) (100-04 Noise, Vibration and Harshness, Diagnosis and Testing).

1. **1.** Verify the customer concern by carrying out a road test of the vehicle.
2. **2.** Visually inspect for obvious signs of mechanical damage.
3. **3.** If an obvious cause for an observed or reported concern is found, correct the cause (if possible) before proceeding to the next step.
4. **4.** If the concern is not visually evident, verify the symptom and refer to the Symptom Chart.

## Rear Drive Axle Noise

### Gear Howl and Whine

Gear howl or whining of the ring gear and pinion is due to an incorrect gear pattern, gear damage or incorrect bearing preload.

### Bearing Whine

Bearing whine is a high-pitched sound similar to a whistle. It is usually caused by worn/damaged pinion bearings, which are operating at driveshaft speed. Bearing noise occurs at all driving speeds. This distinguishes it from gear whine which is speed dependent.

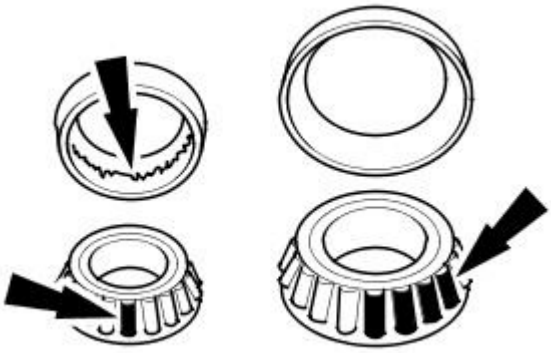

ELE0012864

As noted, pinion bearings make a high-pitched, whistling noise, usually at all speeds. If however there is only one pinion bearing that is worn/damaged, the noise may vary in different driving phases.

A wheel bearing noise can be mistaken for a pinion bearing noise.

### Chuckle

Chuckle that occurs on the coast driving phase is usually caused by excessive clearance between the differential gear hub and the differential case bore.

Damage to a gear tooth on the coast side can cause a noise identical to a chuckle. A very small tooth nick or ridge on the edge of a tooth can cause the noise.

GETtheMANUALS.org

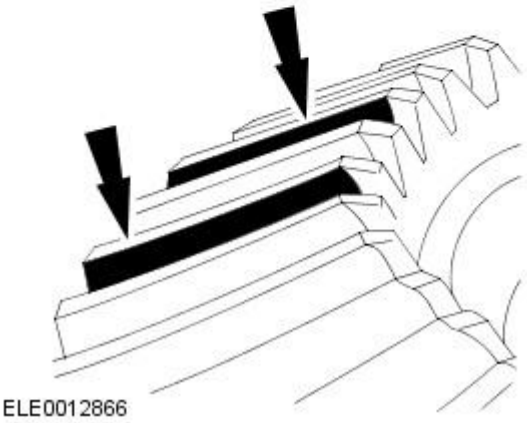


**Knock**

Knock, which can occur on all driving phases, has several causes including damaged teeth or gearset.

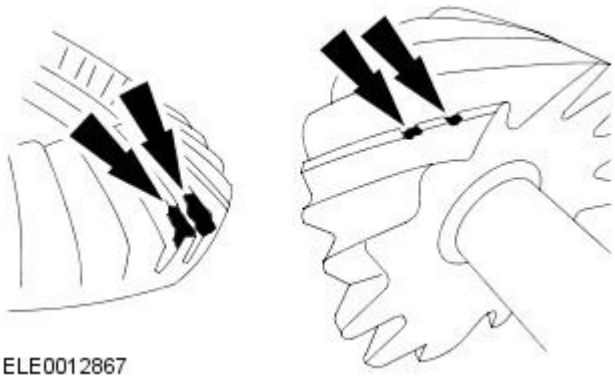


A gear tooth damaged on the drive side is a common cause of the knock.

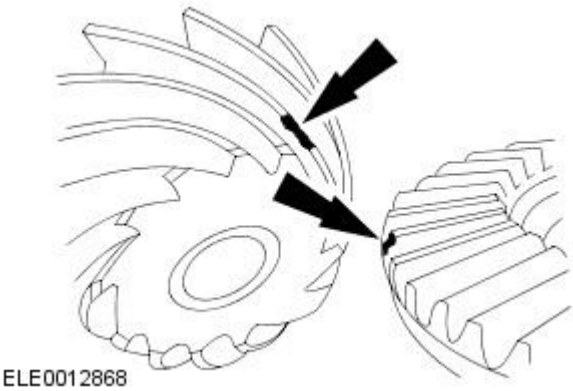


**Clunk**

Clunk is a metallic noise heard when the automatic transmission is engaged in REVERSE or DRIVE. The noise may also occur when the throttle is applied or released. Clunk is caused by transmission calibration, backlash in the driveline or loose suspension components and is felt or heard in the vicinity of the rear drive axle.

**Bearing Rumble**

Bearing rumble sounds like marbles being tumbled. This condition is usually caused by a worn/damaged wheel bearing. The lower pitch is because the wheel bearing turns at only about one-third of the driveshaft speed. Wheel bearing noise also may be high-pitched, similar to gear noise, but will be evident in all four driving modes.

GETtheMANUALS.org

## Symptom Chart

**Symptom Chart**

| Symptom | Possible Sources | Action |
|---|---|---|
| Noise is at constant tone over a narrow vehicle speed range. Usually heard on light drive and coast conditions. | * Rear drive axle. | * For additional information, GO to Pinpoint Test A. . |
| Noise is the same on drive or coast | * Road.<br>* Wheel bearing. | * Normal conditions.<br>* CHECK and INSTALL a new wheel bearing as necessary. For additional information,<br>REFER to: Rear Wheel Bearing (204-02 Rear Suspension, Removal and Installation). |
| | * Worn or damaged driveshaft joint. | * INSTALL new components as necessary. |
| | * Driveshaft center bearing. | * INSTALL new components as necessary. |
| Noise is produced with the vehicle standing and driving | * Engine. | * For additional information,<br>REFER to: Engine (303-01A Engine - 2.5L NA V6 - AJV6/3.0L NA V6 - AJ27, Diagnosis and Testing) / Engine (303-01B Engine - V8 4.2L Petrol/V8 S/C 4.2L Petrol, Diagnosis and Testing).<br>or<br>REFER to: Engine (303-01C Engine - 2.7L V6 - TdV6, Diagnosis and Testing). |
| | * Transmission. | * For additional information,<br>REFER to: Diagnostic Strategy - VIN Range: N52048->N99999 (307-01 Automatic Transmission/Transaxle, Diagnosis and Testing) / Manual Transmission (308-03A Manual Transmission/Transaxle - Vehicles With: 5-Speed Manual Transmission - GETRAG 221, Diagnosis and Testing).<br>or<br>REFER to: Manual Transmission (308-03B, Diagnosis and Testing). |
| Noise is more pronounced while turning | * Differential side gears and pinion gears. | * For additional information,<br>REFER to: Driveline System (205-00 Driveline System - General Information, Diagnosis and Testing). |
| Loud clunk in the driveline when shifting from reverse to forward | * Transmission out of calibration.<br>* Engine idle speed set too high. | * Using the Jaguar approved diagnostic system, calibrate the transmission control module (TCM).<br>* Check and adjust the idle speed as necessary. For additional information,<br>REFER to: Electronic Engine Controls - VIN Range: M45255->N52047 (303-14A Electronic Engine Controls - 2.5L NA V6 - AJV6/3.0L NA V6 - AJ27, Diagnosis and Testing) /<br>Electronic Engine Controls - VIN Range: M45255->N52047 (303-14B Electronic Engine Controls - V8 4.2L Petrol/V8 S/C 4.2L Petrol, Diagnosis and Testing).<br>or<br>REFER to: Electronic Engine Controls (303-14C Electronic Engine Controls - 2.7L V6 - TdV6, Diagnosis and Testing). |
| | * Automatic transmission output flange splines. | * Refer to Technical service bulletins. |
| | * Rear drive axle/differential unit to subframe mounting bushing. | * Refer to Technical service bulletins. |
| | * Transmission Mount.<br>* Engine mount. | * INSPECT and INSTALL new transmission mounts as necessary.<br>* INSPECT and INSTALL new engine mounts as necessary. |
| | * Transmission. | * For additional information,<br>REFER to: Diagnostic Strategy - VIN Range: N52048->N99999 (307-01 Automatic Transmission/Transaxle, Diagnosis and Testing) / Manual Transmission (308-03A Manual Transmission/Transaxle - Vehicles With: 5-Speed Manual Transmission - GETRAG 221, Diagnosis and Testing).<br>or<br>REFER to: Manual Transmission (308-03B, Diagnosis and Testing). |
| | * Suspension components. | * INSPECT and INSTALL new suspension components as necessary. |
| | * Backlash in the driveline. | * INSPECT and INSTALL new suspension components as necessary. |
| Clicking, popping, or grinding noises | * Inadequate or contaminated lubrication in the rear drive halfshaft constant velocity (CV) joint.<br>* Another component contacting the rear drive halfshaft.<br>* Wheel bearings, brakes or suspension components. | * INSPECT, CLEAN and LUBRICATE with new grease as necessary.<br>* INSPECT and REPAIR as necessary.<br>* INSPECT and INSTALL new components as necessary. |
| Vibration at highway speeds | * Out-of-balance wheels or tires. | * INSTALL new tire(s) as necessary.<br>REFER to: Wheel and Tire (204-04 Wheels and Tires, Removal and Installation). |
| | * Driveline out of balance/misalignment. | * For additional information, refer to the Jaguar approved diagnostic system. |
| | * Propshaft centre bearing touching body mounting point. | * Check for correct spacer washer thickness. INSPECT and INSTALL new washers as necessary. |
| Shudder, Vibration During Acceleration | * Powertrain/driveline misalignment. | * CHECK for misalignment. INSTALL new components as necessary. |
| Lubricant Leak | * Vent. | * Check oil level and correct as necessary. |
| | * Damaged seal. | * INSTALL new components as necessary. |
| | * Rear drive axle filler plug. | * INSTALL new components as necessary. |
| | * Rear drive axle rear cover joint. | * INSTALL new components as necessary. |

GETthemANUALS.org

| PINPOINT TEST A : EXCESSIVE DRIVELINE NOISE | |
|---|---|
| **TEST CONDITIONS** | **DETAILS/RESULTS/ACTIONS** |
| **A1: CHECK NOISE FROM VEHICLE ON ROAD TEST** | |
| | 1 Road test vehicle to determine load and speed conditions when noise occurs. |
| | 2 Assess the noise with different gears selected. |
| | Does the noise occur at the same vehicle speed?<br>**Yes**<br>INSTALL a new final drive. TEST the system for normal operation.<br>**No**<br>REFER to<br>REFER to: Engine - V8 4.2L Petrol/V8 S/C 4.2L Petrol/2.5L NA V6 - AJV6/3.0L NA V6 - AJ27 (303-00 Engine System - General Information, Diagnosis and Testing).<br>or<br>REFER to: Engine - 2.7L V6 - TdV6 (303-00 Engine System - General Information, Diagnosis and Testing).<br>and<br>REFER to: Diagnostic Strategy - VIN Range: N52048->N99999 (307-01 Automatic Transmission/Transaxle, Diagnosis and Testing).<br>or<br>REFER to: Manual Transmission and Clutch (308-00 Manual Transmission/Transaxle and Clutch - General Information, Diagnosis and Testing). |

GETtheMANUALS.org

# Driveline System - General Information - Driveline Angle Inspection

General Procedures

| Special Tool(s) | |
|---|---|
| 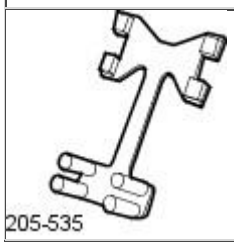 205-535 | Alignment Tool<br><br>205-535 |

All vehicles

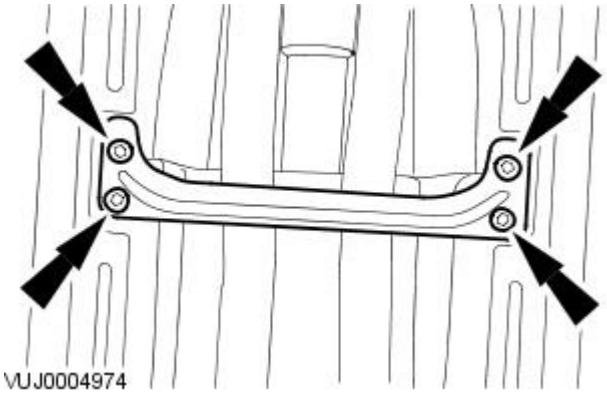


1. Raise and support the vehicle.
   For additional information, refer to: Lifting (100-02 Jacking and Lifting, Description and Operation).
2. Remove the support bracket.

All except vehicles with diesel engine

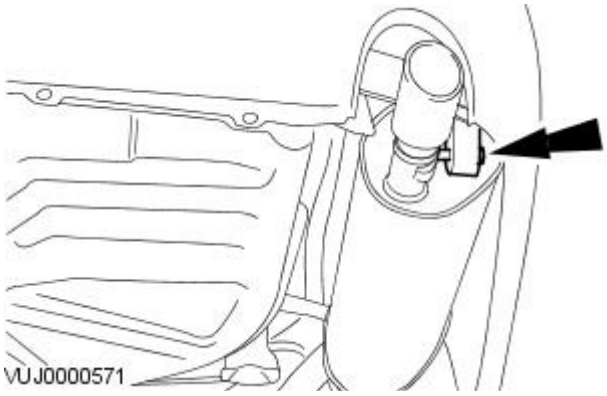


3. NOTE: Right-hand shown, Left-hand similar.

   Detach the rear muffler and tailpipe exhaust hanger insulator.

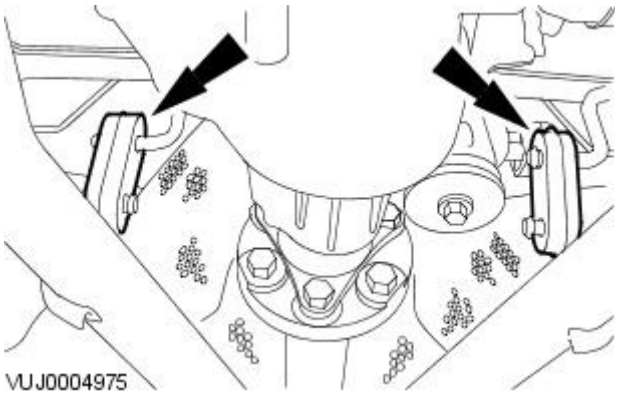


4. CAUTION: Using a suitable transmission jack, support the intermediate muffler.

   Detach the intermediate muffler exhaust hanger insulators.

All vehicles

GETtheMANUALS.org

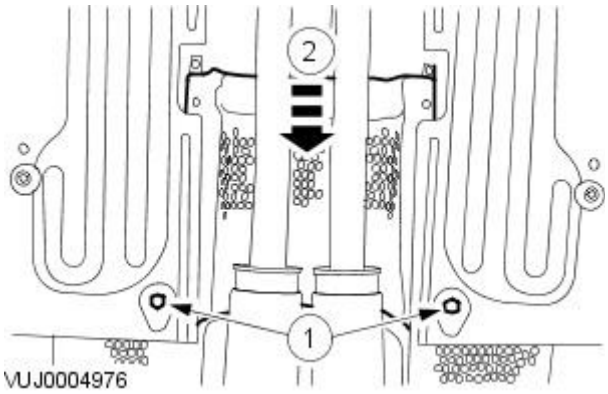


**5.** Reposition the driveshaft heat shield.

1. Remove the retaining bolts.
2. Reposition the driveshaft heat shield.

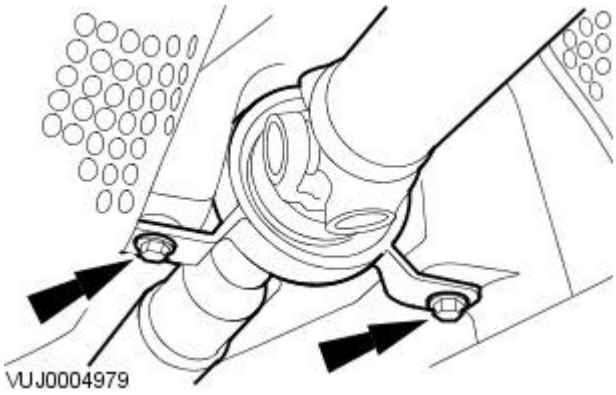


**6.** Loosen the driveshaft centre bearing retaining bolts two complete turns.

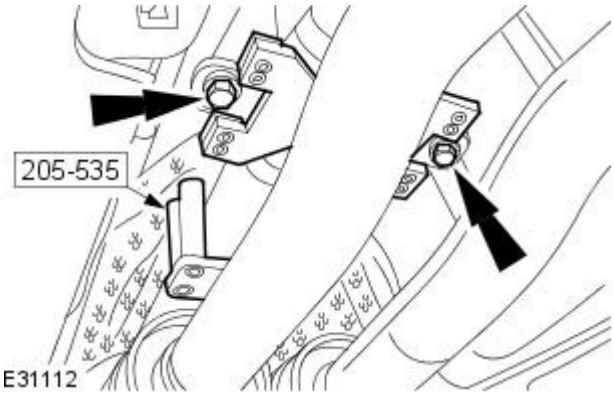


**7.** CAUTION: Make sure the driveshaft centre bearing is correctly aligned to the driveshaft. Failure to follow these instructions may result in damage to the vehicle.

Using the special tool, align driveshaft centre bearing.

- Tighten to 40 Nm.

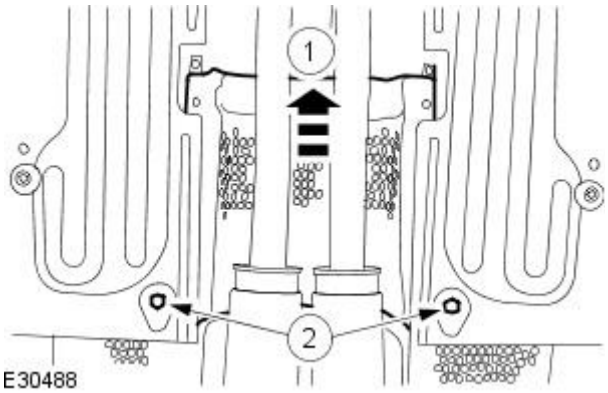


**8.** Install the driveshaft heat shield retaining bolts.

1. Reposition the driveshaft heat shield.
2. Install the driveshaft heat shield retaining bolts.
   1. Tighten to 7 Nm.

All except vehicles with diesel engine

GETtheMANUALS.org

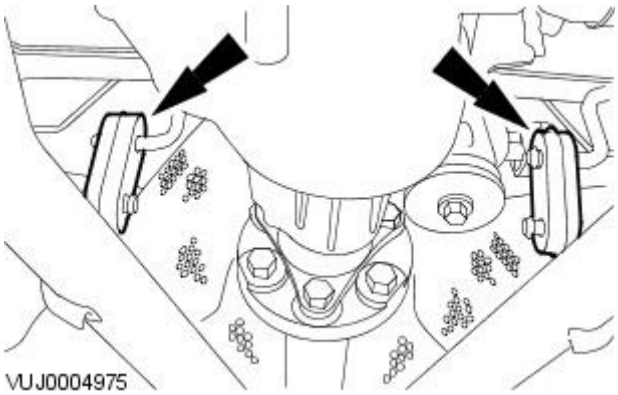


**9.** Attach the intermediate muffler exhaust hanger insulators.

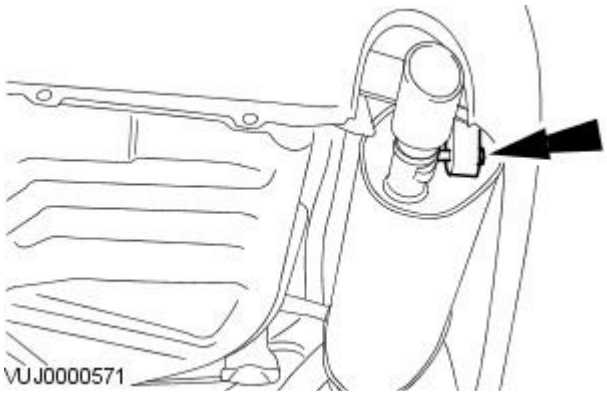


**10.** NOTE: Right-hand shown, Left-hand similar.

Attach the rear muffler and tailpipe exhaust hanger insulator.

All vehicles

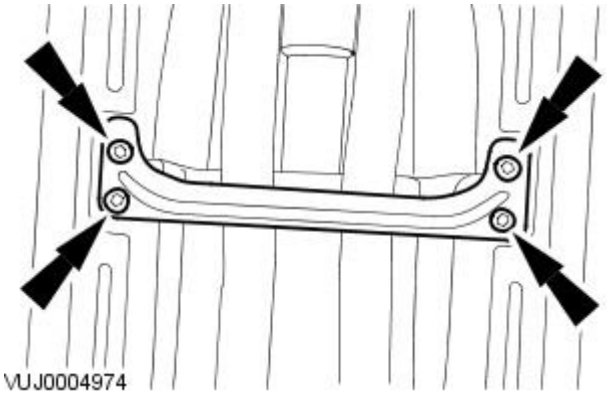


**11.** Install the support bracket.

- Tighten to 9 Nm.

GETtheMANUALS.org

# Driveshaft -

**Torque Specifications**

| Description | Nm | lb-ft | lb-in |
|---|---|---|---|
| Centre bearing retaining bolts | 48 | 36 | - |
| Transmission flexible joint retaining bolts | 127 | 94 | - |
| Rear drive axle CV joint retaining bolts | 73 | 54 | - |
| Driveshaft heat shield retaining bolts | 7 | - | 62 |

GETtheMANUALS.org

# Driveshaft - Driveshaft

Description and Operation

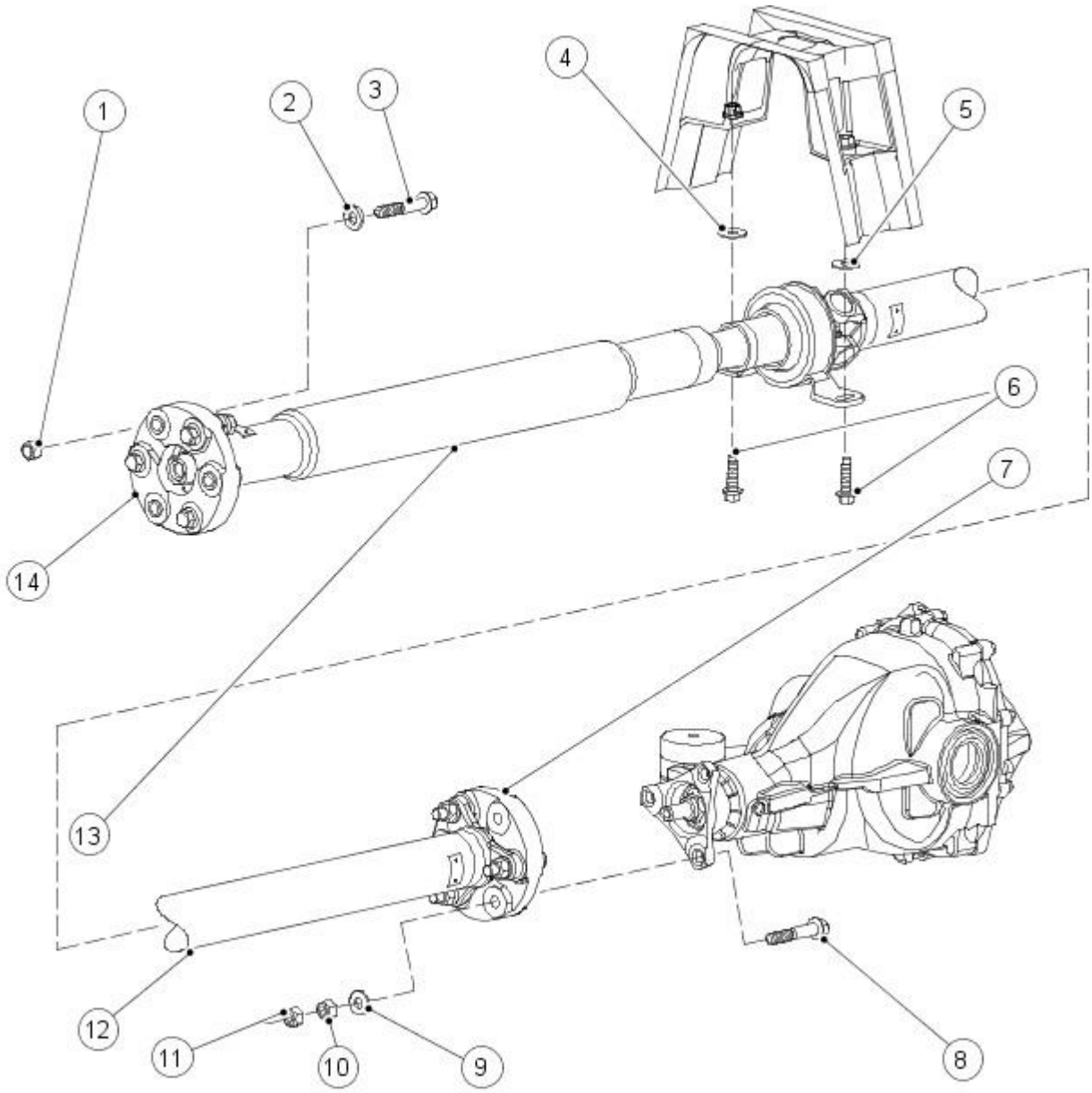


VUJ0004980

| Item | Part Number | Description |
|---|---|---|
| 1 | — | Transmission flexible joint retaining nut |
| 2 | — | Transmission flexible joint washer |
| 3 | — | Transmission flexible joint retaining bolt |
| 4 | — | Centre bearing spacer |
| 5 | — | Centre bearing spacer |
| 6 | — | Centre bearing retaining bolts |
| 7 | — | Rear drive axle flexible joint |
| 8 | — | Rear drive axle flexible joint retaining bolt |
| 9 | — | Rear drive axle flexible joint washer |
| 10 | — | Rear drive axle flexible joint retaining nut |
| 11 | — | Rear drive axle flexible joint balance nut |
| 12 | — | Rear driveshaft tube |
| 13 | — | Collapsible front driveshaft tube |
| 14 | — | Transmission flexible joint |

CAUTION: To preserve 'drive line' refinement, individual parts, other than fixings, MUST NOT be renewed. In the event of any balance or driveshaft component related concern, the complete assembly must be renewed. Under no circumstances may the flexible coupling be removed from the driveshaft (or its fixings be loosened). Do not drop or subject the driveshaft to damage.

• NOTE: All driveshaft assemblies are balanced. If undercoating the vehicle, protect the driveshaft, universal joints and the rear drive axle shafts to prevent over-spray of the undercoating material.

The driveshaft consists of the following:

- A two piece welded steel tube with a splined center slip joint.
- A universal joint.
- A center bearing.
- Two flexible joints.

## Universal Joint

GETtheMANUALS.org

The universal joint is:

- A lubed-for-life design and requires no lubrication in service.

Published: 11-May-2011

# Driveshaft - Driveshaft

Diagnosis and Testing

For additional information, refer toSection 205-00 Driveline System - General Information.

GETtheMANUALS.org

# Driveshaft - Driveshaft Runout and Balancing

General Procedures

1. For additional information, refer to the Jaguar Approved Diagnostic System.

GETtheMANUALS.org

# Driveshaft - Driveshaft

Removal and Installation

## Removal

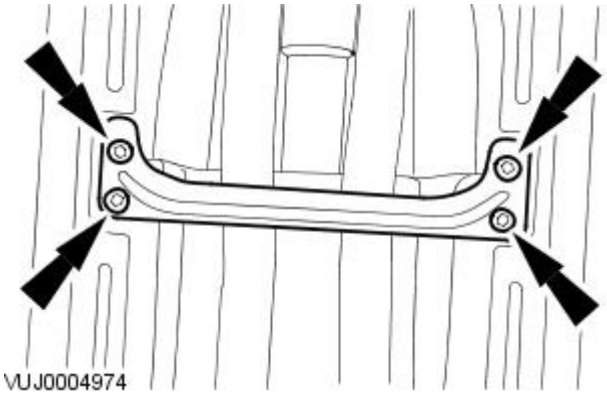


1. Raise and support the vehicle.
   For additional information, refer to Section 100-02 Jacking and Lifting.
2. Remove the support bracket.

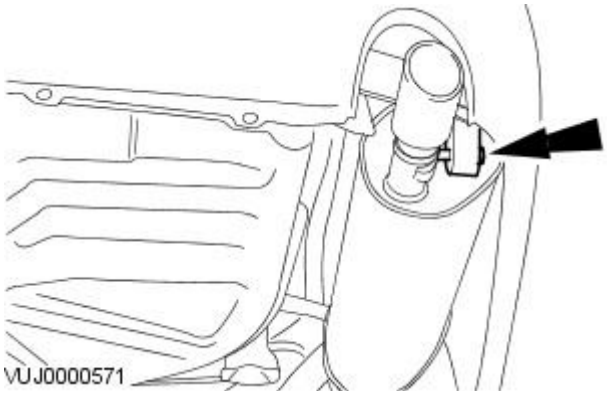


3. NOTE: Right-hand shown, Left-hand similar.

   Detach the rear muffler and tailpipe exhaust hanger insulator.

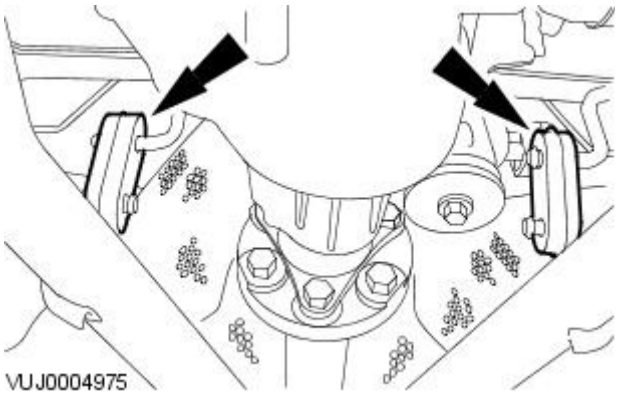


4. CAUTION: Using a suitable transmission jack, support the intermediate muffler.

   Detach the intermediate muffler exhaust hanger insulators.

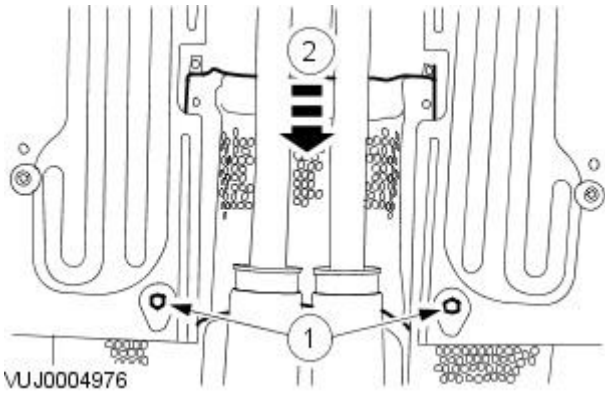


5. Remove the driveshaft heat shield.
   1. Remove the retaining bolts.
   2. Remove the driveshaft heat shield.

GETtheMANUALS.org

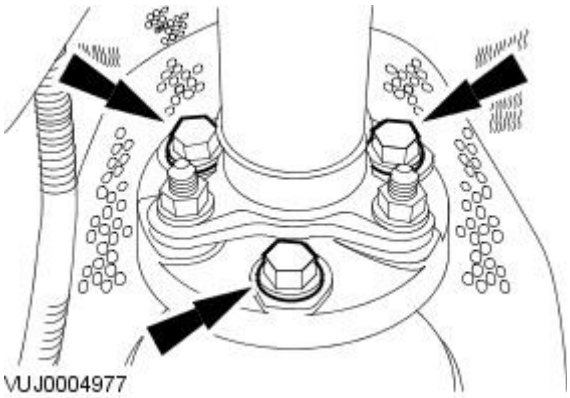


**6.** CAUTION: Under no circumstances must the flexible coupling (or its fixings) be loosened or removed from the driveshaft.

Detach the driveshaft from the transmission flange.

- Mark the position of the driveshaft in relation to the transmission flange.
- Mark the position of each nut and bolt in relation to the transmission flexible joint.

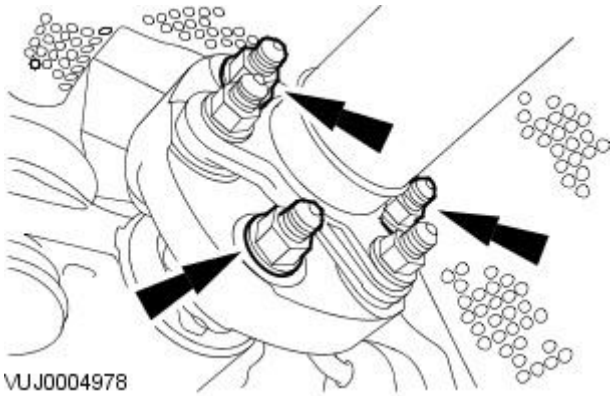


**7.** CAUTION: Under no circumstances must the flexible coupling (or its fixings) be loosened or removed from the driveshaft

Detach the driveshaft from the rear drive axle flange.

- Mark the position of the driveshaft in relation to the rear drive axle flange.
- Mark the position of the balance nut in relation to the rear drive axle flange (if fitted).
- Mark the position of each nut and bolt in relation to the rear drive axle flexible joint.

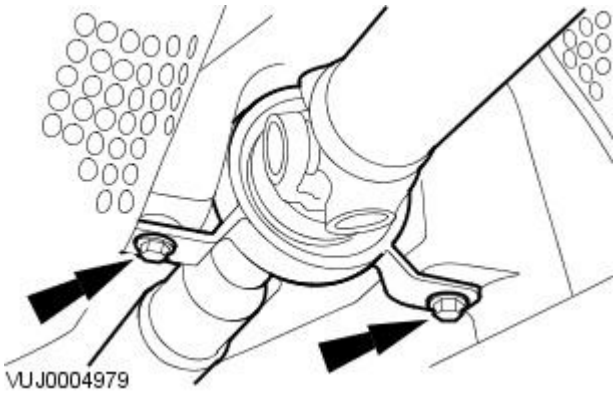


**8.** CAUTION: Support the driveshaft front and rear sections.

• NOTE: Note the position of the driveshaft centre bearing spacers.

Remove the driveshaft.

- Remove the driveshaft centre bearing spacers.

## Installation

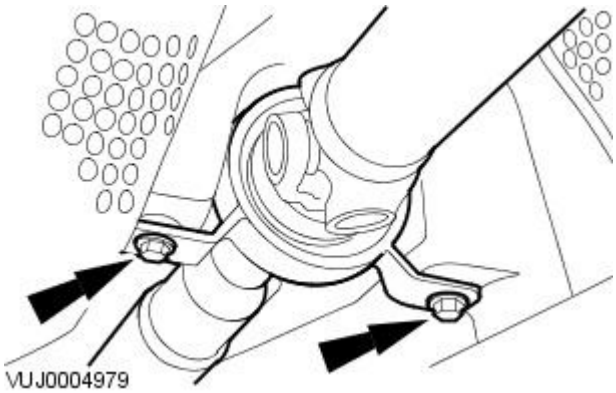


**1.** NOTE: If a new driveshaft is installed, refer to Jaguar Approved Diagnostic System to establish the correct location for the balance nut if required.

• NOTE: Do not fully tighten the driveshaft centre bearing retaining bolts.

Tighten the driveshaft centre bearing retaining bolts.

- Install the driveshaft centre bearing spacers.

GETtheMANUALS.org

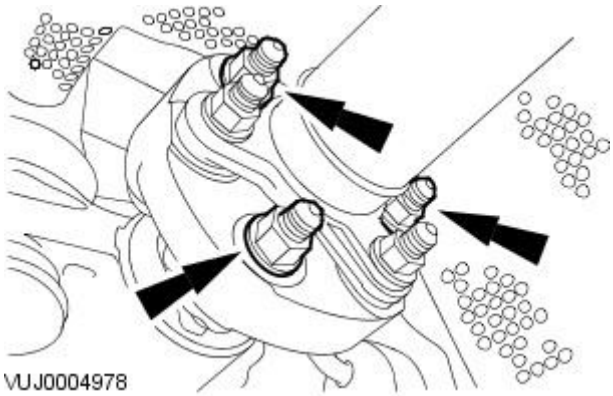


**2.** Attach the driveshaft to the rear drive axle flange.

- Tighten to 88 Nm.

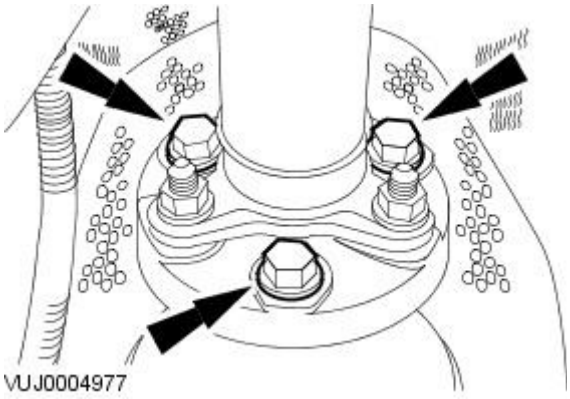


**3.** Attach the driveshaft to the transmission flange.

- Tighten to 108 Nm.

**4.** CAUTION: Make sure the driveshaft centre bearing is correctly aligned to the driveshaft. Failure to follow these instructions may result in damage to the vehicle.

Carry out the Driveline Angle Inspection,
For additional information, refer to Section 205-00 Driveline System - General Information.

GETtheMANUALS.org

# Rear Drive Axle / Differential -

**General Specifications**

| Item | Specification |
|---|---|
| Differential fluid type | M2C192A synthetic |
| Differential fluid capacity | 1.3 liters |

**Torque Specifications**

| Description | Nm | lb-ft | lb-in |
|---|---|---|---|
| Axle assembly front retaining bolt | 90 | 66 | - |
| Axle assembly rear retaining bolts | 200 | 148 | - |
| Driveshaft flexible joint | 88 | 65 | - |

GETtheMANUALS.org

# Rear Drive Axle / Differential - Rear Drive Axle and Differential

Description and Operation

CAUTION: Only serviceable items can be renewed or adjusted. Failure to follow this instruction may result in the warranty of the component being rejected.

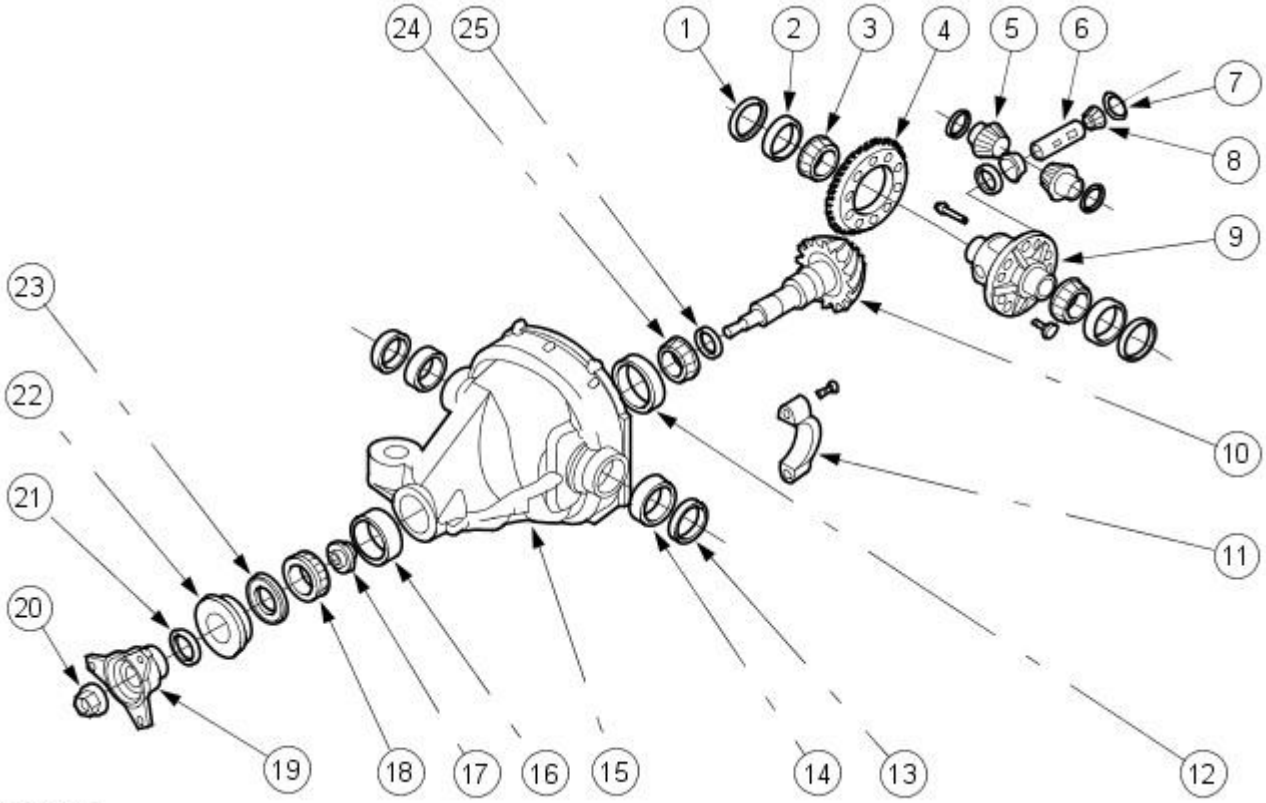


VUJ0000458

| Item | Part Number | Description |
|---|---|---|
| 1 | — | Differential bearing shim |
| 2 | — | Differential bearing cup |
| 3 | — | Differential bearing |
| 4 | — | Ring gear |
| 5 | — | Differential side gear |
| 6 | — | Differential pinion shaft |
| 7 | — | Differential pinion thrust washer |
| 8 | — | Differential pinion gear |
| 9 | — | Differential gear case |
| 10 | — | Pinion |
| 11 | — | Differential bearing cap |
| 12 | — | Rear axle pinion bearing cup |
| 13 | — | Output shaft oil seals |
| 14 | — | Differential pilot bearing |
| 15 | — | Differential housing |
| 16 | — | Differential drive pinion cup |
| 17 | — | Differential drive pinion collapsible spacer |
| 18 | — | Pinion bearing |
| 19 | — | Pinion flange |
| 20 | — | Pinion nut |
| 21 | — | Dust shield |
| 22 | — | Rear axle drive pinion seal |
| 23 | — | Rear axle pinion shaft oil slinger |
| 24 | — | Pinion Bearing |
| 25 | — | Drive pinion bearing adjustment shim |

The rear axle drive pinion receives power from the engine through the transmission and driveshaft. The drive pinion gear rotates the differential drive gear which is bolted to the differential housing outer flange. Inside the differential housing, two differential pinion gears are mounted on a differential shaft which is pinned to the differential housing. These differential pinion gears are engaged with the differential side gears to which the halfshafts are splined. As the differential gear turns, it rotates the halfshafts and rear wheels.

When it is necessary for one wheel and halfshaft to rotate faster than the other, the faster turning differential side gear causes the differential pinion gears to roll on the slower turning differential side gear. This allows differential action between the two halfshafts.

GETtheMANUALS.org

Published: 11-May-2011

# Rear Drive Axle / Differential - Rear Drive Axle and Differential

Diagnosis and Testing

For additional information, refer to Section 205-00 Driveline System - General Information

GETtheMANUALS.org

# Rear Drive Axle / Differential - Drive Pinion Seal

In-vehicle Repair

| Special Tool(s) | |
|---|---|
| 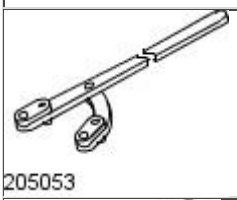 205053 | Flange holding tool<br><br>205-053 |
| 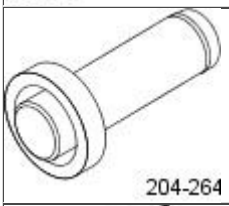 204-264 | Pinion seal installer<br><br>204-264 |
| 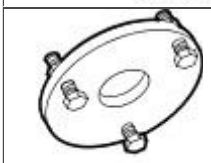 204-265 | Flange remover/replacer plate<br><br>204-265 |
| 204-266 | Flange remover/replacer boss<br><br>204-266 |
| 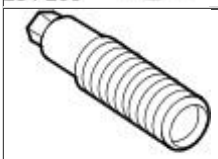 204-267 | Flange remover/replacer shaft center<br><br>204-267 |
| 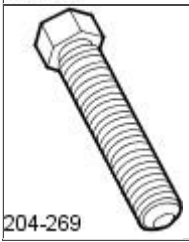 204-269 | Flange remover/replacer forcing screw<br><br>204-269 |

## Removal

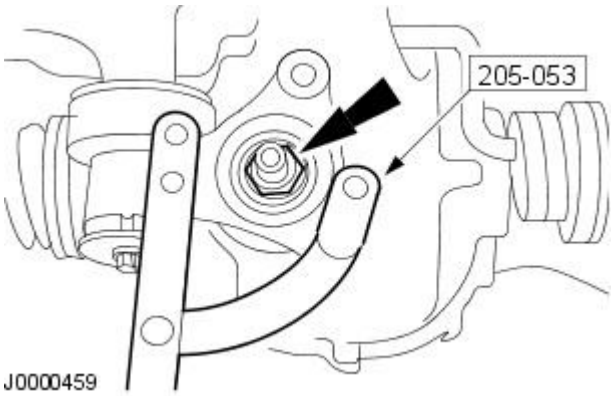


1. Remove the driveshaft.
   For additional information, refer to: Driveshaft (205-01 Driveshaft, Removal and Installation).

2. CAUTIONS:

   The following step must be carried out to make sure the correct drive pinion flange retaining nut torque is achieved.

   Only use a paint mark to match mark the drive pinion and flange.

   Remove the drive pinion flange nut.

   - Match mark the drive pinion nut to the drive pinion flange.
   - Match mark the drive pinion flange to the drive pinion shaft.
   - Loosen the drive pinion flange nut 180°.
   - Tighten the drive pinion flange nut to the match mark.
   - Note the force required to tighten to the match mark.
   - Remove the drive pinion flange nut.

GETtheMANUALS.org

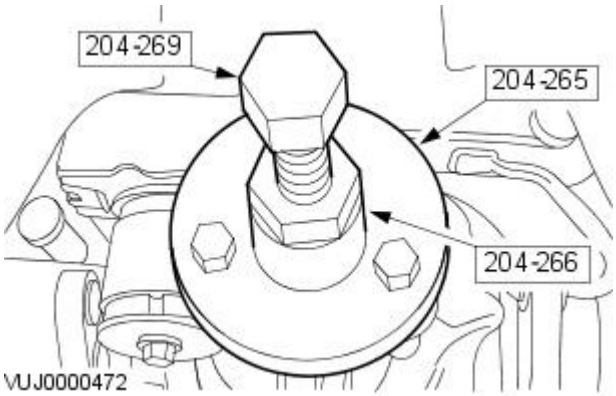


**3.** Using the special tools, remove the drive pinion flange.

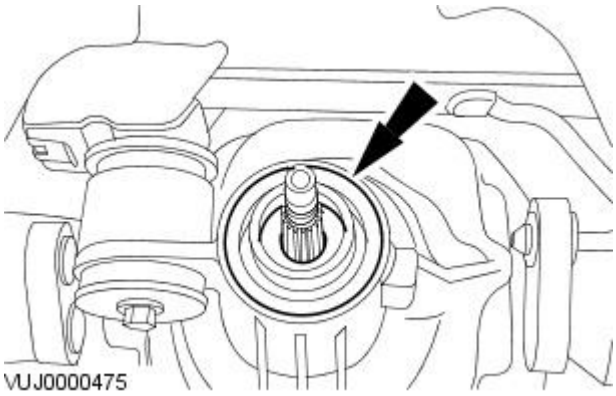


**4.** Remove the drive pinion seal dust cover.

**5.** Using a suitable tool, remove the drive pinion seal.

## Installation

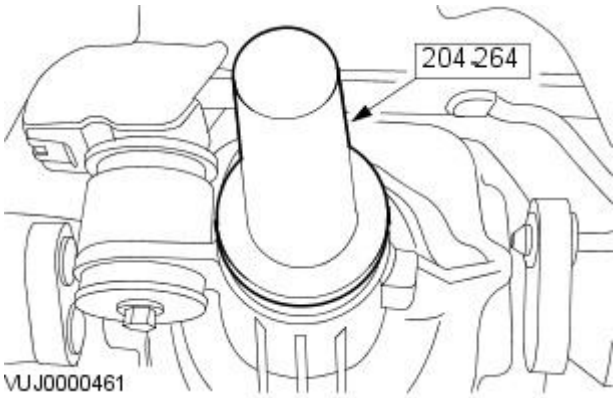


**1.** CAUTION: If the drive pinion seal becomes misaligned during installation, remove it and install a new one.

• NOTE: Check the rear drive axle pinion flange, rear axle housing and drive pinion splines for damage.

Using the special tool, install the drive pinion seal.

**2.** Install the drive pinion seal dust cover.

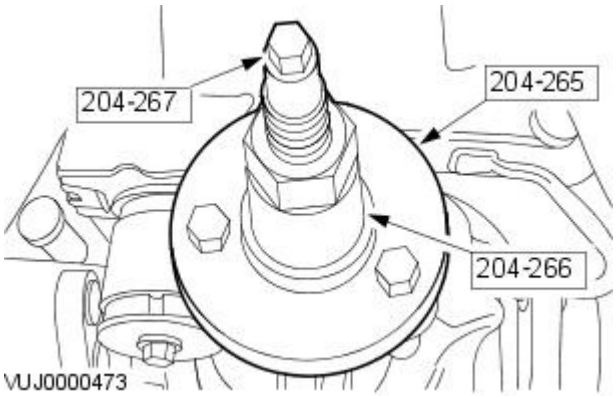


**3.** CAUTION: Only use the correct special tools to install the drive pinion flange.

Using the special tools, install the drive pinion flange.

GETtheMANUALS.org

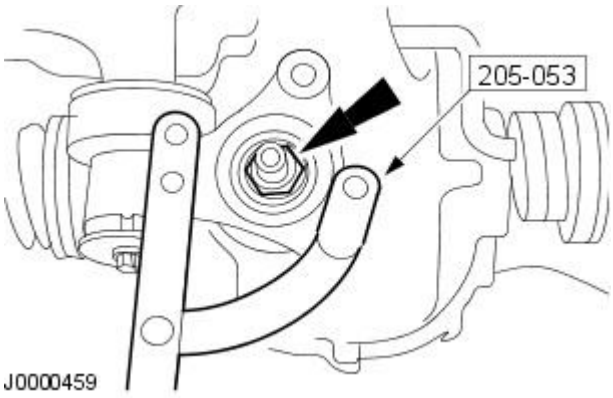


**4.** Install a new drive pinion flange nut.

- Tighten the drive pinion flange nut to the force noted on removal.
- Tighten the drive pinion flange nut to a further 10%.

**5.** CAUTION: Axle fluid should flow from the filler plug threaded hole when full. Failure to follow this instruction may result in damage to the axle.

Check and top up the axle assembly fluid level as required.

- NOTE: Install a new fluid level filler plug.

- Tighten to 34 Nm.

**6.** Install the driveshaft.
For additional information, refer to: Driveshaft (205-01 Driveshaft, Removal and Installation).

GETtheMANUALS.org

# Rear Drive Axle / Differential - Axle AssemblyVehicles Without: Differential Drain Plug

Removal and Installation

| Special Tool(s) | |
|---|---|
| 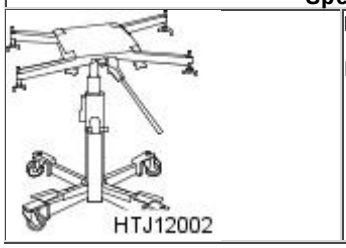 HTJ12002 | Powertrain assembly jack<br><br>HTJ1200-2 |

## Removal

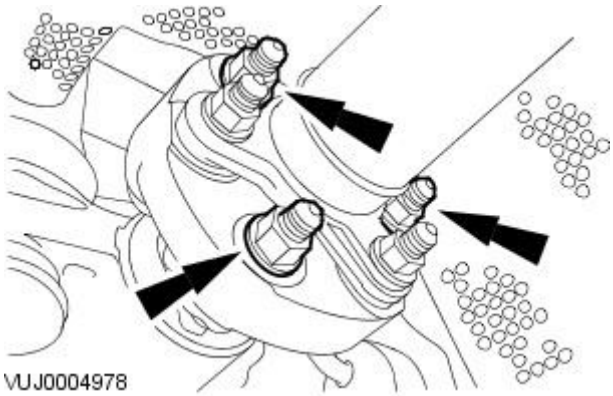
VUJ0004978

**1.** Remove both halfshafts.
For additional information, refer to: Rear Halfshaft (205-05 Rear Drive Halfshafts, Removal and Installation).

**2.** CAUTION: Under no circumstances must the flexible coupling (or its fixings) be loosened or removed from the driveshaft.

Detach the driveshaft from the differential flange.

- Mark the position of the driveshaft in relation to the differential flange.
- Mark the position of the balance nut in relation to the differential flange (if fitted).
- Mark the position of each nut and bolt in relation to the driveshaft flexible joint.

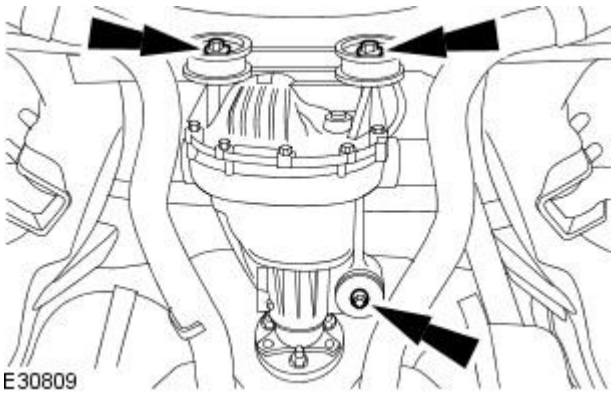
E30809

**3.** CAUTION: When supporting the axle assembly, use a suitable packing material to prevent damage to the axle assembly.

Using the special tool, support the axle assembly.

**4.** Remove the axle assembly.

## Installation

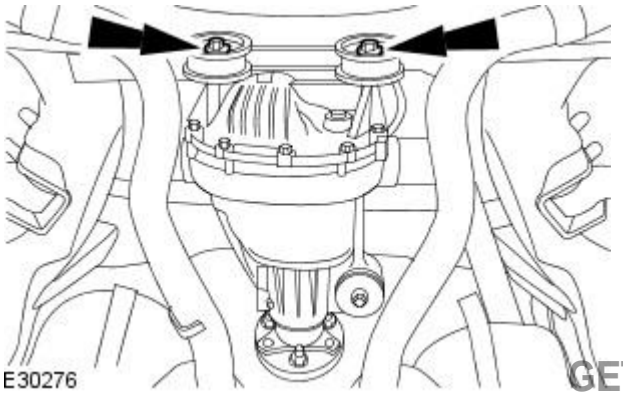
E30276

**1.** NOTE: Make sure the axle front retaining bolt washer and spacer are installed correctly.

• NOTE: Make sure the driveshaft nuts and bolts are installed correctly.

To install, reverse the removal procedure.

**2.** Tighten to 200 Nm.

GETtheMANUALS.org

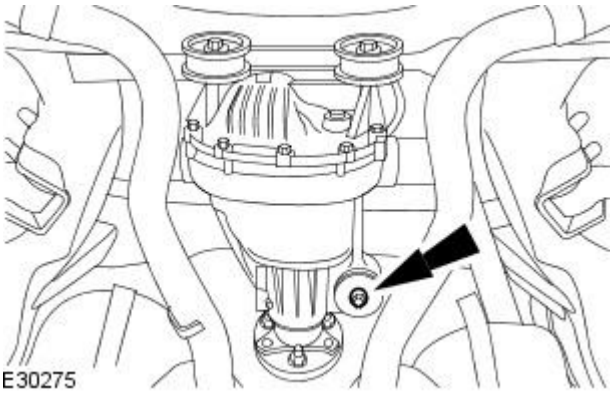


**3.** Tighten to 90 Nm.

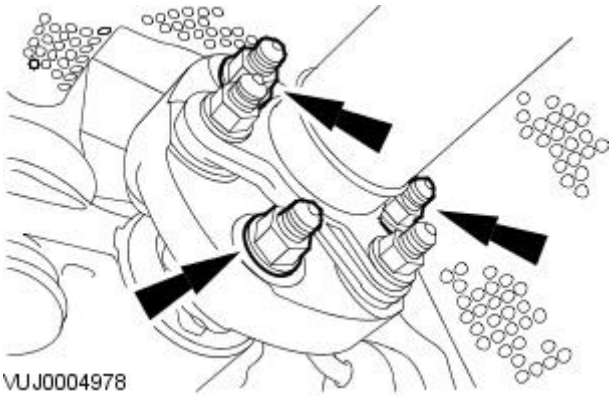


**4.** Tighten to 88 Nm.

GETtheMANUALS.org

# Rear Drive Axle / Differential - Axle Housing Bushing

Removal and Installation

| Special Tool(s) | |
|---|---|
| 204-275 | Forcing screw remover and installer<br><br>204-274 |
| 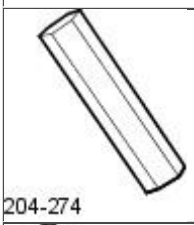 204-274 | Forcing screw remover and installer<br><br>204-274 |
| 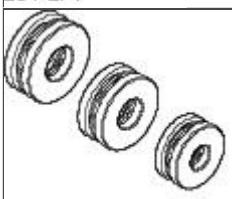 JAG-061 | Bearing kit<br><br>JAG-061 |
| 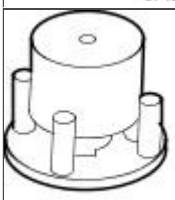 205-534 | Receiving Cup and mount plate<br><br>205-534 |
| 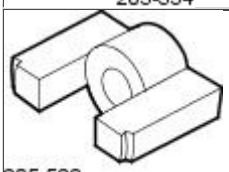 205-533 | Remover Front Mount Bush<br><br>205-533 |
| 204-245 | Installer front mount bush<br><br>204-245 |
| 204-243 | Installer Front Mount Bush<br><br>204-243 |

## Removal

1. Remove the axle assembly.
   For additional information, refer to Axle Assembly in this section.
2. Using the special tools, remove the axle housing bushing.

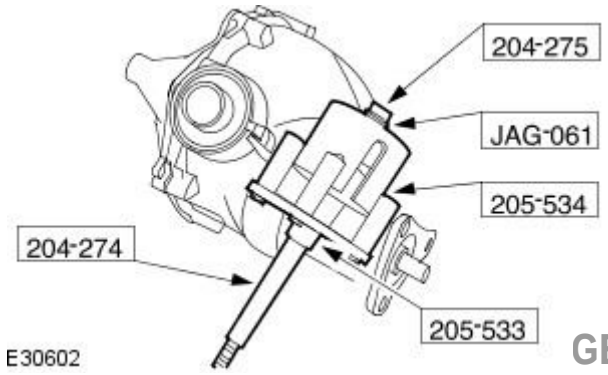


GETtheMANUALS.org

## Installation

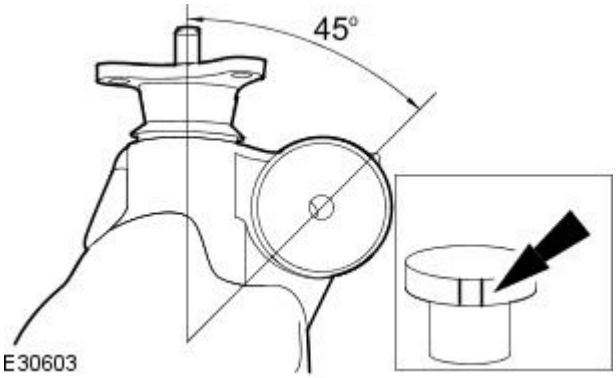


1. The bushing should be installed with the raised molding at 45 degrees to the centre line of the pinion shaft.

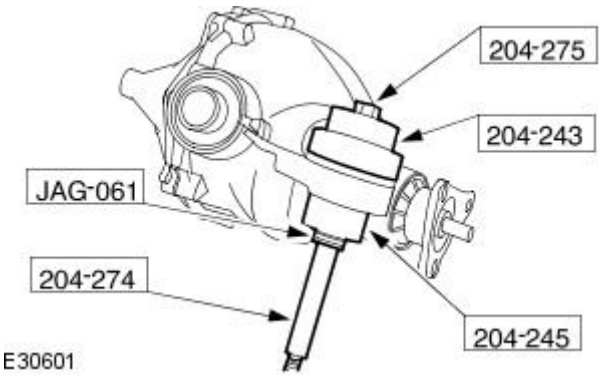


2. Using the special tools, install the axle housing bushing.

3. Install the axle assembly.
   For additional information, refer to Axle Assembly in this section.

GETtheMANUALS.org

# Rear Drive Halfshafts -

**Lubricants, Fluids, Sealers and Adhesives**

| Item | Specification |
|---|---|
| Constant velocity (CV) grease | Olistamoly LN 584 LO |
| Loctite 648 thread lock | WSK-M2G349-A4 |

**Fill Capacities**

| Description | Vehicle | Grams |
|---|---|---|
| Grease for inner CV joint boot | Vehicles with 2.5L engine | 100 |
| | Vehicles with 3.0L engine | 100 |
| | Vehicles with 4.2L engine without supercharger | 100 |
| | Vehicles with supercharger | - |
| Grease for inner CV joint | Vehicles with 2.5L engine | 40 |
| | Vehicles with 3.0L engine | 40 |
| | Vehicles with 4.2L engine without supercharger | 40 |
| | Vehicles with supercharger | 100 |
| Grease for outer CV joint boot | Vehicles with 2.5L engine | 85 |
| | Vehicles with 3.0L engine | 55 |
| | Vehicles with 4.2L engine without supercharger | 55 |
| | Vehicles with supercharger | - |
| Grease for outer CV joint | Vehicles with 2.5L engine | 50 |
| | Vehicles with 3.0L engine | 65 |
| | Vehicles with 4.2L engine without supercharger | 65 |
| | Vehicles with supercharger | 100 |

GETtheMANUALS.org

# Rear Drive Halfshafts - Rear Drive Halfshafts

Description and Operation

Rear Drive Halfshafts

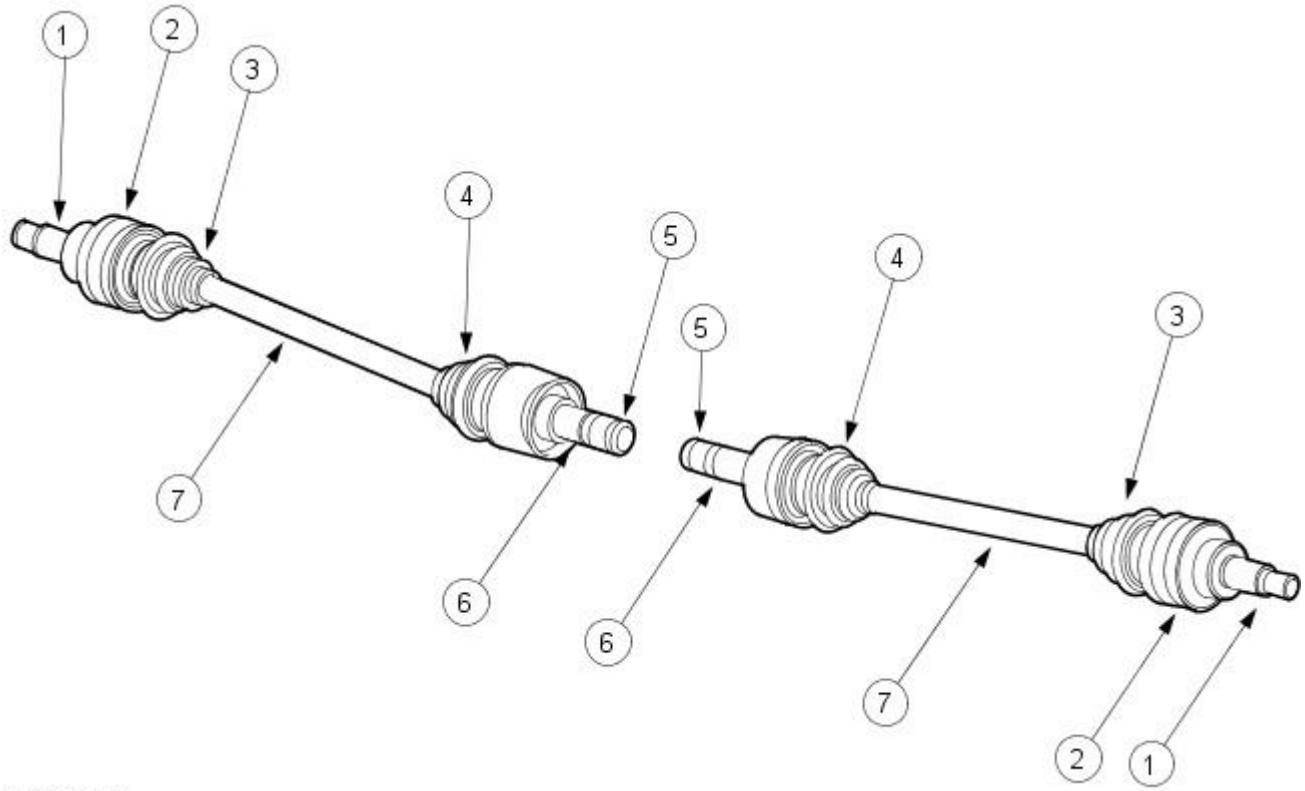


VUJ0005655

| Item | Part Number | Description |
|---|---|---|
| 1 | — | Outer constant velocity (CV) joint |
| 2 | — | Anti-lock brake system (ABS) ring |
| 3 | — | Outer CV joint boot |
| 4 | — | Inner CV joint boot |
| 5 | — | Spring clip |
| 6 | — | Inner CV joint |
| 7 | — | Halfshaft |

The rear drive halfshafts are of unequal lengths and both inner and outer joints are of the CV type.

The outer CV joints are fitted with an ABS ring which is continuously monitored by the wheel speed sensor.

The inner and outer CV joints are linked by a solid halfshaft. The inner CV joints are retained in the rear drive axle with the aid of a spring clip.

## Handling Rear Drive Halfshafts

The following points should be observed when handling rear drive halfshafts:

- Do not pull on the CV joints.
- Do not allow the CV joints to exceed 18 degrees of travel.
- Check polished surfaces and splines for damage.
- Do not allow the CV joint boots to come into contact with sharp edges, hot vehicle components or the exhaust system.
- Do not drop the rear drive halfshafts, this may cause damage to the splined sections of the CV joints, the threaded sections of the CV joints or the interior of the boots which may not be visible.
- Do not support the rear drive halfshaft by holding the CV joint alone.

## Underbody Protection and Corrosion Prevention

The CV joint boots should be covered during application of underbody protection or corrosion prevention. Foreign matter on the CV boots may cause premature ageing of the material. Foreign material on the rear drive halfshafts may cause imbalance.

GETtheMANUALS.org

Published: 11-May-2011

# Rear Drive Halfshafts - Rear Drive Halfshafts

Diagnosis and Testing

For additional information, refer to Section 205-00 Driveline System - General Information.

GETtheMANUALS.org

# Rear Drive Halfshafts - Rear Halfshaft

Removal and Installation

| Special Tool(s) | |
|---|---|
| 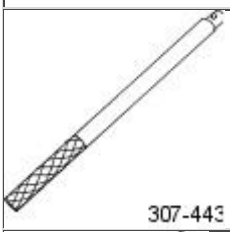 307-443 | Halfshaft splitter handle<br>307-443 |
| 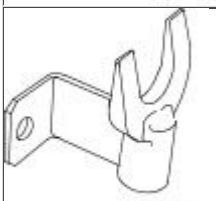 307-442 | Halfshaft splitter<br>307-442 |
| 205-532 | Halfshaft oil seal installer<br>205-532 |
| 205-461 | Halfshaft seal protector<br>205-461 |
| 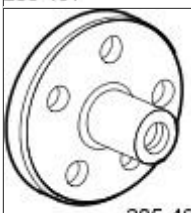 205-491 | Hub puller<br>205-491 |
| 20549101 | Adaptor nuts<br>205-491-01 |
| 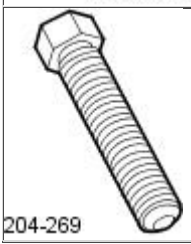 204-269 | Flange remover forcing screw<br>204-269 |

## Removal

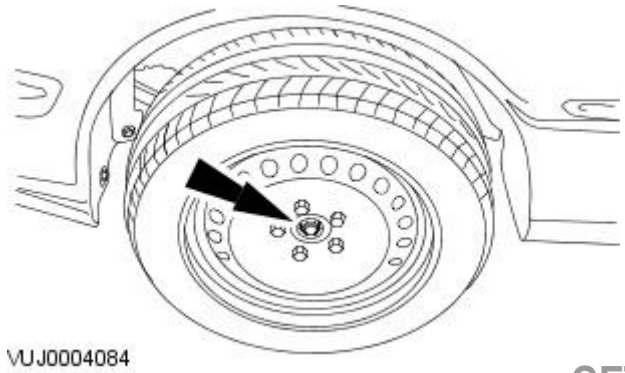


1. Loosen the wheel hub nut.

GETtheMANUALS.org

2. Remove the brake disc. For additional information, refer to:

Brake Disc - Vehicles With: Standard Brakes, VIN Range: G00442->G45170 (206-04, Removal and Installation),
Brake Disc - Vehicles With: High Performance Brakes, VIN Range: G00442->G45170 (206-04, Removal and Installation),
Brake Disc - VIN Range: N52048->N99999 (206-04 Rear Disc Brake, Removal and Installation).

**3.** Detach the anti-lock brake system (ABS) sensor.

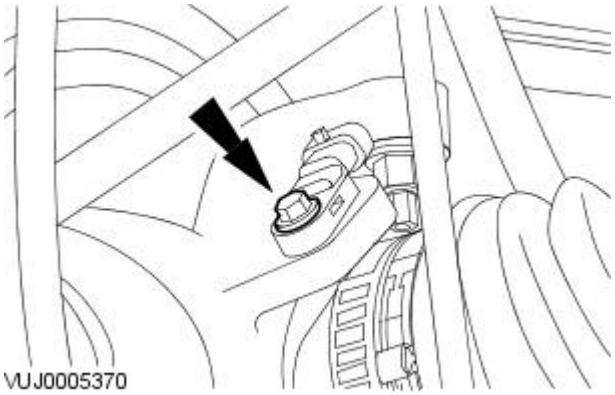


**4.** Detach the outer tie rod.

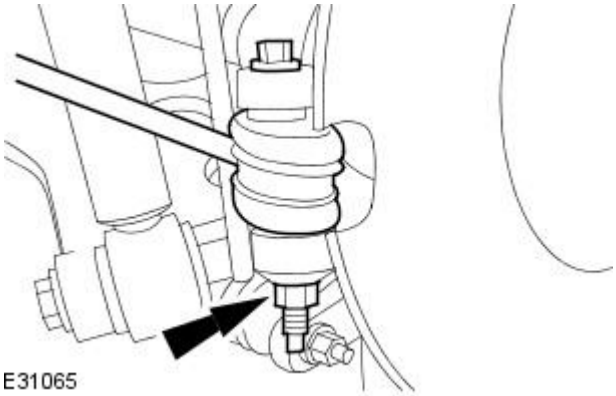


**5.** Detach the lower arm from the wheel knuckle.

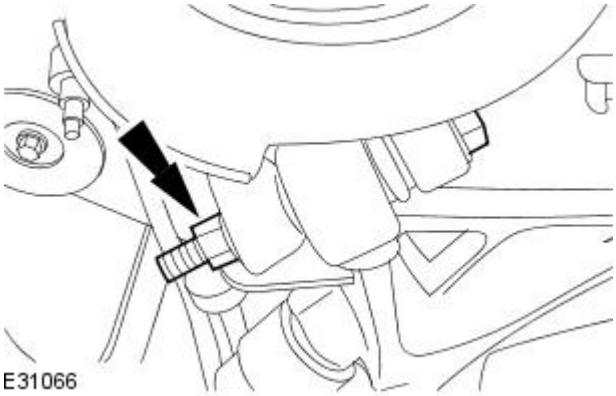


**6.** Remove the wheel hub nut.

**7.** Using the special tools, detach the halfshaft.

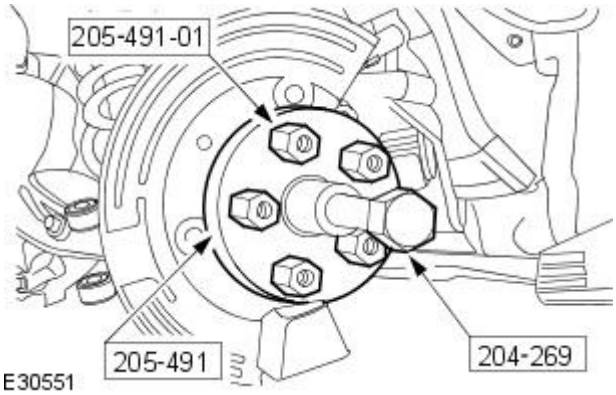


GETtheMANUALS.org

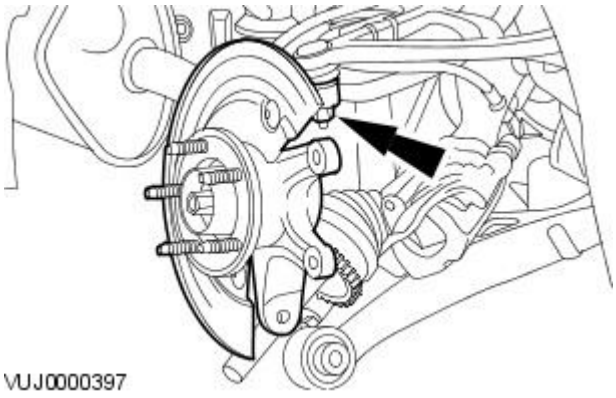


**8.** Remove the wheel knuckle assembly.

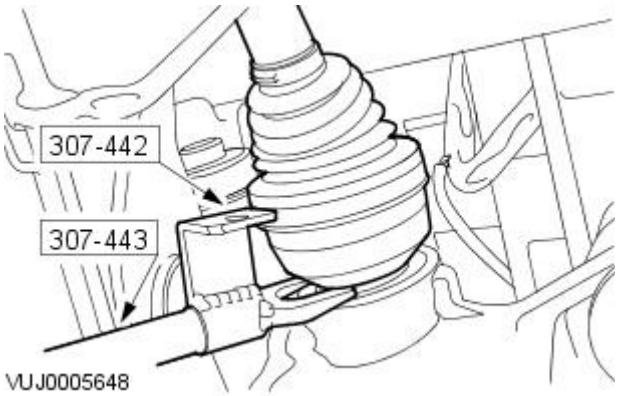


**9.** CAUTION: To avoid damage to the halfshaft constant velocity (CV) joints and boots, do not allow the CV joints to exceed 18 degrees of travel.

• NOTE: The halfshaft is retained in the axle assembly by a retaining clip.

Using the special tools, remove the halfshaft.

- Remove and discard the retaining clip.

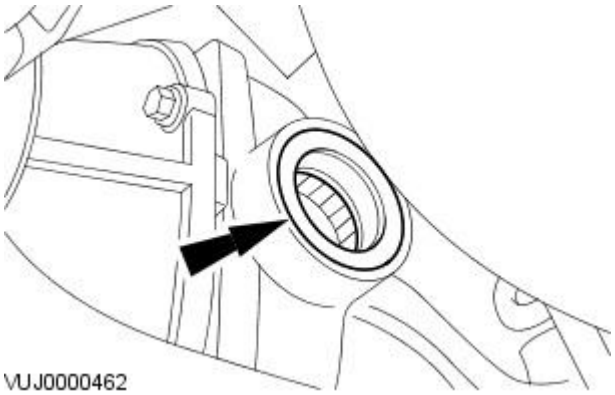


**10.** Remove the halfshaft seal.

## Installation

CAUTION: The final tightening of the rear suspension components must be carried out with the vehicle on its wheels.

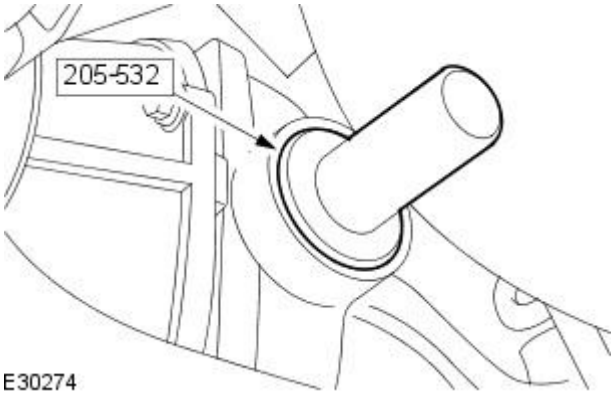


**1.** Using the special tool, install the halfshaft seal.

GETtheMANUALS.org

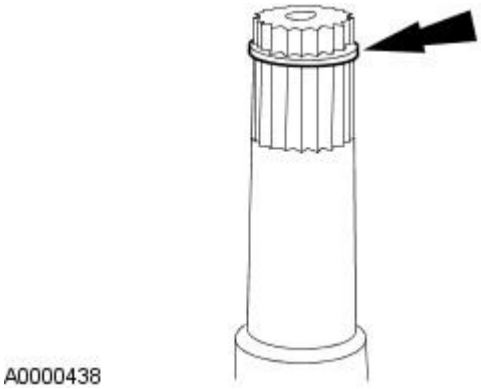


**2.** Install a new retaining clip.

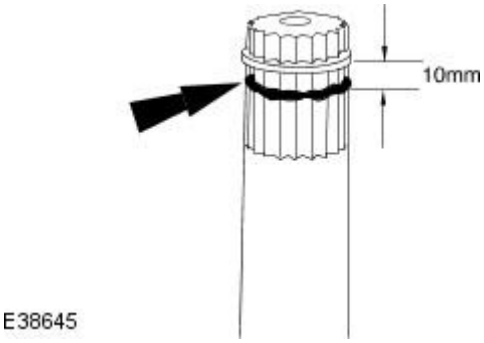


**3.** CAUTIONS:

The next four steps must be carried out within 5 minutes of applying the sealant.

Install the halfshaft within 5 minutes of applying the sealant.

Apply a 3mm diameter bead of Loctite WSK-M2G349-A4 or equivalent meeting Jaguar specification to the halfshaft splines.

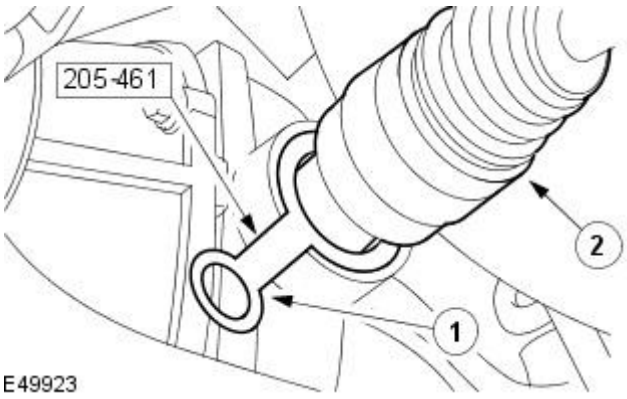


**4.** CAUTIONS:

Do not damage the axle shaft seal.

To avoid damage to the halfshaft CV joints and boots, do not allow the CV joints to exceed 18 degrees of travel.

Make sure no damage occurs to the halfshaft seal when installing the halfshaft.

- NOTE: Do not fully engage the halfshaft into the axle assembly.

Install the halfshaft.

1. Install the special tool to the halfshaft seal.
2. Install the halfshaft.

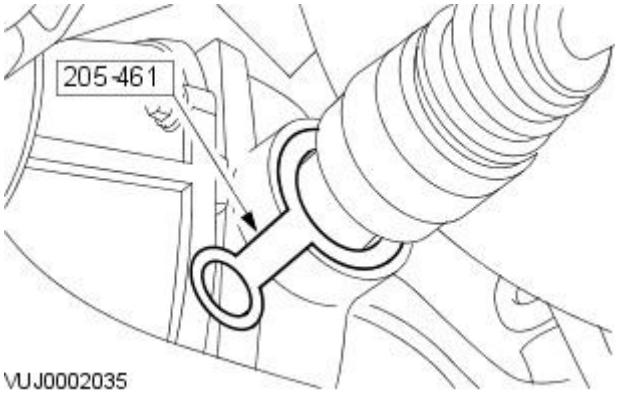


**5.** Remove the special tool.

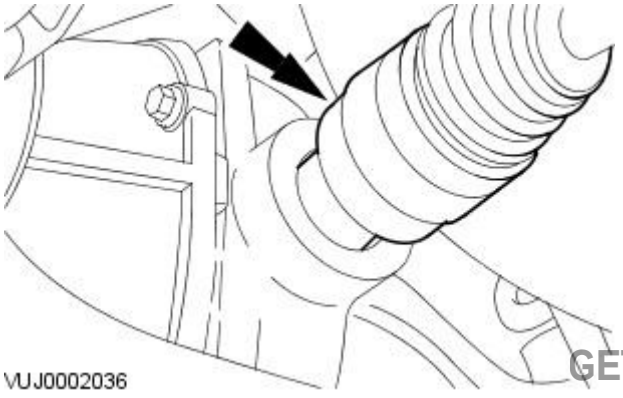


**6.** CAUTIONS:

To avoid damage to the halfshaft CV joints and boots, do not allow the CV joints to exceed 18 degrees of travel.

Make sure no damage occurs to the halfshaft seal when installing the halfshaft.

- NOTE: Make sure the retaining clip is correctly seated.

Attach the halfshaft.

GETtheMANUALS.org

**7.** CAUTION: Axle fluid should flow from the filler plug threaded hole when full. Failure to follow this instruction may result in damage to the axle.

Check and top up the axle assembly fluid level as required.

- NOTE: Install a new fluid level filler plug.

- Tighten to 34 Nm.

**8.** Install the wheel knuckle assembly.

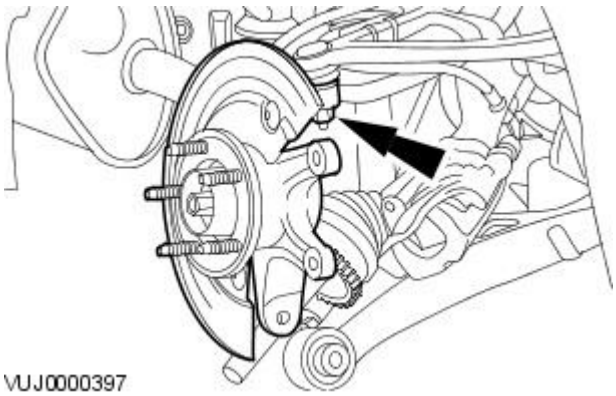


**9.** NOTE: Using the old wheel hub nut, tighten to 150 Nm.

Attach the wheel knuckle to the halfshaft.

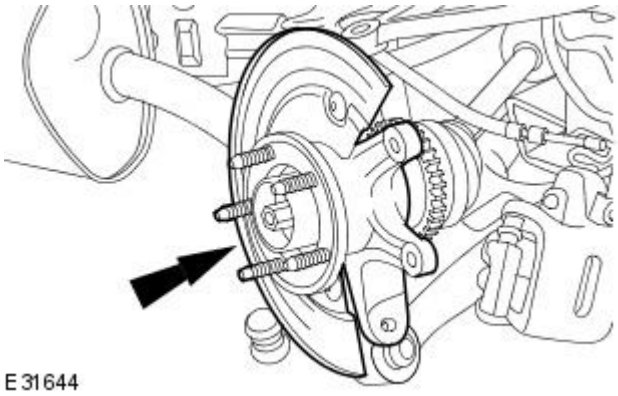


**10.** Install the lower arm to the wheel knuckle.

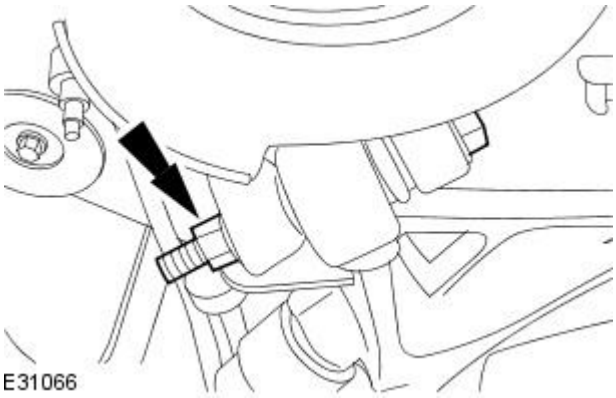


**11.** Install the outer tie rod retaining nut.

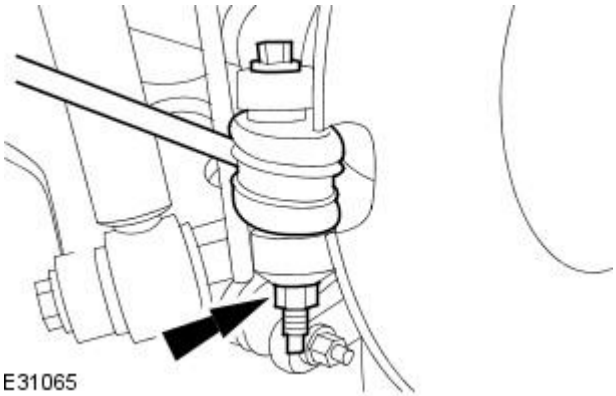


GETtheMANUALS.org

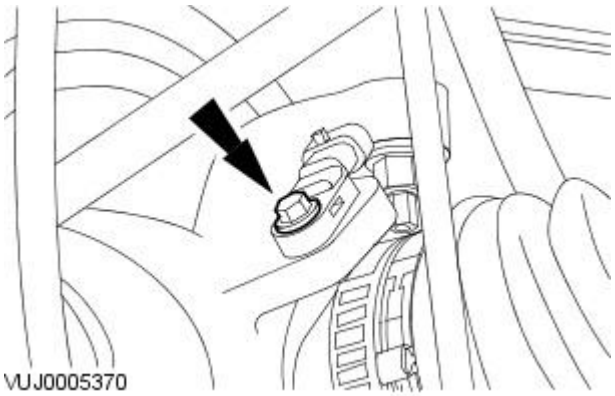


**12.** Install the ABS sensor.

- Tighten to 9 Nm.

**13.** Install the brake disc. For additional information, refer to:

Brake Disc - Vehicles With: Standard Brakes, VIN Range: G00442->G45170 (206-04, Removal and Installation),
Brake Disc - Vehicles With: High Performance Brakes, VIN Range: G00442->G45170 (206-04, Removal and Installation),
Brake Disc - VIN Range: N52048->N99999 (206-04 Rear Disc Brake, Removal and Installation).

or

For additional information, refer to: Brake Disc - VIN Range: N52048->N99999 (206-04 Rear Disc Brake, Removal and Installation).

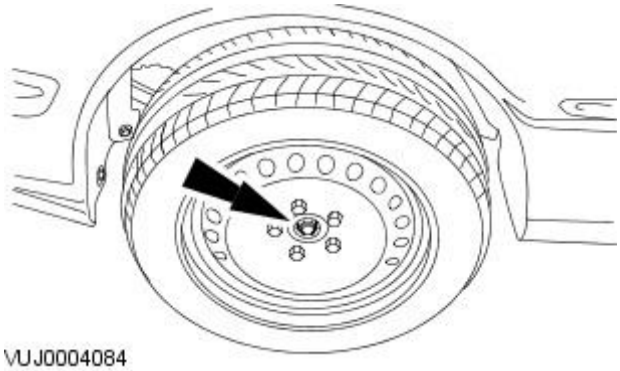


**14.** Remove and discard the old wheel hub nut, install a new wheel hub nut.

- Tighten to 300 Nm.

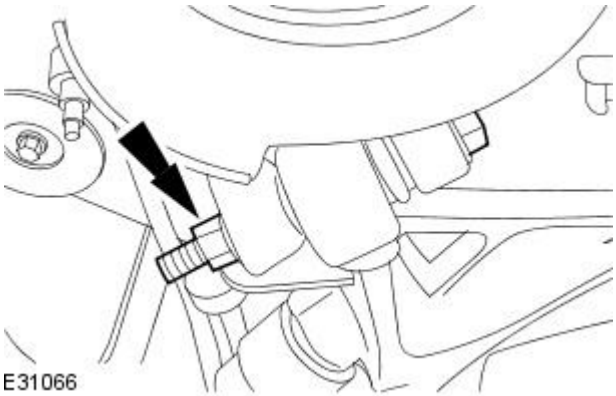


**15.** CAUTION: The final tightening of the rear suspension components must be carried out with the vehicle on its wheels.

Tighten to 150 Nm.

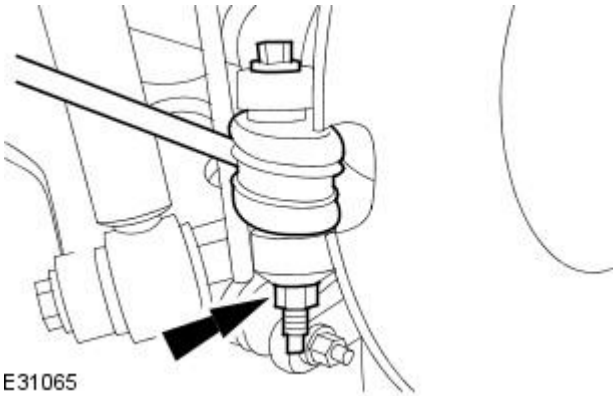


**16.** CAUTION: The final tightening of the rear suspension components must be carried out with the vehicle on its wheels.

Tighten to 55 Nm.

GETtheMANUALS.org

# Rear Drive Halfshafts - Inner Constant Velocity (CV) Joint Boot

Removal and Installation

## Removal

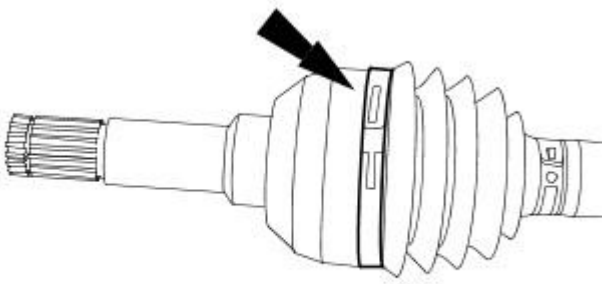

VUJ0005653

**1.** Remove the halfshaft.
For additional information, refer to Halfshaft in this section.

**2.** CAUTION: Use suitable protective covers to protect the halfshaft.

Using a suitable clamp, secure the halfshaft.

**3.** CAUTION: Make sure the inner constant velocity (CV) joint is not separated from the halfshaft.

Remove and discard the inner CV joint boot retaining clip.

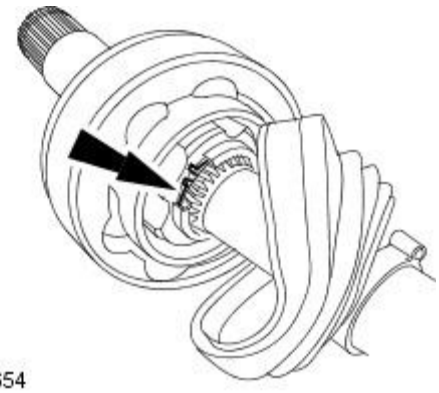

VUJ0005654

**4.** CAUTION: Make sure the CV joint ball bearings do not drop out of the CV joint.

Using a suitable tool, remove the inner CV joint.

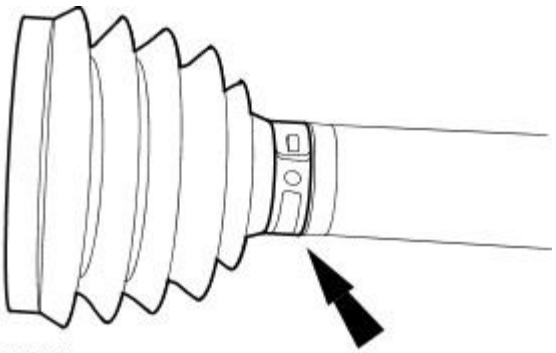

VUJ0005651

**5.** Remove the inner CV joint boot.

- Remove and discard the retaining clip.

## Installation

All vehicles

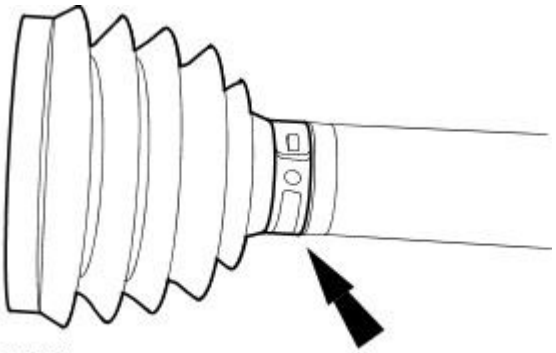

VUJ0005651

**1.** Install the inner CV joint boot.

- Install a new retaining clip.
- Using a suitable tool, install the retaining clip.

GETtheMANUALS.org

Vehicles with 2.5L engine

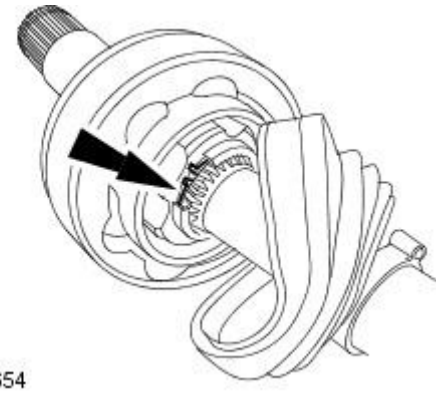

VUJ0005654

2. CAUTION: Make sure the CV joint ball bearings do not drop out of the CV joint.

• NOTE: Use a CV grease meeting Jaguar specification.

Fit the inner CV joint.

- Fill the CV joint with 40 grams of grease.
- Fill the CV joint boot with 100 grams of grease.

Vehicles with 3.0L engine

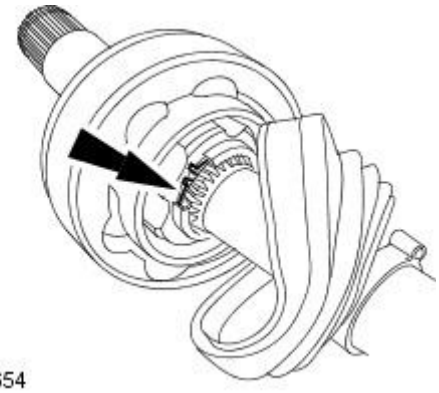

VUJ0005654

3. CAUTION: Make sure the CV joint ball bearings do not drop out of the CV joint.

• NOTE: Use a CV grease meeting Jaguar specification.

Fit the inner CV joint.

- Fill the CV joint with 40 grams of grease.
- Fill the CV joint boot with 100 grams of grease.

Vehicles with 4.2L engine without supercharger

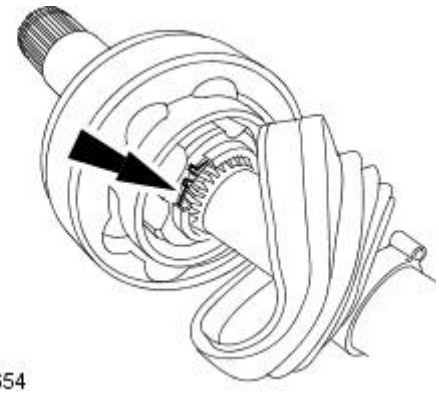

VUJ0005654

4. CAUTION: Make sure the CV joint ball bearings do not drop out of the CV joint.

• NOTE: Use a CV grease meeting Jaguar specification.

Fit the inner CV joint.

- Fill the CV joint with 40 grams of grease.
- Fill the CV joint boot with 100 grams of grease.

Vehicles with 4.2L engine with supercharger

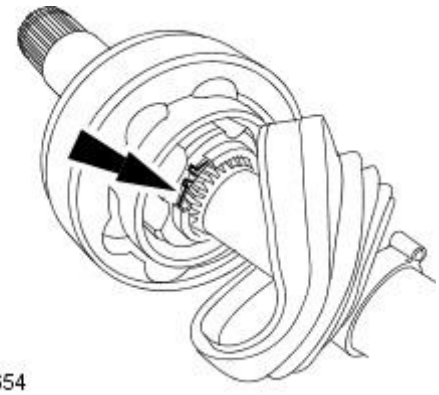

VUJ0005654

5. CAUTION: Make sure the CV joint ball bearings do not drop out of the CV joint.

• NOTE: Use a CV grease meeting Jaguar specification.

Fit the inner CV joint.

  • NOTE: Make sure grease is not applied inside the CV joint boot.

  • NOTE: Make sure grease is applied to the CV joint.

- Fill the CV joint with 100 grams of grease.

All vehicles

GETtheMANUALS.org

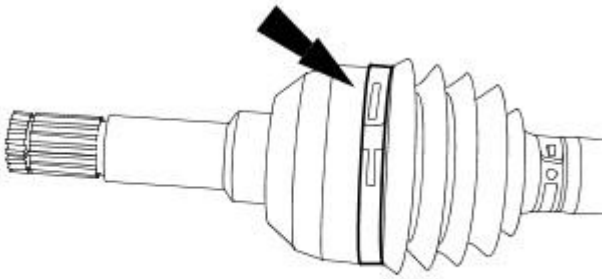

VUJ0005653

**6.** CAUTION: Make sure the CV joint is not separated from the halfshaft.

• NOTE: Make sure enough air is present in the CV boot.

Install a new retaining clip.

- Using a suitable tool, install the retaining clip.

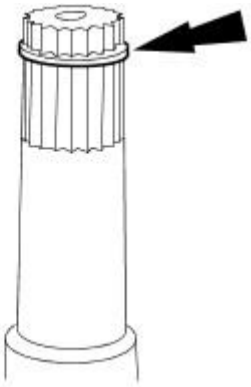

A0000438

**7.** Install a new retaining clip.

**8.** Remove the halfshaft from the clamp.

**9.** Install the halfshaft.
For additional information, refer to Halfshaft in this section.

GETtheMANUALS.org

# Rear Drive Halfshafts - Outer Constant Velocity (CV) Joint Boot

Removal and Installation

## Removal

**1.** Remove the Halfshaft.
For additional information, refer to Halfshaft in this section.

**2.** CAUTION: Use suitable protective covers to protect the halfshaft.

Using a suitable clamp, secure the halfshaft.

**3.** Remove the outer constant velocity (CV) joint boot retaining clip.

- Remove and discard the retaining clip.

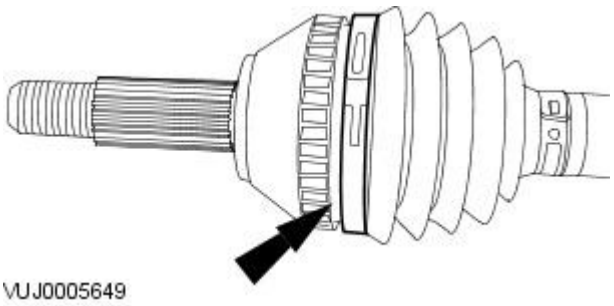

VUJ0005649

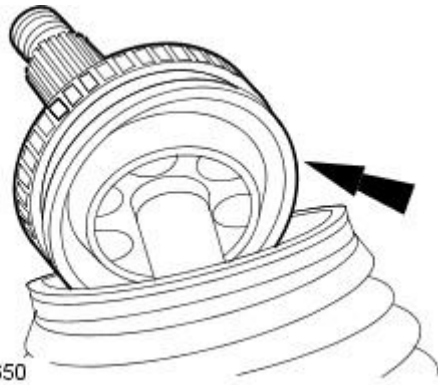

VUJ0005650

**4.** CAUTION: Do not damage the bearing retainer.

• NOTE: The outer CV joint is retained to the shaft by a spring clip.

Using a suitable brass drift, remove the outer CV joint.

**5.** Remove the retaining clip.

- Remove and discard the retaining clip.

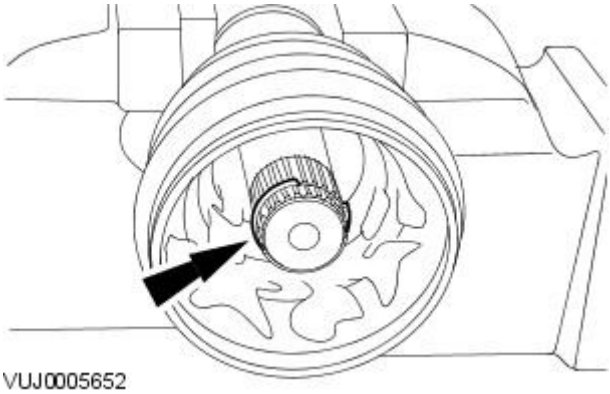

VUJ0005652

**6.** Remove the outer CV joint boot.

- Remove and discard the retaining clip.

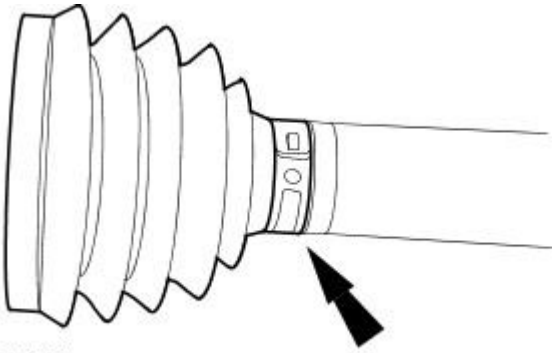

VUJ0005651

## Installation

All vehicles

GETtheMANUALS.org

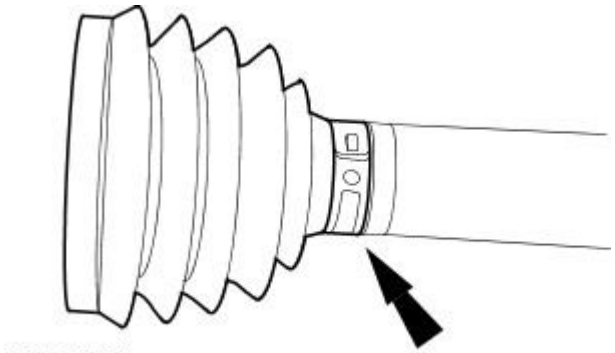


**1.** Install the outer CV joint boot.

- Install the new retaining clip.
- Using a suitable tool, install the retaining clip.

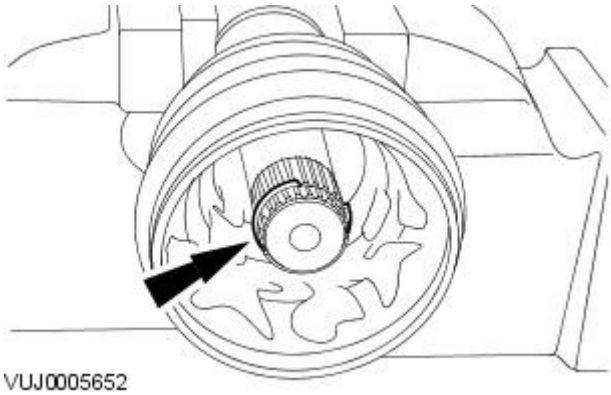


**2.** Install the new retaining clip.

Vehicles with 2.5L engine

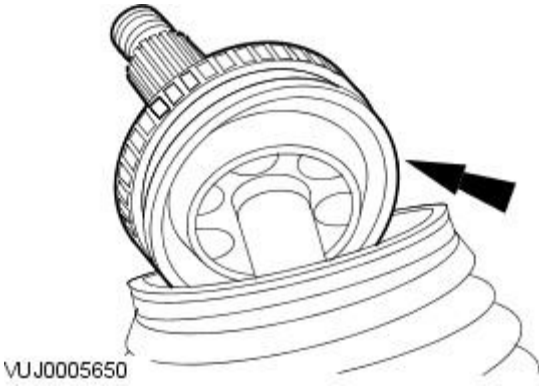


**3.** CAUTION: Make sure the CV joint ball bearings do not drop out of the CV joint.

• NOTE: Use a CV grease meeting Jaguar specification.

Fit the outer CV joint.

- Fill the CV joint with 50 grams of grease.
- Fill the CV joint boot with 85 grams of grease.

Vehicles with 3.0L engine

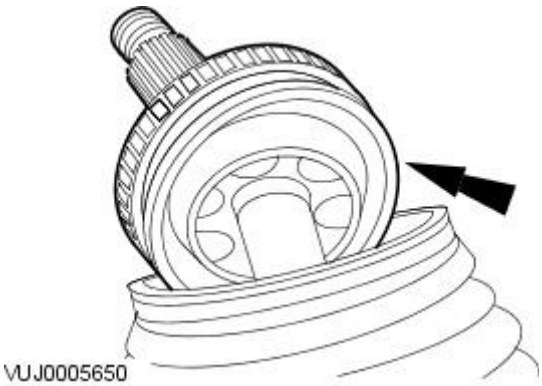


**4.** CAUTION: Make sure the CV joint ball bearings do not drop out of the CV joint.

• NOTE: Use a CV grease meeting Jaguar specification.

Fit the outer CV joint.

- Fill the CV joint with 55 grams of grease.
- Fill the CV joint boot with 65 grams of grease.

Vehicles with 4.2L engine without supercharger

GETtheMANUALS.org

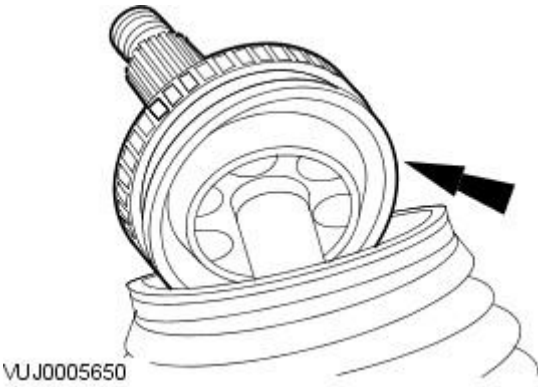


**5.** CAUTION: Make sure the CV joint ball bearings do not drop out of the CV joint.

• NOTE: Use a CV grease meeting Jaguar specification.

Fit the outer CV joint.

- Fill the CV joint with 55 grams of grease.
- Fill the CV joint boot with 65 grams of grease.

Vehicles with 4.2L engine with supercharger

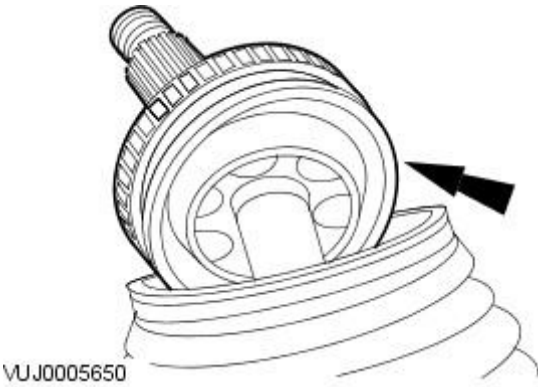


**6.** CAUTION: Make sure the CV joint ball bearings do not drop out of the CV joint.

• NOTE: Use a CV grease meeting Jaguar specification.

Fit the outer CV joint.

- • NOTE: Make sure grease is not applied inside the CV joint boot.
- • NOTE: Make sure grease is applied to the CV joint.
- Fill the CV joint with 100 grams of grease.

All vehicles

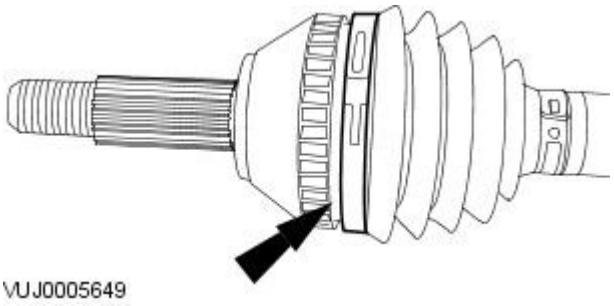


**7.** NOTE: Make sure enough air is present in the CV boot.

Install the new retaining clip.

- Using a suitable tool, install the retaining clip.

**8.** Remove the halfshaft from the clamp.

**9.** Install the halfshaft.
For additional information, refer to Halfshaft in this section.

GETtheMANUALS.org

# Brake System - General Information -

**Lubricants, Fluids, Sealers and Adhesives**

CAUTION: Do not use brake fluid ITT Super Dot 4 on 2006my vehicles onwards. Failure to follow this instruction may result in damage to the vehicle.

• NOTE: Brake fluid ITT Super Dot 4 has now been superseded by Shell ESL Super Dot 4 which is the Jaguar recommended brake fluid. Shell ESL Super Dot 4 can be used on all model years.

| Item | Specification |
|---|---|
| Brake fluid | ITT Super Dot 4 |
| Brake fluid | Shell ESL Super Dot 4 |

**Brake Lining and Disc Specifications**

| Item | Specification |
|---|---|
| Brake pad material nominal thickness - front - Vehicles with 2.5L, 2.7L Diesel, 3.0L or 4.2L engine | 10.75 mm (0.42 in) |
| Brake pad material minimum thickness - front - Vehicles with 2.5L, 2.7L Diesel, 3.0L or 4.2L engine | 2 mm (0.08 in) |
| Brake pad material nominal thickness - front - Vehicles with high performance brakes | 10.30 mm (0.41 in) |
| Brake pad material minimum thickness - front - Vehicles with high performance brakes | 2 mm (0.08 in) |
| Brake pad material nominal thickness - rear - Vehicles with 2.5L, 2.7L Diesel, 3.0L or 4.2L engine | 10.95 mm (0.43 in) |
| Brake pad material minimum thickness - rear - Vehicles with 2.5L, 2.7L Diesel, 3.0L or 4.2L engine | 2 mm (0.08 in) |
| Brake pad material nominal thickness - rear - Vehicles with high performance brakes | 8.90 mm (0.35 in) |
| Brake pad material minimum thickness - rear - Vehicles with high performance brakes | 2 mm (0.08 in) |
| Brake pad material nominal thickness - parking brake pads - Vehicles with high performance brakes | 5.50 mm (0.21 in) |
| Brake pad material minimum thickness - parking brake pads - Vehicles with high performance brakes | 1 mm (0.04 in) |
| Front brake disc diameter - Vehicles with 2.5L, 2.7L Diesel, 3.0L engine fitted with standard suspension components and vehicles with 4.2L engine USA and Canada | 300 mm (12 in) |
| Front brake disc diameter - Vehicles with 2.5L, 2.7L Diesel, 3.0L, 4.2L engine fitted with sport suspension components and vehicles with 4.2L engine Rest of world | 320 mm (12.8 in) |
| Front brake disc diameter - Vehicles with high performance brakes | 365 mm (14.6 in) |
| New front Brake disc nominal thickness - Vehicles with 2.5L, 2.7L Diesel, 3.0L or 4.2L engine | 30 mm (1.2 in) |
| New front brake disc nominal thickness - Vehicles with high performance brakes | 32 mm (1.28 in) |
| Worn brake disc discard thickness - Vehicles with 2.5L, 2.7L Diesel, 3.0L engine fitted with standard suspension components and vehicles with 4.2L engine USA and Canada | 28 mm (1.10 in) |
| Worn brake disc discard thickness - Vehicles with 2.5L, 2.7L Diesel, 3.0L, 4.2L engine fitted with sport suspension components and vehicles with 4.2L engine Rest of world | 28.4 mm (1.12 in) |
| Worn front brake disc discard thickness - Vehicles with high performance brakes | 30 mm (1.2 in) |
| Rear brake disc diameter - Vehicles with 2.5L, 2.7L Diesel, 3.0L or 4.2L engine | 288 mm (11.52 in) |
| Rear brake disc diameter - Vehicles with high performance brakes | 330 mm (13.2 in) |
| New rear brake disc nominal thickness - Vehicles with 2.5L, 2.7L Diesel, 3.0L or 4.2L engine | 20 mm (0.8 in) |
| New rear brake disc nominal thickness - Vehicles with high performance brakes | 15 mm (0.6 in) |
| Worn rear brake disc minimum thickness - Vehicles with 2.5L, 2.7L Diesel, 3.0L or 4.2L engine | 18.50 mm (0.73 in) |
| Worn rear brake disc minimum thickness - Vehicles with high performance brakes | 13 mm (0.52 in) |
| Maximum front and rear brake disc runout (installed) - Vehicles with 2.5L, 2.7L Diesel, 3.0L or 4.2L engine | 0.076 mm ( 0.003 in) |
| Maximum front brake disc runout (installed) - Vehicles with high performance brakes | 0.076 mm ( 0.003 in) |
| Maximum rear brake disc runout (installed) - Vehicles with high performance brakes | 0.076 mm ( 0.003 in) |
| Maximum front hub face runout (installed) | 0.015 mm ( 0.006 in) |
| Maximum rear hub face runout (installed) | 0.030 mm ( 0.012 in) |
| Front brake caliper piston diameter - twin piston - Vehicles with 2.5L, 2.7L Diesel, 3.0L or 4.2L engine | 38 mm (1.52 in) and 45 mm (1.8 in) |
| Rear brake caliper piston diameter - Vehicles with 2.5L, 2.7L Diesel, 3.0L or 4.2L engine | 43 mm (1.72 in) |
| Front brake caliper piston diameter - twin piston - Vehicles with high performance brakes | 38 mm (1.52 in) and 44 mm (1.8 in) |
| Rear brake caliper piston diameter - twin piston - Vehicles with high performance brakes | 28 mm (1.12 in) and 30 mm (1.2 in) |

GETtheMANUALS.org

# Brake System - General Information -

**Lubricants, Fluids, Sealers and Adhesives**

CAUTION: Do not use brake fluid ITT Super Dot 4 on 2006MY vehicles onwards. Failure to follow this instruction may result in damage to the vehicle.

• NOTE: Brake fluid ITT Super Dot 4 has now been superseded by Shell ESL Super Dot 4 which is the Jaguar recommended brake fluid. Shell ESL Super Dot 4 can be used on all model years.

| Item | Specification |
|---|---|
| Brake fluid | Shell ESL |

**Brake Lining and Disc Specifications**

| Item | Specification |
|---|---|
| Front brake disc diameter - Vehicles with standard brakes | 326 mm (12.8 in) |
| Front brake disc diameter - Vehicles with high performance brakes | 355 mm (14.0 in) |
| New front brake disc nominal thickness - Vehicles with standard brakes | 30 mm (1.18 in) |
| New front brake disc nominal thickness - Vehicles with high performance brakes | 32 mm (1.28 in) |
| Worn brake disc discard thickness - Vehicles with standard brakes | 28 mm (1.14 in) |
| Worn front brake disc discard thickness - Vehicles with high performance brakes | 30 mm (1.18 in) |
| Rear brake disc diameter | 326 mm (12.8 in) |
| New rear brake disc nominal thickness | 20 mm (0.79 in) |
| Worn rear brake disc minimum thickness | 18 mm (0.72 in) |
| Maximum front brake disc runout (installed) - Vehicles with standard brakes | 0.090 mm ( 0.004 in) |
| Maximum front brake disc runout (installed) - Vehicles with high performance brakes | 0.090 mm ( 0.004 in) |
| Maximum rear brake disc runout (installed) | 0.075 mm ( 0.003 in) |
| Maximum front hub face runout (installed) | 0.015 mm ( 0.0006 in) |
| Maximum rear hub face runout (installed) | 0.05 mm ( 0.002 in) |
| Front brake caliper piston diameter | 60 mm (2.36 in) |
| Rear brake caliper piston diameter | 45 mm (1.77 in) |

GETtheMANUALS.org

# Brake System - General Information - Brake SystemVIN Range: M45255->N52047

Description and Operation

WARNING: BRAKE DUST, IF INHALED CAN DAMAGE YOUR HEALTH. ALWAYS REMOVE BRAKE DUST USING A VACUUM BRUSH. DO NOT USE A COMPRESSED-AIR LINE TO DISPERSE BRAKE DUST INTO THE ATMOSPHERE. Failure to follow this instruction may result in personal injury.

• CAUTIONS:

Brake pads must always be replaced in axle sets.

Replacement of nuts and bolts: Various thread-locking devices are used on nuts and bolts throughout the vehicle. These devices restrict the number of times a nut or bolt can be used.
For additional information, refer to: General Service Information (100-00 General Information, Description and Operation).

The high performance brake caliper is aligned to the brake disc when it is first installed to the vehicle, therefore, care must be taken not to disturb this alignment. When removing the caliper; remove the bolts that secure the anchor bracket to the vertical link only. DO NOT loosen any other caliper bolts.

The braking system is a diagonally split, dual circuit design featuring front and rear disc brakes.

The hydraulic system provides separate circuits for each pair of diagonally opposed wheels (left front, right rear and right front, left rear).

The standard front brake caliper has two retaining bolts that attach the brake caliper to the anchor plate. These are of double, sliding piston type which makes sure equal effort is applied through both brake pads. The anchor plate is attached to the wheel knuckle with two bolts. The standard rear brake calipers are single pistoned floating caliper type, which also incorporates the park brake mechanism. The standard brake disc is manufactured from cast iron and is of the vented type. It is retained on the hub by two retaining clips and the wheel studs.

In vehicles fitted with high performance brakes, the front and rear brake calipers have two retaining bolts that attach the brake caliper to the wheel knuckle. These are four piston fixed type which makes sure that equal effort is applied through both brake pads.The rear brakes have separate brake calipers for the parking brake. The brake disc is manufactured from cast iron and is of the vented type. It is retained on the hub by two retaining clips and the wheel studs. The brake pads in all cases are asbestos free.

Braided steel brake hoses are now fitted to reduce expansion under braking pressure and are light weight design.

The brake master cylinder is of a tandem design and is linked to a brake booster to reduce the brake pedal effort. The tandem design will make sure that in the event of one brake circuit failure the other will remain fully operational. The brake booster operating rod is connected directly to the brake pedal.

The electric parking brake (EPB) control is located in the floor console and operates the rear brakes through a motor and cable system.

GETtheMANUALS.org

Published: 11-May-2011

# Brake System - General Information - Brake SystemVIN Range: N52048->N99999

Description and Operation

WARNING: Brake fluid contains polyglycol ethers and polyglycols. Avoid contact with the eyes. Wash hands thoroughly after handling, as prolonged contact may cause irritation and dermatitis. If brake fluid contacts the eyes, flush the eyes with cold water or eyewash solution and seek medical attention. If taken internally do not induce vomiting, seek immediate medical attention. Failure to follow these instructions may result in personal injury.

The braking system is a diagonally split, dual circuit design featuring front and rear disc brakes.

The hydraulic system provides separate circuits for each pair of diagonally opposed wheels (left front, right rear and right front, left rear).

The standard front brake caliper has two retaining bolts that attach the brake caliper to the anchor plate. These are of single, sliding piston type. The anchor plate is attached to the wheel knuckle with two bolts. The standard brake disc is manufactured from cast iron and is of the vented type. It is retained on the hub by two retaining clips and the wheel studs.

The high performance front brake caliper has two retaining bolts that attach the brake caliper to the anchor plate. These are of single, sliding piston type. The anchor plate is attached to the wheel knuckle with two bolts. The high performance brake disc is manufactured from cast iron and is of the vented type. It is retained on the hub by two retaining clips and the wheel studs.

The rear brake calipers are single pistoned floating caliper type, which also incorporates the park brake mechanism. In addition, the high performance caliper has a logo badge which has to be removed when changing the brake pads. The brake disc is manufactured from cast iron and is of the vented type. It is retained on the hub by two retaining clips and the wheel studs.

The brake pads in all cases are asbestos free.

Braided steel brake hoses are fitted to reduce expansion under braking pressure and are of a light weight design.

The brake master cylinder is of a tandem design and is linked to a brake booster to reduce the brake pedal effort. The tandem design will make sure that in the event of one brake circuit failure the other will remain fully operational. The brake booster operating rod is connected directly to the brake pedal.

The parking brake module is located in the luggage compartment behind the right-hand rear luggage compartment trim panel and operates the rear brakes through a motor and cable system.

GETtheMANUALS.org

# Brake System - General Information - Brake System

Diagnosis and Testing

Principles of Operations

The brake system operates by transferring effort applied to the brake pedal, by the driver to the brakes at each wheel.

The braking effort is distributed to each wheel, using a hydraulic system. The system is assisted using a vacuum brake booster that reduces pedal effort for a given hydraulic pressure. The parking brake operates on the rear wheels and is applied using a pull/push switch mounted on the floor console. The adjustable pedal system allows adjustment of the throttle, brake and clutch pedals by a switch fitted on the steering column shroud.

## Inspection and Verification

• NOTE: Prior to carrying out any diagnosis, make sure that the brake system warning indicator is functional.

Visually examine the front and rear wheel and tire assemblies for damage such as uneven wear patterns, tread worn out or sidewall damage. Verify the tires are the same size, type and, where possible, same manufacture. Replace the damaged wheel or excessively worn tire. For additional information, refer to Section 204-04 Wheels and Tires.

Wheels and tires must be cleared of any foreign matter and tire pressures adjusted to the correct specification.

If the tires exhibit uneven wear or feathering, the cause must be corrected. Check the steering and suspension components for damage or wear and, if necessary, check and adjust front wheel alignment. For additional information, refer to Section 204-00 Suspension System - General Information.

### Road Test

**Visual Inspection Chart**

| Mechanical | Electrical |
|---|---|
| Brake master cylinder | Parking brake actuator |
| Brake caliper piston(s) | Parking brake module |
| Parking brake caliper piston(s) | Parking brake switch |
| Brake discs | Damaged or corroded wiring harness |
| Wheel bearings | Brake master cylinder fluid level switch |
| Brake pads | Adjustable pedal motor |
| Power brake booster | Adjustable pedal switch |
| Brake pedal linkage | |
| Brake booster vacuum hose | |
| Tires | |
| Debris | |
| Adjustable pedal drive cables | |

Carry out a road test to compare actual vehicle braking performance with the performance standards expected by the driver. The ability of the test driver to make valid comparisons and detect performance deficiencies will depend on experience.

The driver should have a thorough knowledge of brake system operation and accepted general performance guidelines to make good comparisons and detect performance concerns.

An experienced brake technician will always establish a route that will be used for all brake diagnosis road tests. The roads selected will be reasonably smooth and level. Gravel or bumpy roads are not suitable because the surface does not allow the tires to grip the road equally. Crowned roads should be avoided because of the large amount of weight shifted to the low set of wheels on this type of road. Once the route is established and consistently used, the road surface variable can be eliminated from the test results.

Before a road test, obtain a complete description of the customer concerns or suspected condition. From the description, the technician's experience will allow the technician to match possible causes with symptoms. Certain components will be tagged as possible suspects while others will be eliminated by the evidence. More importantly, the customer description can reveal unsafe conditions which should be checked or corrected before the road test. The description will also help form the basic approach to the road test by narrowing the concern to specific components, vehicle speed or conditions.

Begin the road test with a general brake performance check. Keeping the description of the concern in mind, test the brakes at different vehicle speeds using both light and heavy pedal pressure. To determine if the concern is in the front or rear braking system, use the brake pedal and then use the parking brake control. If the condition (pull, vibration, pulsation) occurs only with the parking brake, the concern is in the rear brake system.

If the concern becomes evident during this check, verify it fits the description given before the road test. If the concern is not evident, attempt to duplicate the condition using the information from the description.

If a concern exists, use the Symptom Chart in order to isolate it to a specific sub-system and condition description. From this description, a list of possible sources can be used to further narrow the cause to a specific component or condition.

**Symptom Chart**

| Symptom | Possible Sources | Action |
|---|---|---|
| Brakes noisy | * Brake pads.<br>* Brake discs. | * GO to Pinpoint Test A. |
| Vibration when brakes are applied | * Wheels require balancing.<br>* Wheel hub nuts.<br>* Brake caliper mounting bolts.<br>* Brake pads.<br>* Foreign material/scratches/corrosion on brake disc contact surfaces.<br>* Excessive brake disc thickness variation.<br>* Excessive brake disc runout.<br>* Wheel bearing wear or failure.<br>* Suspension bush wear or failure.<br>* Steering bush wear or failure. | * Go to Pinpoint Test B. |
| The brakes pull or drift | * Tire pressures/wear.<br>* Brake calipers.<br>* Brake pads.<br>* Brake discs. | * GO to Pinpoint Test C. |

GETtheMANUALS.org

| | | |
|---|---|---|
| | * Wheel alignment adjustment.<br>* Wheel bearing.<br>* Suspension bushes and ball joints. | |
| The pedal feels spongy | * Air in brake system.<br>* Leak in hydraulic system.<br>* Brake booster/master cylinder.<br>* Brake pads. | * GO to Pinpoint Test D. |
| The pedal goes down fast | * Air in brake system.<br>* Leak in hydraulic system.<br>* Brake booster/master cylinder.<br>* Brake pads. | * GO to Pinpoint Test E. |
| The pedal goes down slowly | * Air in brake system.<br>* Brake booster/master cylinder. | * Go to Pinpoint Test F. |
| Excessive brake pedal effort | * Brake pads.<br>* Brake booster. | * GO to Pinpoint Test G. |
| Brake lockup during light brake pedal force | * Brake pads.<br>* Brake calipers. | * GO to Pinpoint Test H. |
| Brakes drag | * Parking brake control applied/malfunction.<br>* Seized parking brake cables.<br>* Seized caliper slide pins.<br>* Seized brake caliper.<br>* Brake booster.<br>* Pedal gear. | * GO to Pinpoint Test I. |
| Excessive/Erratic brake pedal travel | * Hydraulic system.<br>* Brake pads.<br>* Brake discs.<br>* Hub and bearing assembly. | * GO to Pinpoint Test J. |
| The red brake warning indicator is always on | * Fluid level. | * FILL the system to specification. CHECK for leaks. |
| | * Brake fluid level sensor. | * INSTALL a new brake master cylinder fluid reservoir. For additional information, refer to Section 206-06 Hydraulic Brake Actuation. |
| | * Parking brake control. | * For additional information, REFER to Section 206-05 Parking Brake and Actuation. |
| | * Electrical circuit. | * For additional information, REFER to Section 206-05 Parking Brake and Actuation. |
| Slow or incomplete brake pedal return | * Brake pedal binding.<br>* Brake booster/master cylinder. | * GO to Pinpoint Test K. |

| **PINPOINT TEST A : BRAKES NOISY** | |
|---|---|
| **TEST CONDITIONS** | **DETAILS/RESULTS/ACTIONS** |
| **A1: INSPECT BRAKE PADS** | |
| | 1 Inspect the condition of the front and rear brake pads. Check for damage to any anti-squeal shims. |
| | Are the brake pads OK?<br>**Yes**<br>GO to A2.<br>**No**<br>CLEAN the front brake pads or INSTALL new front brake pads if necessary. For additional information, refer to Section 206-03 Front Disc Brake. CLEAN the rear brake pads or INSTALL new rear brake pads if necessary. For additional information, refer to Section 206-04 Rear Disc Brake. Test vehicle for presence of brake squeal. |
| **A2: INSPECT BRAKE DISCS** | |
| | 1 Inspect the brake discs for excessive corrosion, wear or disc thickness variation. |
| | Does excessive corrosion, wear or disc thickness variation exist?<br>**Yes**<br>INSTALL new front brake discs and brake pads. For additional information, refer to Section 206-03 Front Disc Brake.<br>INSTALL new rear brake discs and brake pads. For additional information, refer to Section 206-04 Rear Disc Brake.<br>TEST the system for normal operation.<br>**No**<br>Vehicle is OK. |

| **PINPOINT TEST B : VIBRATION WHEN BRAKES ARE APPLIED** | |
|---|---|
| **TEST CONDITIONS** | **DETAILS/RESULTS/ACTIONS** |
| **B1: ROAD TEST VEHICLE** | |
| | 1 Road test the vehicle between 40-80 km/h (25-50 mph) without applying brakes. |
| | Is the vibration present?<br>**Yes**<br>TEST for noise vibration and harshness. For additional information, refer to Section 100-04 Noise, Vibration and Harshness. REPEAT road test if necessary.<br>**No**<br>GO to B2. |
| **B2: CHECK FOR BRAKE VIBRATION** | |
| | 1 Road test the vehicle between 40-80 km/h (25-50 mph) with light and medium application on the brake pedal. |
| | Is a vibration present?<br>**Yes**<br>CHECK the brake caliper mounting bolts and wheel hub nuts and TIGHTEN as necessary. CHECK the balance of all road wheels and REPAIR as necessary. CHECK the brake discs for excessive wear, runout, thickness variation or cracks. REFER to Brake Disc Runout Check in this section.<br>INSTALL new brake discs and brake pads as necessary. GO to B3.<br>**No**<br>Vehicle is OK. |
| **B3: IS VIBRATION STILL PRESENT UNDER BRAKE APPLICATION?** | |
| | 1 Road test the vehicle between 40-80 km/h (25-50 mph) with light and medium application on the brake pedal. |
| | Is a vibration present?<br>**Yes**<br>CHECK for wear or failure of steering bushes. For additional information, refer to Section 211-02 Power Steering. CHECK for wear or failure of steering ball joints. For additional information, refer to Section 211-03 Steering Linkage. CHECK |

GETtheMANUALS.org

| | |
|---|---|
| | for wear or failure of front wheel bearings, suspension bushes and ball joints. For additional information, refer to Section 204-01 Front Suspension. CHECK for wear or failure of rear wheel bearings, suspension bushes and ball joints. For additional information, refer to Section 204-02 Rear Suspension.<br>**No**<br>Vehicle is OK. |

| PINPOINT TEST C : THE BRAKES PULL OR DRIFT | |
|---|---|
| **TEST CONDITIONS** | **DETAILS/RESULTS/ACTIONS** |
| **C1: ROAD TEST VEHICLE** | |
| | 1 Road test the vehicle and apply the brake pedal. |
| | Does the vehicle pull or drift?<br>**Yes**<br>GO to C2.<br>**No**<br>Vehicle is OK. |
| **C2: INSPECT TIRE PRESSURE** | |
| | 1 Check for excessive tire wear or incorrect pressures. |
| | Are the tires at the correct pressure and in good condition?<br>**Yes**<br>GO to C3.<br>**No**<br>ADJUST the tire pressures or INSTALL new tires if excessively worn. TEST the system for normal operation. |
| **C3: CHECK CALIPERS** | |
| | 1 Check the front brake caliper pistons for binding, leaking or sticking. For additional information, refer to Section 206-03 Front Disc Brake. Check the rear brake caliper pistons for binding, leaking or sticking. For additional information, refer to Section 206-04 Rear Disc Brake. |
| | Do the disc brake caliper pistons and pins bind, leak or stick?<br>**Yes**<br>INSTALL new brake calipers as necessary. TEST the system for normal operation.<br>**No**<br>GO to C4. |
| **C4: INSPECT BRAKE DISCS** | |
| | 1 Check the brake discs for excessive damage, thickness variation or runout. For additional information, refer to General Procedures. |
| | Does excessive damage or runout exist?<br>**Yes**<br>INSTALL new brake discs and brake pads as necessary. TEST the system for normal operation.<br>**No**<br>GO to C5. |
| **C5: INSPECT THE FRONT HUB AND WHEEL BEARING ASSEMBLY** | |
| | 1 Check the front hub and wheel bearing assembly. For additional information, refer to Section 204-00 Suspension System - General Information. |
| | Are the wheel bearings OK?<br>**Yes**<br>GO to C6.<br>**No**<br>INSTALL new wheel bearings. For additional information, refer to Section 204-01 Front Suspension. TEST the system for normal operation. |
| **C6: CHECK SUSPENSION BUSHES AND BALL JOINTS.** | |
| | 1 Check all suspension bushes and ball joints. |
| | Are the suspension bushes and ball joints OK?<br>**Yes**<br>GO to C7.<br>**No**<br>INSTALL new front suspension bushes and ball joints as required. For additional information, refer to Section 204-01 Front Suspension. INSTALL new rear suspension bushes and ball joints as required. For additional information, refer to Section 204-02 Rear Suspension. |
| **C7: CHECK VEHICLE ALIGNMENT** | |
| | 1 Check the vehicle alignment. For additional information, refer to Section 502-00 Uni-Body, Subframe and Mounting System. |
| | Is the alignment within specification?<br>**Yes**<br>Vehicle is OK.<br>**No**<br>Adjust the alignment as necessary. For additional information, refer to Section 502-00 Uni-Body, Subframe and Mounting System. |

| PINPOINT TEST D : THE PEDAL FEELS SPONGY | |
|---|---|
| **TEST CONDITIONS** | **DETAILS/RESULTS/ACTIONS** |
| **D1: CHECK FOR SPONGY PEDAL (ENGINE OFF)** | |
| | 1 Check for a firm brake pedal. |
| | Is the brake pedal effort and brake pedal travel normal?<br>**Yes**<br>Vehicle is OK.<br>**No**<br>GO to D2. |
| **D2: CHECK BRAKE PEDAL RESERVE (ENGINE OFF)** | |
| | 1 Pump the brake pedal 10 times and hold on the final application. |
| | Does the brake pedal feel firm on final application?<br>**Yes**<br>GO to D3.<br>**No**<br>BLEED the brake system. For additional information, refer to General Procedures. TEST the system for normal operation. |
| **D3: CHECK BRAKE PEDAL RESERVE (ENGINE ON)** | |
| | 1 Engine is idle. |

GETtheMANUALS.org

| | |
|---|---|
| | 2 Apply the brake pedal lightly three or four times. |
| | 3 Wait 15 seconds for the vacuum to recover. |
| | 4 Push down on the brake pedal until it stops moving downward or an increased resistance to the brake pedal travel occurs. |
| | 5 Hold the brake pedal in the applied position while increasing the engine speed to 2000 revs/min. |
| | 6 Release the accelerator pedal. |
| | Does the brake pedal move downward as the engine speed returns to idle?<br>**Yes**<br>GO to D4.<br>**No**<br>CHECK the vacuum to brake booster. For additional information, refer to Section 206-07 Power Brake Actuation. |
| **D4: CHECK BRAKE FLUID LEVEL** | |
| | 1 Check the brake master cylinder reservoir fluid level. |
| | Is the fluid level OK?<br>**Yes**<br>BLEED the brake system. For additional information, refer to General Procedures. TEST the system for normal operation.<br>**No**<br>CHECK brake master cylinder reservoir sealing points. For additional information, refer to Brake Master Cylinder in this section. ADD fluid and BLEED the brake system. For additional information, refer to General Procedures. TEST the system for normal operation. REPEAT road test if necessary. |

| **PINPOINT TEST E : THE PEDAL GOES DOWN FAST** | |
|---|---|
| **TEST CONDITIONS** | **DETAILS/RESULTS/ACTIONS** |
| **E1: ROAD TEST VEHICLE** | |
| | 1 Road test and apply the brake pedal. |
| | Is the brake pedal effort and brake pedal travel normal?<br>**Yes**<br>Vehicle is OK.<br>**No**<br>GO to E2. |
| **E2: CHECK BRAKE FLUID LEVEL** | |
| | 1 Check the brake master cylinder reservoir fluid level. |
| | Is the fluid level within specification?<br>**Yes**<br>GO to E3.<br>**No**<br>CHECK the brake master cylinder reservoir sealing points. For additional information, refer to Brake Master Cylinder Component Test in this section. ADD fluid and BLEED brake system. For additional information, refer to General Procedures. TEST the system for normal operation. REPEAT road test if necessary. |
| **E3: CHECK BRAKE PEDAL TRAVEL-PRESSURIZE SYSTEM** | |
| | 1 Pump the brake pedal rapidly (five times). |
| | Does the brake pedal travel build up and then hold?<br>**Yes**<br>BLEED the brake system. Refer to the General Procedures. TEST the system for normal operation. REPEAT road test. For additional information, refer to Section 206-06 Hydraulic Brake Actuation<br>**No**<br>GO to E4. |
| **E4: CHECK FOR BRAKE SYSTEM LEAKS** | |
| | 1 Check for external brake system leaks. For additional information, refer to Brake master cylinder in this section. |
| | Are leaks found?<br>**Yes**<br>REPAIR as necessary, ADD fluid and BLEED brake system. For additional information, refer to General Procedures. TEST the system for normal operation. REPEAT road test.<br>**No**<br>System is OK. |

| **PINPOINT TEST F : THE PEDAL GOES DOWN SLOWLY** | |
|---|---|
| **TEST CONDITIONS** | **DETAILS/RESULTS/ACTIONS** |
| **F1: ROAD TEST VEHICLE - CHECK BRAKE PEDAL OPERATION** | |
| | 1 Check if the condition occurs during actual stopping application by applying the brake pedal while the vehicle is moving. |
| | Does the condition occur when the vehicle is moving?<br>**Yes**<br>GO to F2.<br>**No**<br>GO to F3. |
| **F2: CHECK FOR BRAKE SYSTEM LEAKS** | |
| | 1 Check for external brake system leaks. For additional information, refer to Brake master cylinder in this section. |
| | Are there any external brake system leaks?<br>**Yes**<br>REPAIR as necessary. ADD fluid and BLEED the brake system. For additional information, refer to General Procedures. TEST the system for normal operation.<br>**No**<br>GO to F3. |
| **F3: CARRY OUT A BRAKE MASTER CYLINDER BYPASS TEST** | |
| | 1 Test for brake master cylinder bypass condition. Refer to Brake master cylinder component test in this section. |
| | Are any concerns found?<br>**Yes**<br>INSTALL a new brake master cylinder, ADD fluid and BLEED the brake system. For additional information, refer to General Procedures. TEST the system for normal operation.<br>**No**<br>System is OK. |

GETtheMANUALS.org

**PINPOINT TEST G : EXCESSIVE BRAKE PEDAL EFFORT**

| TEST CONDITIONS | DETAILS/RESULTS/ACTIONS |
|---|---|
| **G1: CHECK BRAKE PADS** | |
| | 1 Check the brake pads for wear, contamination, correct installation, damage and type. |
| | Are any concerns found?<br>**Yes**<br>INSTALL the front brake pads correctly or INSTALL new front brake pads if necessary. For additional information, refer to Section 206-03 Front Disc Brake. INSTALL the rear brake pads correctly or INSTALL new rear brake pads if necessary. For additional information, refer to Section 206-04 Rear Disc Brake. REPEAT road test.<br>**No**<br>GO to G2. |
| **G2: CHECK VACUUM** | |
| | 1 Disconnect the vacuum booster hose from the brake booster. |
| | 2 Connect a vacuum/pressure tester to the vacuum hose. |
| | 3 Run the engine at normal operating temperature. |
| | 4 Record the vacuum reading. |
| | Is the reading 40.5kPa (12 in-Hg) or greater?<br>**Yes**<br>GO to G3.<br>**No**<br>LOCATE and REPAIR the source of low vacuum. TEST the system for normal operation. |
| **G3: INSPECT SYSTEM** | |
| | 1 Switch the engine off. |
| | 2 Reconnect the vacuum hose. |
| | 3 Inspect the brake booster, rubber grommet, and all vacuum plumbing for cracks, holes, damaged connections, or missing clamps. |
| | 4 Pump the brake pedal several times to exhaust the vacuum. Push down on the brake pedal and hold. |
| | Does the brake pedal move down when the engine is started?<br>**Yes**<br>Vacuum system is OK.<br>**No**<br>GO to G4. |
| **G4: CHECK POWER BRAKE BOOSTER VALVE** | |
| | 1 Check the brake booster valve. For additional information, refer to Brake Booster in this section. |
| | Is the power brake booster valve OK?<br>**Yes**<br>CHECK the brake booster. For additional information, refer to Brake Booster in this section. INSTALL a new brake booster if necessary. TEST the system for normal operation.<br>**No**<br>INSTALL a new brake booster valve. TEST the system for normal operation. |

## PINPOINT TEST H : BRAKE LOCKUP DURING LIGHT BRAKE PEDAL FORCE

| TEST CONDITIONS | DETAILS/RESULTS/ACTIONS |
|---|---|
| **H1: TEST BRAKE LOCKUP** | |
| | 1 Road test the vehicle and apply the brake pedal lightly. |
| | Do the brakes lockup?<br>**Yes**<br>GO to H2.<br>**No**<br>Vehicle is OK. |
| **H2: INSPECT BRAKE PADS** | |
| | 1 Inspect brake pads for contamination, correct installation, damage and type. |
| | Are any concerns found?<br>**Yes**<br>CHECK the front brake pads. For additional information, refer to Section 206-03 Front Disc Brake. CHECK the rear brake pads. For additional information, refer to Section 206-04 Rear Disc Brake. INSTALL new brake pads as necessary. REPEAT road test.<br>**No**<br>GO to H3. |
| **H3: INSPECT BRAKE CALIPERS** | |
| | 1 Inspect brake calipers for binding, leaking or sticking. |
| | Are any concerns found?<br>**Yes**<br>CHECK the front brake calipers. For additional information, refer to Section 206-03 Front Disc Brake. CHECK the rear brake calipers. For additional information, refer to Section 206-04 Rear Disc Brake. INSTALL the brake calipers correctly or INSTALL new brake calipers as necessary. TEST the system for normal operation. REPEAT road test if necessary.<br>**No**<br>Vehicle is OK. |

## PINPOINT TEST I : BRAKES DRAG

| TEST CONDITIONS | DETAILS/RESULTS/ACTIONS |
|---|---|
| **I1: ROAD TEST VEHICLE** | |
| | 1 Road test the vehicle and apply the brakes. |
| | Are the brakes functioning correctly?<br>**Yes**<br>Vehicle is OK.<br>**No**<br>GO to I2. |
| **I2: CHECK BRAKE CALIPERS** | |
| | 1 Check the front caliper pistons for binding, leaking or sticking. For additional information, refer to Section 206-03 Front Disc Brake. Check the rear caliper pistons for binding, leaking or sticking. For additional information, refer to Section 206-04 Rear Disc Brake. |

GETtheMANUALS.org

| | |
|---|---|
| | Do the disc brake caliper pistons and pins bind, leak or stick?<br>**Yes**<br>INSPECT the brake calipers and parking brake cables. INSTALL new components as necessary. Road test vehicle.<br>**No**<br>GO to I3. |
| **I3: CHECK BRAKE BOOSTER** | |
| | 1 Check the brake booster connecting rod alignment and travel. For additional information, refer to Section 206-07 Power Brake Actuation. |
| | Is the connecting rod OK?<br>**Yes**<br>Vehicle is OK.<br>**No**<br>INSTALL a new brake booster. For additional information, refer to Section 206-07 Power Brake Actuation. TEST the system for normal operation. |

| **PINPOINT TEST J : EXCESSIVE/ERRATIC BRAKE PEDAL TRAVEL** | |
|---|---|
| **TEST CONDITIONS** | **DETAILS/RESULTS/ACTIONS** |
| **J1: TEST ON ROUGH ROAD** | |
| | 1 Road test the vehicle on rough road conditions. |
| | 2 Apply the brakes slowly. |
| | Is the brake pedal effort and brake pedal travel normal?<br>**Yes**<br>Vehicle is OK.<br>**No**<br>GO to J2. |
| **J2: CHECK BRAKE FLUID LEVEL** | |
| | 1 Check the brake master cylinder reservoir fluid level. |
| | Is the fluid level OK?<br>**Yes**<br>GO to J3.<br>**No**<br>CHECK brake master cylinder reservoir sealing points. For additional information, refer to Brake master cylinder in this section. ADD brake fluid and BLEED the brake system. For additional information, refer to General Procedures. TEST the system for normal operation. REPEAT road test if necessary. |
| **J3: CHECK BRAKE PEDAL RESERVE** | |
| | 1 Engine is idle. |
| | 2 Apply the brake pedal lightly three or four times. |
| | 3 Wait 15 seconds for the vacuum to replenish. |
| | 4 Push down on the brake pedal until it stops moving downward or an increased resistance to the brake pedal travel occurs. |
| | 5 Hold the brake pedal in the applied position while increasing the engine speed to 2000 revs/min. |
| | 6 Release the accelerator pedal. |
| | Does the brake pedal move downward as the engine speed returns to idle?<br>**Yes**<br>GO to J4.<br>**No**<br>CHECK the vacuum to the brake booster. For additional information, refer to Section 206-07 Power Brake Actuation. |
| **J4: CHECK THE FRONT HUB AND BEARING ASSEMBLY** | |
| | 1 Check the front hub and bearing assembly. For additional information, refer to REFER to Section 204-00 Suspension System - General Information. |
| | Are the front wheel bearings loose?<br>**Yes**<br>INSTALL a new front wheel bearing if damaged. For additional information, refer to REFER to Section 204-00 Suspension System - General Information.<br>TEST the system for normal operation.<br>**No**<br>CHECK the front brake discs for thickness variances. For additional information, refer to General Procedures. |

| **PINPOINT TEST K : SLOW OR INCOMPLETE BRAKE PEDAL RETURN** | |
|---|---|
| **TEST CONDITIONS** | **DETAILS/RESULTS/ACTIONS** |
| **K1: CHECK FOR BRAKE PEDAL RETURN** | |
| | 1 Run the engine at fast idle while making several brake applications. |
| | 2 Pull the brake pedal rearward with approximately 44.5 N (10lb) force. |
| | 3 Release the brake pedal and measure the distance to the toe board. |
| | 4 Make a hard brake application. |
| | 5 Release the brake pedal and measure the brake pedal to toe board distance. The brake pedal should return to its original position. |
| | Does the brake pedal return to its original position?<br>**Yes**<br>Vehicle is OK.<br>**No**<br>GO to K2. |
| **K2: CHECK FOR BRAKE PEDAL BINDING** | |
| | 1 Check the brake pedal to make sure it is operating freely. |
| | Is the brake pedal operating freely?<br>**Yes**<br>INSTALL a new brake booster. For additional information, refer to Section 206-07 Power Brake Actuation. TEST the system for normal operation.<br>**No**<br>REPAIR or INSTALL new brake pedal. TEST the system for normal operation. |

## Component Tests

GETtheMANUALS.org

### Brake Booster

1. **1.** Check all hoses and connections. All unused vacuum connectors should be capped. Hoses and their connections should be correctly secured and in good condition with no holes and no collapsed areas. Inspect the valve on the brake booster for damage.
2. **2.** Check the hydraulic brake system for leaks or low fluid.
3. **3.** With the transmission in PARK (automatic transmissions) or in NEUTRAL (manual transmissions), stop the engine and apply the parking brake. Pump the brake pedal several times to exhaust all vacuum in the system.
4. **4.** With the engine switched off and all vacuum in the system exhausted, apply the brake pedal and hold it down. Start the engine. If the vacuum system is operating, the brake pedal will tend to move downward under constant foot pressure. If no motion is felt, the vacuum booster system is not functioning.
5. **5.** Remove the vacuum hose from the brake booster. Manifold vacuum should be available at the brake booster end of the hose with the engine at idle speed and the transmission in PARK or NEUTRAL. Make sure that all unused vacuum outlets are correctly capped, hose connectors are correctly secured and vacuum hoses are in good condition. When it is established that manifold vacuum is available to the brake booster, connect the vacuum hose to the brake booster and repeat Step 3. If no downward movement of the brake pedal is felt, install a new brake booster.
6. **6.** Operate the engine for a minimum of 10 seconds at a fast idle. Stop the engine and allow the vehicle to stand for 10 minutes. Then, apply the brake pedal with approximately 89 N (20lb) of force. The pedal feel (brake application) should be the same as that noted with the engine running. If the brake pedal feels hard (no power assist), install a new valve and then repeat the test. If the brake pedal still feels hard, install a new brake booster. If the brake pedal movement feels spongy, bleed the brake system. REFER to Brake System Bleeding in this section.

### Brake Master Cylinder

Usually, the first and strongest indicator of anything wrong in the brake system is a feeling through the brake pedal. In diagnosing the condition of the brake master cylinder, check pedal feel as evidence of a brake concern. Check for brake warning lamp illumination and the brake fluid level in the brake master cylinder reservoir.

### Normal Conditions

The following conditions are considered normal and are not indications that the brake master cylinder is in need of repair.

- New brake systems are designed to produce a pedal effort that is not as hard as in the past. Complaints of light pedal efforts should be compared to the pedal efforts of another vehicle of the same model and year.
- The fluid level will fall with brake pad wear.

### Abnormal Conditions

• NOTE: Prior to carrying out any diagnosis, make sure the brake system warning indicator is functional.

Changes in the brake pedal feel or brake pedal travel are indicators that something could be wrong in the brake system. The diagnostic procedure and techniques use brake pedal feel, warning indicator illumination and low brake fluid level as indicators to diagnosing brake system concerns. The following conditions are considered abnormal and indicate that the brake master cylinder is in need of repair:

- Brake pedal goes down fast. This could be caused by an external or internal leak.
- Brake pedal goes down slowly. This could be caused by an internal or external leak.
- Brake pedal is low or feels spongy. This condition may be caused by no fluid in the brake master cylinder, reservoir cap vent holes clogged or air in the hydraulic system.
- Brake pedal effort is excessive. This may be caused by a bind or obstruction in the pedal/linkage, a faulty non return valve, booster or insufficient booster vacuum.
- Rear brakes lock up during light pedal force. This may be caused by damaged brake pads, a partially applied parking brake, a damaged ABS sensor or bearing failure.
- Brake pedal effort erratic. This condition could be caused by the brake booster or incorrectly installed brake pads.
- Brake warning indicator is on. This may be caused by low fluid level or float assembly damaged.

### Non Pressure Leaks

Any reduced fluid volume in the brake master cylinder reservoir condition may be caused by two types of none pressure external leaks.

Type 1: An external leak may be occur at the brake master cylinder reservoir cap because of incorrect positioning of gasket and cap. Reposition cap and gasket.

Type 2: An external leak may occur at the brake master reservoir mounting seals. Repair such a leak by installing new seals and make sure that the brake master reservoir retaining bolt is correctly installed.

Type 3: An external leak may occur in the manual transmission clutch operating system. For additional information, refer to Section 308-00 Manual Transmission/Transaxle and Clutch - General Information.

GETtheMANUALS.org

# Brake System - General Information - Brake Disc Runout Check

General Procedures

## Check

1. Remove the wheel and tire. For additional information, refer to Section 204-04 Wheels and Tires.
2. NOTE: For vehicles with Brembo brakes, detach the parking brake caliper.

   Detach the front or rear brake caliper.
3. Install all wheel nuts and tighten equally to 20 Nm.
   - Make sure that the brake disc is fully seated against the hub face.
4. Install a dial test indicator gauge and holding fixture to a suitable mounting point.
5. NOTE: If the runout is outside specification, check the hub face runout.

   Using the dial test indicator, measure the inner and outer faces of the brake disc.

   1. Position the gauge so that it contacts the disc 10 mm (0.4 in) from the outer edge.
   2. Slowly rotate the hub/disc assembly. Note the reading.
6. If a front hub runout check is required, remove the front brake disc. For additional information, refer to Section 206-03 Front Disc Brake. If a rear hub runout check is required, remove the rear brake disc. For additional information, refer to Section 206-04 Rear Disc Brake.
7. NOTE: The hub surface should be free from dirt and corrosion. Do not use abrasive cloths to clean hub faces.

   Using the dial test indicator, measure the hub face runout.

   1. Position the gauge so that it contacts the mounting tube between the stud and the chamfer.
   2. Slowly rotate the hub and note the runout. For additional information, refer to the specification chart.

   - If the front hub runout exceeds the specifications, install a new hub, brake disc and recheck. For additional information, refer to Section 204-01 Front Suspension. If the rear hub runout exceeds the specifications, install a new hub, brake disc and recheck. For additional information, refer to Section 204-02 Rear Suspension.
8. If the front hub face is within specification, install a new brake disc. For additional information, refer to Section 206-03 Front Disc Brake. If the rear hub face is within specification, install a new disc. For additional information, refer to Section 206-04 Rear Disc Brake.
9. Install the wheel and tire. For additional information, refer to Section 204-04 Wheels and Tires.

GETtheMANUALS.org

# Brake System - General Information - Brake System BleedingVIN Range: M45255->N52047

General Procedures

WARNING: Brake Fluid contains polyglycol ethers and polyglycols. Avoid contact with the eyes. Wash hands thoroughly after handling, as prolonged contact may cause irritation and dermatitis. If brake fluid contacts the eyes, flush the eyes with cold water or eyewash solution and seek medical attention. If taken internally do not induce vomiting, seek immediate medical attention. Failure to follow these instructions may result in personal injury.

• CAUTIONS:

Make sure that the vehicle is standing on a level surface or supported on a wheel free lift.

If brake fluid comes into contact with the paintwork, the affected area must be immediately washed down with cold water.

• NOTE: The system consists of separate circuits for each front and diagonally opposite rear wheel. Each front to rear circuit and each wheel circuit can be bled individually of each other.

• NOTE: The service ABS hydraulic control unit is supplied pre-filled with brake fluid. Therefore, a conventional bleed procedure should be adequate to remove all the air from the brake system.

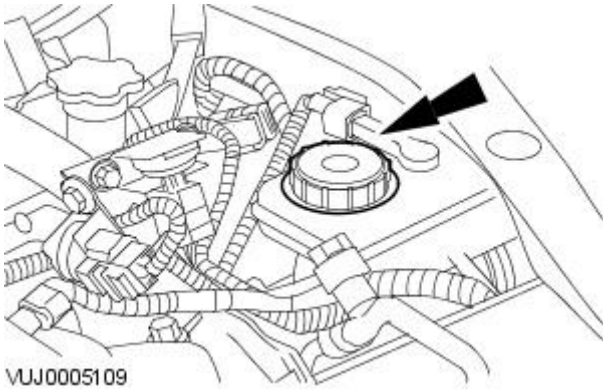


**1.** CAUTION: Make sure that the brake fluid reservoir filler cap does not become contaminated.

Remove the brake master cylinder reservoir filler cap.

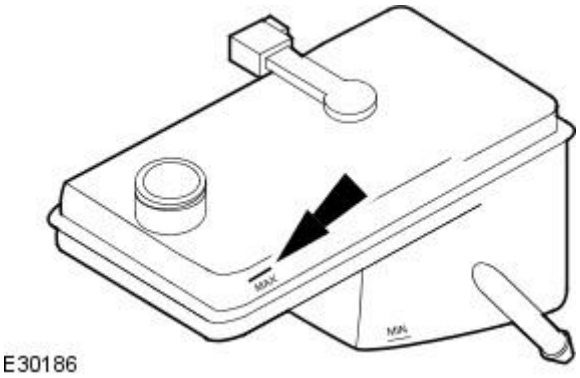


**2.** NOTE: Always use fluid from a sealed container and dispose of used fluid safely.

Fill up the brake master cylinder reservoir to the MAX mark as necessary.

**3.** Install a bleed tube to the rear right-hand brake caliper bleed nipple.

**4.** Bleed the circuit.

- Make sure the bleed tube is firmly attached to the bleed nipple.

**5.** Repeat the procedure for the rear left, front right and front left-hand brake circuits.

**6.** Fill up the brake master cylinder reservoir to the MAX mark.

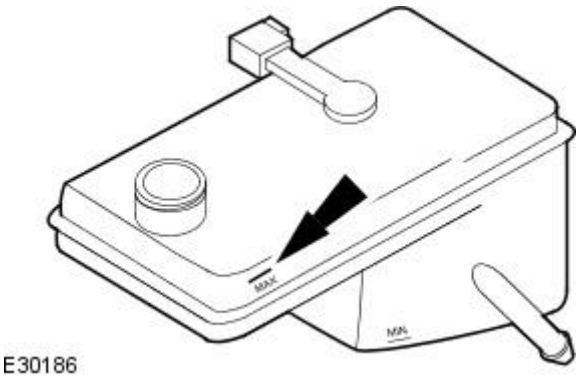


- Submerge the end of the bleed tube in a bleed jar containing a small quantity of approved brake fluid.
- Position the bleed jar base at least 300 mm (12 in) above the bleed nipple to maintain fluid pressure and prevent air leaking past the bleed nipple threads.
- Open the bleed nipple half a turn.
- Slowly apply the brake pedal to its maximum travel (this forces brake fluid into the bleed jar).
- Close the bleed nipple.
- Return the brake pedal to the rest position.
- Wait 2 seconds to allow the brake fluid to replenish the system.
- Fill up the brake master cylinder reservoir to the MAX mark as necessary.
- Continue to bleed the circuit until air-free brake fluid is pumped into the jar.
- Fully tighten the bleed nipple.

GETtheMANUALS.org

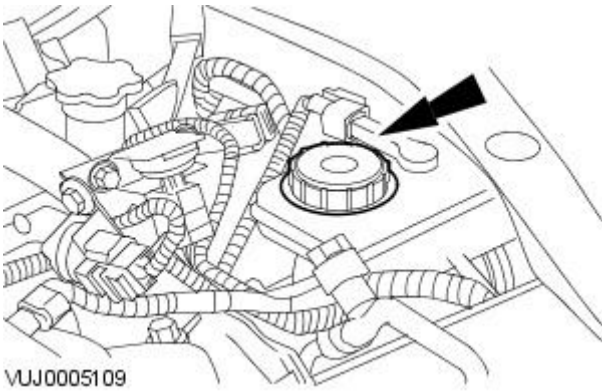


7. Install the brake master cylinder reservoir filler cap.

## Additional Procedure to Bleed New Calipers with Integral Park Brake Mechanism

• NOTE: Due to the complexity of the fluid path within the integral parking brake calipers, it may be difficult to achieve a satisfactory result using the procedure above when new calipers have been installed.

1. Using the Jaguar approved diagnostic system, put the parking brake system into service mode.
2. Remove both rear wheels and tires.
   For additional information, refer to Section 204-04 Wheels and Tires.
3. Bleed the braking system.
   For additional information, refer to Brake System Bleeding in this section.
4. Disconnect the parking brake cable.
   1. Release the tension.
   2. Disconnect the parking brake cable.

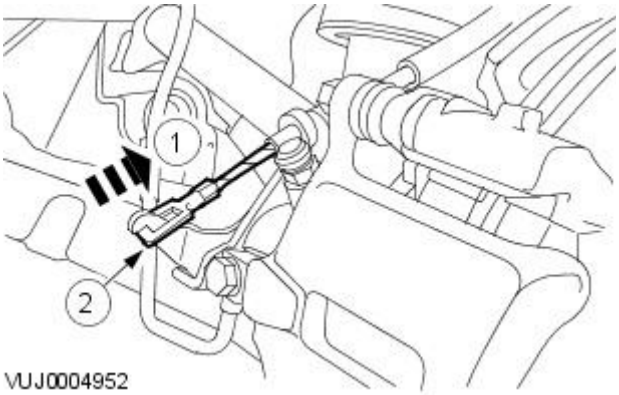


5. Detach the parking brake cable.
   1. Release the retaining tangs.
   2. Detach the parking brake cable.

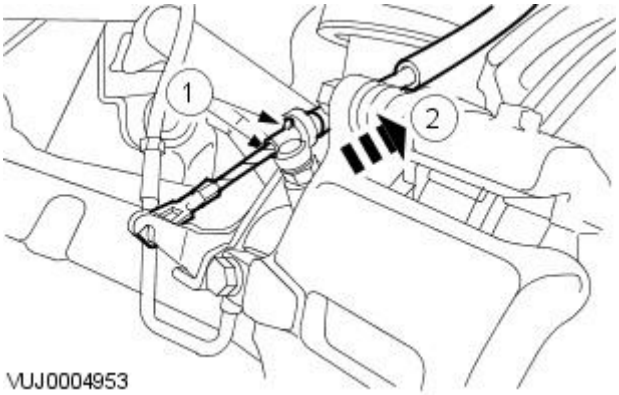


6. Detach the brake caliper from the anchor bracket.

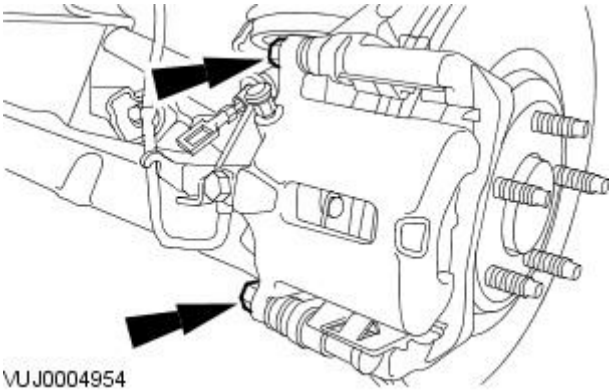


GETtheMANUALS.org

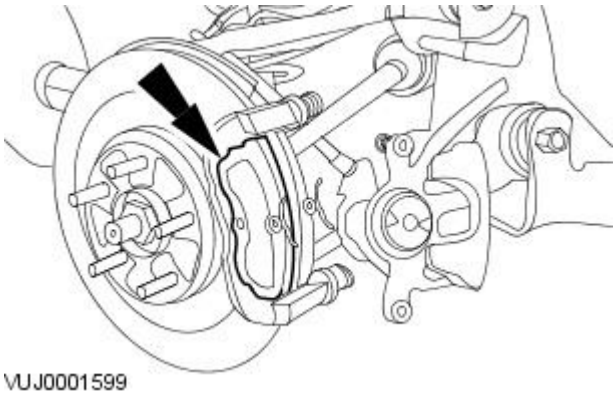

VUJ0001599

**7.** NOTE: The inner brake pad must have at least 7mm of friction material. If there is less then 7mm a new pad must be used.

Remove the outer brake pad.

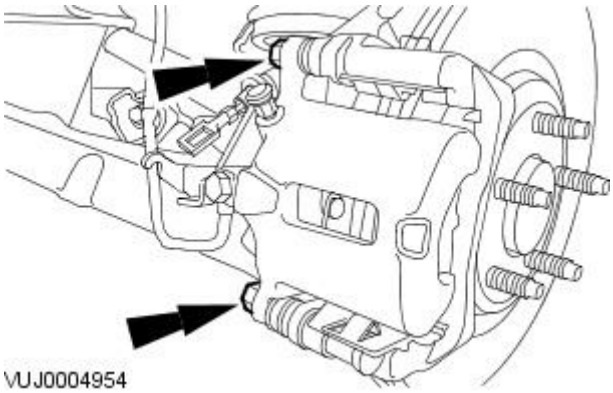

VUJ0004954

**8.** Attach the brake caliper with a protective cloth placed between the caliper fingers and the disc.

**9.** Slowly apply the brake pedal until the piston is extended to the brake disc.

**10.** Detach the brake caliper from the anchor bracket.

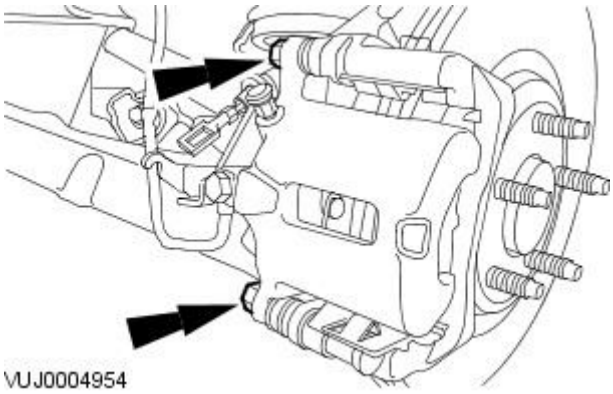

VUJ0004954

**11.** Bleed the caliper.

- Make sure the bleed tube is firmly attached to the bleed nipple.
- Submerge the end of the bleed tube in a bleed jar containing a small quantity of approved brake fluid.
- Position the bleed jar base at least 300 mm (12 in) above the bleed nipple to maintain fluid pressure and prevent air leaking past the bleed nipple threads.
- Position the brake caliper with the piston facing down and the bleed nipple at the top.
- Open the bleed nipple half a turn.
- Using the special tool, fully retract the caliper piston.
- Close the bleed nipple.
- Repeat the above procedure twice.
- Fill up the brake master cylinder reservoir to the MAX mark as necessary.
- Continue to bleed the caliper using the above procedure until air-free brake fluid is pumped into the jar.
- Fully tighten the bleed nipple.
- Make sure the piston grooves are aligned to fit the brake pad peg when the caliper is assembled.

GETtheMANUALS.org

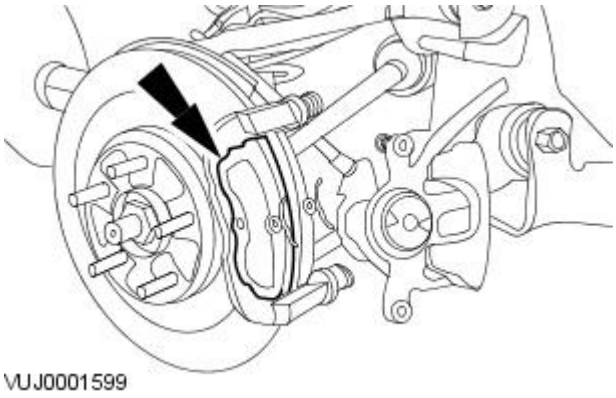


**12.** Install the outer brake pad.

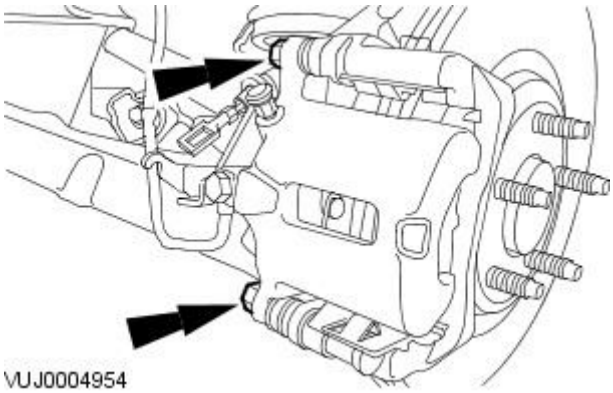


**13.** Install the brake caliper.

- Install new brake caliper guide pin retaining bolts.
- Tighten to 34 Nm.

**14.** Bleed the braking system.
For additional information, refer to Brake System Bleeding in this section.

**15.** Install the wheels and tires.
For additional information, refer to Section 204-04 Wheels and Tires.

GETtheMANUALS.org

# Brake System - General Information - Brake System BleedingVIN Range: N52048->N99999

General Procedures

WARNING: Brake fluid contains polyglycol ethers and polyglycols. Avoid contact with the eyes. Wash hands thoroughly after handling, as prolonged contact may cause irritation and dermatitis. If brake fluid contacts the eyes, flush the eyes with cold water or eyewash solution and seek medical attention. If taken internally do not induce vomiting, seek immediate medical attention. Failure to follow these instructions may result in personal injury.

• CAUTIONS:

Make sure that the vehicle is standing on a level surface or supported on a wheel free lift.

If brake fluid comes into contact with the paintwork, the affected area must be immediately washed down with cold water.

• NOTE: The system consists of separate circuits for each front and diagonally opposite rear wheel. Each front to rear circuit and each wheel circuit can be bled individually of each other.

• NOTE: The service anti-lock braking system (ABS) hydraulic control unit is supplied pre-filled with brake fluid. Therefore, a conventional bleed procedure should be adequate to remove all the air from the brake system.

All vehicles

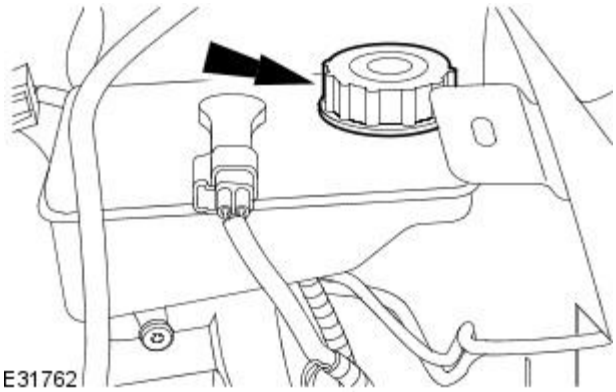


**1.** CAUTION: Make sure that the brake master cylinder reservoir filler cap does not become contaminated.

Remove the brake master cylinder reservoir filler cap.

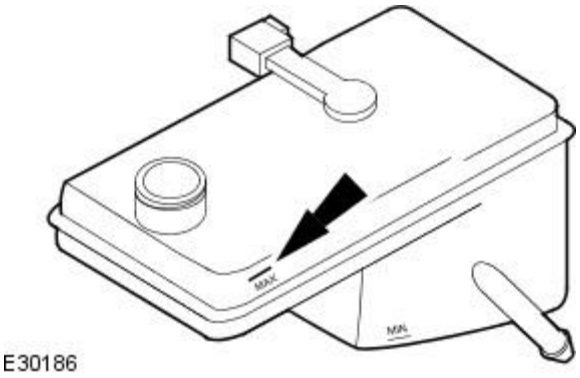


**2.** NOTE: Always use fluid from a sealed container and dispose of used fluid safely.

Fill up the brake master cylinder reservoir to the MAX mark as necessary.

**3.** Install a bleed tube to the rear right-hand brake caliper bleed nipple.

**4.** Bleed the circuit.

- Make sure the bleed tube is firmly attached to the bleed nipple.
- Submerge the end of the bleed tube in a bleed jar containing a small quantity of approved brake fluid.
- Position the bleed jar base at least 300 mm (12 in) above the bleed nipple to maintain fluid pressure and prevent air leaking past the bleed nipple threads.
- Open the bleed nipple half a turn.
- Slowly apply the brake pedal to its maximum travel (this forces brake fluid into the bleed jar).
- Close the bleed nipple.
- Return the brake pedal to the rest position.
- Wait 2 seconds to allow the brake fluid to replenish the system.
- Fill up the brake master cylinder reservoir to the MAX mark as necessary.
- Continue to bleed the circuit until air-free brake fluid is pumped into the jar.

GETtheMANUALS.org

- Fully tighten the bleed nipple.

5. Repeat the procedure for the rear left, front right and front left-hand brake circuits.
6. Fill up the brake master cylinder reservoir to the MAX mark.

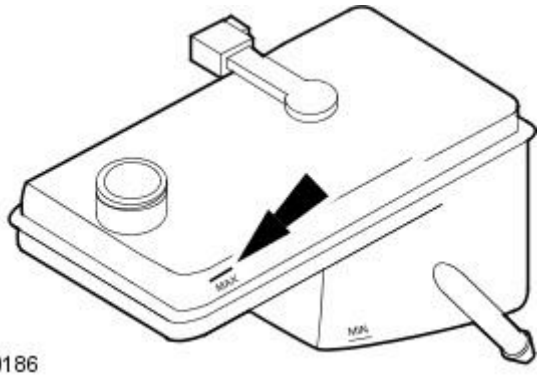

E30186

• NOTE: Due to the complexity of the fluid path within the integral park brake calipers, it may be difficult to achieve a satisfactory result using the procedure above when new calipers have been installed. Therefore carry out the following steps to make sure that the system is properly bled.

7. Remove both rear wheels and tires.
   For additional information, refer to: Wheel and Tire (204-04, Removal and Installation).

Vehicles with high performance brakes

8. NOTE: Left-hand shown, right-hand similar.

   Remove the logo badge.

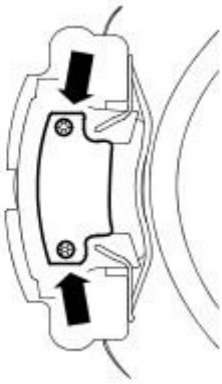
E61746

All vehicles

9. NOTE: Left-hand shown, right-hand similar.

   Remove the anti-rattle spring.

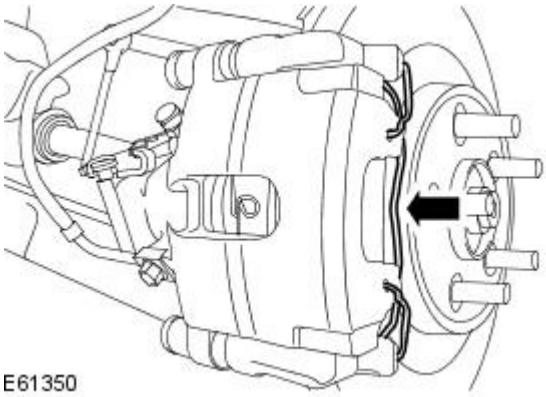
E61350

10. NOTE: Left-hand shown, right-hand similar.

    Remove the brake caliper retaining bolt dust covers.

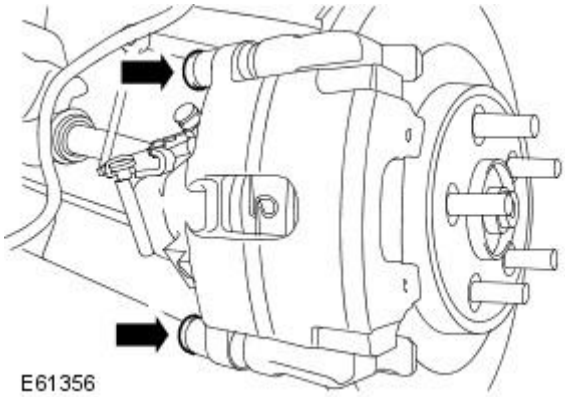
E61356

GETtheMANUALS.org

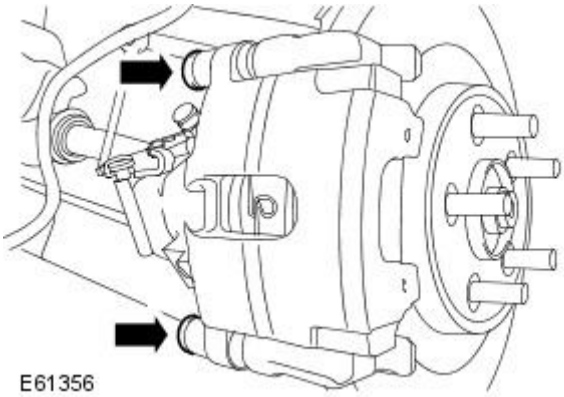


**11.** NOTE: Left-hand shown, right-hand similar.

Detach the brake caliper.

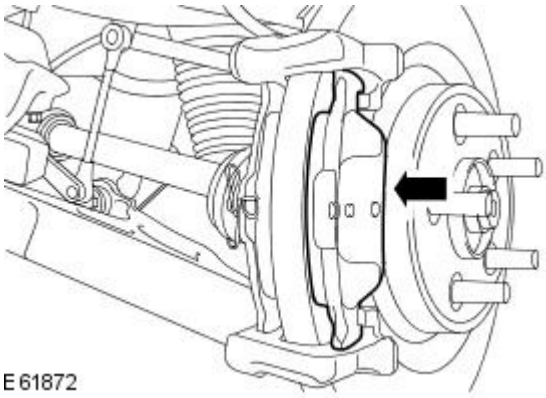


**12.** NOTE: The inner brake pad must have at least 7mm of friction material. If there is less then 7mm a new pad must be used.

• NOTE: Left-hand shown, right-hand similar.

Remove the outer brake pad.

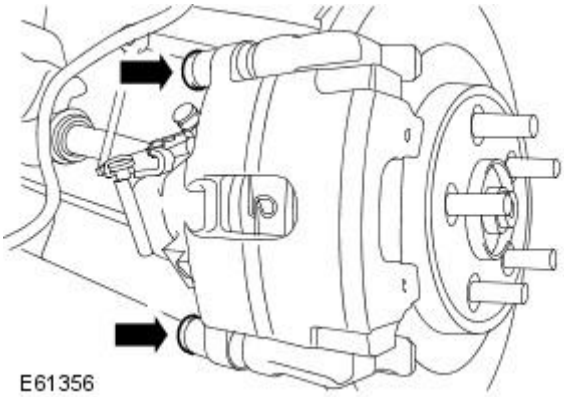


**13.** NOTE: Left-hand shown, right-hand similar.

Attach the brake caliper with a protective cloth placed between the caliper fingers and the disc.

**14.** Slowly apply the brake pedal until the piston is extended to the brake disc.

**15.** NOTE: Left-hand shown, right-hand similar.

Detach the brake caliper.

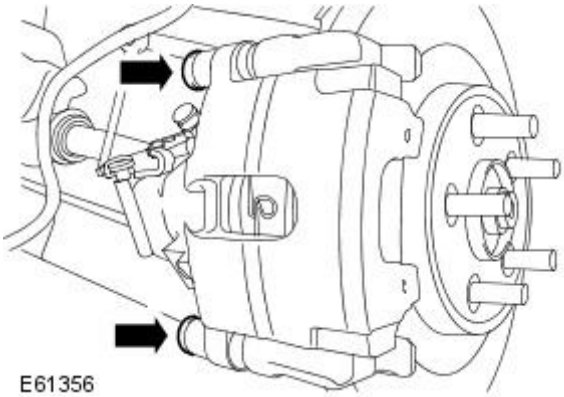


**16.** Bleed the caliper.

- Make sure the bleed tube is firmly attached to the bleed nipple.
- Submerge the end of the bleed tube in a bleed jar containing a small quantity of approved brake fluid.
- Position the bleed jar base at least 300 mm (12 in) above the bleed nipple to maintain fluid pressure and prevent air leaking past the bleed nipple threads.
- Position the brake caliper with the piston facing down and the bleed nipple at the top.
- Open the bleed nipple half a turn.

GETtheMANUALS.org

- Using a suitable tool, fully retract the caliper piston.
- Close the bleed nipple.
- Repeat the above procedure twice.
- Fill up the brake master cylinder reservoir to the MAX mark as necessary.
- Continue to bleed the caliper using the above procedure until air-free brake fluid is pumped into the jar.
- Fully tighten the bleed nipple.

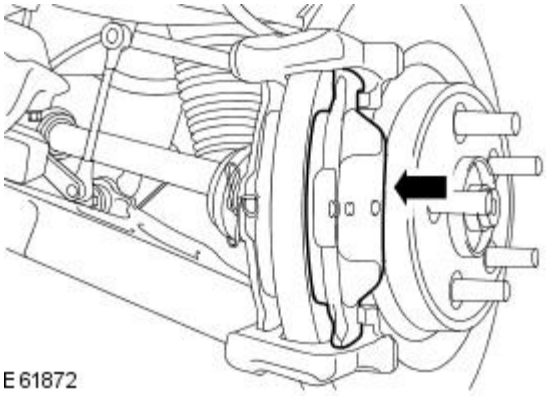


**17.** NOTE: Left-hand shown, right-hand similar.

Install the outer brake pad.

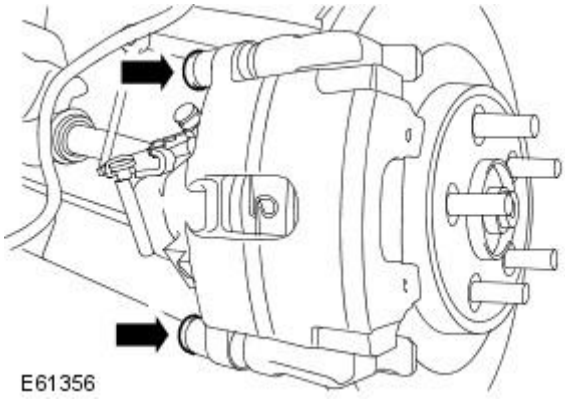


**18.** NOTE: Left-hand shown, right-hand similar.

Install the brake caliper.

- Tighten to 28 Nm.

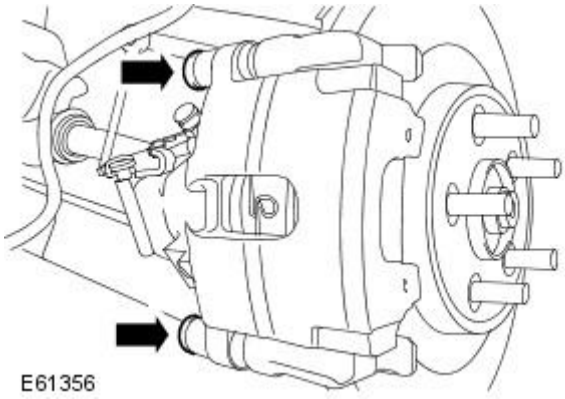


**19.** NOTE: Left-hand shown, right-hand similar.

Install the brake caliper retaining bolt dust covers.

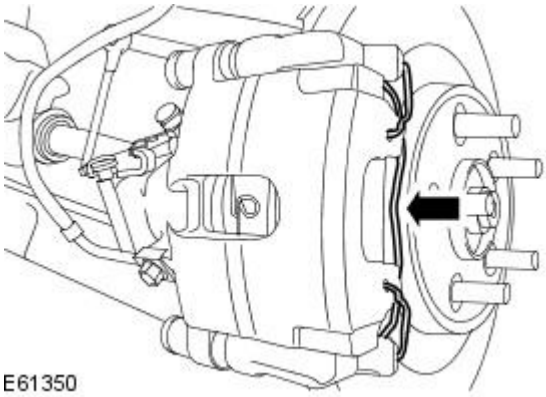


**20.** NOTE: Left-hand shown, right-hand similar.

Install the anti-rattle spring.

GETtheMANUALS.org

Vehicles with high performance brakes

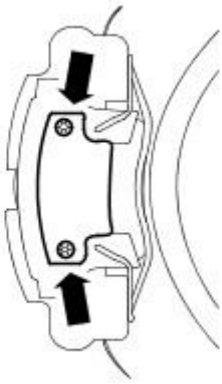

E61746

**21.** NOTE: Left-hand shown, right-hand similar.

Install the logo badge.

- Tighten to 5 Nm.

All vehicles

**22.** Install the wheels and tires.
For additional information, refer to: Wheel and Tire (204-04, Removal and Installation).

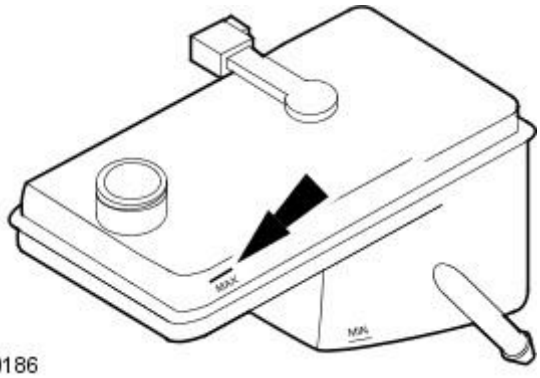


E30186

**23.** NOTE: Always use fluid from a sealed container and dispose of used fluid safely.

Fill up the brake master cylinder reservoir to the MAX mark as necessary.

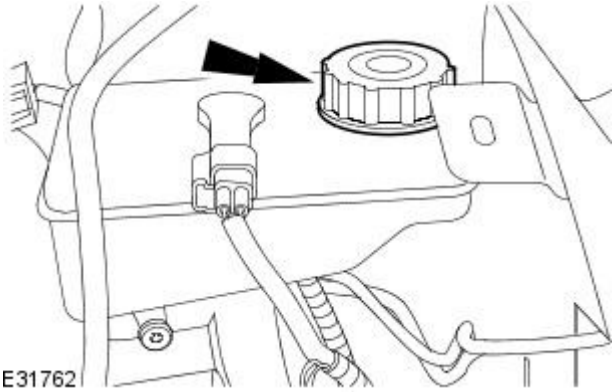

E31762

**24.** CAUTION: Make sure that the brake master cylinder reservoir filler cap does not become contaminated.

Install the brake master cylinder reservoir filler cap.

GETtheMANUALS.org

# Front Disc Brake -

**Lubricants, Fluids, sealers and Adhesives**

CAUTION: Do not use brake fluid ITT Super Dot 4 on 2006my vehicles onwards. Failure to follow this instruction may result in damage to the vehicle.

• NOTE: Brake fluid ITT Super Dot 4 has now been superseded by Shell ESL Super Dot 4 which is the Jaguar recommended brake fluid. Shell ESL Super Dot 4 can be used on all model years.

| Item | Specification |
|---|---|
| Brake fluid | ITT Super Dot 4 |
| Brake fluid | Shell ESL Super Dot 4 |
| Brake caliper slide pin grease | Klueber GLK1 |

**Torque Specifications**

| Description | Nm | lb-ft | lb-in |
|---|---|---|---|
| Brake caliper anchor plate - Vehicles with 2.5L, 2.7L Diesel, 3.0L or 4.2L engine | 103 | 76 | - |
| Brake caliper retaining bolts - Vehicles with 2.5L, 2.7L Diesel, 3.0L or 4.2L engine | 34 | 25 | - |
| Brake caliper retaining bolts - Vehicles with high performance brakes | 212 | 156 | - |
| Brake hose to brake caliper - Vehicles with 2.5L, 2.7L Diesel, 3.0L or 4.2L engine | 35 | 26 | - |
| Brake hose to brake caliper - Vehicles with 2.5L, 2.7L Diesel, 3.0L or 4.2L engine | 35 | 26 | - |

GETtheMANUALS.org

# Front Disc Brake -

**Lubricants, Fluids, Sealers and Adhesives**

CAUTION: Do not use brake fluid ITT Super Dot 4 on 2006my vehicles onwards. Failure to follow this instruction may result in damage to the vehicle.

• NOTE: Brake fluid ITT Super Dot 4 has now been superseded by Shell ESL Super Dot 4 which is the Jaguar recommended brake fluid. Shell ESL Super Dot 4 can be used on all model years.

| Item | Specification |
|---|---|
| Brake fluid | ITT Super Dot 4 |
| Brake fluid | Shell ESL Super Dot 4 |

**Torque Specifications**

| Description | Nm | lb-ft | lb-in |
|---|---|---|---|
| Brake caliper anchor plate retaining bolts | 115 | 85 | - |
| Brake caliper retaining bolts - Vehicles with high performance brakes | 58 | 43 | - |
| Brake caliper retaining bolts - Vehicles with standard brakes | 28 | 21 | - |
| Brake hose retaining bolt | 35 | 26 | - |

GETtheMANUALS.org

# Front Disc Brake - Front Disc BrakeVIN Range: M45255->N52047

Description and Operation

Vehicles without Brembo brakes

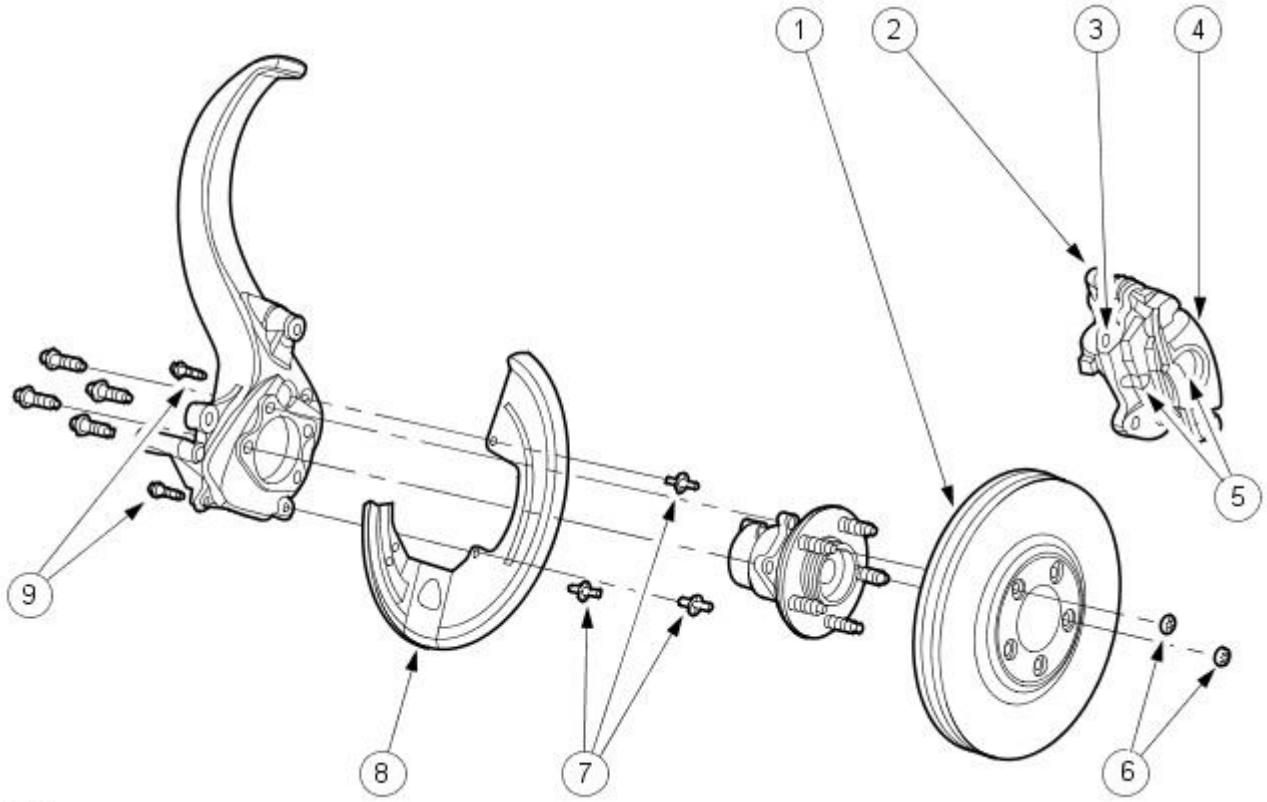


E30178

| Item | Part Number | Description |
|---|---|---|
| 1 | — | Brake disc |
| 2 | — | Brake caliper guide pin retaining bolt |
| 3 | — | Brake caliper anchor plate |
| 4 | — | Brake caliper |
| 5 | — | Brake pads |
| 6 | — | Brake disc retaining clips |
| 7 | — | Brake disc shield retaining rivets |
| 8 | — | Brake disc shield |
| 9 | — | Brake caliper anchor plate retaining bolts |

For vehicles without Brembo brakes, the brake system consists of the following components:

- Brake pads
- Double piston, floating calipers
- Brake discs
- Brake caliper anchor plates
- Steel braided brake hoses

The brake caliper has two retaining bolts that attach the brake caliper to the anchor plate. These are of double, sliding piston type which makes sure equal effort is applied through both brake pads. The anchor plate is attached to the wheel knuckle with two bolts. The hydraulic system provides separate circuits for each pair of diagonally opposed wheels (i.e. left front, right rear and right front, left rear).

The brake disc is manufactured from cast iron and is of the vented type. It is retained on the hub by two retaining clips and the wheel studs.

Vehicles with Brembo brakes

GETtheMANUALS.org

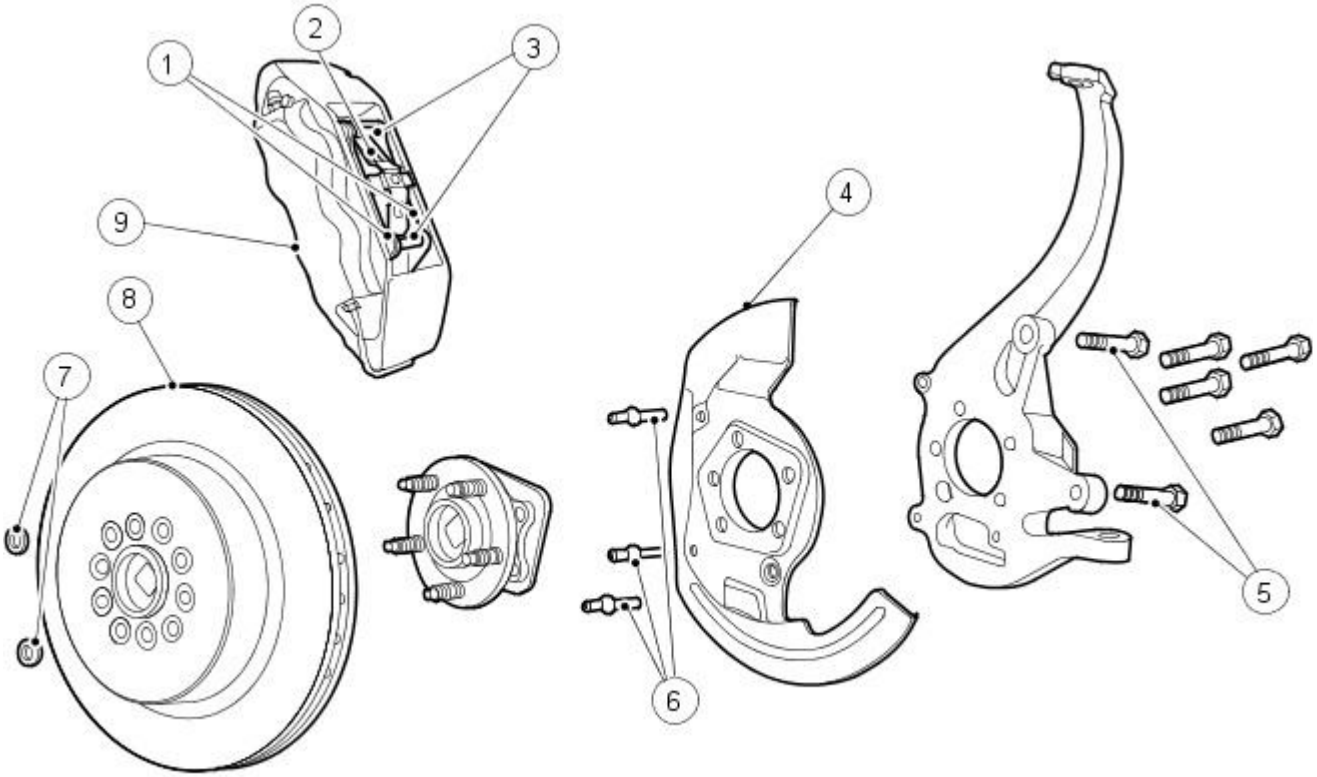


E 30067

| Item | Part Number | Description |
|---|---|---|
| 1 | — | Brake pads |
| 2 | — | Brake pad anti-rattle spring |
| 3 | — | Brake pad retaining pins |
| 4 | — | Brake disc shield |
| 5 | — | Brake caliper retaining bolts |
| 6 | — | Brake disc shield retaining rivets |
| 7 | — | Brake disc retaining clips |
| 8 | — | Brake disc |
| 9 | — | Brake caliper |

For vehicles with Brembo brakes, the brake system consists of the following components:

- Brake pads
- Four piston, fixed calipers
- Drilled brake discs
- Steel braided brake hoses

The brake caliper has two retaining bolts that attach the brake caliper to the wheel knuckle. These are of four piston fixed type which makes sure that equal effort is applied through both brake pads. The hydraulic system provides separate circuits for each pair of diagonally opposed wheels (i.e. left front, right rear and right front, left rear).

The brake disc is manufactured from cast iron and is of the vented type. It is retained on the hub by two retaining clips and the wheel studs.

GETtheMANUALS.org

# Front Disc Brake - Front Disc BrakeVIN Range: N52048->N99999

Description and Operation

Vehicles with standard brakes

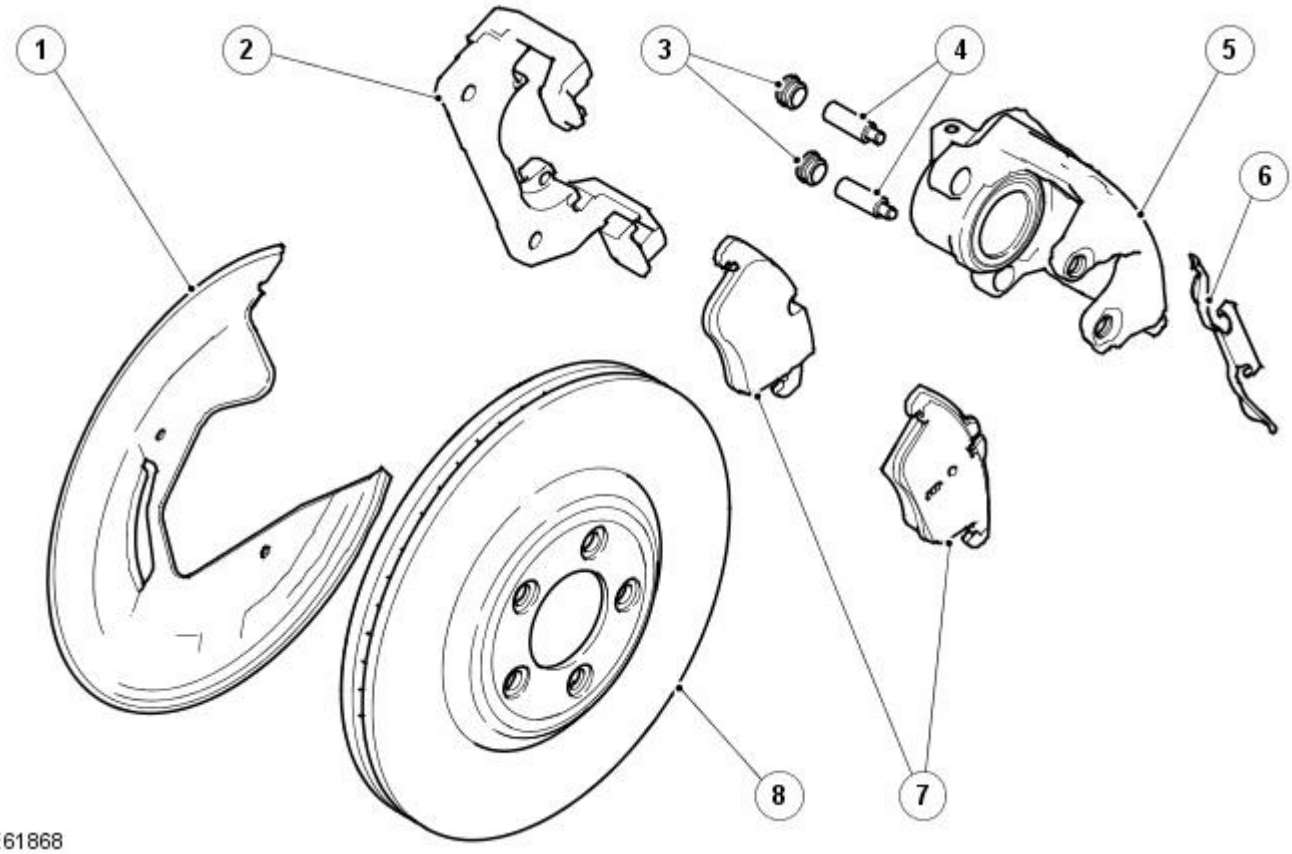


| Item | Part Number | Description |
|---|---|---|
| 1 | — | Brake disc shield |
| 2 | — | Brake caliper anchor plate |
| 3 | — | Brake caliper retaining bolt dust covers |
| 4 | — | Brake caliper retaining bolts |
| 5 | — | Brake caliper |
| 6 | — | Anti-rattle spring |
| 7 | — | Brake pads |
| 8 | — | Brake disc |

For vehicles with standard brakes, the brake system consists of the following components:

- Brake pads
- Single piston, floating calipers
- Brake discs
- Brake caliper anchor plates
- Steel braided brake hoses

The brake caliper has two retaining bolts that attach the brake caliper to the anchor plate. These are of single, sliding piston type. The anchor plate is attached to the wheel knuckle with two bolts. The hydraulic system provides separate circuits for each pair of diagonally opposed wheels (i.e. left front, right rear and right front, left rear).

The brake disc is manufactured from cast iron and is of the vented type. It is retained on the hub by two retaining clips and the wheel studs.

Vehicles with high performance brakes

GETtheMANUALS.org

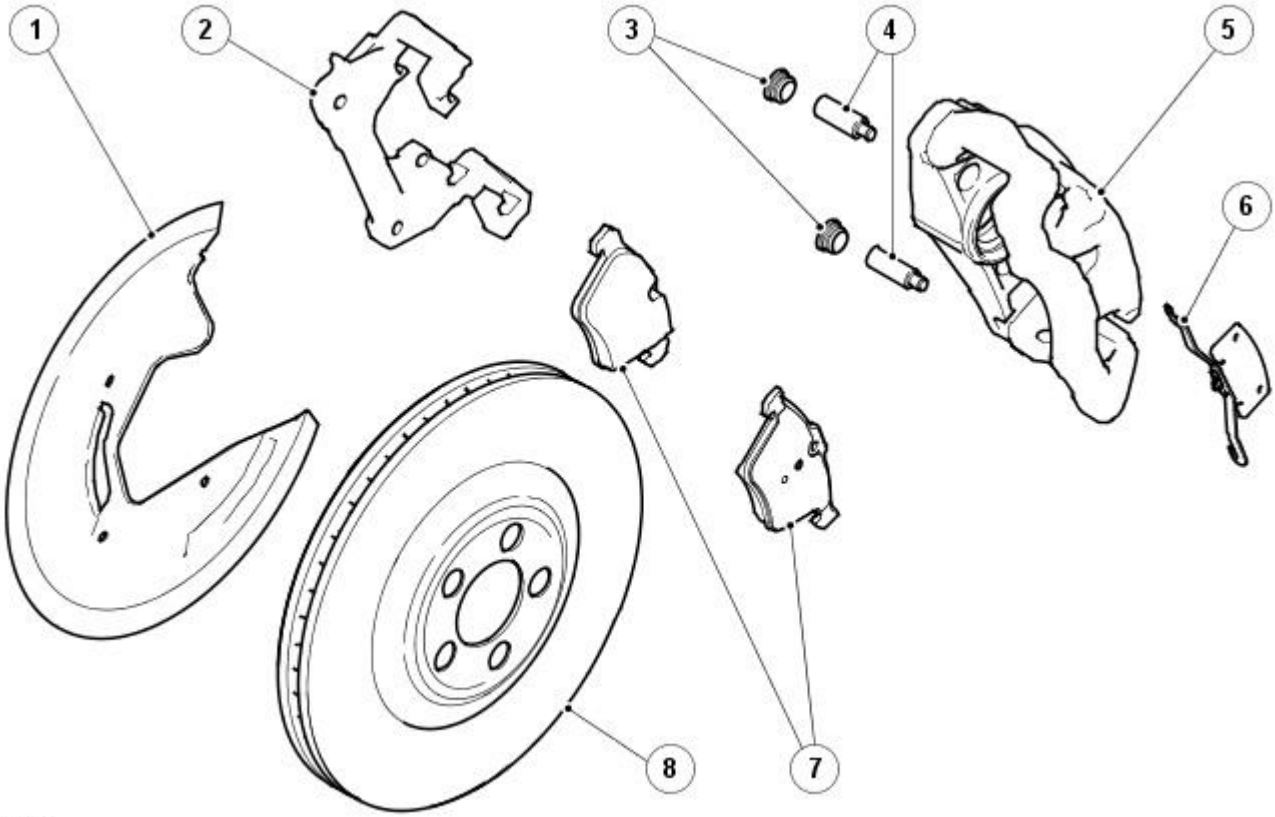


E61869

| Item | Part Number | Description |
|---|---|---|
| 1 | — | Brake disc shield |
| 2 | — | Brake caliper anchor plate |
| 3 | — | Brake caliper retaining bolt dust covers |
| 4 | — | Brake caliper retaining bolts |
| 5 | — | Brake caliper |
| 6 | — | Anti-rattle spring |
| 7 | — | Brake pads |
| 8 | — | Brake disc |

For vehicles with high performance brakes, the brake system consists of the following components:

- Brake pads
- Single piston, fixed calipers
- Brake discs
- Steel braided brake hoses

The brake caliper has two retaining bolts that attach the brake caliper to the anchor plate. These are of single, sliding piston type. The anchor plate is attached to the wheel knuckle with two bolts. The hydraulic system provides separate circuits for each pair of diagonally opposed wheels (i.e. left front, right rear and right front, left rear).

The brake disc is manufactured from cast iron and is of the vented type. It is retained on the hub by two retaining clips and the wheel studs.

GETtheMANUALS.org

Published: 11-May-2011

# Front Disc Brake - Front Disc Brake

Diagnosis and Testing

For additional information, refer toSection 206-00 Brake System - General Information.

GETtheMANUALS.org

# Front Disc Brake - Brake Disc ShieldVehicles With: Standard Brakes

Removal and Installation

## Removal

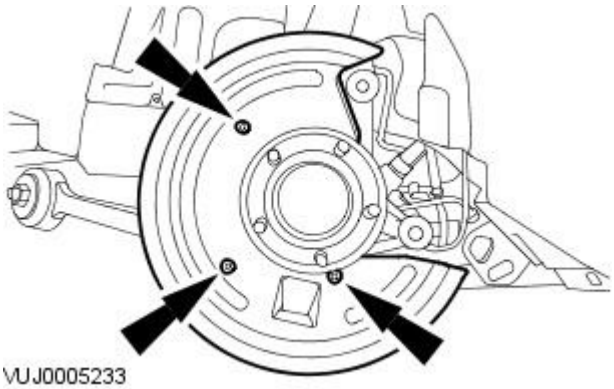


1. Remove the front brake disc. For additional information, refer to: (206-03 Front Disc Brake)

   Brake Disc - Vehicles With: Standard Brakes, VIN Range: M45255->N52047 (Removal and Installation),
   Brake Disc - Vehicles With: Standard Brakes, VIN Range: N52048->N99999 (Removal and Installation).

2. Remove the brake disc shield.
   - Remove and discard the brake disc shield retaining rivets.

## Installation

1. To install, reverse the removal procedure.
   - Install new brake disc shield retaining rivets.

GETtheMANUALS.org

# Rear Disc Brake -

**Lubricants, Fluids, sealers and Adhesives**

CAUTION: Do not use brake fluid ITT Super Dot 4 on 2006my vehicles onwards. Failure to follow this instruction may result in damage to the vehicle.

• NOTE: Brake fluid ITT Super Dot 4 has now been superseded by Shell ESL Super Dot 4 which is the Jaguar recommended brake fluid. Shell ESL Super Dot 4 can be used on all model years.

| Item | Specification |
|---|---|
| Brake fluid | ITT Super Dot 4 |
| Brake fluid | Shell ESL Super Dot 4 |
| Brake caliper slide pin grease | Klueber GLK1 |

**Torque Specifications**

| Description | Nm | lb-ft | lb-in |
|---|---|---|---|
| Brake caliper anchor plate - Vehicles with 2.5L, 2.7L Diesel, 3.0L or 4.2L engine | 103 | 76 | - |
| Brake caliper anchor plate - Vehicles with 2.5L, 2.7L Diesel, 3.0L or 4.2L engine | 34 | 25 | - |
| Brake caliper retaining bolts - Vehicles with high performance brakes | 70 | 51 | - |
| Brake hose to brake caliper - Vehicles with 2.5L, 2.7L Diesel, 3.0L or 4.2L engine | 35 | 26 | - |
| Brake hose to brake caliper - Vehicles with high performance brakes | 35 | 26 | - |

GETtheMANUALS.org

# Rear Disc Brake -

**Lubricants, Fluids, Sealers and Adhesives**

CAUTION: Do not use brake fluid ITT Super Dot 4 on 2006my vehicles onwards. Failure to follow this instruction may result in damage to the vehicle.

• NOTE: Brake fluid ITT Super Dot 4 has now been superseded by Shell ESL Super Dot 4 which is the Jaguar recommended brake fluid. Shell ESL Super Dot 4 can be used on all model years.

| Item | Specification |
|---|---|
| Brake fluid | ITT Super Dot 4 |
| Brake fluid | Shell ESL Super Dot 4 |

**Torque Specifications**

| Description | Nm | lb-ft | lb-in |
|---|---|---|---|
| Brake hose to brake caliper | 35 | 26 | - |
| Brake caliper anchor plate | 103 | 76 | - |
| Brake caliper retaining bolts | 28 | 21 | - |
| Brake caliper logo badge retaining screws - Vehicles with high performance brakes | 5 | 4 | - |

GETtheMANUALS.org

# Rear Disc Brake - Rear Disc BrakeVIN Range: M45255->N52047

Description and Operation

Vehicles without Brembo brakes

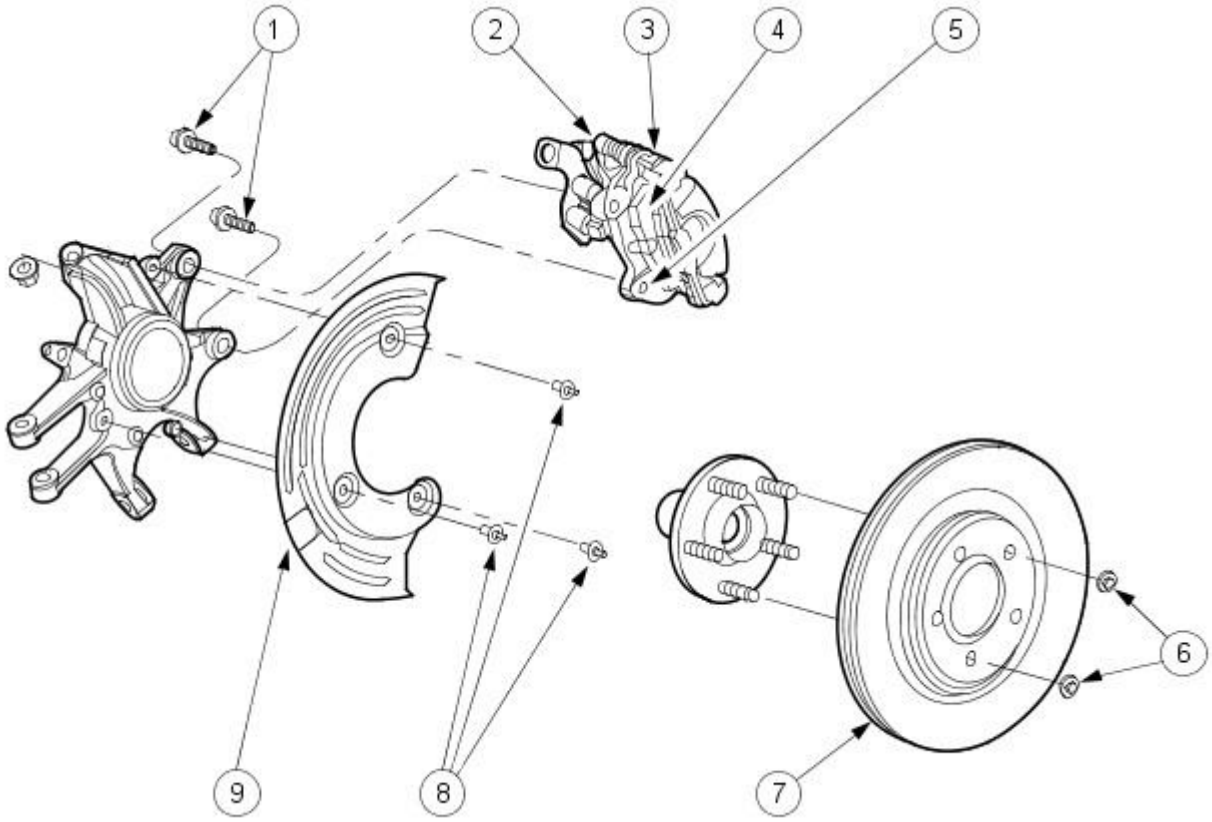


E30174

| Item | Part Number | Description |
|---|---|---|
| 1 | — | Brake caliper anchor plate retaining bolts |
| 2 | — | Brake caliper guide pin retaining bolt |
| 3 | — | Brake caliper |
| 4 | — | Brake pads |
| 5 | — | Brake caliper anchor plate |
| 6 | — | Brake disc retaining clips |
| 7 | — | Brake disc |
| 8 | — | Brake disc shield retaining rivets |
| 9 | — | Brake disc shield |

For vehicles without Brembo brakes, the brake system consists of the following components:

- Brake pads
- Single piston, floating calipers
- Brake discs
- Brake caliper anchor plates
- Steel braided brake hoses

The brake caliper has two retaining bolts that attach the brake caliper to the anchor plate. These are of single, sliding piston type which makes sure equal effort is applied through both brake pads. The anchor plate is attached to the wheel knuckle with two bolts. The hydraulic system provides separate circuits for each pair of diagonally opposed wheels (i.e. left front, right rear and right front, left rear).

The brake disc is manufactured from cast iron and is of the vented type. It is retained on the hub by two retaining clips and the wheel studs.

The rear brake caliper incorporates the parking brake of which is self adjusting according to brake pad wear.

Vehicles with Brembo brakes

GETtheMANUALS.org

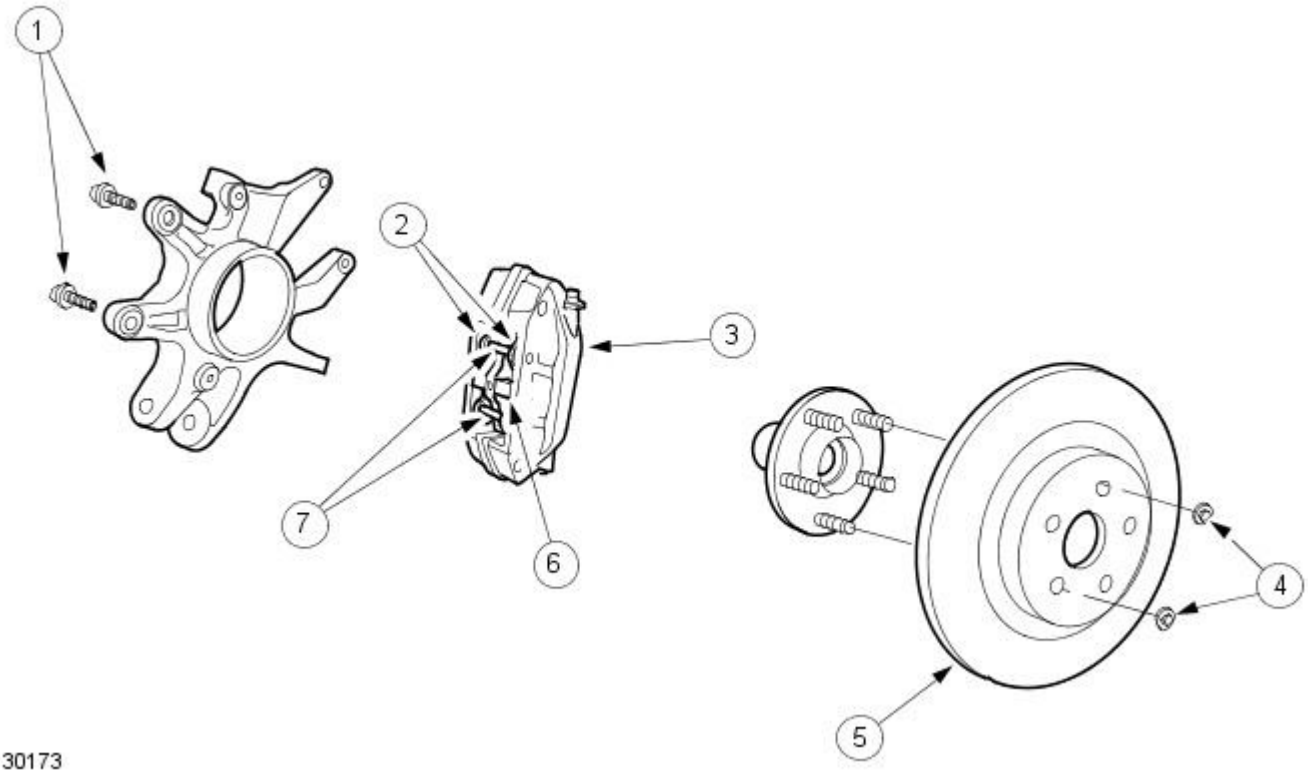


| Item | Part Number | Description |
|---|---|---|
| 1 | — | Brake caliper retaining bolts |
| 2 | — | Brake pads |
| 3 | — | Brake caliper |
| 4 | — | Brake disc retaining clips |
| 5 | — | Brake disc |
| 6 | — | Brake pad anti-rattle spring |
| 7 | — | Brake pad retaining pins |

For vehicles with Brembo brakes, the brake system consists of the following components:

- Brake pads
- Four piston, fixed calipers
- Brake discs
- Steel braided brake hoses

The brake caliper has two retaining bolts that attach the brake caliper to the wheel knuckle. These are of four piston fixed type which makes sure that equal effort is applied through both brake pads. The hydraulic system provides separate circuits for each pair of diagonally opposed wheels (i.e. left front, right rear and right front, left rear).

The brake disc is manufactured from cast iron and is of the solid type. It is retained on the hub by two retaining clips and the wheel studs.

GETtheMANUALS.org

# Rear Disc Brake - Rear Disc BrakeVIN Range: N52048->N99999

Description and Operation

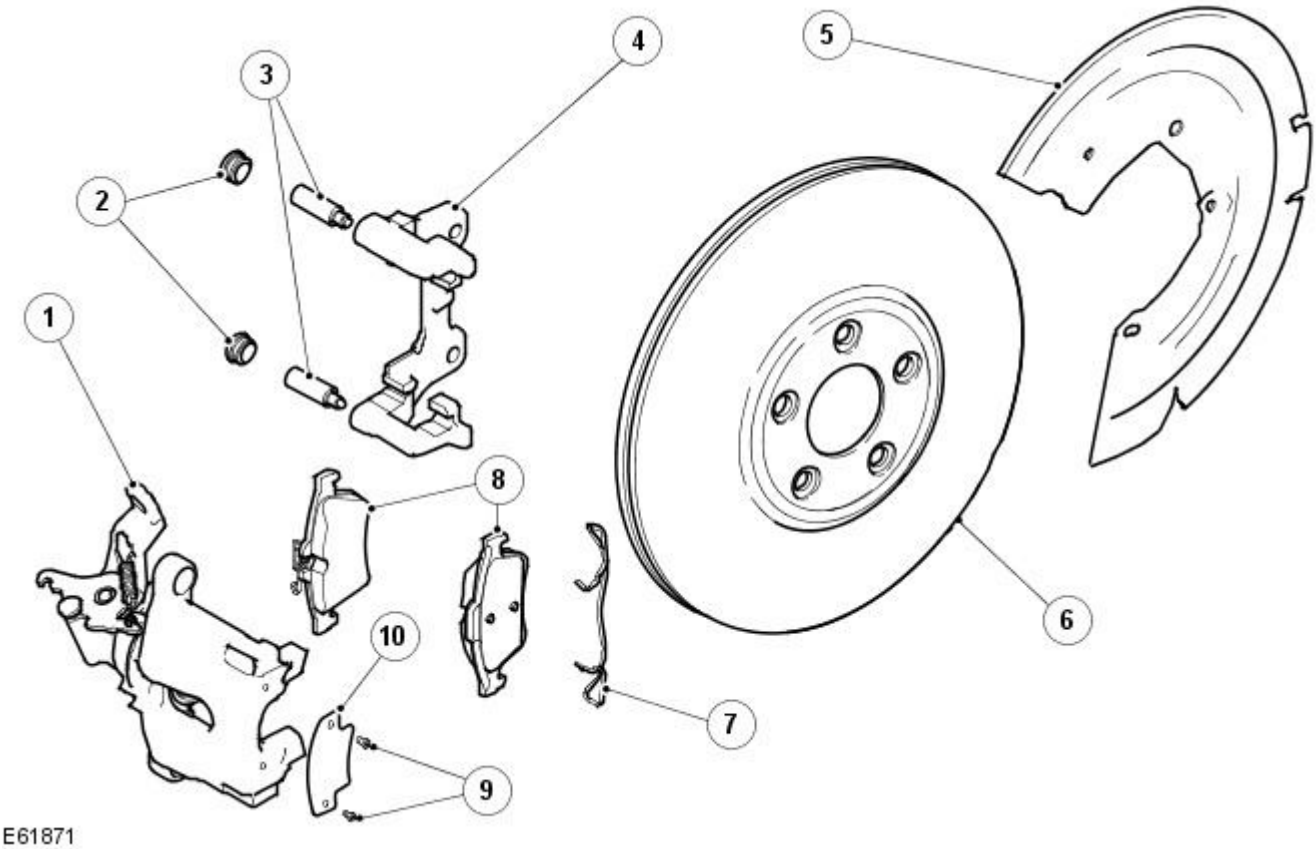


| Item | Part Number | Description |
|---|---|---|
| 1 | — | Brake caliper |
| 2 | — | Brake caliper retaining bolt dust covers |
| 3 | — | Brake caliper retaining bolts |
| 4 | — | Brake caliper anchor plate |
| 5 | — | Brake disc shield |
| 6 | — | Brake disc |
| 7 | — | Anti-rattle spring |
| 8 | — | Brake pads |
| 9 | — | Logo badge retaining screws (if equipped) |
| 10 | — | Logo badge (if equipped) |

The brake system consists of the following components:

- Brake pads
- Single piston, floating calipers
- Brake discs
- Brake caliper anchor plates
- Steel braided brake hoses

The brake caliper has two retaining bolts that attach the brake caliper to the anchor plate. These are of single, sliding piston type. In addition, the high performance caliper has a logo bagde which has to be removed when changing the brake pads.The anchor plate is attached to the wheel knuckle with two bolts. The hydraulic system provides separate circuits for each pair of diagonally opposed wheels (i.e. left front, right rear and right front, left rear).

The brake disc is manufactured from cast iron and is of the vented type. It is retained on the hub by two retaining clips and the wheel studs.

The rear brake caliper incorporates the parking brake of which is self adjusting according to brake pad wear.

GETtheMANUALS.org

Published: 11-May-2011

# Rear Disc Brake - Rear Disc Brake

Diagnosis and Testing

For additional information, refer toSection 206-00 Brake System - General Information.

GETtheMANUALS.org

# Rear Disc Brake - Brake CaliperVIN Range: N52048->N99999

Removal and Installation

| Special Tool(s) | |
|---|---|
| 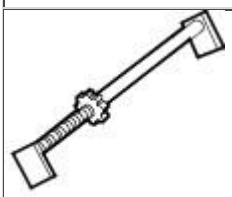 JDS9013 | Brake pedal hold-down tool<br><br>JDS 9013 |
| 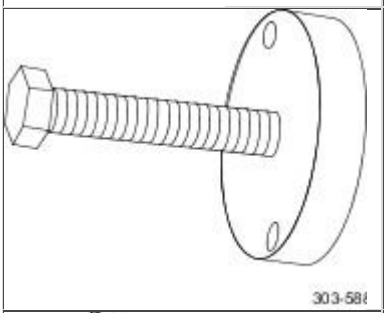 303-58 | Crankshaft pulley/damper remover<br><br>303-588 |
| 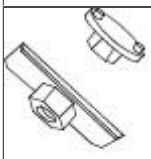 206-08 | Brake caliper piston retractor tool<br><br>206-080 |
| 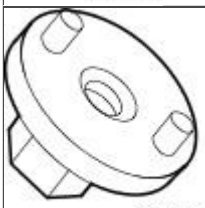 206-081 | Brake caliper piston retractor tool<br><br>206-081 |

## Removal

All vehicles

1. Carry out the parking brake cable tension release procedure.
   For additional information, refer to: Parking Brake Cable Tension Release - VIN Range: G45704->G99999 (206-05 Parking Brake and Actuation, General Procedures).
2. Remove both rear wheels and tires.
   For additional information, refer to: Wheel and Tire (204-04 Wheels and Tires, Removal and Installation).
3. NOTE: Left-hand shown, right-hand similar.

   Detach the parking brake cable.

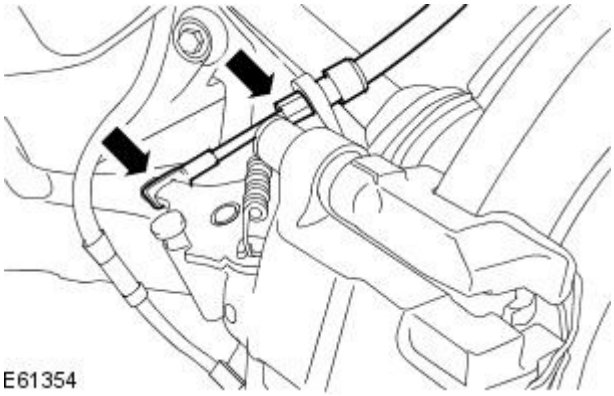


Vehicles with high performance brakes

GETtheMANUALS.org

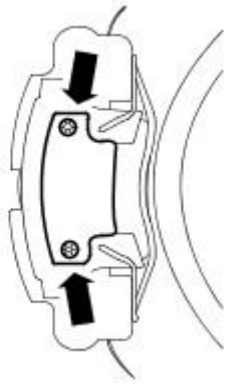

E61746

**4.** NOTE: Left-hand shown, right-hand similar.

Remove the logo badge.

All vehicles

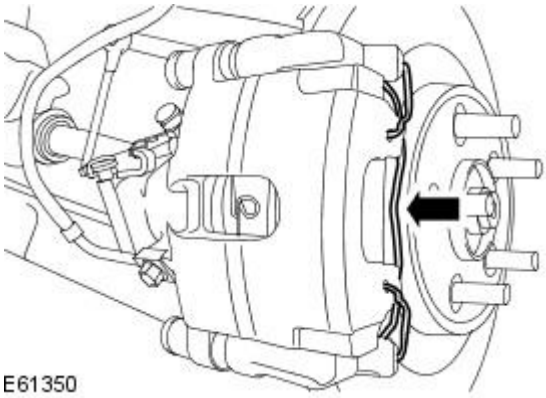

E61350

**5.** NOTE: Left-hand shown, right-hand similar.

Remove the anti-rattle spring.

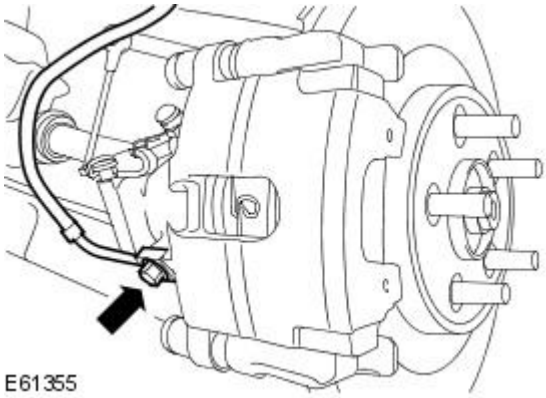

E61355

**6.** CAUTIONS:

Brake fluid contains polyglycol ethers and polyglycols. Avoid contact with the eyes. Wash hands thoroughly after handling, as prolonged contact may cause irritation and dermatitis. If brake fluid contacts the eyes, flush the eyes with cold water or eyewash solution and seek medical attention. If taken internally do not induce vomiting, seek immediate medical attention. Failure to follow these instructions may result in personal injury.

If brake fluid comes into contact with the paintwork, the affected area must be immediately washed down with cold water.

Cap the brake hose to prevent loss of fluid and prevent dirt ingress.

• NOTE: To prevent the loss of brake fluid, apply the brake pedal hold-down tool and adjust to hold the brake pedal down 40 mm (1.6 in).

• NOTE: Left-hand shown, right-hand similar.

Detach the brake hose.

- Remove and discard the sealing washers.

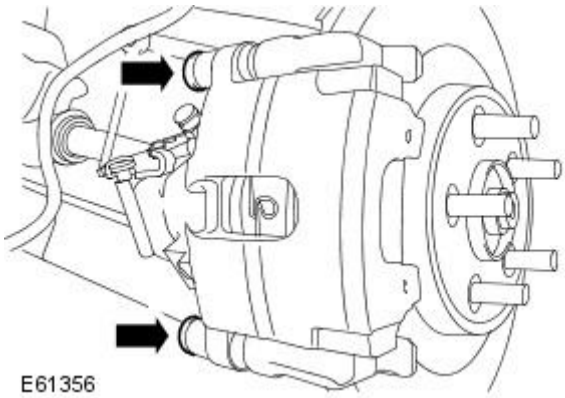

E61356

**7.** NOTE: Left-hand shown, right-hand similar.

Remove the brake caliper retaining bolt dust covers.

GETtheMANUALS.org

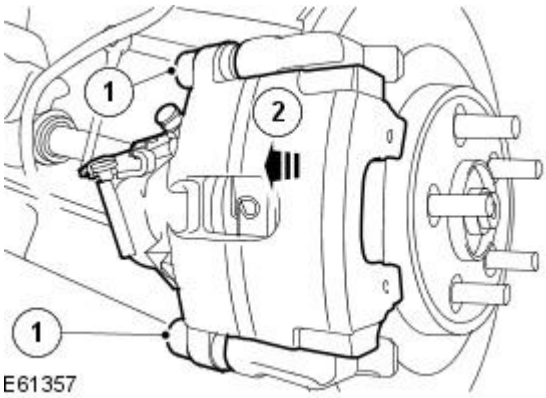


**8.** NOTE: Left-hand shown, right-hand similar.

Remove the brake caliper.

1. Remove the brake caliper retaining bolts.
2. Remove the brake caliper.

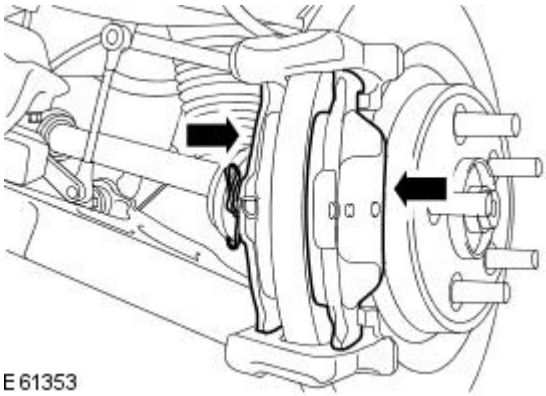


**9.** NOTE: Left-hand shown, right-hand similar.

Remove the brake pads.

## Installation

All vehicles

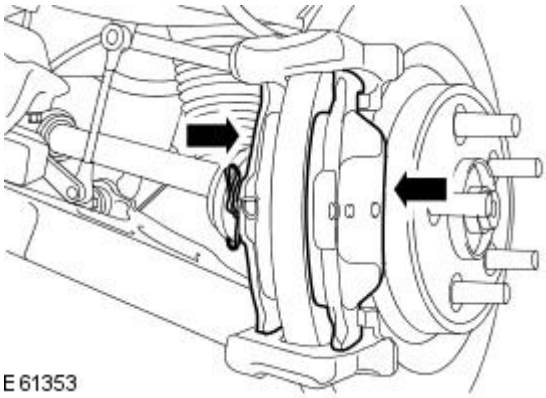


**1.** WARNING: Do not use compressed air to disperse brake dust into the atmosphere.

• CAUTIONS:

Brake pads must always be replaced in axle sets.

Make sure the brake disc faces are clean before installation.

• NOTE: Make sure that the brake pad with the anti-rattle spring is installed to the inboard side of the brake disc.

• NOTE: Left-hand shown, right-hand similar.

Install the brake pads.

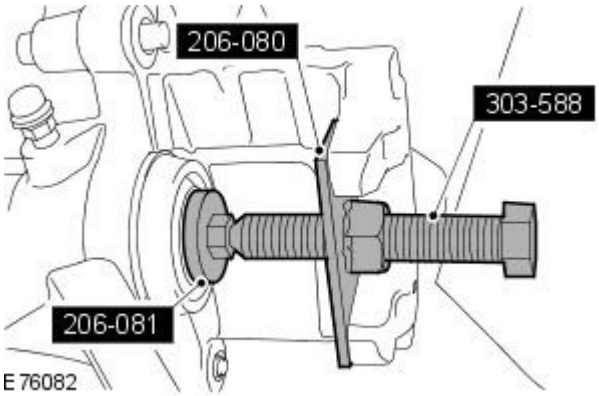


**2.** CAUTIONS:

As the piston is pushed back into the caliper housing, the brake fluid level in the reservoir will rise. Do not allow the reservoir to overflow.

If brake fluid comes into contact with the paintwork, the affected area must be immediately washed down with cold water.

• NOTE: Only the extraction bolt from special tool 303-588 is used.

• NOTE: Only the forcing plate from special tool 206-080 is used.

• NOTE: Right-hand shown, left-hand similar.

Using the special tools, fully retract the brake caliper piston.

GETtheMANUALS.org

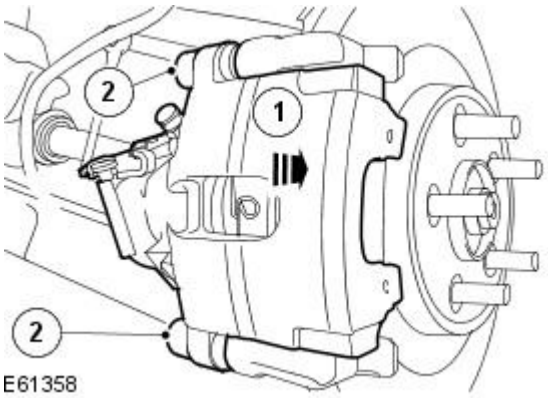


**3.** NOTE: Left-hand shown, right-hand similar.

Install the brake caliper retaining bolts.

1. Install the brake caliper.
2. Tighten to 28 Nm.

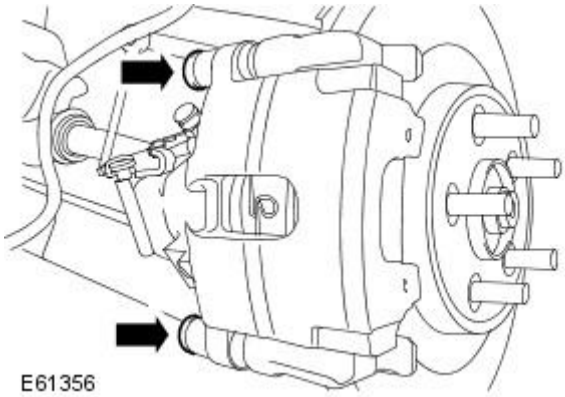


**4.** NOTE: Left-hand shown, right-hand similar.

Install the brake caliper retaining bolt dust covers.

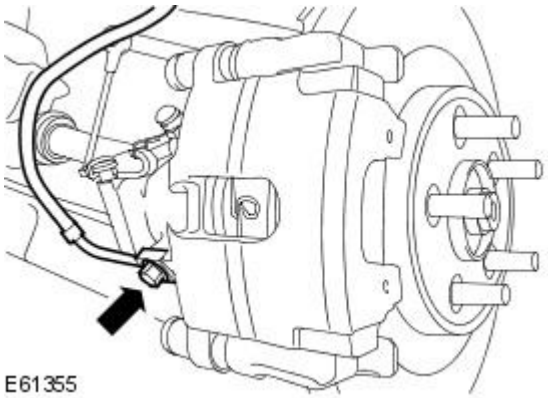


**5.** NOTE: Left-hand shown, right-hand similar.

Attach the brake hose.

- Install new sealing washers.
- Tighten to 35 Nm.

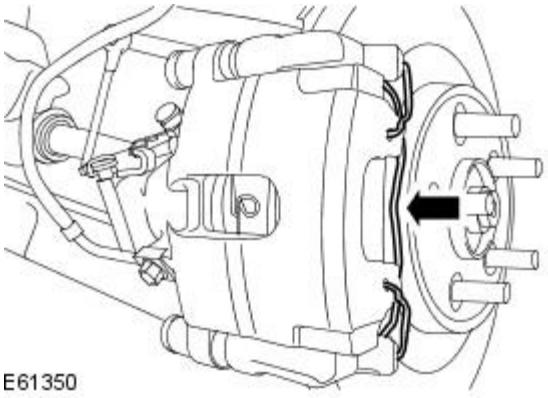


**6.** NOTE: Left-hand shown, right-hand similar.

Install the anti-rattle spring.

Vehicles with high performance brakes

GETtheMANUALS.org

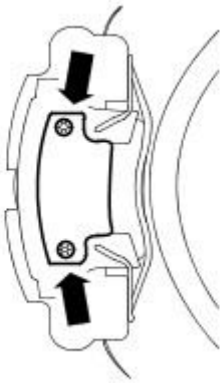


**7.** NOTE: Left-hand shown, right-hand similar.

Install the logo badge.

- Tighten to 5 Nm.

All vehicles

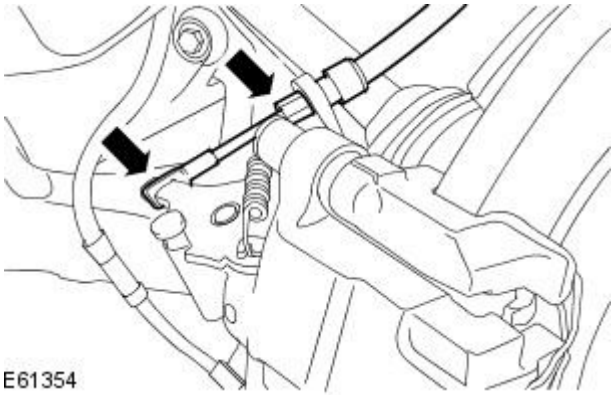


**8.** Attach the parking brake cable.

**9.** Remove the brake pedal hold-down tool.

**10.** Bleed the brake system.
For additional information, refer to: Brake System Bleeding (206-00 Brake System - General Information, General Procedures).

**11.** Install both rear wheels and tires.
For additional information, refer to: Wheel and Tire (204-04 Wheels and Tires, Removal and Installation).

GETtheMANUALS.org

# Rear Disc Brake - Brake DiscVIN Range: N52048->N99999

Removal and Installation

## Removal

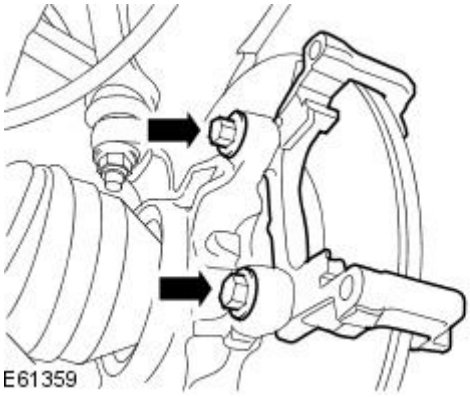


**1.** Remove the brake pads.
For additional information, refer to: Brake Pads - VIN Range: G45171->G99999 (206-04, Removal and Installation).

**2.** CAUTION: The brake caliper must be supported at all times.

• NOTE: Left-hand shown, right-hand similar.

Remove the brake caliper anchor plate.

- Remove and discard the brake caliper anchor plate retaining bolts.

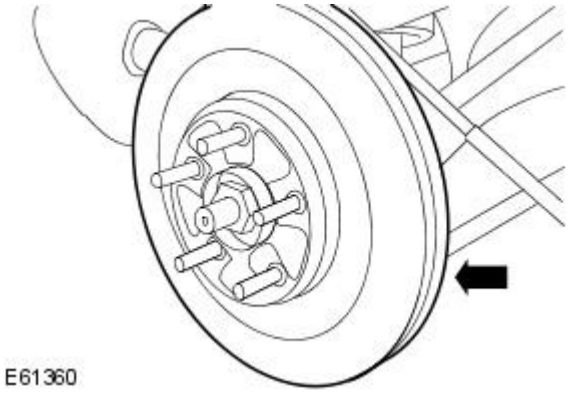


**3.** NOTE: If the same brake disc is to be installed, the tip of a hub must be marked with a corresponding part of the brake disc for alignment.

• NOTE: Left-hand shown, right-hand similar.

Remove the brake disc.

- Remove and discard the brake disc retaining clips.

## Installation

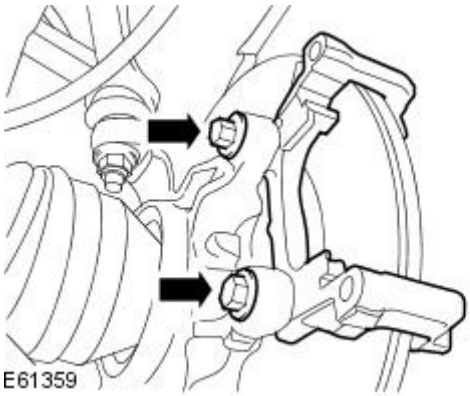


**1.** WARNING: Do not use compressed air to disperse brake dust into the atmosphere.

• CAUTIONS:

Brake discs must always be replaced in axle sets.

Make sure the brake disc faces are clean before installation.

• NOTE: Left-hand shown, right-hand similar.

To install, reverse the removal procedure.

- Tighten to 103 Nm.

GETtheMANUALS.org

# Rear Disc Brake - Brake Disc Shield

Removal and Installation

## Removal

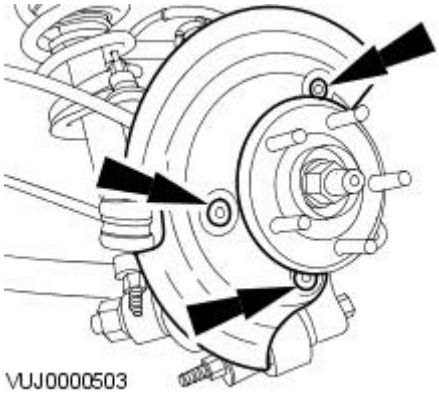


1. Remove the brake disc. For additional information, refer to: (206-04 Rear Disc Brake)

   Brake Disc - Vehicles With: Standard Brakes, VIN Range: M45255->N52047 (Removal and Installation),
   Brake Disc - Vehicles With: High Performance Brakes, VIN Range: M45255->N52047 (Removal and Installation),
   Brake Disc - VIN Range: N52048->N99999 (Removal and Installation).

2. Remove the brake disc shield.
   - Drill out the rivets.

## Installation

1. To install, reverse the removal procedure.
   - Install new rivets.

GETtheMANUALS.org

# Rear Disc Brake - Brake PadsVIN Range: N52048->N99999

Removal and Installation

| Special Tool(s) | |
|---|---|
| 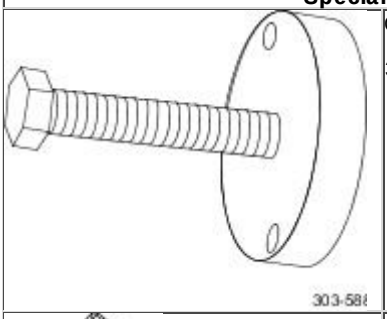 | Crankshaft pulley/damper remover<br><br>303-588 |
| 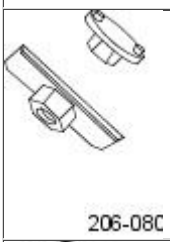 | Brake caliper piston retractor tool<br><br>206-080 |
| | Brake caliper piston retractor tool<br><br>206-081 |

## Removal

All vehicles

**1.** CAUTION: Whilst carrying out rear parking brake related service procedures, the tension on the rear parking brake release actuator will need to be released. Failure to follow this instruction may result in the parking brake to function incorrectly or become inoperative.

Carry out the parking brake cable tension release.
For additional information, refer to: Parking Brake Cable Tension Release (206-05 Parking Brake and Actuation, General Procedures).

**2.** Remove both rear wheels and tires.
For additional information, refer to: Wheel and Tire (204-04 Wheels and Tires, Removal and Installation).

Vehicles with high performance brakes

**3.** Remove the logo badge.

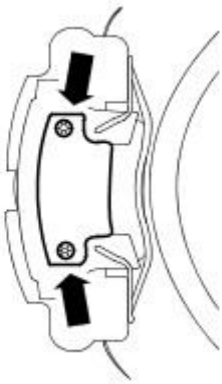

E61746

All vehicles

GETtheMANUALS.org

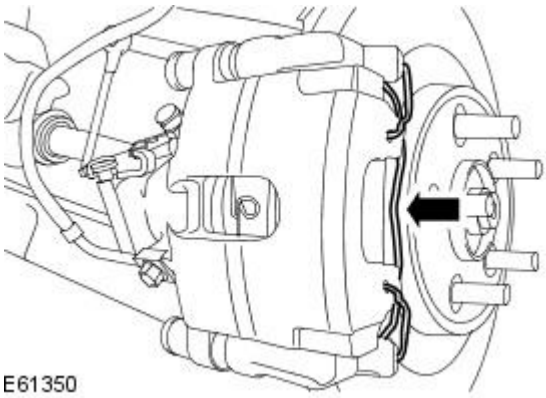


**4.** NOTE: Left-hand shown, right-hand similar.

Remove the anti-rattle spring.

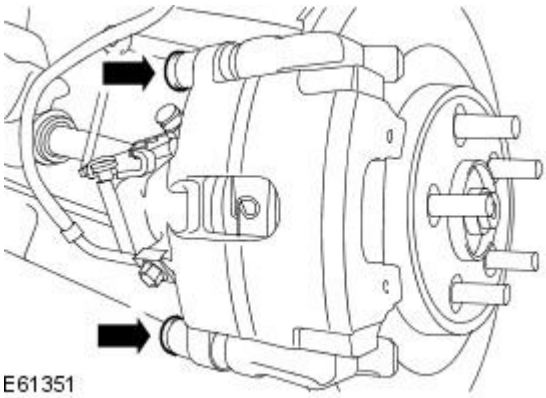


**5.** NOTE: Left-hand shown, right-hand similar.

Remove the brake caliper retaining bolt dust covers.

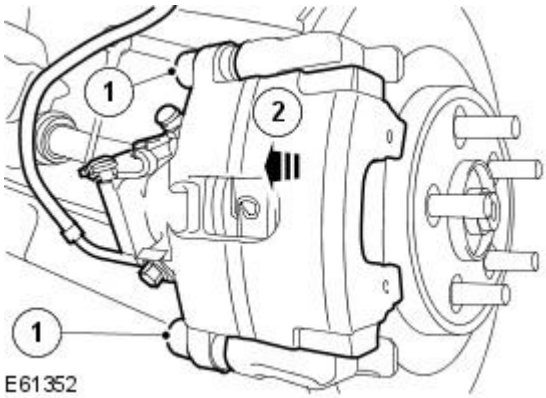


**6.** CAUTION: The brake caliper must be supported at all times.

- NOTE: Left-hand shown, right-hand similar.

Detach the brake caliper.

1. Remove the brake caliper retaining bolts.
2. Detach the brake caliper.

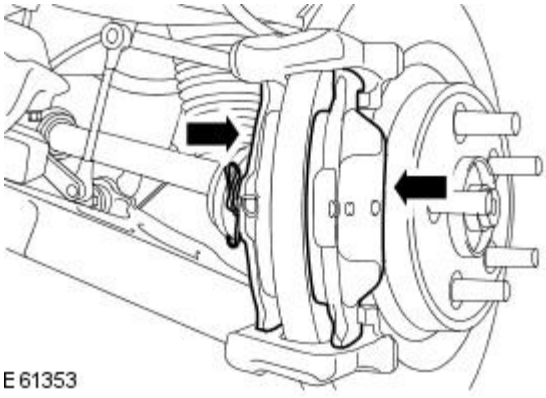


**7.** NOTE: Left-hand shown, right-hand similar.

Remove the brake pads.

## Installation

GETtheMANUALS.org

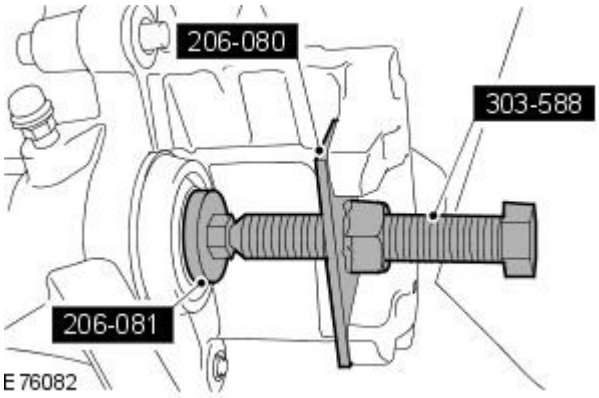


**1.** CAUTIONS:

As the piston is pushed back into the caliper housing, the brake fluid level in the reservoir will rise. Do not allow the reservoir to overflow.

If brake fluid comes into contact with the paintwork, the affected area must be immediately washed down with cold water.

• NOTE: Only the extraction bolt from special tool 303-588 is used.

• NOTE: Only the forcing plate from special tool 206-080 is used.

• NOTE: Right-hand shown, left-hand similar.

Using the special tools, fully retract the brake caliper piston.

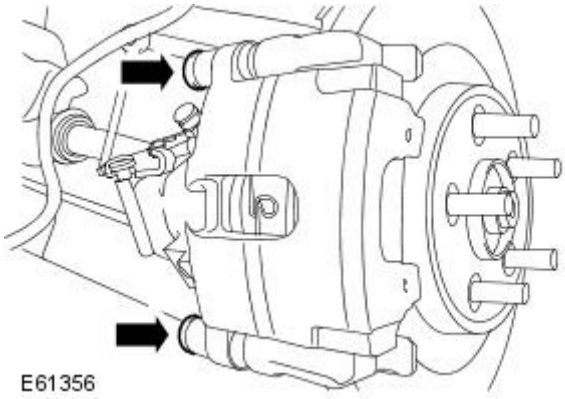


**2.** WARNING: Do not use compressed air to disperse brake dust into the atmosphere.

• CAUTIONS:

Make sure the brake disc faces are clean before installation.

Brake pads must always be replaced in axle sets.

• NOTE: Make sure that the brake pad with the anti-rattle spring is installed to the inboard side of the brake disc.

• NOTE: Left-hand shown, right-hand similar.

To install, reverse the removal procedure.

- Tighten to 28 Nm.

**3.** Tighten to 5 Nm.

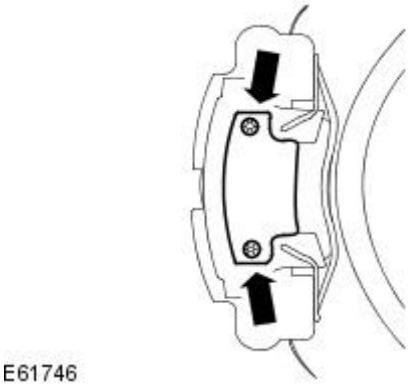


**4.** CAUTION: Calibrate the electric park brake using Jaguar approved diagnostic system. If the Jaguar approved diagnostic system is not available disconnect the battery for approximately 30 seconds, the vehicle will then prompt the driver to carry out the calibration procedure as per the vehicle hand book on re-connection.

Calibrate the electric parking brake module using the Jaguar approved diagnostic system.

**5.** NOTE: Do not start the engine or operate the electronic park brake before depressing the brake pedal.

Repeatedly depress the brake pedal until brake pressure is evident.

GETtheMANUALS.org

# Parking Brake and Actuation -

| Description | Nm | lb-ft | lb-in |
|---|---|---|---|
| Parking brake caliper retaining bolts - vehicles with Brembo brakes | 70 | 52 | - |

GETtheMANUALS.org

# Parking Brake and Actuation - Parking Brake

Description and Operation

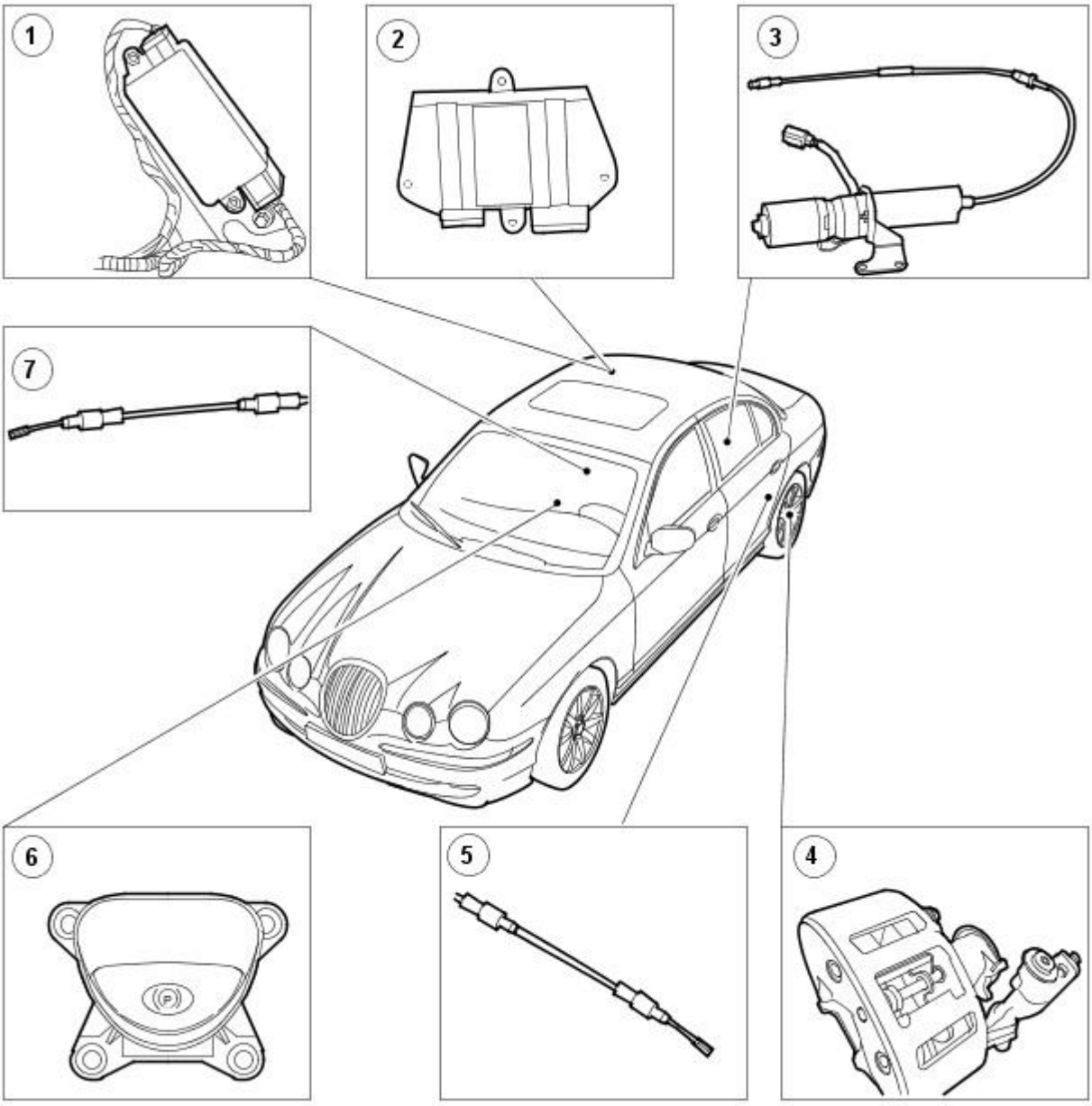


E31234

| Item | Part Number | Description |
|---|---|---|
| 1 | — | Parking brake module (vehicles built up to 01/2004) |
| 2 | - | Parking brake module (vehicles built 02/2004 onwards) |
| 3 | — | Parking brake actuator |
| 4 | — | Parking brake caliper (vehicles with Brembo brakes) |
| 5 | — | Parking brake caliper (vehicles without Brembo brakes) |
| 6 | - | Parking brake switch |
| 7 | - | Parking brake cable |

Electric Park Brake

The electric park brake (EPB) system is operated by a floor console mounted switch. The rear calipers are activated by cables from an electric motor and actuator unit which is mounted on the rear subframe. Overall control of the EPB is from a control module which is located in the luggage compartment behind the right-hand rear luggage compartment trim panel. On vehicles with Brembo brakes separate parking brake calipers are fitted.

EPB Operation

To apply the parking brake, pull the parking brake switch upwards and release. The switch will then return to the neutral position and the parking brake low fluid warning light will illuminate on the instrument cluster. To release the parking brake set the ignition switch to position 2 or with the engine running, apply the footbrake and press the parking brake switch down. The parking brake is automatically released when the selector is moved from the 'P' position.

If the vehicle is stationary and the gear selector is in 'D' or 'R' and the parking brake is applied, then the parking brake will automatically release when the accelerator pedal is depressed.

The parking brake is automatically applied when the key is removed from the ignition switch. If the parking brake is required to be permanently released press and hold the parking brake switch down and at the same time remove the key. If the parking brake is operated while the vehicle is in motion the message 'PARKBRAKE ON' will be displayed on the message centre. The warning lamp in the instrument cluster will be illuminated and a warning chime will sound.

GETtheMANUALS.org

If the battery has been discharged or disconnected a message 'APPLY PARKBRAKE' will be displayed when the ignition is next switched on.

Apply the footbrake and pull the parking brake switch up to apply the parking brake. This is required to reset the parking brake system which will now function correctly.

GETtheMANUALS.org

# Parking Brake and Actuation - Parking BrakeVIN Range: M45255->N13088

Diagnosis and Testing

## Inspection and Verification

1. **1.** Verify the customer concern.
2. **2.** Visually inspect for obvious signs of mechanical or electrical damage.

| Mechanical | Electrical |
|---|---|
| Parking brake cable | Fuse(s) |
| Parking brake actuator | Wiring harness/electrical connectors |
| Parking brake caliper | Check for bent/corroded pins |
| Parking brake pads | Parking brake switch |
| Drop link caps | Parking brake module |

3. **3.** If an obvious cause for an observed or reported concern is found, correct the cause (if possible) before proceeding to the next step.
4. **4.** If the cause is not visually evident and the Jaguar approved diagnostic system is not available, use a suitable code reader to retrieve any fault codes before proceeding to the Diagnostic Trouble Code (DTC) Index Chart (or the Symptom Chart if no DTCs are set), for actions to take.

## Symptom Chart

| Symptom | Possible Sources | Action |
|---|---|---|
| The parking brake will not engage or release | • Cables fouled, trapped or damaged<br>• Cables incorrectly routed or fixed<br>• Rear lining wear<br>• Service brake incorrectly adjusted following lining change<br>• Caliper malfunction<br>• Actuator malfunction | • Check the rear and primary cables for fouling, trapping or damage<br>• Check the cable routing between caliper and subframe mountings. Make sure the cables sit above the rear anti-roll bar drop link caps, and that the drop link caps are not damaged<br>• Check that the rear cable end fitting connector is correctly fitted into the caliper bracket, and is not damaged<br>• Check that the rear cable end fitting connector is correctly fitted into the subframe bracket and is not damaged<br>• Check the 'C' clip between the cable and the subframe for fit/damage<br>• Check that the cable is correctly located into the reaction and connector brackets<br>• Inspect the rear brake linings (parkbrake caliper linings for vehicles with supercharger) for wear<br>• Check the parkbrake cable for correct adjustment<br>• Fully retract the cables. Pump the brake pedal hard five times<br>• Check the condition of the rear caliper (parkbrake caliper for vehicles with supercharger). Make sure the caliper return spring is correctly fitted<br>• Check the actuator for damage and/or excessive noise in normal operation<br>• For additional information,<br>REFER to Parking Brake Cable Tension Release - /<br>Parking Brake Pads - Vehicles With: Brembo Brakes /<br>Parking Brake Rear Cables - /<br>Parking Brake Module - /<br>Parking Brake Release Actuator - in this section. |

## Driver Information Chart

| Warning | Message | Possible Source | Action |
|---|---|---|---|
| Yellow priority light | Apply parkbrake | Parkbrake not calibrated | Depress footbrake and apply parkbrake at the same time (the parkbrake should now be correctly calibrated. Check for correct function) |
| Yellow priority light/Red, flashing priority light | Parkbrake fault | • Parkbrake **Apply** switch circuit failure<br>• Parkbrake **Apply** switch circuit short to ground<br>• Parkbrake **Release** switch circuit failure<br>• Parkbrake **Release** switch circuit short to ground<br>• Parkbrake **Apply** and **Release** switch contacts energized simultaneously<br>• Parkbrake motor output short to ground<br>• Parkbrake motor output open circuit<br>• Parkbrake motor output battery short to ground | Check DTCs. Refer to the DTC index for relevant pinpoint test |
| Warning chime | Parkbrake on | Parkbrake applied with vehicle in motion | Release parkbrake |

## Diagnostic Trouble Code (DTC) index

| DTC | Description | Possible Source | Action |
|---|---|---|---|
| B1342 | Control module failure | • Power supply to module failure<br>• Ground to module failure<br>• Control module failure | For EPB control module power and ground tests, GO to Pinpoint Test A. |
| C1094 | Parkbrake **Apply** switch circuit failure | • Connector pin(s) bent<br>• Connector loose or corroded<br>• Harness fault | For EPB switch circuit tests, GO to Pinpoint Test B. |

GETtheMANUALS.com

| DTC | Description | Possible Source | Action |
|---|---|---|---|
| C1769 | Parkbrake **Apply** switch circuit short to ground | • Connector pin(s) bent<br>• Connector loose or corroded<br>• Harness fault | For EPB switch circuit tests, GO to Pinpoint Test B. |
| C1782 | Parkbrake **Release** switch circuit failure | • Connector pin(s) bent<br>• Connector loose or corroded<br>• Harness fault | For EPB switch circuit tests, GO to Pinpoint Test B. |
| C1783 | Parkbrake **Release** switch circuit short to ground | • Connector pin(s) bent<br>• Connector loose or corroded<br>• Harness fault | For EPB switch circuit tests, GO to Pinpoint Test B. |
| C1989 | Parkbrake **Apply** and **Release** switch contacts energized simultaneously | • Connector pin(s) bent<br>• Connector loose or corroded<br>• Harness fault | For EPB switch tests, GO to Pinpoint Test C. |
| C1784 | Parkbrake motor output short to ground | • Fuse failure<br>• Connector pin(s) bent<br>• Connector loose or corroded<br>• Harness fault | For EPB motor circuit tests, GO to Pinpoint Test D. |
| C1785 | Parkbrake motor output open circuit | • Fuse failure<br>• Connector pin(s) bent<br>• Connector loose or corroded<br>• Harness fault | For EPB motor circuit tests, GO to Pinpoint Test D. |
| C1786 | Parkbrake motor output battery short to ground | • Fuse failure<br>• Connector pin(s) bent<br>• Connector loose or corroded<br>• Harness fault | For EPB motor circuit tests, GO to Pinpoint Test D. |
| C1799 | Hall effect sensor circuit failure | • Hall effect circuit open circuit<br>• Hall effect circuit short circuit to ground | For hall effect sensor circuit tests, GO to Pinpoint Test E. |
| C1801 | Greater than expected motor current draw reached before expected travel (motor current draw compared to expected number of turns) | • Cables fouled, trapped or damaged<br>• Cables incorrectly routed or fixed<br>• Rear lining wear<br>• Service brake not correctly adjusted following lining change<br>• Caliper malfunction<br>• Actuator malfunction | Refer to the symptom chart for actions regarding mechanical operation |
| C1802 | Greater than expected travel for measured current draw (motor current draw compared to expected number of turns) | • Cables incorrectly routed or fixed<br>• Rear lining wear<br>• Service brake not correctly adjusted following lining change<br>• Caliper malfunction<br>• Actuator malfunction | Refer to the symptom chart for actions regarding mechanical operation |
| C1803 | Less than expected travel for parkbrake release | • Cables fouled, trapped or damaged<br>• Cables incorrectly routed or fixed<br>• Rear lining wear<br>• Service brake not correctly adjusted following lining change<br>• Caliper malfunction<br>• Actuator malfunction | Refer to the symptom chart for actions regarding mechanical operation |

## Pinpoint Tests

CAUTION: When probing connectors to take measurements in the course of the pinpoint tests, use the adaptor kit, part number 3548-1358-00.

• NOTE: Inspect connectors for signs of water ingress, and pins for damage and/or corrosion.

• NOTE: When performing electrical voltage or resistance tests, always use a digital multimeter (DMM) accurate to 3 decimal places, and with an up-to-date calibration certificate. When testing resistance, always take the resistance of the DMM leads into account.

• NOTE: Check and rectify basic faults before beginning diagnostic routines involving pinpoint tests.

| **PINPOINT TEST A : DTC B1342; CONTROL MODULE FAILURE** | |
|---|---|
| **TEST CONDITIONS** | **DETAILS/RESULTS/ACTIONS** |
| **A1: CHECK THE POWER SUPPLY TO THE EPB CONTROL MODULE** | |
| | 1 Disconnect the EPB control module electrical connector, CR50. |
| | 2 Measure the voltage between CR50, pin 01 (NW) and GROUND. |
| | Is the voltage less than 10 volts?<br>**Yes**<br>REPAIR the circuit between the EPB control module and battery. This circuit includes the battery junction box (fuse 32). For additional information, refer to the wiring diagrams. CLEAR the DTC. TEST the system for normal operation.<br>**No** |

GETtheMANUALS.org

| | |
|---|---|
| | GO to A2. |
| **A2: CHECK THE GROUND TO THE EPB CONTROL MODULE** | |
| | 1 Measure the resistance between CR50, pin 04 (B) and GROUND. |
| | Is the resistance greater than 5 ohms?<br>**Yes**<br>REPAIR the high resistance circuit. For additional information, refer to the wiring diagrams. CLEAR the DTC. TEST the system for normal operation.<br>**No**<br>Contact dealer technical support for advice on possible EPB control module failure. |

## PINPOINT TEST B : DTC C1094, C1769, C1782, C1783; PARK BRAKE APPLY SWITCH CIRCUIT FAILURE/SHORT TO GROUND, PARK BRAKE RELEASE SWITCH CIRCUIT FAILURE/SHORT TO GROUND

| TEST CONDITIONS | DETAILS/RESULTS/ACTIONS |
|---|---|
| **B1: CHECK THE SIGNAL GROUND TO THE EPB SWITCHPACK** | |
| | 1 Measure the resistance between TL82, pin 02 (BK) and GROUND. |
| | Is the resistance greater than 5 ohms?<br>**Yes**<br>GO to B2.<br>**No**<br>GO to B3. |
| **B2: CHECK THE SIGNAL GROUND CIRCUIT TO THE EPB SWITCHPACK FOR HIGH RESISTANCE** | |
| | 1 Disconnect the battery negative terminal. |
| | 2 Disconnect the EPB control module electrical connector, CR32. |
| | 3 Measure the resistance between TL82, pin 06 (WU) and CR32, pin 12 (WU). |
| | Is the resistance greater than 5 ohms?<br>**Yes**<br>REPAIR the high resistance circuit. For additional information, refer to the wiring diagrams. CLEAR the DTC. TEST the system for normal operation.<br>**No**<br>GO to B3. |
| **B3: CHECK THE VOLTAGE FROM THE EPB CONTROL MODULE TO THE SWITCHPACK** | |
| | 1 Reconnect the battery negative terminal. |
| | 2 Reconnect the EPB control module electrical connector, CR32. |
| | 3 Turn the ignition switch to the **ON** position. |
| | 4 Measure the voltage between TL82, pin 08 (WU) and GROUND. |
| | 5 Measure the voltage between TL82, pin 04 (RW) and GROUND. |
| | Is either voltage less than 3 volts?<br>**Yes**<br>GO to B4.<br>**No**<br>Check the EPB switch function. CLEAR the DTC. TEST the system for normal operation. |
| **B4: CHECK THE EPB CONTROL MODULE TO SWITCHPACK CIRCUITS FOR HIGH RESISTANCE** | |
| | 1 Disconnect the battery negative terminal. |
| | 2 Disconnect the EPB control module electrical connector, CR32. |
| | 3 Measure the resistance between TL82, pin 08 (WU) and CR32, pin 05 (WU). |
| | 4 Measure the resistance between TL82, pin 04 (RW) and CR32, pin 06 (RW). |
| | Is either resistance greater than 5 ohms?<br>**Yes**<br>REPAIR the high resistance circuit. For additional information, refer to the wiring diagrams. CLEAR the DTC. TEST the system for normal operation.<br>**No**<br>GO to B5. |
| **B5: CHECK THE EPB CONTROL MODULE TO SWITCHPACK CIRCUITS FOR SHORT TO GROUND** | |
| | 1 Reconnect the battery negative terminal. |
| | 2 Measure the resistance between TL82, pin 08 (WU) and GROUND. |
| | 3 Measure the resistance between TL82, pin 04 (RW) and GROUND. |
| | Is either resistance less than 10,000 ohms?<br>**Yes**<br>REPAIR the short circuit. For additional information, refer to the wiring diagrams. CLEAR the DTC. TEST the system for normal operation.<br>**No**<br>Contact dealer technical support for advice on possible EPB control module failure. |

## PINPOINT TEST C : DTC C1989; PARK BRAKE APPLY AND RELEASE SWITCH CONTACTS ENERGIZED SIMULTANEOUSLY

| TEST CONDITIONS | DETAILS/RESULTS/ACTIONS |
|---|---|
| **C1: CHECK PARK BRAKE APPLY SWITCH FUNCTION** | |
| | 1 Disconnect the EPB switchpack electrical connector, TL82. |
| | 2 Connect an ohmmeter between pins 06 and 08 of the switch. |
| | 3 Operate the switch to the **Apply** position. |
| | Does the ohmmeter switch between open and closed circuit as the switch is operated?<br>**Yes**<br>GO to C2.<br>**No**<br>INSTALL a new switchpack.<br>REFER to Parking Brake Switch - in this section.<br>CLEAR the DTC. TEST the system for normal operation. |
| **C2: CHECK PARK BRAKE RELEASE SWITCH FUNCTION** | |
| | 1 Connect an ohmmeter between pins 04 and 06 of the switch. |
| | 2 Operate the switch to the **Release** position. |
| | Does the ohmmeter switch between open and closed circuit as the switch is operated?<br>**Yes**<br>GO to C3.<br>**No**<br>INSTALL a new switchpack. |

GETtheMANUALS.org

| | |
|---|---|
| | REFER to Parking Brake Switch - in this section.<br>CLEAR the DTC. TEST the system for normal operation. |
| **C3: CHECK THE PARK BRAKE SWITCH FOR SHORT CIRCUIT** | |
| | 1 Connect an ohmmeter between pins 04 and 08 of the switch. |
| | Is the resistance less than 10,000 ohms?<br>**Yes**<br>INSTALL a new switchpack.<br>REFER to Parking Brake Switch - in this section.<br>CLEAR the DTC. TEST the system for normal operation.<br>**No**<br>Recheck DTCs. Contact dealer technical support for advice on possible EPB control module failure. |

## PINPOINT TEST D : DTC C1784, C1785, C1786; EPB MOTOR OUTPUT OPEN/SHORT CIRCUIT

| TEST CONDITIONS | DETAILS/RESULTS/ACTIONS |
|---|---|
| **D1: CHECK THE EPB MOTOR + CIRCUIT FOR OPEN CIRCUIT** | |
| | 1 Disconnect the battery negative terminal. |
| | 2 Disconnect the EPB motor electrical connector, CV07. |
| | 3 Disconnect the EPB control module electrical connector, CR50. |
| | 4 Measure the resistance between CV07, pin 01 (RW) and CR50, pin 03 (RW). |
| | Is the resistance greater than 5 ohms?<br>**Yes**<br>REPAIR the high resistance circuit. For additional information, refer to the wiring diagrams. CLEAR the DTC. TEST the system for normal operation.<br>**No**<br>GO to D2. |
| **D2: CHECK THE EPB MOTOR - CIRCUIT FOR OPEN CIRCUIT** | |
| | 1 Measure the resistance between CV07, pin 06 (GW) and CR50, pin 02 (GW). |
| | Is the resistance greater than 5 ohms?<br>**Yes**<br>REPAIR the high resistance circuit. For additional information, refer to the wiring diagrams. CLEAR the DTC. TEST the system for normal operation.<br>**No**<br>GO to D3. |
| **D3: CHECK THE EPB MOTOR + CIRCUIT FOR SHORT TO GROUND** | |
| | 1 Reconnect the battery negative terminal. |
| | 2 Measure the resistance between CV07, pin 01 (RW) and GROUND. |
| | Is the resistance less than 10,000 ohms?<br>**Yes**<br>REPAIR the short circuit. For additional information, refer to the wiring diagrams. CLEAR the DTC. TEST the system for normal operation.<br>**No**<br>GO to D4. |
| **D4: CHECK THE EPB MOTOR - CIRCUIT FOR SHORT TO GROUND** | |
| | 1 Measure the resistance between CV07, pin 06 (GW) and GROUND. |
| | Is the resistance less than 10,000 ohms?<br>**Yes**<br>REPAIR the short circuit. For additional information, refer to the wiring diagrams. CLEAR the DTC. TEST the system for normal operation.<br>**No**<br>GO to D5. |
| **D5: CHECK THE EPB MOTOR + AND - FOR SHORT CIRCUIT TO EACH OTHER** | |
| | 1 Measure the resistance between CV07, pins 06 (GW) and 01 (RW). |
| | Is the resistance less than 10,000 ohms?<br>**Yes**<br>REPAIR the short circuit. For additional information, refer to the wiring diagrams. CLEAR the DTC. TEST the system for normal operation.<br>**No**<br>GO to D6. |
| **D6: CHECK THE EPB MOTOR FOR OPEN CIRCUIT** | |
| | 1 Check for continuity between pins 01 and 06 of the motor. |
| | Is the circuit continuous?<br>**Yes**<br>Contact dealer technical support for advice on possible EPB control module failure.<br>**No**<br>INSTALL a new EPB motor.<br>REFER to Parking Brake Release Actuator - in this section.<br>CLEAR the DTC. TEST the system for normal operation. |

## PINPOINT TEST E : DTC C1799; HALL EFFECT SENSOR FAILURE

| TEST CONDITIONS | DETAILS/RESULTS/ACTIONS |
|---|---|
| **E1: CHECK THE HALL EFFECT SENSOR POWER SUPPLY** | |
| | 1 Disconnect the EPB motor electrical connector, CV07. |
| | 2 Measure the voltage between CV07, pin 03 (Y) and GROUND. |
| | Is the voltage less than 3 volts?<br>**Yes**<br>GO to E2.<br>**No**<br>GO to E3. |
| **E2: CHECK THE HALL EFFECT SENSOR POWER SUPPLY CIRCUIT FOR HIGH RESISTANCE** | |
| | 1 Disconnect the battery negative terminal. |
| | 2 Disconnect the EPB control module electrical connector, CR32. |
| | 3 Measure the resistance between CV07, pin 03 (Y) and CR32, pin 10 (Y). |

GETtheMANUALS.org

| | |
|---|---|
| | Is the resistance greater than 5 ohms?<br>**Yes**<br>REPAIR the high resistance circuit. For additional information, refer to the wiring diagrams. CLEAR the DTC. TEST the system for normal operation.<br>**No**<br>GO to E3. |
| **E3: CHECK THE HALL EFFECT SENSOR SIGNAL GROUND** | |
| | 1 Reconnect the battery negative terminal. |
| | 2 Measure the resistance between CV07, pin 05 (WU) and GROUND. |
| | Is the resistance greater than 5 ohms?<br>**Yes**<br>GO to E4.<br>**No**<br>GO to E5. |
| **E4: CHECK THE HALL EFFECT SENSOR SIGNAL GROUND CIRCUIT FOR HIGH RESISTANCE** | |
| | 1 Measure the resistance between CV07, pin 05 (WU) and CR32, pin 12 (WU). |
| | Is the resistance greater than 5 ohms?<br>**Yes**<br>REPAIR the high resistance circuit. For additional information, refer to the wiring diagrams. CLEAR the DTC. TEST the system for normal operation.<br>**No**<br>GO to E5. |
| **E5: CHECK THE HALL EFFECT SENSOR INPUT CIRCUIT FOR HIGH RESISTANCE** | |
| | 1 Measure the resistance between CV07, pin 04 (YB) and CR32, pin 04 (YB). |
| | Is the resistance greater than 5 ohms?<br>**Yes**<br>REPAIR the high resistance circuit. For additional information, refer to the wiring diagrams. CLEAR the DTC. TEST the system for normal operation.<br>**No**<br>INSTALL a new hall effect sensor. (The hall effect sensor is not available separately).<br>REFER to Parking Brake Release Actuator - in this section.<br>CLEAR the DTC. TEST the system for normal operation. If the DTC is repeated, contact dealer technical support for advice on possible EPB module failure. |

GETtheMANUALS.org

# Parking Brake and Actuation - Parking BrakeVIN Range: N13089->N52047

Diagnosis and Testing

## Overview

There are some changes to diagnostics for 2006 my, the most obvious of which will be the change to 7-digit diagnostic trouble codes (DTCs) from the familiar 5-digit.

Refer to the DTC index in this section for guidance on how to use these codes with the Jaguar approved diagnostic system or a scan tool.

For additional information on the description and operation of the system.
REFER to: Parking Brake (206-05 Parking Brake and Actuation, Description and Operation).

## Inspection and Verification

1. **1.** Verify the customer concern.
2. **2.** Visually inspect for obvious signs of mechanical or electrical damage.

**Visual Inspection Chart**

| Mechanical | Electrical |
|---|---|
| • Parking brake cable<br>• Parking brake actuator<br>• Parking brake caliper<br>• Parking brake pads<br>• Drop link caps | • Fuse(s)<br>• Wiring harness/electrical connectors<br>• Check for bent/corroded pins<br>• Parking brake switch<br>• Parking brake module |

3. **3.** If an obvious cause for an observed or reported concern is found, correct the cause (if possible) before proceeding to the next step.
4. **4.** If the cause is not visually evident use the Jaguar approved diagnostic system or a scan tool to retrieve the fault codes before proceeding to the diagnostic trouble code (DTC) Index.

## Symptom Chart

| Symptom | Possible Sources | Action |
|---|---|---|
| The parking brake will not engage or release | • Cables fouled, trapped or damaged<br>• Cables incorrectly routed or fixed<br>• Rear lining wear<br>• Service brake incorrectly adjusted following lining change<br>• Caliper malfunction<br>• Actuator malfunction | • Check the rear and primary cables for fouling, trapping or damage<br>• Check the cable routing between caliper and subframe mountings. Make sure the cables sit above the rear anti-roll bar drop link caps, and that the drop link caps are not damaged<br>• Check that the rear cable end fitting connector is correctly fitted into the caliper bracket, and is not damaged<br>• Check that the rear cable end fitting connector is correctly fitted into the subframe bracket and is not damaged<br>• Check the 'C' clip between the cable and the subframe for fit/damage<br>• Check that the cable is correctly located into the reaction and connector brackets<br>• Inspect the rear brake linings (parking brake caliper linings for vehicles with supercharger) for wear<br>• Check the parking brake cable for correct adjustment<br>• Fully retract the cables. Pump the brake pedal hard five times<br>• Check the condition of the rear caliper (parking brake caliper for vehicles with supercharger). Make sure the caliper return spring is correctly fitted<br>• Check the actuator for damage and/or excessive noise in normal operation<br>• For additional information, REFER to: (206-05 Parking Brake and Actuation)<br>Parking Brake Cable Tension Release (General Procedures),<br>Parking Brake Pads - Vehicles With: High Performance Brakes (Removal and Installation),<br>Parking Brake Cable (Removal and Installation),<br>Parking Brake Module (Removal and Installation),<br>Parking Brake Release Actuator (Removal and Installation). |

## DTC index

• NOTE: Generic scan tools may not read the codes listed, or may read only 5-digit codes. Match the 5 digits from the scan tool to the first 5 digits of the 7-digit code listed to identify the fault (the last 2 digits give extra information read by the manufacturer-approved diagnostic system).

| DTC | Description | Possible cause | Action |
|---|---|---|---|
| B216501 (vehicles with petrol engine only) | Gearshift position sensor circuit | • Gearshift position sensor circuit: short circuit to power<br>• Gearshift position sensor circuit: high resistance | For gearshift position sensor tests, GO to Pinpoint Test N. |
| B216501 (vehicles with diesel engine only) | Gearshift position sensor circuit | • Gearshift position sensor circuit: short circuit to ground<br>• Gearshift position sensor circuit: high resistance | For gearshift position sensor tests, GO to Pinpoint Test AB. |
| B216512 (vehicles with petrol engine only) | Gearshift position sensor circuit | • Gearshift position sensor circuit: short circuit to ground | For gearshift position sensor tests, GO to Pinpoint Test W. |
| B216512 (vehicles with diesel engine only) | Gearshift position sensor circuit | • Gearshift position sensor circuit: short circuit to power | For gearshift position sensor tests, GO to Pinpoint Test Y. |

GETtheMANUALS.org

| DTC | Description | Possible cause | Action |
|---|---|---|---|
| C109400 | Primary apply switch circuit | • Primary apply switch circuit: short circuit to power<br>• Primary apply switch circuit: high resistance | For primary apply switch circuit tests, GO to Pinpoint Test A. |
| C113111 (vehicles with petrol engine only) | Clutch pedal position sensor | • Clutch pedal position sensor circuit: short circuit to ground<br>• Clutch pedal position sensor circuit: high resistance | For clutch pedal position sensor tests, GO to Pinpoint Test Z. |
| C113111 (vehicles with diesel engine only) | Clutch pedal position sensor | • Clutch pedal position sensor circuit: short circuit to ground<br>• Clutch pedal position sensor circuit: high resistance | For clutch pedal position sensor tests, GO to Pinpoint Test C. |
| C113112 (vehicles with petrol engine only) | Clutch pedal position sensor | • Clutch pedal position sensor circuit: short circuit to power | For clutch pedal position sensor tests, GO to Pinpoint Test AA. |
| C113112 (vehicles with diesel engine only) | Clutch pedal position sensor | • Clutch pedal position sensor circuit: short circuit to power | For clutch pedal position sensor tests, GO to Pinpoint Test F. |
| C140800 | Primary release switch circuit | • Voltage out of range | For primary release switch circuit tests, GO to Pinpoint Test H. |
| C140900 | Primary apply switch circuit | • Voltage out of range | For primary apply switch circuit tests, GO to Pinpoint Test I. |
| C176900 | Primary apply switch circuit | • Primary apply switch circuit: short circuit to ground | For primary apply switch circuit tests, GO to Pinpoint Test J. |
| C178200 | Primary release switch circuit | • Primary release switch circuit: short circuit to power<br>• Primary release switch circuit: high resistance | For primary release switch circuit tests, GO to Pinpoint Test AC. |
| C178300 | Primary release switch circuit | • Primary release switch circuit: short circuit to ground | For primary release switch circuit tests, GO to Pinpoint Test L. |
| C178400 | Parking brake motor output | • Parking brake motor output: short circuit to ground | GO to Pinpoint Test M. |
| C178500 | Parking brake motor output | • Parking brake motor output: high resistance | GO to Pinpoint Test X. |
| C178600 | Parking brake motor output | • Parking brake motor output: short circuit to power | GO to Pinpoint Test P. |
| C179900 | Hall effect sensor | • Hall effect sensor: circuit fault<br>• Hall effect sensor: mechanical fault | For hall effect sensor tests, GO to Pinpoint Test Q. |
| C180100 | Greater than expected actuator current draw reached before expected travel (actuator current draw compared to expected number of turns) | • Cables fouled, trapped or damaged<br>• Cables incorrectly routed or fixed<br>• Rear lining wear<br>• Service brake not correctly adjusted following lining change<br>• Caliper malfunction<br>• Actuator malfunction | Refer to the symptom chart for actions regarding mechanical operation faults. |
| C180200 | Greater than expected travel for measured current draw (actuator current draw compared to expected number of turns) | • Cables incorrectly routed or fixed<br>• Rear lining wear<br>• Service brake not correctly adjusted following lining change<br>• Caliper malfunction<br>• Actuator malfunction | Refer to the symptom chart for actions regarding mechanical operation faults. |
| C180300 | Less than expected travel for parking brake release | • Parking brake motor does not fully release due to a mechanical fault | For motor release tests, GO to Pinpoint Test S. |
| C198900 | All switch circuits have an active voltage at the same time | • Parking brake apply and release switch contacts energised simultaneously | GO to Pinpoint Test U. |
| C1D0711 | Secondary apply switch | • Secondary apply switch circuit: short circuit to ground | For secondary apply switch tests, GO to Pinpoint Test E. |
| C1D0715 | Secondary apply switch | • Secondary apply switch circuit: short circuit to power<br>• Secondary apply switch circuit: high resistance | For secondary apply switch tests, GO to Pinpoint Test G. |
| C1D071C | Secondary apply switch | • Voltage out of range | For secondary apply switch tests, GO to Pinpoint Test B. |
| C1D0811 | Secondary release switch | • Secondary release switch circuit: short circuit to ground | For secondary release switch tests, GO to Pinpoint Test T. |

GETtheMANUALS.org

| DTC | Description | Possible cause | Action |
|---|---|---|---|
| C1D0815 | Secondary release switch | • Secondary release switch circuit: short circuit to power<br>• Secondary release switch circuit: high resistance | For secondary release switch tests, GO to Pinpoint Test R. |
| C1D081C | Secondary release switch | • Voltage out of range | For secondary release switch tests, GO to Pinpoint Test D. |
| C1D1564 | Brake switch | • Failed plausibility check with CAN data | For brake switch tests, GO to Pinpoint Test V. |
| C1D1614 | High power battery feed circuit | • High power battery feed circuit : short ciruit to ground<br>• High power battery feed circuit : high resistance | For high power feed tests, GO to Pinpoint Test K. |

## Pinpoint Tests

**PINPOINT TEST A : PRIMARY APPLY SWITCH CIRCUIT FAILURE**

| TEST CONDITIONS | DETAILS/RESULTS/ACTIONS |
|---|---|
| **A1: CHECK THE PRIMARY APPLY SIGNAL CIRCUIT FOR SHORT CIRCUIT TO POWER** | |
| | 1 Key off. |
| 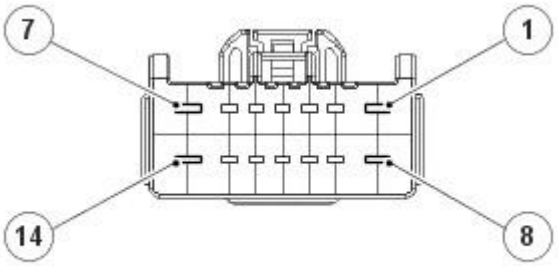 <br>E55103 | 2 Electric parking brake module connector 1, CA265 disconnected. |
| 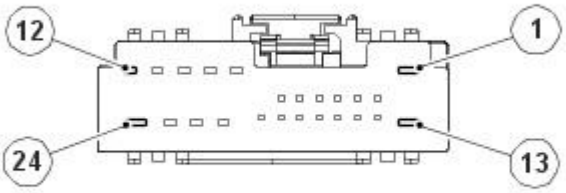 <br>E55104 | 3 Electric parking brake module connector 2, CA266 connector disconnected. |
| | 4 Key on, engine off.<br>5 Measure the resistance between:<br>**CA265, harness side** — **Vehicle battery**<br>Electric parking brake switch apply 1 - signal - Pin 10 — Positive terminal |
| | Is the resistance greater than 100 Kohms?<br>**Yes**<br>GO to A2.<br>**No**<br>GO to A8. |
| **A2: CHECK THE PRIMARY RELEASE SIGNAL CIRCUIT FOR SHORT CIRCUIT TO POWER** | |
| | 1 Measure the resistance between:<br>**CA265, harness side** — **Vehicle battery**<br>Electric parking brake switch apply 1 - signal - Pin 11 — Positive terminal |
| | Is the resistance greater than 100 Kohms?<br>**Yes**<br>GO to A3.<br>**No**<br>GO to A9. |
| **A3: CHECK THE SECONDARY APPLY SIGNAL CIRCUIT FOR SHORT CIRCUIT TO POWER** | |
| | 1 Measure the resistance between:<br>**CA266, harness side** — **Vehicle battery**<br>Electric parking brake switch apply 2 - signal - Pin 02 — Positive terminal |
| | Is the resistance greater than 100 Kohms?<br>**Yes**<br>GO to A4.<br>**No**<br>GO to A10. |
| **A4: CHECK THE SECONDARY RELEASE SIGNAL CIRCUIT FOR SHORT CIRCUIT TO POWER** | |

GETthemANUALS.org

1 Measure the resistance between:

| CA266, harness side | Vehicle battery |
|---|---|
| Electric parking brake switch release 2 - signal - Pin 14 | Positive terminal |

Is the resistance greater than 100 Kohms?

**Yes**

GO to A5.

**No**

GO to A11.

**A5: CHECK THE PRIMARY APPLY SIGNAL CIRCUIT FOR OPEN CIRCUIT**

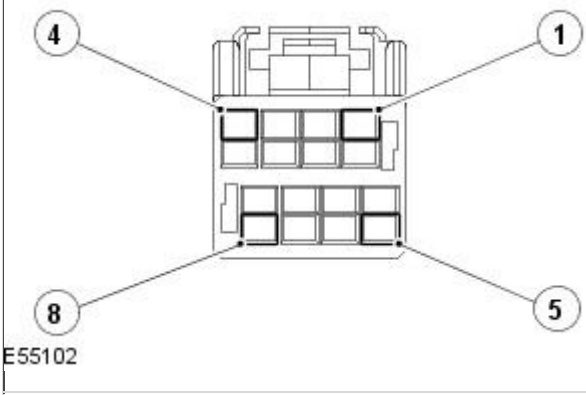


1 Electric parking brake switch connector, CA243 disconnected.

2 Measure the resistance between:

| CA265, harness side | CA243, harness side |
|---|---|
| Electric parking brake switch apply 1 - signal - Pin 10 | Electric parking brake switch apply 1 - signal - Pin 08 |

Is the resistance less than 10 ohms?

**Yes**

GO to A6.

**No**

REPAIR the open circuit. For additional information, refer to the wiring diagrams.

**A6: CHECK THE SWITCH RETURN CIRCUIT FOR OPEN CIRCUIT**

1 Measure the resistance between:

| CA266, harness side | CA243, harness side |
|---|---|
| Electric parking brake switch - switch return - Pin 06 | Electric parking brake switch - switch return - Pin 06 |

Is the resistance less than 10 ohms?

**Yes**

GO to A7.

**No**

REPAIR the open circuit. For additional information, refer to the wiring diagrams.

**A7: CHECK THE ELECTRIC PARKING BRAKE SWITCH**

1 Measure the resistance between:

| CA243, component side | CA243, component side |
|---|---|
| Electric parking brake switch apply 1 - signal - Pin 08 | Electric parking brake switch - switch return - Pin 06 |

Is the resistance between 595 ohms - 611 ohms?

**Yes**

An intermittent fault may be present in the wiring harness. Visually check for chaffed wires or other physical damage to the harness. If no fault is found in the circuit, suspect the following component(s):- EPB module- EPB module connector CA265- EPB module connector CA266

**No**

INSTALL a new EPB switch.

REFER to: Parking Brake Switch (206-05 Parking Brake and Actuation, Removal and Installation).

**A8: CHECK IF THE SHORT CIRCUIT IS IN THE HARNESS OR THE SWITCH**

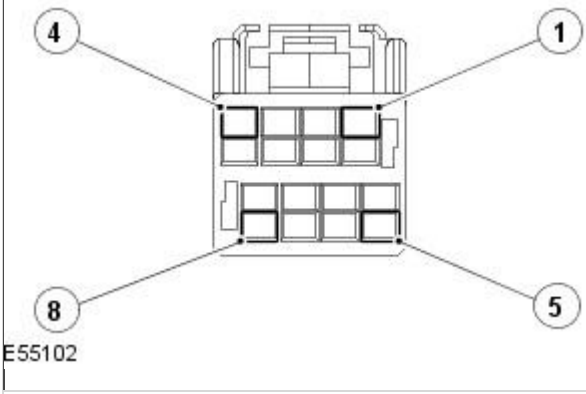


1 Electric parking brake switch connector, CA243 disconnected.

2 Measure the resistance between:

| CA265, harness side | Vehicle battery |
|---|---|
| Electric parking brake switch apply 1 - signal - Pin 10 | Positive terminal |

GETtheMANUALS.org

Is the resistance greater than 100 Kohms?

**Yes**

INSTALL a new EPB switch.
REFER to: Parking Brake Switch (206-05 Parking Brake and Actuation, Removal and Installation).

**No**

REPAIR the short circuit. For additional information, refer to the wiring diagrams.

**A9: CHECK IF THE SHORT CIRCUIT IS IN THE HARNESS OR THE SWITCH**

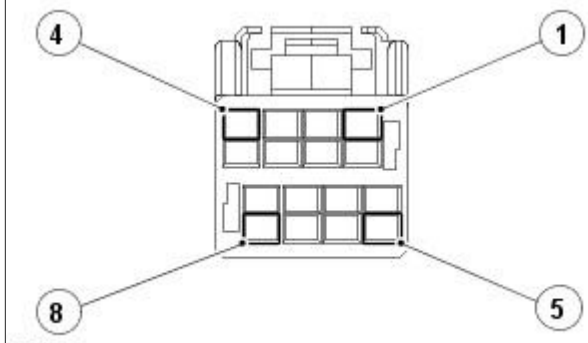

E55102

1 Electric parking brake switch connector, CA243 disconnected.

2 Measure the resistance between:

| CA265, harness side | Vehicle battery |
|---|---|
| Electric parking brake switch release 1 - signal - Pin 11 | Positive terminal |

Is the resistance greater than 100 Kohms?

**Yes**

INSTALL a new EPB switch.
REFER to: Parking Brake Switch (206-05 Parking Brake and Actuation, Removal and Installation).

**No**

REPAIR the short circuit. For additional information, refer to the wiring diagrams.

**A10: CHECK IF THE SHORT CIRCUIT IS IN THE HARNESS OR THE SWITCH**

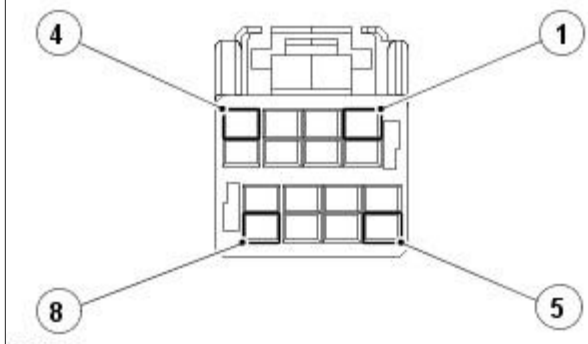

E55102

1 Electric parking brake switch connector, CA243 disconnected.

2 Measure the resistance between:

| CA266, harness side | Vehicle battery |
|---|---|
| Electric parking brake switch apply 2 - signal - Pin 02 | Positive terminal |

Is the resistance greater than 100 Kohms?

**Yes**

INSTALL a new EPB switch.
REFER to: Parking Brake Switch (206-05 Parking Brake and Actuation, Removal and Installation).

**No**

REPAIR the short circuit. For additional information, refer to the wiring diagrams.

**A11: CHECK IF THE SHORT CIRCUIT IS IN THE HARNESS OR THE SWITCH**

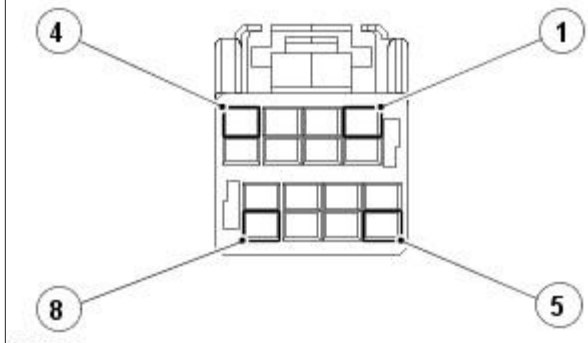

E55102

1 Electric parking brake switch connector, CA243 disconnected.

2 Measure the resistance between:

GETtheMANUAL.com

| CA266, harness side | Vehicle battery |
|---|---|
| Electric parking brake switch release 2 - signal - Pin 14 | Positive terminal |

| | |
|---|---|
| | Is the resistance greater than 100 Kohms?<br>**Yes**<br>INSTALL a new EPB switch.<br>REFER to: Parking Brake Switch (206-05 Parking Brake and Actuation, Removal and Installation).<br>**No**<br>REPAIR the short circuit. For additional information, refer to the wiring diagrams. |

| PINPOINT TEST B : SECONDARY APPLY SWITCH CIRCUIT VOLTAGE OUT OF RANGE | |
|---|---|
| **TEST CONDITIONS** | **DETAILS/RESULTS/ACTIONS** |
| **B1: CHECK THE SECONDARY SWITCH CIRCUIT RESISTANCE** | |
| | 1 Key off. |
| 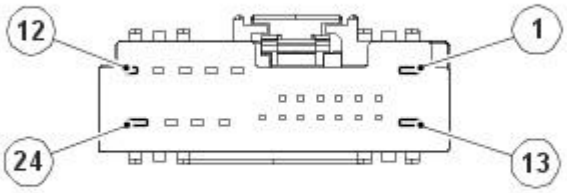 <br>E55104 | 2 Electric parking brake module connector 2, CA266 disconnected. |
| | 3 Key on, engine off. |
| | 4 Measure the resistance between:<br>**CA266, harness side**: Electric parking brake switch apply 2 - signal - Pin 02<br>**CA266, harness side**: Electric parking brake switch - switch return - Pin 06 |
| | Is the resistance between 595 ohms - 611 ohms?<br>**Yes**<br>An intermittent fault may be present in the wiring harness. Visually check for chaffed wires or other physical damage to the harness. If no fault is found in the circuit, suspect the following component(s):- EPB fault- EPB module connector CA266<br>**No**<br>INSTALL a new EPB switch.<br>REFER to: Parking Brake Switch (206-05 Parking Brake and Actuation, Removal and Installation). |

| PINPOINT TEST C : CLUTCH PEDAL POSITION SENSOR SHORT CIRCUIT TO GROUND OR OPEN CIRCUIT | |
|---|---|
| **TEST CONDITIONS** | **DETAILS/RESULTS/ACTIONS** |
| **C1: CHECK THE 5 VOLT SUPPLY CIRCUIT FOR SHORT CIRCUIT TO GROUND** | |
| | 1 Key off. |
| 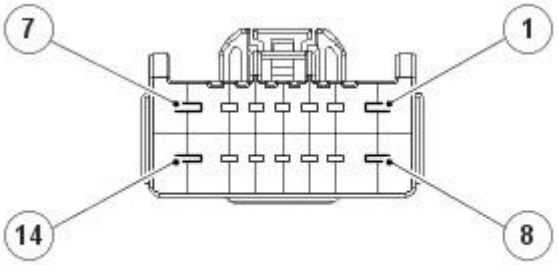 <br>E55103 | 2 Electric parking brake module connector 1, CA265 disconnected. |
| 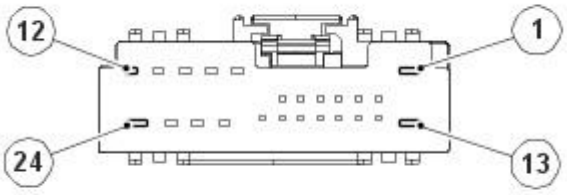 <br>E55104 | 3 Electric parking brake module connector 2, CA266 disconnected. |
| | 4 Key on, engine off. |

GETtheMANUALS.org

5 Measure the resistance between:

| CA265, harness side | Vehicle battery |
|---|---|
| Clutch position sensor - supply - Pin 05 | Negative terminal |

Is the resistance greater than 100 Kohms?

**Yes**

GO to C2.

**No**

GO to C6.

**C2: CHECK THE SIGNAL CIRCUIT FOR SHORT CIRCUIT TO GROUND**

1 Measure the resistance between:

| CA265, harness side | Vehicle battery |
|---|---|
| Clutch position sensor - signal - Pin 06 | Negative terminal |

Is the resistance greater than 100 Kohms?

**Yes**

GO to C3.

**No**

GO to C8.

**C3: CHECK THE SIGNAL CIRCUIT FOR OPEN CIRCUIT**

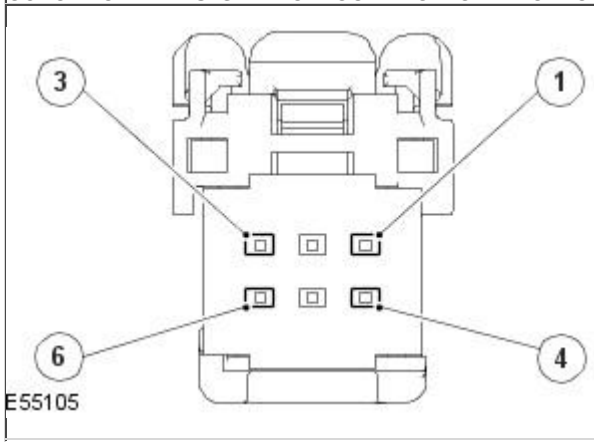


1 Clutch pedal position sensor (CLPS) connector, CA287 disconnected.

2 Measure the resistance between:

| CA265, harness side | CA287, harness side |
|---|---|
| Clutch position sensor - signal - Pin 06 | Clutch position sensor - signal - Pin 02 |

Is the resistance less than 10 ohms?

**Yes**

GO to C4.

**No**

REPAIR the open circuit. For additional information, refer to the wiring diagrams.

**C4: CHECK THE 5 VOLT SUPPLY CIRCUIT FOR OPEN CIRCUIT**

1 Measure the resistance between:

| CA265, harness side | CA287, harness side |
|---|---|
| Clutch position sensor - supply - Pin 05 | Clutch position sensor - supply - Pin 03 |

Is the resistance less than 10 ohms?

**Yes**

GO to C5.

**No**

REPAIR the open circuit. For additional information, refer to the wiring diagrams.

**C5: CHECK THE SENSOR RETURN CIRCUIT FOR OPEN CIRCUIT**

1 Measure the resistance between:

| CA266, harness side | CA287, harness side |
|---|---|
| Clutch position sensor - ground - Pin 03 | Clutch position sensor - ground - Pin 01 |

Is the resistance less than 10 ohms?

**Yes**

An intermittent fault may be present in the wiring harness. Visually check for chaffed wires or other physical damage to the harness. If no fault is found in the circuit, suspect the following component(s):- EPB module- CLPS- EPB module connector CA265- EPB module connector CA266- CLPS connector CA287

**No**

REPAIR the open circuit. For additional information, refer to the wiring diagrams.

**C6: CHECK IF THE SHORT CIRCUIT IS IN THE HARNESS OR THE SENSOR**

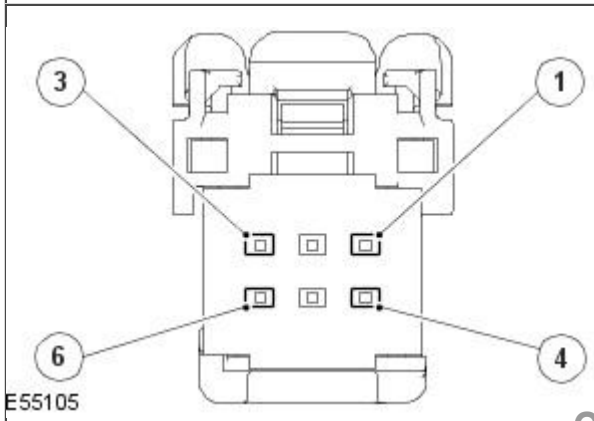


1 Clutch pedal position sensor (CLPS) connector, CA287 disconnected.

GETtheMANUALS.org

| | |
|---|---|
| | 2 Measure the resistance between: |

| CA265, harness side | Vehicle battery |
|---|---|
| Clutch position sensor - supply - Pin 05 | Negative terminal |

| | |
|---|---|
| | Is the resistance greater than 100 Kohms?<br>**Yes**<br>INSTALL a new CLPS.<br>**No**<br>GO to C7. |

**C7: CHECK IF THE SHORT CIRCUIT IS IN THE HARNESS OR THE SENSOR**

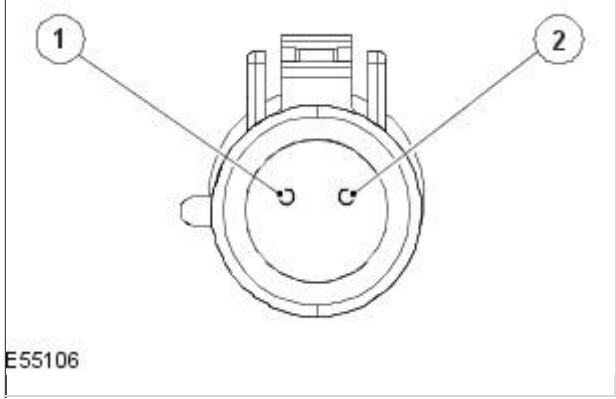


1 In-Gear (IG) Switch connector, GB03 disconnected (vehicles with petrol engine).

2 Measure the resistance between:

| CA265, harness side | Vehicle battery |
|---|---|
| Clutch position sensor - supply - Pin 05 | Negative terminal |

Is the resistance greater than 100 Kohms?

**Yes**

INSTALL a new In-gear switch.

**No**

REPAIR the short circuit. For additional information, refer to the wiring diagrams.

**C8: CHECK IF THE SHORT CIRCUIT IS IN THE HARNESS OR THE SENSOR**

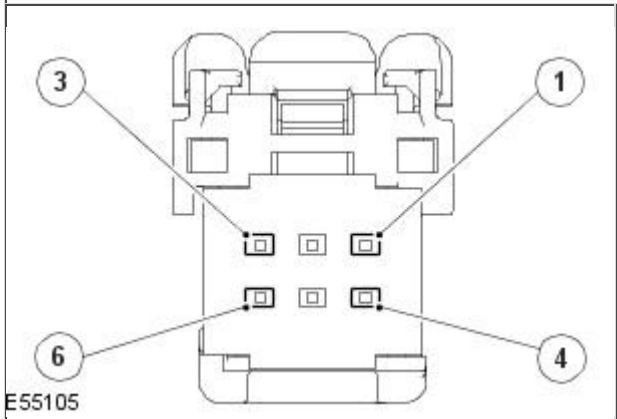


1 Clutch pedal position sensor (CLPS) connector, CA287 disconnected.

2 Measure the resistance between:

| CA265, harness side | Vehicle battery |
|---|---|
| Clutch position sensor - signal - Pin 06 | Negative terminal |

Is the resistance greater than 100 Kohms?

**Yes**

INSTALL a new CLPS.

**No**

REPAIR the short circuit. For additional information, refer to the wiring diagrams.

## PINPOINT TEST D : SECONDARY RELEASE SWITCH CIRCUIT VOLTAGE OUT OF RANGE

| TEST CONDITIONS | DETAILS/RESULTS/ACTIONS |
|---|---|

**D1: CHECK THE SECONDARY SWITCH CIRCUIT RESISTANCE**

1 Key off.

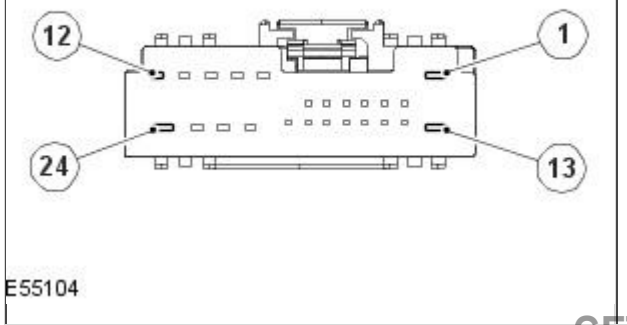


2 Electric parking brake module connector 2, CA266 disconnected.

GETtheMANUALS.org

3 Key on, engine off.

4 Measure the resistance between:

| CA266, harness side | CA266, harness side |
|---|---|
| Electric parking brake switch release 2 - signal - Pin 14 | Electric parking brake switch - switch return - Pin 06 |

Is the resistance between 595 ohms - 611 ohms?

**Yes**

An intermittent fault may be present in the wiring harness. Visually check for chaffed wires or other physical damage to the harness. If no fault is found in the circuit, suspect the following component(s):- EPB module- EPB module connector CA266

**No**

INSTALL a new EPB switch.
REFER to: Parking Brake Switch (206-05 Parking Brake and Actuation, Removal and Installation).

## PINPOINT TEST E : SECONDARY APPLY SWITCH CIRCUIT SHORT CIRCUIT TO GROUND

| TEST CONDITIONS | DETAILS/RESULTS/ACTIONS |
|---|---|

### E1: CHECK THE SECONDARY APPLY SIGNAL CIRCUIT FOR SHORT CIRCUIT TO GROUND

1 Key off.

2 Electric parking brake module connector 2, CA266 disconnected.

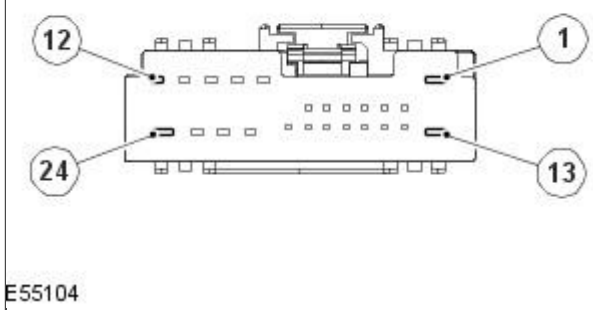


3 Key on, engine off.

4 Measure the resistance between:

| CA266, harness side | Vehicle battery |
|---|---|
| Electric parking brake switch apply 2 - signal - Pin 02 | Negative terminal |

Is the resistance greater than 100 Kohms?

**Yes**

An intermittent fault may be present in the wiring harness. Visually check for chaffed wires or other physical damage to the harness. If no fault is found in the circuit, suspect the following component(s):- EPB module- EPB module connector CA266

**No**

GO to E2.

### E2: CHECK IF THE SHORT CIRCUIT IS IN THE HARNESS OR THE SWITCH

1 Electric parking brake switch connector, CA243 disconnected.

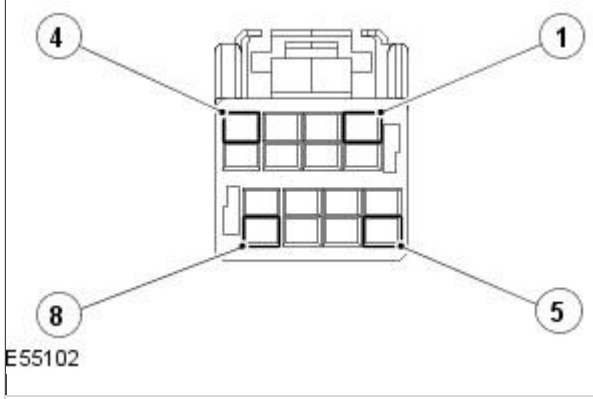


2 Measure the resistance between:

| CA266, harness side | Vehicle battery |
|---|---|
| Electric parking brake switch apply 2 - signal - Pin 02 | Negative terminal |

Is the resistance greater than 100 Kohms?

**Yes**

INSTALL a new EPB switch.
REFER to: Parking Brake Switch (206-05 Parking Brake and Actuation, Removal and Installation).

**No**

REPAIR the short circuit. For additional information, refer to the wiring diagrams.

## PINPOINT TEST F : CLUTCH PEDAL POSITION SENSOR SHORT CIRCUIT TO BATTERY

| TEST CONDITIONS | DETAILS/RESULTS/ACTIONS |
|---|---|

### F1: CHECK THE 5 VOLT SUPPLY CIRCUIT FOR SHORT CIRCUIT TO POWER

1 Key off.

GETtheMANUALS.org

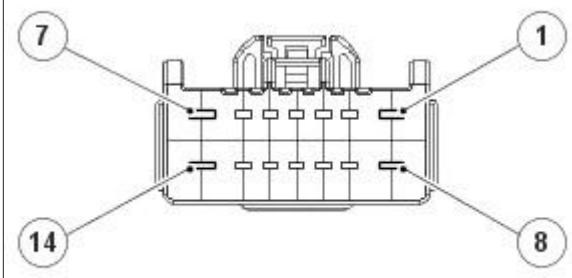

E55103

2 Electric parking brake module connector 1, CA265 disconnected.

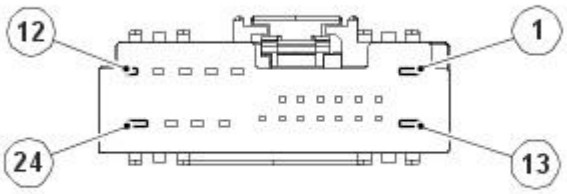

E55104

3 Electric parking brake module connector 2, CA266 disconnected.

4 Key on, engine off.

5 Measure the resistance between:

| CA265, harness side | Vehicle battery |
|---|---|
| Clutch position sensor - supply - Pin 05 | Positive terminal |

Is the resistance greater than 100 Kohms?

**Yes**

GO to F2.

**No**

GO to F4.

**F2: CHECK THE SIGNAL CIRCUIT FOR SHORT CIRCUIT TO POWER**

1 Measure the resistance between:

| CA265, harness side | Vehicle battery |
|---|---|
| Clutch position sensor - signal - Pin 06 | Positive terminal |

Is the resistance greater than 100 Kohms?

**Yes**

GO to F3.

**No**

GO to F5.

**F3: CHECK THE SENSOR RETURN GROUND CIRCUIT FOR SHORT CIRCUIT TO POWER**

1 Measure the resistance between:

| CA266, harness side | Vehicle battery |
|---|---|
| Clutch position sensor - ground - Pin 03 | Positive terminal |

Is the resistance greater than 100 Kohms?

**Yes**

An intermittent fault may be present in the wiring harness. Visually check for chaffed wires or other physical damage to the harness. If no fault is found in the circuit, suspect the following component(s):- EPB module- EPB module connector CA265- EPB module connector CA266

**No**

GO to F6.

**F4: CHECK IF THE SHORT CIRCUIT IS IN THE HARNESS OR THE SENSOR**

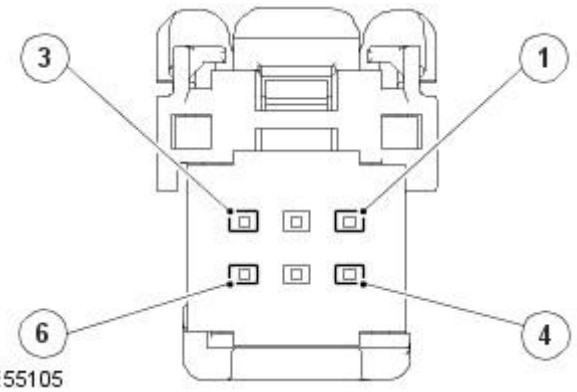

E55105

1 Clutch pedal position sensor (CLPS) connector, CA287 disconnected.

2 Measure the resistance between:

| CA265, harness side | Vehicle battery |
|---|---|
| Clutch position sensor - supply - Pin 05 | Positive terminal |

GETtheMANUALS.org

Is the resistance greater than 100 Kohms?

**Yes**

INSTALL a new CLPS.

**No**

GO to F7.

**F5: CHECK IF THE SHORT CIRCUIT IS IN THE HARNESS OR THE SENSOR**

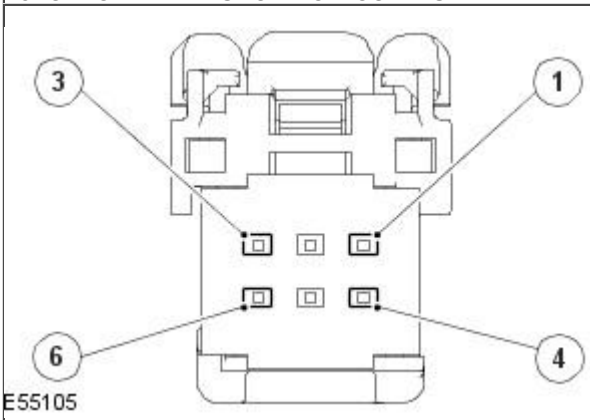


1 Clutch pedal position sensor (CLPS) connector, CA287 disconnected.

2 Measure the resistance between:

| CA265, harness side | Vehicle battery |
|---|---|
| Clutch position sensor - signal - Pin 06 | Positive terminal |

Is the resistance greater than 100 Kohms?

**Yes**

INSTALL a new CLPS.

**No**

REPAIR the short circuit. For additional information, refer to the wiring diagrams.

**F6: CHECK IF THE SHORT CIRCUIT IS IN THE HARNESS OR THE SENSOR**

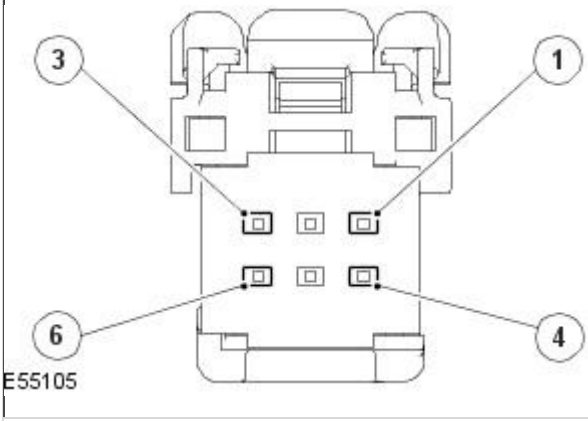


1 Clutch pedal position sensor (CLPS) connector, CA287 disconnected.

2 Measure the resistance between:

| CA266, harness side | Vehicle battery |
|---|---|
| Clutch position sensor - ground - Pin 03 | Positive terminal |

Is the resistance greater than 100 Kohms?

**Yes**

INSTALL a new CLPS.

**No**

REPAIR the short circuit. For additional information, refer to the wiring diagrams.

**F7: CHECK IF THE SHORT CIRCUIT IS IN THE HARNESS OR THE SWITCH**

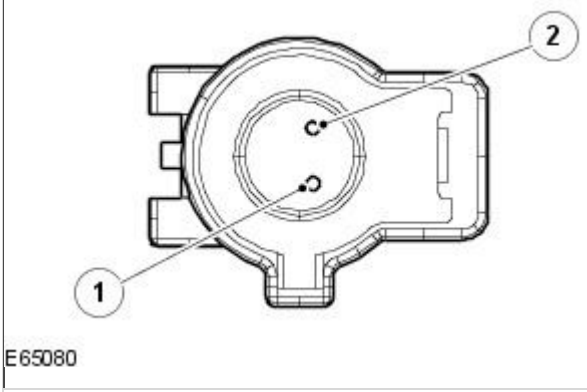


1 In-Gear (IG) switch connector, GB04 disconnected (vehicles with diesel engine).

2 Measure the resistance between:

| CA266, harness side | Vehicle battery |
|---|---|
| Clutch position sensor - supply - Pin 05 | Positive terminal |

Is the resistance greater than 100 Kohms?

**Yes**

INSTALL a new in-gear switch.

**No**

REPAIR the short circuit. For additional information, refer to the wiring diagrams.

GETtheMANUALS.org

## PINPOINT TEST G : SECONDARY APPLY HARNESS SHORT CIRCUIT TO BATTERY OR OPEN CIRCUIT

| TEST CONDITIONS | DETAILS/RESULTS/ACTIONS |
|---|---|
| **G1: CHECK THE PRIMARY APPLY SIGNAL CIRCUIT FOR SHORT CIRCUIT TO POWER** | |
| | 1 Key off. |
| 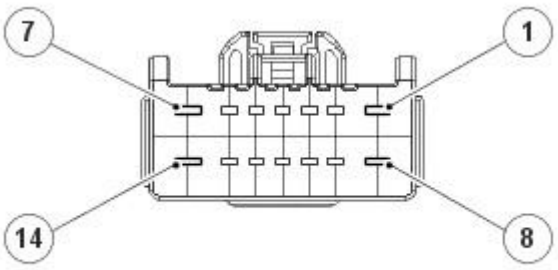 <br>E55103 | 2 Electric parking brake module connector 1, CA265 disconnected. |
| 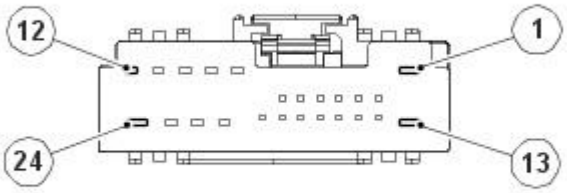 <br>E55104 | 3 Electric parking brake module connector 2, CA266 disconnected. |
| | 4 Key on, engine off.<br>5 Measure the resistance between:<br>**CA265, harness side** — **Vehicle battery**<br>Electric parking brake switch apply 1 - signal - Pin 10 — Positive terminal |
| | Is the resistance greater than 100 Kohms?<br>**Yes**<br>GO to G2.<br>**No**<br>GO to G8. |
| **G2: CHECK THE PRIMARY RELEASE SIGNAL CIRCUIT FOR SHORT CIRCUIT TO POWER** | |
| | 1 Measure the resistance between:<br>**CA265, harness side** — **Vehicle battery**<br>Electric parking brake switch release 1 - signal - Pin 11 — Positive terminal |
| | Is the resistance greater than 100 Kohms?<br>**Yes**<br>GO to G3.<br>**No**<br>GO to G9. |
| **G3: CHECK THE SECONDARY APPLY SIGNAL CIRCUIT FOR SHORT CIRCUIT TO POWER** | |
| | 1 Measure the resistance between:<br>**CA266, harness side** — **Vehicle battery**<br>Electric parking brake switch apply 2 - signal - Pin 02 — Positive terminal |
| | Is the resistance greater than 100 Kohms?<br>**Yes**<br>GO to G4.<br>**No**<br>GO to G10. |
| **G4: CHECK THE SECONDARY RELEASE SIGNAL CIRCUIT FOR SHORT CIRCUIT TO POWER** | |
| | 1 Measure the resistance between:<br>**CA266, harness side** — **Vehicle battery**<br>Electric parking brake switch release 2 - signal - Pin 14 — Positive terminal |
| | Is the resistance greater than 100 Kohms?<br>**Yes**<br>GO to G5.<br>**No**<br>GO to G11. |
| **G5: CHECK THE SECONDARY APPLY SIGNAL CIRCUIT FOR OPEN CIRCUIT** | |

GETtheMANUALS.org

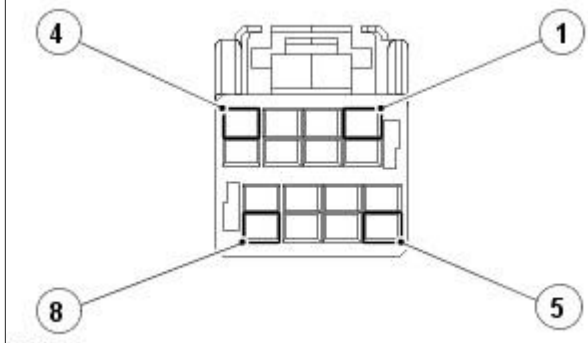

E55102

1 Electric parking brake switch, CA243 connector disconnected.

2 Measure the resistance between:

| CA266, harness side | CA243, harness side |
|---|---|
| Electric parking brake switch apply 2 - signal - Pin 02 | Electric parking brake switch apply 2 - signal - Pin 07 |

Is the resistance less than 10 ohms?

**Yes**

GO to G6.

**No**

REPAIR the open circuit. For additional information, refer to the wiring diagrams.

**G6: CHECK THE SWITCH RETURN SIGNAL CIRCUIT FOR OPEN CIRCUIT**

1 Measure the resistance between:

| CA266, harness side | CA243, harness side |
|---|---|
| Electric parking brake switch - switch return - Pin 06 | Electric parking brake switch - switch return - Pin 06 |

Is the resistance less than 10 ohms?

**Yes**

GO to G7.

**No**

REPAIR the open circuit. For additional information, refer to the wiring diagrams.

**G7: CHECK THE ELECTRIC PARKING BRAKE SWITCH**

1 Measure the resistance between:

| CA243, component side | CA243, component side |
|---|---|
| Electric parking brake switch apply 2 - signal - Pin 07 | Electric parking brake switch - switch return - Pin 06 |

Is the resistance between 595 ohms - 611 ohms?

**Yes**

An intermittent fault may be present in the wiring harness. Visually check for chaffed wires or other physical damage to the harness. If no fault is found in the circuit, suspect the following component(s):- EPB module- EPB module connector CA265- EPB module connector CA266

**No**

INSTALL a new EPB switch.
REFER to: Parking Brake Switch (206-05 Parking Brake and Actuation, Removal and Installation).

**G8: CHECK IF THE SHORT CIRCUIT IS IN THE HARNESS OR THE SWITCH**

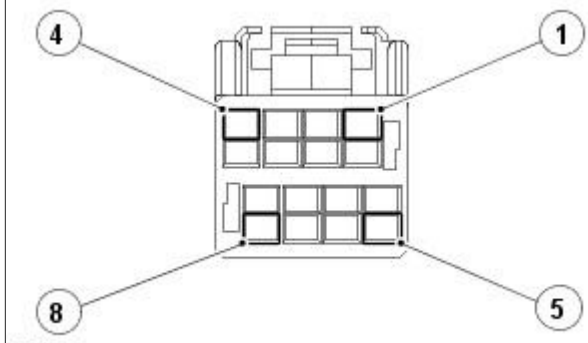

E55102

1 Electric parking brake switch, CA243 connector disconnected.

2 Measure the resistance between:

| CA265, harness side | Vehicle battery |
|---|---|
| Electric parking brake switch apply 1 - signal - Pin 10 | Positive terminal |

Is the resistance greater than 100 Kohms?

**Yes**

INSTALL a new EPB switch.
REFER to: Parking Brake Switch (206-05 Parking Brake and Actuation, Removal and Installation).

**No**

REPAIR the short circuit. For additional information, refer to the wiring diagrams.

**G9: CHECK IF THE SHORT CIRCUIT IS IN THE HARNESS OR THE SWITCH**

GETtheMANUALS.org

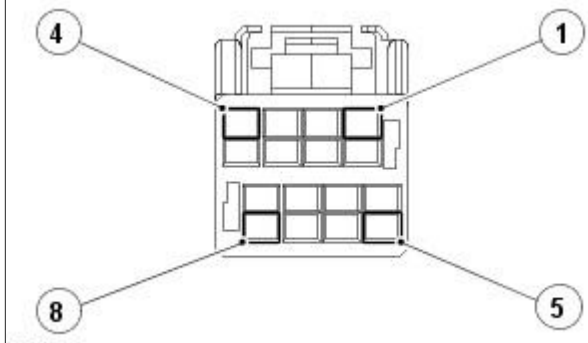

E55102

1 Electric parking brake switch, CA243 connector disconnected.

2 Measure the resistance between:

| CA265, harness side | Vehicle battery |
|---|---|
| Electric parking brake switch release 1 - signal - Pin 11 | Positive terminal |

Is the resistance greater than 100 Kohms?

**Yes**

INSTALL a new EPB switch.
REFER to: Parking Brake Switch (206-05 Parking Brake and Actuation, Removal and Installation).

**No**

REPAIR the short circuit. For additional information, refer to the wiring diagrams.

**G10: CHECK IF THE SHORT CIRCUIT IS IN THE HARNESS OR THE SWITCH**

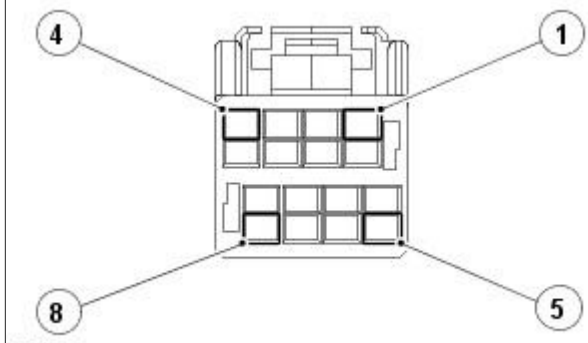

E55102

1 Electric parking brake switch, CA243 connector disconnected.

2 Measure the resistance between:

| CA266, harness side | Vehicle battery |
|---|---|
| Electric parking brake switch apply 2 - signal - Pin 02 | Positive terminal |

Is the resistance greater than 100 Kohms?

**Yes**

INSTALL a new EPB switch.
REFER to: Parking Brake Switch (206-05 Parking Brake and Actuation, Removal and Installation).

**No**

REPAIR the short circuit. For additional information, refer to the wiring diagrams.

**G11: CHECK IF THE SHORT CIRCUIT IS IN THE HARNESS OR THE SWITCH**

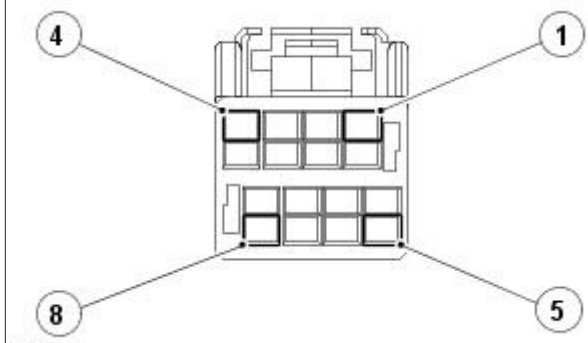

E55102

1 Electric parking brake switch, CA243 connector disconnected.

2 Measure the resistance between:

| CA266, harness side | Vehicle battery |
|---|---|
| Electric parking brake switch release 2 - signal - Pin 14 | Positive terminal |

Is the resistance greater than 100 Kohms?

**Yes**

INSTALL a new EPB switch.
REFER to: Parking Brake Switch (206-05 Parking Brake and Actuation, Removal and Installation).

**No**

REPAIR the short circuit. For additional information, refer to the wiring diagrams.

GETtheMANUALS.org

## PINPOINT TEST H : PRIMARY RELEASE SWITCH CIRCUIT OUT OF RANGE

| TEST CONDITIONS | DETAILS/RESULTS/ACTIONS |
|---|---|
| **H1: CHECK THE PRIMARY RELEASE SWITCH CIRCUIT RESISTANCE** | |
| | 1 Key off. |
| 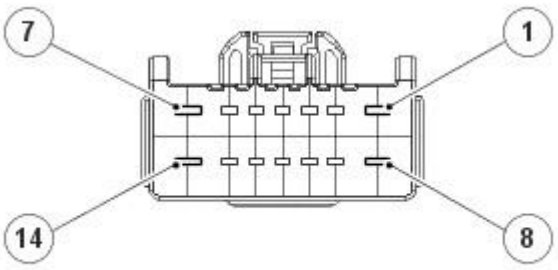 <br>E55103 | 2 Electric parking brake module connector 1, CA265 disconnected. |
| 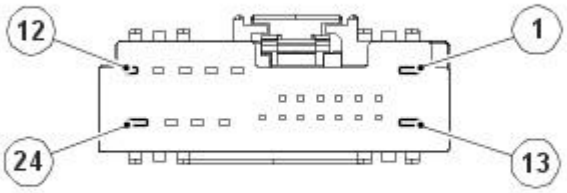 <br>E55104 | 3 Electric parking brake module connector 2, CA266 disconnected. |
| | 4 Key on, engine off. |
| | 5 Measure the resistance between:<br>**CA265, harness side**: Electric parking brake switch release 1 - signal - Pin 11<br>**CA266, harness side**: Electric parking brake switch - switch return - Pin 06 |
| | Is the resistance between 595 ohms - 611 ohms?<br>**Yes**<br>An intermittent fault may be present in the wiring harness. Visually check for chaffed wires or other physical damage to the harness. If no fault is found in the circuit, suspect the following component(s):- EPB module- EPB module connector CA265<br>**No**<br>INSTALL a new EPB switch.<br>REFER to: Parking Brake Switch (206-05 Parking Brake and Actuation, Removal and Installation). |

## PINPOINT TEST I : PRIMARY APPLY SWITCH CIRCUIT OUT OF RANGE

| TEST CONDITIONS | DETAILS/RESULTS/ACTIONS |
|---|---|
| **I1: CHECK THE PRIMARY APPLY SWITCH CIRCUIT RESISTANCE** | |
| | 1 Key off. |
| 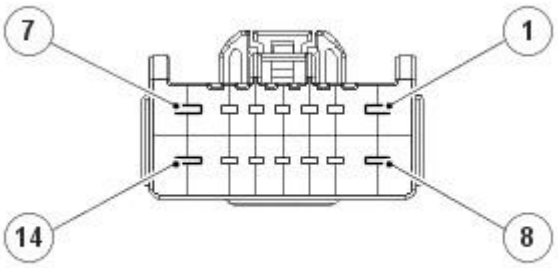 <br>E55103 | 2 Electric parking brake module connector 1, CA265 disconnected. |

GETtheMANUALS.org

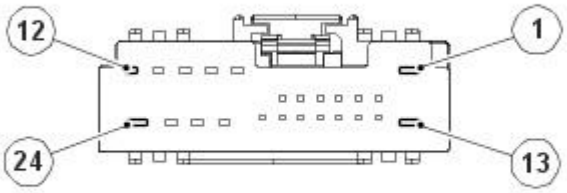

E55104

3 Electric parking brake module connector 2, CA266 disconnected.

4 Key on, engine off.

5 Measure the resistance between:

| CA265, harness side | CA266, harness side |
|---|---|
| Electric parking brake switch apply 1 - signal - Pin 10 | Electric parking brake switch - switch return - Pin 06 |

Is the resistance between 595 ohms - 611 ohms?

**Yes**

An intermittent fault may be present in the wiring harness. Visually check for chaffed wires or other physical damage to the harness. If no fault is found in the circuit, suspect the following component(s):- EPB module- EPB module connector CA265

**No**

INSTALL a new EPB switch.
REFER to: Parking Brake Switch (206-05 Parking Brake and Actuation, Removal and Installation).

## PINPOINT TEST J : PRIMARY APPLY SWITCH CIRCUIT SHORT CIRCUIT TO GROUND

| TEST CONDITIONS | DETAILS/RESULTS/ACTIONS |
|---|---|

### J1: CHECK THE PRIMARY APPLY SIGNAL CIRCUIT FOR SHORT CIRCUIT TO GROUND

1 Key off.

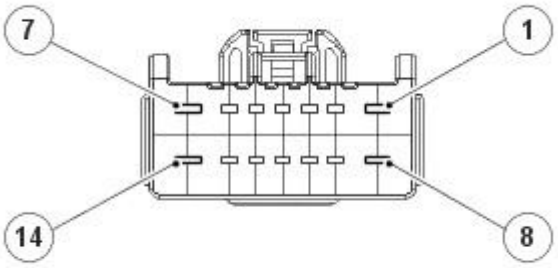

E55103

2 Electric parking brake module connector 1, CA265 disconnected.

3 Key on, engine off.

4 Measure the resistance between:

| CA265, harness side | Vehicle battery |
|---|---|
| Electric parking brake switch apply 1 - signal - Pin 10 | Negative terminal |

Is the resistance greater than 100 Kohms?

**Yes**

An intermittent fault may be present in the wiring harness. Visually check for chaffed wires or other physical damage to the harness. If no fault is found in the circuit, suspect the following component(s):- EPB module- EPB module connector CA265

**No**

GO to J2.

### J2: CHECK IF THE SHORT CIRCUIT IS IN THE HARNESS OR THE SWITCH

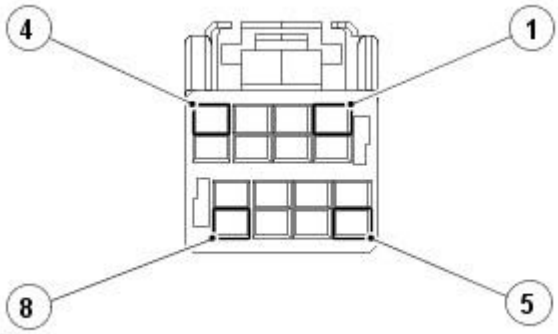

E55102

1 Electric parking brake switch connector, CA243 disconnected.

GETtheMANUALS.org

| | |
|---|---|
| | 2 Measure the resistance between: |

| CA265, harness side | Vehicle battery |
|---|---|
| Electric parking brake switch apply 1 - signal - Pin 10 | Negative terminal |

| | |
|---|---|
| | Is the resistance greater than 100 Kohms?<br>**Yes**<br>INSTALL a new EPB switch.<br>REFER to: Parking Brake Switch (206-05 Parking Brake and Actuation, Removal and Installation).<br>**No**<br>REPAIR the short circuit. For additional information, refer to the wiring diagrams. |

## PINPOINT TEST K : HIGH POWER BATTERY FEED CIRCUIT SHORT CIRCUIT TO GROUND OR OPEN CIRCUIT

| TEST CONDITIONS | DETAILS/RESULTS/ACTIONS |
|---|---|
| **K1: CHECK THE HIGH POWER SUPPLY CIRCUIT** | |
| 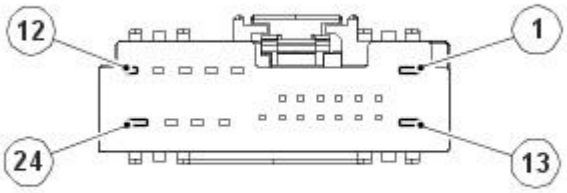 <br>E55104 | 1 Electric parking brake module connector 2, CA266 disconnected. |
| | 2 Measure the voltage between: |

| CA266, harness side | Vehicle battery |
|---|---|
| Electric parking brake module - battery supply - Pin 01 | Negative terminal |

| | |
|---|---|
| | Is the voltage between 9 volts - 15 volts?<br>**Yes**<br>An intermittent fault may be present in the wiring harness. Visually check for chaffed wires or other physical damage to the harness. If no fault is found in the circuit, suspect the following component(s):- EPB module<br>**No**<br>No supply to the EPB circuit. check and repair the circuit as necessary. For additional information, refer to the wiring diagrams. |

## PINPOINT TEST L : PRIMARY RELEASE SWITCH CIRCUIT SHORT CIRCUIT TO GROUND

| TEST CONDITIONS | DETAILS/RESULTS/ACTIONS |
|---|---|
| **L1: CHECK THE PRIMARY RELEASE SIGNAL CIRCUIT FOR SHORT CIRCUIT TO GROUND** | |
| | 1 Key off. |
| 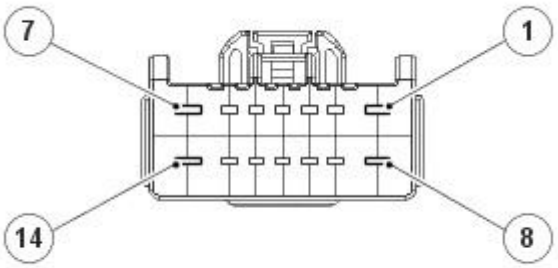 <br>E55103 | 2 Electric parking brake module connector 1, CA265 disconnected. |
| | 3 Key on, engine off. |
| | 4 Measure the resistance between: |

| CA265, harness side | Vehicle battery |
|---|---|
| Electric parking brake switch release 1 - signal - Pin 11 | Negative terminal |

| | |
|---|---|
| | Is the resistance greater than 100 Kohms?<br>**Yes**<br>An intermittent fault may be present in the wiring harness. Visually check for chaffed wires or other physical damage to the harness. If no fault is found in the circuit, suspect the following component(s):- EPB module- EPB module connector CA265<br>**No**<br>GO to L2. |
| **L2: CHECK IF THE SHORT CIRCUIT IS IN THE HARNESS OR THE SWITCH** | |

GETtheMANUALS.org

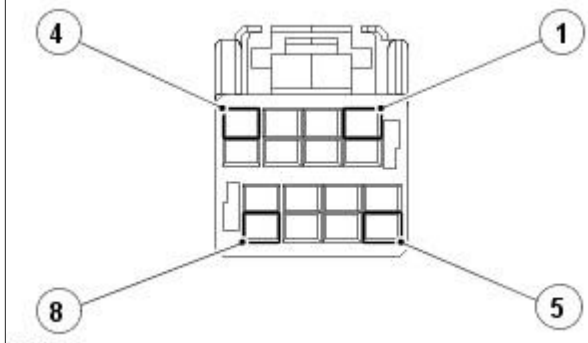

E55102

1 Electric parking brake switch connector, CA243 disconnected.

2 Measure the resistance between:

| CA265, harness side | Vehicle battery |
|---|---|
| Electric parking brake switch release 1 - signal - Pin 11 | Negative terminal |

Is the resistance greater than 100 Kohms?

**Yes**

INSTALL a new EPB switch.
REFER to: Parking Brake Switch (206-05 Parking Brake and Actuation, Removal and Installation).

**No**

REPAIR the short circuit. For additional information, refer to the wiring diagrams.

## PINPOINT TEST M : ACTUATOR OUTPUT SHORT CIRCUIT TO GROUND

| TEST CONDITIONS | DETAILS/RESULTS/ACTIONS |
|---|---|

### M1: CHECK THE ACTUATOR NEGATIVE SIGNAL CIRCUIT FOR SHORT CIRCUIT TO GROUND

1 Key off.

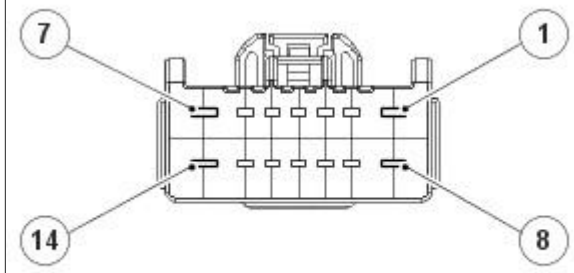

E55103

2 Electric parking brake switch connector, CA243 disconnected.

3 Key on, engine off.

4 Measure the resistance between:

| CA265, harness side | Vehicle battery |
|---|---|
| Electric parking brake actuator - negative - Pin 07 | Negative terminal |

Is the resistance greater than 100 Kohms?

**Yes**

GO to M2.

**No**

GO to M3.

### M2: CHECK THE ACTUATOR POSITIVE SIGNAL CIRCUIT FOR SHORT CIRCUIT TO GROUND

1 Measure the resistance between:

| CA265, harness side | Vehicle battery |
|---|---|
| Electric parking brake actuator - positive - Pin 14 | Negative terminal |

Is the resistance greater than 100 Kohms?

**Yes**

An intermittent fault may be present in the wiring harness. Visually check for chaffed wires or other physical damage to the harness. If no fault is found in the circuit, suspect the following component(s):- EPB module- EPB module connector CA265

**No**

GO to M4.

### M3: CHECK IF THE SHORT CIRCUIT IS IN THE HARNESS OR THE ACTUATOR

GETtheMANUALS.org

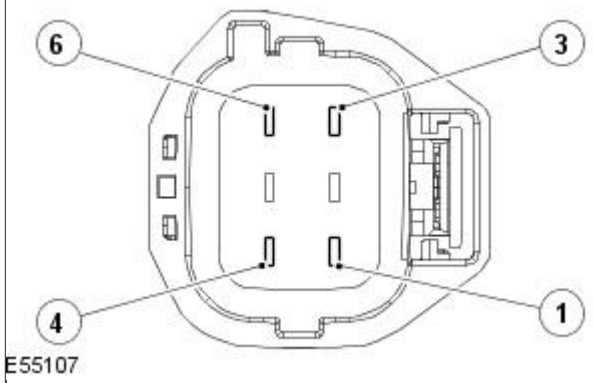


1 EPB actuator connector, CA269 disconnected.

2 Measure the resistance between:

| CA265, harness side | Vehicle battery |
|---|---|
| Electric parking brake actuator - negative - Pin 07 | Negative terminal |

Is the resistance greater than 100 Kohms?

**Yes**

INSTALL a new EPB actuator.
REFER to: Parking Brake Release Actuator (206-05 Parking Brake and Actuation, Removal and Installation).

**No**

REPAIR the short circuit. For additional information, refer to the wiring diagrams.

**M4: CHECK IF THE SHORT CIRCUIT IS IN THE HARNESS OR THE ACTUATOR**

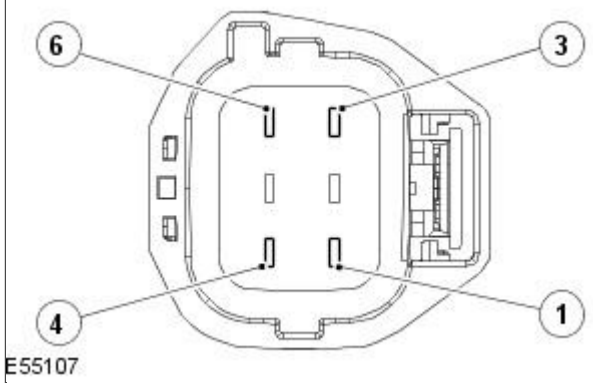


1 EPB actuator connector, CA269 disconnected.

2 Measure the resistance between:

| CA265, harness side | Vehicle battery |
|---|---|
| Electric parking brake actuator - positive - Pin 14 | Negative terminal |

Is the resistance greater than 100 Kohms?

**Yes**

INSTALL a new EPB actuator.
REFER to: Parking Brake Release Actuator (206-05 Parking Brake and Actuation, Removal and Installation).

**No**

REPAIR the short circuit. For additional information, refer to the wiring diagrams.

## PINPOINT TEST N : GEAR SHIFT POSITION FAULT, GENERAL ELECTRICAL FAILURE (VEHICLES WITH PETROL ENGINE ONLY)

| TEST CONDITIONS | DETAILS/RESULTS/ACTIONS |
|---|---|

**N1: CHECK THE SIGNAL CIRCUIT FOR SHORT CIRCUIT TO POWER**

1 Key off.

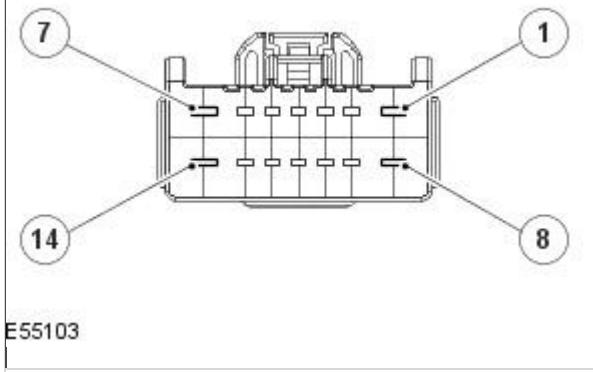


2 Electric parking brake module connector 1 connector, CA265 disconnected.

3 Key on, engine off.

4 Measure the resistance between:

| CA265, harness side | Vehicle battery |
|---|---|
| In-gear switch - signal - Pin 03 | Positive terminal |

GETtheMANUALS.org

Is the resistance greater than 100 Kohms?

**Yes**

GO to N2.

**No**

GO to N3.

**N2: CHECK THE IN-GEAR SWITCH CIRCUIT RESISTANCE**

1. Make sure the vehicle is in NEUTRAL.
2. Key off.
3. Electric parking brake module connector 2 connector, CA266 disconnected.

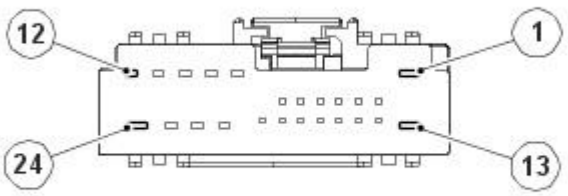


E55104

4. Measure the resistance between:

| CA265, harness side | CA266, harness side |
|---|---|
| In-gear switch - signal - Pin 03 | In-gear switch - return - Pin 15 |

Is the resistance between 580 ohms - 630 ohms?

**Yes**

An intermittent fault may be present in the wiring harness. Visually check for chaffed wires or other physical damage to the harness. If no fault is found in the circuit, suspect the following component(s):- EPB module- EPB module connector CA265- EPB module connector CA266

**No**

GO to N6.

**N3: CHECK IF THE SHORT CIRCUIT IS IN THE HARNESS OR THE SWITCH**

1. In-Gear (IG) switch connector, GB03 disconnected.

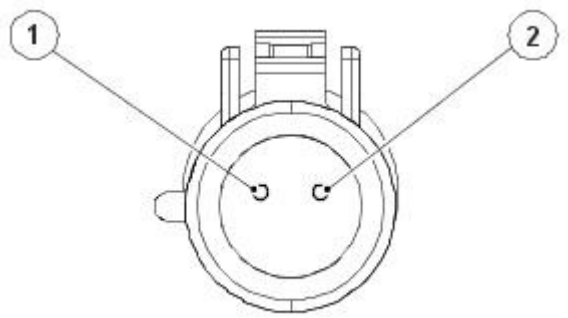


E55106

2. Measure the resistance between:

| CA265, harness side | Vehicle battery |
|---|---|
| In-gear switch - signal - Pin 03 | Positive terminal |

Is the resistance greater than 100 Kohms?

**Yes**

GO to N4.

**No**

REPAIR the short circuit. For additional information, refer to the wiring diagrams.

**N4: CHECK IF THE SHORT CIRCUIT IS IN THE HARNESS OR THE SWITCH**

1. Measure the resistance between:

| GB03, harness side | Vehicle battery |
|---|---|
| In-gear switch - return - Pin 01 | Positive terminal |

Is the resistance greater than 100 Kohms?

**Yes**

INSTALL a new in-gear switch.

**No**

GO to N5.

**N5: CHECK IF THE SHORT CIRCUIT IS IN THE HARNESS OR THE CONTROL MODULE**

1. Key off.

GETtheMANUALS.org

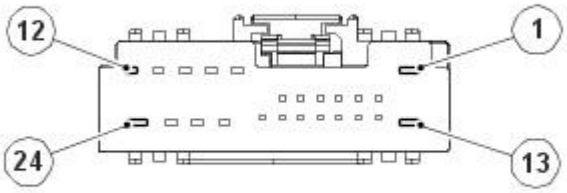

E55104

2 Electric parking brake module connector 2, CA266 disconnected.

3 Key on, engine off.

4 Measure the resistance between:

| GB03, harness side | Vehicle battery |
|---|---|
| In-gear switch - return - Pin 01 | Positive terminal |

Is the resistance greater than 100 Kohms?

**Yes**

INSTALL a new EPB module.
REFER to: Parking Brake Module (206-05 Parking Brake and Actuation, Removal and Installation).

**No**

REPAIR the short circuit. For additional information, refer to the wiring diagrams.

**N6: CHECK THE SIGNAL CIRCUIT FOR OPEN CIRCUIT**

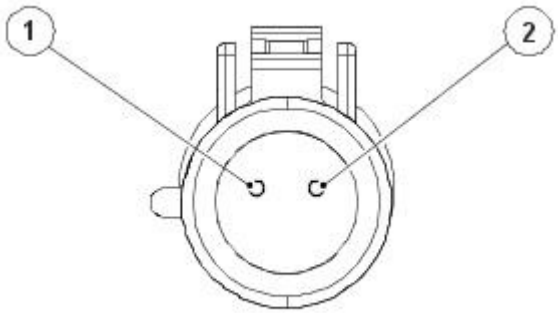

E55106

1 In-gear (IG) switch connector, GB03 disconnected.

2 Measure the resistance between:

| CA265, harness side | GB03, harness side |
|---|---|
| In-gear switch - signal - Pin 03 | In-gear switch - signal - Pin 02 |

Is the resistance less than 10 ohms?

**Yes**

GO to N7.

**No**

REPAIR the open circuit. For additional information, refer to the wiring diagrams.

**N7: CHECK THE SENSOR RETURN CIRCUIT FOR OPEN CIRCUIT**

1 Measure the resistance between:

| CA265, harness side | GB03, harness side |
|---|---|
| In-gear switch - return - Pin 15 | In-gear switch - return - Pin 01 |

Is the resistance less than 10 ohms?

**Yes**

GO to N8.

**No**

REPAIR the open circuit. For additional information, refer to the wiring diagrams.

**N8: CHECK THE IG SWITCH CIRCUIT RESISTANCE**

1 Measure the resistance between:

| IG Switch, component side | IG Switch, component side |
|---|---|
| In-gear switch - return - Pin 01 | In-gear switch - signal - Pin 02 |

Is the resistance between 580 ohms - 630 ohms?

**Yes**

REPAIR the open circuit. For additional information, refer to the wiring diagrams.

**No**

INSTALL a new in-gear switch.

## PINPOINT TEST O : HIGH POWER GROUND FEED OPEN CIRCUIT

| TEST CONDITIONS | DETAILS/RESULTS/ACTIONS |
|---|---|

**O1: CHECK THE MODULE GROUND CIRCUIT FOR CONTINUITY**

GETtheMANUALS.org

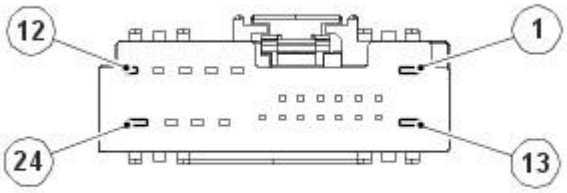

E55104

1 Electric parking brake module connector 2, CA266 disconnected.

2 Measure the resistance between:

| CA266, harness side | Vehicle battery |
|---|---|
| Electric parking brake module - ground - Pin 13 | Negative terminal |

Is the resistance less than 10 ohms?

**Yes**

An intermittent fault may be present in the wiring harness. Visually check for chaffed wires or other physical damage to the harness. If no fault is found in the circuit, suspect the following component(s):EPB Module

**No**

REPAIR the open circuit. For additional information, refer to the wiring diagrams.

## PINPOINT TEST P : ACTUATOR OUTPUT SHORT CIRCUIT TO BATTERY

| TEST CONDITIONS | DETAILS/RESULTS/ACTIONS |
|---|---|

### P1: CHECK THE ACTUATOR NEGATIVE SIGNAL CIRCUIT FOR SHORT CIRCUIT TO POWER

1 Key off.

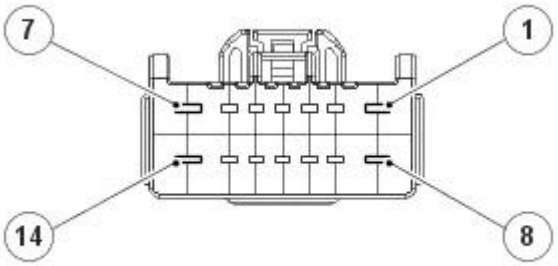

E55103

2 Electric parking brake module connector 1, CA265 disconnected.

3 Key on, engine off.

4 Measure the resistance between:

| CA265, harness side | Vehicle battery |
|---|---|
| Electric parking brake actuator - negative - Pin 07 | Positive terminal |

Is the resistance greater than 100 Kohms?

**Yes**

GO to P2.

**No**

GO to P3.

### P2: CHECK THE ACTUATOR POSITIVE SIGNAL CIRCUIT FOR SHORT CIRCUIT TO POWER

1 Measure the resistance between:

| CA265, harness side | Vehicle battery |
|---|---|
| Electric parking brake actuator - positive - Pin 14 | Positive terminal |

Is the resistance greater than 100 Kohms?

**Yes**

An intermittent fault may be present in the wiring harness. Visually check for chaffed wires or other physical damage to the harness. If no fault is found in the circuit, suspect the following component(s):- EPB module- EPB module connector CA265

**No**

GO to P4.

### P3: CHECK IF THE SHORT CIRCUIT IS IN THE HARNESS OR THE ACTUATOR

GETtheMANUALS.org

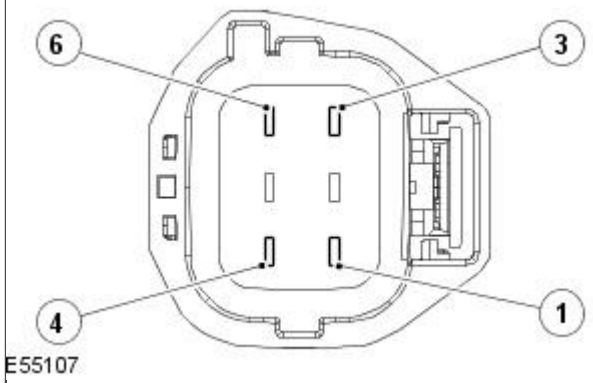


1 EPB actuator connector, CA269 disconnected.

2 Measure the resistance between:

| CA265, harness side | Vehicle battery |
|---|---|
| Electric parking brake actuator - negative - Pin 07 | Positive terminal |

Is the resistance greater than 100 Kohms?

**Yes**

INSTALL a new EPB actuator.
REFER to: Parking Brake Release Actuator (206-05 Parking Brake and Actuation, Removal and Installation).

**No**

REPAIR the short circuit. For additional information, refer to the wiring diagrams.

**P4: CHECK IF THE SHORT CIRCUIT IS IN THE HARNESS OR THE ACTUATOR**

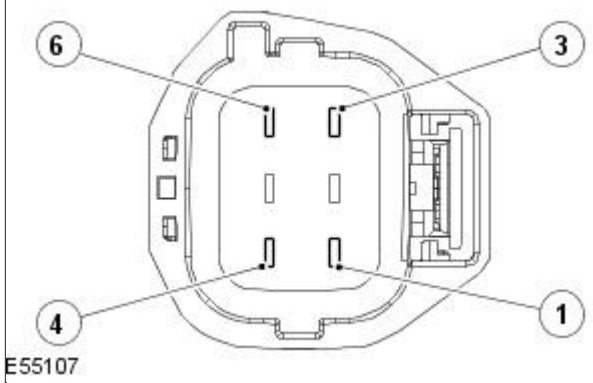


1 EPB actuator connector, CA269 disconnected.

2 Measure the resistance between:

| CA265, harness side | Vehicle battery |
|---|---|
| Electric parking brake actuator - positive - Pin 14 | Positive terminal |

Is the resistance greater than 100 Kohms?

**Yes**

INSTALL a new EPB actuator.
REFER to: Parking Brake Release Actuator (206-05 Parking Brake and Actuation, Removal and Installation).

**No**

REPAIR the short circuit. For additional information, refer to the wiring diagrams.

## PINPOINT TEST Q : ACTUATOR HALL EFFECT SENSOR CIRCUIT FAILURE

| TEST CONDITIONS | DETAILS/RESULTS/ACTIONS |
|---|---|

**Q1: CHECK THE HALL EFFECT 5 VOLT SUPPLY CIRCUIT FOR SHORT CIRCUIT TO GROUND**

1 Key off.

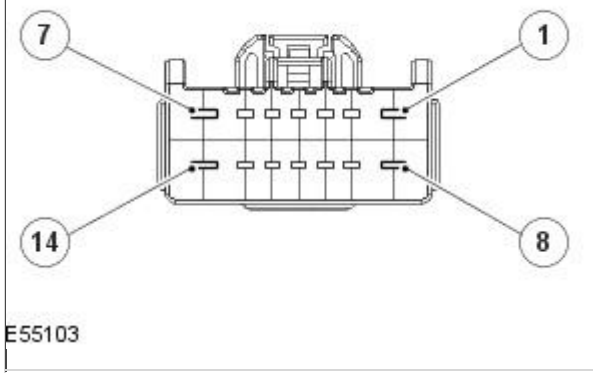


2 Electric parking brake module connector 1, CA265 disconnected.

GETtheMANUALS.org

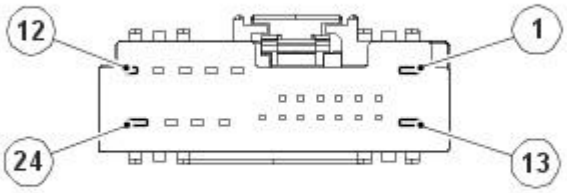

E55104

3 Electric parking brake module connector 2, CA266 disconnected.

4 Key on, engine off.

5 Measure the resistance between:

| CA265, harness side | Vehicle battery |
|---|---|
| Electric parking brake hall effect - signal - Pin 12 | Negative terminal |

Is the resistance greater than 100 Kohms?

**Yes**

GO to Q2.

**No**

GO to Q9.

**Q2: CHECK THE HALL EFFECT 5 VOLT SUPPLY CIRCUIT FOR SHORT CIRCUIT TO POWER**

1 Measure the resistance between:

| CA265, harness side | Vehicle battery |
|---|---|
| Electric parking brake hall effect - signal - Pin 12 | Positive terminal |

Is the resistance greater than 100 Kohms?

**Yes**

GO to Q3.

**No**

GO to Q10.

**Q3: CHECK THE ACTUATOR SIGNAL CIRCUIT FOR SHORT CIRCUIT TO GROUND**

1 Measure the resistance between:

| CA266, harness side | Vehicle battery |
|---|---|
| Electric parking brake actuator - signal - Pin 10 | Negative terminal |

Is the resistance greater than 100 Kohms?

**Yes**

GO to Q4.

**No**

GO to Q11.

**Q4: CHECK THE ACTUATOR SIGNAL CIRCUIT FOR SHORT CIRCUIT TO POWER**

1 Measure the resistance between:

| CA266, harness side | Vehicle battery |
|---|---|
| Electric parking brake actuator - signal - Pin 10 | Negative terminal |

Is the resistance greater than 100 Kohms?

**Yes**

GO to Q5.

**No**

GO to Q12.

**Q5: CHECK THE SENSOR RETURN CIRCUIT FOR SHORT CIRCUIT TO BATTERY**

1 Measure the resistance between:

| CA265, harness side | Vehicle battery |
|---|---|
| Electric parking brake hall effect - ground - Pin 13 | Positive terminal |

Is the resistance greater than 100 Kohms?

**Yes**

GO to Q6.

**No**

GO to Q13.

**Q6: CHECK THE SENSOR RETURN CIRCUIT FOR OPEN CIRCUIT**

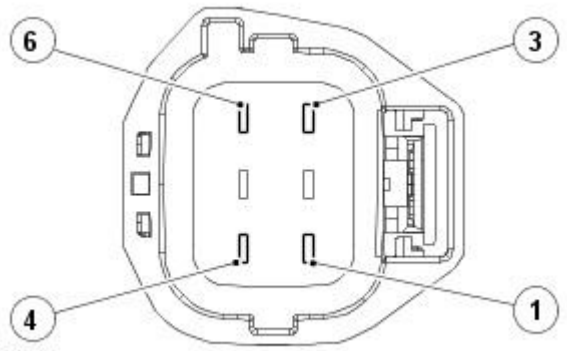

E55107

1 EPB actuator connector, CA269 disconnected.

2 Measure the resistance between:

| CA265, harness side | CA269, harness side |
|---|---|
| Electric parking brake hall effect - ground - Pin 13 | Electric parking brake hall effect - ground - Pin 05 |

GETtheMANUALS.org

Is the resistance less than 10 ohms?

**Yes**

GO to Q7.

**No**

REPAIR the open circuit. For additional information, refer to the wiring diagrams.

**Q7: CHECK THE HALL EFFECT 5 VOLT SUPPLY CIRCUIT FOR OPEN CIRCUIT**

1 Measure the resistance between:

| CA265, harness side | CA269, harness side |
|---|---|
| Electric parking brake hall effect - signal - Pin 12 | Electric parking brake hall effect - signal - Pin 03 |

Is the resistance less than 10 ohms?

**Yes**

GO to Q8.

**No**

REPAIR the open circuit. For additional information, refer to the wiring diagrams.

**Q8: CHECK THE ACTUATOR SIGNAL CIRCUIT FOR OPEN CIRCUIT**

1 Measure the resistance between:

| CA266, harness side | CA269, harness side |
|---|---|
| Electric parking brake actuator - signal - Pin 10 | Electric parking brake actuator - signal - Pin 04 |

Is the resistance less than 10 ohms?

**Yes**

An intermittent fault may be present in the wiring harness. Visually check for chaffed wires or other physical damage to the harness. If no fault is found in the circuit, suspect the following component(s):- EPB module- EPB actuator- EPB module connector CA265- EPB module connector CA266- EPB actuator connector CA269

**No**

REPAIR the open circuit. For additional information, refer to the wiring diagrams.

**Q9: CHECK IF THE SHORT CIRCUIT IS IN THE HARNESS OR THE ACTUATOR**

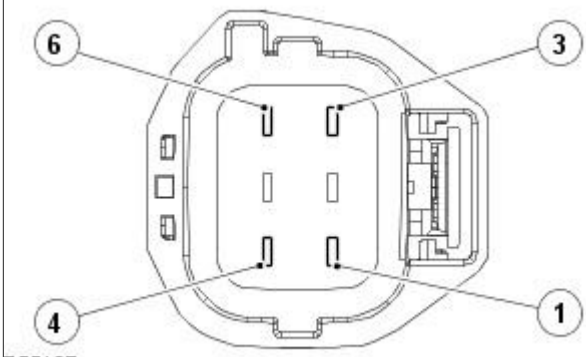

E55107

1 EPB actuator connector, CA269 disconnected.

2 Measure the resistance between:

| CA265, harness side | Vehicle battery |
|---|---|
| Electric parking brake hall effect - signal - Pin 12 | Negative terminal |

Is the resistance greater than 100 Kohms?

**Yes**

INSTALL a new EPB actuator.

REFER to: Parking Brake Release Actuator (206-05 Parking Brake and Actuation, Removal and Installation).

**No**

REPAIR the short circuit. For additional information, refer to the wiring diagrams.

**Q10: CHECK IF THE SHORT CIRCUIT IS IN THE HARNESS OR THE ACTUATOR**

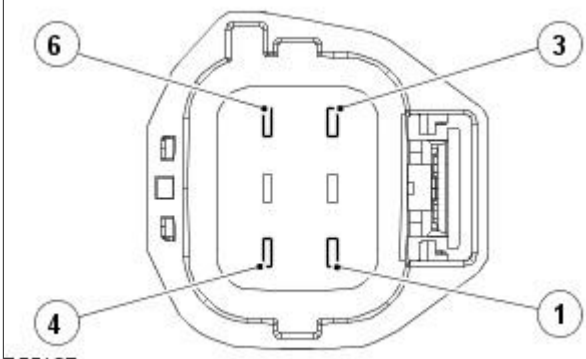

E55107

1 EPB actuator connector, CA269 disconnected.

2 Measure the resistance between:

| CA265, harness side | Vehicle battery |
|---|---|
| Electric parking brake hall effect - signal - Pin 12 | Positive terminal |

Is the resistance greater than 100 Kohms?

**Yes**

INSTALL a new EPB actuator.

REFER to: Parking Brake Release Actuator (206-05 Parking Brake and Actuation, Removal and Installation).

GETtoMANUALS.org

**No**

REPAIR the short circuit. For additional information, refer to the wiring diagrams.

**Q11: CHECK IF THE SHORT CIRCUIT IS IN THE HARNESS OR THE ACTUATOR**

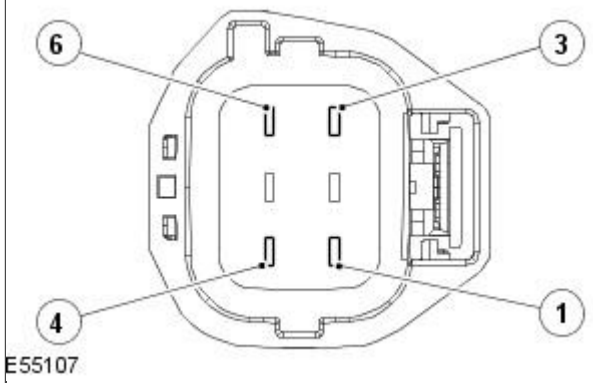


1 EPB actuator connector, CA269 disconnected.

2 Measure the resistance between:

| CA266, harness side | Vehicle battery |
|---|---|
| Electric parking brake actuator - signal - Pin 10 | Negative terminal |

Is the resistance greater than 100 Kohms?

**Yes**

INSTALL a new EPB actuator.
REFER to: Parking Brake Release Actuator (206-05 Parking Brake and Actuation, Removal and Installation).

**No**

REPAIR the short circuit. For additional information, refer to the wiring diagrams.

**Q12: CHECK IF THE SHORT CIRCUIT IS IN THE HARNESS OR THE ACTUATOR**

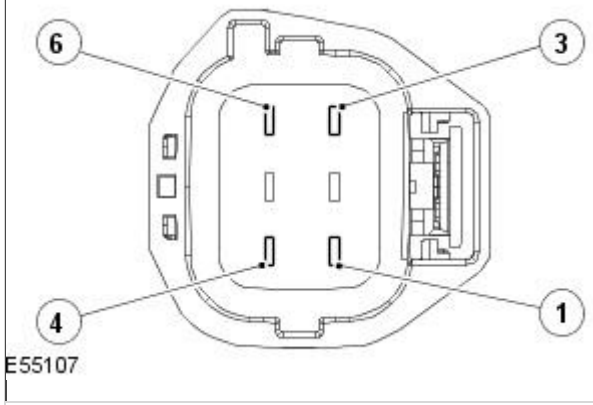


1 EPB actuator connector, CA269 disconnected.

2 Measure the resistance between:

| CA266, harness side | Vehicle battery |
|---|---|
| Electric parking brake actuator - signal - Pin 10 | Positive terminal |

Is the resistance greater than 100 Kohms?

**Yes**

INSTALL a new EPB actuator.
REFER to: Parking Brake Release Actuator (206-05 Parking Brake and Actuation, Removal and Installation).

**No**

REPAIR the short circuit. For additional information, refer to the wiring diagrams.

**Q13: CHECK IF THE SHORT CIRCUIT IS IN THE HARNESS OR THE ACTUATOR**

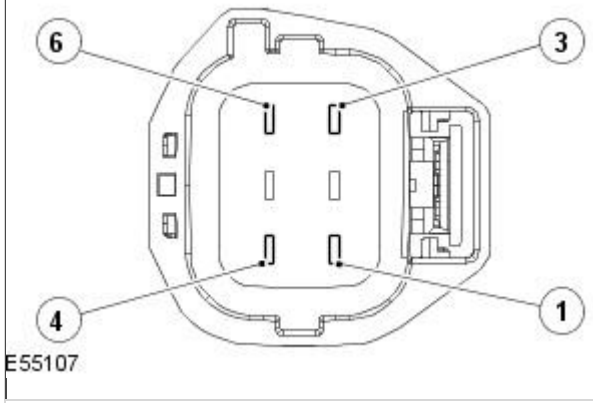


1 EPB actuator connector, CA269 disconnected.

2 Measure the resistance between:

| CA265, harness side | Vehicle battery |
|---|---|
| Electric parking brake hall effect - ground - Pin 13 | Positive terminal |

Is the resistance greater than 100 Kohms?

**Yes**

INSTALL a new EPB actuator.
REFER to: Parking Brake Release Actuator (206-05 Parking Brake and Actuation, Removal and Installation).

GETtheMANUALS.com

| | |
|---|---|
| | **No**<br>REPAIR the short circuit. For additional information, refer to the wiring diagrams. |

## PINPOINT TEST R : SECONDARY RELEASE HARNESS SHORT CIRCUIT TO BATTERY OR OPEN CIRCUIT

| TEST CONDITIONS | DETAILS/RESULTS/ACTIONS |
|---|---|
| **R1: CHECK THE PRIMARY APPLY SIGNAL CIRCUIT FOR SHORT CIRCUIT TO POWER** | |
| | 1 Key off. |
| 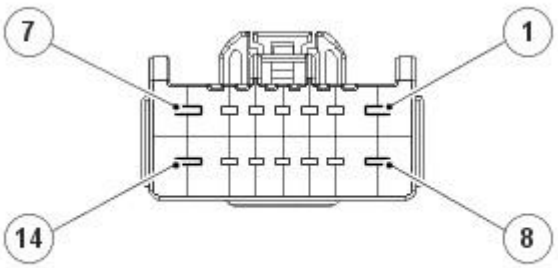 <br>E55103 | 2 Electric parking brake module connector 1, CA265 disconnected. |
| 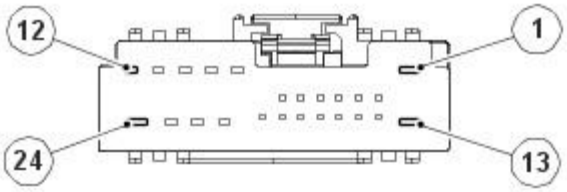 <br>E55104 | 3 Electric parking brake module connector 2, CA266 disconnected. |
| | 4 Key on, engine off.<br>5 Measure the resistance between:<br>**CA265, harness side** — **Vehicle battery**<br>Electric parking brake switch apply 1 - signal - Pin 10 — Positive terminal |
| | Is the resistance greater than 100 Kohms?<br>**Yes**<br>GO to R2.<br>**No**<br>GO to R8. |
| **R2: CHECK THE PRIMARY RELEASE SIGNAL CIRCUIT FOR SHORT CIRCUIT TO POWER** | |
| | 1 Measure the resistance between:<br>**CA265, harness side** — **Vehicle battery**<br>Electric parking brake switch release 1 - signal - Pin 11 — Positive terminal |
| | Is the resistance greater than 100 Kohms?<br>**Yes**<br>GO to R3.<br>**No**<br>GO to R9. |
| **R3: CHECK THE SECONDARY APPLY SIGNAL CIRCUIT FOR SHORT CIRCUIT TO POWER** | |
| | 1 Measure the resistance between:<br>**CA266, harness side** — **Vehicle battery**<br>Electric parking brake switch apply 2 - signal - Pin 02 — Positive terminal |
| | Is the resistance greater than 100 Kohms?<br>**Yes**<br>GO to R4.<br>**No**<br>GO to R10. |
| **R4: CHECK THE SECONDARY RELEASE SIGNAL CIRCUIT FOR SHORT CIRCUIT TO POWER** | |
| | 1 Measure the resistance between:<br>**CA266, harness side** — **Vehicle battery**<br>Electric parking brake switch release 2 - signal - Pin 14 — Positive terminal |
| | Is the resistance greater than 100 Kohms?<br>**Yes**<br>GO to R5.<br>**No**<br>GO to R11. |
| **R5: CHECK THE SECONDARY RELEASE SIGNAL CIRCUIT FOR OPEN CIRCUIT** | |

GETtheMANUALS.org

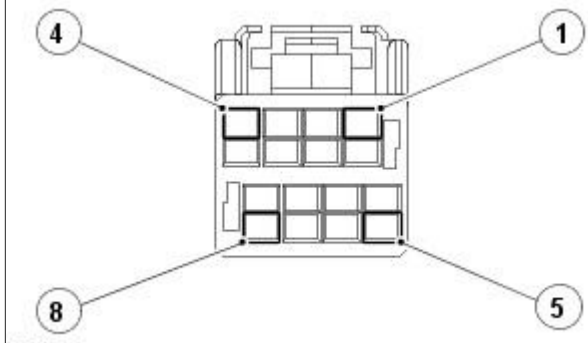

E55102

1 Electric parking brake switch connector, CA243 disconnected.

2 Measure the resistance between:

| CA266, harness side | CA243, harness side |
|---|---|
| Electric parking brake switch release 2 - signal - Pin 14 | Electric parking brake switch release 2 - signal - Pin 05 |

Is the resistance less than 10 ohms?

**Yes**

GO to R6.

**No**

REPAIR the open circuit. For additional information, refer to the wiring diagrams.

**R6: CHECK THE SWITCH RETURN SIGNAL CIRCUIT FOR OPEN CIRCUIT**

1 Measure the resistance between:

| CA266, harness side | CA243, harness side |
|---|---|
| Electric parking brake switch - switch return - Pin 06 | Electric parking brake switch - switch return - Pin 06 |

Is the resistance less than 10 ohms?

**Yes**

GO to R7.

**No**

REPAIR the open circuit. For additional information, refer to the wiring diagrams.

**R7: CHECK THE ELECTRIC PARKING BRAKE SWITCH**

1 Measure the resistance between:

| CA243, component side | CA243, component side |
|---|---|
| Electric parking brake switch release 2 - signal - Pin 05 | Electric parking brake switch - switch return - Pin 06 |

Is the resistance between 595 ohms - 611 ohms?

**Yes**

An intermittent fault may be present in the wiring harness. Visually check for chaffed wires or other physical damage to the harness. If no fault is found in the circuit, suspect the following component(s):- EPB module- EPB module connector CA265- EPB module connector CA266

**No**

INSTALL a new EPB switch.
REFER to: Parking Brake Switch (206-05 Parking Brake and Actuation, Removal and Installation).

**R8: CHECK IF THE SHORT CIRCUIT IS IN THE HARNESS OR THE SWITCH**

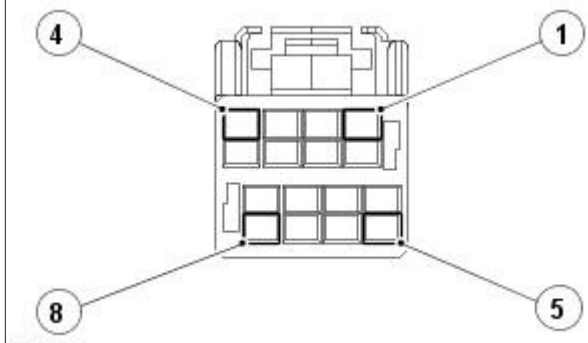

E55102

1 Electric parking brake switch connector, CA243 disconnected.

2 Measure the resistance between:

| CA265, harness side | Vehicle battery |
|---|---|
| Electric parking brake switch apply 1 - signal - Pin 10 | Positive terminal |

Is the resistance greater than 100 Kohms?

**Yes**

INSTALL a new EPB switch.
REFER to: Parking Brake Switch (206-05 Parking Brake and Actuation, Removal and Installation).

**No**

REPAIR the short circuit. For additional information, refer to the wiring diagrams.

**R9: CHECK IF THE SHORT CIRCUIT IS IN THE HARNESS OR THE SWITCH**

GETtheMANUALS.org

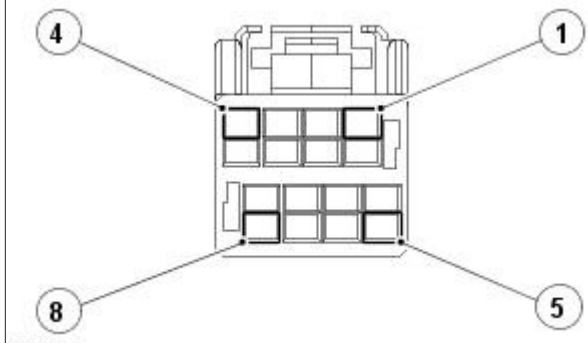

E55102

1 Electric parking brake switch connector, CA243 disconnected.

2 Measure the resistance between:

| CA265, harness side | Vehicle battery |
|---|---|
| Electric parking brake switch release 1 - signal - Pin 11 | Positive terminal |

Is the resistance greater than 100 Kohms?

**Yes**

INSTALL a new EPB switch.
REFER to: Parking Brake Switch (206-05 Parking Brake and Actuation, Removal and Installation).

**No**

REPAIR the short circuit. For additional information, refer to the wiring diagrams.

**R10: CHECK IF THE SHORT CIRCUIT IS IN THE HARNESS OR THE SWITCH**

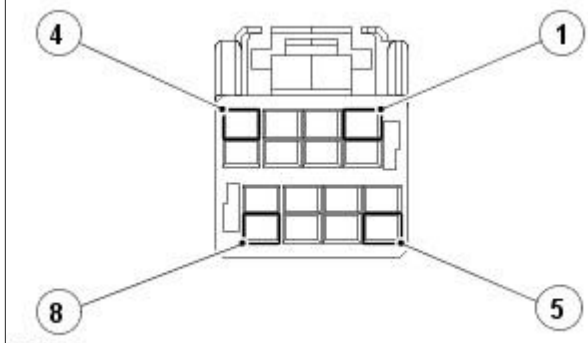

E55102

1 Electric parking brake switch connector, CA243 disconnected.

2 Measure the resistance between:

| CA266, harness side | Vehicle battery |
|---|---|
| Electric parking brake switch apply 2 - signal - Pin 02 | Positive terminal |

Is the resistance greater than 100 Kohms?

**Yes**

INSTALL a new EPB switch.
REFER to: Parking Brake Switch (206-05 Parking Brake and Actuation, Removal and Installation).

**No**

REPAIR the short circuit. For additional information, refer to the wiring diagrams.

**R11: CHECK IF THE SHORT CIRCUIT IS IN THE HARNESS OR THE SWITCH**

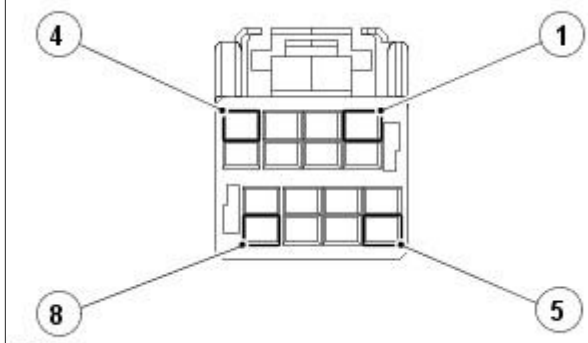

E55102

1 Electric parking brake switch connector, CA243 disconnected.

2 Measure the resistance between:

| CA266, harness side | Vehicle battery |
|---|---|
| Electric parking brake switch release 2 - signal - Pin 14 | Positive terminal |

Is the resistance greater than 100 Kohms?

**Yes**

INSTALL a new EPB switch.
REFER to: Parking Brake Switch (206-05 Parking Brake and Actuation, Removal and Installation).

**No**

REPAIR the short circuit. For additional information, refer to the wiring diagrams.

GETtheMANUALS.org

## PINPOINT TEST S : ACTUATOR DOES NOT FULLY RELEASE

| TEST CONDITIONS | DETAILS/RESULTS/ACTIONS |
|---|---|
| **S1: CHECK THE HIGH CURRENT GROUND CIRCUIT FOR AN OPEN CIRCUIT IN THE HARNESS** | |
| | 1 Key off. |
| 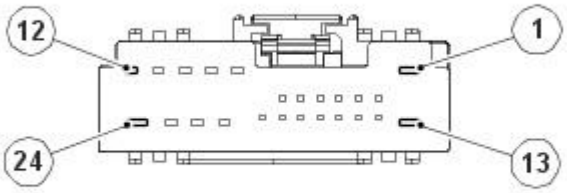 E55104 | 2 Electric parking brake connector 2, CA266 disconnected. |
| | 3 Measure the resistance between:<br>**CA266, harness side**: Electric parking brake module - ground - Pin 13<br>**Vehicle battery**: Negative terminal |
| | Is the resistance less than 10 ohms?<br>**Yes**<br>An intermittent fault may be present in the wiring harness. Visually check for chaffed wires or other physical damage to the harness. If no fault is found in the circuit, suspect the following component(s):- EPB module- EPB module connector CA266<br>**No**<br>REPAIR the open circuit. For additional information, refer to the wiring diagrams. |

## PINPOINT TEST T : SECONDARY RELEASE SWITCH CIRCUIT SHORT CIRCUIT TO GROUND

| TEST CONDITIONS | DETAILS/RESULTS/ACTIONS |
|---|---|
| **T1: CHECK THE SECONDARY RELEASE SIGNAL CIRCUIT FOR SHORT CIRCUIT TO GROUND** | |
| | 1 Key off. |
| 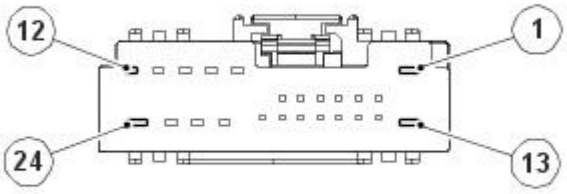 E55104 | 2 Electric parking brake connector 1, CA265 disconnected. |
| | 3 Key on, engine off.<br>4 Measure the resistance between:<br>**CA266, harness side**: Electric parking brake switch release 2 - signal - Pin 14<br>**Vehicle battery**: Negative terminal |
| | Is the resistance greater than 100 Kohms?<br>**Yes**<br>An intermittent fault may be present in the wiring harness. Visually check for chaffed wires or other physical damage to the harness. If no fault is found in the circuit, suspect the following component(s):- EPB module- EPB module connector CA266<br>**No**<br>GO to T2. |
| **T2: CHECK IF THE SHORT CIRCUIT IS IN THE HARNESS OR THE SWITCH** | |
| 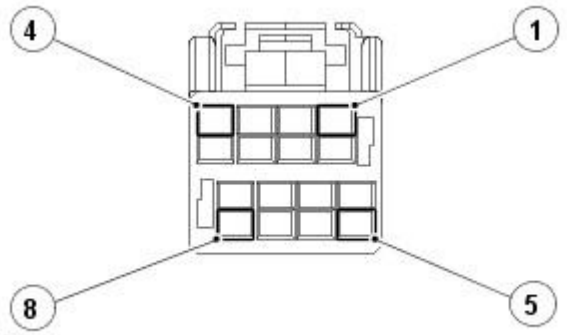 E55102 | 1 Electric parking brake switch connector, CA243 disconnected. |

GETtheMANUALS.org

| | |
|---|---|
| | 2 Measure the resistance between: |

| CA266, harness side | Vehicle battery |
|---|---|
| Electric parking brake switch release 2 - signal - Pin 14 | Negative terminal |

| | |
|---|---|
| | Is the resistance greater than 100 Kohms?<br>**Yes**<br>INSTALL a new EPB switch.<br>REFER to: Parking Brake Switch (206-05 Parking Brake and Actuation, Removal and Installation).<br>**No**<br>REPAIR the short circuit. For additional information, refer to the wiring diagrams. |

## PINPOINT TEST U : APPLY AND RELEASE SWITCH CONTACTS ENERGIZED SIMULTANEOUSLY

| TEST CONDITIONS | DETAILS/RESULTS/ACTIONS |
|---|---|
| **U1: CHECK THE PRIMARY EPB APPLY AND RELEASE CIRCUIT FOR SHORT CIRCUIT FAULTS** | |
| | 1 Key off. |
| 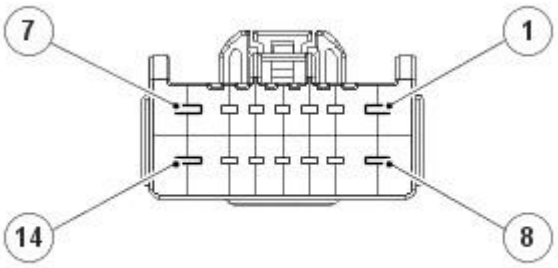 <br>E55103 | 2 Electric parking brake module connector 1, CA265 disconnected. |
| 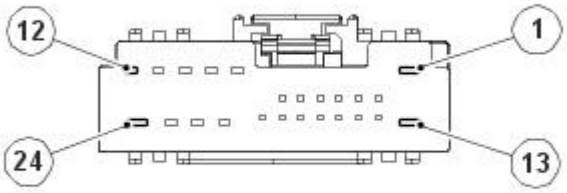 <br>E55104 | 3 Electric parking brake module connector 2, CA266 disconnected. |
| | 4 Make sure the parking brake switch is not in the apply or release position. |
| | 5 Measure the resistance between: |

| CA265, harness side | CA265, harness side |
|---|---|
| Electric parking brake switch apply 1 - signal - Pin 10 | Electric parking brake switch release 1 - signal - Pin 11 |

| | |
|---|---|
| | Is the resistance between 1.19 Kohms - 1.222 Kohms?<br>**Yes**<br>GO to U2.<br>**No**<br>GO to U3. |
| **U2: CHECK THE SECONDARY EPB APPLY AND RELEASE CIRCUIT FOR SHORT CIRCUIT FAULTS** | |
| | 1 Make sure the parking brake switch is not in the apply or release position. |
| | 2 Measure the resistance between: |

| CA266, harness side | CA266, harness side |
|---|---|
| Electric parking brake switch apply 2 - signal - Pin 02 | Electric parking brake switch release 2 - signal - Pin 14 |

| | |
|---|---|
| | Is the resistance between 1.19 Kohms - 1.222 Kohms?<br>**Yes**<br>An intermittent fault may be present in the wiring harness. Visually check for chaffed wires or other physical damage to the harness. If no fault is found in the circuit, suspect the following component(s):- EPB module- EPB module connector CA265- EPB module connector CA266<br>**No**<br>GO to U4. |
| **U3: CHECK IF THE SHORT CIRCUIT IS IN THE HARNESS OR THE SWITCH** | |

GETtheMANUALS.org

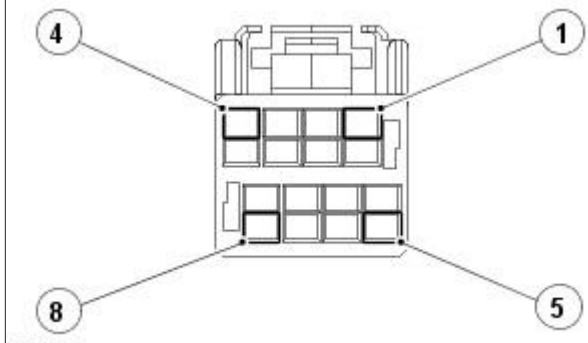

E55102

1 Electric parking brake switch, CA243 connector disconnected.

2 Measure the resistance between:

| CA265, harness side | CA265, harness side |
|---|---|
| Electric parking brake switch apply 1 - signal - Pin 10 | Electric parking brake switch release 1 - signal - Pin 11 |

Is the resistance greater than 100 Kohms?

**Yes**

INSTALL a new EPB switch.
REFER to: Parking Brake Switch (206-05 Parking Brake and Actuation, Removal and Installation).

**No**

REPAIR the short circuit. For additional information, refer to the wiring diagrams.

**U4: CHECK IF THE SHORT CIRCUIT IS IN THE HARNESS OR THE SWITCH**

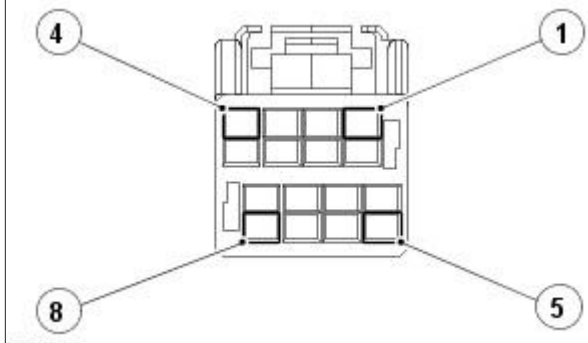

E55102

1 Electric parking brake switch connector, CA243 disconnected.

2 Measure the resistance between:

| CA266, harness side | CA266, harness side |
|---|---|
| Electric parking brake switch apply 2 - signal - Pin 02 | Electric parking brake switch release 2 - signal - Pin 14 |

Is the resistance greater than 100 Kohms?

**Yes**

INSTALL a new EPB switch.
REFER to: Parking Brake Switch (206-05 Parking Brake and Actuation, Removal and Installation).

**No**

REPAIR the short circuit. For additional information, refer to the wiring diagrams.

## PINPOINT TEST V : BRAKE SWITCH INPUT STATUS PLAUSIBILITY FAILURE

| TEST CONDITIONS | DETAILS/RESULTS/ACTIONS |
|---|---|

**V1: CHECK THE BRAKE SWITCH CIRCUIT FOR SHORT CIRCUIT TO POWER IN HARNESS**

1 Key off.

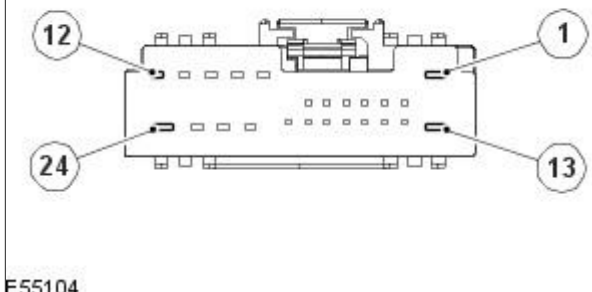

E55104

2 Electric parking brake module connector 2, CA266 disconnected.

3 Key on, engine off.

4 Make sure the brake pedal is not pressed.

5 Measure the resistance between:

| CA266, harness side | Vehicle battery |
|---|---|
| Brake switch - signal - Pin 07 | Positive terminal |

GETtheMANUAL.org

Is the resistance greater than 100 Kohms?

**Yes**

GO to V2.

**No**

GO to V3.

**V2: CHECK THE BRAKE SWITCH CIRCUIT FOR SHORT CIRCUIT TO GROUND IN THE HARNESS**

1 Measure the resistance between:

| CA266, harness side | Vehicle battery |
|---|---|
| Brake switch - signal - Pin 07 | Negative terminal |

Is the resistance greater than 100 Kohms?

**Yes**

The following items have not been fully tested :- EPB module- Brake switch- ECM

**No**

REPAIR the short circuit. For additional information, refer to the wiring diagrams.

**V3: CHECK THE BRAKE SWITCH CIRCUIT FOR SHORT CIRCUIT TO POWER IN THE HARNESS**

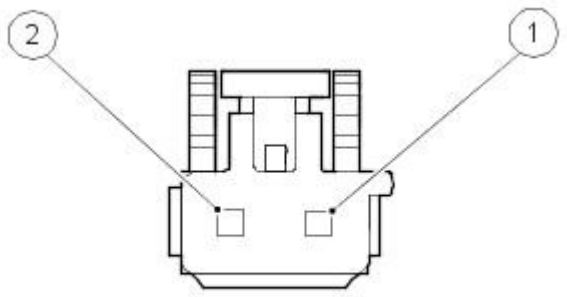


E55108

1 Brake switch connector, CR78 disconnected.

2 Measure the resistance between:

| CA266, harness side | Vehicle battery |
|---|---|
| Brake switch - signal - Pin 07 | Positive terminal |

Is the resistance greater than 100 Kohms?

**Yes**

INSTALL a new brake switch.

**No**

REPAIR the short circuit. For additional information, refer to the wiring diagrams.

**PINPOINT TEST W : GEARSHIFT POSITION SHORT CIRCUIT TO GROUND (VEHICLES WITH PETROL ENGINE ONLY)**

| TEST CONDITIONS | DETAILS/RESULTS/ACTIONS |
|---|---|

**W1: CHECK THE SIGNAL CIRCUIT FOR SHORT CIRCUIT TO GROUND**

1 Key off.

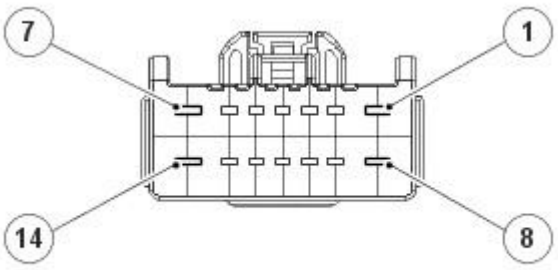


E55103

2 Electric parking brake module connector 1, CA265 disconnected.

3 Key on, engine off.

4 Measure the resistance between:

| CA265, harness side | Vehicle battery |
|---|---|
| In-gear switch - signal - Pin 03 | Negative terminal |

Is the resistance greater than 100 Kohms?

**Yes**

An intermittent fault may be present in the wiring harness. Visually check for chaffed wires or other physical damage to the harness. If no fault is found in the circuit, suspect the following component(s):- EPB module- EPB module connector CA265

**No**

GO to W2.

**W2: CHECK IF THE SHORT CIRCUIT IS IN THE HARNESS OR THE IG SWITCH**

GETtheMANUALS.org

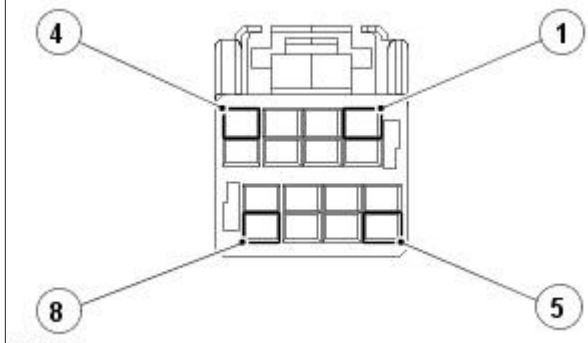

E55102

1 In-Gear (IG) switch connector, GB03 disconnected.

2 Measure the resistance between:

| CA265, harness side | Vehicle battery |
|---|---|
| In-gear switch - signal - Pin 03 | Negative terminal |

Is the resistance greater than 100 Kohms?

**Yes**

INSTALL a new in-gear switch.

**No**

REPAIR the short circuit. For additional information, refer to the wiring diagrams.

## PINPOINT TEST X : ACTUATOR OUTPUT OPEN CIRCUIT

| TEST CONDITIONS | DETAILS/RESULTS/ACTIONS |
|---|---|

### X1: CHECK THE ACTUATOR CIRCUIT RESISTANCE

1 Key off.

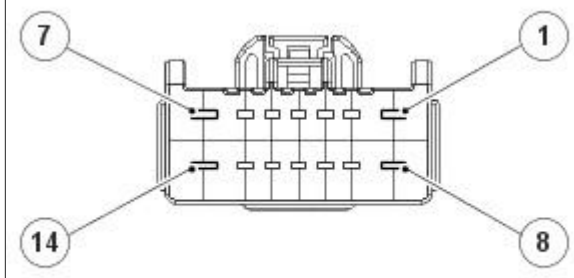

E55103

2 Electric parking brake module connector 1, CA265 disconnected.

3 Key on, engine off.

4 Measure the resistance between:

| CA265, harness side | CA265, harness side |
|---|---|
| Electric parking brake actuator - positive - Pin 14 | Electric parking brake actuator - negative - Pin 07 |

Is the resistance between 0.5 ohms - 1 ohms?

**Yes**

An intermittent fault may be present in the wiring harness. Visually check for chaffed wires or other physical damage to the harness. If no fault is found in the circuit, suspect the following component(s):- EPB module- EPB module connector CA265

**No**

GO to X2.

### X2: CHECK THE ACTUATOR SIGNAL CIRCUIT FOR OPEN CIRCUIT

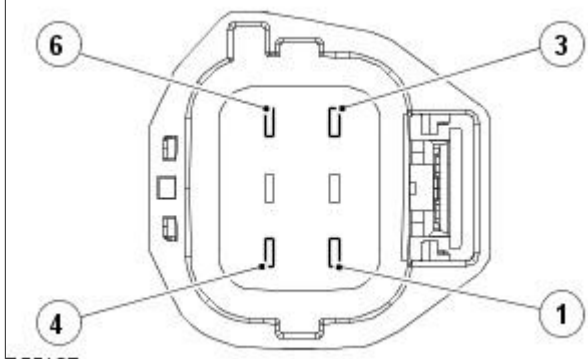

E55107

1 EPB actuator connector, CA269 disconnected.

2 Measure the resistance between:

| CA265, harness side | CA269, harness side |
|---|---|
| Electric parking brake actuator - positive - Pin 14 | Electric parking brake actuator - positive - Pin 01 |

GETtheMANUALS.org

Is the resistance less than 10 ohms?

**Yes**

GO to X3.

**No**

REPAIR the open circuit. For additional information, refer to the wiring diagrams.

**X3: CHECK THE ACTUATOR RETURN CIRCUIT FOR OPEN CIRCUIT**

1 Measure the resistance between:

| CA265, harness side | CA269, harness side |
|---|---|
| Electric parking brake actuator - negative - Pin 07 | Electric parking brake actuator - negative - Pin 06 |

Is the resistance less than 10 ohms?

**Yes**

GO to X4.

**No**

REPAIR the open circuit. For additional information, refer to the wiring diagrams.

**X4: CHECK THE ACTUATOR CIRCUIT RESISTANCE**

1 Measure the resistance between:

| CA269, component side | CA269, component side |
|---|---|
| Electric parking brake actuator - positive - Pin 01 | Electric parking brake actuator - negative - Pin 06 |

Is the resistance between 500 mohms - 1 ohm?

**Yes**

REPAIR the open circuit. For additional information, refer to the wiring diagrams.

**No**

INSTALL a new EPB actuator.

REFER to: Parking Brake Release Actuator (206-05 Parking Brake and Actuation, Removal and Installation).

## PINPOINT TEST Y : GEARSHIFT POSITION, SHORT CIRCUIT TO BATTERY (VEHICLES WITH DIESEL ENGINE ONLY)

| TEST CONDITIONS | DETAILS/RESULTS/ACTIONS |
|---|---|

**Y1: CHECK THE IN-GEAR SWITCH SUPPLY CIRCUIT**

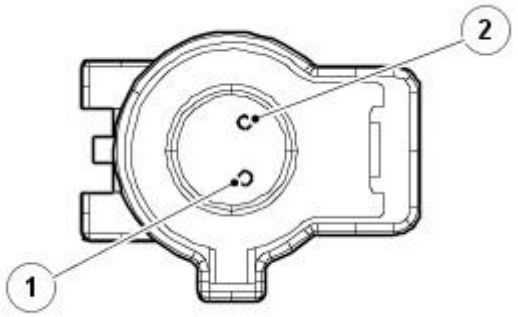


E65080

1 In-Gear (IG) switch connector, GB04 disconnected.

2 Key on, engine off.

3 Measure the voltage between:

| GB04, harness side | Vehicle battery |
|---|---|
| In-gear switch - supply | Negative terminal |

Is the voltage between 4.5 volts - 5.5 volts ?

**Yes**

GO to Y2.

**No**

GO to Y4.

**Y2: CHECK THE IN-GEAR SWITCH SIGNAL CIRCUIT FOR SHORT CIRCUIT TO POWER**

1 Measure the resistance between:

| GB04, harness side | Vehicle battery |
|---|---|
| In-gear switch - signal - Pin 02 | Positive terminal |

Is the resistance greater than 100 Kohms?

**Yes**

GO to Y3.

**No**

GO to Y6.

**Y3: CHECK THE IN-GEAR SWITCH RETURN CIRCUIT FOR SHORT CIRCUIT TO POWER**

1 Measure the resistance between:

| GB04, harness side | Vehicle battery |
|---|---|
| In-gear switch - return - Pin 01 | Negative terminal |

Is the resistance greater than 100 Kohms?

**Yes**

An intermittent fault may be present in the wiring harness. Visually check for chaffed wires or other physical damage to the harness. If no fault is found in the circuit, suspect the following component(s):- IG switch

**No**

GO to Y7.

**Y4: CHECK IF THE SHORT CIRCUIT IS IN THE HARNESS OR THE CONTROL MODULE**

1 Key off.

GETtheMANUALS.org

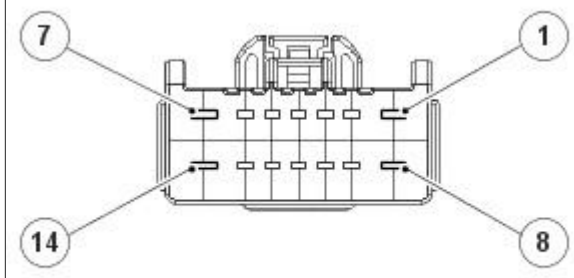

E55103

2 Electric parking brake module connector 1, CA265 disconnected.

3 Key on, engine off.

4 Measure the resistance between:

| GB04, harness side | Vehicle battery |
|---|---|
| In gear switch - supply | Negative teminal |

Is the resistance greater than 100 Kohms?

**Yes**

INSTALL a new EPB module.
REFER to: Parking Brake Module (206-05 Parking Brake and Actuation, Removal and Installation).

**No**

GO to Y5.

**Y5: CHECK IF THE SHORT CIRCUIT IS IN THE HARNESS OR THE SWITCH**

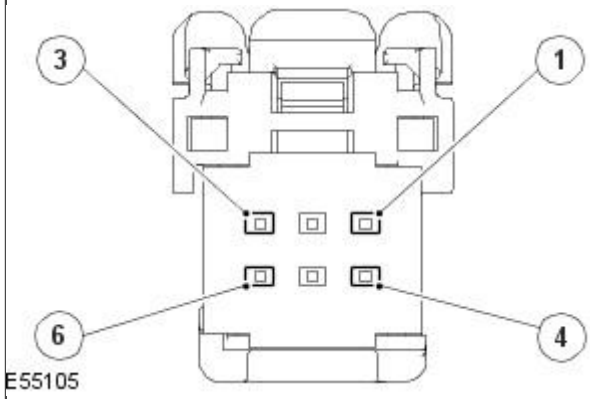

E55105

1 Clutch pedal position sensor (CLPS) connector, CA287 disconnected.

2 Measure the resistance between:

| GB04, harness side | Vehicle battery |
|---|---|
| In gear switch - supply | Negative terminal |

Is the resistance greater than 100 Kohms?

**Yes**

INSTALL a new CLPS.

**No**

REPAIR the short circuit. For additional information, refer to the wiring diagrams.

**Y6: CHECK IF THE SHORT CIRCUIT IS IN THE HARNESS OR THE CONTROL MODULE**

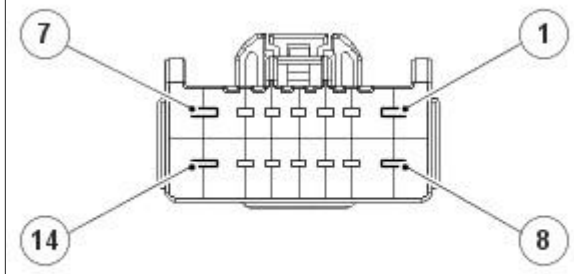

E55103

1 Electric parking brake module connector 1, CA265 disconnected.

2 Measure the resistance between:

| GB04, harness side | Vehicle battery |
|---|---|
| In-gear switch - signal - Pin 02 | Positive terminal |

Is the resistance greater than 100 Kohms?

**Yes**

INSTALL a new EPB module.
REFER to: Parking Brake Module (206-05 Parking Brake and Actuation, Removal and Installation).

**No**

REPAIR the short circuit. For additional information, refer to the wiring diagrams.

**Y7: CHECK THE IN-GEAR SWITCH CIRCUIT RESISTANCE**

GETtheMANUALS.org

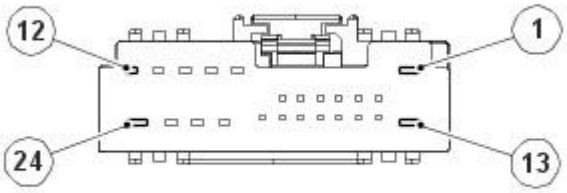

E55104

1 Electric parking brake module connector 2, CA266 disconnected.

2 Measure the resistance between:

| GB04, harness side | Vehicle battery |
|---|---|
| In-gear switch - return - Pin 01 | Positive terminal |

Is the resistance greater than 100 Kohms?

**Yes**

INSTALL a new EPB module.
REFER to: Parking Brake Module (206-05 Parking Brake and Actuation, Removal and Installation).

**No**

REPAIR the short circuit. For additional information, refer to the wiring diagrams.

## PINPOINT TEST Z : CLUTCH PEDAL POSITION SENSOR SHORT CIRCUIT TO GROUND

| TEST CONDITIONS | DETAILS/RESULTS/ACTIONS |
|---|---|

### Z1: CHECK THE 5 VOLT SUPPLY CIRCUIT FOR SHORT CIRCUIT TO GROUND

1 Key off.

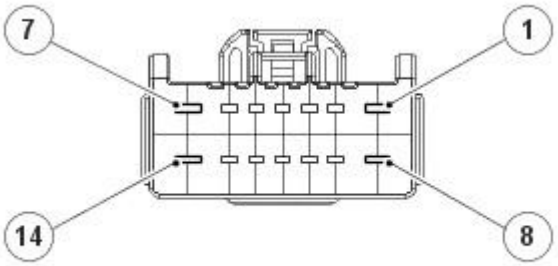

E55103

2 Electric parking brake module connector 1, CA265 disconnected.

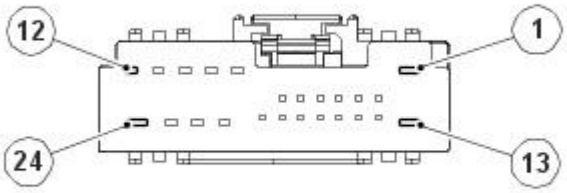

E55104

3 Electric parking brake module connector 2, CA266 disconnected.

4 Key on, engine off.

5 Measure the resistance between:

| CA265, harness side | Vehicle battery |
|---|---|
| Clutch position sensor - supply - Pin 05 | Negative terminal |

Is the resistance greater than 100 Kohms?

**Yes**

GO to Z2.

**No**

GO to Z6.

### Z2: CHECK THE SIGNAL CIRCUIT FOR SHORT CIRCUIT TO GROUND

1 Measure the resistance between:

| CA265, harness side | Vehicle battery |
|---|---|
| Clutch position sensor - signal - Pin 06 | Negative terminal |

Is the resistance greater than 100 Kohms?

**Yes**

GO to Z3.

**No**

GO to Z7.

GETtheMANUALS.org

### Z3: CHECK THE SIGNAL CIRCUIT FOR HIGH RESISTANCE

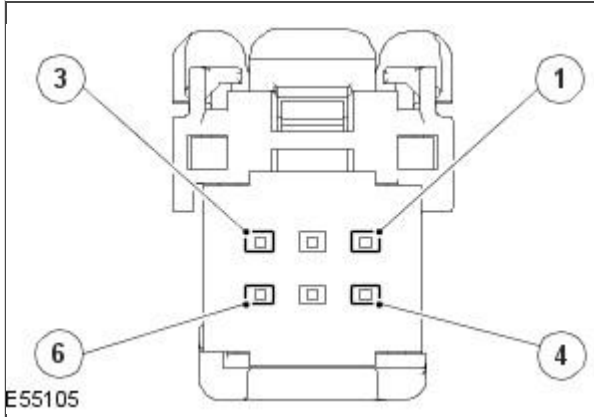


1 Clutch pedal position sensor (CLPS) connector, CA287 disconnected.

2 Measure the resistance between:

| CA265, harness side | CA287, harness side |
|---|---|
| Clutch position sensor - signal - Pin 06 | Clutch position sensor - signal - Pin 02 |

Is the resistance less than 10 ohms?

**Yes**

REPAIR the high resistance circuit. For additional information, refer to the wiring diagrams.

**No**

GO to Z4.

**Z4: CHECK THE 5 VOLT SUPPLY CIRCUIT FOR HIGH RESISTANCE**

1 Measure the resistance between:

| CA265, harness side | CA287, harness side |
|---|---|
| Clutch position sensor - supply - Pin 05 | Clutch position sensor - supply - Pin 03 |

Is the resistance less than 10 ohms?

**Yes**

GO to Z5.

**No**

REPAIR the high resistance circuit. For additional information, refer to the wiring diagrams.

**Z5: CHECK THE SENSOR RETURN CIRCUIT FOR HIGH RESISTANCE**

1 Measure the resistance between:

| CA266, harness side | CA287, harness side |
|---|---|
| Clutch position sensor - ground | Clutch position sensor - ground - pin 01 |

Is the resistance less than 10 ohms?

**Yes**

An intermittent fault may be present in the wiring harness. Visually check for chaffed wires or other physical damage to the harness. If no fault is found in the circuit, suspect the following components(s):- EPB module- CLPS- EPB module connector CA265- EPB module connector CA266- CLPS connector CA287

**No**

REPAIR the high resistance circuit. For additional information, refer to the wiring diagrams.

**Z6: CHECK IF THE SHORT CIRCUIT IS IN THE HARNESS OR THE SENSOR**

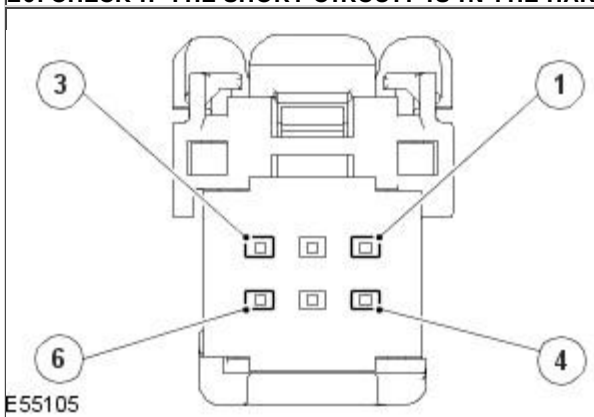


1 Clutch pedal position sensor (CLPS) connector, CA287 disconnected.

2 Measure the resistance between:

| CA265, harness side | Vehicle battery |
|---|---|
| Clutch position sensor - supply - Pin 05 | Negative terminal |

Is the resistance greater than 100 Kohms?

**Yes**

INSTALL a new CLPS.

**No**

REPAIR the short circuit. For additional information, refer to the wiring diagrams.

**Z7: CHECK IF THE SHORT CIRCUIT IS IN THE HARNESS OR THE SENSOR**

GETtheMANUALS.org

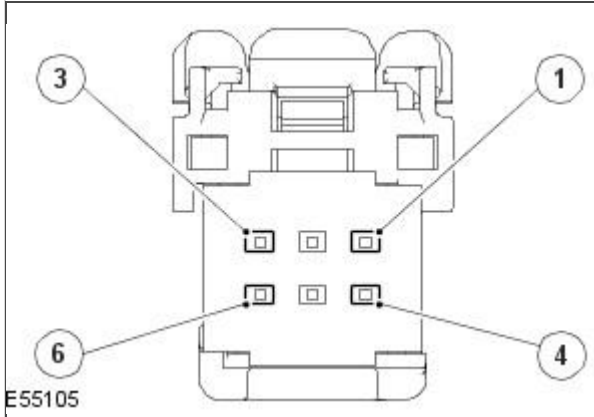


1 Clutch pedal position sensor (CLPS) connector, CA287 disconnected.

2 Measure the resistance between:

| CA265, harness side | Vehicle battery |
|---|---|
| Clutch position sensor - signal - Pin 06 | Negative terminal |

Is the resistance greater than 100 Kohms?

**Yes**

INSTALL a new CLPS.

**No**

REPAIR the short circuit. For additional information, refer to the wiring diagrams.

## PINPOINT TEST AA : CLUTCH PEDAL POSITION SENSOR, SHORT CIRCUIT TO POWER

| TEST CONDITIONS | DETAILS/RESULTS/ACTIONS |
|---|---|

### AA1: CHECK THE 5 VOLT SUPPLY CIRCUIT FOR SHORT CIRCUIT TO POWER

1 Key off.

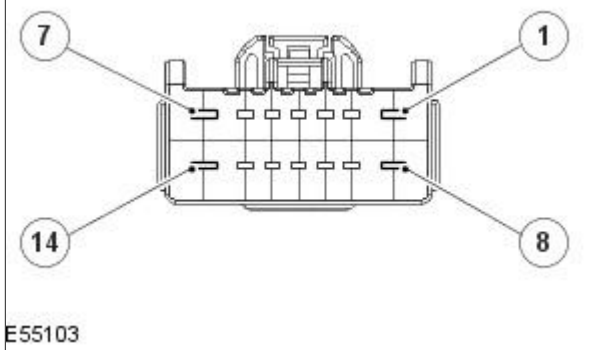


2 Electric parking brake module connector 1, CA265 disconnected.

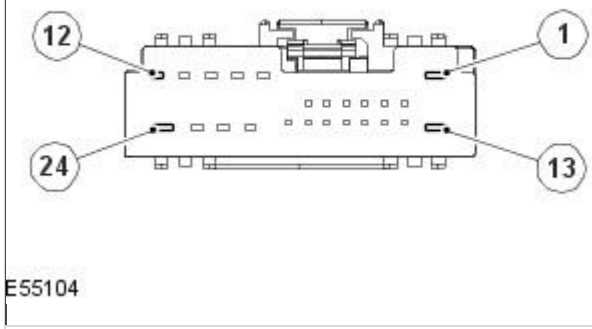


3 Electric parking brake module connector 2, CA266 disconnected.

4 Key on, engine off.

5 Measure the resistance between:

| CA265, harness side | Vehicle battery |
|---|---|
| Clutch position sensor - supply - Pin 05 | Positive terminal |

Is the resistance greater than 100 Kohms?

**Yes**

GO to AA2.

**No**

GO to AA4.

### AA2: CHECK THE SIGNAL CIRCUIT FOR SHORT CIRCUIT TO POWER

1 Measure the resistance between:

| CA265, harness side | Vehicle battery |
|---|---|
| Clutch position sensor - signal - Pin 06 | Positive terminal |

Is the resistance greater than 100 Kohms?

**Yes**

GO to AA3.

**No**

GO to AA5.

### AA3: CHECK THE SENSOR RETURN GROUND CIRCUIT FOR SHORT CIRCUIT TO POWER

GETtheMANUALS.org

1 Measure the resistance between:

| CA266, harness side | Vehicle battery |
|---|---|
| Clutch pedal position sensor - ground - Pin 03 | Positive terminal |

Is the resistance less than 10 ohms?

**Yes**

An intermittent fault may be present in the wiring harness. Visually check for chaffed wires or other physical damage to the harness. If no fault is found in the circuit, suspect the following component(s):- EPB module- EPB module connector CA265- EPB module connector CA266

**No**

GO to AA6.

**AA4: CHECK IF THE SHORT CIRCUIT IS IN THE HARNESS OR THE SENSOR**

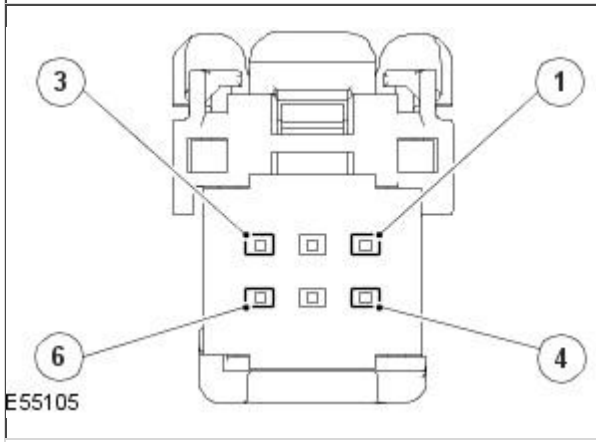


1 Clutch pedal position sensor (CLPS) connector, CA287 disconnected.

2 Measure the resistance between:

| CA265, harness side | Vehicle battery |
|---|---|
| Clutch pedal position sensor - supply - Pin 05 | Positive terminal |

Is the resistance greater than 100 Kohms?

**Yes**

INSTALL a new CLPS.

**No**

REPAIR the short circuit. For additional information, refer to the wiring diagrams.

**AA5: CHECK IF THE SHORT CIRCUIT IS IN THE HARNESS OR THE SENSOR**

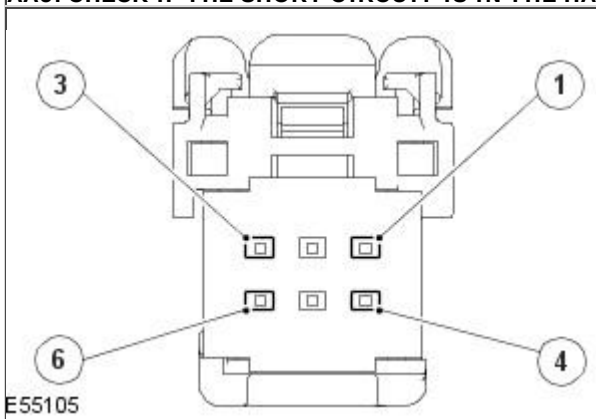


1 Clutch pedal position sensor (CLPS) connector, CA287 disconnected.

2 Measure the resistance between:

| CA265, harness side | Vehicle battery |
|---|---|
| Clutch position sensor - signal - Pin 06 | Positive terminal |

Is the resistance greater than 100 Kohms?

**Yes**

INSTALL a new CLPS.

**No**

REPAIR the short circuit. For additional information, refer to the wiring diagrams.

**AA6: CHECK IF THE SHORT CIRCUIT IS IN THE HARNESS OR THE SENSOR**

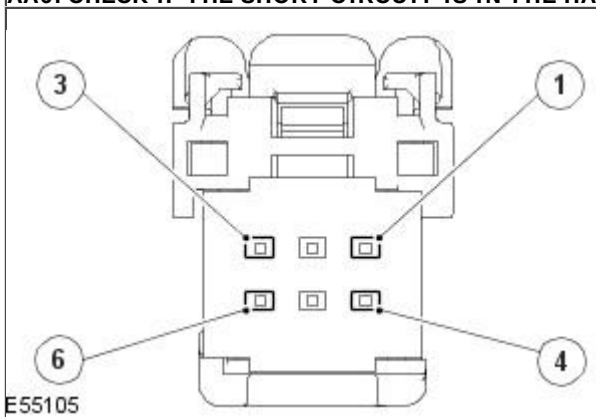


1 Clutch pedal position sensor (CLPS) connector, CA287 disconnected.

2 Measure the resistance between:

| CA266, harness side | Vehicle battery |
|---|---|
| Clutch pedal position sensor - ground - Pin 03 | Positive terminal |

GETtheMANUALS.org

| | |
|---|---|
| | Is the resistance greater than 100 Kohms?<br>**Yes**<br>INSTALL a new CLPS.<br>**No**<br>REPAIR the short circuit. For additional information, refer to the wiring diagrams. |

## PINPOINT TEST AB : GEARSHIFT POSITION FAULT, GENERAL ELECTRICAL FAILURE (VEHICLES WITH DIESEL ENGINE ONLY)

| TEST CONDITIONS | DETAILS/RESULTS/ACTIONS |
|---|---|
| **AB1: CHECK THE 5 VOLT SUPPLY CIRCUIT FOR SHORT CIRCUIT TO GROUND** | |
| | 1 Key off. |
| 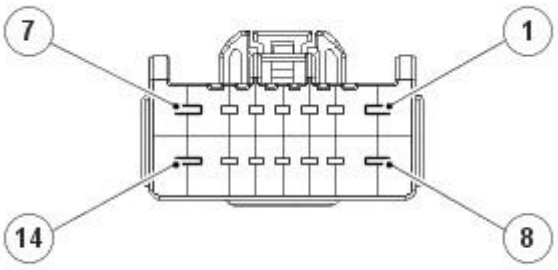 <br>E55103 | 2 Electric parking brake module connector 1, CA265 disconnected. |
| 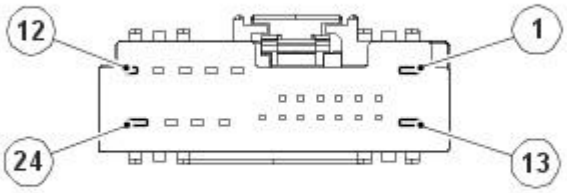 <br>E55104 | 3 Electric parking brake module connector 2, CA266 disconnected. |
| | 4 Key on, engine off.<br>5 Measure the resistance between:<br>**CA265, harness side**: Clutch position sensor - supply - Pin 05<br>**Vehicle battery**: Negative terminal |
| | Is the resistance greater than 100 Kohms?<br>**Yes**<br>GO to AB2.<br>**No**<br>GO to AB6. |
| **AB2: CHECK THE SIGNAL CIRCUIT FOR SHORT CIRCUIT TO GROUND** | |
| | 1 Measure the resistance between:<br>**CA265, harness side**: In-gear switch - signal - Pin 03<br>**Vehicle battery**: Negative terminal |
| | Is the resistance greater than 100 Kohms?<br>**Yes**<br>GO to AB3.<br>**No**<br>GO to AB8. |
| **AB3: CHECK THE SIGNAL CIRCUIT FOR OPEN CIRCUIT** | |
| 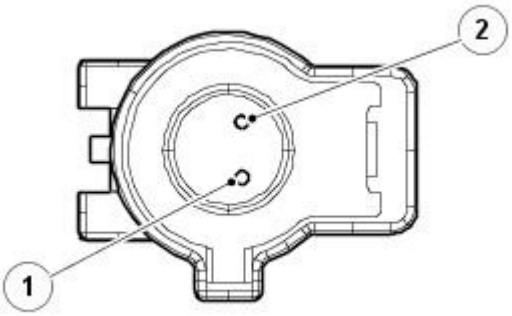 <br>E65080 | 1 In-Gear (IG) switch connector, GB04 disconnected. |
| | 2 Measure the resistance between:<br>**CA265, harness side**: In-gear switch - signal - Pin 03<br>**GB04, harness side**: In-gear switch - signal - Pin 02 |

GETtheMANUALS.org

Is the resistance less than 10 ohms?

**Yes**

GO to AB4.

**No**

REPAIR the open circuit. For additional information, refer to the wiring diagrams.

**AB4: CHECK THE SWITCH RETURN CIRCUIT FOR OPEN CIRCUIT**

1 Measure the resistance between:

| CA266, harness side | GB04, harness side |
|---|---|
| In-gear switch - return - Pin 15 | In-gear switch - signal - Pin 02 |

Is the resistance less than 10 ohms?

**Yes**

GO to AB5.

**No**

REPAIR the open circuit. For additional information, refer to the wiring diagrams.

**AB5: CHECK THE 5 VOLT SUPPLY CIRCUIT FOR OPEN CIRCUIT**

1 Measure the resistance between:

| CA265, harness side | GB04, harness side |
|---|---|
| Clutch position sensor - supply - Pin 05 | Clutch position sensor - supply - Pin 03 |

Is the resistance less than 10 ohms?

**Yes**

An intermittent fault may be present in the wiring harness. Visually check for chaffed wires or other physical damage to the harness. If no fault is found in the circuit, suspect the following component(s):- IG switch- IG switch connector GB04- EPB module- EPB module connector CA265- EPB module connector CA266

**No**

REPAIR the open circuit. For additional information, refer to the wiring diagrams.

**AB6: CHECK IF THE SHORT CIRCUIT IS IN THE HARNESS OR THE IN-GEAR SWITCH**

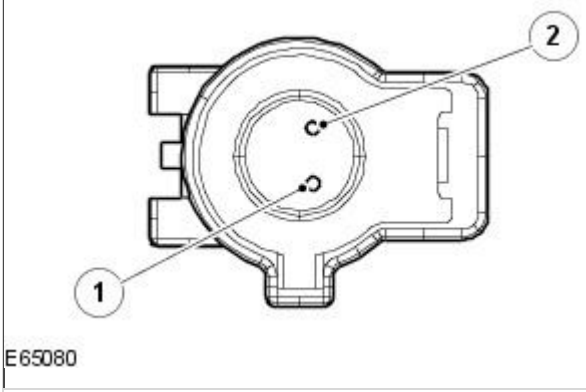


1 In-Gear (IG) switch connector, GB04 disconnected.

2 Measure the resistance between:

| CA265, harness side | Vehicle battery |
|---|---|
| Clutch position sensor - supply - Pin 05 | Negative terminal |

Is the resistance greater than 100 Kohms?

**Yes**

INSTALL a new in-gear switch.

**No**

GO to AB7.

**AB7: CHECK IF THE SHORT CIRCUIT IS IN THE HARNESS OR THE CLUTCH POSITION SENSOR**

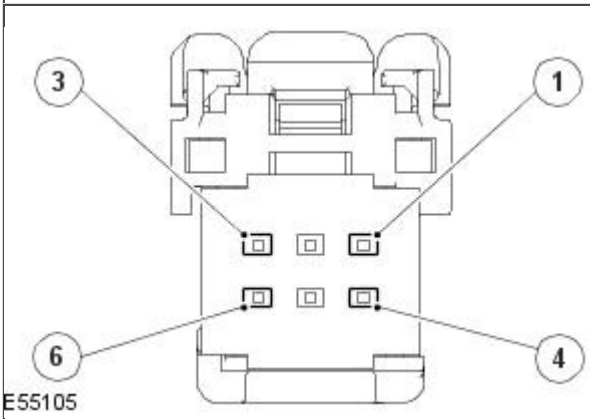


1 Clutch pedal position sensor (CLPS) connector, CA287 disconnected.

2 Measure the resistance between:

| CA265, harness side | Vehicle battery |
|---|---|
| Clutch position sensor - supply - Pin 05 | Negative terminal |

Is the resistance greater than 100 Kohms?

**Yes**

INSTALL a new CLPS.

**No**

REPAIR the short circuit. For additional information, refer to the wiring diagrams.

**AB8: CHECK IF THE SHORT CIRCUIT IS IN THE HARNESS OR THE SWITCH**

GETtheMANUALS.org

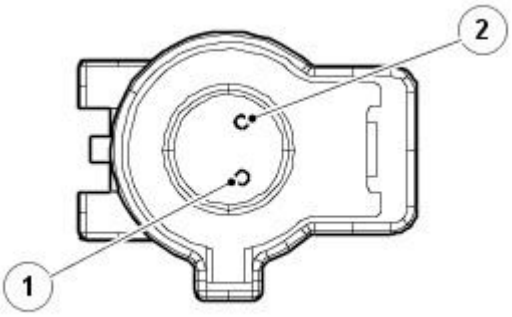

E65080

1 In-Gear (IG) switch connector, GB04 disconnected.

2 Measure the resistance between:

| CA265, harness side | Vehicle battery |
|---|---|
| In-gear switch - signal - Pin 03 | Negative terminal |

Is the resistance greater than 100 Kohms?

**Yes**

INSTALL a new in-gear switch.

**No**

REPAIR the short circuit. For additional information, refer to the wiring diagrams.

## PINPOINT TEST AC : PRIMARY RELEASE SWITCH CIRCUIT FAULT

| TEST CONDITIONS | DETAILS/RESULTS/ACTIONS |
|---|---|

### AC1: CHECK THE PRIMARY RELEASE SWITCH SIGNAL CIRCUIT FOR SHORT CIRCUIT TO POWER

1 Key off.

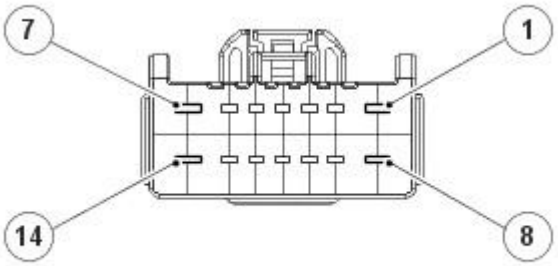

E55103

2 Electric parking brake module connector 1, CA265 disconnected.

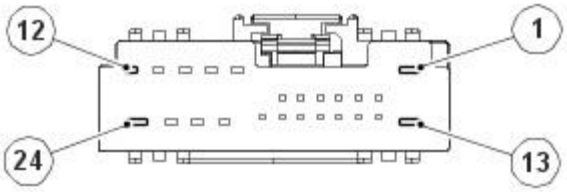

E55104

3 Electric parking brake module connector 2, CA266 disconnected.

4 Key on, engine off.

5 Measure the resistance between:

| CA265, harness side | Vehicle battery |
|---|---|
| Primary release switch signal 1 - pin 11 | Positive terminal |

Is the resistance greater than 100 Kohms?

**Yes**

GO to AC2.

**No**

GO to AC8.

### AC2: CHECK THE PRIMARY APPLY SWITCH SIGNAL CIRCUIT FOR SHORT CIRCUIT TO POWER

1 Measure the resistance between:

| CA265, harness side | Vehicle battery |
|---|---|
| Primary apply switch signal 1 - pin 10 | Positive terminal |

Is the resistance greater than 100 Kohms?

**Yes**

GO to AC3.

**No**

GO to AC9.

### AC3: CHECK THE SECONDARY APPLY SWITCH SIGNAL CIRCUIT FOR SHORT CIRCUIT TO POWER

GETtheMANUALS.org

1 Measure the resistance between:

| CA266, harness side | Vehicle battery |
|---|---|
| Secondary apply switch signal 2 - pin 02 | Positive terminal |

Is the resistance greater than 100 Kohms?

**Yes**

GO to AC4.

**No**

GO to AC10.

**AC4: CHECK THE SECONDARY RELEASE SWITCH SIGNAL CIRCUIT FOR SHORT CIRCUIT TO POWER**

1 Measure the resistance between:

| CA266, harness side | Vehicle battery |
|---|---|
| Secondary release switch signal 2 - pin 14 | Positive terminal |

Is the resistance greater than 100 Kohms?

**Yes**

GO to AC5.

**No**

GO to AC11.

**AC5: CHECK THE PRIMARY RELEASE SWITCH SIGNAL CIRCUIT FOR HIGH RESISTANCE**

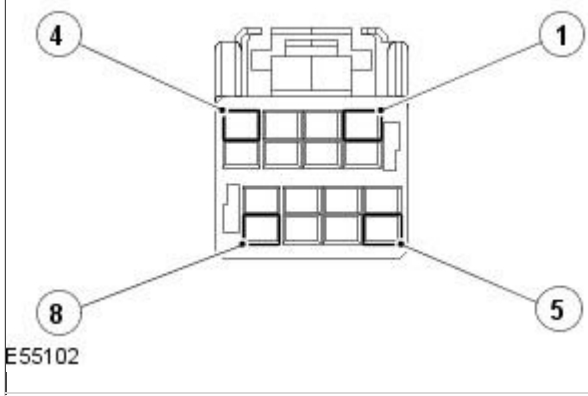


1 Electric parking brake switch connector, CA243 disconnected.

2 Measure the resistance between:

| CA265, harness side | CA243, harness side |
|---|---|
| Primary release switch signal 1 - pin 11 | Primary release switch signal 1 - pin 04 |

Is the resistance less than 10 ohms?

**Yes**

GO to AC6.

**No**

REPAIR the high resistance circuit. For additional information, refer to the wiring diagrams.

**AC6: CHECK THE APPLY SWITCH RETURN CIRCUIT FOR HIGH RESISTANCE**

1 Measure the resistance between:

| CA266, harness side | CA243, harness side |
|---|---|
| Switch return - pin 06 | Switch return - pin 06 |

Is the resistance less than 10 ohms?

**Yes**

GO to AC7.

**No**

INSTALL a new parking brake switch.
REFER to: Parking Brake Switch (206-05 Parking Brake and Actuation, Removal and Installation).

**AC7: CHECK THE SWITCH RESISTANCE**

1 Measure the resistance between:

| CA243, component side | CA243, component side |
|---|---|
| Switch release signal 1 - pin 04 | Switch return - pin 06 |

Is the resistance between 595 and 611 ohms?

**Yes**

An intermittent fault may be present in the wiring harness. Visually check for chaffed wires or other physical damage to the harness. If no fault is found in the circuit, suspect the following component(s):- EPB module- EPB module connector CA265- EPB module connector CA266

**No**

INSTALL a new parking brake switch.
REFER to: Parking Brake Switch (206-05 Parking Brake and Actuation, Removal and Installation).

**AC8: CHECK IF THE SHORT CIRCUIT IS IN THE HARNESS OR THE SWITCH**

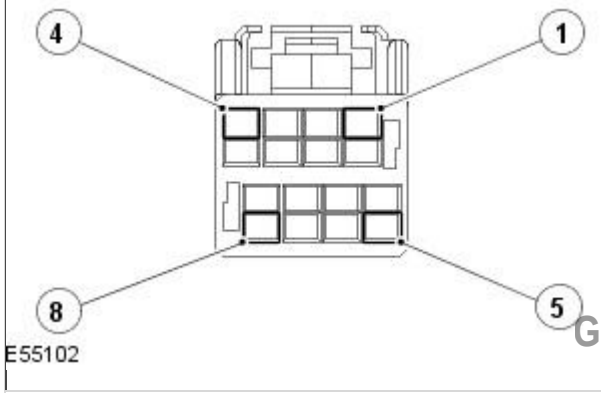


1 Electric parking brake switch connector, CA243 disconnected.

GETtheMANUALS.org

2 Measure the resistance between:

| CA265, component side | Vehicle battery |
|---|---|
| Release switch signal 1 - pin 11 | Positive terminal |

Is the resistance greater than 100 Kohms?

**Yes**

INSTALL a new parking brake switch.
REFER to: Parking Brake Switch (206-05 Parking Brake and Actuation, Removal and Installation).

**No**

REPAIR the short circuit. For additional information, refer to the wiring diagrams.

**AC9: CHECK IF THE SHORT CIRCUIT IS IN THE HARNESS OR THE SWITCH**

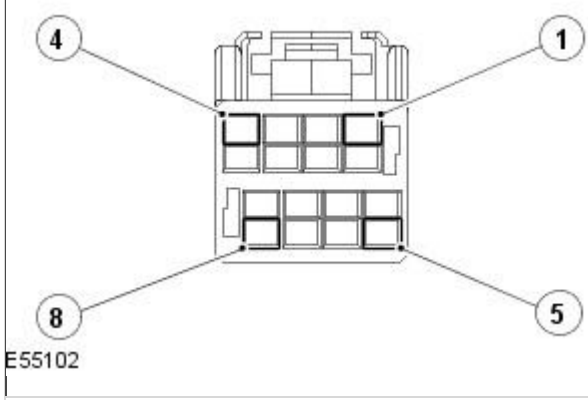


1 Electric parking brake switch connector, CA243 disconnected.

2 Measure the resistance between:

| CA265, component side | Vehicle battery |
|---|---|
| Apply switch signal 1 - pin 10 | Positive terminal |

Is the resistance greater than 100 Kohms?

**Yes**

INSTALL a new parking brake switch.
REFER to: Parking Brake Switch (206-05 Parking Brake and Actuation, Removal and Installation).

**No**

REPAIR the short circuit. For additional information, refer to the wiring diagrams.

**AC10: CHECK IF THE SHORT CIRCUIT IS IN THE HARNESS OR THE SWITCH**

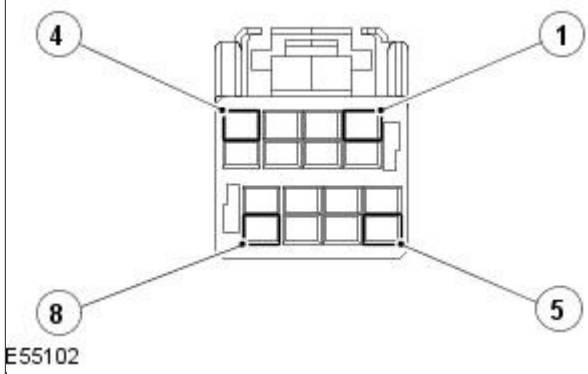


1 Electric parking brake switch connector, CA243 disconnected.

2 Measure the resistance between:

| CA266, component side | Vehicle battery |
|---|---|
| Apply switch signal 2 - pin 02 | Positive terminal |

Is the resistance greater than 100 Kohms?

**Yes**

INSTALL a new parking brake switch.
REFER to: Parking Brake Switch (206-05 Parking Brake and Actuation, Removal and Installation).

**No**

REPAIR the short circuit. For additional information, refer to the wiring diagrams.

**AC11: CHECK IF THE SHORT CIRCUIT IS IN THE HARNESS OR THE SWITCH**

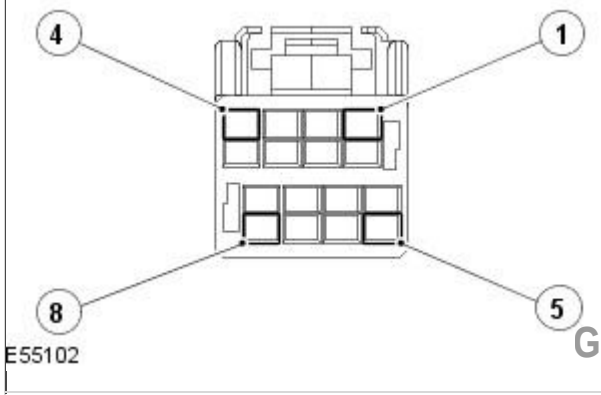


1 Electric parking brake switch connector, CA243 disconnected.

GETtheMANUALS.org

| | |
|---|---|
| | **2** Measure the resistance between: |

| CA266, component side | Vehicle battery |
|---|---|
| Release switch signal 2 - pin 14 | Positive terminal |

| | |
|---|---|
| | Is the resistance greater than 100 Kohms?<br>**Yes**<br>INSTALL a new parking brake switch.<br>REFER to: Parking Brake Switch (206-05 Parking Brake and Actuation, Removal and Installation).<br>**No**<br>REPAIR the short circuit. For additional information, refer to the wiring diagrams. |

GETtheMANUALS.org

# Parking Brake and Actuation - Parking BrakeVIN Range: N52048->N99999

Diagnosis and Testing

## Overview

There are some changes to diagnostics for 2006 my, the most obvious of which will be the change to 7-digit diagnostic trouble codes (DTCs) from the familiar 5-digit.

Refer to the DTC index in this section for guidance on how to use these codes with the Jaguar approved diagnostic system or a scan tool.

For additional information on the description and operation of the system.
REFER to: Parking Brake (206-05 Parking Brake and Actuation, Description and Operation).

## Inspection and Verification

1. **1.** Verify the customer concern.
2. **2.** Visually inspect for obvious signs of mechanical or electrical damage.

**Visual Inspection Chart**

| Mechanical | Electrical |
|---|---|
| • Parking brake cable<br>• Parking brake actuator<br>• Parking brake caliper<br>• Parking brake pads<br>• Drop link caps | • Fuse(s)<br>• Wiring harness/electrical connectors<br>• Check for bent/corroded pins<br>• Parking brake switch<br>• Parking brake module |

3. **3.** If an obvious cause for an observed or reported concern is found, correct the cause (if possible) before proceeding to the next step.
4. **4.** If the cause is not visually evident use the Jaguar approved diagnostic system or a scan tool to retrieve the fault codes before proceeding to the diagnostic trouble code (DTC) Index.

## Symptom Chart

| Symptom | Possible Sources | Action |
|---|---|---|
| The parking brake will not engage or release | • Cables fouled, trapped or damaged<br>• Cables incorrectly routed or fixed<br>• Rear lining wear<br>• Service brake incorrectly adjusted following lining change<br>• Caliper malfunction<br>• Actuator malfunction | • Check the rear and primary cables for fouling, trapping or damage<br>• Check the cable routing between caliper and subframe mountings. Make sure the cables sit above the rear anti-roll bar drop link caps, and that the drop link caps are not damaged<br>• Check that the rear cable end fitting connector is correctly fitted into the caliper bracket, and is not damaged<br>• Check that the rear cable end fitting connector is correctly fitted into the subframe bracket and is not damaged<br>• Check the 'C' clip between the cable and the subframe for fit/damage<br>• Check that the cable is correctly located into the reaction and connector brackets<br>• Inspect the rear brake linings (parkbrake caliper linings for vehicles with supercharger) for wear<br>• Check the parkbrake cable for correct adjustment<br>• Fully retract the cables. Pump the brake pedal hard five times<br>• Check the condition of the rear caliper (parkbrake caliper for vehicles with supercharger). Make sure the caliper return spring is correctly fitted<br>• Check the actuator for damage and/or excessive noise in normal operation<br>• For additional information, REFER to: (206-05 Parking Brake and Actuation)<br>Parking Brake Cable Tension Release (General Procedures),<br>Parking Brake Pads - Vehicles With: High Performance Brakes (Removal and Installation),<br>Parking Brake Cable (Removal and Installation),<br>Parking Brake Module (Removal and Installation),<br>Parking Brake Release Actuator (Removal and Installation). |

## DTC index

• NOTE: Generic scan tools may not read the codes listed, or may read only 5-digit codes. Match the 5 digits from the scan tool to the first 5 digits of the 7-digit code listed to identify the fault (the last 2 digits give extra information read by the manufacturer-approved diagnostic system).

| DTC | Description | Possible cause | Action |
|---|---|---|---|
| B216501 (vehicles with petrol engine only) | Gearshift position sensor circuit | • Gearshift position sensor circuit: short circuit to power<br>• Gearshift position sensor circuit: high resistance | For gearshift position sensor tests, GO to Pinpoint Test N. |
| B216501 (vehicles with diesel engine only) | Gearshift position sensor circuit | • Gearshift position sensor circuit: short circuit to ground<br>• Gearshift position sensor circuit: high resistance | For gearshift position sensor tests, GO to Pinpoint Test AB. |
| B216512 (vehicles with petrol engine only) | Gearshift position sensor circuit | • Gearshift position sensor circuit: short circuit to ground | For gearshift position sensor tests, GO to Pinpoint Test W. |
| B216512 (vehicles with diesel engine only) | Gearshift position sensor circuit | • Gearshift position sensor circuit: short circuit to power | For gearshift position sensor tests, GO to Pinpoint Test Y. |

GETtheMANUALS.org

| DTC | Description | Possible cause | Action |
|---|---|---|---|
| C109400 | Primary apply switch circuit | • Primary apply switch circuit: short circuit to power<br>• Primary apply switch circuit: high resistance | For primary apply switch circuit tests, GO to Pinpoint Test A. |
| C113111 (vehicles with petrol engine only) | Clutch pedal position sensor | • Clutch pedal position sensor circuit: short circuit to ground<br>• Clutch pedal position sensor circuit: high resistance | For clutch pedal position sensor tests, GO to Pinpoint Test Z. |
| C113111 (vehicles with diesel engine only) | Clutch pedal position sensor | • Clutch pedal position sensor circuit: short circuit to ground<br>• Clutch pedal position sensor circuit: high resistance | For clutch pedal position sensor tests, GO to Pinpoint Test C. |
| C113112 (vehicles with petrol engine only) | Clutch pedal position sensor | • Clutch pedal position sensor circuit: short circuit to power | For clutch pedal position sensor tests, GO to Pinpoint Test AA. |
| C113112 (vehicles with diesel engine only) | Clutch pedal position sensor | • Clutch pedal position sensor circuit: short circuit to power | For clutch pedal position sensor tests, GO to Pinpoint Test F. |
| C140800 | Primary release switch circuit | • Voltage out of range | For primary release switch circuit tests, GO to Pinpoint Test H. |
| C140900 | Primary apply switch circuit | • Voltage out of range | For primary apply switch circuit tests, GO to Pinpoint Test I. |
| C176900 | Primary apply switch circuit | • Primary apply switch circuit: short circuit to ground | For primary apply switch circuit tests, GO to Pinpoint Test J. |
| C178200 | Primary release switch circuit | • Primary release switch circuit: short circuit to power<br>• Primary release switch circuit: high resistance | For primary release switch circuit tests, GO to Pinpoint Test AC. |
| C178300 | Primary release switch circuit | • Primary release switch circuit: short circuit to ground | For primary release switch circuit tests, GO to Pinpoint Test L. |
| C178400 | Park brake motor output | • Park brake motor output: short circuit to ground | GO to Pinpoint Test M. |
| C178500 | Park brake motor output | • Park brake motor output: high resistance | GO to Pinpoint Test X. |
| C178600 | Park brake motor output | • Park brake motor output: short circuit to power | GO to Pinpoint Test P. |
| C179900 | Hall effect sensor | • Hall effect sensor: circuit fault<br>• Hall effect sensor: mechanical fault | For hall effect sensor tests, GO to Pinpoint Test Q. |
| C180100 | Greater than expected actuator current draw reached before expected travel (actuator current draw compared to expected number of turns) | • Cables fouled, trapped or damaged<br>• Cables incorrectly routed or fixed<br>• Rear lining wear<br>• Service brake not correctly adjusted following lining change<br>• Caliper malfunction<br>• Actuator malfunction | Refer to the symptom chart for actions regarding mechanical operation faults. |
| C180200 | Greater than expected travel for measured current draw (actuator current draw compared to expected number of turns) | • Cables incorrectly routed or fixed<br>• Rear lining wear<br>• Service brake not correctly adjusted following lining change<br>• Caliper malfunction<br>• Actuator malfunction | Refer to the symptom chart for actions regarding mechanical operation faults. |
| C180300 | Less than expected travel for parking brake release | • Parking brake motor does not fully release due to a mechanical fault | For motor release tests, GO to Pinpoint Test S. |
| C198900 | All switch circuits have an active voltage at the same time | • Park brake apply and release switch contacts energised simultaneously | GO to Pinpoint Test U. |
| C1D0711 | Secondary apply switch | • Secondary apply switch circuit: short circuit to ground | For secondary apply switch tests, GO to Pinpoint Test E. |
| C1D0715 | Secondary apply switch | • Secondary apply switch circuit: short circuit to power<br>• Secondary apply switch circuit: high resistance | For secondary apply switch tests, GO to Pinpoint Test G. |
| C1D071C | Secondary apply switch | • Voltage out of range | For secondary apply switch tests, GO to Pinpoint Test B. |
| C1D0811 | Secondary release switch | • Secondary release switch circuit: short circuit to ground | For secondary release switch tests, GO to Pinpoint Test T. |

GETtheMANUAL.org

| DTC | Description | Possible cause | Action |
|---|---|---|---|
| C1D0815 | Secondary release switch | • Secondary release switch circuit: short circuit to power<br>• Secondary release switch circuit: high resistance | For secondary release switch tests, GO to Pinpoint Test R. |
| C1D081C | Secondary release switch | • Voltage out of range | For secondary release switch tests, GO to Pinpoint Test D. |
| C1D1564 | Brake switch | • Failed plausibility check with CAN data | For brake switch tests, GO to Pinpoint Test V. |
| C1D1614 | High power battery feed circuit | • High power battery feed circuit : short ciruit to ground<br>• High power battery feed circuit : high resistance | For high power feed tests, GO to Pinpoint Test K. |

## Pinpoint Tests

**PINPOINT TEST A : PRIMARY APPLY SWITCH CIRCUIT FAILURE**

| TEST CONDITIONS | DETAILS/RESULTS/ACTIONS |
|---|---|
| **A1: CHECK THE PRIMARY APPLY SIGNAL CIRCUIT FOR SHORT CIRCUIT TO POWER** | |
| | 1 Key off. |
| 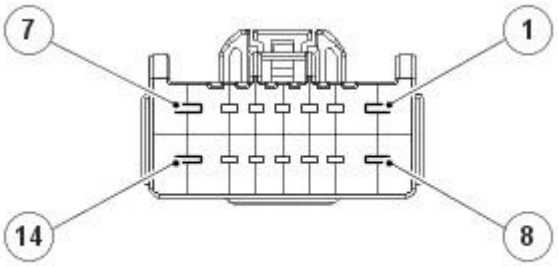 <br>E55103 | 2 Electric parking brake module connector 1, CA265 disconnected. |
| 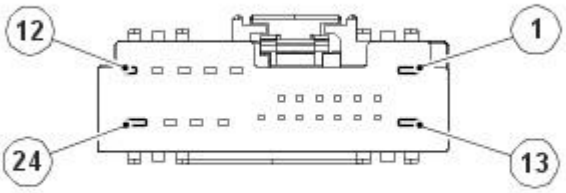 <br>E55104 | 3 Electric parking brake module connector 2, CA266 connector disconnected. |
| | 4 Key on, engine off.<br>5 Measure the resistance between:<br>**CA265, harness side** — **Vehicle battery**<br>Electric parking brake switch apply 1 - signal - Pin 10 — Positive terminal |
| | Is the resistance greater than 100 Kohms?<br>**Yes**<br>GO to A2.<br>**No**<br>GO to A8. |
| **A2: CHECK THE PRIMARY RELEASE SIGNAL CIRCUIT FOR SHORT CIRCUIT TO POWER** | |
| | 1 Measure the resistance between:<br>**CA265, harness side** — **Vehicle battery**<br>Electric parking brake switch apply 1 - signal - Pin 11 — Positive terminal |
| | Is the resistance greater than 100 Kohms?<br>**Yes**<br>GO to A3.<br>**No**<br>GO to A9. |
| **A3: CHECK THE SECONDARY APPLY SIGNAL CIRCUIT FOR SHORT CIRCUIT TO POWER** | |
| | 1 Measure the resistance between:<br>**CA266, harness side** — **Vehicle battery**<br>Electric parking brake switch apply 2 - signal - Pin 02 — Positive terminal |
| | Is the resistance greater than 100 Kohms?<br>**Yes**<br>GO to A4.<br>**No**<br>GO to A10. |
| **A4: CHECK THE SECONDARY RELEASE SIGNAL CIRCUIT FOR SHORT CIRCUIT TO POWER** | |

GETthemANUALS.org

1 Measure the resistance between:

| CA266, harness side | Vehicle battery |
|---|---|
| Electric parking brake switch release 2 - signal - Pin 14 | Positive terminal |

Is the resistance greater than 100 Kohms?

**Yes**

GO to A5.

**No**

GO to A11.

**A5: CHECK THE PRIMARY APPLY SIGNAL CIRCUIT FOR OPEN CIRCUIT**

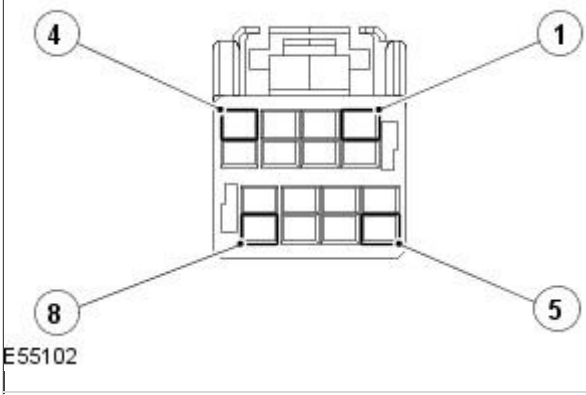


1 Electric parking brake switch connector, CA243 disconnected.

2 Measure the resistance between:

| CA265, harness side | CA243, harness side |
|---|---|
| Electric parking brake switch apply 1 - signal - Pin 10 | Electric parking brake switch apply 1 - signal - Pin 08 |

Is the resistance less than 10 ohms?

**Yes**

GO to A6.

**No**

REPAIR the open circuit. For additional information, refer to the wiring diagrams.

**A6: CHECK THE SWITCH RETURN CIRCUIT FOR OPEN CIRCUIT**

1 Measure the resistance between:

| CA266, harness side | CA243, harness side |
|---|---|
| Electric parking brake switch - switch return - Pin 06 | Electric parking brake switch - switch return - Pin 06 |

Is the resistance less than 10 ohms?

**Yes**

GO to A7.

**No**

REPAIR the open circuit. For additional information, refer to the wiring diagrams.

**A7: CHECK THE ELECTRIC PARKING BRAKE SWITCH**

1 Measure the resistance between:

| CA243, component side | CA243, component side |
|---|---|
| Electric parking brake switch apply 1 - signal - Pin 08 | Electric parking brake switch - switch return - Pin 06 |

Is the resistance between 595 ohms - 611 ohms?

**Yes**

An intermittent fault may be present in the wiring harness. Visually check for chaffed wires or other physical damage to the harness. If no fault is found in the circuit, suspect the following component(s):- EPB module- EPB module connector CA265- EPB module connector CA266

**No**

INSTALL a new EPB switch.

REFER to: Parking Brake Switch (206-05 Parking Brake and Actuation, Removal and Installation).

**A8: CHECK IF THE SHORT CIRCUIT IS IN THE HARNESS OR THE SWITCH**

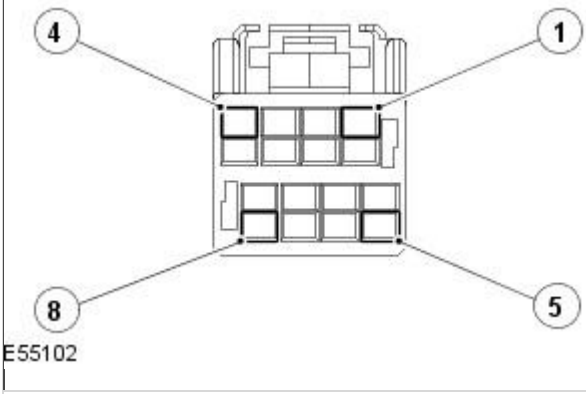


1 Electric parking brake switch connector, CA243 disconnected.

2 Measure the resistance between:

| CA265, harness side | Vehicle battery |
|---|---|
| Electric parking brake switch apply 1 - signal - Pin 10 | Positive terminal |

GETtheMANUALS.org

Is the resistance greater than 100 Kohms?

**Yes**

INSTALL a new EPB switch.
REFER to: Parking Brake Switch (206-05 Parking Brake and Actuation, Removal and Installation).

**No**

REPAIR the short circuit. For additional information, refer to the wiring diagrams.

**A9: CHECK IF THE SHORT CIRCUIT IS IN THE HARNESS OR THE SWITCH**

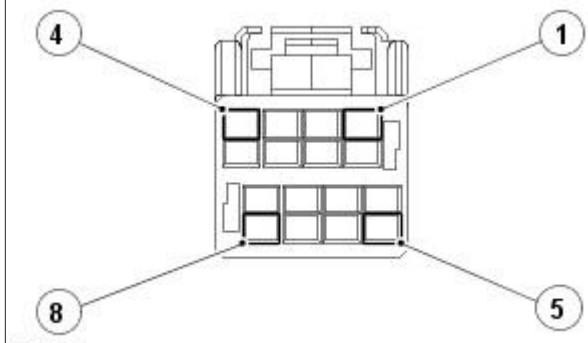

E55102

1 Electric parking brake switch connector, CA243 disconnected.

2 Measure the resistance between:

| CA265, harness side | Vehicle battery |
|---|---|
| Electric parking brake switch release 1 - signal - Pin 11 | Positive terminal |

Is the resistance greater than 100 Kohms?

**Yes**

INSTALL a new EPB switch.
REFER to: Parking Brake Switch (206-05 Parking Brake and Actuation, Removal and Installation).

**No**

REPAIR the short circuit. For additional information, refer to the wiring diagrams.

**A10: CHECK IF THE SHORT CIRCUIT IS IN THE HARNESS OR THE SWITCH**

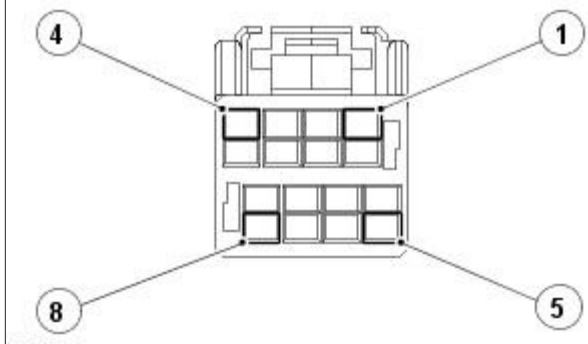

E55102

1 Electric parking brake switch connector, CA243 disconnected.

2 Measure the resistance between:

| CA266, harness side | Vehicle battery |
|---|---|
| Electric parking brake switch apply 2 - signal - Pin 02 | Positive terminal |

Is the resistance greater than 100 Kohms?

**Yes**

INSTALL a new EPB switch.
REFER to: Parking Brake Switch (206-05 Parking Brake and Actuation, Removal and Installation).

**No**

REPAIR the short circuit. For additional information, refer to the wiring diagrams.

**A11: CHECK IF THE SHORT CIRCUIT IS IN THE HARNESS OR THE SWITCH**

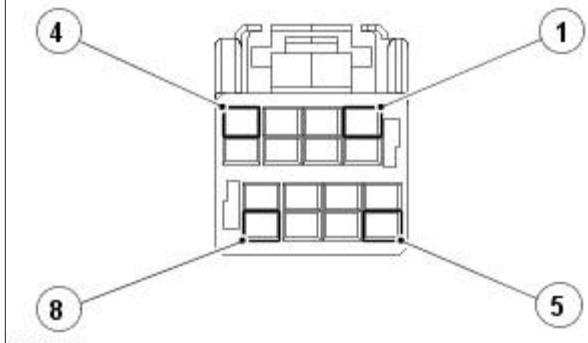

E55102

1 Electric parking brake switch connector, CA243 disconnected.

2 Measure the resistance between:

GETtheMANUAL.com

| CA266, harness side | Vehicle battery |
|---|---|
| Electric parking brake switch release 2 - signal - Pin 14 | Positive terminal |

| | |
|---|---|
| | Is the resistance greater than 100 Kohms?<br>**Yes**<br>INSTALL a new EPB switch.<br>REFER to: Parking Brake Switch (206-05 Parking Brake and Actuation, Removal and Installation).<br>**No**<br>REPAIR the short circuit. For additional information, refer to the wiring diagrams. |

| PINPOINT TEST B : SECONDARY APPLY SWITCH CIRCUIT VOLTAGE OUT OF RANGE | |
|---|---|
| **TEST CONDITIONS** | **DETAILS/RESULTS/ACTIONS** |
| **B1: CHECK THE SECONDARY SWITCH CIRCUIT RESISTANCE** | |
| | 1 Key off. |
| 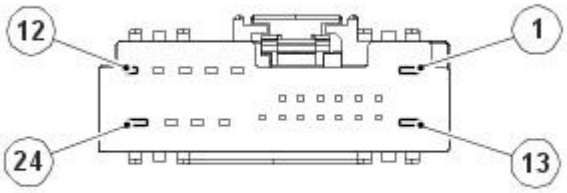 <br>E55104 | 2 Electric parking brake module connector 2, CA266 disconnected. |
| | 3 Key on, engine off. |
| | 4 Measure the resistance between:<br>**CA266, harness side**: Electric parking brake switch apply 2 - signal - Pin 02<br>**CA266, harness side**: Electric parking brake switch - switch return - Pin 06 |
| | Is the resistance between 595 ohms - 611 ohms?<br>**Yes**<br>An intermittent fault may be present in the wiring harness. Visually check for chaffed wires or other physical damage to the harness. If no fault is found in the circuit, suspect the following component(s):- EPB fault- EPB module connector CA266<br>**No**<br>INSTALL a new EPB switch.<br>REFER to: Parking Brake Switch (206-05 Parking Brake and Actuation, Removal and Installation). |

| PINPOINT TEST C : CLUTCH PEDAL POSITION SENSOR SHORT CIRCUIT TO GROUND OR OPEN CIRCUIT | |
|---|---|
| **TEST CONDITIONS** | **DETAILS/RESULTS/ACTIONS** |
| **C1: CHECK THE 5 VOLT SUPPLY CIRCUIT FOR SHORT CIRCUIT TO GROUND** | |
| | 1 Key off. |
| 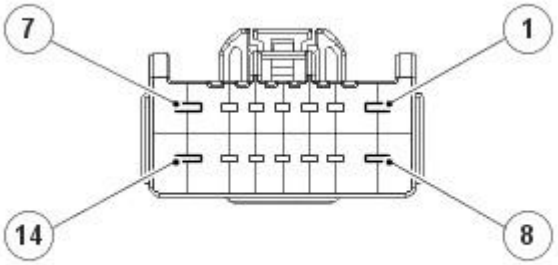 <br>E55103 | 2 Electric parking brake module connector 1, CA265 disconnected. |
| 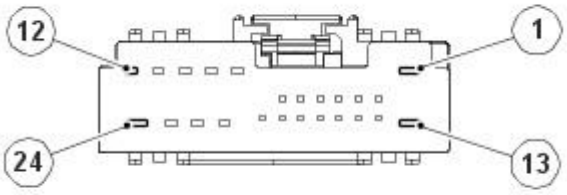 <br>E55104 | 3 Electric parking brake module connector 2, CA266 disconnected. |
| | 4 Key on, engine off. |

GETtheMANUALS.org

5 Measure the resistance between:

| CA265, harness side | Vehicle battery |
|---|---|
| Clutch position sensor - supply - Pin 05 | Negative terminal |

Is the resistance greater than 100 Kohms?

**Yes**

GO to C2.

**No**

GO to C6.

**C2: CHECK THE SIGNAL CIRCUIT FOR SHORT CIRCUIT TO GROUND**

1 Measure the resistance between:

| CA265, harness side | Vehicle battery |
|---|---|
| Clutch position sensor - signal - Pin 06 | Negative terminal |

Is the resistance greater than 100 Kohms?

**Yes**

GO to C3.

**No**

GO to C8.

**C3: CHECK THE SIGNAL CIRCUIT FOR OPEN CIRCUIT**

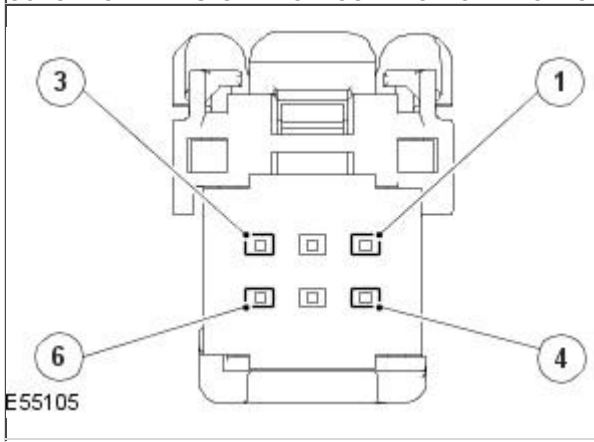


1 Clutch pedal position sensor (CLPS) connector, CA287 disconnected.

2 Measure the resistance between:

| CA265, harness side | CA287, harness side |
|---|---|
| Clutch position sensor - signal - Pin 06 | Clutch position sensor - signal - Pin 02 |

Is the resistance less than 10 ohms?

**Yes**

GO to C4.

**No**

REPAIR the open circuit. For additional information, refer to the wiring diagrams.

**C4: CHECK THE 5 VOLT SUPPLY CIRCUIT FOR OPEN CIRCUIT**

1 Measure the resistance between:

| CA265, harness side | CA287, harness side |
|---|---|
| Clutch position sensor - supply - Pin 05 | Clutch position sensor - supply - Pin 03 |

Is the resistance less than 10 ohms?

**Yes**

GO to C5.

**No**

REPAIR the open circuit. For additional information, refer to the wiring diagrams.

**C5: CHECK THE SENSOR RETURN CIRCUIT FOR OPEN CIRCUIT**

1 Measure the resistance between:

| CA266, harness side | CA287, harness side |
|---|---|
| Clutch position sensor - ground - Pin 03 | Clutch position sensor - ground - Pin 01 |

Is the resistance less than 10 ohms?

**Yes**

An intermittent fault may be present in the wiring harness. Visually check for chaffed wires or other physical damage to the harness. If no fault is found in the circuit, suspect the following component(s):- EPB module- CLPS- EPB module connector CA265- EPB module connector CA266- CLPS connector CA287

**No**

REPAIR the open circuit. For additional information, refer to the wiring diagrams.

**C6: CHECK IF THE SHORT CIRCUIT IS IN THE HARNESS OR THE SENSOR**

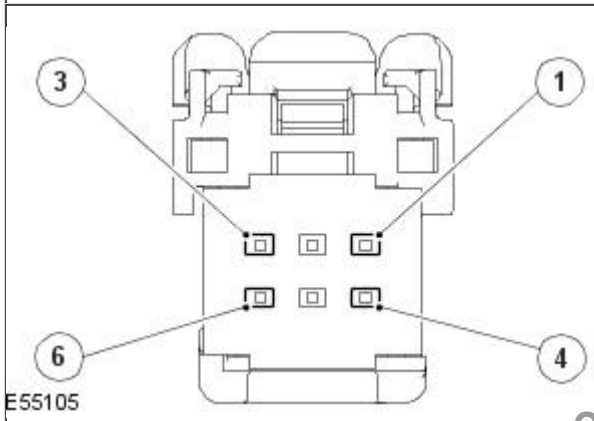


1 Clutch pedal position sensor (CLPS) connector, CA287 disconnected.

GETtheMANUALS.org

| | |
|---|---|
| | 2 Measure the resistance between: |

| CA265, harness side | Vehicle battery |
|---|---|
| Clutch position sensor - supply - Pin 05 | Negative terminal |

| | |
|---|---|
| | Is the resistance greater than 100 Kohms?<br>**Yes**<br>INSTALL a new CLPS.<br>**No**<br>GO to C7. |

**C7: CHECK IF THE SHORT CIRCUIT IS IN THE HARNESS OR THE SENSOR**

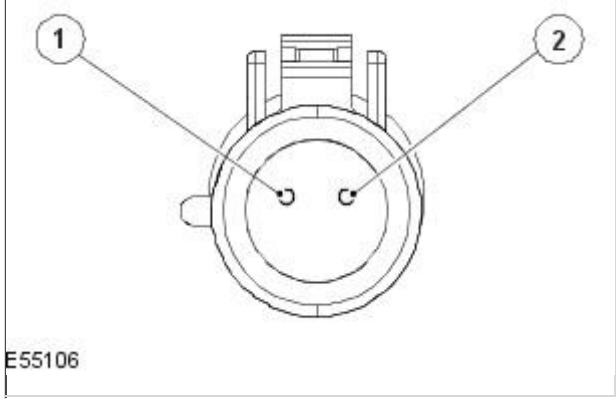


1 In-Gear (IG) Switch connector, GB03 disconnected (vehicles with petrol engine).

2 Measure the resistance between:

| CA265, harness side | Vehicle battery |
|---|---|
| Clutch position sensor - supply - Pin 05 | Negative terminal |

Is the resistance greater than 100 Kohms?

**Yes**

INSTALL a new In-gear switch.

**No**

REPAIR the short circuit. For additional information, refer to the wiring diagrams.

**C8: CHECK IF THE SHORT CIRCUIT IS IN THE HARNESS OR THE SENSOR**

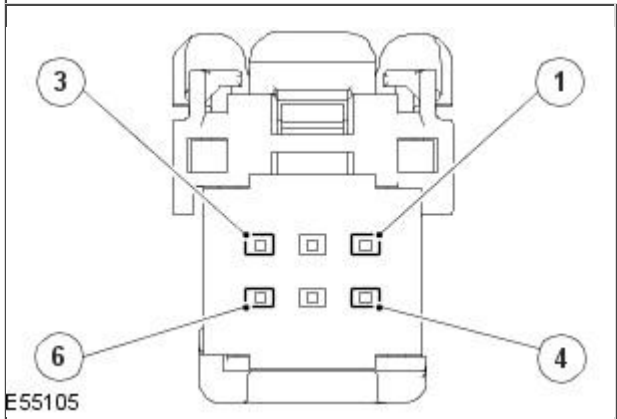


1 Clutch pedal position sensor (CLPS) connector, CA287 disconnected.

2 Measure the resistance between:

| CA265, harness side | Vehicle battery |
|---|---|
| Clutch position sensor - signal - Pin 06 | Negative terminal |

Is the resistance greater than 100 Kohms?

**Yes**

INSTALL a new CLPS.

**No**

REPAIR the short circuit. For additional information, refer to the wiring diagrams.

## PINPOINT TEST D : SECONDARY RELEASE SWITCH CIRCUIT VOLTAGE OUT OF RANGE

| TEST CONDITIONS | DETAILS/RESULTS/ACTIONS |
|---|---|

**D1: CHECK THE SECONDARY SWITCH CIRCUIT RESISTANCE**

1 Key off.

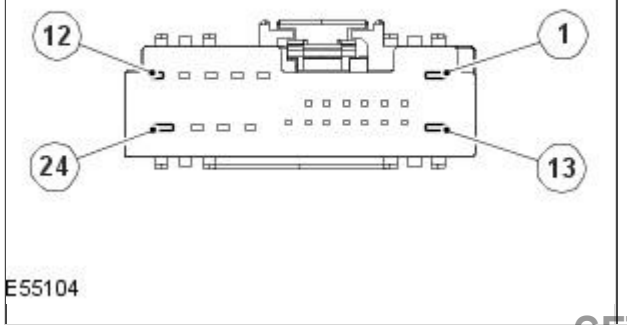


2 Electric parking brake module connector 2, CA266 disconnected.

GETtheMANUALS.org

3 Key on, engine off.

4 Measure the resistance between:

| CA266, harness side | CA266, harness side |
|---|---|
| Electric parking brake switch release 2 - signal - Pin 14 | Electric parking brake switch - switch return - Pin 06 |

Is the resistance between 595 ohms - 611 ohms?

**Yes**

An intermittent fault may be present in the wiring harness. Visually check for chaffed wires or other physical damage to the harness. If no fault is found in the circuit, suspect the following component(s):- EPB module- EPB module connector CA266

**No**

INSTALL a new EPB switch.
REFER to: Parking Brake Switch (206-05 Parking Brake and Actuation, Removal and Installation).

## PINPOINT TEST E : SECONDARY APPLY SWITCH CIRCUIT SHORT CIRCUIT TO GROUND

| TEST CONDITIONS | DETAILS/RESULTS/ACTIONS |
|---|---|

### E1: CHECK THE SECONDARY APPLY SIGNAL CIRCUIT FOR SHORT CIRCUIT TO GROUND

1 Key off.

2 Electric parking brake module connector 2, CA266 disconnected.

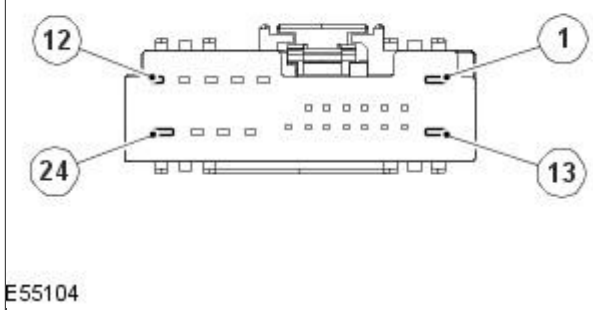


3 Key on, engine off.

4 Measure the resistance between:

| CA266, harness side | Vehicle battery |
|---|---|
| Electric parking brake switch apply 2 - signal - Pin 02 | Negative terminal |

Is the resistance greater than 100 Kohms?

**Yes**

An intermittent fault may be present in the wiring harness. Visually check for chaffed wires or other physical damage to the harness. If no fault is found in the circuit, suspect the following component(s):- EPB module- EPB module connector CA266

**No**

GO to E2.

### E2: CHECK IF THE SHORT CIRCUIT IS IN THE HARNESS OR THE SWITCH

1 Electric parking brake switch connector, CA243 disconnected.

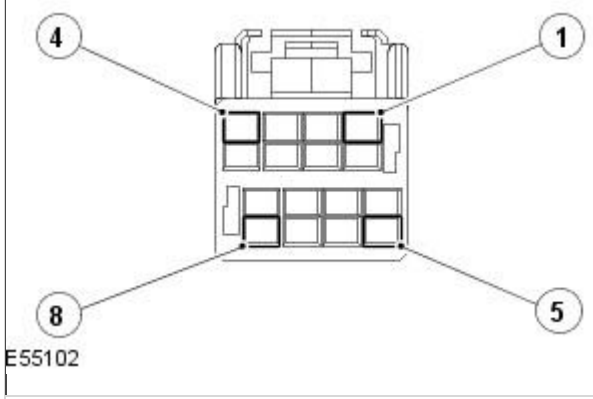


2 Measure the resistance between:

| CA266, harness side | Vehicle battery |
|---|---|
| Electric parking brake switch apply 2 - signal - Pin 02 | Negative terminal |

Is the resistance greater than 100 Kohms?

**Yes**

INSTALL a new EPB switch.
REFER to: Parking Brake Switch (206-05 Parking Brake and Actuation, Removal and Installation).

**No**

REPAIR the short circuit. For additional information, refer to the wiring diagrams.

## PINPOINT TEST F : CLUTCH PEDAL POSITION SENSOR SHORT CIRCUIT TO BATTERY

| TEST CONDITIONS | DETAILS/RESULTS/ACTIONS |
|---|---|

### F1: CHECK THE 5 VOLT SUPPLY CIRCUIT FOR SHORT CIRCUIT TO POWER

1 Key off.

GETtheMANUALS.org

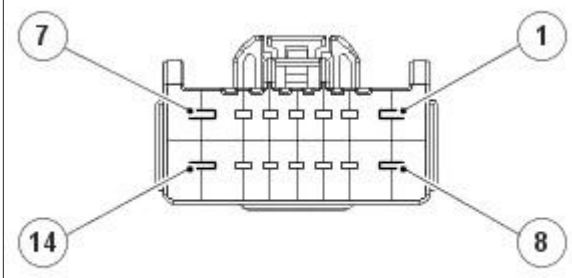

E55103

2 Electric parking brake module connector 1, CA265 disconnected.

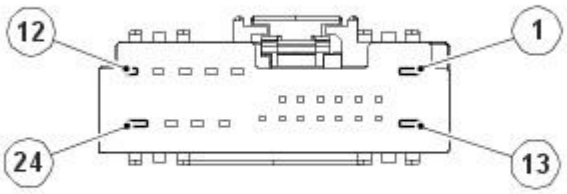

E55104

3 Electric parking brake module connector 2, CA266 disconnected.

4 Key on, engine off.

5 Measure the resistance between:

| CA265, harness side | Vehicle battery |
|---|---|
| Clutch position sensor - supply - Pin 05 | Positive terminal |

Is the resistance greater than 100 Kohms?

**Yes**

GO to F2.

**No**

GO to F4.

**F2: CHECK THE SIGNAL CIRCUIT FOR SHORT CIRCUIT TO POWER**

1 Measure the resistance between:

| CA265, harness side | Vehicle battery |
|---|---|
| Clutch position sensor - signal - Pin 06 | Positive terminal |

Is the resistance greater than 100 Kohms?

**Yes**

GO to F3.

**No**

GO to F5.

**F3: CHECK THE SENSOR RETURN GROUND CIRCUIT FOR SHORT CIRCUIT TO POWER**

1 Measure the resistance between:

| CA266, harness side | Vehicle battery |
|---|---|
| Clutch position sensor - ground - Pin 03 | Positive terminal |

Is the resistance greater than 100 Kohms?

**Yes**

An intermittent fault may be present in the wiring harness. Visually check for chaffed wires or other physical damage to the harness. If no fault is found in the circuit, suspect the following component(s):- EPB module- EPB module connector CA265- EPB module connector CA266

**No**

GO to F6.

**F4: CHECK IF THE SHORT CIRCUIT IS IN THE HARNESS OR THE SENSOR**

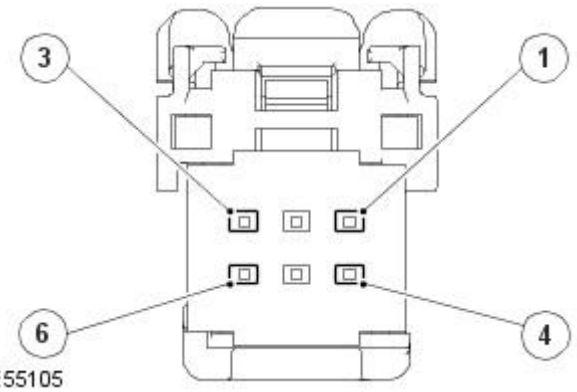

E55105

1 Clutch pedal position sensor (CLPS) connector, CA287 disconnected.

2 Measure the resistance between:

| CA265, harness side | Vehicle battery |
|---|---|
| Clutch position sensor - supply - Pin 05 | Positive terminal |

GETtheMANUALS.org

Is the resistance greater than 100 Kohms?

**Yes**

INSTALL a new CLPS.

**No**

GO to F7.

**F5: CHECK IF THE SHORT CIRCUIT IS IN THE HARNESS OR THE SENSOR**

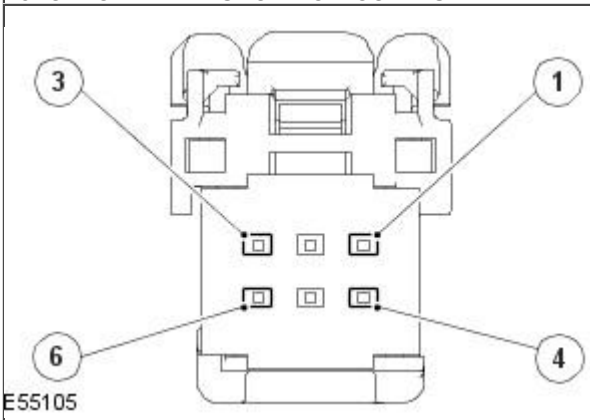


1 Clutch pedal position sensor (CLPS) connector, CA287 disconnected.

2 Measure the resistance between:

| CA265, harness side | Vehicle battery |
|---|---|
| Clutch position sensor - signal - Pin 06 | Positive terminal |

Is the resistance greater than 100 Kohms?

**Yes**

INSTALL a new CLPS.

**No**

REPAIR the short circuit. For additional information, refer to the wiring diagrams.

**F6: CHECK IF THE SHORT CIRCUIT IS IN THE HARNESS OR THE SENSOR**

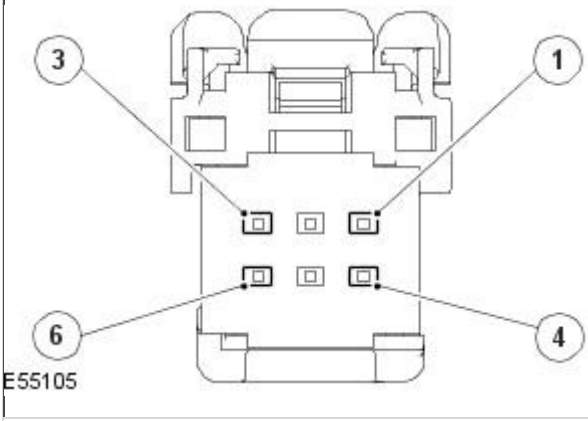


1 Clutch pedal position sensor (CLPS) connector, CA287 disconnected.

2 Measure the resistance between:

| CA266, harness side | Vehicle battery |
|---|---|
| Clutch position sensor - ground - Pin 03 | Positive terminal |

Is the resistance greater than 100 Kohms?

**Yes**

INSTALL a new CLPS.

**No**

REPAIR the short circuit. For additional information, refer to the wiring diagrams.

**F7: CHECK IF THE SHORT CIRCUIT IS IN THE HARNESS OR THE SWITCH**

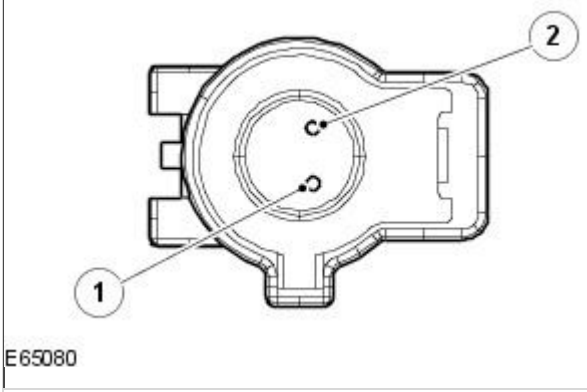


1 In-Gear (IG) switch connector, GB04 disconnected (vehicles with diesel engine).

2 Measure the resistance between:

| CA266, harness side | Vehicle battery |
|---|---|
| Clutch position sensor - supply - Pin 05 | Positive terminal |

Is the resistance greater than 100 Kohms?

**Yes**

INSTALL a new in-gear switch.

**No**

REPAIR the short circuit. For additional information, refer to the wiring diagrams.

GETtheMANUALS.org

## PINPOINT TEST G : SECONDARY APPLY HARNESS SHORT CIRCUIT TO BATTERY OR OPEN CIRCUIT

| TEST CONDITIONS | DETAILS/RESULTS/ACTIONS |
|---|---|
| **G1: CHECK THE PRIMARY APPLY SIGNAL CIRCUIT FOR SHORT CIRCUIT TO POWER** | |
| | 1 Key off. |
| 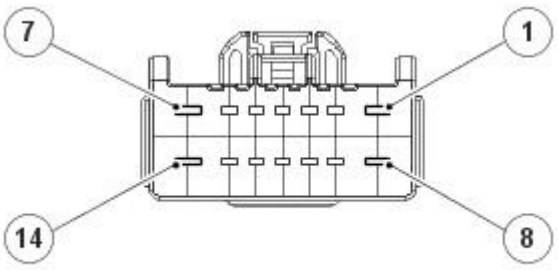 <br>E55103 | 2 Electric parking brake module connector 1, CA265 disconnected. |
| 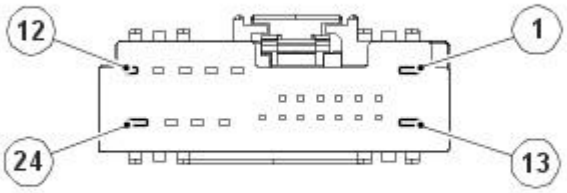 <br>E55104 | 3 Electric parking brake module connector 2, CA266 disconnected. |
| | 4 Key on, engine off.<br>5 Measure the resistance between:<br>**CA265, harness side** — **Vehicle battery**<br>Electric parking brake switch apply 1 - signal - Pin 10 — Positive terminal |
| | Is the resistance greater than 100 Kohms?<br>**Yes**<br>GO to G2.<br>**No**<br>GO to G8. |
| **G2: CHECK THE PRIMARY RELEASE SIGNAL CIRCUIT FOR SHORT CIRCUIT TO POWER** | |
| | 1 Measure the resistance between:<br>**CA265, harness side** — **Vehicle battery**<br>Electric parking brake switch release 1 - signal - Pin 11 — Positive terminal |
| | Is the resistance greater than 100 Kohms?<br>**Yes**<br>GO to G3.<br>**No**<br>GO to G9. |
| **G3: CHECK THE SECONDARY APPLY SIGNAL CIRCUIT FOR SHORT CIRCUIT TO POWER** | |
| | 1 Measure the resistance between:<br>**CA266, harness side** — **Vehicle battery**<br>Electric parking brake switch apply 2 - signal - Pin 02 — Positive terminal |
| | Is the resistance greater than 100 Kohms?<br>**Yes**<br>GO to G4.<br>**No**<br>GO to G10. |
| **G4: CHECK THE SECONDARY RELEASE SIGNAL CIRCUIT FOR SHORT CIRCUIT TO POWER** | |
| | 1 Measure the resistance between:<br>**CA266, harness side** — **Vehicle battery**<br>Electric parking brake switch release 2 - signal - Pin 14 — Positive terminal |
| | Is the resistance greater than 100 Kohms?<br>**Yes**<br>GO to G5.<br>**No**<br>GO to G11. |
| **G5: CHECK THE SECONDARY APPLY SIGNAL CIRCUIT FOR OPEN CIRCUIT** | |

GETtheMANUALS.org

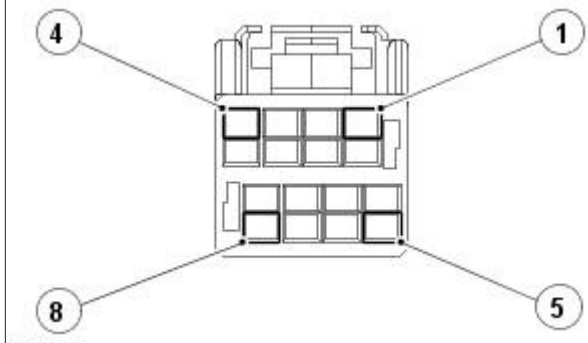

E55102

1 Electric parking brake switch, CA243 connector disconnected.

2 Measure the resistance between:

| CA266, harness side | CA243, harness side |
|---|---|
| Electric parking brake switch apply 2 - signal - Pin 02 | Electric parking brake switch apply 2 - signal - Pin 07 |

Is the resistance less than 10 ohms?

**Yes**

GO to G6.

**No**

REPAIR the open circuit. For additional information, refer to the wiring diagrams.

**G6: CHECK THE SWITCH RETURN SIGNAL CIRCUIT FOR OPEN CIRCUIT**

1 Measure the resistance between:

| CA266, harness side | CA243, harness side |
|---|---|
| Electric parking brake switch - switch return - Pin 06 | Electric parking brake switch - switch return - Pin 06 |

Is the resistance less than 10 ohms?

**Yes**

GO to G7.

**No**

REPAIR the open circuit. For additional information, refer to the wiring diagrams.

**G7: CHECK THE ELECTRIC PARKING BRAKE SWITCH**

1 Measure the resistance between:

| CA243, component side | CA243, component side |
|---|---|
| Electric parking brake switch apply 2 - signal - Pin 07 | Electric parking brake switch - switch return - Pin 06 |

Is the resistance between 595 ohms - 611 ohms?

**Yes**

An intermittent fault may be present in the wiring harness. Visually check for chaffed wires or other physical damage to the harness. If no fault is found in the circuit, suspect the following component(s):- EPB module- EPB module connector CA265- EPB module connector CA266

**No**

INSTALL a new EPB switch.
REFER to: Parking Brake Switch (206-05 Parking Brake and Actuation, Removal and Installation).

**G8: CHECK IF THE SHORT CIRCUIT IS IN THE HARNESS OR THE SWITCH**

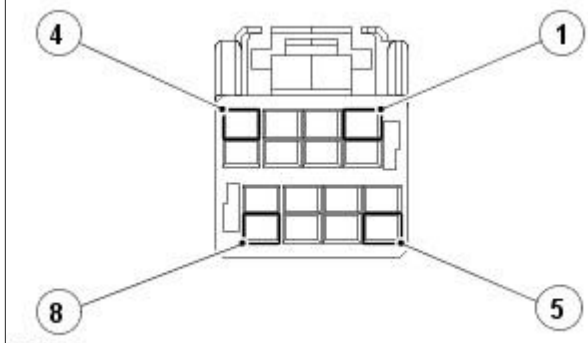

E55102

1 Electric parking brake switch, CA243 connector disconnected.

2 Measure the resistance between:

| CA265, harness side | Vehicle battery |
|---|---|
| Electric parking brake switch apply 1 - signal - Pin 10 | Positive terminal |

Is the resistance greater than 100 Kohms?

**Yes**

INSTALL a new EPB switch.
REFER to: Parking Brake Switch (206-05 Parking Brake and Actuation, Removal and Installation).

**No**

REPAIR the short circuit. For additional information, refer to the wiring diagrams.

**G9: CHECK IF THE SHORT CIRCUIT IS IN THE HARNESS OR THE SWITCH**

GETtheMANUALS.org

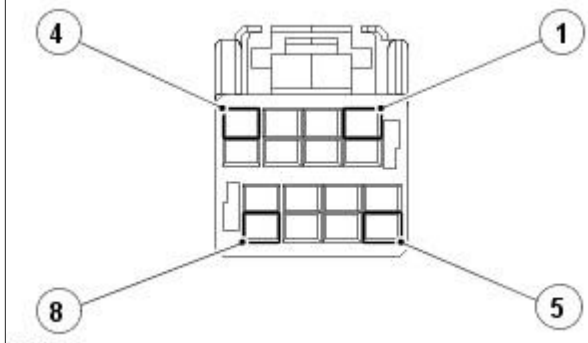

E55102

1 Electric parking brake switch, CA243 connector disconnected.

2 Measure the resistance between:

| CA265, harness side | Vehicle battery |
|---|---|
| Electric parking brake switch release 1 - signal - Pin 11 | Positive terminal |

Is the resistance greater than 100 Kohms?

**Yes**

INSTALL a new EPB switch.
REFER to: Parking Brake Switch (206-05 Parking Brake and Actuation, Removal and Installation).

**No**

REPAIR the short circuit. For additional information, refer to the wiring diagrams.

**G10: CHECK IF THE SHORT CIRCUIT IS IN THE HARNESS OR THE SWITCH**

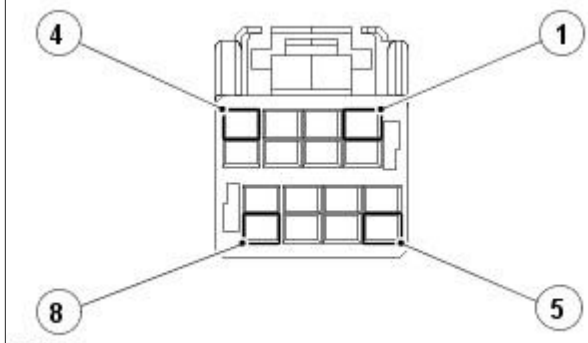

E55102

1 Electric parking brake switch, CA243 connector disconnected.

2 Measure the resistance between:

| CA266, harness side | Vehicle battery |
|---|---|
| Electric parking brake switch apply 2 - signal - Pin 02 | Positive terminal |

Is the resistance greater than 100 Kohms?

**Yes**

INSTALL a new EPB switch.
REFER to: Parking Brake Switch (206-05 Parking Brake and Actuation, Removal and Installation).

**No**

REPAIR the short circuit. For additional information, refer to the wiring diagrams.

**G11: CHECK IF THE SHORT CIRCUIT IS IN THE HARNESS OR THE SWITCH**

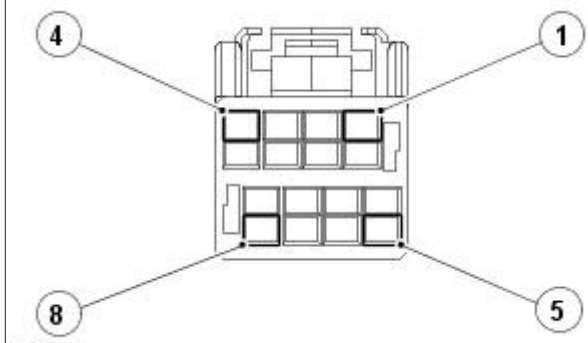

E55102

1 Electric parking brake switch, CA243 connector disconnected.

2 Measure the resistance between:

| CA266, harness side | Vehicle battery |
|---|---|
| Electric parking brake switch release 2 - signal - Pin 14 | Positive terminal |

Is the resistance greater than 100 Kohms?

**Yes**

INSTALL a new EPB switch.
REFER to: Parking Brake Switch (206-05 Parking Brake and Actuation, Removal and Installation).

**No**

REPAIR the short circuit. For additional information, refer to the wiring diagrams.

GETtheMANUALS.org

## PINPOINT TEST H : PRIMARY RELEASE SWITCH CIRCUIT OUT OF RANGE

| TEST CONDITIONS | DETAILS/RESULTS/ACTIONS |
|---|---|
| **H1: CHECK THE PRIMARY RELEASE SWITCH CIRCUIT RESISTANCE** | |
| | 1 Key off. |
| 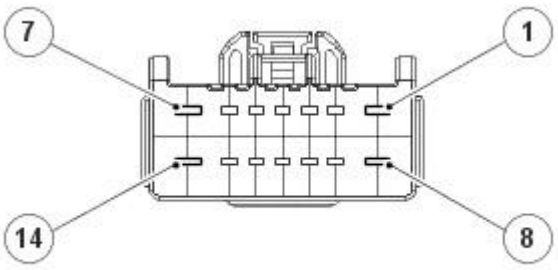 <br>E55103 | 2 Electric parking brake module connector 1, CA265 disconnected. |
| 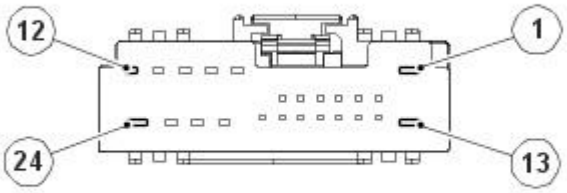 <br>E55104 | 3 Electric parking brake module connector 2, CA266 disconnected. |
| | 4 Key on, engine off. |
| | 5 Measure the resistance between:<br>**CA265, harness side**: Electric parking brake switch release 1 - signal - Pin 11<br>**CA266, harness side**: Electric parking brake switch - switch return - Pin 06 |
| | Is the resistance between 595 ohms - 611 ohms?<br>**Yes**<br>An intermittent fault may be present in the wiring harness. Visually check for chaffed wires or other physical damage to the harness. If no fault is found in the circuit, suspect the following component(s):- EPB module- EPB module connector CA265<br>**No**<br>INSTALL a new EPB switch.<br>REFER to: Parking Brake Switch (206-05 Parking Brake and Actuation, Removal and Installation). |

## PINPOINT TEST I : PRIMARY APPLY SWITCH CIRCUIT OUT OF RANGE

| TEST CONDITIONS | DETAILS/RESULTS/ACTIONS |
|---|---|
| **I1: CHECK THE PRIMARY APPLY SWITCH CIRCUIT RESISTANCE** | |
| | 1 Key off. |
| 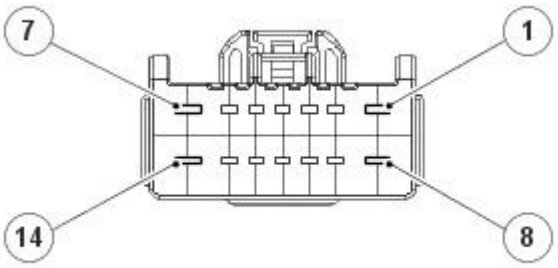 <br>E55103 | 2 Electric parking brake module connector 1, CA265 disconnected. |

GETtheMANUALS.org

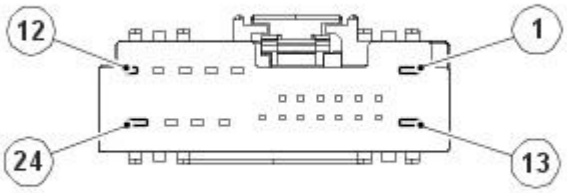

E55104

3 Electric parking brake module connector 2, CA266 disconnected.

4 Key on, engine off.

5 Measure the resistance between:

| CA265, harness side | CA266, harness side |
|---|---|
| Electric parking brake switch apply 1 - signal - Pin 10 | Electric parking brake switch - switch return - Pin 06 |

Is the resistance between 595 ohms - 611 ohms?

**Yes**

An intermittent fault may be present in the wiring harness. Visually check for chaffed wires or other physical damage to the harness. If no fault is found in the circuit, suspect the following component(s):- EPB module- EPB module connector CA265

**No**

INSTALL a new EPB switch.
REFER to: Parking Brake Switch (206-05 Parking Brake and Actuation, Removal and Installation).

## PINPOINT TEST J : PRIMARY APPLY SWITCH CIRCUIT SHORT CIRCUIT TO GROUND

| TEST CONDITIONS | DETAILS/RESULTS/ACTIONS |
|---|---|

### J1: CHECK THE PRIMARY APPLY SIGNAL CIRCUIT FOR SHORT CIRCUIT TO GROUND

1 Key off.

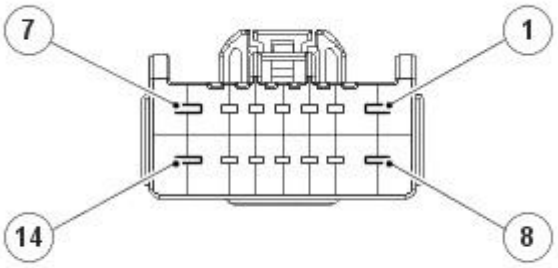

E55103

2 Electric parking brake module connector 1, CA265 disconnected.

3 Key on, engine off.

4 Measure the resistance between:

| CA265, harness side | Vehicle battery |
|---|---|
| Electric parking brake switch apply 1 - signal - Pin 10 | Negative terminal |

Is the resistance greater than 100 Kohms?

**Yes**

An intermittent fault may be present in the wiring harness. Visually check for chaffed wires or other physical damage to the harness. If no fault is found in the circuit, suspect the following component(s):- EPB module- EPB module connector CA265

**No**

GO to J2.

### J2: CHECK IF THE SHORT CIRCUIT IS IN THE HARNESS OR THE SWITCH

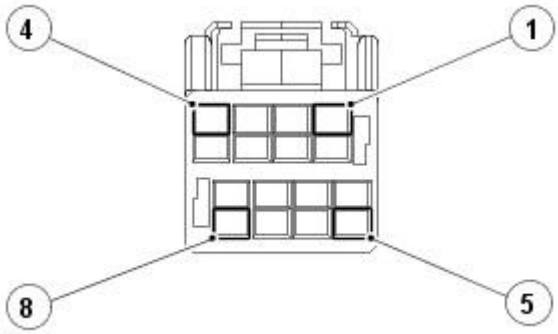

E55102

1 Electric parking brake switch connector, CA243 disconnected.

GETtheMANUALS.org

| | |
|---|---|
| | 2 Measure the resistance between: |

| CA265, harness side | Vehicle battery |
|---|---|
| Electric parking brake switch apply 1 - signal - Pin 10 | Negative terminal |

| | |
|---|---|
| | Is the resistance greater than 100 Kohms?<br>**Yes**<br>INSTALL a new EPB switch.<br>REFER to: Parking Brake Switch (206-05 Parking Brake and Actuation, Removal and Installation).<br>**No**<br>REPAIR the short circuit. For additional information, refer to the wiring diagrams. |

## PINPOINT TEST K : HIGH POWER BATTERY FEED CIRCUIT SHORT CIRCUIT TO GROUND OR OPEN CIRCUIT

| TEST CONDITIONS | DETAILS/RESULTS/ACTIONS |
|---|---|
| **K1: CHECK THE HIGH POWER SUPPLY CIRCUIT** | |
| 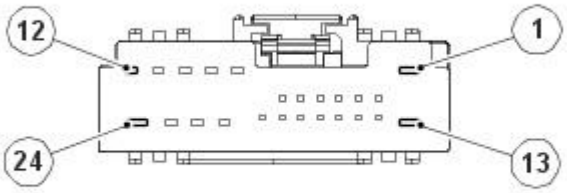 <br>E55104 | 1 Electric parking brake module connector 2, CA266 disconnected. |
| | 2 Measure the voltage between: |

| CA266, harness side | Vehicle battery |
|---|---|
| Electric parking brake module - battery supply - Pin 01 | Negative terminal |

| | |
|---|---|
| | Is the voltage between 9 volts - 15 volts?<br>**Yes**<br>An intermittent fault may be present in the wiring harness. Visually check for chaffed wires or other physical damage to the harness. If no fault is found in the circuit, suspect the following component(s):- EPB module<br>**No**<br>No supply to the EPB circuit. check and repair the circuit as necessary. For additional information, refer to the wiring diagrams. |

## PINPOINT TEST L : PRIMARY RELEASE SWITCH CIRCUIT SHORT CIRCUIT TO GROUND

| TEST CONDITIONS | DETAILS/RESULTS/ACTIONS |
|---|---|
| **L1: CHECK THE PRIMARY RELEASE SIGNAL CIRCUIT FOR SHORT CIRCUIT TO GROUND** | |
| | 1 Key off. |
| 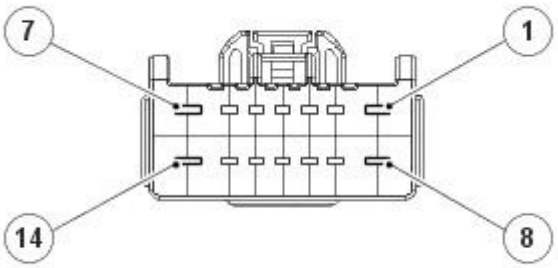 <br>E55103 | 2 Electric parking brake module connector 1, CA265 disconnected. |
| | 3 Key on, engine off. |
| | 4 Measure the resistance between: |

| CA265, harness side | Vehicle battery |
|---|---|
| Electric parking brake switch release 1 - signal - Pin 11 | Negative terminal |

| | |
|---|---|
| | Is the resistance greater than 100 Kohms?<br>**Yes**<br>An intermittent fault may be present in the wiring harness. Visually check for chaffed wires or other physical damage to the harness. If no fault is found in the circuit, suspect the following component(s):- EPB module- EPB module connector CA265<br>**No**<br>GO to L2. |
| **L2: CHECK IF THE SHORT CIRCUIT IS IN THE HARNESS OR THE SWITCH** | |

GETtheMANUALS.org

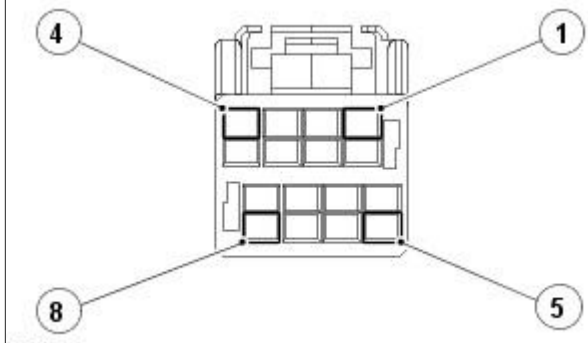

E55102

1 Electric parking brake switch connector, CA243 disconnected.

2 Measure the resistance between:

| CA265, harness side | Vehicle battery |
|---|---|
| Electric parking brake switch release 1 - signal - Pin 11 | Negative terminal |

Is the resistance greater than 100 Kohms?

**Yes**

INSTALL a new EPB switch.
REFER to: Parking Brake Switch (206-05 Parking Brake and Actuation, Removal and Installation).

**No**

REPAIR the short circuit. For additional information, refer to the wiring diagrams.

## PINPOINT TEST M : ACTUATOR OUTPUT SHORT CIRCUIT TO GROUND

| TEST CONDITIONS | DETAILS/RESULTS/ACTIONS |
|---|---|

### M1: CHECK THE ACTUATOR NEGATIVE SIGNAL CIRCUIT FOR SHORT CIRCUIT TO GROUND

1 Key off.

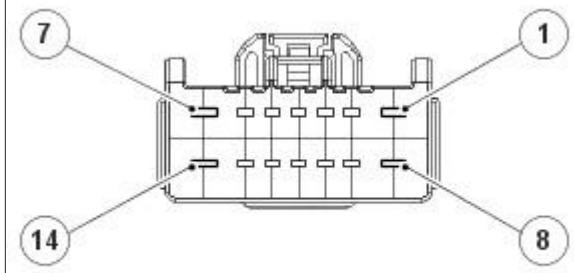

E55103

2 Electric parking brake switch connector, CA243 disconnected.

3 Key on, engine off.

4 Measure the resistance between:

| CA265, harness side | Vehicle battery |
|---|---|
| Electric parking brake actuator - negative - Pin 07 | Negative terminal |

Is the resistance greater than 100 Kohms?

**Yes**

GO to M2.

**No**

GO to M3.

### M2: CHECK THE ACTUATOR POSITIVE SIGNAL CIRCUIT FOR SHORT CIRCUIT TO GROUND

1 Measure the resistance between:

| CA265, harness side | Vehicle battery |
|---|---|
| Electric parking brake actuator - positive - Pin 14 | Negative terminal |

Is the resistance greater than 100 Kohms?

**Yes**

An intermittent fault may be present in the wiring harness. Visually check for chaffed wires or other physical damage to the harness. If no fault is found in the circuit, suspect the following component(s):- EPB module- EPB module connector CA265

**No**

GO to M4.

### M3: CHECK IF THE SHORT CIRCUIT IS IN THE HARNESS OR THE ACTUATOR

GETtheMANUALS.org

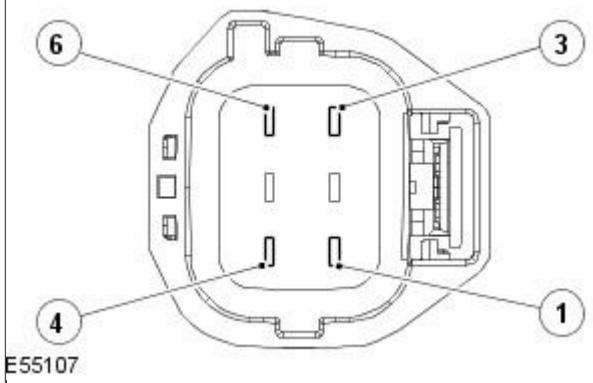


1 EPB actuator connector, CA269 disconnected.

2 Measure the resistance between:

| CA265, harness side | Vehicle battery |
|---|---|
| Electric parking brake actuator - negative - Pin 07 | Negative terminal |

Is the resistance greater than 100 Kohms?

**Yes**

INSTALL a new EPB actuator.
REFER to: Parking Brake Release Actuator (206-05 Parking Brake and Actuation, Removal and Installation).

**No**

REPAIR the short circuit. For additional information, refer to the wiring diagrams.

**M4: CHECK IF THE SHORT CIRCUIT IS IN THE HARNESS OR THE ACTUATOR**

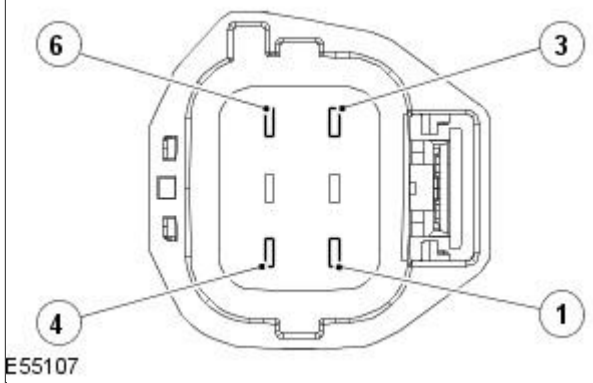


1 EPB actuator connector, CA269 disconnected.

2 Measure the resistance between:

| CA265, harness side | Vehicle battery |
|---|---|
| Electric parking brake actuator - positive - Pin 14 | Negative terminal |

Is the resistance greater than 100 Kohms?

**Yes**

INSTALL a new EPB actuator.
REFER to: Parking Brake Release Actuator (206-05 Parking Brake and Actuation, Removal and Installation).

**No**

REPAIR the short circuit. For additional information, refer to the wiring diagrams.

## PINPOINT TEST N : GEAR SHIFT POSITION FAULT, GENERAL ELECTRICAL FAILURE (VEHICLES WITH PETROL ENGINE ONLY)

| TEST CONDITIONS | DETAILS/RESULTS/ACTIONS |
|---|---|

**N1: CHECK THE SIGNAL CIRCUIT FOR SHORT CIRCUIT TO POWER**

1 Key off.

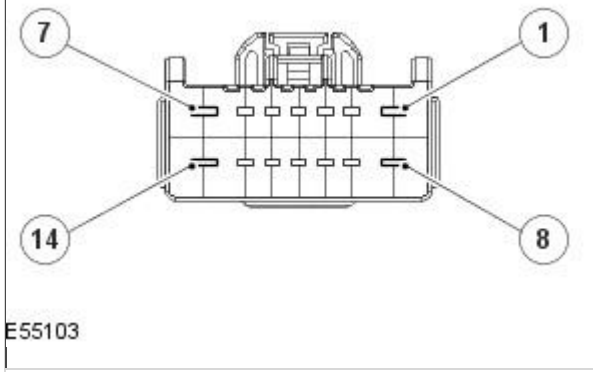


2 Electric parking brake module connector 1 connector, CA265 disconnected.

3 Key on, engine off.

4 Measure the resistance between:

| CA265, harness side | Vehicle battery |
|---|---|
| In-gear switch - signal - Pin 03 | Positive terminal |

GETtheMANUALS.org

Is the resistance greater than 100 Kohms?

**Yes**

GO to N2.

**No**

GO to N3.

**N2: CHECK THE IN-GEAR SWITCH CIRCUIT RESISTANCE**

1. Make sure the vehicle is in NEUTRAL.
2. Key off.
3. Electric parking brake module connector 2 connector, CA266 disconnected.

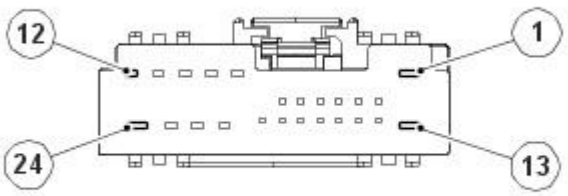


E55104

4. Measure the resistance between:

| CA265, harness side | CA266, harness side |
|---|---|
| In-gear switch - signal - Pin 03 | In-gear switch - return - Pin 15 |

Is the resistance between 580 ohms - 630 ohms?

**Yes**

An intermittent fault may be present in the wiring harness. Visually check for chaffed wires or other physical damage to the harness. If no fault is found in the circuit, suspect the following component(s):- EPB module- EPB module connector CA265- EPB module connector CA266

**No**

GO to N6.

**N3: CHECK IF THE SHORT CIRCUIT IS IN THE HARNESS OR THE SWITCH**

1. In-Gear (IG) switch connector, GB03 disconnected.

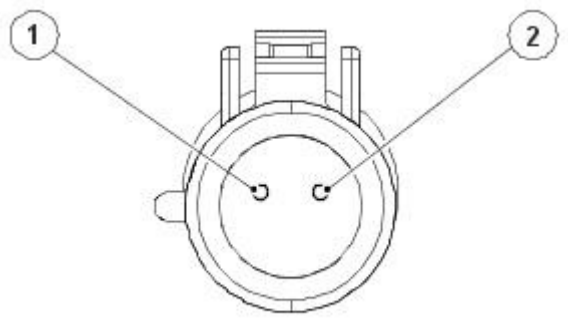


E55106

2. Measure the resistance between:

| CA265, harness side | Vehicle battery |
|---|---|
| In-gear switch - signal - Pin 03 | Positive terminal |

Is the resistance greater than 100 Kohms?

**Yes**

GO to N4.

**No**

REPAIR the short circuit. For additional information, refer to the wiring diagrams.

**N4: CHECK IF THE SHORT CIRCUIT IS IN THE HARNESS OR THE SWITCH**

1. Measure the resistance between:

| IG Switch, harness side | Vehicle battery |
|---|---|
| In-gear switch - return - Pin 01 | Positive terminal |

Is the resistance greater than 100 Kohms?

**Yes**

INSTALL a new in-gear switch.

**No**

GO to N5.

**N5: CHECK IF THE SHORT CIRCUIT IS IN THE HARNESS OR THE CONTROL MODULE**

1. Key off.

GETtheMANUALS.org

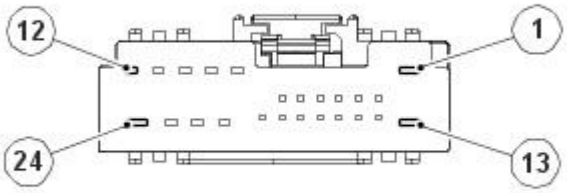

E55104

2 Electric parking brake module connector 2, CA266 disconnected.

3 Key on, engine off.

4 Measure the resistance between:

| IG Switch, harness side | Vehicle battery |
|---|---|
| In-gear switch - return - Pin 01 | Positive terminal |

Is the resistance greater than 100 Kohms?

**Yes**

INSTALL a new EPB module.
REFER to: Parking Brake Module (206-05 Parking Brake and Actuation, Removal and Installation).

**No**

REPAIR the short circuit. For additional information, refer to the wiring diagrams.

**N6: CHECK THE SIGNAL CIRCUIT FOR OPEN CIRCUIT**

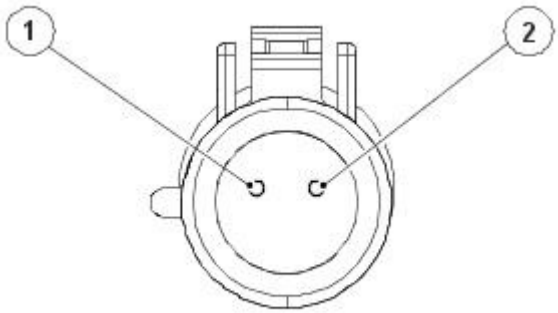

E55106

1 In-gear (IG) switch connector, GB03 disconnected.

2 Measure the resistance between:

| CA265, harness side | IG Switch, harness side |
|---|---|
| In-gear switch - signal - Pin 03 | In-gear switch - signal - Pin 02 |

Is the resistance less than 10 ohms?

**Yes**

GO to N7.

**No**

REPAIR the open circuit. For additional information, refer to the wiring diagrams.

**N7: CHECK THE SENSOR RETURN CIRCUIT FOR OPEN CIRCUIT**

1 Measure the resistance between:

| CA265, harness side | IG Switch, harness side |
|---|---|
| In-gear switch - return - Pin 15 | In-gear switch - return - Pin 01 |

Is the resistance less than 10 ohms?

**Yes**

GO to N8.

**No**

REPAIR the open circuit. For additional information, refer to the wiring diagrams.

**N8: CHECK THE IG SWITCH CIRCUIT RESISTANCE**

1 Measure the resistance between:

| IG Switch, component side | IG Switch, component side |
|---|---|
| In-gear switch - return - Pin 01 | In-gear switch - signal - Pin 02 |

Is the resistance between 580 ohms - 630 ohms?

**Yes**

REPAIR the open circuit. For additional information, refer to the wiring diagrams.

**No**

INSTALL a new in-gear switch.

**PINPOINT TEST O : HIGH POWER GROUND FEED OPEN CIRCUIT**

| TEST CONDITIONS | DETAILS/RESULTS/ACTIONS |
|---|---|

**O1: CHECK THE MODULE GROUND CIRCUIT FOR CONTINUITY**

GETtheMANUALS.org

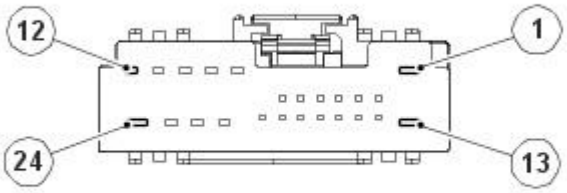

E55104

1 Electric parking brake module connector 2, CA266 disconnected.

2 Measure the resistance between:

| CA266, harness side | Vehicle battery |
|---|---|
| Electric parking brake module - ground - Pin 13 | Negative terminal |

Is the resistance less than 10 ohms?

**Yes**

An intermittent fault may be present in the wiring harness. Visually check for chaffed wires or other physical damage to the harness. If no fault is found in the circuit, suspect the following component(s):EPB Module

**No**

REPAIR the open circuit. For additional information, refer to the wiring diagrams.

## PINPOINT TEST P : ACTUATOR OUTPUT SHORT CIRCUIT TO BATTERY

| TEST CONDITIONS | DETAILS/RESULTS/ACTIONS |
|---|---|

### P1: CHECK THE ACTUATOR NEGATIVE SIGNAL CIRCUIT FOR SHORT CIRCUIT TO POWER

1 Key off.

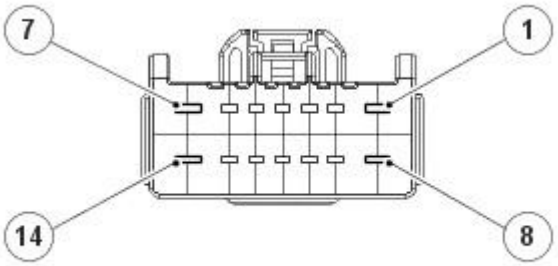

E55103

2 Electric parking brake module connector 1, CA265 disconnected.

3 Key on, engine off.

4 Measure the resistance between:

| CA265, harness side | Vehicle battery |
|---|---|
| Electric parking brake actuator - negative - Pin 07 | Positive terminal |

Is the resistance greater than 100 Kohms?

**Yes**

GO to P2.

**No**

GO to P3.

### P2: CHECK THE ACTUATOR POSITIVE SIGNAL CIRCUIT FOR SHORT CIRCUIT TO POWER

1 Measure the resistance between:

| CA265, harness side | Vehicle battery |
|---|---|
| Electric parking brake actuator - positive - Pin 14 | Positive terminal |

Is the resistance greater than 100 Kohms?

**Yes**

An intermittent fault may be present in the wiring harness. Visually check for chaffed wires or other physical damage to the harness. If no fault is found in the circuit, suspect the following component(s):- EPB module- EPB module connector CA265

**No**

GO to P4.

### P3: CHECK IF THE SHORT CIRCUIT IS IN THE HARNESS OR THE ACTUATOR

GETtheMANUALS.org

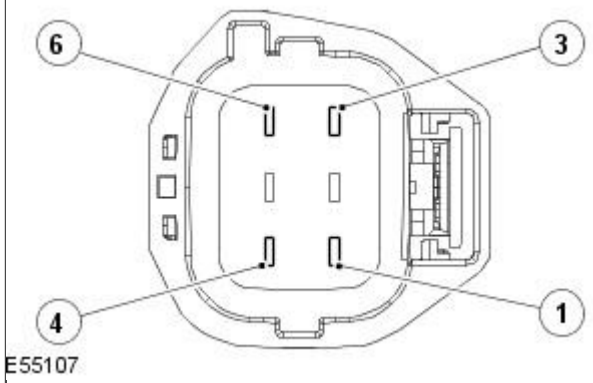


1 EPB actuator connector, CA269 disconnected.

2 Measure the resistance between:

| CA265, harness side | Vehicle battery |
|---|---|
| Electric parking brake actuator - negative - Pin 07 | Positive terminal |

Is the resistance greater than 100 Kohms?

**Yes**

INSTALL a new EPB actuator.
REFER to: Parking Brake Release Actuator (206-05 Parking Brake and Actuation, Removal and Installation).

**No**

REPAIR the short circuit. For additional information, refer to the wiring diagrams.

**P4: CHECK IF THE SHORT CIRCUIT IS IN THE HARNESS OR THE ACTUATOR**

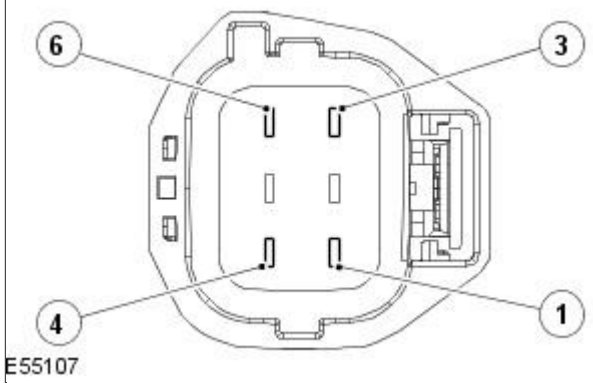


1 EPB actuator connector, CA269 disconnected.

2 Measure the resistance between:

| CA265, harness side | Vehicle battery |
|---|---|
| Electric parking brake actuator - positive - Pin 14 | Positive terminal |

Is the resistance greater than 100 Kohms?

**Yes**

INSTALL a new EPB actuator.
REFER to: Parking Brake Release Actuator (206-05 Parking Brake and Actuation, Removal and Installation).

**No**

REPAIR the short circuit. For additional information, refer to the wiring diagrams.

## PINPOINT TEST Q : ACTUATOR HALL EFFECT SENSOR CIRCUIT FAILURE

| TEST CONDITIONS | DETAILS/RESULTS/ACTIONS |
|---|---|

**Q1: CHECK THE HALL EFFECT 5 VOLT SUPPLY CIRCUIT FOR SHORT CIRCUIT TO GROUND**

1 Key off.

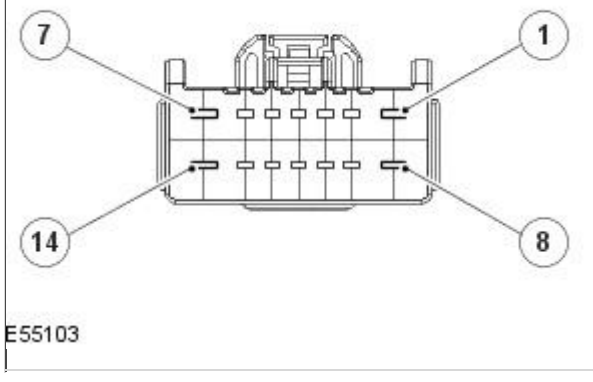


2 Electric parking brake module connector 1, CA265 disconnected.

GETtheMANUALS.org

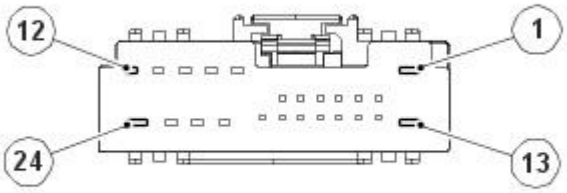

E55104

3 Electric parking brake module connector 2, CA266 disconnected.

4 Key on, engine off.

5 Measure the resistance between:

| CA265, harness side | Vehicle battery |
|---|---|
| Electric parking brake hall effect - signal - Pin 12 | Negative terminal |

Is the resistance greater than 100 Kohms?

**Yes**

GO to Q2.

**No**

GO to Q9.

**Q2: CHECK THE HALL EFFECT 5 VOLT SUPPLY CIRCUIT FOR SHORT CIRCUIT TO POWER**

1 Measure the resistance between:

| CA265, harness side | Vehicle battery |
|---|---|
| Electric parking brake hall effect - signal - Pin 12 | Positive terminal |

Is the resistance greater than 100 Kohms?

**Yes**

GO to Q3.

**No**

GO to Q10.

**Q3: CHECK THE ACTUATOR SIGNAL CIRCUIT FOR SHORT CIRCUIT TO GROUND**

1 Measure the resistance between:

| CA266, harness side | Vehicle battery |
|---|---|
| Electric parking brake actuator - signal - Pin 10 | Negative terminal |

Is the resistance greater than 100 Kohms?

**Yes**

GO to Q4.

**No**

GO to Q11.

**Q4: CHECK THE ACTUATOR SIGNAL CIRCUIT FOR SHORT CIRCUIT TO POWER**

1 Measure the resistance between:

| CA266, harness side | Vehicle battery |
|---|---|
| Electric parking brake actuator - signal - Pin 10 | Negative terminal |

Is the resistance greater than 100 Kohms?

**Yes**

GO to Q5.

**No**

GO to Q12.

**Q5: CHECK THE SENSOR RETURN CIRCUIT FOR SHORT CIRCUIT TO BATTERY**

1 Measure the resistance between:

| CA265, harness side | Vehicle battery |
|---|---|
| Electric parking brake hall effect - ground - Pin 13 | Positive terminal |

Is the resistance greater than 100 Kohms?

**Yes**

GO to Q6.

**No**

GO to Q13.

**Q6: CHECK THE SENSOR RETURN CIRCUIT FOR OPEN CIRCUIT**

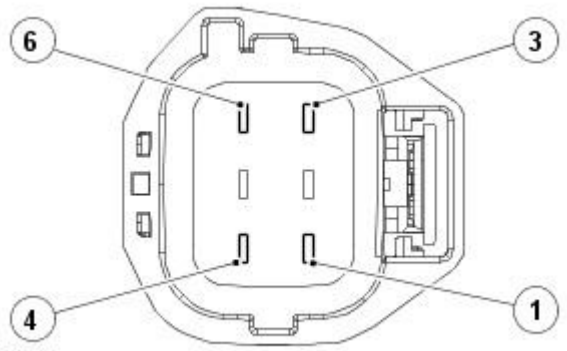

E55107

1 EPB actuator connector, CA269 disconnected.

2 Measure the resistance between:

| CA265, harness side | CA269, harness side |
|---|---|
| Electric parking brake hall effect - ground - Pin 13 | Electric parking brake hall effect - ground - Pin 05 |

GETtheMANUALS.org

Is the resistance less than 10 ohms?

**Yes**

GO to Q7.

**No**

REPAIR the open circuit. For additional information, refer to the wiring diagrams.

**Q7: CHECK THE HALL EFFECT 5 VOLT SUPPLY CIRCUIT FOR OPEN CIRCUIT**

1 Measure the resistance between:

| CA265, harness side | CA269, harness side |
|---|---|
| Electric parking brake hall effect - signal - Pin 12 | Electric parking brake hall effect - signal - Pin 03 |

Is the resistance less than 10 ohms?

**Yes**

GO to Q8.

**No**

REPAIR the open circuit. For additional information, refer to the wiring diagrams.

**Q8: CHECK THE ACTUATOR SIGNAL CIRCUIT FOR OPEN CIRCUIT**

1 Measure the resistance between:

| CA266, harness side | CA269, harness side |
|---|---|
| Electric parking brake actuator - signal - Pin 10 | Electric parking brake actuator - signal - Pin 04 |

Is the resistance less than 10 ohms?

**Yes**

An intermittent fault may be present in the wiring harness. Visually check for chaffed wires or other physical damage to the harness. If no fault is found in the circuit, suspect the following component(s):- EPB module- EPB actuator- EPB module connector CA265- EPB module connector CA266- EPB actuator connector CA269

**No**

REPAIR the open circuit. For additional information, refer to the wiring diagrams.

**Q9: CHECK IF THE SHORT CIRCUIT IS IN THE HARNESS OR THE ACTUATOR**

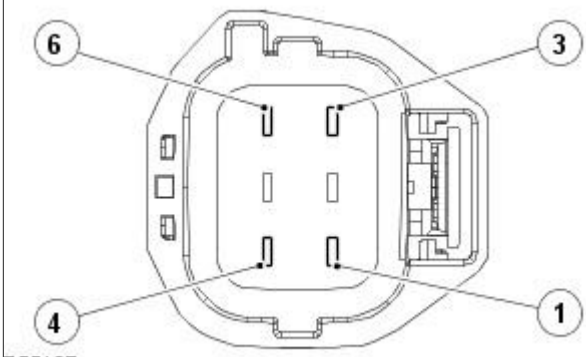

E55107

1 EPB actuator connector, CA269 disconnected.

2 Measure the resistance between:

| CA265, harness side | Vehicle battery |
|---|---|
| Electric parking brake hall effect - signal - Pin 12 | Negative terminal |

Is the resistance greater than 100 Kohms?

**Yes**

INSTALL a new EPB actuator.

REFER to: Parking Brake Release Actuator (206-05 Parking Brake and Actuation, Removal and Installation).

**No**

REPAIR the short circuit. For additional information, refer to the wiring diagrams.

**Q10: CHECK IF THE SHORT CIRCUIT IS IN THE HARNESS OR THE ACTUATOR**

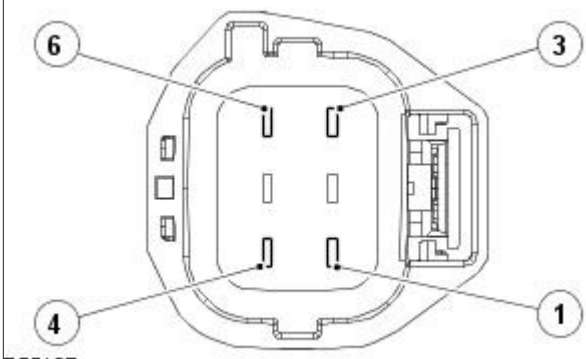

E55107

1 EPB actuator connector, CA269 disconnected.

2 Measure the resistance between:

| CA265, harness side | Vehicle battery |
|---|---|
| Electric parking brake hall effect - signal - Pin 12 | Positive terminal |

Is the resistance greater than 100 Kohms?

**Yes**

INSTALL a new EPB actuator.

REFER to: Parking Brake Release Actuator (206-05 Parking Brake and Actuation, Removal and Installation).

GETtoMANUALS.org

**No**

REPAIR the short circuit. For additional information, refer to the wiring diagrams.

**Q11: CHECK IF THE SHORT CIRCUIT IS IN THE HARNESS OR THE ACTUATOR**

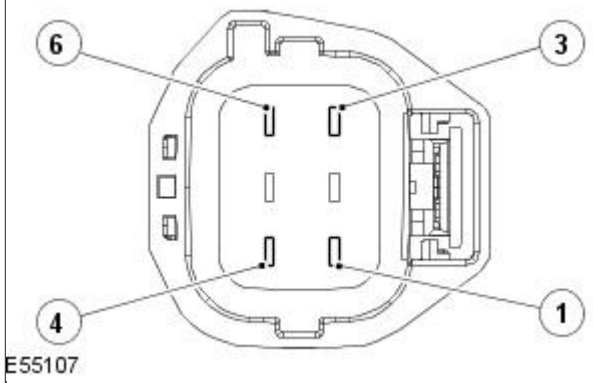


1 EPB actuator connector, CA269 disconnected.

2 Measure the resistance between:

| CA266, harness side | Vehicle battery |
|---|---|
| Electric parking brake actuator - signal - Pin 10 | Negative terminal |

Is the resistance greater than 100 Kohms?

**Yes**

INSTALL a new EPB actuator.
REFER to: Parking Brake Release Actuator (206-05 Parking Brake and Actuation, Removal and Installation).

**No**

REPAIR the short circuit. For additional information, refer to the wiring diagrams.

**Q12: CHECK IF THE SHORT CIRCUIT IS IN THE HARNESS OR THE ACTUATOR**

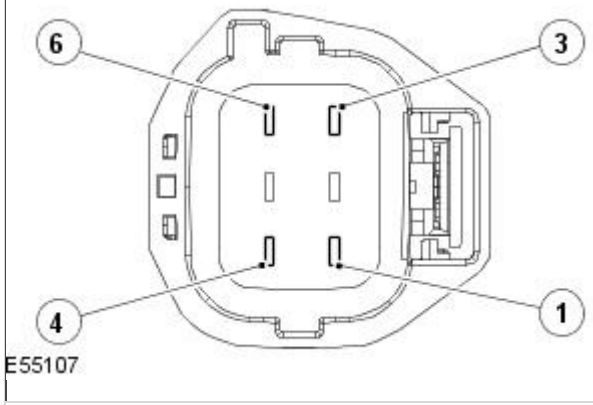


1 EPB actuator connector, CA269 disconnected.

2 Measure the resistance between:

| CA266, harness side | Vehicle battery |
|---|---|
| Electric parking brake actuator - signal - Pin 10 | Positive terminal |

Is the resistance greater than 100 Kohms?

**Yes**

INSTALL a new EPB actuator.
REFER to: Parking Brake Release Actuator (206-05 Parking Brake and Actuation, Removal and Installation).

**No**

REPAIR the short circuit. For additional information, refer to the wiring diagrams.

**Q13: CHECK IF THE SHORT CIRCUIT IS IN THE HARNESS OR THE ACTUATOR**

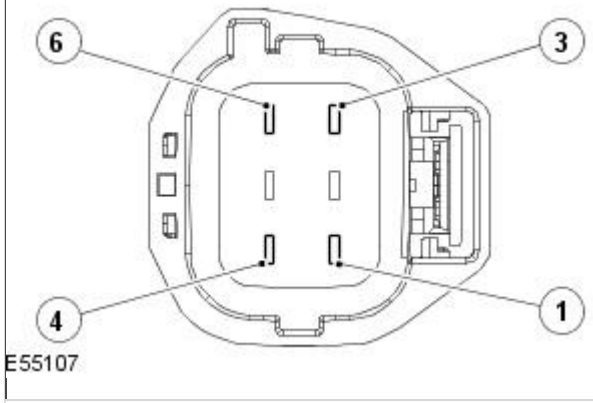


1 EPB actuator connector, CA269 disconnected.

2 Measure the resistance between:

| CA265, harness side | Vehicle battery |
|---|---|
| Electric parking brake hall effect - ground - Pin 13 | Positive terminal |

Is the resistance greater than 100 Kohms?

**Yes**

INSTALL a new EPB actuator.
REFER to: Parking Brake Release Actuator (206-05 Parking Brake and Actuation, Removal and Installation).

GETtheMANUALS.com

| | |
|---|---|
| | **No**<br>REPAIR the short circuit. For additional information, refer to the wiring diagrams. |

## PINPOINT TEST R : SECONDARY RELEASE HARNESS SHORT CIRCUIT TO BATTERY OR OPEN CIRCUIT

| TEST CONDITIONS | DETAILS/RESULTS/ACTIONS |
|---|---|
| **R1: CHECK THE PRIMARY APPLY SIGNAL CIRCUIT FOR SHORT CIRCUIT TO POWER** | |
| | 1 Key off. |
| 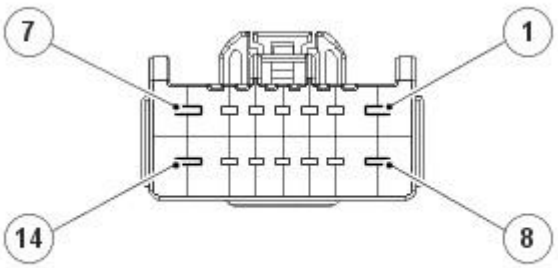 <br>E55103 | 2 Electric parking brake module connector 1, CA265 disconnected. |
| 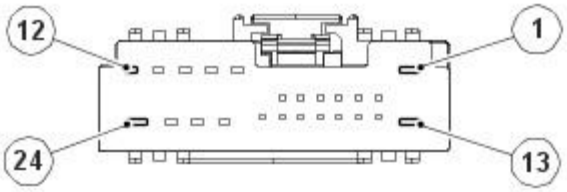 <br>E55104 | 3 Electric parking brake module connector 2, CA266 disconnected. |
| | 4 Key on, engine off.<br>5 Measure the resistance between:<br>**CA265, harness side** — **Vehicle battery**<br>Electric parking brake switch apply 1 - signal - Pin 10 — Positive terminal |
| | Is the resistance greater than 100 Kohms?<br>**Yes**<br>GO to R2.<br>**No**<br>GO to R8. |
| **R2: CHECK THE PRIMARY RELEASE SIGNAL CIRCUIT FOR SHORT CIRCUIT TO POWER** | |
| | 1 Measure the resistance between:<br>**CA265, harness side** — **Vehicle battery**<br>Electric parking brake switch release 1 - signal - Pin 11 — Positive terminal |
| | Is the resistance greater than 100 Kohms?<br>**Yes**<br>GO to R3.<br>**No**<br>GO to R9. |
| **R3: CHECK THE SECONDARY APPLY SIGNAL CIRCUIT FOR SHORT CIRCUIT TO POWER** | |
| | 1 Measure the resistance between:<br>**CA266, harness side** — **Vehicle battery**<br>Electric parking brake switch apply 2 - signal - Pin 02 — Positive terminal |
| | Is the resistance greater than 100 Kohms?<br>**Yes**<br>GO to R4.<br>**No**<br>GO to R10. |
| **R4: CHECK THE SECONDARY RELEASE SIGNAL CIRCUIT FOR SHORT CIRCUIT TO POWER** | |
| | 1 Measure the resistance between:<br>**CA266, harness side** — **Vehicle battery**<br>Electric parking brake switch release 2 - signal - Pin 14 — Positive terminal |
| | Is the resistance greater than 100 Kohms?<br>**Yes**<br>GO to R5.<br>**No**<br>GO to R11. |
| **R5: CHECK THE SECONDARY RELEASE SIGNAL CIRCUIT FOR OPEN CIRCUIT** | |

GETtheMANUALS.org

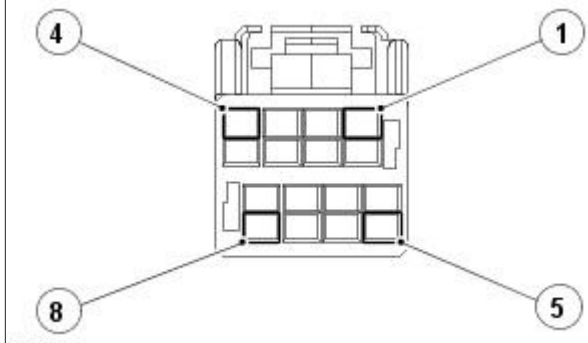

E55102

1 Electric parking brake switch connector, CA243 disconnected.

2 Measure the resistance between:

| CA266, harness side | CA243, harness side |
|---|---|
| Electric parking brake switch release 2 - signal - Pin 14 | Electric parking brake switch release 2 - signal - Pin 05 |

Is the resistance less than 10 ohms?

**Yes**

GO to R6.

**No**

REPAIR the open circuit. For additional information, refer to the wiring diagrams.

**R6: CHECK THE SWITCH RETURN SIGNAL CIRCUIT FOR OPEN CIRCUIT**

1 Measure the resistance between:

| CA266, harness side | CA243, harness side |
|---|---|
| Electric parking brake switch - switch return - Pin 06 | Electric parking brake switch - switch return - Pin 06 |

Is the resistance less than 10 ohms?

**Yes**

GO to R7.

**No**

REPAIR the open circuit. For additional information, refer to the wiring diagrams.

**R7: CHECK THE ELECTRIC PARKING BRAKE SWITCH**

1 Measure the resistance between:

| CA243, component side | CA243, component side |
|---|---|
| Electric parking brake switch release 2 - signal - Pin 05 | Electric parking brake switch - switch return - Pin 06 |

Is the resistance between 595 ohms - 611 ohms?

**Yes**

An intermittent fault may be present in the wiring harness. Visually check for chaffed wires or other physical damage to the harness. If no fault is found in the circuit, suspect the following component(s):- EPB module- EPB module connector CA265- EPB module connector CA266

**No**

INSTALL a new EPB switch.
REFER to: Parking Brake Switch (206-05 Parking Brake and Actuation, Removal and Installation).

**R8: CHECK IF THE SHORT CIRCUIT IS IN THE HARNESS OR THE SWITCH**

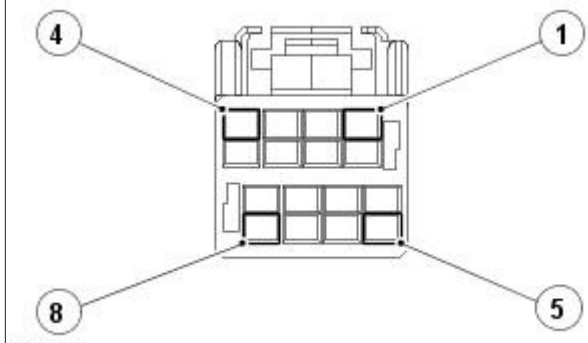

E55102

1 Electric parking brake switch connector, CA243 disconnected.

2 Measure the resistance between:

| CA265, harness side | Vehicle battery |
|---|---|
| Electric parking brake switch apply 1 - signal - Pin 10 | Positive terminal |

Is the resistance greater than 100 Kohms?

**Yes**

INSTALL a new EPB switch.
REFER to: Parking Brake Switch (206-05 Parking Brake and Actuation, Removal and Installation).

**No**

REPAIR the short circuit. For additional information, refer to the wiring diagrams.

**R9: CHECK IF THE SHORT CIRCUIT IS IN THE HARNESS OR THE SWITCH**

GETtheMANUALS.org

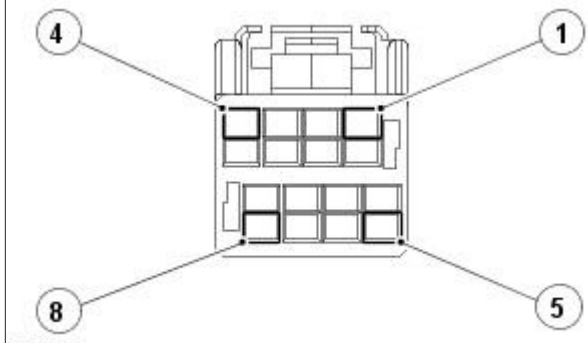

E55102

1 Electric parking brake switch connector, CA243 disconnected.

2 Measure the resistance between:

| CA265, harness side | Vehicle battery |
|---|---|
| Electric parking brake switch release 1 - signal - Pin 11 | Positive terminal |

Is the resistance greater than 100 Kohms?

**Yes**

INSTALL a new EPB switch.
REFER to: Parking Brake Switch (206-05 Parking Brake and Actuation, Removal and Installation).

**No**

REPAIR the short circuit. For additional information, refer to the wiring diagrams.

**R10: CHECK IF THE SHORT CIRCUIT IS IN THE HARNESS OR THE SWITCH**

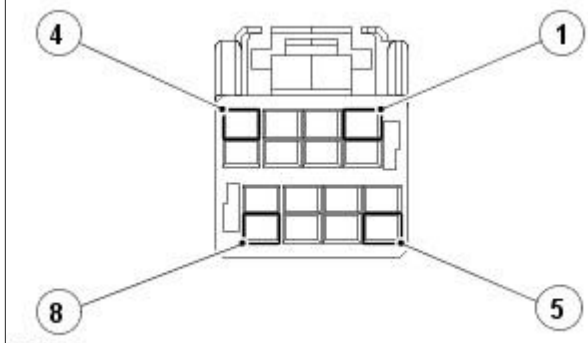

E55102

1 Electric parking brake switch connector, CA243 disconnected.

2 Measure the resistance between:

| CA266, harness side | Vehicle battery |
|---|---|
| Electric parking brake switch apply 2 - signal - Pin 02 | Positive terminal |

Is the resistance greater than 100 Kohms?

**Yes**

INSTALL a new EPB switch.
REFER to: Parking Brake Switch (206-05 Parking Brake and Actuation, Removal and Installation).

**No**

REPAIR the short circuit. For additional information, refer to the wiring diagrams.

**R11: CHECK IF THE SHORT CIRCUIT IS IN THE HARNESS OR THE SWITCH**

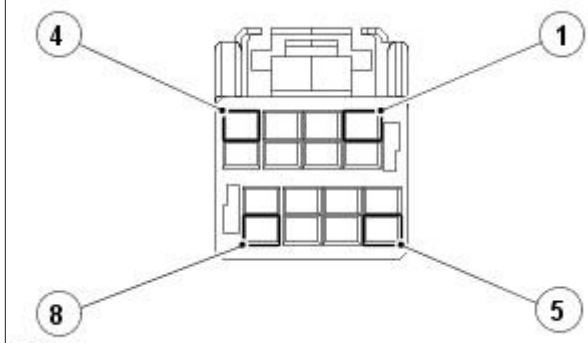

E55102

1 Electric parking brake switch connector, CA243 disconnected.

2 Measure the resistance between:

| CA266, harness side | Vehicle battery |
|---|---|
| Electric parking brake switch release 2 - signal - Pin 14 | Positive terminal |

Is the resistance greater than 100 Kohms?

**Yes**

INSTALL a new EPB switch.
REFER to: Parking Brake Switch (206-05 Parking Brake and Actuation, Removal and Installation).

**No**

REPAIR the short circuit. For additional information, refer to the wiring diagrams.

GETtheMANUALS.org

## PINPOINT TEST S : ACTUATOR DOES NOT FULLY RELEASE

| TEST CONDITIONS | DETAILS/RESULTS/ACTIONS |
|---|---|
| **S1: CHECK THE HIGH CURRENT GROUND CIRCUIT FOR AN OPEN CIRCUIT IN THE HARNESS** | |
| | 1 Key off. |
| 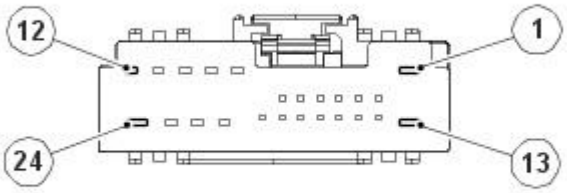 E55104 | 2 Electric parking brake connector 2, CA266 disconnected. |
| | 3 Measure the resistance between:<br>**CA266, harness side**: Electric parking brake module - ground - Pin 13<br>**Vehicle battery**: Negative terminal |
| | Is the resistance less than 10 ohms?<br>**Yes**<br>An intermittent fault may be present in the wiring harness. Visually check for chaffed wires or other physical damage to the harness. If no fault is found in the circuit, suspect the following component(s):- EPB module- EPB module connector CA266<br>**No**<br>REPAIR the open circuit. For additional information, refer to the wiring diagrams. |

## PINPOINT TEST T : SECONDARY RELEASE SWITCH CIRCUIT SHORT CIRCUIT TO GROUND

| TEST CONDITIONS | DETAILS/RESULTS/ACTIONS |
|---|---|
| **T1: CHECK THE SECONDARY RELEASE SIGNAL CIRCUIT FOR SHORT CIRCUIT TO GROUND** | |
| | 1 Key off. |
| 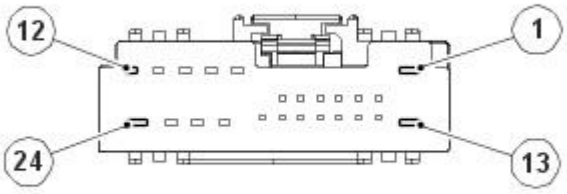 E55104 | 2 Electric parking brake connector 1, CA265 disconnected. |
| | 3 Key on, engine off.<br>4 Measure the resistance between:<br>**CA266, harness side**: Electric parking brake switch release 2 - signal - Pin 14<br>**Vehicle battery**: Negative terminal |
| | Is the resistance greater than 100 Kohms?<br>**Yes**<br>An intermittent fault may be present in the wiring harness. Visually check for chaffed wires or other physical damage to the harness. If no fault is found in the circuit, suspect the following component(s):- EPB module- EPB module connector CA266<br>**No**<br>GO to T2. |
| **T2: CHECK IF THE SHORT CIRCUIT IS IN THE HARNESS OR THE SWITCH** | |
| 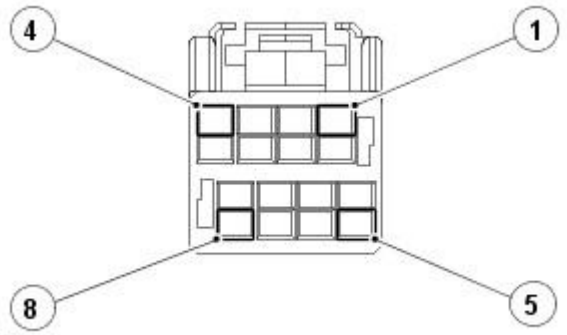 E55102 | 1 Electric parking brake switch connector, CA243 disconnected. |

GETtheMANUALS.org

| | |
|---|---|
| | 2 Measure the resistance between: |

| CA266, harness side | Vehicle battery |
|---|---|
| Electric parking brake switch release 2 - signal - Pin 14 | Negative terminal |

| | |
|---|---|
| | Is the resistance greater than 100 Kohms?<br>**Yes**<br>INSTALL a new EPB switch.<br>REFER to: Parking Brake Switch (206-05 Parking Brake and Actuation, Removal and Installation).<br>**No**<br>REPAIR the short circuit. For additional information, refer to the wiring diagrams. |

## PINPOINT TEST U : APPLY AND RELEASE SWITCH CONTACTS ENERGIZED SIMULTANEOUSLY

| TEST CONDITIONS | DETAILS/RESULTS/ACTIONS |
|---|---|
| **U1: CHECK THE PRIMARY EPB APPLY AND RELEASE CIRCUIT FOR SHORT CIRCUIT FAULTS** | |
| | 1 Key off. |
| 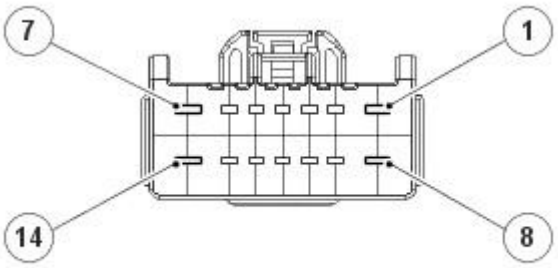 <br>E55103 | 2 Electric parking brake module connector 1, CA265 disconnected. |
| 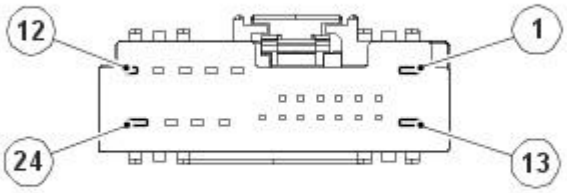 <br>E55104 | 3 Electric parking brake module connector 2, CA266 disconnected. |
| | 4 Make sure the parking brake switch is not in the apply or release position. |
| | 5 Measure the resistance between: |

| CA265, harness side | CA265, harness side |
|---|---|
| Electric parking brake switch apply 1 - signal - Pin 10 | Electric parking brake switch release 1 - signal - Pin 11 |

| | |
|---|---|
| | Is the resistance between 1.19 Kohms - 1.222 Kohms?<br>**Yes**<br>GO to U2.<br>**No**<br>GO to U3. |
| **U2: CHECK THE SECONDARY EPB APPLY AND RELEASE CIRCUIT FOR SHORT CIRCUIT FAULTS** | |
| | 1 Make sure the parking brake switch is not in the apply or release position. |
| | 2 Measure the resistance between: |

| CA266, harness side | CA266, harness side |
|---|---|
| Electric parking brake switch apply 2 - signal - Pin 02 | Electric parking brake switch release 2 - signal - Pin 14 |

| | |
|---|---|
| | Is the resistance between 1.19 Kohms - 1.222 Kohms?<br>**Yes**<br>An intermittent fault may be present in the wiring harness. Visually check for chaffed wires or other physical damage to the harness. If no fault is found in the circuit, suspect the following component(s):- EPB module- EPB module connector CA265- EPB module connector CA266<br>**No**<br>GO to U4. |
| **U3: CHECK IF THE SHORT CIRCUIT IS IN THE HARNESS OR THE SWITCH** | |

GETtheMANUALS.org

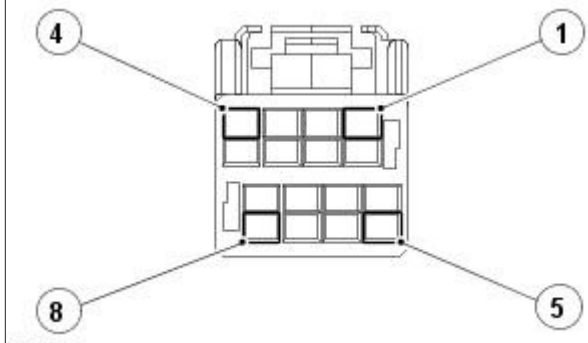

E55102

1 Electric parking brake switch, CA243 connector disconnected.

2 Measure the resistance between:

| CA265, harness side | CA265, harness side |
|---|---|
| Electric parking brake switch apply 1 - signal - Pin 10 | Electric parking brake switch release 1 - signal - Pin 11 |

Is the resistance greater than 100 Kohms?

**Yes**

INSTALL a new EPB switch.
REFER to: Parking Brake Switch (206-05 Parking Brake and Actuation, Removal and Installation).

**No**

REPAIR the short circuit. For additional information, refer to the wiring diagrams.

**U4: CHECK IF THE SHORT CIRCUIT IS IN THE HARNESS OR THE SWITCH**

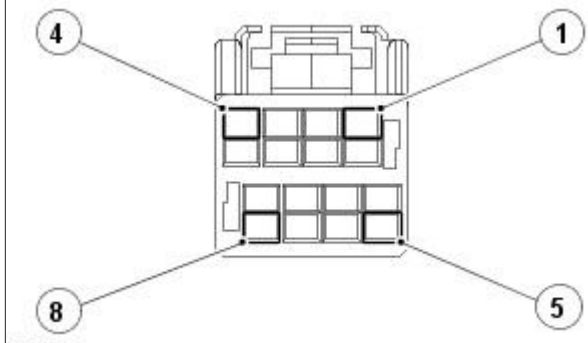

E55102

1 Electric parking brake switch connector, CA243 disconnected.

2 Measure the resistance between:

| CA266, harness side | CA266, harness side |
|---|---|
| Electric parking brake switch apply 2 - signal - Pin 02 | Electric parking brake switch release 2 - signal - Pin 14 |

Is the resistance greater than 100 Kohms?

**Yes**

INSTALL a new EPB switch.
REFER to: Parking Brake Switch (206-05 Parking Brake and Actuation, Removal and Installation).

**No**

REPAIR the short circuit. For additional information, refer to the wiring diagrams.

## PINPOINT TEST V : BRAKE SWITCH INPUT STATUS PLAUSIBILITY FAILURE

| TEST CONDITIONS | DETAILS/RESULTS/ACTIONS |
|---|---|

**V1: CHECK THE BRAKE SWITCH CIRCUIT FOR SHORT CIRCUIT TO POWER IN HARNESS**

1 Key off.

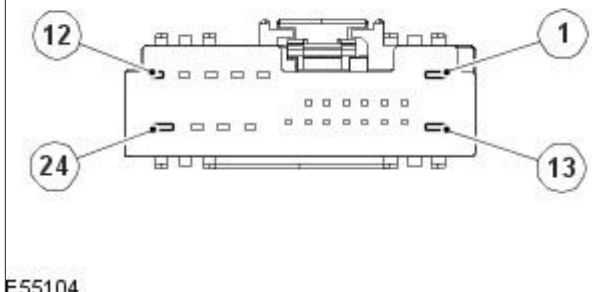

E55104

2 Electric parking brake module connector 2, CA266 disconnected.

3 Key on, engine off.

4 Make sure the brake pedal is not pressed.

5 Measure the resistance between:

| CA266, harness side | Vehicle battery |
|---|---|
| Brake switch - signal - Pin 07 | Positive terminal |

GETtheMANUAL.org

Is the resistance greater than 100 Kohms?

**Yes**

GO to V2.

**No**

GO to V3.

**V2: CHECK THE BRAKE SWITCH CIRCUIT FOR SHORT CIRCUIT TO GROUND IN THE HARNESS**

1 Measure the resistance between:

| CA266, harness side | Vehicle battery |
|---|---|
| Brake switch - signal - Pin 07 | Negative terminal |

Is the resistance greater than 100 Kohms?

**Yes**

The following items have not been fully tested :- EPB module- Brake switch- ECM

**No**

REPAIR the short circuit. For additional information, refer to the wiring diagrams.

**V3: CHECK THE BRAKE SWITCH CIRCUIT FOR SHORT CIRCUIT TO POWER IN THE HARNESS**

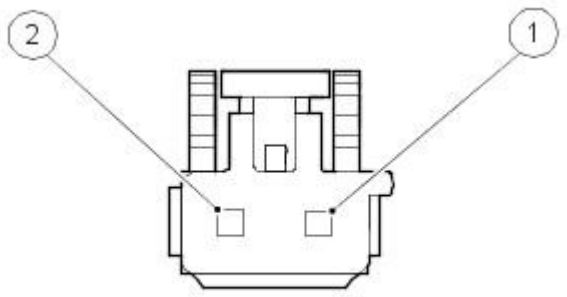


E55108

1 Brake switch connector, CR78 disconnected.

2 Measure the resistance between:

| CA266, harness side | Vehicle battery |
|---|---|
| Brake switch - signal - Pin 07 | Positive terminal |

Is the resistance greater than 100 Kohms?

**Yes**

INSTALL a new brake switch.

**No**

REPAIR the short circuit. For additional information, refer to the wiring diagrams.

**PINPOINT TEST W : GEARSHIFT POSITION SHORT CIRCUIT TO GROUND (VEHICLES WITH PETROL ENGINE ONLY)**

| TEST CONDITIONS | DETAILS/RESULTS/ACTIONS |
|---|---|

**W1: CHECK THE SIGNAL CIRCUIT FOR SHORT CIRCUIT TO GROUND**

1 Key off.

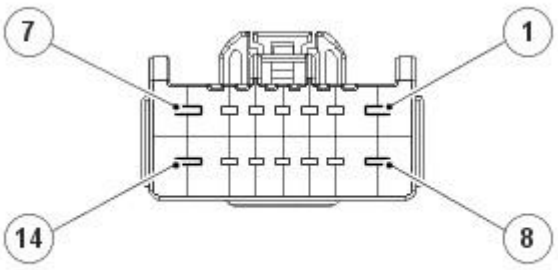


E55103

2 Electric parking brake module connector 1, CA265 disconnected.

3 Key on, engine off.

4 Measure the resistance between:

| CA265, harness side | Vehicle battery |
|---|---|
| In-gear switch - signal - Pin 03 | Negative terminal |

Is the resistance greater than 100 Kohms?

**Yes**

An intermittent fault may be present in the wiring harness. Visually check for chaffed wires or other physical damage to the harness. If no fault is found in the circuit, suspect the following component(s):- EPB module- EPB module connector CA265

**No**

GO to W2.

**W2: CHECK IF THE SHORT CIRCUIT IS IN THE HARNESS OR THE IG SWITCH**

GETtheMANUALS.org

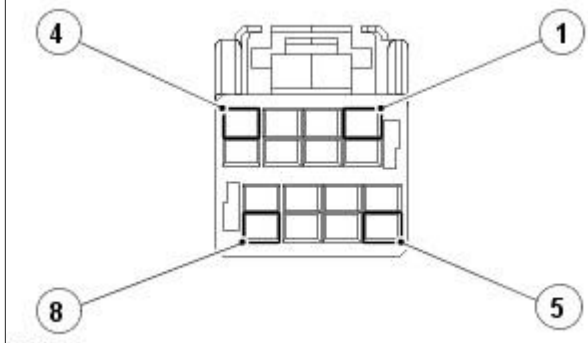

E55102

1 In-Gear (IG) switch connector, GB03 disconnected.

2 Measure the resistance between:

| CA265, harness side | Vehicle battery |
|---|---|
| In-gear switch - signal - Pin 03 | Negative terminal |

Is the resistance greater than 100 Kohms?

**Yes**

INSTALL a new in-gear switch.

**No**

REPAIR the short circuit. For additional information, refer to the wiring diagrams.

## PINPOINT TEST X : ACTUATOR OUTPUT OPEN CIRCUIT

| TEST CONDITIONS | DETAILS/RESULTS/ACTIONS |
|---|---|

### X1: CHECK THE ACTUATOR CIRCUIT RESISTANCE

1 Key off.

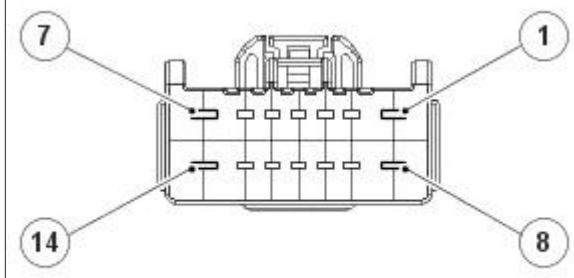

E55103

2 Electric parking brake module connector 1, CA265 disconnected.

3 Key on, engine off.

4 Measure the resistance between:

| CA265, harness side | CA265, harness side |
|---|---|
| Electric parking brake actuator - positive - Pin 14 | Electric parking brake actuator - negative - Pin 07 |

Is the resistance between 0.5 ohms - 1 ohms?

**Yes**

An intermittent fault may be present in the wiring harness. Visually check for chaffed wires or other physical damage to the harness. If no fault is found in the circuit, suspect the following component(s):- EPB module- EPB module connector CA265

**No**

GO to X2.

### X2: CHECK THE ACTUATOR SIGNAL CIRCUIT FOR OPEN CIRCUIT

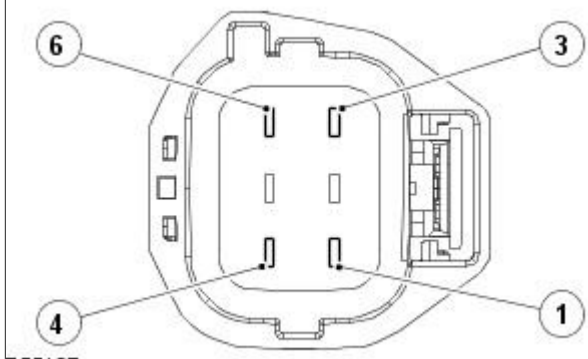

E55107

1 EPB actuator connector, CA269 disconnected.

2 Measure the resistance between:

| CA265, harness side | CA269, harness side |
|---|---|
| Electric parking brake actuator - positive - Pin 14 | Electric parking brake actuator - positive - Pin 01 |

GETtheMANUALS.org

| | |
|---|---|
| | Is the resistance less than 10 ohms?<br>**Yes**<br>GO to X3.<br>**No**<br>REPAIR the open circuit. For additional information, refer to the wiring diagrams. |
| **X3: CHECK THE ACTUATOR RETURN CIRCUIT FOR OPEN CIRCUIT** | |
| | 1 Measure the resistance between: |

| CA265, harness side | CA269, harness side |
|---|---|
| Electric parking brake actuator - negative - Pin 07 | Electric parking brake actuator - negative - Pin 06 |

| | |
|---|---|
| | Is the resistance less than 10 ohms?<br>**Yes**<br>GO to X4.<br>**No**<br>REPAIR the open circuit. For additional information, refer to the wiring diagrams. |
| **X4: CHECK THE ACTUATOR CIRCUIT RESISTANCE** | |
| | 1 Measure the resistance between: |

| CA269, component side | CA269, component side |
|---|---|
| Electric parking brake actuator - positive - Pin 01 | Electric parking brake actuator - negative - Pin 06 |

| | |
|---|---|
| | Is the resistance between 0.5 ohms - 1 ohm?<br>**Yes**<br>REPAIR the open circuit. For additional information, refer to the wiring diagrams.<br>**No**<br>INSTALL a new EPB actuator.<br>REFER to: Parking Brake Release Actuator (206-05 Parking Brake and Actuation, Removal and Installation). |

## PINPOINT TEST Y : GEARSHIFT POSITION, SHORT CIRCUIT TO BATTERY (VEHICLES WITH DIESEL ENGINE ONLY)

| TEST CONDITIONS | DETAILS/RESULTS/ACTIONS |
|---|---|
| **Y1: CHECK THE IN-GEAR SWITCH SUPPLY CIRCUIT** | |
| 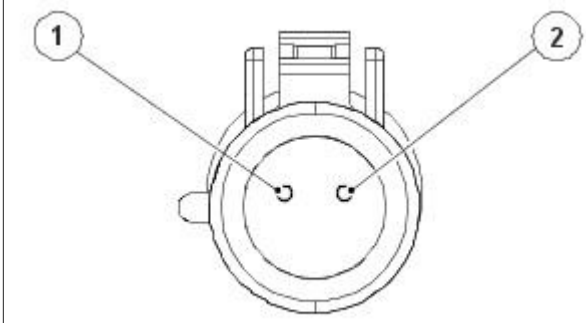 <br>E55106 | 1 In-Gear (IG) switch connector, GB04 disconnected. |
| | 2 Key on, engine off. |
| | 3 Measure the voltage between: |

| GB04, harness side | Vehicle battery |
|---|---|
| In-gear switch - supply | Negative terminal |

| | |
|---|---|
| | Is the voltage between 4.5 volts - 5.5 volts ?<br>**Yes**<br>GO to Y2.<br>**No**<br>GO to Y4. |
| **Y2: CHECK THE IN-GEAR SWITCH SIGNAL CIRCUIT FOR SHORT CIRCUIT TO POWER** | |
| | 1 Measure the resistance between: |

| GB04, harness side | Vehicle battery |
|---|---|
| In-gear switch - signal - Pin 02 | Positive terminal |

| | |
|---|---|
| | Is the resistance greater than 100 Kohms?<br>**Yes**<br>GO to Y3.<br>**No**<br>GO to Y6. |
| **Y3: CHECK THE IN-GEAR SWITCH RETURN CIRCUIT FOR SHORT CIRCUIT TO POWER** | |
| | 1 Measure the resistance between: |

| GB04, harness side | Vehicle battery |
|---|---|
| In-gear switch - return - Pin 01 | Negative terminal |

| | |
|---|---|
| | Is the resistance greater than 100 Kohms?<br>**Yes**<br>An intermittent fault may be present in the wiring harness. Visually check for chaffed wires or other physical damage to the harness. If no fault is found in the circuit, suspect the following component(s):- IG switch<br>**No**<br>GO to Y7. |
| **Y4: CHECK IF THE SHORT CIRCUIT IS IN THE HARNESS OR THE CONTROL MODULE** | |
| | 1 Key off. |

GETtheMANUALS.org

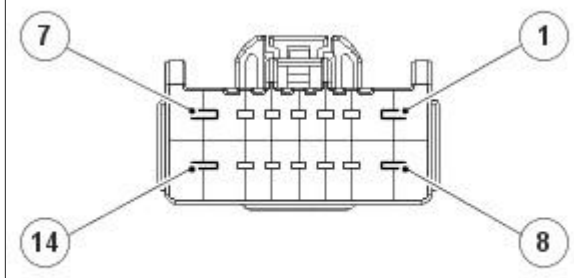

E55103

2 Electric parking brake module connector 1, CA265 disconnected.

3 Key on, engine off.

4 Measure the resistance between:

| GB04, harness side | Vehicle battery |
|---|---|
| In gear switch - supply | Negative teminal |

Is the resistance greater than 100 Kohms?

**Yes**

INSTALL a new EPB module.
REFER to: Parking Brake Module (206-05 Parking Brake and Actuation, Removal and Installation).

**No**

GO to Y5.

**Y5: CHECK IF THE SHORT CIRCUIT IS IN THE HARNESS OR THE SWITCH**

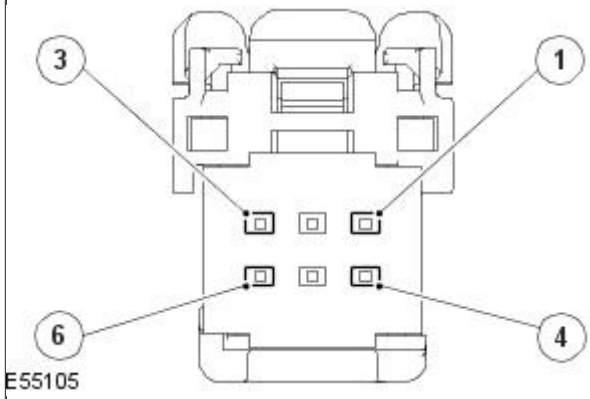

E55105

1 Clutch pedal position sensor (CLPS) connector, CA287 disconnected.

2 Measure the resistance between:

| GB04, harness side | Vehicle battery |
|---|---|
| In gear switch - supply | Negative terminal |

Is the resistance greater than 100 Kohms?

**Yes**

INSTALL a new CLPS.

**No**

REPAIR the short circuit. For additional information, refer to the wiring diagrams.

**Y6: CHECK IF THE SHORT CIRCUIT IS IN THE HARNESS OR THE CONTROL MODULE**

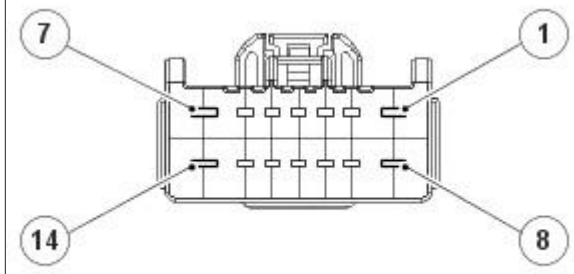

E55103

1 Electric parking brake module connector 1, CA265 disconnected.

2 Measure the resistance between:

| GB04, harness side | Vehicle battery |
|---|---|
| In-gear switch - signal - Pin 02 | Positive terminal |

Is the resistance greater than 100 Kohms?

**Yes**

INSTALL a new EPB module.
REFER to: Parking Brake Module (206-05 Parking Brake and Actuation, Removal and Installation).

**No**

REPAIR the short circuit. For additional information, refer to the wiring diagrams.

**Y7: CHECK THE IN-GEAR SWITCH CIRCUIT RESISTANCE**

GETtheMANUALS.org

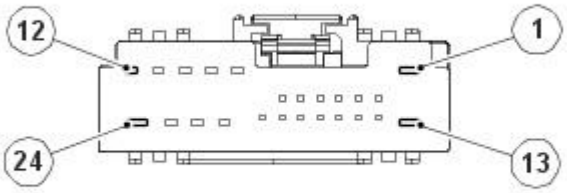

E55104

1 Electric parking brake module connector 2, CA266 disconnected.

2 Measure the resistance between:

| GB04, harness side | Vehicle battery |
|---|---|
| In-gear switch - return - Pin 01 | Positive terminal |

Is the resistance greater than 100 Kohms?

**Yes**

INSTALL a new EPB module.
REFER to: Parking Brake Module (206-05 Parking Brake and Actuation, Removal and Installation).

**No**

REPAIR the short circuit. For additional information, refer to the wiring diagrams.

## PINPOINT TEST Z : CLUTCH PEDAL POSITION SENSOR SHORT CIRCUIT TO GROUND

| TEST CONDITIONS | DETAILS/RESULTS/ACTIONS |
|---|---|

### Z1: CHECK THE 5 VOLT SUPPLY CIRCUIT FOR SHORT CIRCUIT TO GROUND

1 Key off.

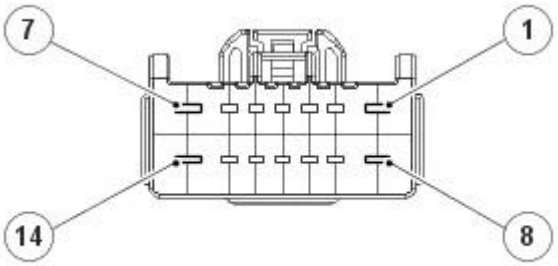

E55103

2 Electric parking brake module connector 1, CA265 disconnected.

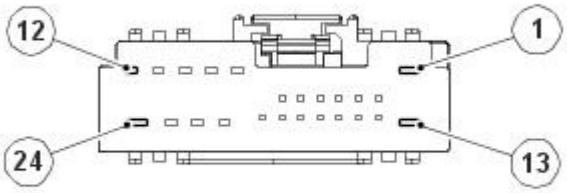

E55104

3 Electric parking brake module connector 2, CA266 disconnected.

4 Key on, engine off.

5 Measure the resistance between:

| CA265, harness side | Vehicle battery |
|---|---|
| Clutch position sensor - supply - Pin 05 | Negative terminal |

Is the resistance greater than 100 Kohms?

**Yes**

GO to Z2.

**No**

GO to Z6.

### Z2: CHECK THE SIGNAL CIRCUIT FOR SHORT CIRCUIT TO GROUND

1 Measure the resistance between:

| CA265, harness side | Vehicle battery |
|---|---|
| Clutch position sensor - signal - Pin 06 | Negative terminal |

Is the resistance greater than 100 Kohms?

**Yes**

GO to Z3.

**No**

GO to Z7.

GETtheMANUALS.org

### Z3: CHECK THE SIGNAL CIRCUIT FOR HIGH RESISTANCE

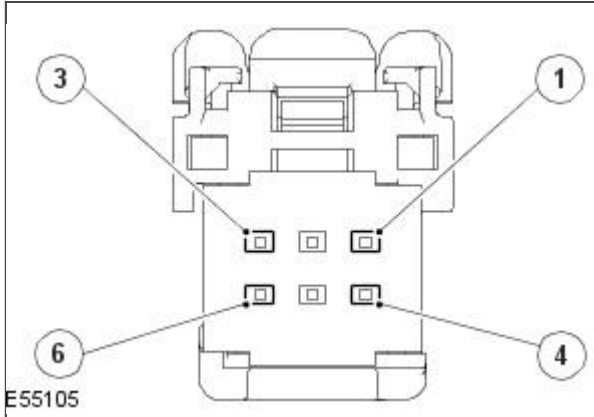


1 Clutch pedal position sensor (CLPS) connector, CA287 disconnected.

2 Measure the resistance between:

| CA265, harness side | CA287, harness side |
|---|---|
| Clutch position sensor - signal - Pin 06 | Clutch position sensor - signal - Pin 02 |

Is the resistance less than 10 ohms?

**Yes**

REPAIR the high resistance circuit. For additional information, refer to the wiring diagrams.

**No**

GO to Z4.

**Z4: CHECK THE 5 VOLT SUPPLY CIRCUIT FOR HIGH RESISTANCE**

1 Measure the resistance between:

| CA265, harness side | CA287, harness side |
|---|---|
| Clutch position sensor - supply - Pin 05 | Clutch position sensor - supply - Pin 03 |

Is the resistance less than 10 ohms?

**Yes**

GO to Z5.

**No**

REPAIR the high resistance circuit. For additional information, refer to the wiring diagrams.

**Z5: CHECK THE SENSOR RETURN CIRCUIT FOR HIGH RESISTANCE**

1 Measure the resistance between:

| CA266, harness side | CA287, harness side |
|---|---|
| Clutch position sensor - ground | Clutch position sensor - ground - pin 01 |

Is the resistance less than 10 ohms?

**Yes**

An intermittent fault may be present in the wiring harness. Visually check for chaffed wires or other physical damage to the harness. If no fault is found in the circuit, suspect the following components(s):- EPB module- CLPS- EPB module connector CA265- EPB module connector CA266- CLPS connector CA287

**No**

REPAIR the high resistance circuit. For additional information, refer to the wiring diagrams.

**Z6: CHECK IF THE SHORT CIRCUIT IS IN THE HARNESS OR THE SENSOR**

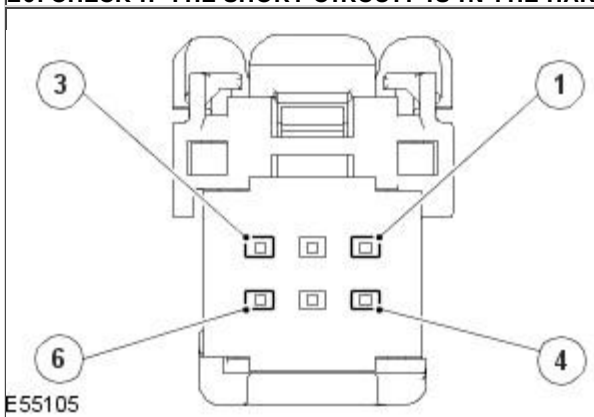


1 Clutch pedal position sensor (CLPS) connector, CA287 disconnected.

2 Measure the resistance between:

| CA265, harness side | Vehicle battery |
|---|---|
| Clutch position sensor - supply - Pin 05 | Negative terminal |

Is the resistance greater than 100 Kohms?

**Yes**

INSTALL a new CLPS.

**No**

REPAIR the short circuit. For additional information, refer to the wiring diagrams.

**Z7: CHECK IF THE SHORT CIRCUIT IS IN THE HARNESS OR THE SENSOR**

GETtheMANUALS.org

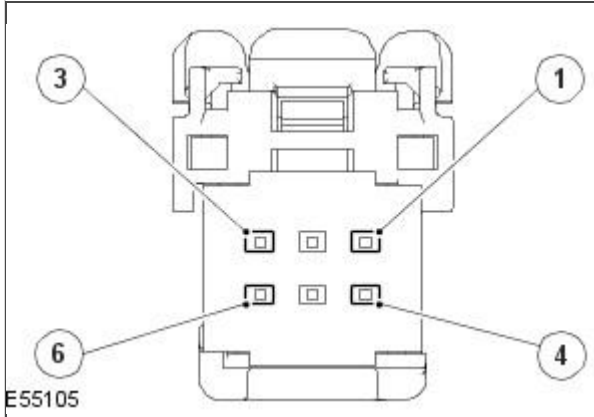


1 Clutch pedal position sensor (CLPS) connector, CA287 disconnected.

2 Measure the resistance between:

| CA265, harness side | Vehicle battery |
|---|---|
| Clutch position sensor - signal - Pin 06 | Negative terminal |

Is the resistance greater than 100 Kohms?

**Yes**

INSTALL a new CLPS.

**No**

REPAIR the short circuit. For additional information, refer to the wiring diagrams.

## PINPOINT TEST AA : CLUTCH PEDAL POSITION SENSOR, SHORT CIRCUIT TO POWER

| TEST CONDITIONS | DETAILS/RESULTS/ACTIONS |
|---|---|

### AA1: CHECK THE 5 VOLT SUPPLY CIRCUIT FOR SHORT CIRCUIT TO POWER

1 Key off.

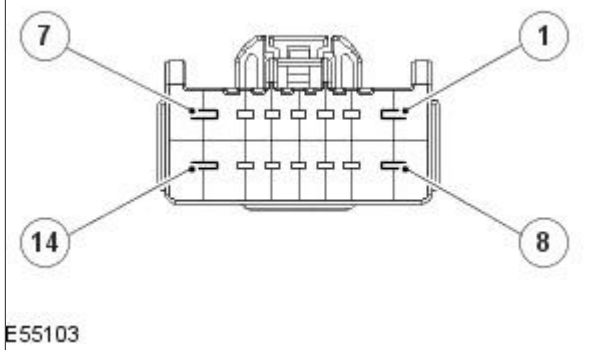


2 Electric parking brake module connector 1, CA265 disconnected.

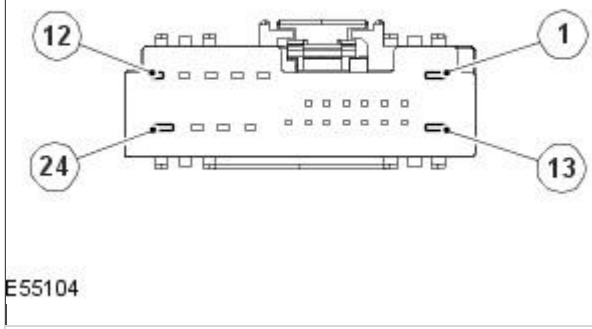


3 Electric parking brake module connector 2, CA266 disconnected.

4 Key on, engine off.

5 Measure the resistance between:

| CA265, harness side | Vehicle battery |
|---|---|
| Clutch position sensor - supply - Pin 05 | Positive terminal |

Is the resistance greater than 100 Kohms?

**Yes**

GO to AA2.

**No**

GO to AA4.

### AA2: CHECK THE SIGNAL CIRCUIT FOR SHORT CIRCUIT TO POWER

1 Measure the resistance between:

| CA265, harness side | Vehicle battery |
|---|---|
| Clutch position sensor - signal - Pin 06 | Positive terminal |

Is the resistance greater than 100 Kohms?

**Yes**

GO to AA3.

**No**

GO to AA5.

### AA3: CHECK THE SENSOR RETURN GROUND CIRCUIT FOR SHORT CIRCUIT TO POWER

GETtheMANUALS.org

1 Measure the resistance between:

| CA266, harness side | Vehicle battery |
|---|---|
| Clutch pedal position sensor - ground - Pin 03 | Positive terminal |

Is the resistance less than 10 ohms?

**Yes**

An intermittent fault may be present in the wiring harness. Visually check for chaffed wires or other physical damage to the harness. If no fault is found in the circuit, suspect the following component(s):- EPB module- EPB module connector CA265- EPB module connector CA266

**No**

GO to AA6.

**AA4: CHECK IF THE SHORT CIRCUIT IS IN THE HARNESS OR THE SENSOR**

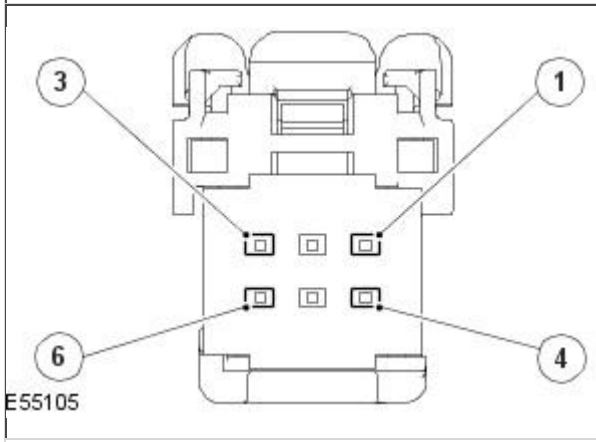


1 Clutch pedal position sensor (CLPS) connector, CA287 disconnected.

2 Measure the resistance between:

| CA265, harness side | Vehicle battery |
|---|---|
| Clutch pedal position sensor - supply - Pin 05 | Positive terminal |

Is the resistance greater than 100 Kohms?

**Yes**

INSTALL a new CLPS.

**No**

REPAIR the short circuit. For additional information, refer to the wiring diagrams.

**AA5: CHECK IF THE SHORT CIRCUIT IS IN THE HARNESS OR THE SENSOR**

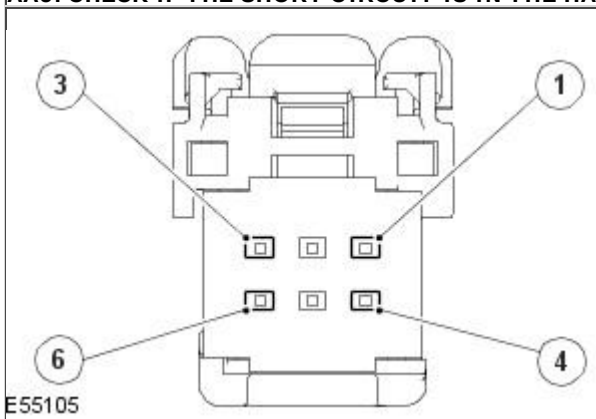


1 Clutch pedal position sensor (CLPS) connector, CA287 disconnected.

2 Measure the resistance between:

| CA265, harness side | Vehicle battery |
|---|---|
| Clutch position sensor - signal - Pin 06 | Positive terminal |

Is the resistance greater than 100 Kohms?

**Yes**

INSTALL a new CLPS.

**No**

REPAIR the short circuit. For additional information, refer to the wiring diagrams.

**AA6: CHECK IF THE SHORT CIRCUIT IS IN THE HARNESS OR THE SENSOR**

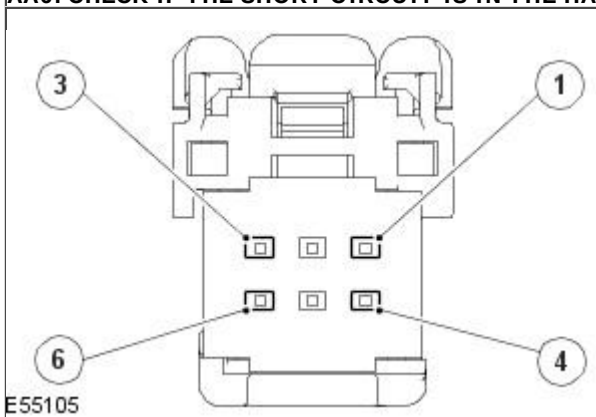


1 Clutch pedal position sensor (CLPS) connector, CA287 disconnected.

2 Measure the resistance between:

| CA266, harness side | Vehicle battery |
|---|---|
| Clutch pedal position sensor - ground - Pin 03 | Positive terminal |

GETtheMANUALS.org

| | |
|---|---|
| | Is the resistance greater than 100 Kohms?<br>**Yes**<br>INSTALL a new CLPS.<br>**No**<br>REPAIR the short circuit. For additional information, refer to the wiring diagrams. |

## PINPOINT TEST AB : GEARSHIFT POSITION FAULT, GENERAL ELECTRICAL FAILURE (VEHICLES WITH DIESEL ENGINE ONLY)

| TEST CONDITIONS | DETAILS/RESULTS/ACTIONS |
|---|---|
| **AB1: CHECK THE 5 VOLT SUPPLY CIRCUIT FOR SHORT CIRCUIT TO GROUND** | |
| | 1 Key off. |
| 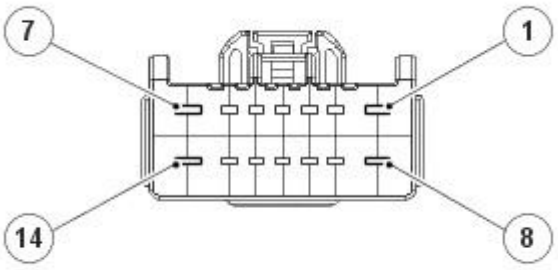 <br>E55103 | 2 Electric parking brake module connector 1, CA265 disconnected. |
| 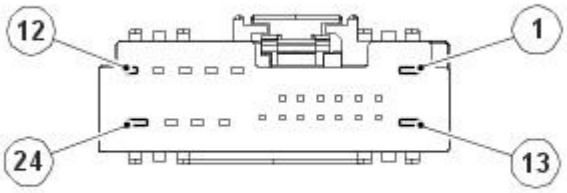 <br>E55104 | 3 Electric parking brake module connector 2, CA266 disconnected. |
| | 4 Key on, engine off.<br>5 Measure the resistance between:<br>**CA265, harness side**: Clutch position sensor - supply - Pin 05<br>**Vehicle battery**: Negative terminal |
| | Is the resistance greater than 100 Kohms?<br>**Yes**<br>GO to AB2.<br>**No**<br>GO to AB6. |
| **AB2: CHECK THE SIGNAL CIRCUIT FOR SHORT CIRCUIT TO GROUND** | |
| | 1 Measure the resistance between:<br>**CA265, harness side**: In-gear switch - signal - Pin 03<br>**Vehicle battery**: Negative terminal |
| | Is the resistance greater than 100 Kohms?<br>**Yes**<br>GO to AB3.<br>**No**<br>GO to AB8. |
| **AB3: CHECK THE SIGNAL CIRCUIT FOR OPEN CIRCUIT** | |
| 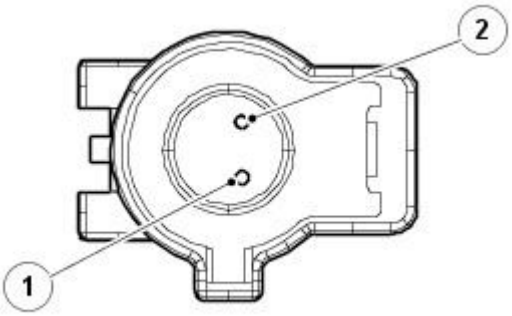 <br>E65080 | 1 In-Gear (IG) switch connector, GB04 disconnected. |
| | 2 Measure the resistance between:<br>**CA265, harness side**: In-gear switch - signal - Pin 03<br>**GB04, harness side**: In-gear switch - signal - Pin 02 |

GETtheMANUALS.org

Is the resistance less than 10 ohms?

**Yes**

GO to AB4.

**No**

REPAIR the open circuit. For additional information, refer to the wiring diagrams.

**AB4: CHECK THE SWITCH RETURN CIRCUIT FOR OPEN CIRCUIT**

1 Measure the resistance between:

| CA266, harness side | GB04, harness side |
|---|---|
| In-gear switch - return - Pin 15 | In-gear switch - signal - Pin 02 |

Is the resistance less than 10 ohms?

**Yes**

GO to AB5.

**No**

REPAIR the open circuit. For additional information, refer to the wiring diagrams.

**AB5: CHECK THE 5 VOLTS SUPPLY CIRCUIT FOR OPEN CIRCUIT**

1 Measure the resistance between:

| CA265, harness side | GB04, harness side |
|---|---|
| Clutch position sensor - supply - Pin 05 | Clutch position sensor - supply - Pin 03 |

Is the resistance less than 10 ohms?

**Yes**

An intermittent fault may be present in the wiring harness. Visually check for chaffed wires or other physical damage to the harness. If no fault is found in the circuit, suspect the following component(s):- IG switch- IG switch connector GB04- EPB module- EPB module connector CA265- EPB module connector CA266

**No**

REPAIR the open circuit. For additional information, refer to the wiring diagrams.

**AB6: CHECK IF THE SHORT CIRCUIT IS IN THE HARNESS OR THE IN-GEAR SWITCH**

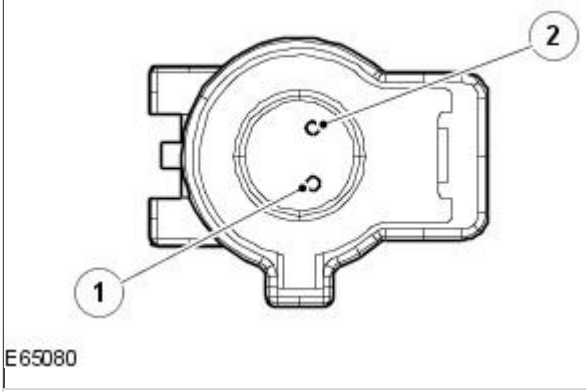


1 In-Gear (IG) switch connector, GB04 disconnected.

2 Measure the resistance between:

| CA265, harness side | Vehicle battery |
|---|---|
| Clutch position sensor - supply - Pin 05 | Negative terminal |

Is the resistance greater than 100 Kohms?

**Yes**

INSTALL a new in-gear switch.

**No**

GO to AB7.

**AB7: CHECK IF THE SHORT CIRCUIT IS IN THE HARNESS OR THE CLUTCH POSITION SENSOR**

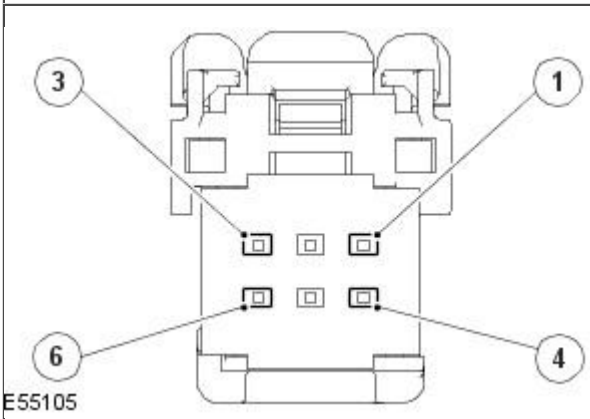


1 Clutch pedal position sensor (CLPS) connector, CA287 disconnected.

2 Measure the resistance between:

| CA265, harness side | Vehicle battery |
|---|---|
| Clutch position sensor - supply - Pin 05 | Negative terminal |

Is the resistance greater than 100 Kohms?

**Yes**

INSTALL a new CLPS.

**No**

REPAIR the short circuit. For additional information, refer to the wiring diagrams.

**AB8: CHECK IF THE SHORT CIRCUIT IS IN THE HARNESS OR THE SWITCH**

GETtheMANUALS.org

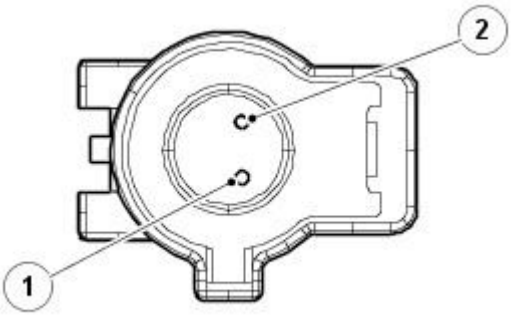

E65080

1 In-Gear (IG) switch connector, GB04 disconnected.

2 Measure the resistance between:

| CA265, harness side | Vehicle battery |
|---|---|
| In-gear switch - signal - Pin 03 | Negative terminal |

Is the resistance greater than 100 Kohms?

**Yes**

INSTALL a new in-gear switch.

**No**

REPAIR the short circuit. For additional information, refer to the wiring diagrams.

## PINPOINT TEST AC : PRIMARY RELEASE SWITCH CIRCUIT FAULT

| TEST CONDITIONS | DETAILS/RESULTS/ACTIONS |
|---|---|

### AC1: CHECK THE PRIMARY RELEASE SWITCH SIGNAL CIRCUIT FOR SHORT CIRCUIT TO POWER

1 Key off.

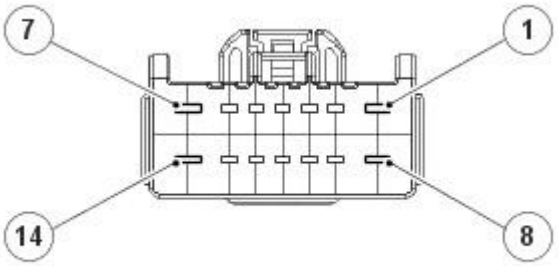

E55103

2 Electric parking brake module connector 1, CA265 disconnected.

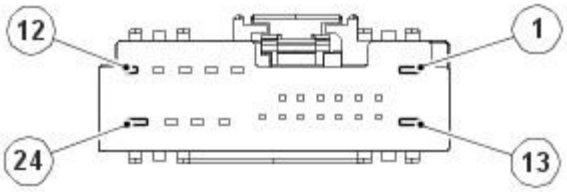

E55104

3 Electric parking brake module connector 2, CA266 disconnected.

4 Key on, engine off.

5 Measure the resistance between:

| CA265, harness side | Vehicle battery |
|---|---|
| Primary release switch signal 1 - pin 11 | Positive terminal |

Is the resistance greater than 100 Kohms?

**Yes**

GO to AC2.

**No**

GO to AC8.

### AC2: CHECK THE PRIMARY APPLY SWITCH SIGNAL CIRCUIT FOR SHORT CIRCUIT TO POWER

1 Measure the resistance between:

| CA265, harness side | Vehicle battery |
|---|---|
| Primary apply switch signal 1 - pin 10 | Positive terminal |

Is the resistance greater than 100 Kohms?

**Yes**

GO to AC3.

**No**

GO to AC9.

### AC3: CHECK THE SECONDARY APPLY SWITCH SIGNAL CIRCUIT FOR SHORT CIRCUIT TO POWER

GETtheMANUALS.org

1 Measure the resistance between:

| CA266, harness side | Vehicle battery |
|---|---|
| Secondary apply switch signal 2 - pin 02 | Positive terminal |

Is the resistance greater than 100 Kohms?

**Yes**

GO to AC4.

**No**

GO to AC10.

**AC4: CHECK THE SECONDARY RELEASE SWITCH SIGNAL CIRCUIT FOR SHORT CIRCUIT TO POWER**

1 Measure the resistance between:

| CA266, harness side | Vehicle battery |
|---|---|
| Secondary release switch signal 2 - pin 14 | Positive terminal |

Is the resistance greater than 100 Kohms?

**Yes**

GO to AC5.

**No**

GO to AC11.

**AC5: CHECK THE PRIMARY RELEASE SWITCH SIGNAL CIRCUIT FOR HIGH RESISTANCE**

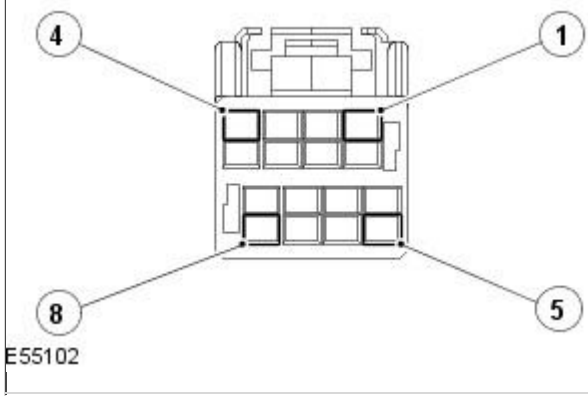


1 Electric parking brake switch connector, CA243 disconnected.

2 Measure the resistance between:

| CA265, harness side | CA243, harness side |
|---|---|
| Primary release switch signal 1 - pin 11 | Primary release switch signal 1 - pin 04 |

Is the resistance less than 10 ohms?

**Yes**

GO to AC6.

**No**

REPAIR the high resistance circuit. For additional information, refer to the wiring diagrams.

**AC6: CHECK THE APPLY SWITCH RETURN CIRCUIT FOR HIGH RESISTANCE**

1 Measure the resistance between:

| CA266, harness side | CA243, harness side |
|---|---|
| Switch return - pin 06 | Switch return - pin 06 |

Is the resistance less than 10 ohms?

**Yes**

GO to AC7.

**No**

INSTALL a new parking brake switch.
REFER to: Parking Brake Switch (206-05 Parking Brake and Actuation, Removal and Installation).

**AC7: CHECK THE SWITCH RESISTANCE**

1 Measure the resistance between:

| CA243, component side | CA243, component side |
|---|---|
| Switch release signal 1 - pin 04 | Switch return - pin 06 |

Is the resistance between 595 and 611 ohms?

**Yes**

An intermittent fault may be present in the wiring harness. Visually check for chaffed wires or other physical damage to the harness. If no fault is found in the circuit, suspect the following component(s):- EPB module- EPB module connector CA265- EPB module connector CA266

**No**

INSTALL a new parking brake switch.
REFER to: Parking Brake Switch (206-05 Parking Brake and Actuation, Removal and Installation).

**AC8: CHECK IF THE SHORT CIRCUIT IS IN THE HARNESS OR THE SWITCH**

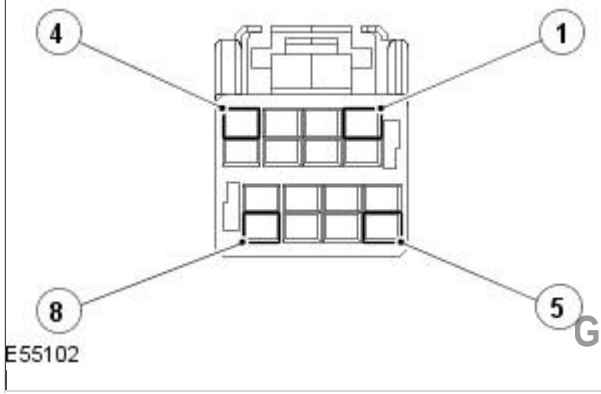


1 Electric parking brake switch connector, CA243 disconnected.

GETtheMANUALS.org

2 Measure the resistance between:

| CA265, component side | Vehicle battery |
|---|---|
| Release switch signal 1 - pin 11 | Positive terminal |

Is the resistance greater than 100 Kohms?

**Yes**

INSTALL a new parking brake switch.
REFER to: Parking Brake Switch (206-05 Parking Brake and Actuation, Removal and Installation).

**No**

REPAIR the short circuit. For additional information, refer to the wiring diagrams.

**AC9: CHECK IF THE SHORT CIRCUIT IS IN THE HARNESS OR THE SWITCH**

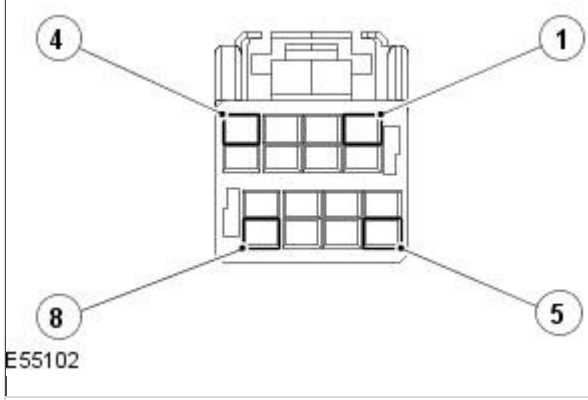


1 Electric parking brake switch connector, CA243 disconnected.

2 Measure the resistance between:

| CA265, component side | Vehicle battery |
|---|---|
| Apply switch signal 1 - pin 10 | Positive terminal |

Is the resistance greater than 100 Kohms?

**Yes**

INSTALL a new parking brake switch.
REFER to: Parking Brake Switch (206-05 Parking Brake and Actuation, Removal and Installation).

**No**

REPAIR the short circuit. For additional information, refer to the wiring diagrams.

**AC10: CHECK IF THE SHORT CIRCUIT IS IN THE HARNESS OR THE SWITCH**

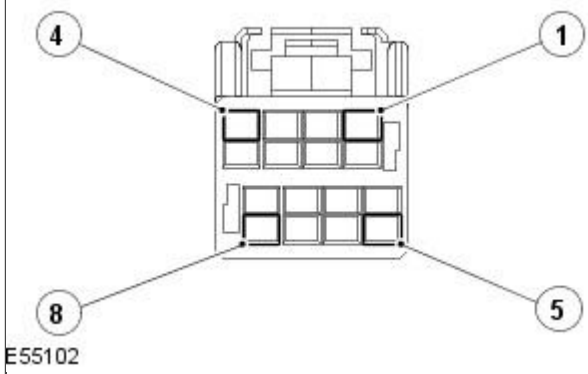


1 Electric parking brake switch connector, CA243 disconnected.

2 Measure the resistance between:

| CA266, component side | Vehicle battery |
|---|---|
| Apply switch signal 2 - pin 02 | Positive terminal |

Is the resistance greater than 100 Kohms?

**Yes**

INSTALL a new parking brake switch.
REFER to: Parking Brake Switch (206-05 Parking Brake and Actuation, Removal and Installation).

**No**

REPAIR the short circuit. For additional information, refer to the wiring diagrams.

**AC11: CHECK IF THE SHORT CIRCUIT IS IN THE HARNESS OR THE SWITCH**

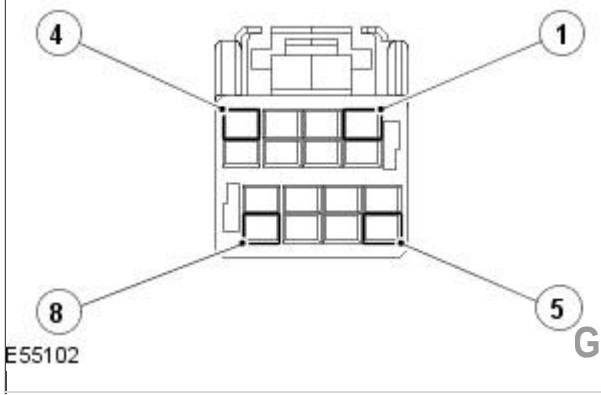


1 Electric parking brake switch connector, CA243 disconnected.

GETtheMANUALS.org

| | |
|---|---|
| | **2** Measure the resistance between: |

| CA266, component side | Vehicle battery |
|---|---|
| Release switch signal 2 - pin 14 | Positive terminal |

| | |
|---|---|
| | Is the resistance greater than 100 Kohms?<br>**Yes**<br>INSTALL a new parking brake switch.<br>REFER to: Parking Brake Switch (206-05 Parking Brake and Actuation, Removal and Installation).<br>**No**<br>REPAIR the short circuit. For additional information, refer to the wiring diagrams. |

GETtheMANUALS.org

# Parking Brake and Actuation - Parking Brake Cable Tension Release

General Procedures

| Special Tool(s) | |
|---|---|
| 206-082 | Electric parking brake release tool<br><br>206-082 |
| 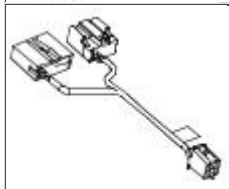 E69907 | Electric parking brake release tool<br><br>206-082-01 |

• CAUTIONS:

Whilst carrying out rear parking brake related service procedures, the tension on the rear parking brake release actuator will need to be released. Failure to follow this instruction may result in the parking brake to function incorrectly or become inoperative.

The warranty of the electric parking brake release tool will be invalidated if the casing has been removed.

All vehicles

**1.** WARNING: Always use the Jaguar Approved Diagnostic System to release the parking brake cable tension, when carrying out repair operations on the electric park brake which require the cable tension to be released.

Connect the Jaguar approved diagnostic system to release the parking brake cable tension.

WARNING: The procedure below should only be used in emergency situations, to release the electric parking brake. All calibration of the parking brake system will be lost, and the parking brake will need to be re-calibrated to function correctly.

• NOTE: The tools shown must only be used in the event of an emergency.

Vehicles with automatic transmission

**2.** Move the selector lever to the "P" position.

Vehicles with manual transmission

**3.** Move the gearshift lever into a forward gear position.

All vehicles

**4.** Release the parking brake.

Vehicles built up to 01/2004

**5.** Remove the luggage compartment floor covering.

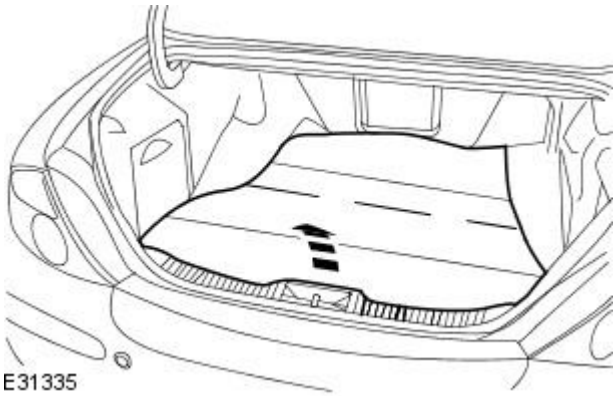

E31335

GETtheMANUALS.org

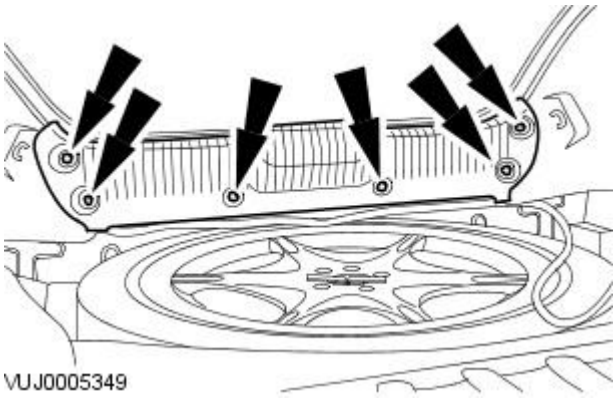


**6.** Remove the luggage compartment trim panel.

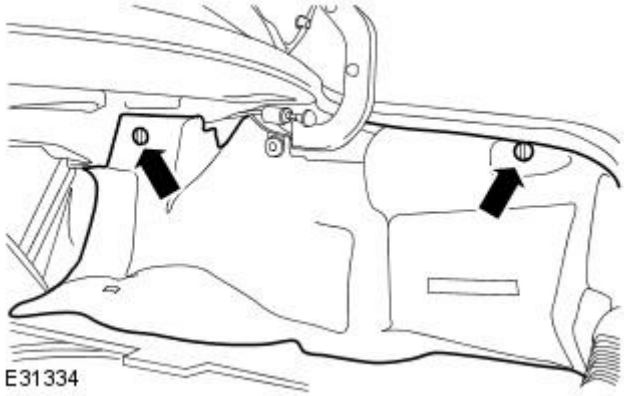


**7.** Remove the luggage compartment side trim panel.

- Remove the luggage compartment side trim panel retaining clips.

Vehicles built 02/2004 onwards

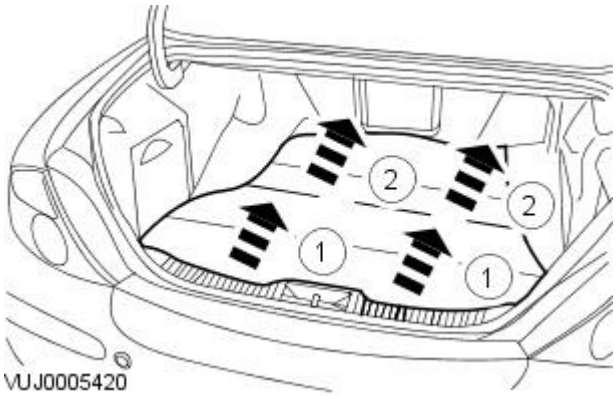


**8.** Reposition the luggage compartment floor covering.

1. Detach the luggage compartment floor covering.
2. Reposition the luggage compartment floor covering.

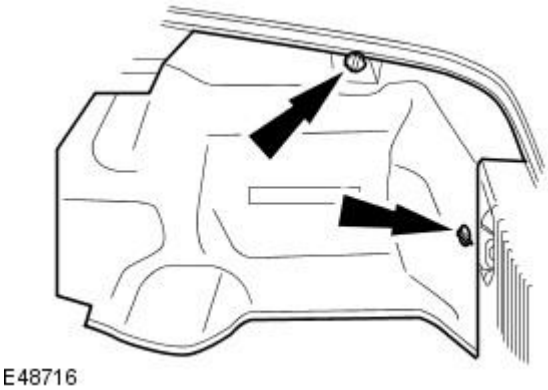


**9.** Detach the luggage compartment side trim panel and reposition to one side.

Vehicles built up to 01/2004

GETtheMANUALS.org

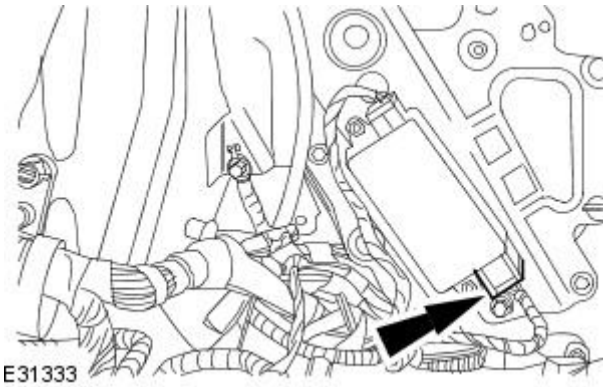


**10.** Disconnect the parking brake module electrical connector.

Vehicles built 02/2004 onwards

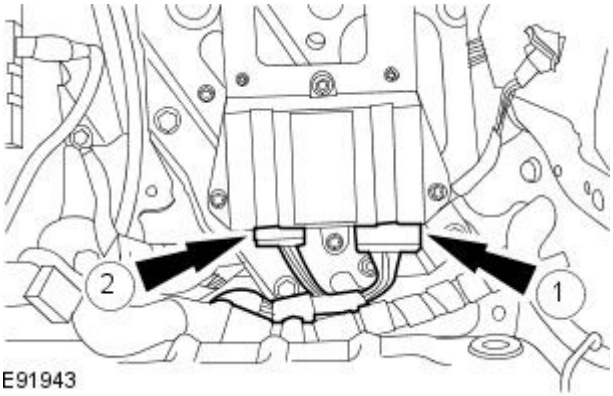


**11.** CAUTION: Disconnect the parking brake module electrical connectors in the sequence shown. Failure to follow this instruction may result in diagnostic trouble codes being stored in the module.

Disconnect the parking brake module electrical connectors.

Vehicles built up to 01/2004

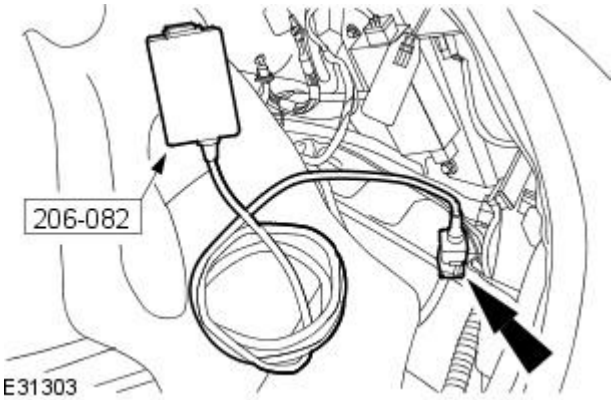


**12.** Connect the special tool to the parking brake module wiring harness electrical connector.

Vehicles built 02/2004 onwards

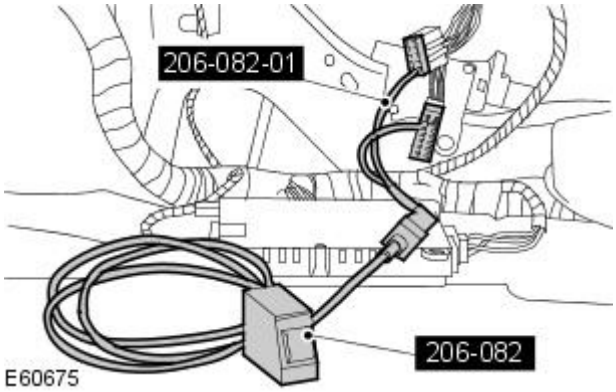


**13.** Connect the special tools to the parking brake module wiring harness electrical connectors.

All vehicles

GETtheMANUALS.org

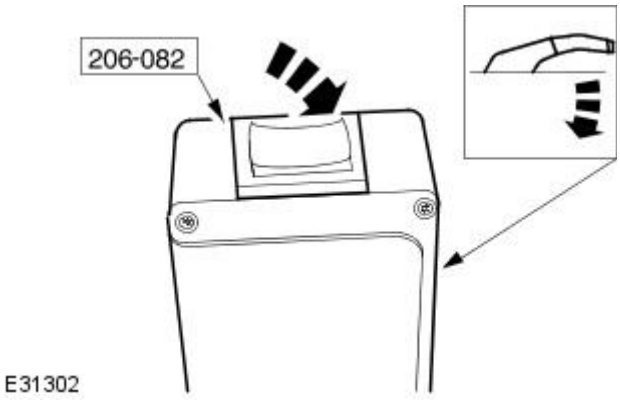


**14.** NOTE: Operate the parking brake release tool until an audible noise is heard from the parking brake release actuator.

Release the parking brake cable tension.

**15.** Remove the special tool and carry out any necessary repair to the system.

Vehicles built up to 01/2004

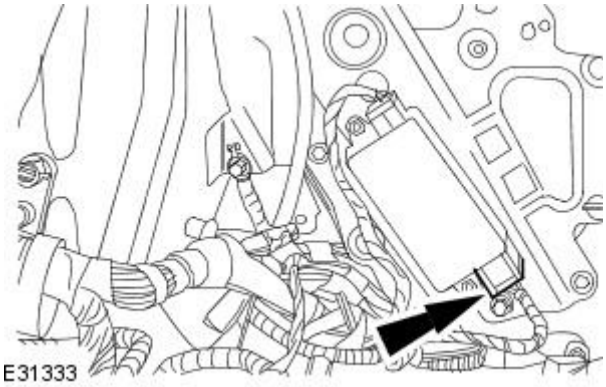


**16.** Connect the parking brake module electrical connector.

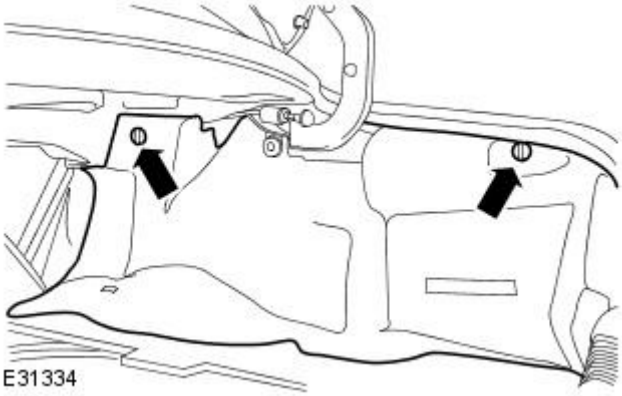


**17.** Install the luggage compartment side trim panel.

- Install the luggage compartment side trim panel retaining clips.

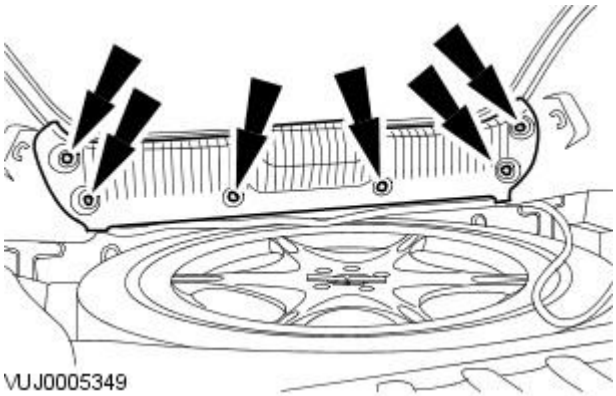


**18.** Install the luggage compartment trim panel.

Vehicles built 02/2004 onwards

GETtheMANUALS.org

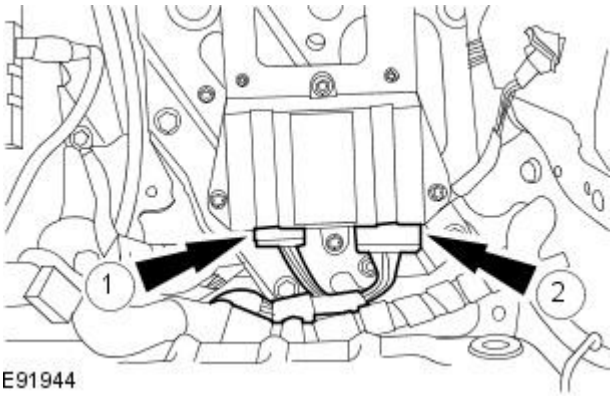

E91944

**19.** CAUTION: Connect the parking brake module electrical connectors in the sequence shown. Failure to follow this instruction may result in diagnostic trouble codes being stored in the module.

Connect the parking brake module electrical connectors.

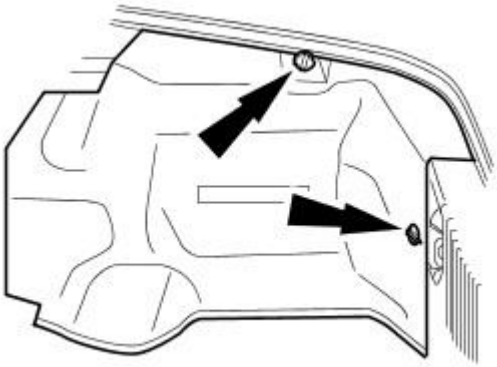
E48716

**20.** Attach the luggage compartment side trim panel.

All vehicles

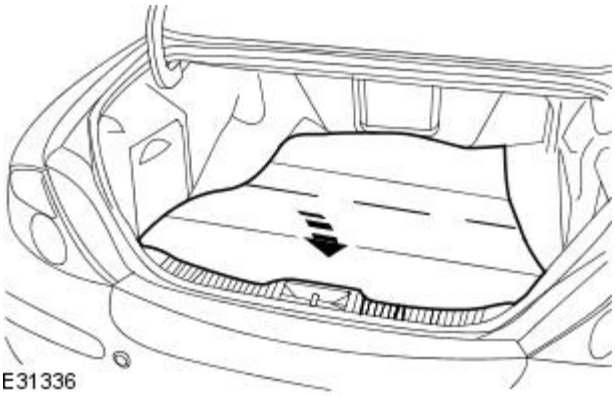
E31336

**21.** Install the luggage compartment floor covering.

**22.** NOTE: The brake pedal must be applied when calibrating the parking brake switch.

Apply the parking brake.

Vehicles with manual transmission

**23.** Move the gearshift lever to the "Neutral" position.

All vehicles

**24.** CAUTION: Calibrate the electric park brake using Jaguar approved diagnostic system. If the Jaguar approved diagnostic system is not available disconnect the battery for approximately 30 seconds, the vehicle will then prompt the driver to carry out the calibration procedure as per the vehicle hand book on re-connection.

Calibrate the electric parking brake module using the Jaguar approved diagnostic system.

GETtheMANUALS.org

# Parking Brake and Actuation - Parking Brake Cable

Removal and Installation

## Removal

1. Carry out the parking brake cable release.
   For additional information, refer to Parking Brake Cable Tension Release in this section.
2. Remove both rear wheels and tires.
   For additional information, refer to Section 204-04 Wheels and Tires.
3. Detach the parking brake cable.
   1. Reposition the parking brake caliper lever.
   2. Detach the parking brake cable.

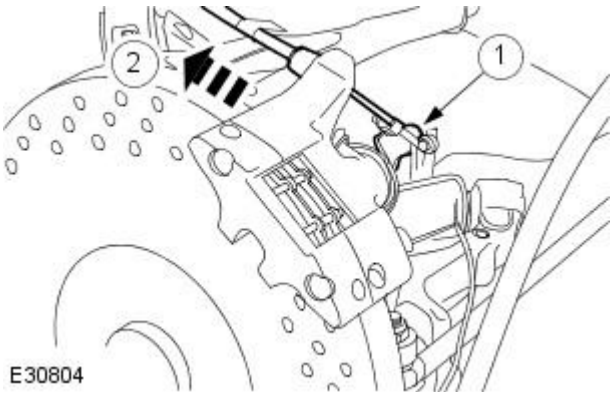


4. Detach the parking brake cable.
   1. Reposition the retaining tang.
   2. Detach the parking brake cable.

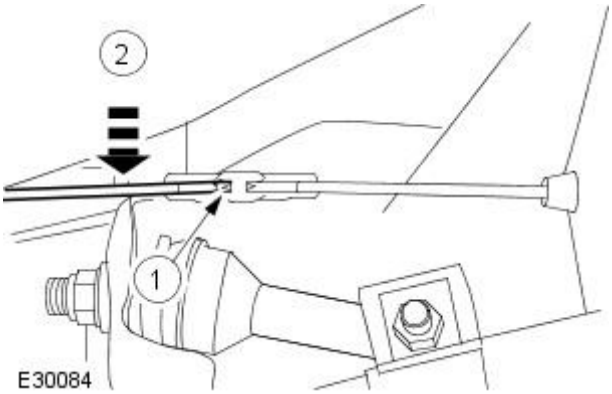


5. Remove the parking brake cable.
   1. Detach the parking brake cable retaining tangs.
   2. Remove the parking brake cable.

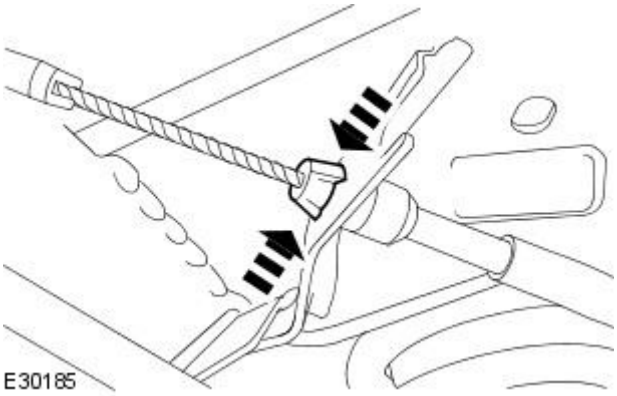


## Installation

1. NOTE: Install a new parking brake cable retaining bracket.

   To install, reverse the removal procedure.

GETtheMANUALS.org

# Parking Brake and Actuation - Parking Brake Module

Removal and Installation

## Removal

All vehicles

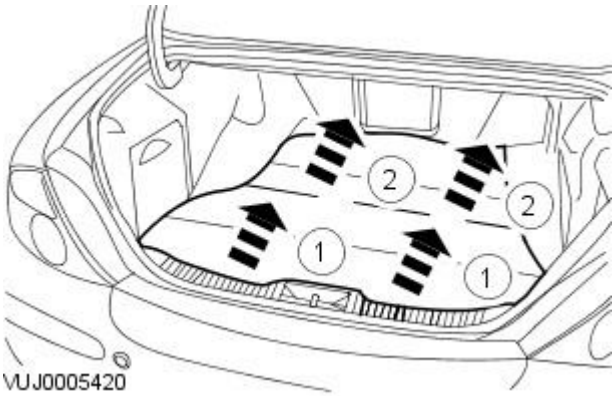


**1.** Remove the luggage compartment floor covering.

1. Detach the luggage compartment floor covering.
2. Reposition the luggage compartment floor covering.

Vehicles built up to VIN:N13088

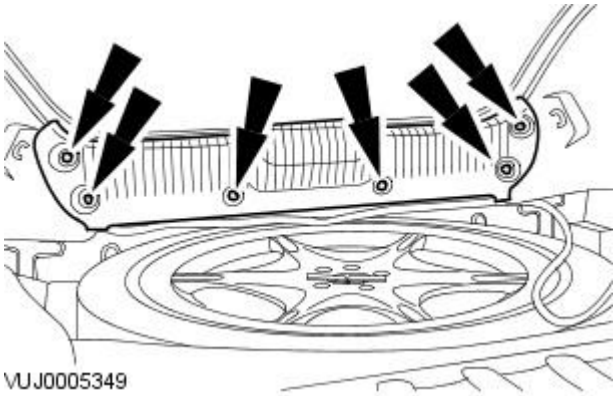


**2.** Remove the luggage compartment trim panel.

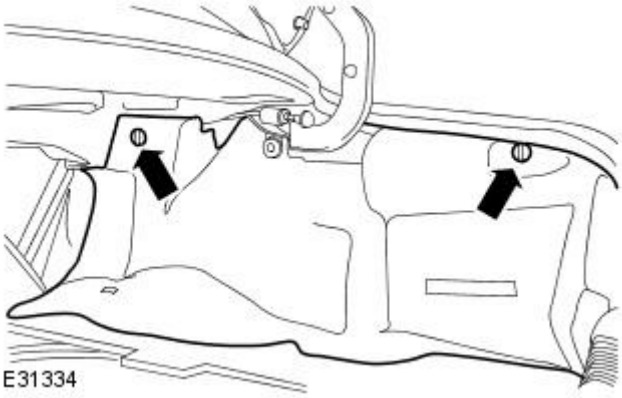


**3.** Remove the luggage compartment side trim panel.

- Remove the luggage compartment side trim panel retaining clips.

Vehicles built from VIN:N13089

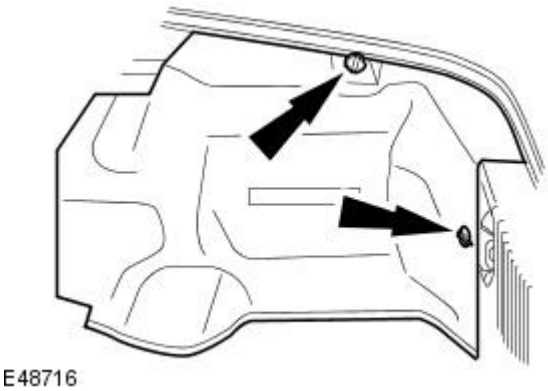


**4.** Detach the luggage compartment side trim panel and reposition to one side.

GETtheMANUALS.org

Vehicles built up to VIN:N13088

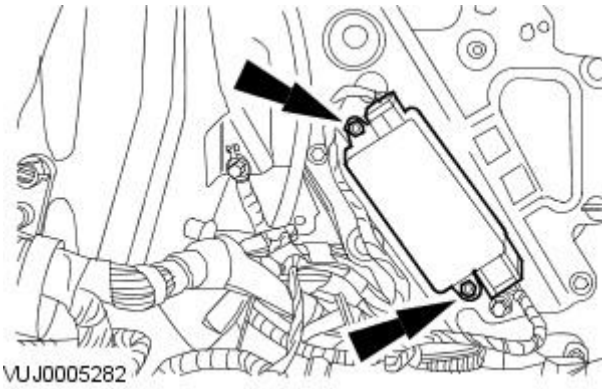


**5.** Detach the parking brake module.

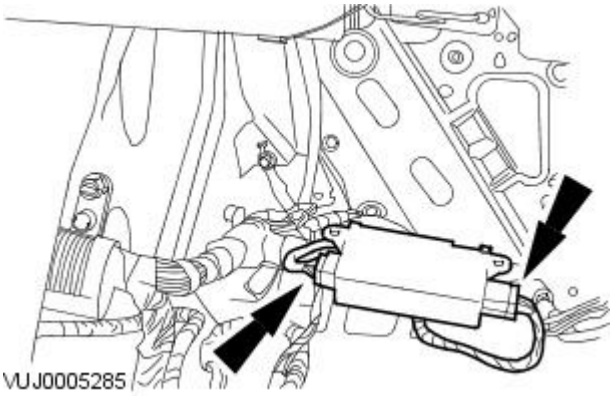


**6.** Remove the parking brake module.

- Disconnect the parking brake module electrical connectors.

Vehicles built from VIN:N13089

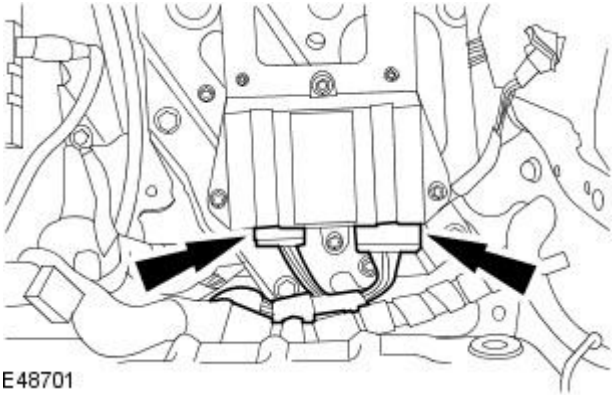


**7.** Disconnect the parking brake module electrical connectors.

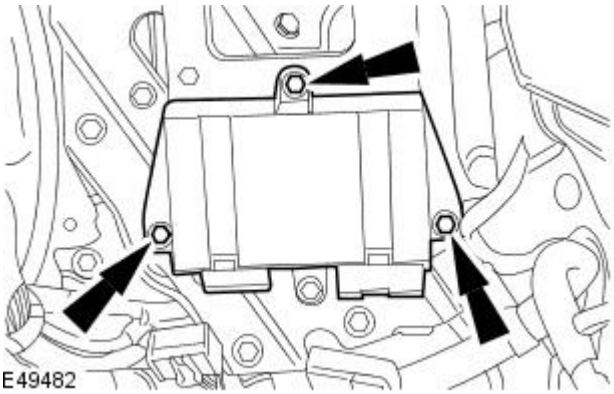


**8.** Remove the parking brake module.

## Installation

• NOTE: If a new parking brake module is installed it must be configured using the Jaguar approved diagnostic system.

**1.** To install, reverse the removal procedure.

GETtheMANUALS.org

# Parking Brake and Actuation - Parking Brake PadsVehicles With: High Performance Brakes

Removal and Installation

| Special Tool(s) | |
|---|---|
| 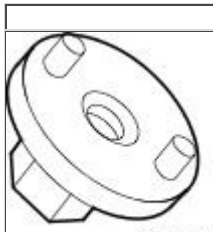 206-081 | Brake caliper piston retractor tool<br><br>206-081 |

## Removal

1. Carry out the parking brake cable tension release.
   For additional information, refer to: Parking Brake Cable Tension Release (206-05 Parking Brake and Actuation, General Procedures).
2. Remove both rear wheels and tires.
   For additional information, refer to: Wheel and Tire (204-04 Wheels and Tires, Removal and Installation).
3. Detach the parking brake cable.
   1. Reposition the parking brake caliper lever.
   2. Detach the parking brake cable.

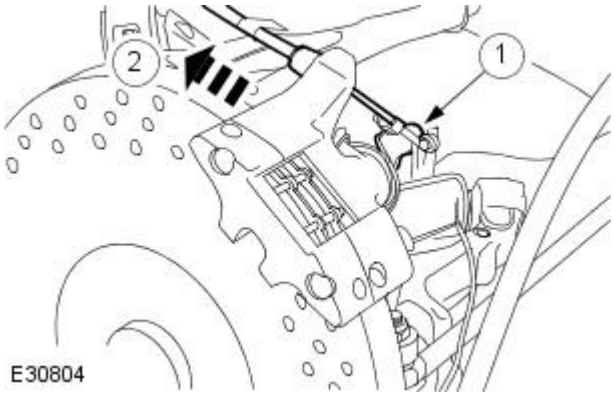


4. Remove the parking brake pads.
   1. Remove the parking brake pad retaining pins.
   2. Remove the parking brake pad anti-rattle spring plate.
   3. Remove the parking brake pads.

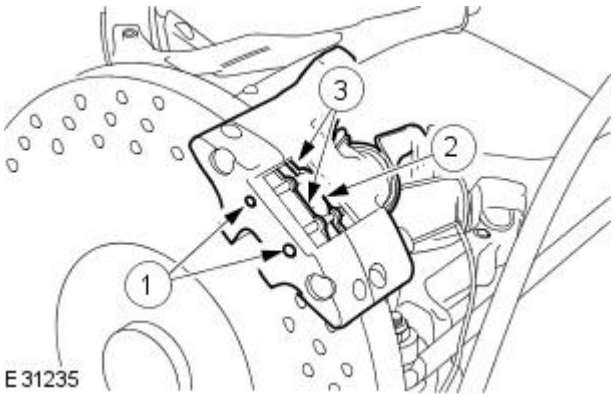


5. Remove the parking brake caliper.
   - Remove and discard the parking brake caliper retaining bolts.

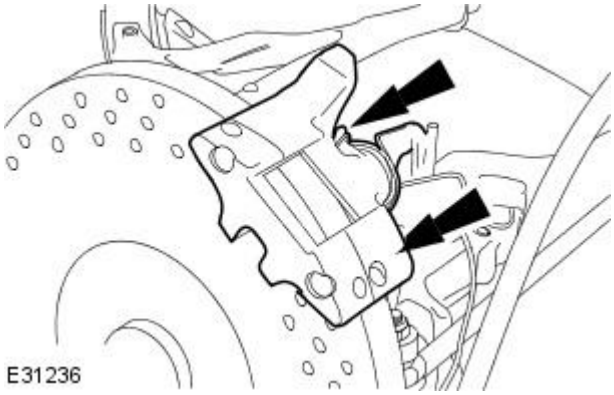


## Installation

1. CAUTIONS:

   Make sure the brake disc faces are clean before installation.

GETtheMANUALS.org

   Brake pads must always be replaced in axle sets.

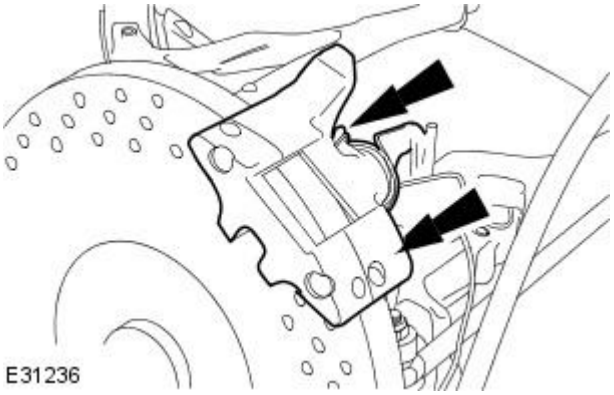


Install new parking brake caliper retaining bolts.

• NOTE: Using a suitable tool, fully retract the parking brake caliper pistons.

To install, reverse the removal procedure.

**2.** Tighten to 70 Nm.

GETtheMANUALS.org

# Parking Brake and Actuation - Parking Brake Release Actuator

Removal and Installation

| Special Tool(s) | |
|---|---|
| 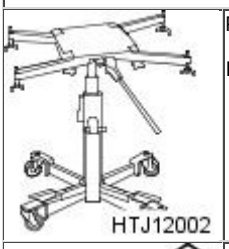  | Powertrain assembly jack<br><br>HTJ1200-2 |
| 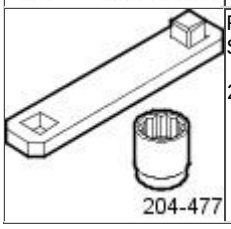  | Replacer - Mounting Bolts Final Drive To Subframe.<br><br>204-477 |

## Removal

• NOTE: Procedure is for both federal and non federal markets. Please refer to the relevant steps where appropriate.

1. Carry out the parking brake cable tension release.
   For additional information, refer to: Parking Brake Cable Tension Release (206-05 Parking Brake and Actuation, General Procedures).
2. Raise and support the vehicle.
   For additional information, refer to: Lifting (100-02 Jacking and Lifting, Description and Operation).
3. Disconnect the parking brake release actuator electrical connector.

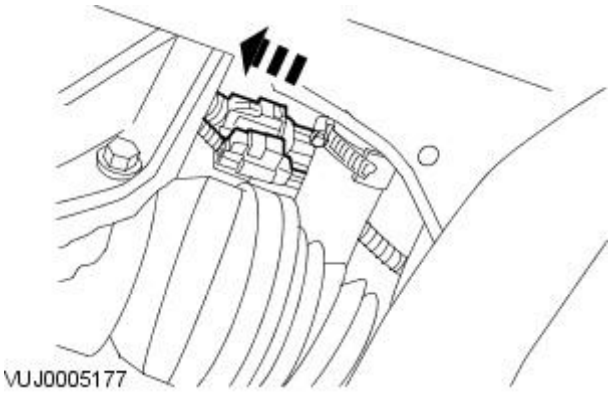


4. Remove the parking brake release actuator retaining bolts.

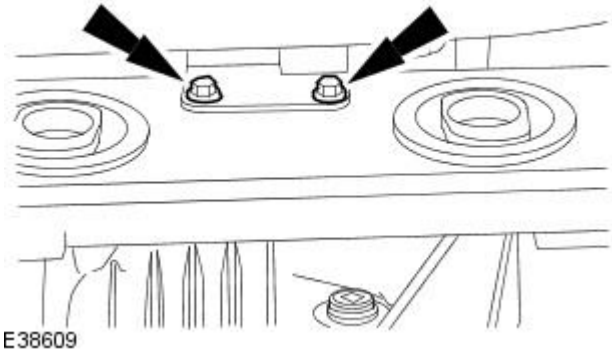


5. Detach the parking brake release actuator cable.
   1. For right-hand side connector bracket:
      1. Reposition the retaining tang.
      2. Detach the parking brake cable.
   2. For left-hand side reaction bracket, detach the parking brake cable.

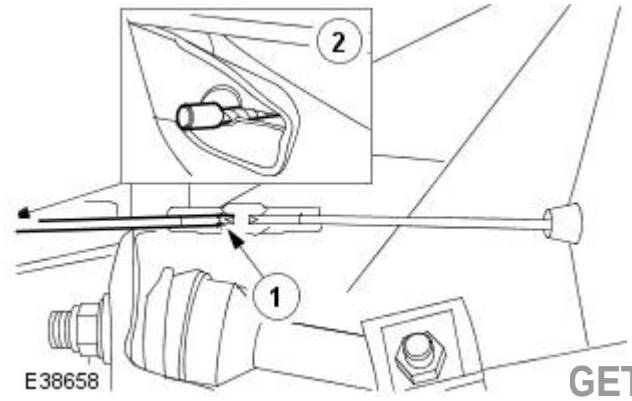


GETtheMANUALS.org

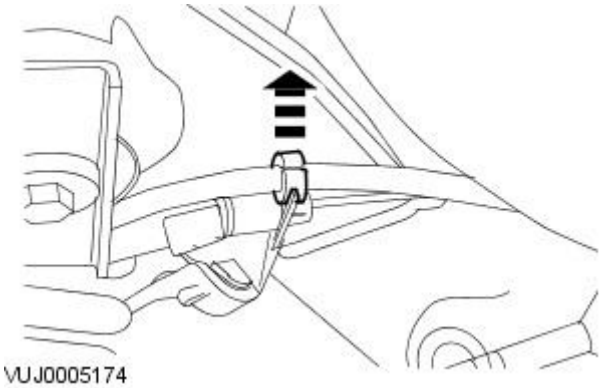


**6.** NOTE: Note the fitted position.

Detach the parking brake release actuator cable.

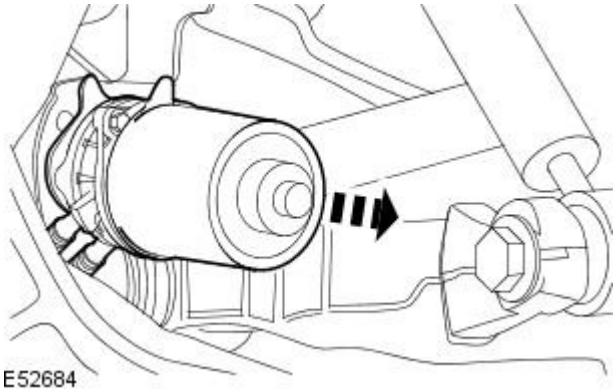


**7.** NOTE: Non federal market vehicles only.

Remove the parking brake actuator assembly toward the right-hand rear wheel.

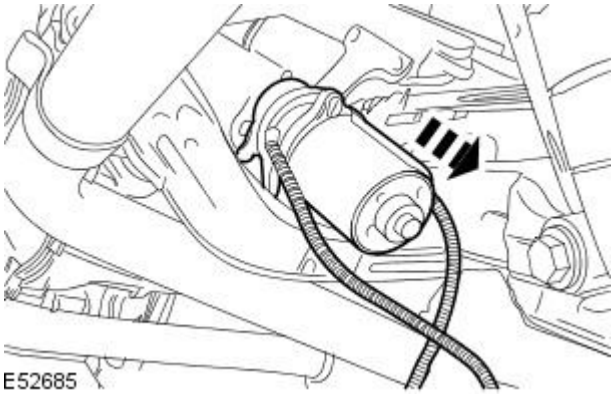


**8.** NOTE: Non federal market vehicles only.

Remove the parking brake release actuator assembly.

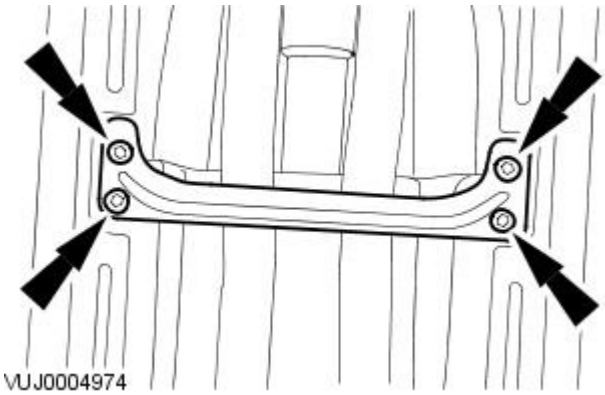


**9.** NOTE: Federal market vehicles only.

Remove the support bracket.

- Remove the bolts.

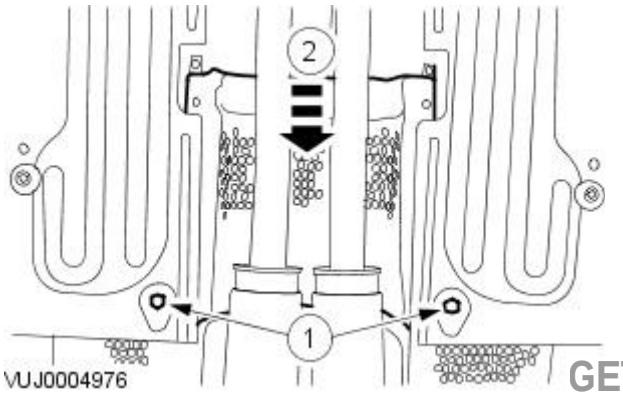


**10.** NOTE: Federal market vehicles only.

Reposition the driveshaft heat shield.

1. Remove the retaining bolts.
2. Reposition the driveshaft heat shield.

GETtheMANUALS.org

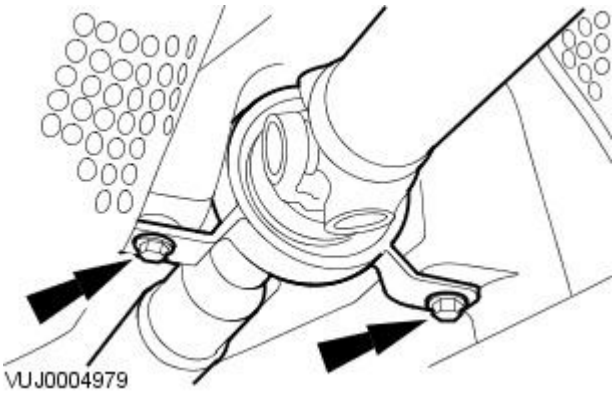


**11.** NOTE: Federal market vehicles only.

Release the driveshaft centre bearing.

- Remove the retaining bolts.
- Remove the spacers.

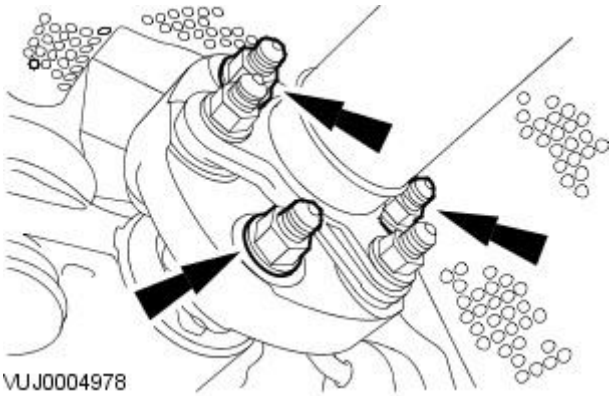


**12.** CAUTION: Under no circumstances must the flexible coupling (or its fixings) be loosened or removed from the driveshaft.

• NOTE: Federal market vehicles only.

Detach the driveshaft from the differential flange.

- Mark the position of the driveshaft in relation to the differential flange.
- Mark the position of the balance nut in relation to the differential flange (if fitted).
- Mark the position of each nut and bolt in relation to the driveshaft flexible joint.

**13.** CAUTION: When supporting the axle assembly, use suitable packing material to prevent damage to the axle assembly.

• NOTE: Federal market vehicles only.

Support the axle assembly using special tool HTJ1200-02.

**14.** NOTE: Federal market vehicles only.

Release the axle assembly.

- Remove the retaining bolts.

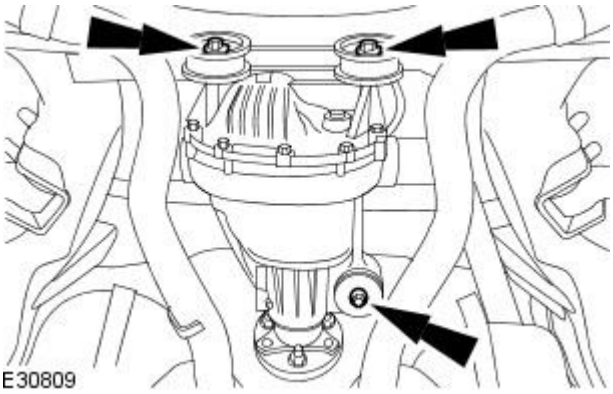


**15.** CAUTION: Make sure the halfshafts remain clear of the rear suspension/subframe.

• NOTE: Federal market vehicles only.

Lower the axle assembly.

**16.** NOTE: Federal market vehicles only.

Remove the parking brake actuator.

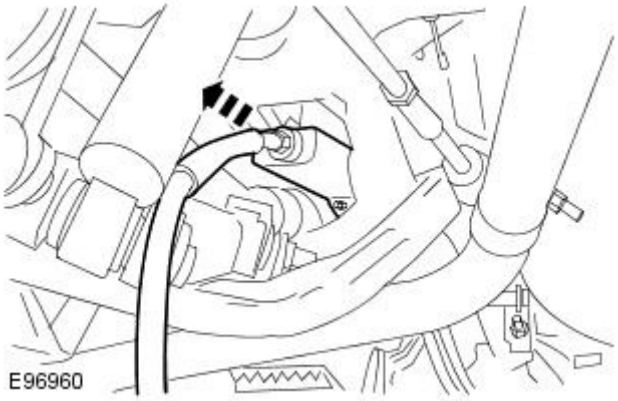


GETtheMANUALS.org

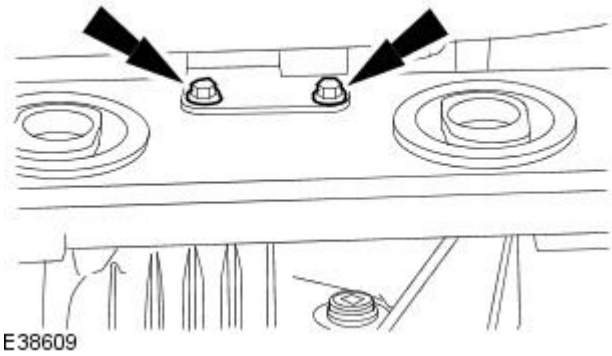


**1.** NOTE: Make sure the parking brake cable is correctly routed.

To install, reverse the removal procedure.

- Tighten to 20 Nm.

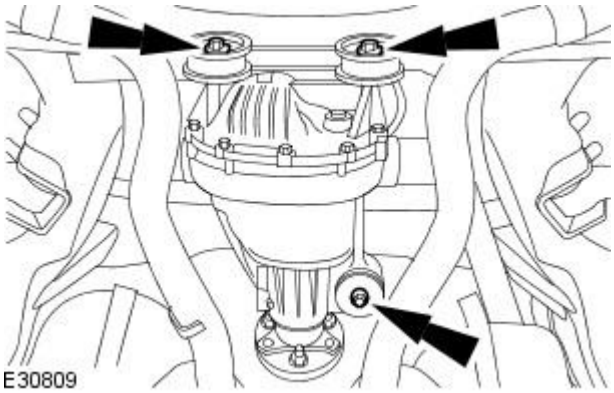


**2.** NOTE: Federal market vehicles only.

• NOTE: Loosely tighten the axle assembly rear retaining bolts.

Install the axle assembly.

**3.** NOTE: Federal market vehicles only.

Remove the special tool HTJ1200-02, supporting the axle assembly.

**4.** NOTE: Federal market vehicles only.

Install the special tool.

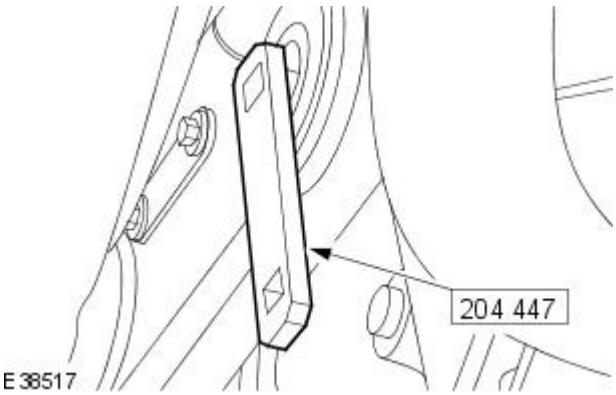


**5.** NOTE: Federal market vehicles only.

Using the special tool and a torque wrench, tighten the axle rear retaining bolts.

- Tighten to 200 Nm.
- To make sure the axle rear retaining bolts are torqued to the correct specification, using the special tool and a torque wrench the following calculation steps must be followed.
    1. Step 1. Multiply 200 Nm by the effective length of the torque wrench (1).
    2. Step 2. Add the effective length of the special tool (2) to the effective length of the torque wrench (1).
    3. Step 3. Divide the total of step 1 by the total of step 2.
    4. Step 4. Set the torque wrench to the figure arrived at in step 3.

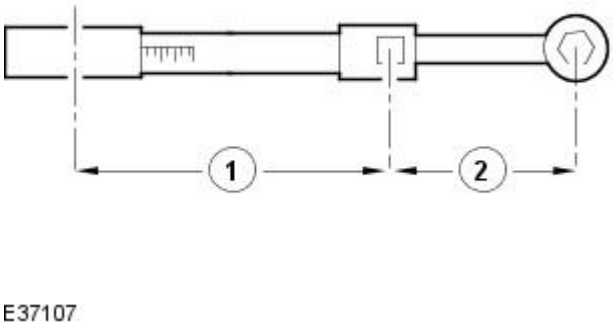


GETtheMANUALS.org

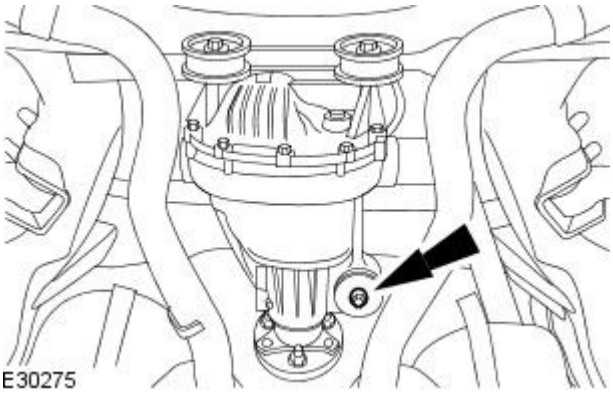


**6.** NOTE: Federal market vehicles only.

Tighten to 90 Nm.

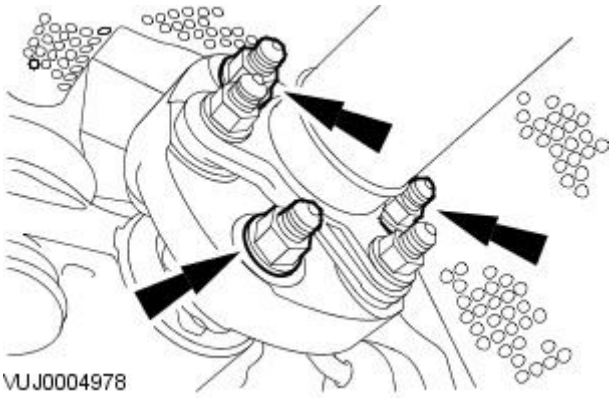


**7.** NOTE: Federal market vehicles only.

Tighten to 88 Nm.

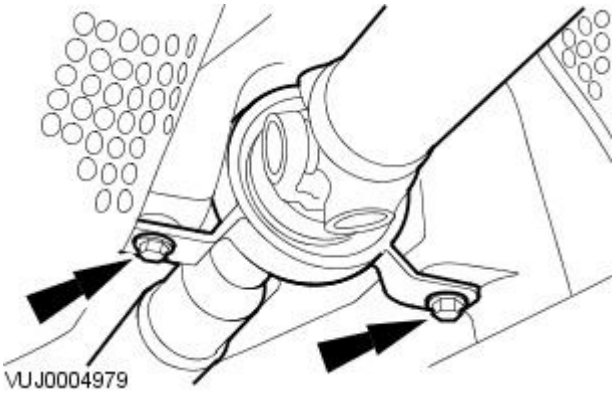


**8.** NOTE: Federal market vehicles only.

• NOTE: Do not fully tighten the driveshaft centre bearing retaining bolts at this stage.

Tighten the driveshaft centre bearing retaining bolts.

- Install the driveshaft centre bearing spacers.

**9.** NOTE: Federal market vehicles only.

Carry out the Driveline Angle Inspection.
For additional information, refer to: Driveline Angle Inspection (205-00 Driveline System - General Information, General Procedures).

**10.** CAUTION: Calibrate the electric park brake using Jaguar approved diagnostic system. If the Jaguar approved diagnostic system is not available disconnect the battery for approximately 30 seconds, the vehicle will then prompt the driver to carry out the calibration procedure as per the vehicle hand book on re-connection.

Calibrate the electric parking brake module using the Jaguar approved diagnostic system.

GETtheMANUALS.org

# Parking Brake and Actuation - Parking Brake Switch

Removal and Installation

## Removal

Vehicles with manual transmission

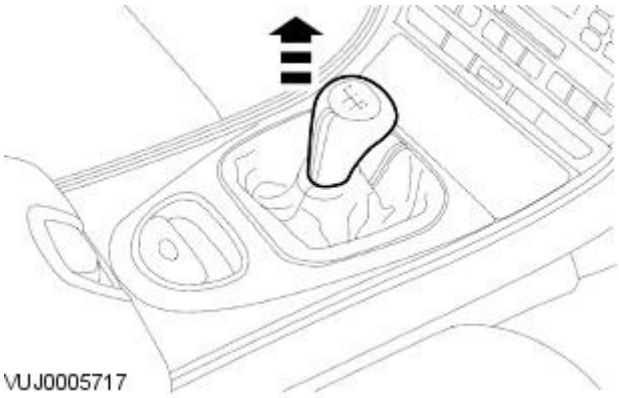


1. Remove the gearshift lever.

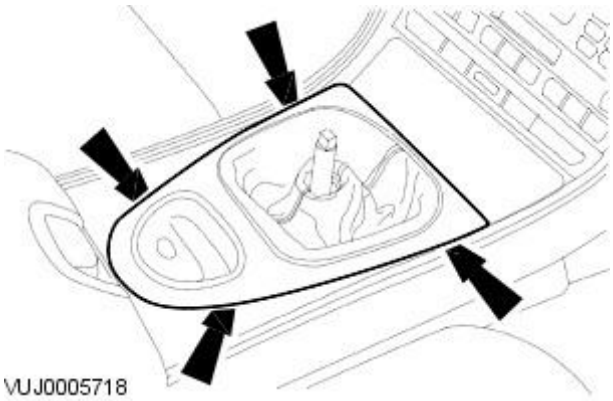


2. Remove the gearshift lever trim cover.

Vehicles with automatic transmission

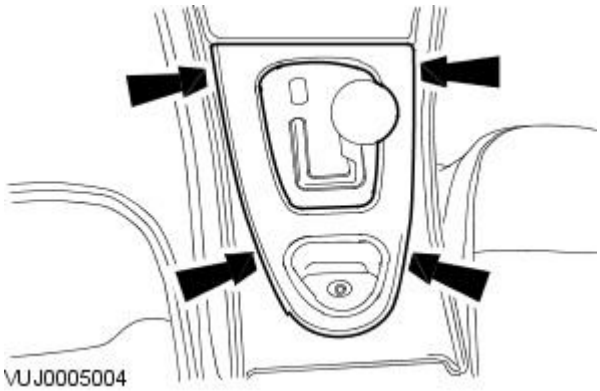


3. Remove the 'J' gate surround.

All vehicles

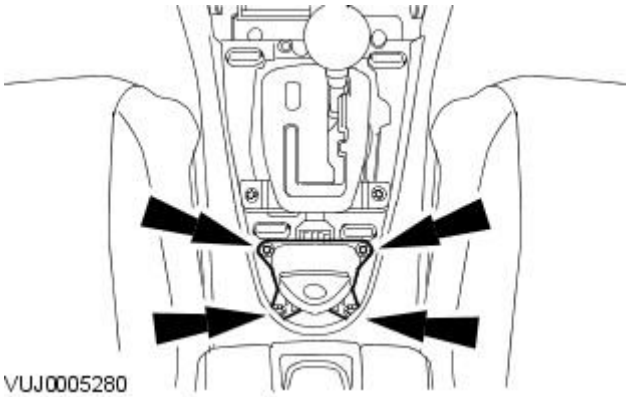


4. Remove the parking brake switch retaining screws.

GETtheMANUALS.org

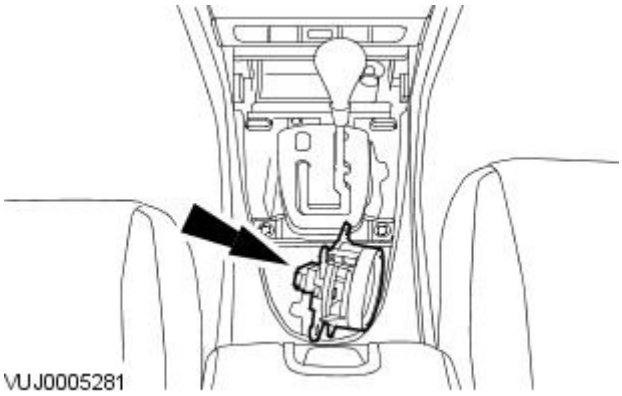


**5.** Remove the parking brake switch.

## Installation

**1.** To install, reverse the removal procedure.

GETtheMANUALS.org

# Hydraulic Brake Actuation -

**Lubricants, Fluids, Sealers and Adhesives**

CAUTION: Do not use brake fluid ITT Super Dot 4 on 2006my vehicles onwards. Failure to follow this instruction may result in damage to the vehicle.

• NOTE: Brake fluid ITT Super Dot 4 has now been superseded by Shell ESL Super Dot 4 which is the Jaguar recommended brake fluid. Shell ESL Super Dot 4 can be used on all model years.

| Item | Specification |
|---|---|
| Brake fluid | ITT Super Dot 4 |
| Brake fluid | Shell ESL Super Dot 4 |

**Torque Specifications**

| Description | Nm | lb-ft | lb-in |
|---|---|---|---|
| Brake master cylinder to brake booster retaining nuts. | 25 | 18 | - |
| HCU to brake master cylinder brake tubes | 17 | 13 | - |
| Brake master cylinder reservoir retaining bolts | 8 | - | 71 |

GETtheMANUALS.org

# Hydraulic Brake Actuation - Hydraulic Brake Actuation

Description and Operation

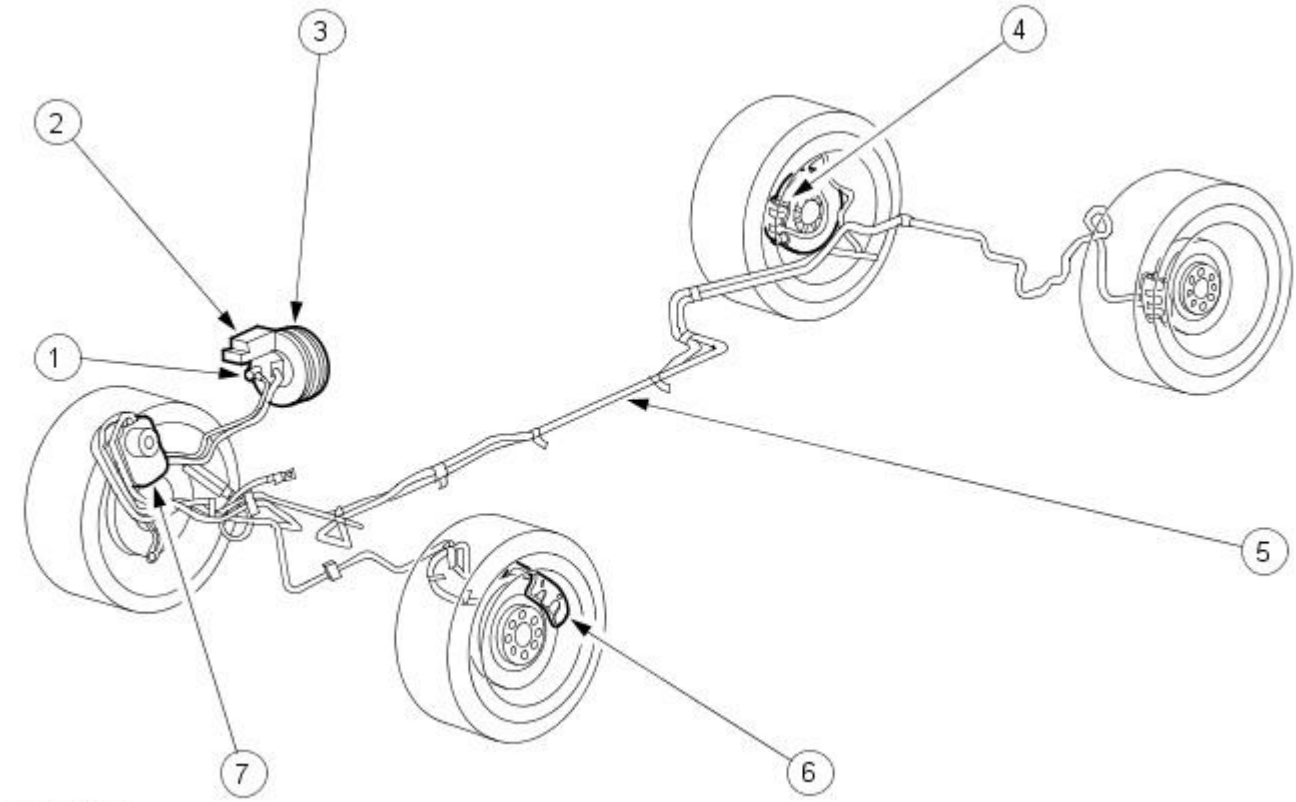


VUJ0000453

| Item | Part Number | Description |
|---|---|---|
| 1 | — | Brake master cylinder |
| 2 | — | Brake fluid reservoir |
| 3 | — | Brake booster |
| 4 | — | Rear brake caliper |
| 5 | — | Brake lines |
| 6 | — | Front brake caliper |
| 7 | — | Hydraulic control unit |

WARNING: Brake fluid contains polyglycol ethers and polyglycols. Avoid contact with the eyes. Wash hands thoroughly after handling, as prolonged contact may cause irritation and dermatitis. If brake fluid contacts the eyes, flush the eyes with cold water or eyewash solution and seek medical attention. If taken internally, do not induce vomiting, seek immediate medical attention. Failure to follow these instructions may result in personal injury.

The hydraulic brake system is of a pedal operated, diagonally split dual line brake system that consists of the following components:

- A brake booster.
- A brake master cylinder.
- Front brake discs.
- Front brake disc calipers.
- Rear brake discs.
- Rear brake disc calipers.
- Brake tubes and hoses.
- Anti-lock brake system (ABS).

## Brake Master Cylinder

The brake master cylinder is a dual piston type. The master cylinder operates as follows:

- When the brake pedal is applied, pressure is applied by mechanical linkage to the primary and secondary systems.
- Brake master cylinder pistons apply hydraulic pressure to the two circuits.

The master cylinder consists of the following components:

- Primary and secondary pistons.
- Brake master cylinder fluid reservoir with integral fluid level warning indicator.

## Adjustable Pedals

The adjustable pedal system comprises of a throttle pedal assembly with an adjustment motor and drive cables. The drive cables are attached to the brake and clutch adjustment mechanisms. The pedals move forward and rearward together. Two seperate pedal positions can be set and stored in the memory for driver recall. The pedal position adjustment is by a switch fitted on the steering column shroud.

GETtheMANUALS.org

Published: 11-May-2011

# Hydraulic Brake Actuation - Hydraulic Brake Actuation

Diagnosis and Testing

For additional information, refer to Section 206-00 Brake System - General Information.

GETtheMANUALS.org

# Hydraulic Brake Actuation - Brake Fluid ReservoirV8 4.2L Petrol/V8 S/C 4.2L Petrol/2.5L NA V6 - AJV6/3.0L NA V6 - AJ27

Removal and Installation

## Removal

All vehicles

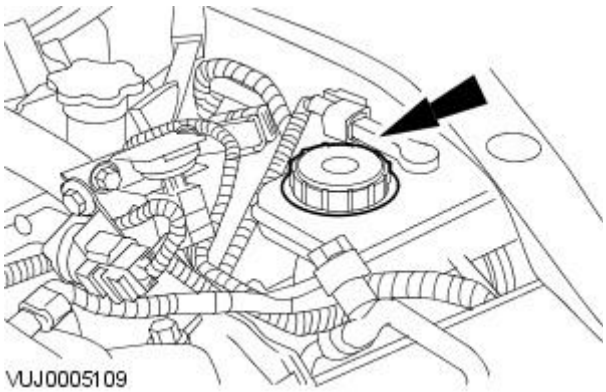


**1.** CAUTION: If brake fluid is spilt on the paintwork, the affected area must be immediately washed down with cold water.

• NOTE: Make sure the brake fluid reservoir filler cap does not become contaminated.

Remove the brake fluid reservoir filler cap.

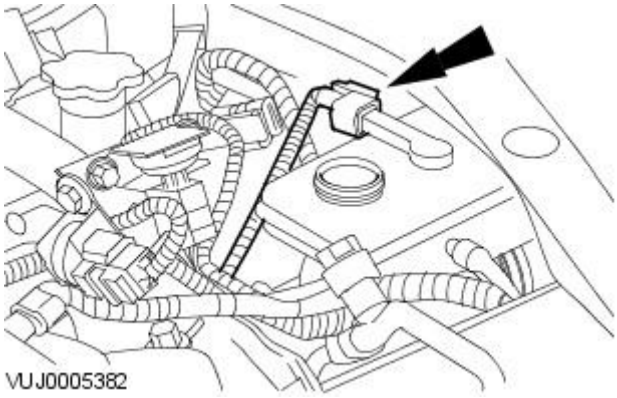


**2.** Disconnect the brake fluid level sensor electrical connector.

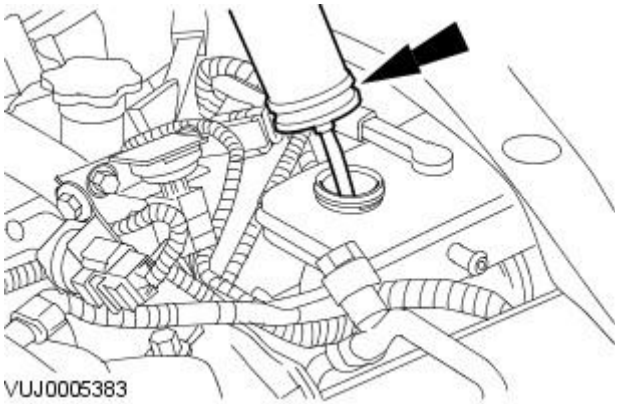


**3.** Using a suitable suction device drain the brake fluid reservoir.

Vehicles with manual transmission

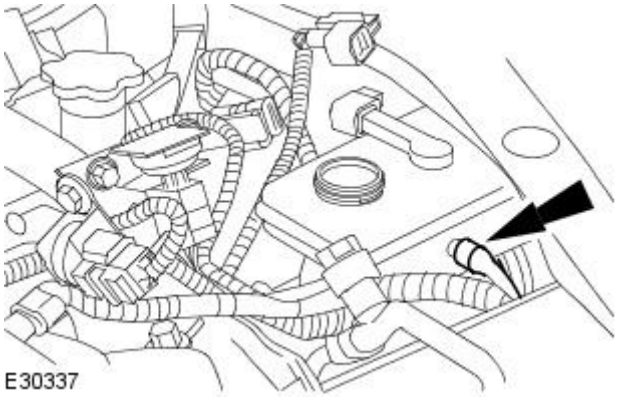


**4.** Disconnect the clutch master cylinder feed hose.

All vehicles

GETtheMANUALS.org

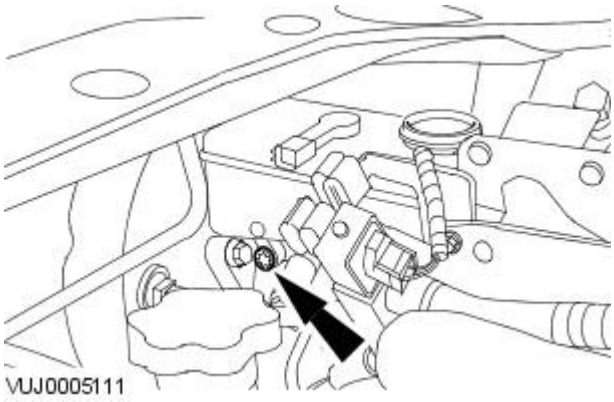


**5.** Remove the brake fluid reservoir from the master cylinder.

1. Remove the brake fluid reservoir retaining bolt.
2. Remove the brake fluid reservoir from the brake master cylinder.

## Installation

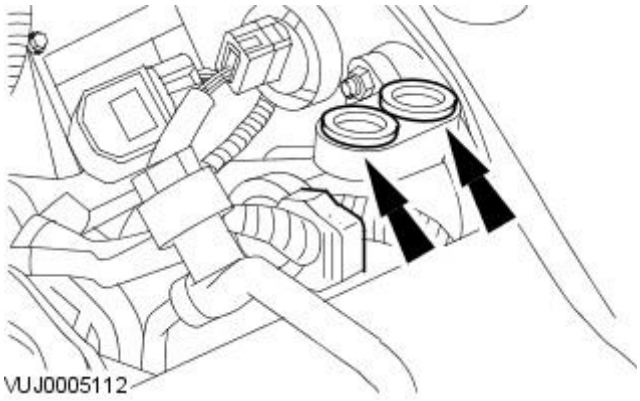


**1.** NOTE: Install new O-ring seals.

To install, reverse the removal procedure.

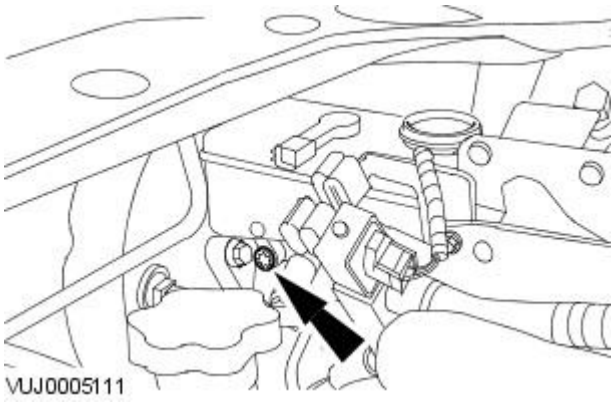


**2.** Tighten to 8 Nm.

**3.** After installation, bleed the brake system. For additional information, refer to Section 206-00 Brake System - General Information

GETtheMANUALS.org

# Hydraulic Brake Actuation - Brake Fluid Reservoir2.7L V6 - TdV6

Removal and Installation

## Removal

All vehicles

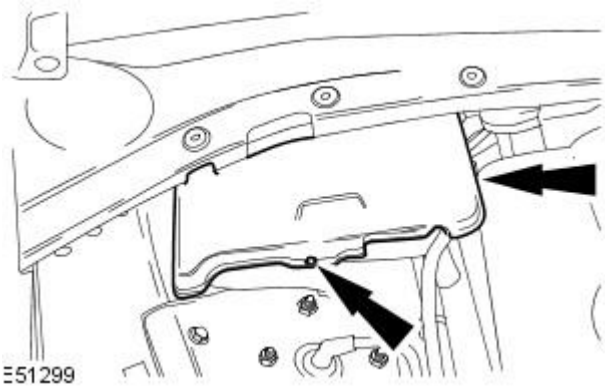


**1.** Remove the engine compartment cover.

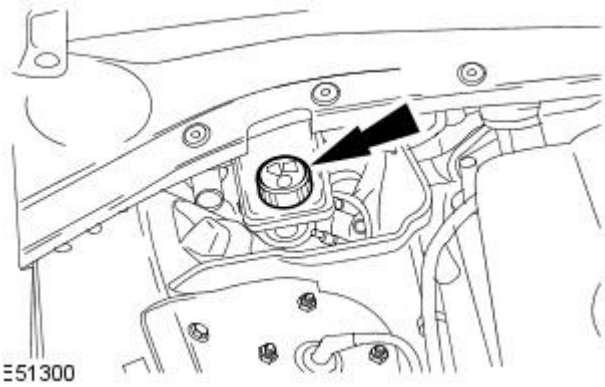


**2.** CAUTION: If brake fluid is spilt on the paintwork, the affected area must be immediately washed down with cold water.

• NOTE: Make sure the brake fluid reservoir filler cap does not become contaminated.

Remove the brake fluid reservoir filler cap.

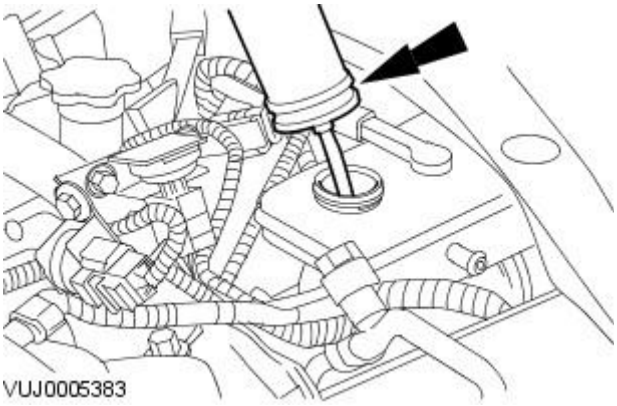


**3.** Using a suitable suction device drain the brake fluid reservoir.

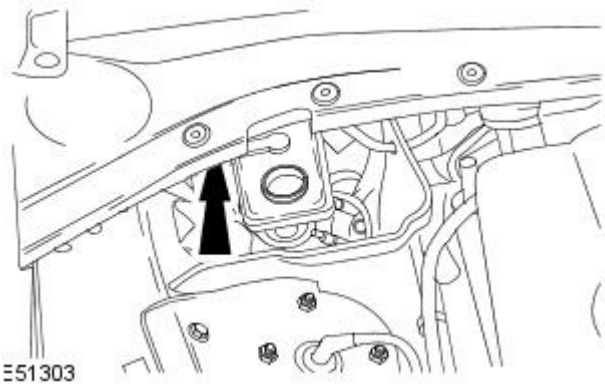


**4.** Disconnect the brake fluid level sensor electrical connector.

Vehicles with manual transmission

GETtheMANUALS.org

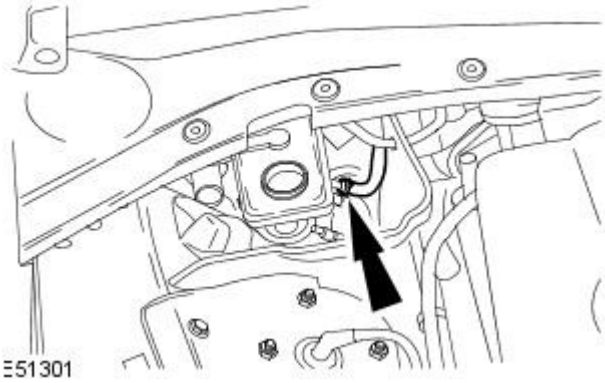


**5.** Disconnect the clutch master cylinder feed hose.

All vehicles

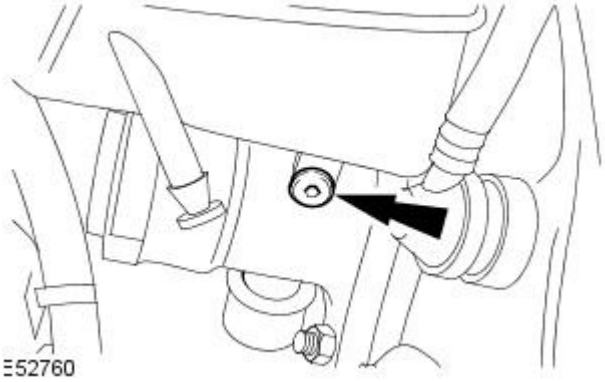


**6.** Remove the brake fluid reservoir.

- Remove the brake fluid reservoir retaining bolt.
- Detach the brake fluid reservoir from the brake master cylinder.

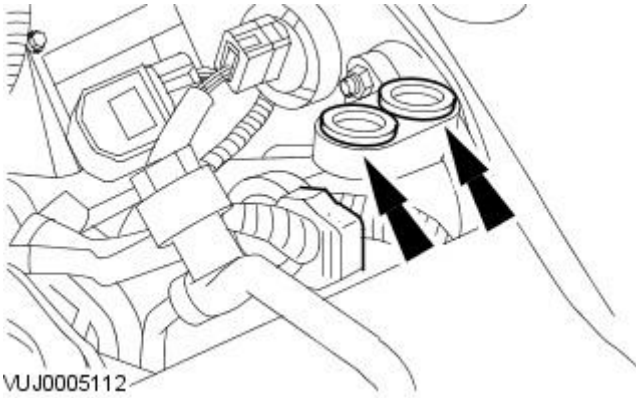


**7.** Remove and discard the O-ring seals.

## Installation

All vehicles

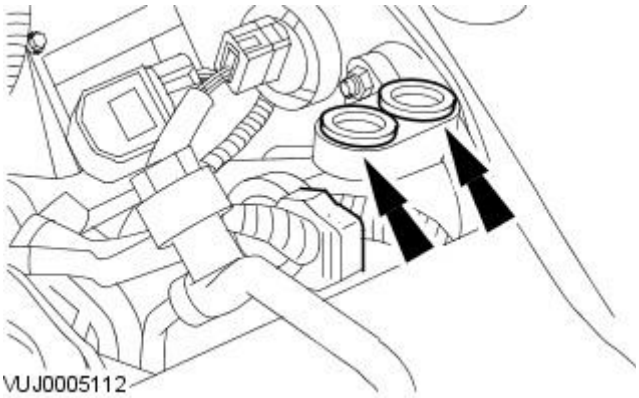


**1.** NOTE: Lubricate the new O-ring seals with clean brake fluid.

Install new O-ring seals.

GETtheMANUALS.org

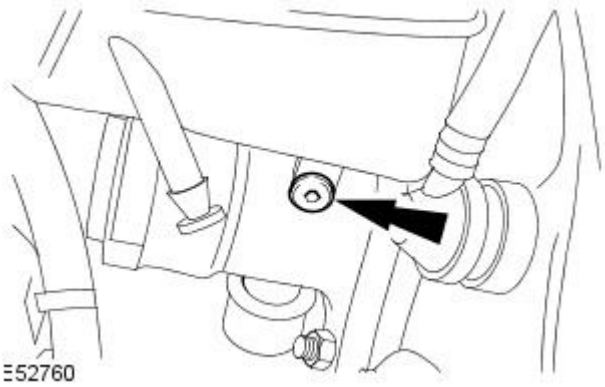


2. Install the brake fluid reservoir.
   - Attach the brake fluid reservoir to the brake master cylinder.
   - Install the brake fluid reservoir retaining bolt.
   - Tighten to 8 Nm.

Vehicles with manual transmission

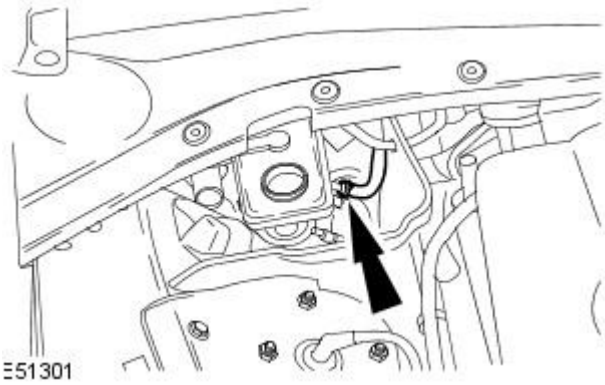


3. Connect the clutch master cylinder feed hose.

All vehicles

4. Bleed the brake hydraulic system.
   For additional information, refer to: Brake System Bleeding - VIN Range: M45255->N52047 (206-00 Brake System - General Information, General Procedures).

Vehicles with manual transmission

5. Bleed the clutch hydraulic system.
   For additional information, refer to: Clutch System Bleeding (308-00 Manual Transmission/Transaxle and Clutch - General Information, General Procedures).

GETtheMANUALS.org

# Hydraulic Brake Actuation - Brake Master CylinderV8 4.2L Petrol / V8 S/C 4.2L Petrol / 2.5L NA V6 - AJV6 / 3.0L NA V6 - AJ27

Removal and Installation

## Removal

**1.** CAUTION: If brake fluid comes into contact with the paintwork, the affected area must be immediately washed down with cold water.

• NOTE: Make sure the brake fluid reservoir filler cap does not become contaminated.

Remove the brake fluid reservoir.
For additional information, refer to Brake Fluid Reservoir in this section.

**2.** Remove the brake booster/vacuum pipe.

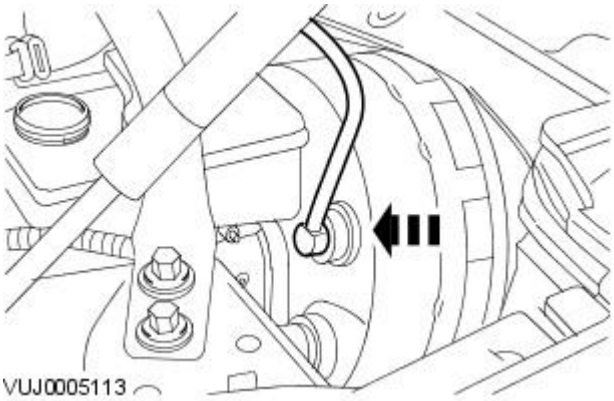


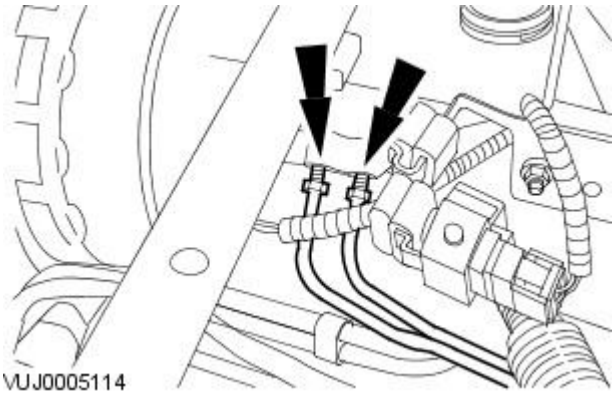


**3.** CAUTION: Cap the brake hose to prevent loss of fluid and dirt ingress.

Disconnect the master cylinder brake pipes.

**4.** Remove the dynamic stability control sensor electrical connector.

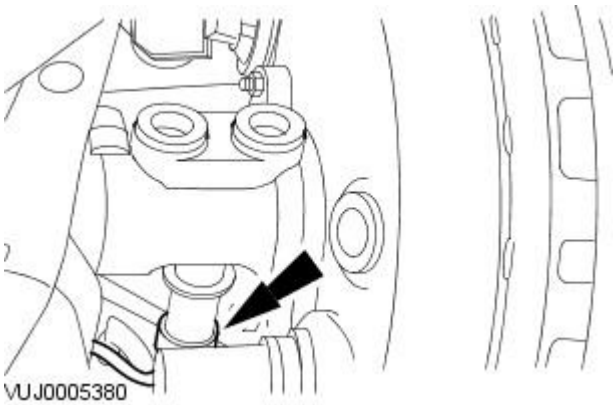


**5.** Remove the dynamic stability control sensor.

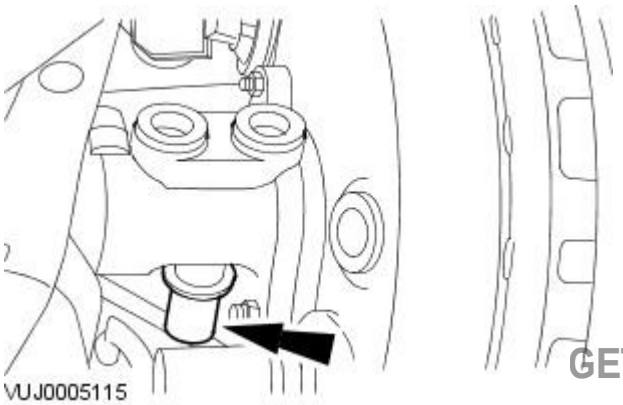


GETtheMANUALS.org

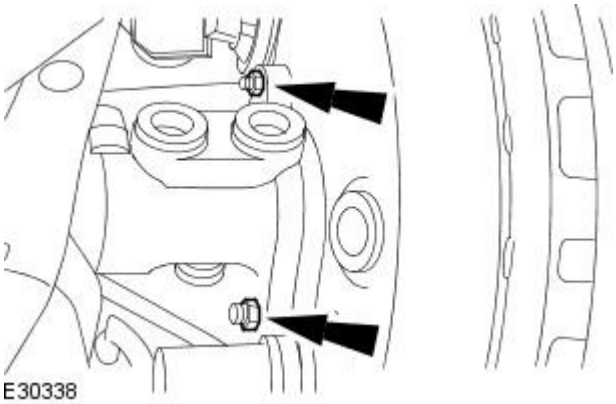


**6.** Remove the brake master cylinder.

## Installation

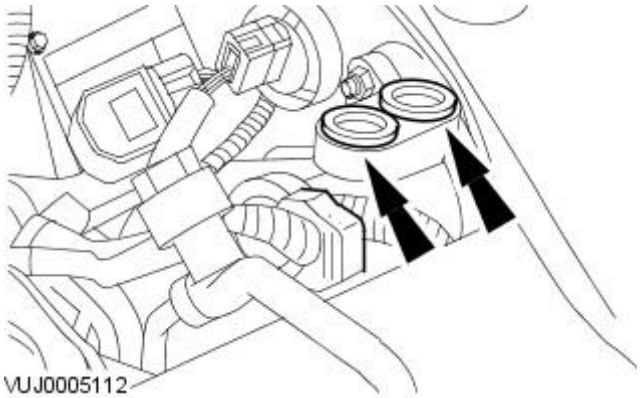


**1.** NOTE: Install new O-ring seals.

To install, reverse the removal procedure.

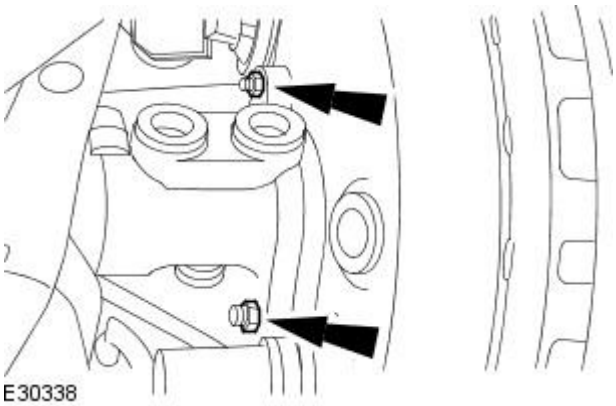


**2.** Tighten to 25 Nm.

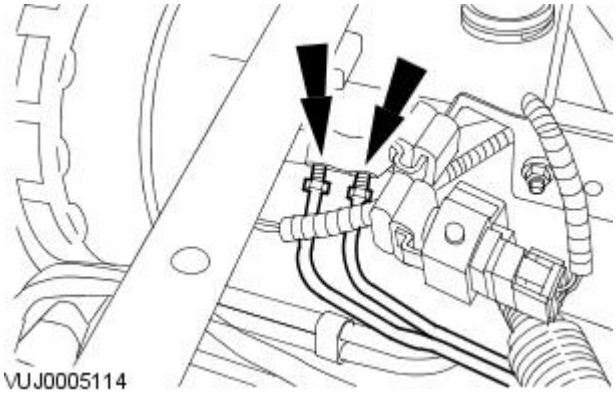


**3.** Tighten to 17 Nm.

**4.** Bleed the brake system.
For additional information, refer to Section 206-00 Brake System - General Information.

GETtheMANUALS.org

# Hydraulic Brake Actuation - Brake Master Cylinder2.7L V6 - TdV6

Removal and Installation

## Removal

**1.** CAUTION: If brake fluid comes into contact with the paintwork, the affected area must be immediately washed down with cold water.

• NOTE: Make sure the brake fluid reservoir filler cap does not become contaminated.

Remove the brake fluid reservoir.
For additional information, refer to: Brake Fluid Reservoir - V8 4.2L Petrol/V8 S/C 4.2L Petrol/2.5L NA V6 - AJV6/3.0L NA V6 - AJ27 (206-06 Hydraulic Brake Actuation, Removal and Installation).

**2.** CAUTION: Cap the brake hose to prevent loss of fluid and dirt ingress.

Disconnect the master cylinder brake pipes.

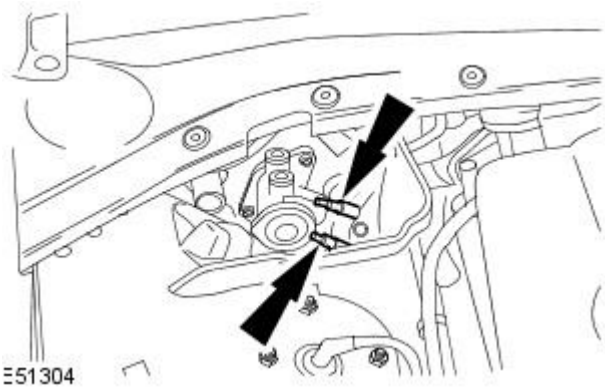


**3.** Remove the brake master cylinder retaining nuts.

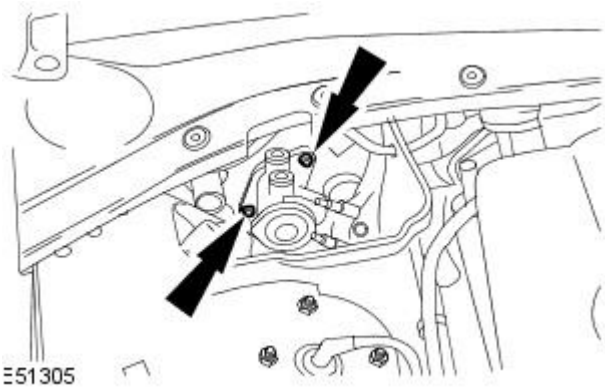


**4.** Remove the brake master cylinder.

- Remove the brake master cylinder primary pressure transducer electrical connector.

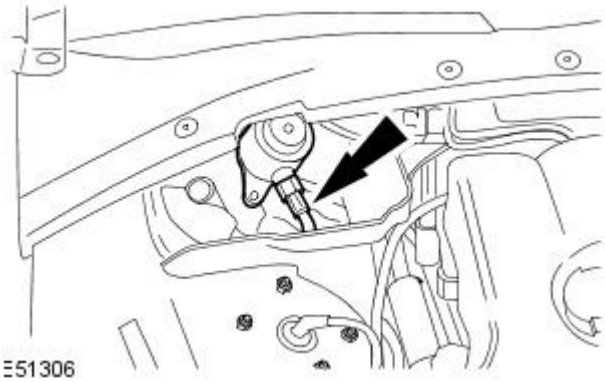


## Installation

GETtheMANUALS.org

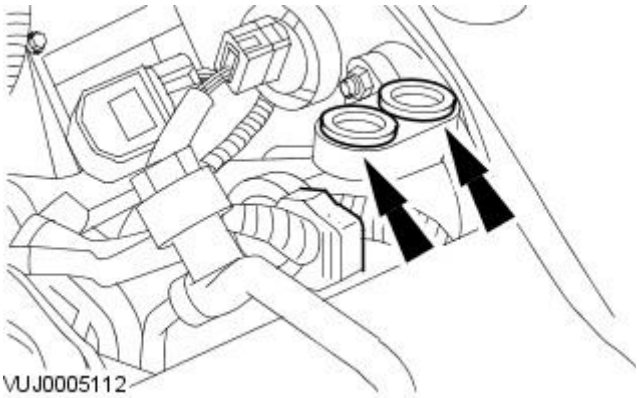


**1.** NOTE: Install new O-ring seals.

To install, reverse the removal procedure.

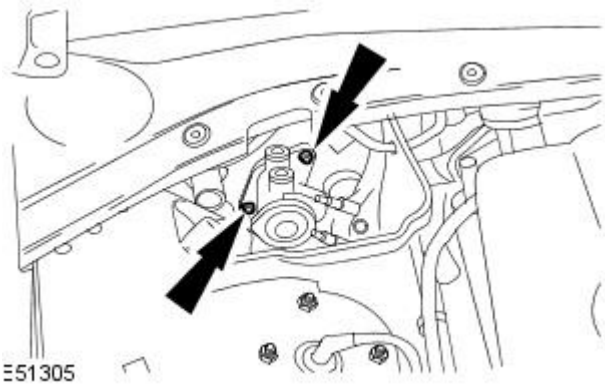


**2.** Tighten to 25 Nm.

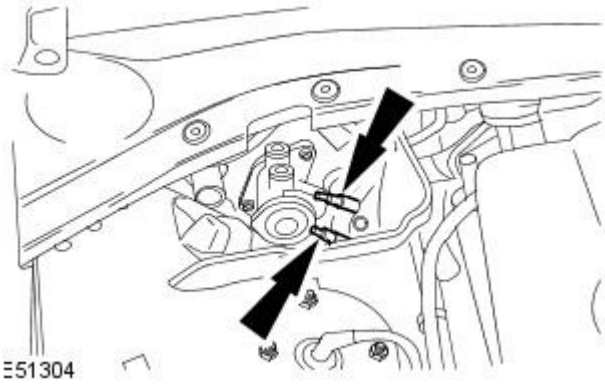


**3.** Tighten to 17 Nm.

GETtheMANUALS.org

# Power Brake Actuation -

**Torque Specifications**

| Description | Nm | lb-ft | lb-in |
|---|---|---|---|
| Brake booster retaining nuts | 25 | 18 | - |
| Brake vacuum pump retaining bolts | 23 | 17 | - |
| Brake vacuum pump retaining stud | 13 | 10 | - |
| Brake vacuum pump retaining nut | 13 | 10 | - |

GETtheMANUALS.org

# Power Brake Actuation - Brake Booster

Description and Operation

WARNING: Brake fluid contains polyglycol ethers and polyglycols. Avoid contact with the eyes. Wash hands thoroughly after handling, as prolonged contact may cause irritation and dermatitis. If brake fluid contacts the eyes, flush the eyes with cold water or eyewash solution and seek medical attention. If taken internally, do not induce vomiting, seek immediate medical attention. Failure to follow these instructions may result in personal injury.

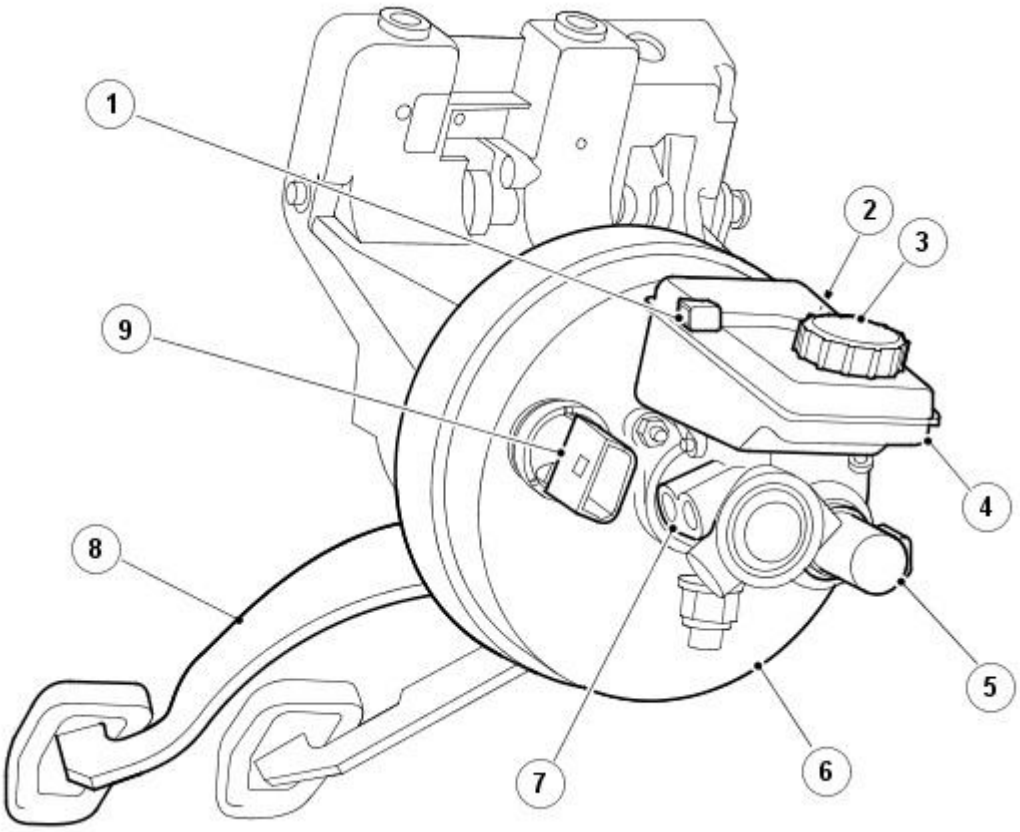


E64135

| Item | Part Number | Description |
|---|---|---|
| 1 | — | Brake fluid level sensor |
| 2 | — | Non return valve/vacuum supply |
| 3 | — | Brake fluid reservoir cap |
| 4 | — | Brake fluid reservoir |
| 5 | — | Brake master cylinder active booster solenoid (Vehicles built up to VIN:N52206) |
| 5 | — | Brake vacuum sensor (3.0L Vehicles built after VIN:N52207) |
| 6 | — | Brake booster |
| 7 | — | Brake master cylinder |
| 8 | — | Brake pedal |
| 9 | — | Brake pedal travel sensor |

The diaphragm-type power brake booster:

- Is self-contained.
- Is mounted on the engine side of the bulkhead.
- Uses engine intake manifold vacuum and atmospheric pressure for its assistance.
- Utilizes a non-return valve to preserve vacuum.

GETtheMANUALS.org

Published: 11-May-2011

# Power Brake Actuation - Power Brake System

Diagnosis and Testing

For additional information, refer to Section 206-00 Brake System - General Information.

GETtheMANUALS.org

# Power Brake Actuation - Brake Booster

Removal and Installation

## Removal

All vehicles

1. Remove the brake master cylinder.
   For additional information, refer to: Brake Master Cylinder - V8 4.2L Petrol/V8 S/C 4.2L Petrol/2.5L NA V6 - AJV6/3.0L NA V6 - AJ27 (206-06 Hydraulic Brake Actuation, Removal and Installation).
2. Remove the cowl panel grille.
   For additional information, refer to: Cowl Panel Grille (501-02 Front End Body Panels, Removal and Installation).

Vehicles built up to VIN:N52206

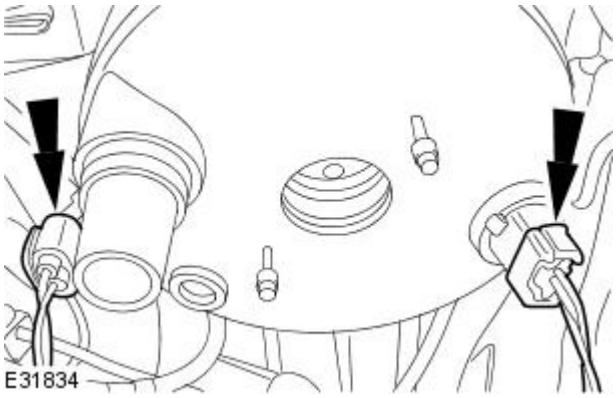


3. Disconnect the brake booster pedal travel sensor and brake booster solenoid electrical connectors.

Vehicles built from VIN:N52207

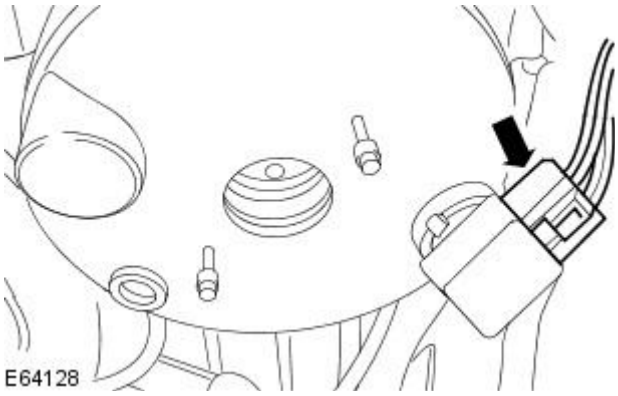


4. NOTE: **Vehicles with 3.0L engines only.**

   Disconnect the brake booster vacuum electrical connector.

Vehicles with diesel engine

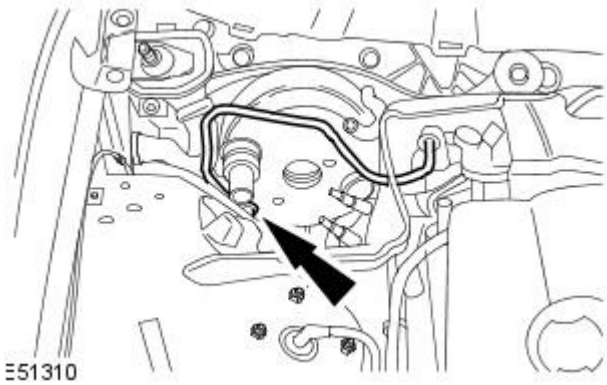


5. Detach the brake booster vacuum pipe.

All vehicles

GETtheMANUALS.org

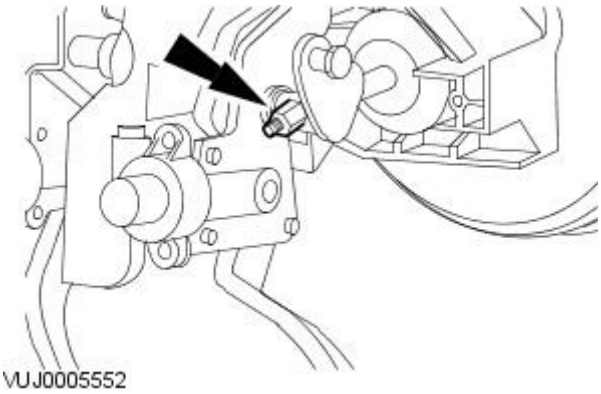


**6.** Remove the brake booster retaining nut.

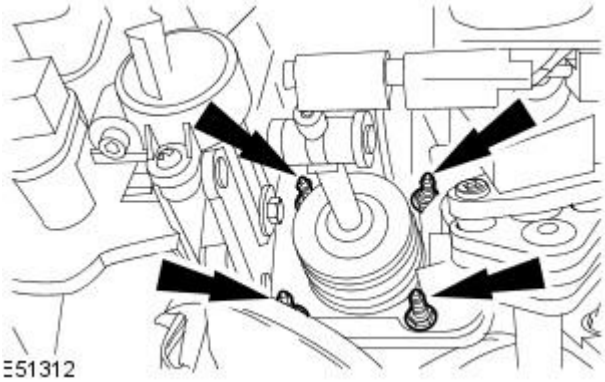


**7.** NOTE: The non-return valve and vacuum pipe assembly should be removed with the brake booster.

Remove the brake booster retaining nuts.

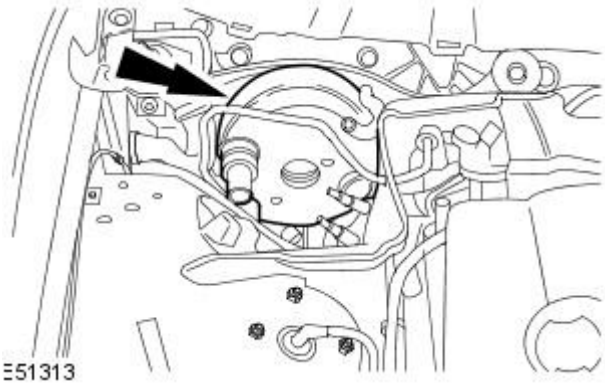


**8.** Remove the brake booster.

## Installation

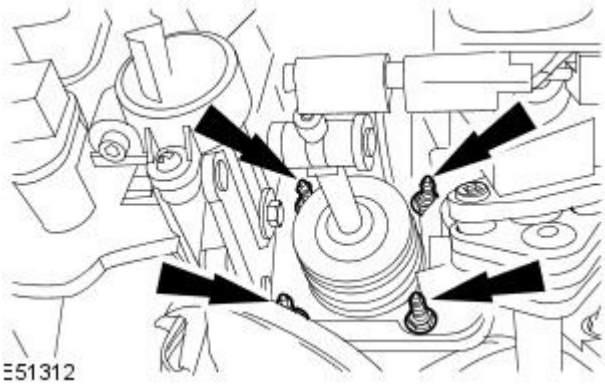


**1.** NOTE: When renewing the brake booster, the non-return valve and vacuum pipe assembly should be installed prior to the brake booster installation.

• NOTE: Replace the brake booster/pedal box gasket.

To install, reverse the removal procedure.

- Tighten to 25 Nm.

GETtheMANUALS.org

# Power Brake Actuation - Brake Vacuum Pump2.7L V6 - TdV6

Removal and Installation

## Removal

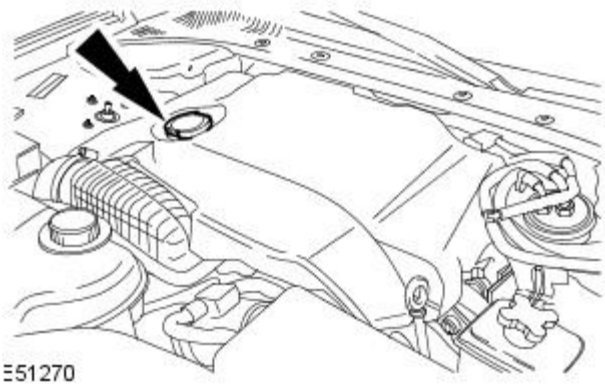


**1.** Remove the oil filler cap.

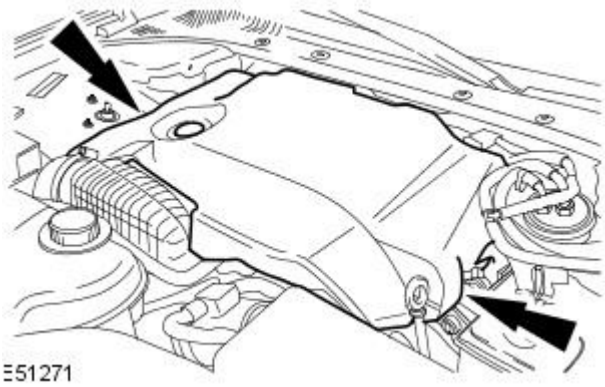


**2.** Remove the engine cover.

**3.** Remove the cowl panel grille.
For additional information, refer to: Cowl Panel Grille (501-02 Front End Body Panels, Removal and Installation).

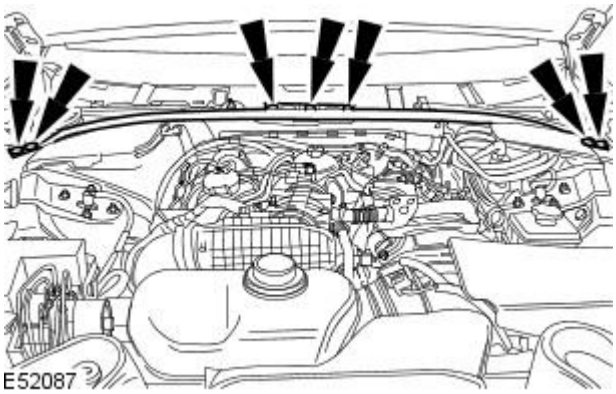


**4.** Remove the engine compartment support.

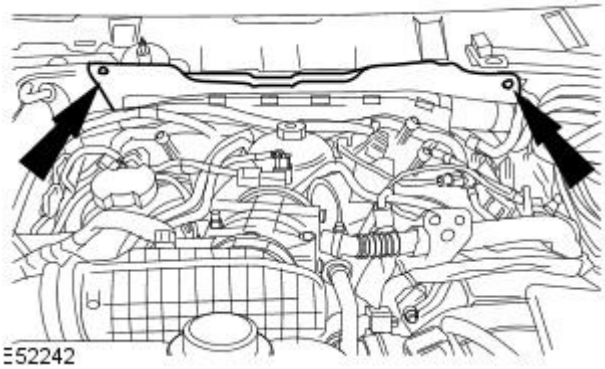


**5.** Remove the engine compartment access panel.

GETtheMANUALS.org

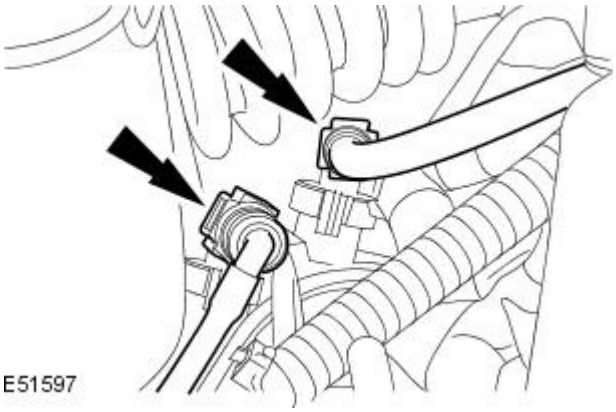


**6.** Disconnect the brake vacuum pump hoses.

**7.** Remove the catalytic converter.
For additional information, refer to: Catalytic Converter - 2.7L V6 - TdV6 (309-00 Exhaust System, Removal and Installation).

**8.** Remove the EGR coolant pipe bracket retaining bolt.

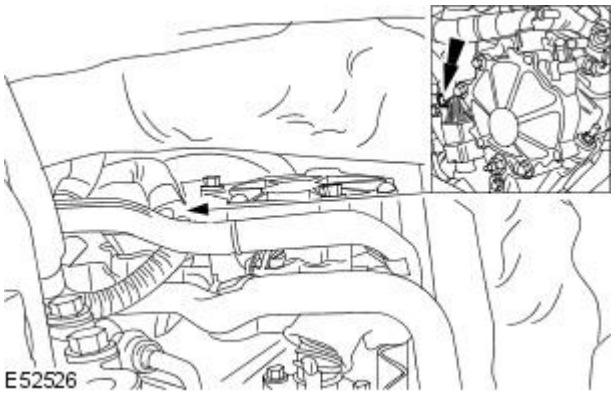


**9.** Remove the EGR coolant pipe bracket retaining bolt.

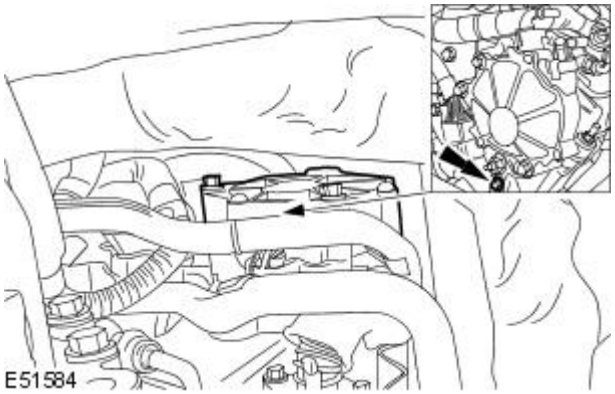


**10.** Remove the crankcase breather pipe bracket retaining nut.

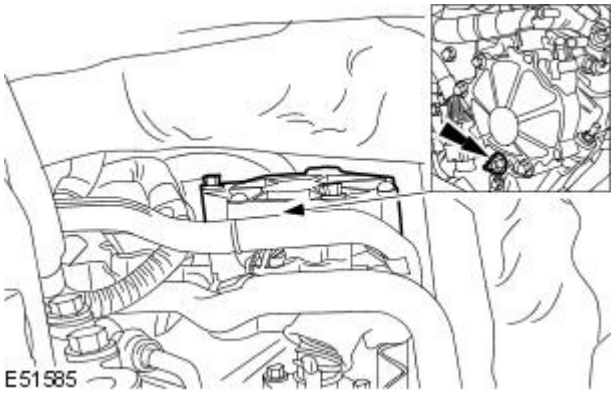


GETtheMANUALS.org

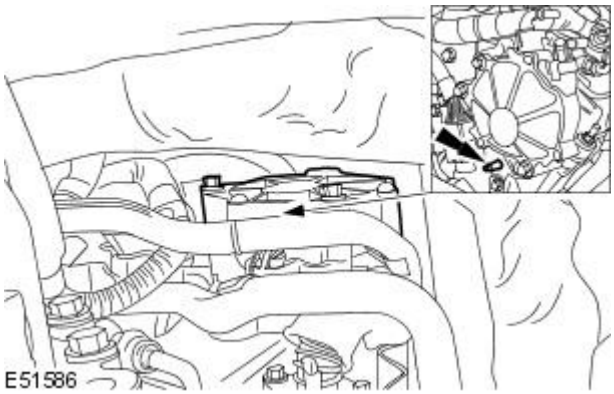


**11.** Remove the brake vacuum pump retaining stud.

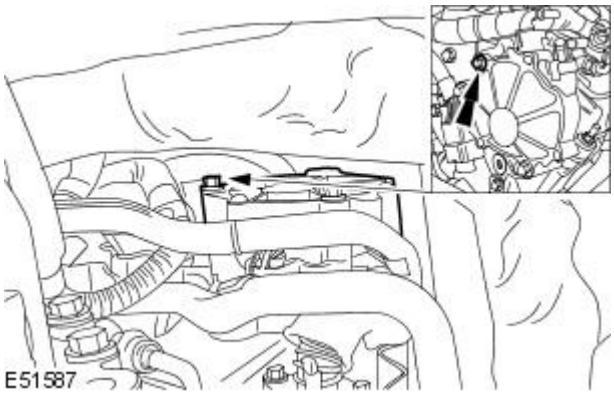


**12.** Remove the high pressure fuel pipe bracket retaining bolt.

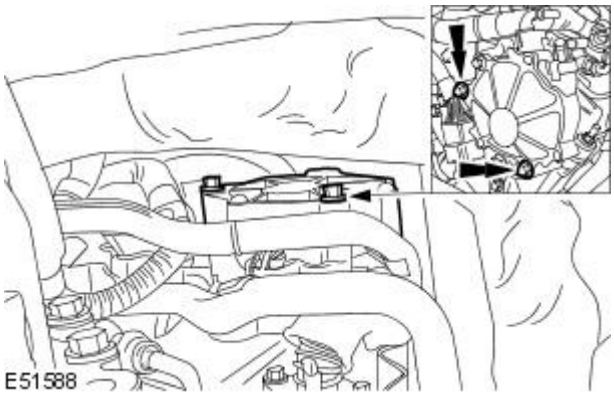


**13.** Remove the brake vacuum pump.

## Installation

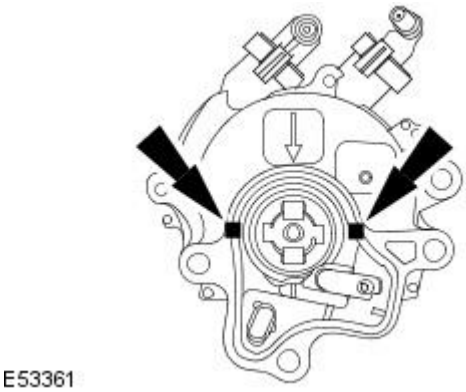


**1.** To install, reverse the removal procedure.

- Apply silicone gasket sealant or equivalent meeting Jaguar specification.
- The application of sealant must be 10mm square in two places. Install the brake vacuum pump immediately after applying the sealant.
- The brake vacuum pump should be fitted directly to the engine without smearing the sealant or the seal.

GETtheMANUALS.org

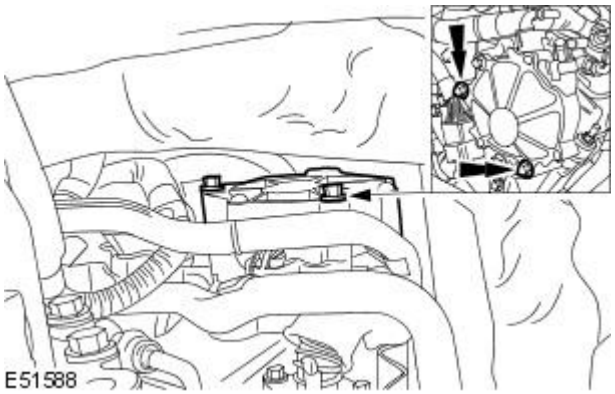


**2.** CAUTION: Make sure the drive coupling is aligned with the camshaft coupling.

Tighten to 23 Nm.

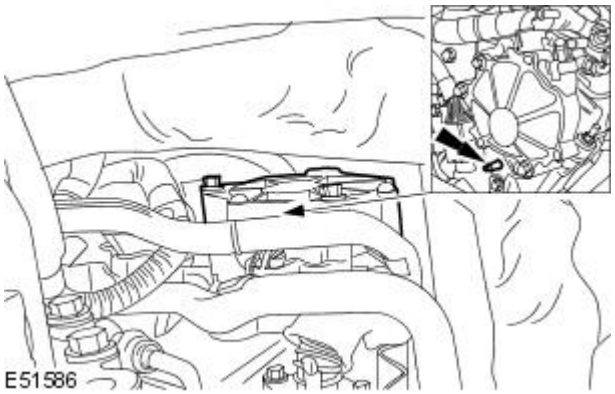


**3.** Tighten to 13 Nm.

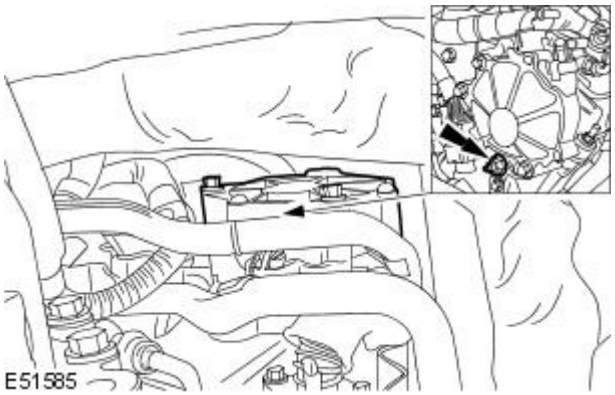


**4.** Tighten to 13 Nm.

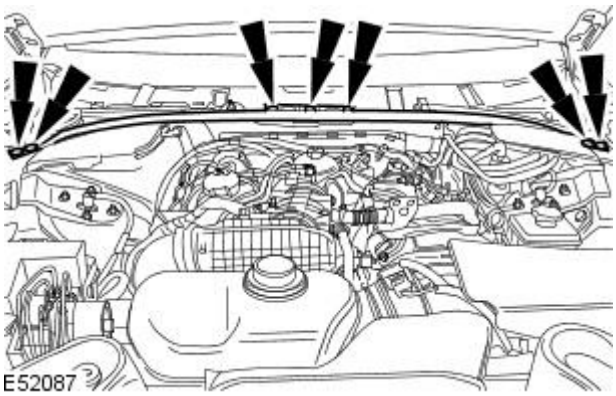


**5.** Tighten to 25 Nm.

GETtheMANUALS.org

# Anti-Lock Control - Stability Assist -

**Lubricants, Fluids, Sealers and Adhesives**

CAUTION: Do not use brake fluid ITT Super Dot 4 on 2006my vehicles onwards. Failure to follow this instruction may result in damage to the vehicle.

• NOTE: Brake fluid ITT Super Dot 4 has now been superseded by Shell ESL Super Dot 4 which is the Jaguar recommended brake fluid. Shell ESL Super Dot 4 can be used on all model years.

| Item | Specification |
|---|---|
| Brake fluid | ITT Super Dot 4 |
| Brake fluid | Shell ESL Super Dot 4 |

**Torque Specifications**

| Description | Nm | lb-ft | lb-in |
|---|---|---|---|
| Brake master cylinder primary pressure transducer | 30 | 22 | – |
| Brake tubes to hydraulic control unit (HCU) | 17 | 13 | – |
| Rear wheel speed sensor retaining bolt | 9 | – | 80 |
| Yaw rate sensor and accelerometer retaining nuts | 7 | – | 62 |
| Hydraulic control unit (HCU) retaining bolts | 9 | – | 80 |
| Steering wheel rotation sensor retaining screws | 4 | – | 35 |
| Steering column to lower shroud retaining screws | 3 | – | 27 |

GETtheMANUALS.org

# Anti-Lock Control - Stability Assist - Anti-Lock Control - Stability AssistVIN Range: M45255->N52047

Description and Operation

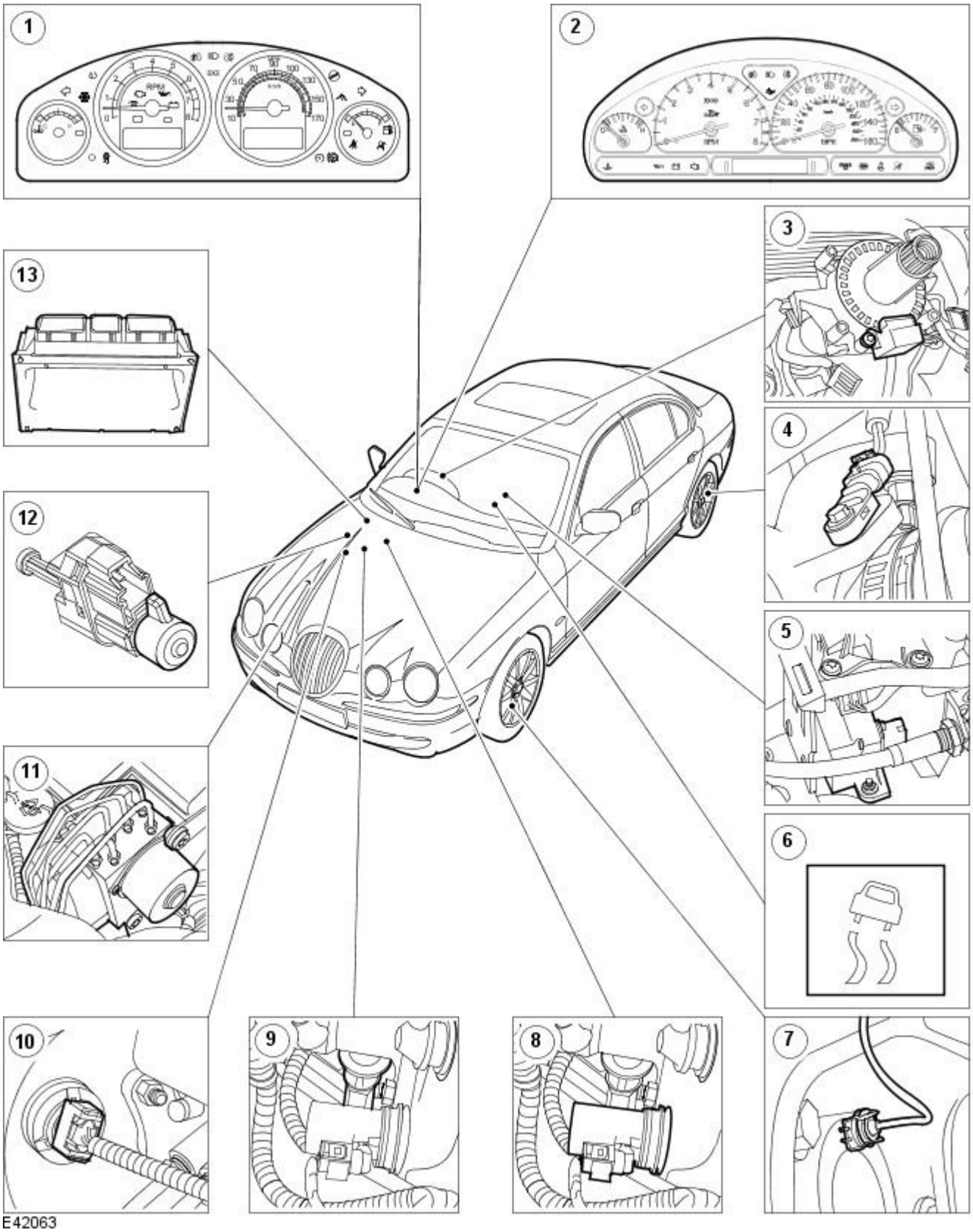


E42063

| Item | Part Number | Description |
|---|---|---|
| 1 | — | Instrument cluster - vehicles built 02/2004 onwards |
| 2 | — | Instrument cluster - vehicles built up to 01/2004 |
| 3 | — | Steering wheel rotation sensor |
| 4 | — | Wheel speed sensor - rear |
| 5 | — | Yaw/lateral rate sensor |
| 6 | — | Dynamic stability control / Traction control "ON/OFF" switch |
| 7 | — | Wheel speed sensor - front |
| 8 | — | Brake pedal travel sensor |
| 9 | — | Brake master cylinder primary pressure transducer |
| 10 | — | Master cylinder active booster solenoid |
| 11 | — | Dynamic stability control module |
| 12 | — | Brake pedal switch |
| 13 | — | Engine control module (ECM) |

GETthemANUALS.org

The anti-lock control - stability assist system includes the:

- anti-lock brake system (ABS)
- dynamic stability control (DSC)
- emergency brake assist (EBA)
- traction control system (TCS)
- engine drag control - vehicles with Diesel engines

Anti-lock Brake System (ABS)

The anti-lock brake system (ABS) modulates brake pressure on each wheel independently to maintain vehicle stability during braking. The ABS continually monitors the rotational velocity of each wheel anytime the ignition switch is in the run position and determines if a tire is skidding when the brakes are applied. Only then does the ABS intervene to modulate the brake pressure to the skidding wheel. The modulation continues until the wheel rotates freely. The brake pressure is then restored and the modulate/restore cycle is repeated whenever skidding is detected. This cycle occurs at a rate of several times per second.

The ABS module is capable of detecting the following system conditions:

- hydraulic valve failure
- wheel speed sensor failure
- ABS power relay short circuit
- interconnect failures to the ABS sensors, power and ground to the ABS module
- over/under voltage conditions

The ABS provides self-diagnostics and displays failure messages via the ABS indicator in the instrument cluster. Failure of the ABS module, for whatever reason, will not compromise the normal operation of the brake system.

Traction Control

Traction control is an additional function added to the anti-lock control - stability control system. The vehicles driven wheels are continually monitored for individual wheel speed relative to the calculated vehicle reference speed. If wheel slip is detected the traction control system intervenes. This intervention will either be brake control and/or engine torque control, dependent on the situation detected. This control remains active until traction is re-established.

Stability Assist

Dynamic stability control (DSC) maximizes vehicle stability under all conditions. The DSC system compares actual vehicle course to that intended by the driver. If the intended course differs from the actual course due to either over steer and/or under steer conditions, the DSC system will brake individual wheels and/or reduce engine torque to bring the vehicle back to the driver's intended direction. By using a combined yaw rate sensor and lateral accelerometer, the vehicles rotational motion around its vertical axis and centrifugal forces generated while cornering are calculated to determine the vehicle's actual behavior. Using additional sensors for detecting steering wheel position and road wheel speed enables the system to recognize the driver's intentions.

Dynamic stability control is enabled/disabled via the DSC **ON/OFF** switch. When the switch is in the **OFF** position, the amber DSC warning lamp solidly illuminates within the instrument cluster message center. The DSC is automatically activated when the ignition is switched on. The DSC also provides failure messages via the instrument cluster message center.

Emergency Brake Assist

The emergency brake assist function allows the driver to enter ABS with greater speed and efficiency so that maximum braking is achieved sooner. This function is activated by the rate of application which is measured by the pedal travel sensor. Above a certain threshold of application the EBA assists the driver into ABS, thus reducing the stopping distance.

Engine Drag Control - Vehicles with Diesel engine

The ABS/DSC module functionality includes engine braking control on cars fitted with the diesel engine. On certain road surfaces, downshifting or throttle lift-off can cause excessive engine braking at the driven wheels. Engine braking control responds to these conditions by increasing the engine torque in order to reduce undesirable engine braking forces and to help maintain maximum vehicle stability.

Engine braking contol functions in conjunction with ABS and therefore it cannot be turned off by the DSC control switch. The engine braking control system provides self-diagnostics and displays failure messages via the ABS indicator in the instrument cluster. Failure of the engine braking control system, for whatever reason, will not compromise the normal operation of the brake system.

GETtheMANUALS.org

# Anti-Lock Control - Stability Assist - Anti-Lock Control - Stability AssistVIN Range: N52048->N99999

Description and Operation

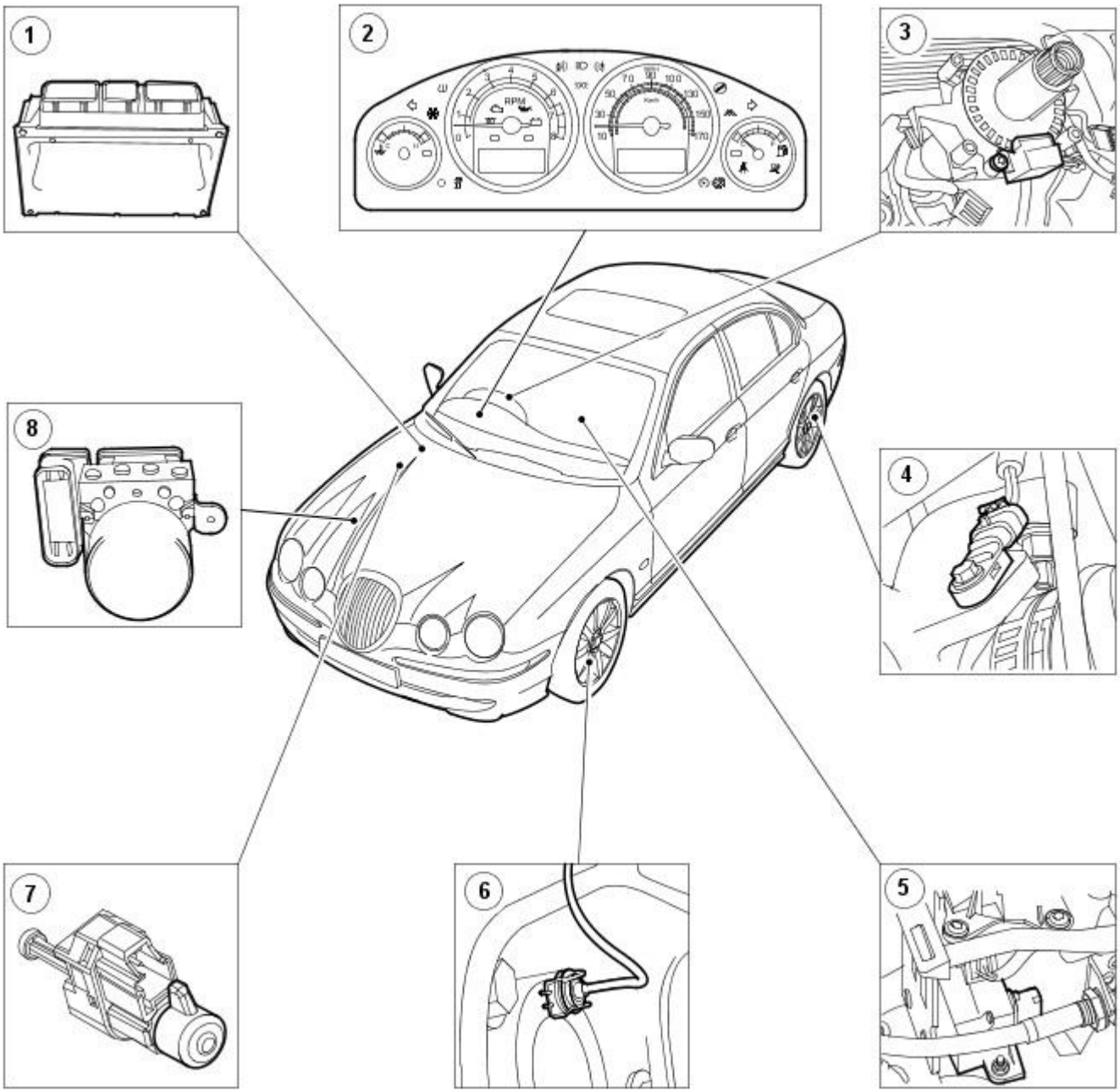


| Item | Part Number | Description |
|---|---|---|
| 1 | — | Engine control module (ECM) |
| 2 | — | Instrument cluster and message centre |
| 3 | — | Steering wheel rotation sensor |
| 4 | — | Wheel speed sensor - rear |
| 5 | — | Lateral/yaw rate sensor |
| 6 | — | Wheel speed sensor - front |
| 7 | — | Brake pedal switch |
| 8 | — | Anti-lock brake system (ABS)/Dynamic stability control hydraulic control modulator (HCU) |

The ABS modulates brake pressure on each wheel independently to maintain vehicle stability during braking. The ABS continually monitors the rotational velocity of each wheel during driving and determines if a tire is skidding when the brakes are applied. Only then does the ABS intervene to modulate the brake pressure to the skidding wheel. The modulation continues until the wheel rotates freely. The brake pressure is then restored and the modulate/restore cycle is repeated whenever skidding is detected. This cycle occurs at a rate of several times per second.

The ABS/dynamic stability control module is capable of detecting the following system conditions:

- hydraulic valve failure
- wheel speed sensor failure
- ABS power relay short circuit
- interconnect failures to the ABS sensors, power and ground to the ABS module
- over/under voltage conditions.

The ABS provides self-diagnostics and displays failure messages through the ABS warning indicator in the instrument cluster. Failure of the ABS module, for whatever reason, will not compromise the normal operation of the brake system.

The dynamic stability control system includes the:

GETtheMANUALS.org

- anti-lock brake system
- lateral/yaw control
- full speed traction control.

The dynamic stability control system manages the braking system to enhance the driver control of the vehicle.

The dynamic stability control system continually monitors the steering wheel angle, master cylinder brake pressure, front and rear wheel speeds and vehicle lateral/yaw rate acceleration.

The dynamic stability control module supports speed control and stability assist functions.

The lateral/yaw rate sensor supplies a signal to the dynamic stability control module, via a serial link, which monitors the vehicles rate of acceleration from its central axis in a sideways direction, and also the vehicles angular rotation around it's central axis.

The driver input parameters are continually monitored by the steering wheel rotation sensor and the HCU master cylinder pressure sensor.

Dynamic stability control is enabled/disabled through the traction control ON/OFF switch.

Self-diagnosis of the dynamic stability control system is provided through the instrument cluster and message center.

Traction control is an additional function added to the ABS/dynamic stability control system. The vehicles driven wheels are continually monitored for wheel spin relative to the calculated reference speed and to each other. If wheel spin is detected, the traction control function intervenes independently of the driver, applying brake pressure to the spinning wheel and reducing the engine drive torque supply. Meanwhile, brake pressure is modulated by the traction control until traction is re-established. Traction control brake actuation is diminished above 40 kph (25 mile/h). Above this speed, traction control relies primarily on engine torque reduction.

Traction control is enabled/disabled through the traction control ON/OFF switch. When the switch is in the OFF position, the amber traction control warning lamp solidly illuminates within the instrument cluster message center. The traction control is automatically activated when the ignition is switched on. Self-diagnosis of the traction control system is also provided through the instrument cluster and message center.

The traction control brake intervention is automatically disabled whenever the brakes exceed a temperature limit. The traction brake intervention will remain disabled until the brakes have cooled.

Hydraulic Control Modulator Brake Tube Location

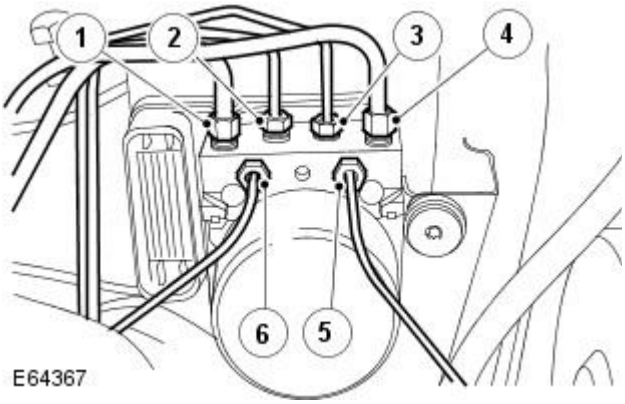


| Item | Part Number | Description |
|---|---|---|
| 1 | — | Secondary circuit |
| 2 | — | Front left-hand |
| 3 | — | Front right-hand |
| 4 | — | Primary circuit |
| 5 | — | Rear left-hand |
| 6 | — | Rear right-hand |

GETtheMANUALS.org

# Anti-Lock Control - Stability Assist - Anti-Lock Control - Stability AssistVIN Range: M45255->N52206

Diagnosis and Testing

## Principle of operation

The anti-lock control - stability assist system includes the:

- anti-lock brake system (ABS)
- yaw/acceleration control
- emergency brake assist
- traction control

Anti-lock Brake System (ABS)

The anti-lock brake system (ABS) modulates brake pressure on each wheel independently to maintain vehicle stability during braking. The ABS continually monitors the rotational velocity of each wheel anytime the ignition switch is in the run position and determines if a tire is skidding when the brakes are applied. Only then does the ABS intervene to modulate the brake pressure to the skidding wheel. The modulation continues until the wheel rotates freely. The brake pressure is then restored and the modulate/restore cycle is repeated whenever skidding is detected. This cycle occurs at a rate of several times per second.

The ABS module is capable of detecting the following system conditions:

- hydraulic valve failure
- wheel speed sensor failure
- ABS power relay short circuit
- interconnect failures to the ABS sensors, power and ground to the ABS module
- over/under voltage conditions

The ABS provides self-diagnostics and displays failure messages via the ABS indicator in the instrument cluster. Failure of the ABS module, for whatever reason, will not compromise the normal operation of the brake system.

Traction Control

Traction control is an additional function added to the anti-lock control - stability assist system. The vehicles driven wheels are continually monitored for wheel spin relative to the calculated reference speed and to each other. If wheel spin is detected, the traction control function intervenes, applying brake pressure to the slipping wheel and reducing the engine drive torque supply. Meanwhile, brake pressure is modulated by the traction control until traction is re-established. Traction control brake actuation is diminished above 40 km/h (25 mph). Above this speed traction control relies primarily on engine torque reduction.

The traction control brake intervention is automatically disabled whenever the brakes exceed a temperature limit. The traction control brake intervention will remain disabled until the brakes have cooled, irrespective of ignition switch position or ignition switch cycling.

Stability Assist

Dynamic stability control (DSC) maximizes vehicle stability under all conditions. The DSC system compares actual vehicle course to that intended by the driver. If the intended course differs from the actual course due to over steer or under steer conditions, the DSC system will brake individual wheels and reduce engine torque to bring the vehicle back to the driver's intended direction. By using a combined yaw rate sensor and lateral accelerometer, the vehicles rotational motion around its vertical axis and centrifugal forces generated while cornering are calculated to determine the vehicle's actual behavior. Using additional sensors for detecting steering wheel position and road wheel speed enables the system to recognize the driver's intentions.

Dynamic stability control is enabled/disabled via the DSC **ON/OFF** switch. When the switch is in the **OFF** position, the amber DSC warning lamp solidly illuminates within the instrument cluster message center. The DSC is automatically activated when the ignition is switched on. The DSC also provides failure messages via the instrument cluster message center.

Emergency Brake Assist

The emergency brake assist function allows the driver to enter ABS with greater speed and efficiency so that maximum braking is achieved sooner. Using the information received from the wheel speed sensors, brake pedal travel switch, master cylinder pressure transducer, master cylinder active booster solenoid and the yaw rate sensor and accelerometer, the ABS module detects whether more braking pressure can be applied in relation to how much braking pressure the driver is applying in an emergency braking situation.

## Inspection and Verification

1. **1.** Verify the customer concern.
2. **2.** Confirm if the ABS warning light was illuminated, or still is.

• NOTE: An intermittent fault may allow the warning light to go off. This does not necessarily mean the fault is not present. Some warnings will appear to clear when the ignition is cycled. This is often because the warning has flagged as a result of one of the vehicle's on-board diagnostic routines having run to detect the fault. If the same routine is not run when the ignition is switched **ON**, the warning will not reflag until the routine does run.

3. **3.** Visually inspect for obvious signs of mechanical or electrical damage.

| Mechanical | Electrical |
|---|---|
| • Brake fluid level<br>• Vacuum system<br>• Wheel speed sensor fitment<br>• Wheel speed sensor air gap<br>• Wheel speed sensor tone ring(s) (missing or damaged teeth/contamination)<br>• yaw rate/lateral accelerometer sensor cluster fitment<br>• Incorrect wheel or tire size | • Warning light operation<br>• Fuses (see table)<br>• Wheel speed sensors<br>• Connectors/Pins<br>• Harnesses<br>• Steering wheel angle sensor<br>• Yaw/lateral rate sensor cluster<br>• ABS/DSC module |

4. **4.** If an obvious cause for an observed or reported concern is found, correct the cause (if possible) before proceeding to the next step.

GETtheMANUALS.org

5. **5.** If the cause is not visually evident and the Jaguar approved diagnostic system is not available, use a fault code reader to retrieve

the fault codes before proceeding to the diagnostic trouble code (DTC) index chart.

## Fuse Identification Table

| Location | Fuse Number | Rating | Circuit |
|---|---|---|---|
| Front power distribution fuse box | 28 | 30 Amp | ABS/Stability assist control pump battery supply |
| Front power distribution fuse box | 31 | 30 Amp | ABS/Stability assist control module battery supply |
| Primary junction fuse box | 3 | 5 Amp | ABS/Stability assist control module ignition supply |
| Primary junction fuse box | 35 | 5 Amp | Brake light switch battery supply |

## Brake Pedal Position Switch Calibration

The brake pedal position switch procedure is under review. For further information, contact dealer technical support.

## Diagnostic Trouble Code (DTC) Index

| DTC | Description | Possible Source | Action |
|---|---|---|---|
| C1093 | Traction control disable CAN failure | • Traction control disable CAN message failure | For CAN module circuit tests, REFER to Section 418-00 Module Communications Network. |
| C1095 | Pump motor circuit failure | • Pump motor B+ power supply circuit; high resistance, open circuit, short circuit to GROUND, short circuit to B+<br>• Pump motor failure | For ABS/DSC module circuit tests,GO to Pinpoint Test A. . |
| C1141 | Left-hand front wheel speed sensor tone ring damaged/missing tooth | • Damaged/ missing tooth on tone ring | Refer to visual inspection chart. Inspect tone ring for damage. |
| C1142 | Right-hand front wheel speed sensor tone ring damaged/missing tooth | • Damaged/ missing tooth on tone ring | Refer to visual inspection chart. Inspect tone ring for damage. |
| C1143 | Left-hand rear wheel speed sensor tone ring damaged/missing tooth | • Damaged/ missing tooth on tone ring | Refer to visual inspection chart. Inspect tone ring for damage. |
| C1144 | Right-hand rear wheel speed sensor tone ring damaged/missing tooth | • Damaged/ missing tooth on tone ring | Refer to visual inspection chart. Inspect tone ring for damage. |
| C1145 | Right-hand front wheel speed sensor (WSS) circuit failure | • Wheel speed sensor circuit; open circuit, short circuit<br>• Wheel speed sensor to control module circuit; high resistance, open circuit, short circuit to GROUND<br>• Wheel speed sensor failure | For right hand front WSS circuit tests,GO to Pinpoint Test B. . |
| C1155 | Left-hand front wheel speed sensor (WSS) circuit failure | • Wheel speed sensor circuit; open circuit, short circuit<br>• Wheel speed sensor to control module circuit; high resistance, open circuit, short circuit to GROUND<br>• Wheel speed sensor failure | For left hand front WSS circuit tests,GO to Pinpoint Test C. . |
| C1165 | Right-hand rear wheel speed sensor (WSS) circuit failure | • Wheel speed sensor circuit; open circuit, short circuit<br>• Wheel speed sensor to control module circuit; high resistance, open circuit, short circuit to GROUND<br>• Wheel speed sensor failure | For right hand rear WSS circuit tests,GO to Pinpoint Test D. . |
| C1175 | Left-hand rear wheel speed sensor (WSS) circuit failure | • Wheel speed sensor circuit; open circuit, short circuit<br>• Wheel speed sensor to control module circuit; high resistance, open circuit, short circuit to GROUND<br>• Wheel speed sensor failure | For left -hand rear WSS circuit tests,GO to Pinpoint Test E. . |
| C1233 | Left-hand front wheel speed sensor (WSS) signal failure | • Wheel speed sensor gap too large<br>• Missing tone ring or sensor<br>• Incorrect tone ring<br>• Incorrect wheel size | Check the wheel speed sensor for correct fitment. REFER to Front Wheel Speed Sensor - in this section. |
| C1234 | Right-hand front wheel speed sensor (WSS) signal failure | • Wheel speed sensor gap too large<br>• Missing tone ring or sensor<br>• Incorrect tone ring<br>• Incorrect wheel size | Check the wheel speed sensor for correct fitment. REFER to Front Wheel Speed Sensor - in this section. |
| C1235 | Right-hand rear wheel speed sensor (WSS) signal failure | • Wheel speed sensor gap too large<br>• Missing tone ring or sensor<br>• Incorrect tone ring<br>• Incorrect wheel size | Check the wheel speed sensor for correct fitment. REFER to Rear Wheel Speed Sensor - in this section. |
| C1236 | Left-hand rear wheel speed sensor (WSS) signal failure | • Wheel speed sensor gap too large<br>• Missing tone ring or sensor<br>• Incorrect tone ring<br>• Incorrect wheel size | Check the wheel speed sensor for correct fitment. REFER to Rear Wheel Speed Sensor - in this section. |
| C1267 | ABS/DSC function temporarily disabled | • HF interference<br>• Supply voltages to valve solenoids or sensors out of range<br>• EEPROM read/write failure<br>• ABS/DSC module failure | Contact dealer technical support for advice on possible ABS/DSC module failure. Refer to inspection and verification for information on warning light behavior |

ETMSMANUALS.org

| DTC | Description | Possible Source | Action |
|---|---|---|---|
| C1277 | Steering angle sensor (SA sensor) circuit A/B failure | • SA sensor circuit(s) open circuit, short circuit, short circuit to GROUND or B+<br>• SA sensor damaged<br>• Sensor wiring damaged<br>• Sensor loose, not mounted correctly | For SA sensor circuit tests,GO to Pinpoint Test F. . |
| C1279 | Yaw rate sensor circuit failure | • Yaw rate/lateral accelerometer sensor cluster circuit(s) open/short circuit, short circuit to GROUND or B+<br>• Yaw rate/lateral accelerometer sensor cluster failure | For lateral/yaw rate sensor circuit tests,GO to Pinpoint Test G. . |
| C1280 | Yaw rate sensor signal failure | • Sensor loose, not mounted correctly<br>• Yaw rate/lateral accelerometer sensor cluster failure | Refer to visual inspection chart. Check sensor fitment. Refer to dealer technical support for advice on possible sensor failure. |
| C1281 | Lateral accelerometer sensor circuit failure | • Connector pins bent or corroded<br>• Sensor wiring damaged<br>• Yaw rate/lateral accelerometer sensor cluster failure | For lateral/yaw rate sensor circuit tests,GO to Pinpoint Test G. . |
| C1282 | Lateral accelerometer sensor signal failure | • Sensor loose, not mounted correctly<br>• Yaw rate/lateral accelerometer sensor cluster failure | Refer to visual inspection chart. Check sensor fitment. Refer to dealer technical support for advice on possible sensor failure. |
| C1285 | Booster solenoid circuit failure | • Booster solenoid circuit open circuit, short circuit to GROUND<br>• Booster solenoid failure | For booster solenoid circuit tests,GO to Pinpoint Test H. . |
| C1286 | Booster mechanical failure | • Brake light switch incorrectly calibrated<br>• Pedal force switch open circuit, short circuit to GROUND<br>• Pedal force switch failure<br>• Active brake booster mechanical failure<br>• ABS/DSC module failure | Contact dealer technical support for advice on brake pedal position switch calibration procedure. ¡ For pedal force switch tests,GO to Pinpoint Test J. .<br>Contact dealer technical support for advice on possible active brake booster or ABS/DSC module failure. |
| C1287 | Booster pedal force switch circuit failure | • Booster pedal force switch open circuit, short circuit to GROUND or B+<br>• Booster pedal force switch failure | For pedal force switch tests,GO to Pinpoint Test J. . |
| C1288 | Pressure sensor main/primary input circuit failure | • Brake pressure circuit open circuit, short circuit to GROUND or B+<br>• Connector pins bent or corroded<br>• Damaged harness/wiring<br>• Sensor failure<br>• ABS/DSC module failure | For pressure sensor circuit tests,GO to Pinpoint Test I. . |
| C1295 | Steering angle sensor internal failure | • Steering angle signal open circuit, short circuit to GROUND or B+, high resistance<br>• Sensor loose<br>• Encoder ring contaminated<br>• Sensor failure | For SA sensor circuit tests,GO to Pinpoint Test F. . Check sensor fitment, check encoder ring for debris. |
| C1306 | Steering angle sensor–no center found during initialization | • Steering angle sensor — no center found within time limits | Check for associated DTCs. Reinitialize the sensor by turning the ignition to the **OFF** position, then back **ON** without turning the steering wheel. |
| C1307 | Steering wheel angle sensor encoder ring failure | • Loose or damaged encoder ring<br>• Steering angle sensor failure<br>• Signal wires shorted together | Check the security and condition of the steering angle sensor encoder ring. Check encoder ring for debris. For SA sensor circuit tests,GO to Pinpoint Test F. . |
| C1440 | Brake pressure sensor signal fault | • Pressure sensor signal circuit open circuit, short circuit to GROUND or B+<br>• Brake pressure sensor failure | For pressure sensor circuit tests,GO to Pinpoint Test I. . |
| C1446 | Brake switch circuit failure | • Brake light switch signal failure<br>• Mechanical switch failure | For brake light switch circuit tests,GO to Pinpoint Test L. . |
| C1730 | Sensor supply voltage out of range (+5 volt) | • Sensor supply voltage circuit short circuit to GROUND or B+<br>• Defective sensor<br>• ABS/DSC module failure | For sensor power and GROUND circuit tests, REFER to Section 418-00 Module Communications Network.<br>Contact dealer technical support for advice on possible ABS/DSC module failure. |
| C1777 | Vacuum pressure circuit failure | • Mechanical failure in active booster unit<br>• ABS/DSC module failure | CLEAR the DTC. TEST the system for normal operation. If the DTC is repeated, contact dealer technical support for advice on possible active booster or ABS/DSC module failure. |
| C1994 | DSC continuous operation fault | • Yaw rate sensor cluster failure | Contact dealer technical support for advice on possible yaw rate sensor cluster failure. |
| C1997 | Pressure controller failure | • Booster solenoid open/short circuit, short circuit to GROUND or B+, high resistance<br>• Booster solenoid failure<br>• Pressure sensor signal open/short circuit, short circuit to GROUND or B+, high resistance<br>• Pressure sensor failure | For booster solenoid circuit tests,GO to Pinpoint Test H. .<br>For pressure sensor circuit tests,GO to Pinpoint Test I. . |
| C2778 | Yaw rate/Lateral accelerometer sensor cluster power supply failure | • Sensor power supply voltage open circuit, short circuit to GROUND or B+<br>• ABS/DSC module failure | For lateral/yaw rate sensor circuit tests,GO to Pinpoint Test G. .<br>Contact dealer technical support for advice on possible ABS/DSC module failure. |

GETtheMANUALS.org

| DTC | Description | Possible Source | Action |
|---|---|---|---|
| C2783 | Sensor cluster incorrect | • Incorrect yaw rate/lateral accelerometer sensor cluster fitted | Contact dealer technical support for advice on possible yaw rate sensor cluster failure. |
| C2785 | Yaw rate/Lateral accelerometer sensor(s) out of calibration | • Yaw rate/Lateral accelerometer sensor cluster not calibrated | Contact dealer technical support for advice on recalibration of the yaw rate sensor cluster. |
| B1231 | Longitudinal acceleration threshold exceeded | • Check brake hydraulic/mechanical function/condition<br>• Pressure sensor failure<br>• ACC failure<br>• Hydraulic unit failure<br>• Mechanical failure in booster actuation unit<br>• Brake booster vacuum low<br>• Brake booster failure | Carry out a full vehicle DTC check. Check for DTC P1696 as an indication of an ACC system fault. For pressure sensor circuit tests,GO to Pinpoint Test I. .<br>For vacuum circuit tests refer to inspection and verification.<br>Contact dealer technical support for further advice. |
| B1317 | Supply voltage out of range (HIGH) | • Charging system failure<br>• ABS/DSC module GROUND fault | Check the battery condition and charging system, REFER to Section 414-00 Battery and Charging System - General Information / 414-01 Battery, Mounting and Cables. |
| B1318 | Supply voltage out of range (LOW) | • Battery failure, loose connections<br>• Charging system failure<br>• ABS/DSC module positive supply fault | Check the battery condition and charging system, REFER to Section 414-00 Battery and Charging System - General Information / 414-01 Battery, Mounting and Cables. |
| B1342 | ABC/DSC module failure | • ABS/DSC module failure | Contact dealer technical support for advice on possible ABS/DSC module failure |
| B2141 | NVM configuration failure | • No or invalid vehicle configuration information received from the ECM and stored in EEPROM | Reconfigure the ECM<br>REFER to Section 418-00 Module Communications Network. |
| B2736 | Pedal travel sensor circuit failure | • Pedal travel sensor circuit: open circuit, short circuit to GROUND or B+, high resistance, signal wires short circuit to each other | For pedal travel sensor tests,GO to Pinpoint Test K. . |
| B2739 | Pedal travel sensor signal circuit failure | • Connector pins bent or corroded<br>• Pedal travel sensor signal failure; open circuit, short circuit to GROUND or B+, high resistance<br>• Pedal travel sensor failure<br>• ABS/DSC module failure | For pedal travel sensor tests,GO to Pinpoint Test K. . |
| B2741 | Yaw rate/Lateral accelerometer sensor cluster fault | • Yaw rate/Lateral accelerometer sensor cluster failure | Contact dealer technical support for advice on possible yaw rate sensor failure. |
| U1901 | Local CAN yaw rate/lateral accelerometer sensor cluster communication fault | • Local CAN fault<br>• Control module internal local CAN failure<br>• Yaw rate/Lateral accelerometer sensor cluster failure | For CAN module circuit tests,<br>REFER to Section 418-00 Module Communications Network.<br>Contact dealer technical support for advice on possible yaw rate sensor failure. |
| U2012 | Communication bus error | • CAN failure<br>• Control module internal CAN failure | For CAN circuit tests,<br>REFER to Section 418-00 Module Communications Network. |
| U2202 | Invalid configuration data received | • ABS/DSC incorrectly configured to VID block | Contact dealer technical support for advice on reconfiguration of modules. |
| U2515 | Missing message for adaptive cruise control ACC | • CAN message is not received at specified rate or is missing | For CAN module circuit tests,<br>REFER to Section 418-00 Module Communications Network. |
| U2522 | CAN message timeout from TCM | • CAN message is not received at specified rate or is missing | For CAN module circuit tests,<br>REFER to Section 418-00 Module Communications Network. |
| U2523 | CAN message timeout from ECM | • CAN message is not received at specified rate or is missing | For CAN module circuit tests,<br>REFER to Section 418-00 Module Communications Network. |
| U2527 | Local CAN transmit error | • Local CAN failure | For CAN module circuit tests,<br>REFER to Section 418-00 Module Communications Network. |

## Pinpoint Tests

CAUTION: When probing connectors to take measurements in the course of the pinpoint tests, use the adaptor kit, part number 3548-1358-00.

• NOTE: When performing electrical voltage or resistance tests, always use a digital multimeter (DMM) accurate to 3 decimal places, and with an up-to-date calibration certificate. When testing resistance, always take the resistance of the DMM leads into account.

• NOTE: Check and rectify basic faults before beginning diagnostic routines involving pinpoint tests.

| PINPOINT TEST A : C1095; PUMP MOTOR FAULT | |
|---|---|
| • NOTE: Check connectors and pins for damage/corrosion (see visual inspection). | |
| **TEST CONDITIONS** | **DETAILS/RESULTS/ACTIONS** |
| **A1: CHECK THE BATTERY POWER SUPPLY (1) TO THE ABS/DSC MODULE** | |
| | 1 Turn the ignition switch to the **OFF** position. |
| | 2 Disconnect the ABS/DSC module electrical connector FH103. |
| | 3 Measure the voltage between FH103, pin 01 (R) and GROUND. |

GETtheMANUALS.org

| | |
|---|---|
| | Is the voltage less than 10 volts?<br>**Yes**<br>REPAIR the circuit. This circuit includes the front power distribution fuse box (fuse 28). For additional information, refer to the wiring diagrams. CLEAR the DTC. TEST the system for normal operation.<br>**No**<br>GO to A2. |
| **A2: CHECK THE BATTERY POWER SUPPLY (2) TO THE ABS/DSC MODULE** | |
| | 1 Measure the voltage between FH103, pin 32 (RW) and GROUND. |
| | Is the voltage less than 10 volts?<br>**Yes**<br>REPAIR the circuit. This circuit includes the front power distribution fuse box (fuse 31). For additional information, refer to the wiring diagrams. CLEAR the DTC. TEST the system for normal operation.<br>**No**<br>GO to A3. |
| **A3: CHECK THE GROUND TO THE ABS/DSC MODULE** | |
| | 1 Measure the resistance between FH103, pins 16 and 47 (B) and GROUND. |
| | Is the resistance greater than 5 ohms?<br>**Yes**<br>REPAIR the high resistance circuit. For additional information, refer to the wiring diagrams. CLEAR the DTC. TEST the system for normal operation.<br>**No**<br>Contact dealer technical support for advice on possible ABS/DSC module failure. |

## PINPOINT TEST B : C1145; RIGHT HAND FRONT WHEEL SPEED SENSOR (WSS) ELECTRICAL FAILURE

• NOTE: Check connectors and pins for damage/corrosion (see visual inspection).

| TEST CONDITIONS | DETAILS/RESULTS/ACTIONS |
|---|---|
| **B1: CHECK THE WSS TO ABS/DSC MODULE SIGNAL CIRCUIT FOR HIGH RESISTANCE** | |
| | 1 Turn the ignition switch to the **OFF** position. |
| | 2 Disconnect the ABS/DSC module electrical connector FH103. |
| | 3 Disconnect the WSS electrical connector FH116. |
| | 4 Measure the resistance between FH103, pin 34 (WR) and FH116, pin 01 (WR). |
| | Is the resistance greater than 5 ohms?<br>**Yes**<br>REPAIR the high resistance circuit. For additional information, refer to the wiring diagrams. CLEAR the DTC. TEST the system for normal operation.<br>**No**<br>GO to B2. |
| **B2: CHECK THE WSS TO ABS/DSC MODULE SIGNAL CIRCUIT FOR SHORT TO GROUND** | |
| | 1 Measure the resistance between FH103, pin 34 (WR) and GROUND. |
| | Is the resistance less than 10,000 ohms?<br>**Yes**<br>REPAIR the short circuit. For additional information, refer to the wiring diagrams. CLEAR the DTC. TEST the system for normal operation.<br>**No**<br>GO to B3. |
| **B3: CHECK THE WSS TO ABS/DSC MODULE SUPPLY CIRCUIT FOR HIGH RESISTANCE** | |
| | 1 Measure the resistance between FH103, pin 33 (YG) and FH116, pin 02 (YG). |
| | Is the resistance greater than 5 ohms?<br>**Yes**<br>REPAIR the high resistance circuit. For additional information, refer to the wiring diagrams. CLEAR the DTC. TEST the system for normal operation.<br>**No**<br>GO to B4. |
| **B4: CHECK THE WSS TO ABS/DSC MODULE SUPPLY CIRCUIT FOR SHORT TO GROUND** | |
| | 1 Measure the resistance between FH103, pin 33 (YG) and GROUND. |
| | Is the resistance less than 10,000 ohms?<br>**Yes**<br>REPAIR the short circuit. For additional information, refer to the wiring diagrams. CLEAR the DTC. TEST the system for normal operation.<br>**No**<br>INSTALL a new right-hand front wheel speed sensor.<br>REFER to Front Wheel Speed Sensor - in this section.<br>CLEAR the DTC. TEST the system for normal operation. If the DTC is repeated, contact dealer technical support for advice on possible ABS/DSC module failure. |

## PINPOINT TEST C : C1155; LEFT HAND FRONT WHEEL SPEED SENSOR (WSS) ELECTRICAL FAILURE

• NOTE: Check connectors and pins for damage/corrosion (see visual inspection).

| TEST CONDITIONS | DETAILS/RESULTS/ACTIONS |
|---|---|
| **C1: CHECK THE WSS TO ABS/DSC MODULE SIGNAL CIRCUIT FOR HIGH RESISTANCE** | |
| | 1 Turn the ignition switch to the **OFF** position. |
| | 2 Disconnect the ABS/DSC module electrical connector FH103. |
| | 3 Disconnect the WSS electrical connector FH115. |
| | 4 Measure the resistance between FH103, pin 45 (W) and FH115, pin 1 (W). |
| | Is the resistance greater than 5 ohms?<br>**Yes**<br>REPAIR the high resistance circuit. For additional information, refer to the wiring diagrams. CLEAR the DTC. TEST the system for normal operation.<br>**No**<br>GO to C2. |
| **C2: CHECK THE WSS TO ABS/DSC MODULE SIGNAL CIRCUIT FOR SHORT TO GROUND** | |
| | 1 Measure the resistance between FH103, pin 46 (Y) and GROUND. |

GETtheMANUALS.org

| | |
|---|---|
| | Is the resistance less than 10,000 ohms?<br>**Yes**<br>REPAIR the short circuit. For additional information, refer to the wiring diagrams. CLEAR the DTC. TEST the system for normal operation.<br>**No**<br>GO to C3. |
| **C3: CHECK THE WSS TO ABS/DSC MODULE SUPPLY CIRCUIT FOR HIGH RESISTANCE** | |
| | 1 Measure the resistance between FH103, pin 46 (Y) and FH115, pin 02 (Y). |
| | Is the resistance greater than 5 ohms?<br>**Yes**<br>REPAIR the high resistance circuit. For additional information, refer to the wiring diagrams. CLEAR the DTC. TEST the system for normal operation.<br>**No**<br>GO to C4. |
| **C4: CHECK THE WSS TO ABS/DSC MODULE SUPPLY CIRCUIT FOR SHORT TO GROUND** | |
| | 1 Measure the resistance between FH103, pin 46 (Y) and GROUND. |
| | Is the resistance less than 10,000 ohms?<br>**Yes**<br>REPAIR the short circuit. For additional information, refer to the wiring diagrams. CLEAR the DTC. TEST the system for normal operation.<br>**No**<br>INSTALL a new left-hand front wheel speed sensor.<br>REFER to Front Wheel Speed Sensor - in this section.<br>CLEAR the DTC. TEST the system for normal operation. If the DTC is repeated, contact dealer technical support for advice on possible ABS/DSC module failure. |

## PINPOINT TEST D : C1165; RIGHT HAND REAR WHEEL SPEED SENSOR (WSS) ELECTRICAL FAILURE

• NOTE: Check connectors and pins for damage/corrosion (see visual inspection).

| TEST CONDITIONS | DETAILS/RESULTS/ACTIONS |
|---|---|
| **D1: CHECK THE WSS TO ABS/DSC MODULE SIGNAL CIRCUIT FOR HIGH RESISTANCE** | |
| | 1 Turn the ignition switch to the **OFF** position. |
| | 2 Disconnect the ABS/DSC module electrical connector FH103. |
| | 3 Disconnect the WSS electrical connector RR01. |
| | 4 Measure the resistance between FH103, pin 43 (N) and RR01, pin 01 (N). |
| | Is the resistance greater than 5 ohms?<br>**Yes**<br>REPAIR the high resistance circuit. For additional information, refer to the wiring diagrams. CLEAR the DTC. TEST the system for normal operation.<br>**No**<br>GO to D2. |
| **D2: CHECK THE WSS TO ABS/DSC MODULE SIGNAL CIRCUIT FOR SHORT TO GROUND** | |
| | 1 Measure the resistance between FH103, pin 43 (N) and GROUND. |
| | Is the resistance less than 10,000 ohms?<br>**Yes**<br>REPAIR the short circuit. For additional information, refer to the wiring diagrams. CLEAR the DTC. TEST the system for normal operation.<br>**No**<br>GO to D3. |
| **D3: CHECK THE WSS TO ABS/DSC MODULE SUPPLY CIRCUIT FOR HIGH RESISTANCE** | |
| | 1 Measure the resistance between FH103, pin 42 (B) and RR01, pin 01 (B). |
| | Is the resistance greater than 5 ohms?<br>**Yes**<br>REPAIR the high resistance circuit. For additional information, refer to the wiring diagrams. CLEAR the DTC. TEST the system for normal operation.<br>**No**<br>GO to D4. |
| **D4: CHECK THE WSS TO ABS/DSC MODULE SUPPLY CIRCUIT FOR SHORT TO GROUND** | |
| | 1 Measure the resistance between FH103, pin 42 (B) and GROUND. |
| | Is the resistance less than 10,000 ohms?<br>**Yes**<br>REPAIR the short circuit. For additional information, refer to the wiring diagrams. CLEAR the DTC. TEST the system for normal operation.<br>**No**<br>INSTALL a new right-hand rear wheel speed sensor.<br>REFER to Rear Wheel Speed Sensor - in this section.<br>REFER to Rear Wheel Speed Sensor - in this section. CLEAR the DTC. TEST the system for normal operation. If the DTC is repeated, contact dealer technical support for advice on possible ABS/DSC module failure. |

## PINPOINT TEST E : C1175; LEFT HAND REAR WHEEL SPEED SENSOR (WSS) ELECTRICAL FAILURE

• NOTE: Check connectors and pins for damage/corrosion (see visual inspection).

| TEST CONDITIONS | DETAILS/RESULTS/ACTIONS |
|---|---|
| **E1: CHECK THE WSS TO ABS/DSC MODULE SIGNAL CIRCUIT FOR HIGH RESISTANCE** | |
| | 1 Turn the ignition switch to the **OFF** position. |
| | 2 Disconnect the ABS/DSC module electrical connector FH103. |
| | 3 Disconnect the WSS electrical connector RL01. |
| | 4 Measure the resistance between FH103, pin 36 (N) and RL01, pin 02 (N). |
| | Is the resistance greater than 5 ohms?<br>**Yes**<br>REPAIR the high resistance circuit. For additional information, refer to the wiring diagrams. CLEAR the DTC. TEST the system for normal operation.<br>**No**<br>GO to E2. |
| **E2: CHECK THE WSS TO ABS/DSC MODULE SIGNAL CIRCUIT FOR SHORT TO GROUND** | |
| | 1 Measure the resistance between FH103, pin 36 (N) and GROUND. |

SELFREPAIRMANUALS.BIZ

| | |
|---|---|
| | Is the resistance less than 10,000 ohms?<br>**Yes**<br>REPAIR the short circuit. For additional information, refer to the wiring diagrams. CLEAR the DTC. TEST the system for normal operation.<br>**No**<br>GO to E3. |
| **E3: CHECK THE WSS TO ABS/DSC MODULE SUPPLY CIRCUIT FOR HIGH RESISTANCE** | |
| | 1 Measure the resistance between FH103, pin 37 (B) and RL01, pin 01 (B). |
| | Is the resistance greater than 5 ohms?<br>**Yes**<br>REPAIR the high resistance circuit. For additional information, refer to the wiring diagrams. CLEAR the DTC. TEST the system for normal operation.<br>**No**<br>GO to E4. |
| **E4: CHECK THE WSS TO ABS/DSC MODULE SUPPLY CIRCUIT FOR SHORT TO GROUND** | |
| | 1 Measure the resistance between FH103, pin 37 (B) and GROUND. |
| | Is the resistance less than 10,000 ohms?<br>**Yes**<br>REPAIR the short circuit. For additional information, refer to the wiring diagrams. CLEAR the DTC. TEST the system for normal operation.<br>**No**<br>INSTALL a new left-hand rear wheel speed sensor.<br>REFER to Rear Wheel Speed Sensor - in this section.<br>CLEAR the DTC. TEST the system for normal operation. If the DTC is repeated, contact dealer technical support for advice on possible ABS/DSC module failure. |

## PINPOINT TEST F : C1277, C1295; STEERING ANGLE SENSOR (SA SENSOR) 'A' AND 'B' CIRCUIT FAILURE

• NOTE: Check connectors and pins for damage/corrosion (see visual inspection).

| TEST CONDITIONS | DETAILS/RESULTS/ACTIONS |
|---|---|
| **F1: CHECK THE VOLTAGE SUPPLY TO THE STEERING ANGLE SENSOR** | |
| | 1 Disconnect the steering angle sensor electrical connector FC110. |
| | 2 Turn the ignition switch to the **ON** position. |
| | 3 Measure the voltage between FC110, pin 01 (R) and GROUND. |
| | Is the voltage less than 10 volts?<br>**Yes**<br>GO to F2.<br>**No**<br>GO to F3. |
| **F2: CHECK THE STEERING ANGLE SENSOR VOLTAGE SUPPLY CIRCUIT FOR HIGH RESISTANCE** | |
| | 1 Turn the ignition switch to the **OFF** position. |
| | 2 Disconnect the ABS/DSC module electrical connector FH103. |
| | 3 Measure the continuity between FH103, pin 07 (R) and FC110, pin 01 (R). |
| | Is the resistance greater than 5 ohms?<br>**Yes**<br>REPAIR the high resistance circuit. This circuit includes the splice FCS18. For additional information, refer to the wiring diagrams. CLEAR the DTC. TEST the system for normal operation.<br>**No**<br>Contact dealer technical support for advice on possible ABS/DSC module failure. |
| **F3: CHECK THE STEERING ANGLE SENSOR GROUND SUPPLY CIRCUIT** | |
| | 1 Turn the ignition switch to the **OFF** position. |
| | 2 Reconnect the ABS/DSC module electrical connector FH103. |
| | 3 Disconnect the yaw/lateral rate sensor electrical connector CA236. |
| | 4 Turn the ignition switch to the **ON** position. |
| | 5 Measure the resistance between FC110, pin 04 (B) and GROUND. |
| | Is the resistance greater than 5 ohms?<br>**Yes**<br>REPAIR the high resistance circuit. This circuit includes the splice FCS19. For additional information, refer to the wiring diagrams. CLEAR the DTC. TEST the system for normal operation.<br>**No**<br>GO to F4. |
| **F4: CHECK THE STEERING ANGLE SENSOR SIGNAL CIRCUIT 'A' FOR HIGH RESISTANCE** | |
| | 1 Turn the ignition switch to the **OFF** position. |
| | 2 Disconnect the ABS/DSC module electrical connector FH103. |
| | 3 Measure the resistance between FH103, pin 03 (G) and FC110 pin 03 (G). |
| | Is the resistance greater than 5 ohms?<br>**Yes**<br>GO to F5.<br>**No**<br>REPAIR the high resistance circuit. For additional information, refer to the wiring diagrams. CLEAR the DTC. TEST the system for normal operation. |
| **F5: CHECK THE STEERING ANGLE SENSOR SIGNAL CIRCUIT 'B' FOR HIGH RESISTANCE** | |
| | 1 Measure the resistance between FH103, pin 06 (Y) and FC110, pin 02 (Y). |
| | Is the resistance greater than 5 ohms?<br>**Yes**<br>GO to F6.<br>**No**<br>REPAIR the high resistance circuit. For additional information, refer to the wiring diagrams. CLEAR the DTC. TEST the system for normal operation. |
| **F6: CHECK THE STEERING ANGLE SENSOR SIGNAL CIRCUIT 'A' FOR SHORT TO GROUND** | |
| | 1 Measure the resistance between FC110, pin 03 (G) and GROUND. |
| | Is the resistance less than 10,000 ohms?<br>**Yes**<br>REPAIR the short circuit. For additional information, refer to the wiring diagrams. CLEAR the DTC. TEST the system for normal operation.<br>**No** |

GETtheMANUALS.org

| | |
|---|---|
| | GO to F7. |
| **F7: CHECK THE STEERING ANGLE SENSOR SIGNAL CIRCUIT 'B' FOR SHORT TO GROUND** | |
| | 1 Measure the resistance between FC110, pin 02 (Y) and GROUND. |
| | Is the resistance less than 10,000 ohms?<br>**Yes**<br>REPAIR the short circuit. For additional information, refer to the wiring diagrams. CLEAR the DTC. TEST the system for normal operation.<br>**No**<br>GO to F8. |
| **F8: CHECK THE STEERING ANGLE SENSOR SIGNAL CIRCUITS 'A' AND 'B' FOR SHORT TO EACH OTHER** | |
| | 1 Measure the resistance between FC110, pin 02 (Y) FC110, pin 03 (G). |
| | Is the resistance less than 5 ohms?<br>**Yes**<br>REPAIR the short circuit. For additional information, refer to the wiring diagrams. CLEAR the DTC. TEST the system for normal operation.<br>**No**<br>INSTALL a new steeering angle sensor.<br>REFER to Steering Wheel Rotation Sensor - in this section.<br>CLEAR the DTC. TEST the system for normal operation. If the DTC is repeated, contact dealer technical support for advice on possible ABS/DSC module failure. |

## PINPOINT TEST G : C1279, C1281, C2778, C2785, B2741; LATERAL/YAW RATE CIRCUIT FAILURE

- NOTE: For CAN circuit tests, REFER to section 418-00.
- NOTE: Check the yaw rate sensor cluster for correct installation (see visual inspection).
- NOTE: Check connectors and pins for damage/corrosion (see visual inspection).

| TEST CONDITIONS | DETAILS/RESULTS/ACTIONS |
|---|---|
| **G1: CHECK THE VOLTAGE SUPPLY TO THE LATERAL/YAW RATE SENSOR** | |
| | 1 Disconnect the yaw/lateral rate sensor electrical connector CA236. |
| | 2 Turn the ignition switch to the **ON** position. |
| | 3 Measure the voltage between CA236, pin 03 (R) and GROUND. |
| | Is the voltage less than 10 volts?<br>**Yes**<br>GO to G2.<br>**No**<br>GO to G4. |
| **G2: CHECK THE YAW/LATERAL RATE SENSOR VOLTAGE SUPPLY CIRCUIT FOR HIGH RESISTANCE** | |
| | 1 Turn the ignition switch to the **OFF** position. |
| | 2 Disconnect the ABS/DSC module electrical connector FH103. |
| | 3 Measure the resistance between CA236, pin 03 (R) and FH103, pin 07 (R). |
| | Is the resistance greater than 5 ohms?<br>**Yes**<br>REPAIR the high resistance circuit. This circuit includes the splice FCS18. For additional information, refer to the wiring diagrams. CLEAR the DTC. TEST the system for normal operation.<br>**No**<br>GO to G3. |
| **G3: CHECK THE YAW/LATERAL RATE SENSOR VOLTAGE SUPPLY CIRCUIT FOR SHORT TO GROUND** | |
| | 1 Measure the resistance between CA236, pin 03 (R) and GROUND. |
| | Is the resistance less than 10,000 ohms?<br>**Yes**<br>REPAIR the short circuit. This circuit includes the splice FCS18. For additional information, refer to the wiring diagrams. CLEAR the DTC. TEST the system for normal operation.<br>**No**<br>Contact dealer technical support for advice on possible ABS/DSC module failure. |
| **G4: CHECK THE GROUND TO THE YAW/LATERAL RATE SENSOR** | |
| | 1 Measure the resistance between CA236, pin 05 (BK) and GROUND. |
| | Is the resistance greater than 5 ohms?<br>**Yes**<br>GO to G5.<br>**No**<br>GO to G6. |
| **G5: CHECK THE YAW/LATERAL RATE SENSOR GROUND CIRCUIT FOR HIGH RESISTANCE** | |
| | 1 Turn the ignition switch to the **OFF** position. |
| | 2 Disconnect the ABS/DSC module electrical connector FH103. |
| | 3 Measure the resistance between CA236, pin 05 (BK) and FH103, pin 05 (B). |
| | Is the resistance greater than 5 ohms?<br>**Yes**<br>REPAIR the high resistance circuit. This circuit includes the splice FCS19. For additional information, refer to the wiring diagrams. CLEAR the DTC. TEST the system for normal operation.<br>**No**<br>GO to G6. |
| **G6: CHECK THE YAW/LATERAL RATE SENSOR GROUND CIRCUIT FOR SHORT TO B+** | |
| | 1 Measure the voltage between CA236, pin 05 (BK) and GROUND. |
| | Is the voltage greater than 3 volts?<br>**Yes**<br>REPAIR the short circuit. This circuit includes the splice FCS19. For additional information, refer to the wiring diagrams. CLEAR the DTC. TEST the system for normal operation.<br>**No**<br>Contact dealer technical support for advice on possible ABS/DSC module failure. |

## PINPOINT TEST H : C1285; ACTIVE BOOSTER SOLENOID CIRCUIT FAILURE

- NOTE: Check connectors and pins for damage/corrosion (see visual inspection).

| TEST CONDITIONS | DETAILS/RESULTS/ACTIONS |
|---|---|
| **H1: CHECK THE ACTIVE BOOSTER SOLENOID SUPPLY VOLTAGE** | |
| | 1 Disconnect the active booster solenoid electrical connector, FH56. |

GETtheMANUALS.org

| | |
|---|---|
| | 2 Turn the ignition switch to the **ON** position. |
| | 3 Measure the voltage between FH56, pin 04 (WR) and GROUND. |
| | Is the voltage less than 10 volts?<br>**Yes**<br>GO to H2.<br>**No**<br>GO to H4. |
| **H2: CHECK THE ACTIVE BOOSTER SOLENOID SUPPLY CIRCUIT FOR HIGH RESISTANCE** | |
| | 1 Turn the ignition switch to the **OFF** position. |
| | 2 Disconnect the ABS/DSC module electrical connector FH103. |
| | 3 Measure the resistance between FH56, pin 04 (WR) and FH103, pin 17 (WR). |
| | Is the resistance greater than 5 ohms?<br>**Yes**<br>REPAIR the high resistance circuit. For additional information, refer to the wiring diagrams. CLEAR the DTC. TEST the system for normal operation.<br>**No**<br>GO to H3. |
| **H3: CHECK THE ACTIVE BOOSTER SOLENOID SUPPLY CIRCUIT FOR SHORT TO GROUND** | |
| | 1 Measure the resistance between FH56 pin 04 (WR) and GROUND. |
| | Is the resistance less than 10,000 ohms?<br>**Yes**<br>REPAIR the short circuit. For additional information, refer to the wiring diagrams. CLEAR the DTC. TEST the system for normal operation.<br>**No**<br>Contact dealer technical support for advice on possible ABS/DSC module failure. |
| **H4: CHECK THE ACTIVE BOOSTER SOLENOID SIGNAL CIRCUIT FOR HIGH RESISTANCE** | |
| | 1 Disconnect the ABS/DSC module electrical connector FH103. |
| | 2 Measure the resistance between FH56, pin 03 (NR) and FH103, pin 31 (NR). |
| | Is the resistance greater than 5 ohms?<br>**Yes**<br>REPAIR the high resistance circuit. For additional information, refer to the wiring diagrams. CLEAR the DTC. TEST the system for normal operation.<br>**No**<br>GO to H5. |
| **H5: CHECK THE ACTIVE BOOSTER SOLENOID SIGNAL CIRCUIT FOR SHORT TO GROUND** | |
| | 1 Measure the resistance between FH56, pin 03 (NR) and GROUND. |
| | Is the resistance less than 10,000 ohms?<br>**Yes**<br>REPAIR the short circuit. For additional information, refer to the wiring diagrams. CLEAR the DTC. TEST the system for normal operation.<br>**No**<br>Contact dealer technical support for advice on possible active booster failure. CLEAR the DTC. TEST the system for normal operation. If the DTC is repeated, contact dealer technical support for advice on possible ABS/DSC module failure. |

## PINPOINT TEST I : C1286,C1287; PEDAL FORCE SWITCH CIRCUIT FAILURE

• NOTE: Check connectors and pins for damage/corrosion (see visual inspection).

| TEST CONDITIONS | DETAILS/RESULTS/ACTIONS |
|---|---|
| **I1: CHECK THE PEDAL FORCE SWITCH FUNCTION NORMALLY CLOSED** | |
| | 1 Disconnect the brake pedal force switch electrical connector FH56. |
| | 2 With the brake pedal in the rest position, measure the resistance between pins 02 and 05 of the switch. |
| | Is the resistance greater than 5 ohms?<br>**Yes**<br>Contact dealer technical support for advice on possible active booster failure. CLEAR the DTC. TEST the system for normal operation.<br>**No**<br>GO to I2. |
| **I2: CHECK THE PEDAL FORCE SWITCH FUNCTION NORMALLY OPEN** | |
| | 1 With the brake pedal depressed, measure the resistance between pins 01 and 05 of the switch. |
| | Is the resistance greater than 5 ohms?<br>**Yes**<br>Contact dealer technical support for advice on possible active booster failure. CLEAR the DTC. TEST the system for normal operation.<br>**No**<br>GO to I3. |
| **I3: CHECK THE PEDAL FORCE SWITCH SUPPLY VOLTAGE** | |
| | 1 Turn the ignition switch to the **ON** position. |
| | 2 Measure the voltage between FH56, pin 05 (NG) and GROUND. |
| | Is the voltage less than 10 volts?<br>**Yes**<br>GO to I4.<br>**No**<br>GO to I6. |
| **I4: CHECK THE PEDAL FORCE SWITCH SUPPLY CIRCUIT FOR HIGH RESISTANCE** | |
| | 1 Turn the ignition switch to the **OFF** position. |
| | 2 Disconnect the ABS/DSC module electrical connector FH103. |
| | 3 Measure the resistance between FH56, pin 05 (NG) and FH103, pin 28 (NG). |
| | Is the resistance greater than 5 ohms?<br>**Yes**<br>GO to I5.<br>**No**<br>REPAIR the high resistance circuit. For additional information, refer to the wiring diagrams. CLEAR the DTC. TEST the system for normal operation. |
| **I5: CHECK THE PEDAL FORCE SWITCH SUPPLY CIRCUIT FOR SHORT TO GROUND** | |
| | 1 Measure the resistance between FH56, pin 5 (NG) and GROUND. |

GETtheMANUALS.org

| | |
|---|---|
| | Is the resistance less than 10,000 ohms?<br>**Yes**<br>REPAIR the short circuit. For additional information, refer to the wiring diagrams. CLEAR the DTC. TEST the system for normal operation.<br>**No**<br>Contact dealer technical support for advice on possible ABS/DSC module failure. |
| **I6: CHECK THE BRAKE PEDAL FORCE SWITCH SIGNAL (NC) CIRCUIT FOR HIGH RESISTANCE** | |
| | 1 Measure the resistance between FH56, pin 02 (YR) and FH103, pin 30 (YR). |
| | Is the resistance greater than 5 ohms?<br>**Yes**<br>REPAIR the high resistance circuit. For additional information, refer to the wiring diagrams. CLEAR the DTC. TEST the system for normal operation.<br>**No**<br>GO to I7. |
| **I7: CHECK THE BRAKE PEDAL FORCE SWITCH SIGNAL CIRCUIT (NC) FOR SHORT TO GROUND** | |
| | 1 Measure the resistance between FH56, pin 02 (YR) and GROUND. |
| | Is the resistance less than 10,000 ohms?<br>**Yes**<br>REPAIR the short circuit. For additional information, refer to the wiring diagrams. CLEAR the DTC. TEST the system for normal operation.<br>**No**<br>GO to I8. |
| **I8: CHECK THE BRAKE PEDAL FORCE SWITCH SIGNAL CIRCUIT (NO) FOR HIGH RESISTANCE** | |
| | 1 Measure the resistance between FH56, pin 01 (WG) and FH103, pin 31 (WG). |
| | Is the resistance greater than 5 ohms?<br>**Yes**<br>REPAIR the high resistance circuit. For additional information, refer to the wiring diagrams. CLEAR the DTC. TEST the system for normal operation.<br>**No**<br>GO to I9. |
| **I9: CHECK THE BRAKE PEDAL FORCE SWITCH SIGNAL CIRCUIT (NO) FOR SHORT TO GROUND** | |
| | 1 Measure the resistance between FH56, pin 02 (YR) and GROUND. |
| | Is the resistance less than 10,000 ohms?<br>**Yes**<br>REPAIR the short circuit. For additional information, refer to the wiring diagrams. CLEAR the DTC. TEST the system for normal operation.<br>**No**<br>Contact dealer technical support for advice on possible active booster failure. CLEAR the DTC. TEST the system for normal operation. If the DTC is repeated, contact dealer technical support for advice on possible ABS/DSC module failure. |

## PINPOINT TEST J : B1231, C1288, C1440, C1997; PRESSURE SENSOR MAIN/PRIMARY 5 VOLT SUPPLY CIRCUIT FAILURE

• NOTE: Check connectors and pins for damage/corrosion (see visual inspection).

| TEST CONDITIONS | DETAILS/RESULTS/ACTIONS |
|---|---|
| **J1: CHECK THE PRESSURE SENSOR 5 VOLT SUPPLY** | |
| | 1 Turn the ignition switch to the **OFF** position. |
| | 2 Disconnect the pressure sensor electrical connector FH54. |
| | 3 Turn the ignition switch to the **ON** position. |
| | 4 Measure the voltage between FH54, pin 01 (NW) and GROUND. |
| | 5 Measure the voltage between FH54, pin 03 (YB) and GROUND. |
| | Is either voltage less than 5 volts?<br>**Yes**<br>GO to J2.<br>**No**<br>GO to J4. |
| **J2: CHECK THE PRESSURE SENSOR 5 VOLT SUPPLY CIRCUIT FOR HIGH RESISTANCE** | |
| | 1 Turn the ignition switch to the **OFF** position. |
| | 2 Disconnect the ABS/DSC module electrical connector FH103. |
| | 3 Measure the resistance between the FH54, pin 03 (YB) and FH103, pin 18 (YB). |
| | Is the resistance greater than 5 ohms?<br>**Yes**<br>REPAIR the high resistance circuit. For additional information, refer to the wiring diagrams. CLEAR the DTC. TEST the system for normal operation.<br>**No**<br>GO to J3. |
| **J3: CHECK THE PRESSURE SENSOR 5 VOLT SUPPLY CIRCUIT FOR SHORT TO GROUND** | |
| | 1 Measure the resistance between FH54, pin 03 (YB) and GROUND. |
| | Is the resistance less than 10,000 ohms?<br>**Yes**<br>REPAIR the short circuit. For additional information, refer to the wiring diagrams. CLEAR the DTC. TEST the system for normal operation.<br>**No**<br>GO to J6. |
| **J4: CHECK THE GROUND TO THE PRESSURE SENSOR** | |
| | 1 Measure the resistance between FH54, pin 01 (NW) and GROUND. |
| | Is the resistance greater than 5 ohms?<br>**Yes**<br>GO to J5.<br>**No**<br>Contact dealer technical support for advice on possible ABS/DSC module failure. |
| **J5: CHECK THE PRESSURE SENSOR GROUND CIRCUIT FOR HIGH RESISTANCE** | |
| | 1 Measure the resistance between FH54, pin 01 (NW) and FH103, pin 19 (NW). |

GETtheMANUALS.org

| | |
|---|---|
| | Is the resistance greater than 5 ohms?<br>**Yes**<br>REPAIR the high resistance circuit. For additional information, refer to the wiring diagrams. CLEAR the DTC. TEST the system for normal operation.<br>**No**<br>Contact dealer technical support for advice on possible ABS/DSC module failure. |
| **J6: CHECK THE PRESSURE SENSOR GROUND CIRCUIT FOR SHORT TO B+** | |
| | 1 Measure the voltage between the pressure sensor electrical connector FH54, pin 01 (NW) and GROUND. |
| | Is the voltage greater than 3 volts?<br>**Yes**<br>REPAIR the circuit. For additional information, refer to the wiring diagrams. CLEAR the DTC. TEST the system for normal operation.<br>**No**<br>GO to J7. |
| **J7: CHECK THE PRESSURE SENSOR SIGNAL CIRCUIT FOR HIGH RESISTANCE** | |
| | 1 Measure the resistance between FH54, pin 02 (WB) and FH103, pin 20 (WB). |
| | Is the resistance greater than 5 ohms?<br>**Yes**<br>REPAIR the high resistance circuit. For additional information, refer to the wiring diagrams. CLEAR the DTC. TEST the system for normal operation.<br>**No**<br>GO to J8. |
| **J8: CHECK THE PRESSURE SENSOR SIGNAL CIRCUIT FOR SHORT TO GROUND** | |
| | 1 Measure the resistance between FH54, pin 02 (WB) and GROUND. |
| | Is the resistance less than 10,000 ohms?<br>**Yes**<br>REPAIR the short circuit. For additional information, refer to the wiring diagrams. CLEAR the DTC. TEST the system for normal operation.<br>**No**<br>GO to J9. |
| **J9: CHECK THE PRESSURE SENSOR SIGNAL CIRCUIT FOR SHORT TO B+** | |
| | 1 Measure the voltage between FH54, pin 02 (WB) and GROUND. |
| | Is the voltage greater than 5 volts?<br>**Yes**<br>REPAIR the short circuit. For additional information, refer to the wiring diagrams. CLEAR the DTC. TEST the system for normal operation.<br>**No**<br>INSTALL a new pressure sensor.<br>REFER to Brake Master Cylinder Primary Pressure Transducer - in this section.<br>CLEAR the DTC. TEST the system for normal operation. If the DTC is repeated, contact dealer technical support for advice on possible ABS/DSC module failure. |

## PINPOINT TEST K : C2736, B2736, B2739; PEDAL TRAVEL SENSOR CIRCUIT FAILURE

• NOTE: Check connectors and pins for damage/corrosion (see visual inspection).

| TEST CONDITIONS | DETAILS/RESULTS/ACTIONS |
|---|---|
| **K1: CHECK THE PEDAL TRAVEL SENSOR SUPPLY VOLTAGE** | |
| | 1 Disconnect the brake pedal travel sensor electrical connector FH11. |
| | 2 Turn the ignition switch to the **ON** position. |
| | 3 Measure the voltage between FH11, pin 01 (WR) and GROUND. |
| | Is the voltage less than 10 volts?<br>**Yes**<br>GO to K2.<br>**No**<br>GO to K4. |
| **K2: CHECK THE PEDAL TRAVEL SENSOR SUPPLY CIRCUIT FOR HIGH RESISTANCE** | |
| | 1 Turn the ignition switch to the **OFF** position. |
| | 2 Disconnect the ABS/DSC module electrical connector FH103. |
| | 3 Measure the resistance between FH11, pin 01 (WR) and FH103, pin 26 (WR). |
| | Is the resistance greater than 5 ohms?<br>**Yes**<br>REPAIR the high resistance circuit. For additional information, refer to the wiring diagrams. CLEAR the DTC. TEST the system for normal operation.<br>**No**<br>GO to K3. |
| **K3: CHECK THE PEDAL TRAVEL SENSOR SUPPLY CIRCUIT FOR SHORT TO GROUND** | |
| | 1 Measure the resistance between FH11, pin 01 (WR) and GROUND. |
| | Is the resistance less than 10,000 ohms?<br>**Yes**<br>REPAIR the short circuit. For additional information, refer to the wiring diagrams. CLEAR the DTC. TEST the system for normal operation.<br>**No**<br>Contact dealer technical support for advice on possible ABS/DSC module failure. |
| **K4: CHECK THE PEDAL TRAVEL SENSOR GROUND CIRCUIT FOR HIGH RESISTANCE** | |
| | 1 Measure the resistance between FH11, pin 02 (WB) and FH103, pin 24 (WB). |
| | Is the resistance greater than 5 ohms?<br>**Yes**<br>REPAIR the high resistance circuit. For additional information, refer to the wiring diagrams. CLEAR the DTC. TEST the system for normal operation.<br>**No**<br>GO to K5. |
| **K5: CHECK THE PEDAL TRAVEL SENSOR GROUND SUPPLY CIRCUIT** | |
| | 1 Turn the ignition switch to the **OFF** position. |
| | 2 Reconnect the ABS/DSC module electrical connector FH103. |
| | 3 Turn the ignition switch to the **ON** position. |
| | 4 Measure the resistance between FH11, pin 02 (WB) and GROUND. |

SELF-MANUALS.org

| | |
|---|---|
| | Is the resistance greater than 5 ohms?<br>**Yes**<br>Contact dealer technical support for advice on possible ABS/DSC module failure.<br>**No**<br>GO to K6. |
| **K6: CHECK THE PEDAL TRAVEL SENSOR GROUND CIRCUIT FOR SHORT TO B+** | |
| | 1 Measure the voltage between FH11, pin 02 (WB) and GROUND. |
| | Is the voltage greater than 3 volts?<br>**Yes**<br>REPAIR the short circuit. For additional information, refer to the wiring diagrams. CLEAR the DTC. TEST the system for normal operation.<br>**No**<br>GO to K7. |
| **K7: CHECK THE PEDAL TRAVEL SENSOR SIGNAL CIRCUIT FOR HIGH RESISTANCE** | |
| | 1 Turn the ignition switch to the **OFF** position. |
| | 2 Disconnect the ABS/DSC module electrical connector FH103. |
| | 3 Measure the resistance between FH11, pin 03 (W) and FH103, pin 40 (W). |
| | Is the resistance greater than 5 ohms?<br>**Yes**<br>REPAIR the high resistance circuit. For additional information, refer to the wiring diagrams. CLEAR the DTC. TEST the system for normal operation.<br>**No**<br>GO to K8. |
| **K8: CHECK THE PEDAL TRAVEL SENSOR SIGNAL CIRCUIT FOR SHORT TO GROUND** | |
| | 1 Measure the resistance between FH11, pin 03 (W) and GROUND. |
| | Is the resistance less than 10,000 ohms?<br>**Yes**<br>REPAIR the short circuit. For additional information, refer to the wiring diagrams. CLEAR the DTC. TEST the system for normal operation.<br>**No**<br>GO to K9. |
| **K9: CHECK THE PEDAL TRAVEL SENSOR SIGNAL SIGNAL CIRCUIT FOR SHORT TO B+** | |
| | 1 Measure the voltage between FH11, pin 03 (W) and GROUND. |
| | Is the voltage greater than 3 volts?<br>**Yes**<br>REPAIR the short circuit. For additional information, refer to the wiring diagrams. CLEAR the DTC. TEST the system for normal operation.<br>**No**<br>Contact dealer technical support for advice on possible active booster failure.<br>REFER to Section 206-07 Power Brake Actuation.<br>CLEAR the DTC. TEST the system for normal operation. If the DTC is repeated, contact dealer technical support for advice on possible ABS/DSC module failure. |

## PINPOINT TEST L : C1446; BRAKE LIGHT SWITCH CIRCUIT FAILURE

• NOTE: Check the brake light function before beginning pinpoint tests.

• NOTE: Check connectors and pins for damage/corrosion (see visual inspection).

| TEST CONDITIONS | DETAILS/RESULTS/ACTIONS |
|---|---|
| **L1: CHECK THE BRAKE LIGHT SWITCH SUPPLY VOLTAGE** | |
| | 1 Disconnect the brake light switch electrical connector CA37. |
| | 2 Turn the ignition switch to the **ON** position. |
| | 3 Measure the voltage between CA37, pin 01 (NR) and GROUND. |
| | Is the voltage less than 10 volts?<br>**Yes**<br>REPAIR the circuit between the battery and the brake light switch electrical connector CA37, pin 01 (NR). This circuit includes the Primary junction fuse box (fuse 35). For additional information, refer to the wiring diagrams. CLEAR the DTC. TEST the system for normal operation.<br>**No**<br>GO to L2. |
| **L2: CHECK THE BRAKE LIGHT SWITCH OUTPUT VOLTAGE** | |
| | 1 Turn the ignition switch to the **OFF** position. |
| | 2 Disconnect the battery ground cable. |
| | 3 Disconnect the engine control module (ECM) electrical connector PI01. |
| | 4 Reconnect the battery ground cable. |
| | 5 Turn the ignition switch to the **ON** position. |
| | 6 Depress the brake pedal. |
| | 7 Measure the voltage between PI01, pin 08 (GO) and GROUND. |
| | Is the voltage less than 10 volts?<br>**Yes**<br>GO to L3.<br>**No**<br>Contact dealer technical support for advice on possible engine control module (ECM) failure. |
| **L3: CHECK THE BRAKE LIGHT SWITCH OUTPUT CIRCUIT FOR HIGH RESISTANCE** | |
| | 1 Measure the resistance between CA37, pin 02 (GO), and PI01, pin 08 (GO). |
| | Is the resistance greater than 5 ohms?<br>**Yes**<br>REPAIR the high resistance circuit. This circuit includes the splice CAS22. For additional information, refer to the wiring diagrams. CLEAR the DTC. TEST the system for normal operation.<br>**No**<br>INSTALL a new brake light switch. CLEAR the DTC. TEST the system for normal operation. |

GETtheMANUALS.org

# Anti-Lock Control - Stability Assist - Anti-Lock Control - Stability AssistVIN Range: N52207->N99999

Diagnosis and Testing

## Overview

There are some changes for 2006 my, the most obvious of which when diagnosing the system is the change to 7-digit diagnostic trouble codes (DTCs) from the familiar 5-digit.

Refer to the DTC index in this section for guidance on how to use these codes with the Jaguar approved diagnostic system or a scan tool.

For information on the operation of the system,
REFER to: Anti-Lock Control - Stability Assist - VIN Range: N52048->N99999 (206-09 Anti-Lock Control - Stability Assist, Description and Operation).

## Inspection and Verification

1. **1.** Verify the customer concern.
2. **2.** Confirm if the ABS warning light was illuminated, or still is.

• NOTE: An intermittent fault may allow the warning light to go off. This does not necessarily mean the fault is not present. Some warnings will appear to clear when the ignition is cycled. This is often because the warning has flagged as a result of one of the vehicle's on-board diagnostic routines having run to detect the fault. If the same routine is not run when the ignition is switched **ON**, the warning will not reflag until the routine does run.

3. **3.** Visually inspect for obvious signs of mechanical or electrical damage.

| Mechanical | Electrical |
|---|---|
| • Brake fluid level<br>• Vacuum system<br>• Wheel speed sensor fitment<br>• Wheel speed sensor air gap<br>• Wheel speed sensor ring(s) (missing or damaged teeth/contamination)<br>• Steering wheel rotation sensor<br>• Yaw rate sensor and accelerometer cluster fitment<br>• Incorrect wheel or tire size | • Warning light operation<br>• Fuses (see table)<br>• Wheel speed sensors<br>• Connectors/Pins<br>• Harnesses<br>• Steering wheel rotation sensor<br>• Yaw rate sensor and accelerometer cluster<br>• Booster pressure sensor<br>• Hydraulic control module (HCU) |

4. **4.** If an obvious cause for an observed or reported concern is found, correct the cause (if possible) before proceeding to the next step.
5. **5.** If the cause is not visually evident use the Jaguar approved diagnostic system or a scan tool to retrieve the fault codes before proceeding to the DTC index chart.

## Fuse Identification Table

| Location | Fuse Number | Rating | Circuit |
|---|---|---|---|
| Front power distribution fuse box | 28 | 40 Amp | HCU pump battery supply |
| Front power distribution fuse box | 01 | 5 Amp | HCU module battery supply |
| Front power distribution fuse box | 04 | 20 Amp | HCU valve battery supply |
| Primary junction fuse box | 03 | 5 Amp | HCU module ignition supply |
| Primary junction fuse box | 04 | 5 Amp | ABS warning light |

## DTC Index

• NOTE: Generic scan tools may not read the codes listed, or may read only 5-digit codes. Match the 5 digits from the scan tool to the first 5 digits of the 7-digit code listed to identify the fault (the last 2 digits give extra information read by the manufacturer-approved diagnostic system).

| DTC | Description | Possible cause | Action |
|---|---|---|---|
| C000101 | TCS control channel A valve 1 | • Internal HCU fault | Refer to the warranty policy and procedures manual if a module is suspect. |
| C000201 | TCS control channel A valve 2 | • Internal HCU fault | Refer to the warranty policy and procedures manual if a module is suspect. |
| C000301 | TCS control channel B valve 1 | • Internal HCU fault | Refer to the warranty policy and procedures manual if a module is suspect. |
| C000401 | TCS control channel B valve 2 | • Internal HCU fault | Refer to the warranty policy and procedures manual if a module is suspect. |
| C001001 | Left hand front outlet control | • Internal HCU fault | Refer to the warranty policy and procedures manual if a module is suspect. |
| C001101 | Left hand front outlet control | • Internal HCU fault | Refer to the warranty policy and procedures manual if a module is suspect. |
| C00117A | Left hand front outlet control | • Fluid leak<br>• Seal failure | Check the brake fluid condition. Check the hydraulic system for leaks. |
| C001401 | Right hand front inlet control | • Internal HCU fault | Refer to the warranty policy and procedures manual if a module is suspect. |
| C001501 | Right hand front outlet control | • Internal HCU fault | Refer to the warranty policy and procedures manual if a module is suspect. |
| C00157A | Right hand front outlet control | • Internal HCU fault | Check the brake fluid condition. Check the hydraulic system for leaks. |
| C001801 | Left hand rear inlet control | • Internal HCU fault | Refer to the warranty policy and procedures manual if a module is suspect. |
| C001901 | Left hand rear outlet control | • Internal HCU fault | Refer to the warranty policy and procedures manual if a module is suspect. |

GETtheMANUALS.org

| DTC | Description | Possible cause | Action |
|---|---|---|---|
| C001C01 | Right hand rear inlet control | • Internal HCU fault | Refer to the warranty policy and procedures manual if a module is suspect. |
| C001D01 | Right hand rear outlet control | • Internal HCU fault | Refer to the warranty policy and procedures manual if a module is suspect. |
| C002001 | ABS pump motor control - excessive volt drop | • Power supply to pump motor: short circuit<br>• Power supply to pump motor: incorrect voltage<br>• Pump ground circuit fault<br>• Mechanical pump fault | Refer to the warranty policy and procedures manual if a module is suspect. |
| C00201C | ABS pump motor control - voltage out of range | • Power supply to pump motor: high resistance<br>• Power supply to pump motor: short circuit<br>• Pump ground circuit fault<br>• Internal solid-state fault caused by ground circuit fault | Refer to the warranty policy and procedures manual if a module is suspect. |
| C002071 | ABS pump motor control - actuator stuck | • Power supply to pump motor: high resistance<br>• Power supply to pump motor: short circuit<br>• Mechanical pump fault | For power supply circuit tests, GO to Pinpoint Test C. If the power and ground circuits are OK, refer to the warranty policy and procedures manual if a module is suspect. No physical test of the pump is possible. |
| C002201 | Brake booster fault | • Vacuum circuit fault<br>• Booster fault | For a mechanical check of the vacuum booster function. GO to Pinpoint Test A. |
| C003007 | Left hand front wheel speed sensor ring | • Contamination or debris on the wheel speed sensor ring<br>• Wheel speed sensor ring distorted<br>• Excessive vibration | Check the wheel speed sensor ring for damage/contamination (the sensor ring is part of the hub and can only be inspected by removing the sensor).<br>REFER to: Front Wheel Speed Sensor (206-09 Anti-Lock Control - Stability Assist, Removal and Installation).<br>Check the steering and suspension for excessive play which could cause vibration. |
| C003101 | Left hand front wheel speed sensor (WSS) - signal current out of range | • WSS signal circuit: short circuit to ground<br>• WSS signal circuit: short circuit to power<br>• WSS signal circuit: high resistance | For left hand front WSS tests, GO to Pinpoint Test D. |
| C003107 | Left hand front wheel speed sensor (WSS) - mechanical fault | • WSS faulty/incorrectly installed<br>• WSS or ring missing/damaged<br>• Excessive gap between sensor and ring<br>• Incorrect ring (number of teeth) | Check the condition and fitment of the WSS.<br>REFER to: Front Wheel Speed Sensor (206-09 Anti-Lock Control - Stability Assist, Removal and Installation).<br>Check the wheel speed sensor ring for damage/contamination.<br>Check the steering and suspension for excessive play. Check the WSS ring for correct specification. |
| C003307 | Right hand front wheel speed sensor ring | • Contamination or debris on the wheel speed sensor ring<br>• Wheel speed sensor ring distorted<br>• Excessive vibration | Check the wheel speed sensor ring for damage/contamination (the sensor ring is part of the hub and can only be inspected by removing the sensor).<br>REFER to: Front Wheel Speed Sensor (206-09 Anti-Lock Control - Stability Assist, Removal and Installation).<br>Check the steering and suspension for excessive play which could cause vibration. |
| C003401 | Right hand front wheel speed sensor (WSS) - signal current out of range | • WSS signal circuit: short circuit to ground<br>• WSS signal circuit: short circuit to power<br>• WSS signal circuit: high resistance | For right hand front WSS tests, GO to Pinpoint Test E. |
| C003407 | Right hand front wheel speed sensor (WSS) - mechanical fault | • WSS faulty/incorrectly installed<br>• WSS or ring missing/damaged<br>• Excessive gap between sensor and ring<br>• Incorrect ring (number of teeth) | Check the condition and fitment of the WSS.<br>REFER to: Front Wheel Speed Sensor (206-09 Anti-Lock Control - Stability Assist, Removal and Installation).<br>Check the wheel speed sensor ring for damage/contamination.<br>Check the steering and suspension for excessive play. Check the WSS ring for correct specification. |
| C003607 | Left hand rear wheel speed sensor ring | • Contamination or debris on the wheel speed sensor ring<br>• Wheel speed sensor ring distorted<br>• Excessive vibration | Check the wheel speed sensor ring for damage/contamination.<br>Check the suspension for excessive play which could cause vibration. |
| C003701 | Left hand rear wheel speed sensor (WSS) - signal current out of range | • WSS signal circuit: short circuit to ground<br>• WSS signal circuit: short circuit to power<br>• WSS signal circuit: high resistance | For left hand rear WSS tests, GO to Pinpoint Test F. |
| C003707 | Left hand rear wheel speed sensor (WSS) - mechanical fault | • WSS faulty/incorrectly installed<br>• WSS or ring missing/damaged<br>• Excessive gap between sensor and ring<br>• Incorrect ring (number of teeth) | Check the condition and fitment of the WSS.<br>REFER to: Rear Wheel Speed Sensor (206-09 Anti-Lock Control - Stability Assist, Removal and Installation).<br>Check the wheel speed sensor ring for damage/contamination.<br>Check the suspension for excessive play. Check the WSS ring for correct specification. |

GETtheMANUALS.org

| DTC | Description | Possible cause | Action |
|---|---|---|---|
| C003907 | Right hand rear wheel speed sensor ring | • Contamination or debris on the wheel speed sensor ring<br>• Wheel speed sensor ring distorted<br>• Excessive vibration | Check the wheel speed sensor ring for damage/contamination. Check the suspension for excessive play which could cause vibration. |
| C003A01 | Right hand rear wheel speed sensor (WSS) - signal current out of range | • WSS signal circuit: short circuit to ground<br>• WSS signal circuit: short circuit to power<br>• WSS signal circuit: high resistance | For right hand rear WSS tests, GO to Pinpoint Test G. |
| C003A07 | Right hand rear wheel speed sensor (WSS) - mechanical fault | • WSS faulty/incorrectly installed<br>• WSS or ring missing/damaged<br>• Excessive gap between sensor and ring<br>• Incorrect ring (number of teeth) | Check the condition and fitment of the WSS.<br>REFER to: Rear Wheel Speed Sensor (206-09 Anti-Lock Control - Stability Assist, Removal and Installation).<br>Check the wheel speed sensor ring for damage/contamination. Check the suspension for excessive play. Check the WSS ring for correct specification. |
| C004064 | Brake pedal switch | • Brake pedal switch circuit: short circuit to ground<br>• Brake pedal switch circuit: short circuit to power<br>• Brake pedal switch circuit: high resistance<br>• Brake pedal switch failure | For brake switch circuit tests, GO to Pinpoint Test B. |
| C004401 | Brake pressure sensor A | • Sensor failure<br>- The sensor is internal to the control module | Refer to the warranty policy and procedures manual if a module is suspect. |
| C004428 | Brake pressure sensor | • Sensor failure<br>- The sensor is internal to the control module | Refer to the warranty policy and procedures manual if a module is suspect. |
| C004464 | Brake pressure sensor | • Sensor failure<br>- The sensor is internal to the control module | Refer to the warranty policy and procedures manual if a module is suspect. |
| C00447A | Brake pressure sensor - cross check failure | • Internal hydraulic leak/seal failure | Refer to the warranty policy and procedures manual if a module is suspect. |
| C004701 | Booster pressure sensor | • Booster pressure sensor circuit: short circuit to ground<br>• Booster pressure sensor circuit: short circuit to power<br>• Booster pressure sensor circuit: high resistance<br>• Booster pressure sensor failure | For booster pressure sensor tests, GO to Pinpoint Test H. |
| C004728 | Booster pressure sensor | • Booster pressure sensor circuit: short circuit to ground<br>• Booster pressure sensor circuit: short circuit to power<br>• Booster pressure sensor circuit: high resistance<br>• Booster pressure sensor failure | For booster pressure sensor tests, GO to Pinpoint Test H. |
| C004762 | Booster pressure sensor | • Brake hydraulic circuit failure<br>• Booster pressure sensor failure | Check the brake hydraulic circuits. Check the master cylinder, etc.<br>REFER to: Brake System - VIN Range: N13089->N99999 (206-00, Diagnosis and Testing). |
| C004764 | Booster pressure sensor | • Booster pressure sensor circuit: short circuit to ground<br>• Booster pressure sensor circuit: short circuit to power<br>• Booster pressure sensor circuit: high resistance<br>• Booster pressure sensor failure | For booster pressure sensor tests, GO to Pinpoint Test H. |
| C005101 | Steering wheel rotation sensor | • Sensor power circuit fault<br>• Sensor ground circuit fault<br>• Sensor signal circuit fault<br>• Steering wheel rotation sensor fault | For steering wheel rotation sensor tests, GO to Pinpoint Test I. |
| C005102 | Steering wheel rotation sensor | • Sensor power circuit fault<br>• Sensor ground circuit fault<br>• Sensor signal circuit fault<br>• Sensor loose/incorrectly installed<br>• Encoder wheel misaligned or faulty<br>• Steering wheel rotation sensor fault | Check the sensor and encoder wheel for correct fitment/alignment.<br>REFER to: Steering Wheel Rotation Sensor (206-09 Anti-Lock Control - Stability Assist, Removal and Installation).<br>For steering wheel rotation sensor tests, GO to Pinpoint Test I. |
| C005128 | Steering wheel rotation sensor - offset monitoring | • Sensor loose/incorrectly installed<br>• Vehicle track incorrectly adjusted | Check the sensor and encoder wheel for correct fitment/alignment.<br>REFER to: Steering Wheel Rotation Sensor (206-09 Anti-Lock Control - Stability Assist, Removal and Installation).<br>Check the steering and suspension for damage/wear which would affect the track. |

GETtheMANUAL.org

| DTC | Description | Possible cause | Action |
|---|---|---|---|
| C005167 | Steering wheel rotation sensor | • Center position not learnt/lost<br>• Implausible signals from other sensors (yaw rate, lateral acceleration, wheel speed sensors) | Cycle the ignition off and on, drive the vehicle in a straight line for three seconds at a speed higher than 50 Kmh (31 Mph) to learn the center position. Check the sensors listed for correct fitment/damage. Check for DTCs indicating a sensor fault. |
| C005192 | Steering wheel rotation sensor | • Sensor apertures blocked<br>• Encoder wheel misaligned or faulty<br>• Sensor fault | Check the sensor and encoder wheel for correct fitment/alignment and condition.<br>REFER to: Steering Wheel Rotation Sensor (206-09 Anti-Lock Control - Stability Assist, Removal and Installation). |
| C005195 | Steering wheel rotation sensor | • Sensor incorrectly assembled - Circuit incorrectly connected | For steering wheel rotation sensor tests, GO to Pinpoint Test I. |
| C005196 | Steering wheel rotation sensor | • Sensor circuit(s): short circuit to each other<br>• Sensor fault | For steering wheel rotation sensor tests, GO to Pinpoint Test I. |
| C006101 | Yaw rate sensor and accelerometer | • Sensor fault | Install a new sensor.<br>REFER to: Yaw Rate Sensor and Accelerometer (206-09 Anti-Lock Control - Stability Assist, Removal and Installation). |
| C006128 | Yaw rate sensor and accelerometer | • Sensor incorrectly calibrated<br>• Sensor fault | Carry out the yaw rate sensor reset special application using the Jaguar approved diagnostic system. Clear the DTC and drive the vehicle to a speed greater than 20 kmh (12.5 mph) for more than 3 seconds to confirm the fix. |
| C006164 | Yaw rate sensor and accelerometer | • Sensor loose/incorrectly installed<br>• Sensor ground circuit: high resistance<br>• Sensor fault | Check the sensor for correct installation.<br>REFER to: Yaw Rate Sensor and Accelerometer (206-09 Anti-Lock Control - Stability Assist, Removal and Installation).<br>For yaw rate sensor and accelerometor tests, GO to Pinpoint Test J. |
| C006301 | Yaw rate sensor and accelerometer | • Sensor fault | Install a new sensor.<br>REFER to: Yaw Rate Sensor and Accelerometer (206-09 Anti-Lock Control - Stability Assist, Removal and Installation). |
| C006328 | Yaw rate sensor and accelerometer | • Sensor incorrectly calibrated<br>• Sensor fault | Carry out the yaw rate sensor reset special application using the Jaguar approved diagnostic system. Clear the DTC and drive the vehicle to a speed greater than 20 kmh (12.5 mph) for more than 3 seconds to confirm the fix. |
| C006364 | Yaw rate sensor and accelerometer | • Sensor loose/incorrectly installed<br>• Sensor ground circuit: high resistance<br>• Sensor fault | Check the sensor for correct installation.<br>REFER to: Yaw Rate Sensor and Accelerometer (206-09 Anti-Lock Control - Stability Assist, Removal and Installation).<br>For yaw rate sensor and accelerometor tests, GO to Pinpoint Test J. |
| C006A01 | Yaw rate sensor and accelerometer | • Sensor supply circuit: high resistance<br>• Sensor fault | For yaw rate sensor and accelerometor tests, GO to Pinpoint Test J. |
| C006A04 | Yaw rate sensor and accelerometer | • Sensor supply circuit: short circuit to power<br>• Sensor supply circuit: short circuit to ground<br>• Sensor supply circuit: high resistance<br>• Sensor failure | For yaw rate sensor and accelerometor tests, GO to Pinpoint Test J. |
| C006A16 | Yaw rate sensor and accelerometer - low voltage detected | • Sensor supply circuit: short circuit to power<br>• Sensor supply circuit: short circuit to ground<br>• Sensor supply circuit: high resistance<br>• Sensor failure | For yaw rate sensor and accelerometor tests, GO to Pinpoint Test J. |
| C006A17 | Yaw rate sensor and accelerometer - high voltage detected | • Sensor supply circuit: short circuit to power<br>• Sensor failure | For yaw rate sensor and accelerometor tests, GO to Pinpoint Test J. |
| C006A47 | Yaw rate sensor and accelerometer | • Watchdog/Safety failure | Install a new sensor.<br>REFER to: Yaw Rate Sensor and Accelerometer (206-09 Anti-Lock Control - Stability Assist, Removal and Installation). |
| C006A95 | Yaw rate sensor and accelerometer | • Incorrect part fitted | Install a new sensor.<br>REFER to: Yaw Rate Sensor and Accelerometer (206-09 Anti-Lock Control - Stability Assist, Removal and Installation). |
| C006B00 | Yaw rate sensor and accelerometer | • Sensor failure | Install a new sensor.<br>REFER to: Yaw Rate Sensor and Accelerometer (206-09 Anti-Lock Control - Stability Assist, Removal and Installation). |
| C008247 | Hydraulic control module fault | • Internal HCU failure | Refer to the warranty policy and procedures manual if a module is suspect. |
| C008248 | Hydraulic control module fault | • Internal HCU failure | Refer to the warranty policy and procedures manual if a module is suspect. |
| C008249 | Hydraulic control module fault | • Internal HCU failure | Refer to the warranty policy and procedures manual if a module is suspect. |
| C008254 | Yaw rate sensor and accelerometer | • Calibration failure | Carry out the yaw rate sensor reset special application using the Jaguar approved diagnostic system. Clear the DTC and retest. |
| C110801 | Internal pressure sensor fault | • Internal HCU failure | Refer to the warranty policy and procedures manual if a module is suspect. |

GETtheMANUALS.org

| DTC | Description | Possible cause | Action |
|---|---|---|---|
| C110964 | Traction control switch | • Traction control switch stuck<br>• Power supply circuit fault(s) | For traction control switch tests, GO to Pinpoint Test K. |
| C113301 | Internal pressure sensor fault | • Internal HCU failure | Refer to the warranty policy and procedures manual if a module is suspect. |
| C113328 | Left hand front brake pressure sensor | • Internal HCU failure | Refer to the warranty policy and procedures manual if a module is suspect. |
| C113364 | Left hand front brake pressure sensor | • Internal HCU failure | Refer to the warranty policy and procedures manual if a module is suspect. |
| C113401 | Right hand front brake pressure sensor | • Internal HCU failure | Refer to the warranty policy and procedures manual if a module is suspect. |
| C113428 | Right hand front brake pressure sensor | • Internal HCU failure | Refer to the warranty policy and procedures manual if a module is suspect. |
| C113464 | Right hand front brake pressure sensor | • Internal HCU failure | Refer to the warranty policy and procedures manual if a module is suspect. |
| B10DF46 | Master cylinder isolation valve | • Valve not calibrated<br>- Internal HCU fault | The valve values cannot be calibrated in service. Refer to the warranty policy and procedures manual if a module is suspect. |
| U000100 | CAN communication bus | • Isolated CAN communication error<br>• CAN circuit fault<br>• Internal HCU failure | Clear the DTCs, retest. If CAN fault codes reset,<br>REFER to: Communications Network - VIN Range: N52048->N99999 (418-00 Module Communications Network, Diagnosis and Testing). |
| U000168 | CAN communication software error | • Isolated CAN communication error<br>• Internal HCU failure | Clear the DTCs, retest. If CAN fault codes reset,<br>REFER to: Communications Network - VIN Range: N52048->N99999 (418-00 Module Communications Network, Diagnosis and Testing). |
| U010000 | Lost communication with ECM | • Isolated CAN communication error<br>• CAN circuit fault | Clear the DTCs, retest. If CAN fault codes reset,<br>REFER to: Communications Network - VIN Range: N52048->N99999 (418-00 Module Communications Network, Diagnosis and Testing). |
| U010400 | Lost communication with speed control module | • Isolated CAN communication error<br>• CAN circuit fault | Clear the DTCs, retest. If CAN fault codes reset,<br>REFER to: Communications Network - VIN Range: N52048->N99999 (418-00 Module Communications Network, Diagnosis and Testing). |
| U012500 | Lost communication with yaw rate sensor and accelerometer | • Isolated CAN communication error<br>• Local CAN circuit fault<br>• Sensor failure | Clear the DTCs, retest. If CAN fault codes reset,<br>REFER to: Communications Network - VIN Range: N52048->N99999 (418-00 Module Communications Network, Diagnosis and Testing). |
| U012588 | Lost communication with yaw rate sensor and accelerometer | • Isolated CAN communication error<br>• Local CAN circuit fault<br>• Sensor failure | Clear the DTCs, retest. If CAN fault codes reset,<br>REFER to: Communications Network - VIN Range: N52048->N99999 (418-00 Module Communications Network, Diagnosis and Testing). |
| U01550 | Lost communication with instrument pack module | • Isolated CAN communication error<br>• CAN circuit fault | Clear the DTCs, retest. If CAN fault codes reset,<br>REFER to: Communications Network - VIN Range: N52048->N99999 (418-00 Module Communications Network, Diagnosis and Testing). |
| U030000 | Control module software incompatibility | • Configuration data not received from EMS<br>• Configuration data received is not compatible with the DSC module | Confirm that the configuration data for the EMS is correct.<br>Confirm that the correct DSC module is installed. |
| U030005 | Control module software error | • Internal HCU software error | Refer to the warranty policy and procedures manual if a module is suspect. |
| U030055 | Stored vehicle configuration data does not match | • Configuration data received is different from the previous key cycle<br>• Control module swapped from another vehicle | Confirm the vehicle configuration. Reconfigure the module using the Jaguar approved diagnostic system |
| U030087 | Received vehicle configuration data does not match | • Configuration data received is different from the modules seen on the network<br>• Control module swapped from another vehicle | Confirm the vehicle configuration. Reconfigure the module using the Jaguar approved diagnostic system |
| U040164 | Invalid data received from the ECM | • Invalid data | Check for engine management DTCs.<br>REFER to: Electronic Engine Controls - VIN Range: N80181->R99999 (303-14A Electronic Engine Controls - 2.5L NA V6 - AJV6/3.0L NA V6 - AJ27, Diagnosis and Testing).<br>or<br>REFER to: Electronic Engine Controls - VIN Range: N80181->R99999 (303-14B Electronic Engine Controls - V8 4.2L Petrol/V8 S/C 4.2L Petrol, Diagnosis and Testing). |
| U040192 | Torque request denied by the ECM | • Engine management fault detected | Check for engine management DTCs.<br>REFER to: Electronic Engine Controls - VIN Range: N80181->R99999 (303-14A Electronic Engine Controls - 2.5L NA V6 - AJV6/3.0L NA V6 - AJ27, Diagnosis and Testing).<br>or<br>REFER to: Electronic Engine Controls - VIN Range: N80181->R99999 (303-14B Electronic Engine Controls - V8 4.2L Petrol/V8 S/C 4.2L Petrol, Diagnosis and Testing). |
| U040200 | TCM messages not received in the specified time | • Isolated CAN communication error<br>• CAN circuit fault | Clear the DTCs, retest. If CAN fault codes reset,<br>REFER to: Communications Network - VIN Range: N52048->N99999 (418-00 Module Communications Network, Diagnosis and Testing). |

GETtheMANUALS.org

| DTC | Description | Possible cause | Action |
|---|---|---|---|
| U040264 | Invalid data received from the TCM | • Invalid data received from the TCM | Check for transmission DTCs.<br>REFER to: Diagnostic Strategy - VIN Range: N52048->N99999 (307-01 Automatic Transmission/Transaxle, Diagnosis and Testing). |
| U040592 | Fault declared by the speed control module | • ACC fault detected by the speed control module | Check for speed control DTCs.<br>REFER to: Speed Control - VIN Range: N52048->N99999 (310-03 Speed Control, Diagnosis and Testing). |
| U042300 | Missing reverse gear signal | • Isolated CAN communication error<br>• CAN circuit fault | Clear the DTCs, retest. If CAN fault codes reset,<br>REFER to: Communications Network - VIN Range: N52048->N99999 (418-00 Module Communications Network, Diagnosis and Testing). |
| U210868 | Speed control vehicle deceleration implausible | • Braking requested by speed control exceeds allowed threshold | Check for speed control DTCs.<br>REFER to: Speed Control - VIN Range: N52048->N99999 (310-03 Speed Control, Diagnosis and Testing). |
| U300316 | Battery voltage low | • HCU supply circuit fault(s)<br>• Internal HCU failure | For module supply and ground tests, GO to Pinpoint Test C. |
| U300317 | Battery voltage high | • HCU supply circuit fault(s)<br>• Charging system fault(s) | For module supply and ground tests, GO to Pinpoint Test C. |

## Pinpoint tests

### PINPOINT TEST A : BRAKE VACUUM ASSIST FUNCTION

WARNING: For the following checks, make sure the vehicle is in neutral or park for vehicles with automatic transmission and that the parking brake is applied. Failure to follow this instruction may result in personal injury.

| TEST CONDITIONS | DETAILS/RESULTS/ACTIONS |
|---|---|
| **A1: CHECK THE BRAKE PEDAL TRAVEL WITH THE ENGINE OFF** | |
| | 1 Key off. |
| | 2 Pump the brake pedal six times and hold firm pressure on the pedal. |
| | Did the pedal travel decrease and the pedal go hard as it was pumped?<br>**Yes**<br>GO to A2.<br>**No**<br>CHECK the vacuum circuit to the brake booster. Start the engine and idle for three minutes, switch off then repeat the test. If the pedal travel does not decrease, suspect the brake booster. |
| **A2: CHECK THE BRAKE PEDAL TRAVEL WITH THE ENGINE RUNNING** | |
| | 1 With firm pressure still held on the brake pedal, start the engine. |
| | Did the pedal travel increase as the engine started?<br>**Yes**<br>The vacuum function of the brake booster is operating normally. Check for DTCs indicating a fault elsewhere in the system.<br>**No**<br>CHECK the vacuum circuit to the brake booster. |

### PINPOINT TEST B : BRAKE SWITCH

| TEST CONDITIONS | DETAILS/RESULTS/ACTIONS |
|---|---|
| **B1: CHECK THE OPERATION OF THE BRAKE SWITCH (PEDAL RELEASED)** | |
| 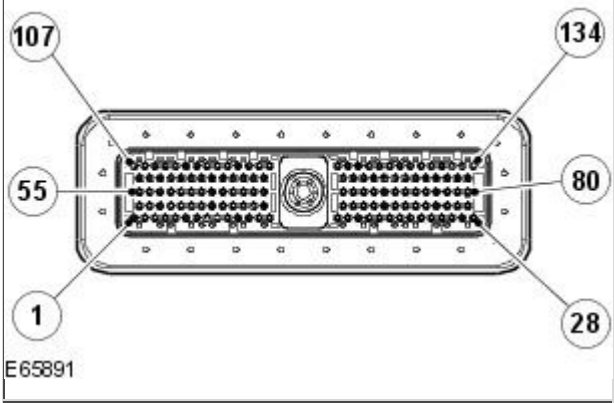 | **Engine control module (ECM), FH300**<br>Circuit: Brake light switch — Pin: 41 |
| 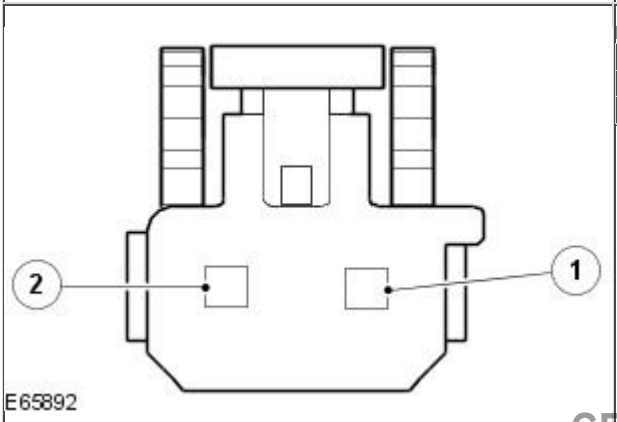 | **Brake light switch, CA037**<br>Circuit: Power supply — Pin: 01<br>Circuit: Signal — Pin: 02 |
| | 1 Key off.<br>2 Disconnect the brake switch electrical connector, CA037. |

GETtheMANUALS.org

| | |
|---|---|
| | 3 Make sure the brake pedal is not pressed.<br>4 Measure the resistance between:<br>**Brake switch connector CA037, component side** — **Brake switch connector CA037, component side**<br>Pin 01 — Pin 02 |
| | Is the resistance greater than 10 ohms?<br>**Yes**<br>GO to B2.<br>**No**<br>INSTALL a new brake switch. CLEAR the DTC, test the system for normal operation. |
| **B2: CHECK THE OPERATION OF THE BRAKE SWITCH (PEDAL PRESSED)** | |
| | 1 Press the brake pedal.<br>2 Measure the resistance between:<br>**Brake switch connector CA037, component side** — **Brake switch connector CA037, component side**<br>Pin 01 — Pin 02 |
| | Is the resistance greater than 10 ohms?<br>**Yes**<br>INSTALL a new brake switch. CLEAR the DTC, test the system for normal operation.<br>**No**<br>GO to B3. |
| **B3: CHECK THE POWER SUPPLY TO THE BRAKE PEDAL SWITCH** | |
| | 1 Key on, engine off.<br>2 Measure the voltage between:<br>**Brake switch connector CA037, harness side** — **Battery**<br>Pin 01 — Negative terminal |
| | Is the voltage less than 10 volts?<br>**Yes**<br>REPAIR the circuit between the brake switch and battery. This circuit includes fuse 35 of the primary junction box. For additional information, refer to the wiring diagrams. CLEAR the DTC, test the system for normal operation.<br>**No**<br>GO to B4. |
| **B4: CHECK THE BRAKE SWITCH SIGNAL CIRCUIT FOR SHORT CIRCUIT TO GROUND** | |
| | 1 Key off.<br>2 Measure the resistance between:<br>**Brake switch connector CA037, harness side** — **Battery**<br>Pin 02 — Negative terminal |
| | Is the resistance less than 100 Kohms?<br>**Yes**<br>REPAIR the short circuit. For additional information, refer to the wiring diagrams. CLEAR the DTC, test the system for normal operation.<br>**No**<br>GO to B5. |
| **B5: CHECK THE BRAKE SWITCH SIGNAL CIRCUIT FOR SHORT CIRCUIT TO POWER** | |
| | 1 Measure the resistance between:<br>**Brake switch connector CA037, harness side** — **Battery**<br>Pin 02 — Positive terminal |
| | Is the resistance less than 100 Kohms?<br>**Yes**<br>REPAIR the short circuit. For additional information, refer to the wiring diagrams. CLEAR the DTC, test the system for normal operation.<br>**No**<br>GO to B6. |
| **B6: CHECK THE BRAKE SWITCH SIGNAL CIRCUIT FOR HIGH RESISTANCE** | |
| | 1 Disconnect the ECM electrical connector, FH300.<br>2 Measure the resistance between:<br>**Brake switch connector CA037, harness side** — **ECM connector FH300, harness side**<br>Pin 02 — Pin 41 |
| | Is the resistance less than 10 ohms?<br>**Yes**<br>CHECK for CAN DTCs indicating a network fault.<br>**No**<br>REPAIR the high resistance circuit. For additional information, refer to the wiring diagrams. CLEAR the DTC. TEST the system for normal operation. |

| **PINPOINT TEST C : MODULE SUPPLIES AND GROUNDS** | |
|---|---|
| **TEST CONDITIONS** | **DETAILS/RESULTS/ACTIONS** |
| **C1: CHECK THE MODULE PUMP SUPPLY** | |

GETtheMANUALS.org

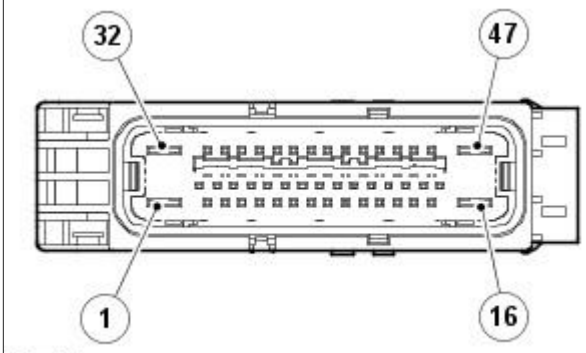

E65715

**ABS module connector, FH103**

| Circuit | Pin |
|---|---|
| Pump supply | 01 |
| Valves supply | 32 |
| Batt supply | 02 |
| Ignition supply | 08 |
| Pump ground | 47 |
| Valve ground | 16 |

1 Key off.

2 Disconnect the ABS module connector, FH103.

3 Measure the voltage between:

| FH103, harness side | Battery |
|---|---|
| Pump supply, pin 01 | Negative terminal |

Is the voltage between 9 and 15 volts?

**Yes**

GO to C2.

**No**

REPAIR the supply circuit as necessary. This circuit includes fuse 29 of the front power distribution box. For additional information, refer to the wiring diagrams. Clear the DTC, test the system for normal operation.

**C2: CHECK THE MODULE VALVES SUPPLY**

1 Measure the voltage between:

| FH103, harness side | Battery |
|---|---|
| Valves supply, pin 32 | Negative terminal |

Is the voltage between 9 and 15 volts?

**Yes**

GO to C3.

**No**

REPAIR the supply circuit as necessary. This circuit includes fuse 04 of the front power distribution box. For additional information, refer to the wiring diagrams. Clear the DTC, test the system for normal operation.

**C3: CHECK THE MODULE BATT SUPPLY**

1 Measure the voltage between:

| FH103, harness side | Battery |
|---|---|
| Batt supply, pin 02 | Negative terminal |

Is the voltage between 9 and 15 volts?

**Yes**

GO to C4.

**No**

REPAIR the supply circuit as necessary. This circuit includes fuse 01 of the front power distribution box. For additional information, refer to the wiring diagrams. Clear the DTC, test the system for normal operation.

**C4: CHECK THE MODULE IGNITION SUPPLY**

1 Key on, engine off.

2 Measure the voltage between:

| FH103, harness side | Battery |
|---|---|
| Ignition supply, pin 08 | Negative terminal |

Is the voltage between 9 and 15 volts?

**Yes**

GO to C5.

**No**

REPAIR the supply circuit as necessary. This circuit includes fuse 03 of the primary junction box. For additional information, refer to the wiring diagrams. Clear the DTC, test the system for normal operation.

**C5: CHECK THE PUMP GROUND**

1 Key off.

2 Measure the resistance between:

| FH103, harness side | Battery |
|---|---|
| Pump ground, pin 47 | Negative terminal |

Is the resistance less than 10 ohms?

**Yes**

GO to C6.

**No**

REPAIR the ground circuit as necessary. For additional information, refer to the wiring diagrams. Clear the DTC, test the system for normal operation.

**C6: CHECK THE VALVE GROUND**

1 Measure the resistance between:

| FH103, harness side | Battery |
|---|---|
| Valve ground, pin 16 | Negative terminal |

Is the resistance less than 10 ohms?

**Yes**

Refer to the warranty policy and procedures manual if a module is suspect.

**No**

REPAIR the ground circuit as necessary. For additional information, refer to the wiring diagrams. Clear the DTC, test the system for normal operation.

GETtheMANUALS.org

## PINPOINT TEST D : LEFT HAND FRONT WHEEL SPEED SENSOR (WSS)

| TEST CONDITIONS | DETAILS/RESULTS/ACTIONS |
|---|---|

**D1: CHECK THE WSS RETURN CIRCUIT FOR SHORT CIRCUIT TO GROUND**

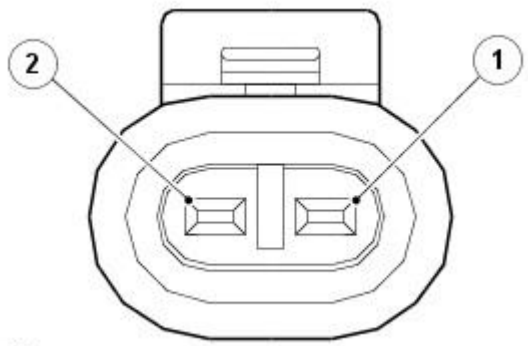

E65719

**Left hand front wheel speed sensor, FH15**

| Circuit | Pin |
|---|---|
| WSS return | 01 |
| WSS signal | 02 |

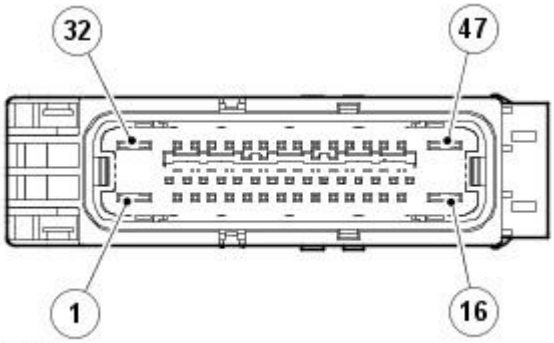

E65715

**ABS module connector, FH103**

| Circuit | Pin |
|---|---|
| Left hand front WSS return | 46 |
| Left hand front WSS signal | 45 |

1 Key off.
2 Disconnect the WSS connector, FH15.
3 Disconnect the ABS module connector, FH103.
4 Key on, engine off.
5 Measure the resistance between:

| FH15, harness side | Battery |
|---|---|
| Pin 01 | Negative terminal |

Is the resistance greater than 100 Kohms?
**Yes**
GO to D2.
**No**
REPAIR the short circuit. For additional information, refer to the wiring diagrams. Clear the DTC, test the system for normal operation by driving the vehicle at more than 20 kph (12.5 mph) for more than 3 minutes.

**D2: CHECK THE WSS RETURN CIRCUIT FOR SHORT CIRCUIT TO POWER**

1 Measure the resistance between:

| FH15, harness side | Battery |
|---|---|
| Pin 01 | Positive terminal |

Is the resistance greater than 100 Kohms?
**Yes**
GO to D3.
**No**
REPAIR the short circuit. For additional information, refer to the wiring diagrams. Clear the DTC, test the system for normal operation by driving the vehicle at more than 20 kph (12.5 mph) for more than 3 minutes.

**D3: CHECK THE WSS RETURN CIRCUIT FOR HIGH RESISTANCE**

1 Measure the resistance between:

| FH15, harness side | FH103, harness side |
|---|---|
| Pin 01 | Pin 46 |

Is the resistance less than 10 ohms?
**Yes**
GO to D4.
**No**
REPAIR the high resistance circuit. For additional information, refer to the wiring diagrams. Clear the DTC, test the system for normal operation by driving the vehicle at more than 20 kph (12.5 mph) for more than 3 minutes.

**D4: CHECK THE WSS SIGNAL CIRCUIT FOR SHORT CIRCUIT TO POWER**

1 Measure the resistance between:

| FH15, harness side | Battery |
|---|---|
| Pin 02 | Positive terminal |

Is the resistance greater than 100 Kohms?
**Yes**
GO to D5.
**No**
REPAIR the short circuit. For additional information, refer to the wiring diagrams. Clear the DTC, test the system for normal operation by driving the vehicle at more than 20 kph (12.5 mph) for more than 3 minutes.

**D5: CHECK THE WSS SIGNAL CIRCUIT FOR SHORT CIRCUIT TO GROUND**

GETtheMANUALS.org

1 Measure the resistance between:

| FH15, harness side | Battery |
|---|---|
| Pin 02 | Negative terminal |

Is the resistance greater than 100 Kohms?

**Yes**

GO to D6.

**No**

REPAIR the short circuit. For additional information, refer to the wiring diagrams. Clear the DTC, test the system for normal operation by driving the vehicle at more than 20 kph (12.5 mph) for more than 3 minutes.

**D6: CHECK THE WSS SIGNAL CIRCUIT FOR HIGH RESISTANCE**

1 Measure the resistance between:

| FH15, harness side | FH103, harness side |
|---|---|
| Pin 02 | Pin 45 |

Is the resistance less than 10 ohms?

**Yes**

GO to D7.

**No**

REPAIR the high resistance circuit. For additional information, refer to the wiring diagrams. Clear the DTC, test the system for normal operation by driving the vehicle at more than 20 kph (12.5 mph) for more than 3 minutes.

**D7: CHECK THE WSS SIGNAL AND RETURN CIRCUITS FOR SHORT CIRCUIT TO EACH OTHER**

1 Measure the resistance between:

| FH15, harness side | FH15, harness side |
|---|---|
| Pin 01 | Pin 02 |

Is the resistance greater than 100 Kohms?

**Yes**

An intermittent fault may be present in the wiring harness. Visually check for chaffed wires or other physical damage to the harness. If no fault is found in the harness, suspect the following components:- WSS connector- WSS- ABS module connector- ABS module

**No**

REPAIR the short circuit. For additional information, refer to the wiring diagrams. Clear the DTC, test the system for normal operation by driving the vehicle at more than 20 kph (12.5 mph) for more than 3 minutes.

## PINPOINT TEST E : RIGHT HAND FRONT WHEEL SPEED SENSOR (WSS)

| TEST CONDITIONS | DETAILS/RESULTS/ACTIONS |
|---|---|

**E1: CHECK THE WSS RETURN CIRCUIT FOR SHORT CIRCUIT TO GROUND**

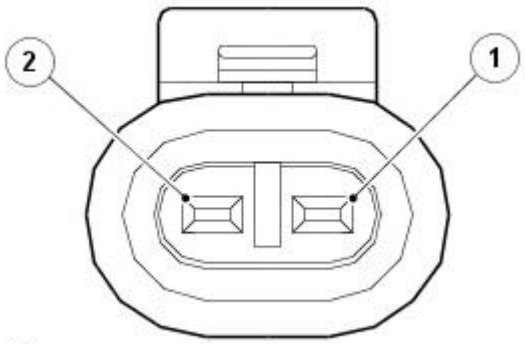


E65719

**Right hand front wheel speed sensor, FH16**

| Circuit | Pin |
|---|---|
| WSS return | 01 |
| WSS signal | 02 |

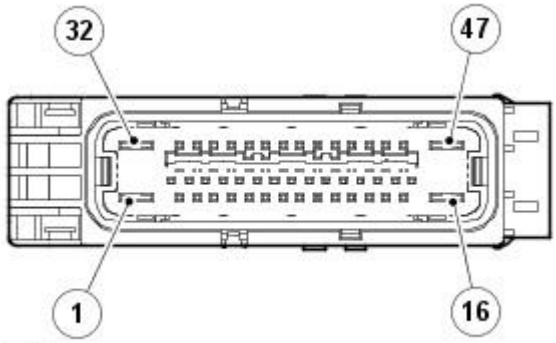


E65715

**ABS module connector, FH103**

| Circuit | Pin |
|---|---|
| Right hand front WSS return | 33 |
| Right hand front WSS signal | 34 |

1 Key off.

2 Disconnect the WSS connector, FH16.

3 Disconnect the ABS module connector, FH103.

4 Key on, engine off.

5 Measure the resistance between:

| FH16, harness side | Battery |
|---|---|
| Pin 01 | Negative terminal |

Is the resistance greater than 100 Kohms?

**Yes**

GO to E2.

**No**

REPAIR the short circuit. For additional information, refer to the wiring diagrams. Clear the DTC, test the system for normal operation by driving the vehicle at more than 20 kph (12.5 mph) for more than 3 minutes.

GETtheMANUALS.org

**E2: CHECK THE WSS RETURN CIRCUIT FOR SHORT CIRCUIT TO POWER**

1 Measure the resistance between:

| FH16, harness side | Battery |
|---|---|
| Pin 01 | Positive terminal |

Is the resistance greater than 100 Kohms?

**Yes**

GO to E3.

**No**

REPAIR the short circuit. For additional information, refer to the wiring diagrams. Clear the DTC, test the system for normal operation by driving the vehicle at more than 20 kph (12.5 mph) for more than 3 minutes.

**E3: CHECK THE WSS RETURN CIRCUIT FOR HIGH RESISTANCE**

1 Measure the resistance between:

| FH16, harness side | FH103, harness side |
|---|---|
| Pin 01 | Pin 33 |

Is the resistance less than 10 ohms?

**Yes**

GO to E4.

**No**

REPAIR the high resistance circuit. For additional information, refer to the wiring diagrams. Clear the DTC, test the system for normal operation by driving the vehicle at more than 20 kph (12.5 mph) for more than 3 minutes.

**E4: CHECK THE WSS SIGNAL CIRCUIT FOR SHORT CIRCUIT TO POWER**

1 Measure the resistance between:

| FH16, harness side | Battery |
|---|---|
| Pin 02 | Positive terminal |

Is the resistance greater than 100 Kohms?

**Yes**

GO to E5.

**No**

REPAIR the short circuit. For additional information, refer to the wiring diagrams. Clear the DTC, test the system for normal operation by driving the vehicle at more than 20 kph (12.5 mph) for more than 3 minutes.

**E5: CHECK THE WSS SIGNAL CIRCUIT FOR SHORT CIRCUIT TO GROUND**

1 Measure the resistance between:

| FH16, harness side | Battery |
|---|---|
| Pin 02 | Negative terminal |

Is the resistance greater than 100 Kohms?

**Yes**

GO to E6.

**No**

REPAIR the short circuit. For additional information, refer to the wiring diagrams. Clear the DTC, test the system for normal operation by driving the vehicle at more than 20 kph (12.5 mph) for more than 3 minutes.

**E6: CHECK THE WSS SIGNAL CIRCUIT FOR HIGH RESISTANCE**

1 Measure the resistance between:

| FH16, harness side | FH103, harness side |
|---|---|
| Pin 02 | Pin 34 |

Is the resistance less than 10 ohms?

**Yes**

GO to E7.

**No**

REPAIR the high resistance circuit. For additional information, refer to the wiring diagrams. Clear the DTC, test the system for normal operation by driving the vehicle at more than 20 kph (12.5 mph) for more than 3 minutes.

**E7: CHECK THE WSS SIGNAL AND RETURN CIRCUITS FOR SHORT CIRCUIT TO EACH OTHER**

1 Measure the resistance between:

| FH16, harness side | FH16, harness side |
|---|---|
| Pin 01 | Pin 02 |

Is the resistance greater than 100 Kohms?

**Yes**

An intermittent fault may be present in the wiring harness. Visually check for chaffed wires or other physical damage to the harness. If no fault is found in the harness, suspect the following components:- WSS connector- WSS- ABS module connector- ABS module

**No**

REPAIR the short circuit. For additional information, refer to the wiring diagrams. Clear the DTC, test the system for normal operation by driving the vehicle at more than 20 kph (12.5 mph) for more than 3 minutes.

## PINPOINT TEST F : LEFT HAND REAR WHEEL SPEED SENSOR (WSS)

| TEST CONDITIONS | DETAILS/RESULTS/ACTIONS |
|---|---|

**F1: CHECK THE WSS RETURN CIRCUIT FOR SHORT CIRCUIT TO GROUND**

GETtheMANUALS.org

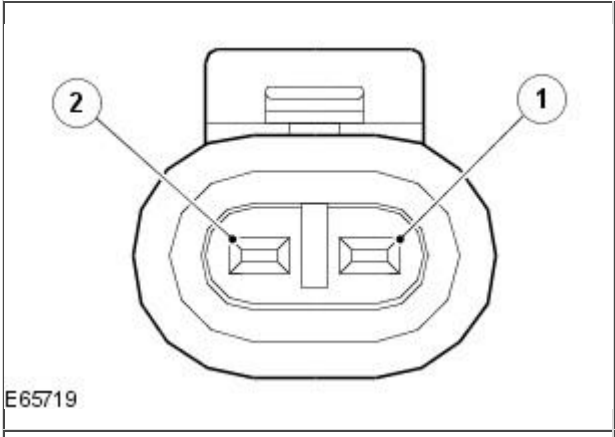


**Left hand rear wheel speed sensor, RL01**

| Circuit | Pin |
|---|---|
| WSS return | 01 |
| WSS signal | 02 |

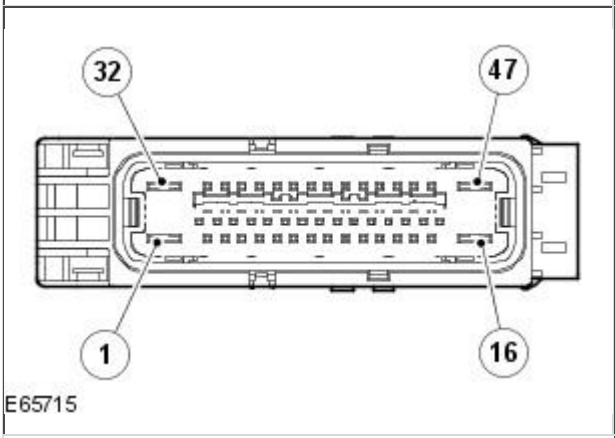


**ABS module connector, FH103**

| Circuit | Pin |
|---|---|
| Left hand rear WSS return | 37 |
| Left hand rear WSS signal | 36 |

1 Key off.
2 Disconnect the WSS connector, RL01.
3 Disconnect the ABS module connector, FH103.
4 Key on, engine off.
5 Measure the resistance between:

| RL01, harness side | Battery |
|---|---|
| Pin 01 | Negative terminal |

Is the resistance greater than 100 Kohms?

**Yes**

GO to F2.

**No**

REPAIR the short circuit. For additional information, refer to the wiring diagrams. Clear the DTC, test the system for normal operation by driving the vehicle at more than 20 kph (12.5 mph) for more than 3 minutes.

**F2: CHECK THE WSS RETURN CIRCUIT FOR SHORT CIRCUIT TO POWER**

1 Measure the resistance between:

| RL01, harness side | Battery |
|---|---|
| Pin 01 | Positive terminal |

Is the resistance greater than 100 Kohms?

**Yes**

GO to F3.

**No**

REPAIR the short circuit. For additional information, refer to the wiring diagrams. Clear the DTC, test the system for normal operation by driving the vehicle at more than 20 kph (12.5 mph) for more than 3 minutes.

**F3: CHECK THE WSS RETURN CIRCUIT FOR HIGH RESISTANCE**

1 Measure the resistance between:

| RL01, harness side | FH103, harness side |
|---|---|
| Pin 01 | Pin 37 |

Is the resistance less than 10 ohms?

**Yes**

GO to F4.

**No**

REPAIR the high resistance circuit. For additional information, refer to the wiring diagrams. Clear the DTC, test the system for normal operation by driving the vehicle at more than 20 kph (12.5 mph) for more than 3 minutes.

**F4: CHECK THE WSS SIGNAL CIRCUIT FOR SHORT CIRCUIT TO POWER**

1 Measure the resistance between:

| RL01, harness side | Battery |
|---|---|
| Pin 02 | Positive terminal |

Is the resistance greater than 100 Kohms?

**Yes**

GO to F5.

**No**

REPAIR the short circuit. For additional information, refer to the wiring diagrams. Clear the DTC, test the system for normal operation by driving the vehicle at more than 20 kph (12.5 mph) for more than 3 minutes.

**F5: CHECK THE WSS SIGNAL CIRCUIT FOR SHORT CIRCUIT TO GROUND**

1 Measure the resistance between:

| RL01, harness side | Battery |
|---|---|
| Pin 02 | Negative terminal |

GETtheMANUALS.org

Is the resistance greater than 100 Kohms?

**Yes**

GO to F6.

**No**

REPAIR the short circuit. For additional information, refer to the wiring diagrams. Clear the DTC, test the system for normal operation by driving the vehicle at more than 20 kph (12.5 mph) for more than 3 minutes.

**F6: CHECK THE WSS SIGNAL CIRCUIT FOR HIGH RESISTANCE**

1 Measure the resistance between:

| RL01, harness side | FH103, harness side |
|---|---|
| Pin 02 | Pin 36 |

Is the resistance less than 10 ohms?

**Yes**

GO to F7.

**No**

REPAIR the high resistance circuit. For additional information, refer to the wiring diagrams. Clear the DTC, test the system for normal operation by driving the vehicle at more than 20 kph (12.5 mph) for more than 3 minutes.

**F7: CHECK THE WSS SIGNAL AND RETURN CIRCUITS FOR SHORT CIRCUIT TO EACH OTHER**

1 Measure the resistance between:

| RL01, harness side | RL01, harness side |
|---|---|
| Pin 01 | Pin 02 |

Is the resistance greater than 100 Kohms?

**Yes**

An intermittent fault may be present in the wiring harness. Visually check for chaffed wires or other physical damage to the harness. If no fault is found in the harness, suspect the following components:- WSS connector- WSS- ABS module connector- ABS module

**No**

REPAIR the short circuit. For additional information, refer to the wiring diagrams. Clear the DTC, test the system for normal operation by driving the vehicle at more than 20 kph (12.5 mph) for more than 3 minutes.

## PINPOINT TEST G : RIGHT HAND REAR WHEEL SPEED SENSOR (WSS)

| TEST CONDITIONS | DETAILS/RESULTS/ACTIONS |
|---|---|

**G1: CHECK THE WSS RETURN CIRCUIT FOR SHORT CIRCUIT TO GROUND**

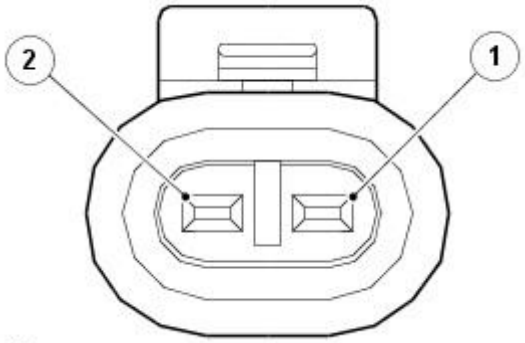


E65719

**Right hand rear wheel speed sensor, RR01**

| Circuit | Pin |
|---|---|
| WSS return | 01 |
| WSS signal | 02 |

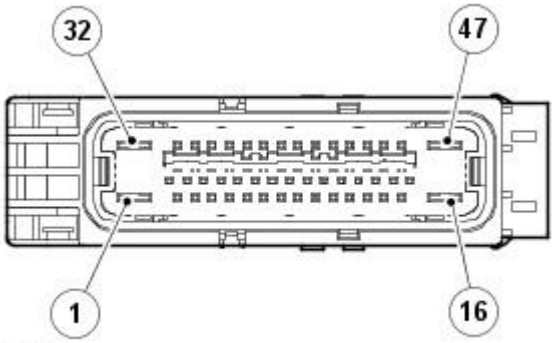


E65715

**ABS module connector, FH103**

| Circuit | Pin |
|---|---|
| Right hand rear WSS return | 42 |
| Right hand rear WSS signal | 43 |

1 Key off.

2 Disconnect the WSS connector, RR01.

3 Disconnect the ABS module connector, FH103.

4 Key on engine off.

5 Measure the resistance between:

| RR01, harness side | Battery |
|---|---|
| Pin 01 | Negative terminal |

Is the resistance greater than 100 Kohms?

**Yes**

GO to G2.

**No**

REPAIR the short circuit. For additional information, refer to the wiring diagrams. Clear the DTC, test the system for normal operation by driving the vehicle at more than 20 kph (12.5 mph) for more than 3 minutes.

**G2: CHECK THE WSS RETURN CIRCUIT FOR SHORT CIRCUIT TO POWER**

GETtheMANUALS.org

| | |
|---|---|
| | 1 Measure the resistance between:<br>**RR01, harness side** / **Battery**<br>Pin 01 / Positive terminal |
| | Is the resistance greater than 100 Kohms?<br>**Yes**<br>GO to G3.<br>**No**<br>REPAIR the short circuit. For additional information, refer to the wiring diagrams. Clear the DTC, test the system for normal operation by driving the vehicle at more than 20 kph (12.5 mph) for more than 3 minutes. |
| **G3: CHECK THE WSS RETURN CIRCUIT FOR HIGH RESISTANCE** | |
| | 1 Measure the resistance between:<br>**RR01, harness side** / **FH103, harness side**<br>Pin 01 / Pin 42 |
| | Is the resistance less than 10 ohms?<br>**Yes**<br>GO to G4.<br>**No**<br>REPAIR the high resistance circuit. For additional information, refer to the wiring diagrams. Clear the DTC, test the system for normal operation by driving the vehicle at more than 20 kph (12.5 mph) for more than 3 minutes. |
| **G4: CHECK THE WSS SIGNAL CIRCUIT FOR SHORT CIRCUIT TO POWER** | |
| | 1 Measure the resistance between:<br>**RR01, harness side** / **Battery**<br>Pin 02 / Positive terminal |
| | Is the resistance greater than 100 Kohms?<br>**Yes**<br>GO to G5.<br>**No**<br>REPAIR the short circuit. For additional information, refer to the wiring diagrams. Clear the DTC, test the system for normal operation by driving the vehicle at more than 20 kph (12.5 mph) for more than 3 minutes. |
| **G5: CHECK THE WSS SIGNAL CIRCUIT FOR SHORT CIRCUIT TO GROUND** | |
| | 1 Measure the resistance between:<br>**RR01, harness side** / **Battery**<br>Pin 02 / Negative terminal |
| | Is the resistance greater than 100 Kohms?<br>**Yes**<br>GO to G6.<br>**No**<br>REPAIR the short circuit. For additional information, refer to the wiring diagrams. Clear the DTC, test the system for normal operation by driving the vehicle at more than 20 kph (12.5 mph) for more than 3 minutes. |
| **G6: CHECK THE WSS SIGNAL CIRCUIT FOR HIGH RESISTANCE** | |
| | 1 Measure the resistance between:<br>**RR01, harness side** / **FH103, harness side**<br>Pin 02 / Pin 43 |
| | Is the resistance less than 10 ohms?<br>**Yes**<br>GO to G7.<br>**No**<br>REPAIR the high resistance circuit. For additional information, refer to the wiring diagrams. Clear the DTC, test the system for normal operation by driving the vehicle at more than 20 kph (12.5 mph) for more than 3 minutes. |
| **G7: CHECK THE WSS SIGNAL AND RETURN CIRCUITS FOR SHORT CIRCUIT TO EACH OTHER** | |
| | 1 Measure the resistance between:<br>**RR01, harness side** / **RR01, harness side**<br>Pin 01 / Pin 02 |
| | Is the resistance greater than 100 Kohms?<br>**Yes**<br>An intermittent fault may be present in the wiring harness. Visually check for chaffed wires or other physical damage to the harness. If no fault is found in the harness, suspect the following components:- WSS connector- WSS- ABS module connector- ABS module<br>**No**<br>REPAIR the short circuit. For additional information, refer to the wiring diagrams. Clear the DTC, test the system for normal operation by driving the vehicle at more than 20 kph (12.5 mph) for more than 3 minutes. |

| **PINPOINT TEST H : BOOSTER PRESSURE SENSOR** | |
|---|---|
| **TEST CONDITIONS** | **DETAILS/RESULTS/ACTIONS** |
| **H1: CHECK THE POWER SUPPLY TO THE BOOSTER PRESSURE SENSOR** | |

GETtheMANUALS.org

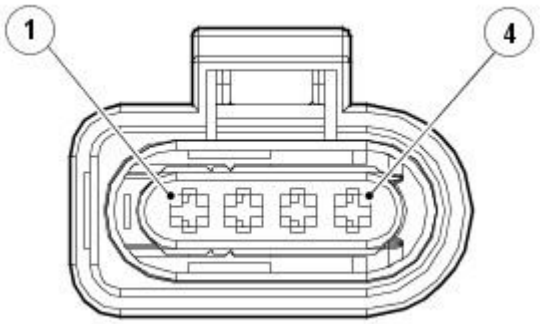

E65716

**Booster pressure sensor, FH130**

| Circuit | Pin |
|---|---|
| Power supply | 03 |
| Signal A | 04 |
| Signal B | 01 |
| Ground | 02 |

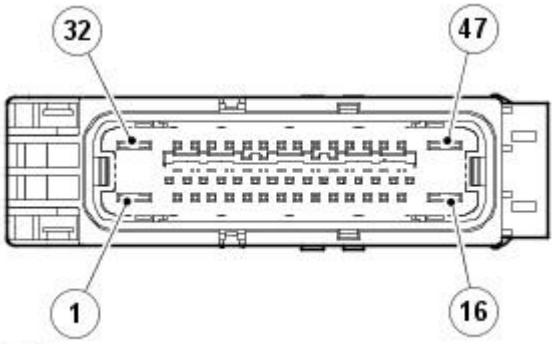

E65715

**ABS module, FH103**

| Circuit | Pin |
|---|---|
| Power supply | 26 |
| Signal A | 38 |
| Signal B | 30 |
| Ground | 27 |

1 Key off.
2 Disconnect the booster pressure sensor connector, FH130.
3 Key on, engine off.
4 Measure the voltage between:

| FH130, harness side | Battery |
|---|---|
| Pin 03 | Negative terminal |

Is the voltage greater than 4 volts?
**Yes**
GO to H4.
**No**
GO to H2.

**H2: CHECK THE BOOSTER PRESSURE SENSOR POWER SUPPLY CIRCUIT FOR SHORT CIRCUIT TO GROUND**

1 Measure the resistance between:

| FH130, harness side | Battery |
|---|---|
| Pin 03 | Negative terminal |

Is the resistance greater than 10 Kohms?
**Yes**
GO to H3.
**No**
REPAIR the short circuit. For additional information, refer to the wiring diagrams. Clear the DTC, test the system for normal operation by applying and releasing the brake pedal firmly three times with the engine running.

**H3: CHECK THE BOOSTER PRESSURE SENSOR POWER SUPPLY CIRCUIT FOR HIGH RESISTANCE**

1 Key off.
2 Disconnect the ABS module connector, FH103.
3 Measure the resistance between:

| FH130, harness side | FH103, harness side |
|---|---|
| Pin 03 | Pin 26 |

Is the resistance less than 10 ohms?
**Yes**
An intermittent fault may be present in the wiring harness. Visually check for chaffed wires or other physical damage to the harness.
**No**
REPAIR the high resistance circuit. For additional information, refer to the wiring diagrams. Clear the DTC, test the system for normal operation by applying and releasing the brake pedal firmly three times with the engine running.

**H4: CHECK THE GROUND CIRCUIT TO THE BOOSTER PRESSURE SENSOR**

1 Measure the resistance between:

| FH130, harness side | Battery |
|---|---|
| Pin 02 | Negative terminal |

Is the resistance less than 10 ohms?
**Yes**
GO to H8.
**No**
GO to H5.

**H5: CHECK THE BOOSTER PRESSURE SENSOR GROUND CIRCUIT FOR SHORT CIRCUIT TO POWER**

1 Measure the resistance between:

| FH130, harness side | Battery |
|---|---|
| Pin 02 | Positive terminal |

GETtheMANUALS.org

Is the resistance greater than 10 Kohms?

**Yes**

GO to H7.

**No**

GO to H6.

**H6: CHECK WHETHER THE SHORT CIRCUIT IS IN THE HARNESS OR THE MODULE**

1. Key off.
2. Disconnect the ABS module connector, FH103.
3. Key on, engine off.
4. Measure the resistance between:

| FH130, harness side | Battery |
|---|---|
| Pin 02 | Positive terminal |

Is the resistance greater than 10 Kohms?

**Yes**

Refer to the warranty policy and procedures manual if a module is suspect.

**No**

REPAIR the short circuit. For additional information, refer to the wiring diagrams. Clear the DTC, test the system for normal operation by applying and releasing the brake pedal firmly three times with the engine running.

**H7: CHECK THE BOOSTER PRESSURE SENSOR GROUND CIRCUIT FOR HIGH RESISTANCE**

1. Key off.
2. Disconnect the ABS module connector, FH103.
3. Key on, engine off.
4. Measure the resistance between:

| FH130, harness side | FH103, harness side |
|---|---|
| Pin 02 | Pin 27 |

Is the resistance less than 10 ohms?

**Yes**

An intermittent fault may be present in the wiring harness. Visually check for chaffed wires or other physical damage to the harness. If no fault is found in the harness, suspect the following components:- Booster pressure sensor connector- ABS module connector- ABS module

**No**

REPAIR the high resistance circuit. For additional information, refer to the wiring diagrams. Clear the DTC, test the system for normal operation by applying and releasing the brake pedal firmly three times with the engine running.

**H8: CHECK THE BOOSTER PRESSURE SENSOR SIGNAL A CIRCUIT FOR SHORT CIRCUIT TO GROUND**

1. Measure the resistance between:

| FH130, harness side | Battery |
|---|---|
| Pin 04 | Negative terminal |

Is the resistance greater than 10 Kohms?

**Yes**

GO to H10.

**No**

GO to H9.

**H9: CHECK WHETHER THE SHORT CIRCUIT IS IN THE HARNESS OR THE MODULE**

1. Key off.
2. Disconnect the ABS module connector, FH103.
3. Key on, engine off.
4. Measure the resistance between:

| FH130, harness side | Battery |
|---|---|
| Pin 04 | Negative terminal |

Is the resistance greater than 10 Kohms?

**Yes**

Refer to the warranty policy and procedures manual if a module is suspect.

**No**

REPAIR the short circuit. For additional information, refer to the wiring diagrams. Clear the DTC, test the system for normal operation by applying and releasing the brake pedal firmly three times with the engine running.

**H10: CHECK THE BOOSTER PRESSURE SENSOR SIGNAL A CIRCUIT FOR SHORT CIRCUIT TO POWER**

1. Measure the resistance between:

| FH130, harness side | Battery |
|---|---|
| Pin 04 | Positive terminal |

Is the resistance greater than 10 Kohms?

**Yes**

GO to H12.

**No**

GO to H11.

**H11: CHECK WHETHER THE SHORT CIRCUIT IS IN THE HARNESS OR THE MODULE**

1. Key off.
2. Disconnect the ABS module connector, FH103.
3. Key on, engine off.
4. Measure the resistance between:

| FH130, harness side | Battery |
|---|---|
| Pin 04 | Positive terminal |

Is the resistance greater than 10 Kohms?

**Yes**

Refer to the warranty policy and procedures manual if a module is suspect.

**No**

REPAIR the short circuit. For additional information, refer to the wiring diagrams. Clear the DTC, test the system for normal operation by applying and releasing the brake pedal firmly three times with the engine running.

**H12: CHECK THE BOOSTER PRESSURE SENSOR SIGNAL B CIRCUIT FOR SHORT CIRCUIT TO GROUND**

GETtheMANUALS.org

| | |
|---|---|
| | 1 Measure the resistance between: |

| FH130, harness side | Battery |
|---|---|
| Pin 01 | Negative terminal |

| | |
|---|---|
| | Is the resistance greater than 10 Kohms?<br>**Yes**<br>GO to H14.<br>**No**<br>GO to H13. |

**H13: CHECK WHETHER THE SHORT CIRCUIT IS IN THE HARNESS OR THE MODULE**

| | |
|---|---|
| | 1 Key off. |
| | 2 Disconnect the ABS module connector, FH103. |
| | 3 Key on, engine off. |
| | 4 Measure the resistance between: |

| FH130, harness side | Battery |
|---|---|
| Pin 01 | Negative terminal |

| | |
|---|---|
| | Is the resistance greater than 10 Kohms?<br>**Yes**<br>Refer to the warranty policy and procedures manual if a module is suspect.<br>**No**<br>REPAIR the short circuit. For additional information, refer to the wiring diagrams. Clear the DTC, test the system for normal operation by applying and releasing the brake pedal firmly three times with the engine running. |

**H14: CHECK THE BOOSTER PRESSURE SENSOR SIGNAL B CIRCUIT FOR SHORT CIRCUIT TO POWER**

| | |
|---|---|
| | 1 Measure the resistance between: |

| FH130, harness side | Battery |
|---|---|
| Pin 01 | Positive terminal |

| | |
|---|---|
| | Is the resistance greater than 10 Kohms?<br>**Yes**<br>GO to H16.<br>**No**<br>GO to H15. |

**H15: CHECK WHETHER THE SHORT CIRCUIT IS IN THE HARNESS OR THE MODULE**

| | |
|---|---|
| | 1 Key off. |
| | 2 Disconnect the ABS module connector, FH103. |
| | 3 Key on, engine off. |
| | 4 Measure the resistance between: |

| FH130, harness side | Battery |
|---|---|
| Pin 01 | Positive terminal |

| | |
|---|---|
| | Is the resistance greater than 10 Kohms?<br>**Yes**<br>Refer to the warranty policy and procedures manual if a module is suspect.<br>**No**<br>REPAIR the short circuit. For additional information, refer to the wiring diagrams. Clear the DTC, test the system for normal operation by applying and releasing the brake pedal firmly three times with the engine running. |

**H16: CHECK THE BOOSTER PRESSURE SENSOR SIGNAL A CIRCUIT FOR HIGH RESISTANCE**

| | |
|---|---|
| | 1 Key off. |
| | 2 Disconnect the ABS module connector, FH103. |
| | 3 Key on, engine off. |
| | 4 Measure the resistance between: |

| FH130, harness side | FH103, harness side |
|---|---|
| Pin 04 | Pin 38 |

| | |
|---|---|
| | Is the resistance less than 10 ohms?<br>**Yes**<br>GO to H17.<br>**No**<br>REPAIR the high resistance circuit. For additional information, refer to the wiring diagrams. Clear the DTC, test the system for normal operation by applying and releasing the brake pedal firmly three times with the engine running. |

**H17: CHECK THE BOOSTER PRESSURE SENSOR SIGNAL B CIRCUIT FOR HIGH RESISTANCE**

| | |
|---|---|
| | 1 Measure the resistance between: |

| FH130, harness side | FH103, harness side |
|---|---|
| Pin 01 | Pin 30 |

| | |
|---|---|
| | Is the resistance less than 10 ohms?<br>**Yes**<br>GO to H18.<br>**No**<br>REPAIR the high resistance circuit. For additional information, refer to the wiring diagrams. Clear the DTC, test the system for normal operation by applying and releasing the brake pedal firmly three times with the engine running. |

**H18: CHECK THE BOOSTER PRESSURE SENSOR SIGNAL A AND B CIRCUITS FOR SHORT CIRCUIT TO EACH OTHER**

| | |
|---|---|
| | 1 Measure the resistance between: |

| FH130, harness side | FH130, harness side |
|---|---|
| Pin 01 | Pin 04 |

| | |
|---|---|
| | Is the resistance greater than 10 Kohms?<br>**Yes**<br>An intermittent fault may be present in the wiring harness. Visually check for chaffed wires or other physical damage to the harness.<br>**No**<br>REPAIR the short circuit. For additional information, refer to the wiring diagrams. Clear the DTC, test the system for normal operation by applying and releasing the brake pedal firmly three times with the engine running. |

**PINPOINT TEST I : STEERING WHEEL ROTATION SENSOR**

GETtheMANUALS.org

| TEST CONDITIONS | DETAILS/RESULTS/ACTIONS |
|---|---|

## I1: CHECK THE POWER SUPPLY TO THE STEERING WHEEL ROTATION SENSOR

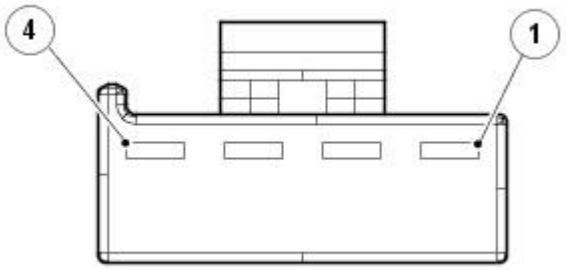

E65720

**Steering wheel rotation sensor, FC110**

| Circuit | Pin |
|---|---|
| Sensor power | 01 |
| Signal B | 02 |
| Signal A | 03 |
| Sensor return | 04 |

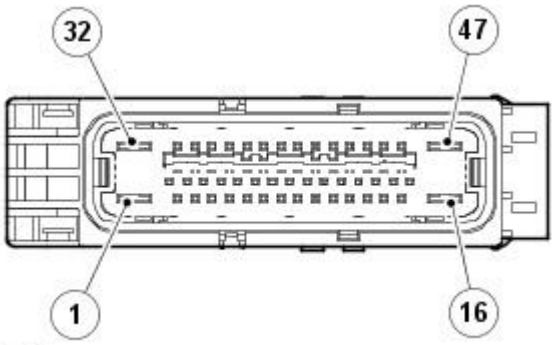

E65715

**ABS module, FH103**

| Circuit | Pin |
|---|---|
| Sensor power | 05 |
| Signal B | 09 |
| Signal A | 41 |
| Sensor return | 40 |

1 Key off.

2 Disconnect the steering wheel rotation sensor connector, FC110.

3 Key on, engine off.

4 Measure the voltage between:

| FC110, harness side | Battery |
|---|---|
| 01 | Negative terminal |

Is the voltage greater than 4 volts?

**Yes**

GO to I4.

**No**

GO to I2.

## I2: CHECK THE STEERING WHEEL ROTATION SENSOR POWER SUPPLY CIRCUIT FOR SHORT CIRCUIT TO GROUND

1 Measure the resistance between:

| FC110, harness side | Battery |
|---|---|
| 01 | Positive terminal |

Is the resistance greater than 10 Kohms?

**Yes**

GO to I3.

**No**

REPAIR the short circuit. For additional information, refer to the wiring diagrams. Clear the DTC, test the system for normal operation by turning the steering from the center position to full right hand lock, to full left hand lock and back to the center position before road testing the vehicle on roads requiring steering input.

## I3: CHECK THE STEERING WHEEL ROTATION SENSOR POWER SUPPLY CIRCUIT FOR HIGH RESISTANCE

1 Key off.

2 Disconnect the ABS module connector, FH103.

3 Measure the resistance between:

| FH110, harness side | FH103, harness side |
|---|---|
| Pin 01 | Pin 05 |

Is the resistance less than 10 ohms?

**Yes**

An intermittent fault may be present in the wiring harness. Visually check for chaffed wires or other physical damage to the harness.

**No**

REPAIR the high resistance circuit. For additional information, refer to the wiring diagrams. Clear the DTC, test the system for normal operation by turning the steering from the center position to full right hand lock, to full left hand lock and back to the center position before road testing the vehicle on roads requiring steering input.

## I4: CHECK THE GROUND CIRCUIT TO THE STEERING WHEEL ROTATION SENSOR

1 Measure the resistance between:

| FH110, harness side | Battery |
|---|---|
| Pin 04 | Negative terminal |

Is the resistance less than 10 ohms?

**Yes**

GO to I8.

**No**

GO to I5.

## I5: CHECK THE STEERING WHEEL ROTATION SENSOR GROUND CIRCUIT FOR SHORT CIRCUIT TO POWER

GETtheMANUALS.org

1 Measure the resistance between:

| FH110, harness side | Battery |
|---|---|
| Pin 04 | Positive terminal |

Is the resistance greater than 10 Kohms?

**Yes**

GO to I7.

**No**

GO to I6.

**I6: CHECK WHETHER THE SHORT CIRCUIT IS IN THE HARNESS OR THE MODULE**

1 Key off.

2 Disconnect the ABS module connector, FH103.

3 Key on, engine off.

4 Measure the resistance between:

| FH110, harness side | Battery |
|---|---|
| Pin 04 | Positive terminal |

Is the resistance greater than 10 Kohms?

**Yes**

Refer to the warranty policy and procedures manual if a module is suspect.

**No**

REPAIR the short circuit. For additional information, refer to the wiring diagrams. Clear the DTC, test the system for normal operation by turning the steering from the center position to full right hand lock, to full left hand lock and back to the center position before road testing the vehicle on roads requiring steering input.

**I7: CHECK THE STEERING WHEEL ROTATION SENSOR GROUND CIRCUIT FOR HIGH RESISTANCE**

1 Key off.

2 Disconnect the ABS module connector, FH103.

3 Measure the resistance between:

| FH110, harness side | FH103, harness side |
|---|---|
| Pin 04 | Pin 40 |

Is the resistance less than 10 ohms?

**Yes**

An intermittent fault may be present in the wiring harness. Visually check for chaffed wires or other physical damage to the harness.

**No**

REPAIR the high resistance circuit. For additional information, refer to the wiring diagrams. Clear the DTC, test the system for normal operation by turning the steering from the center position to full right hand lock, to full left hand lock and back to the center position before road testing the vehicle on roads requiring steering input.

**I8: CHECK THE STEERING WHEEL ROTATION SENSOR SIGNAL A CIRCUIT FOR SHORT CIRCUIT TO GROUND**

1 Measure the resistance between:

| FH110, harness side | Battery |
|---|---|
| Pin 03 | Negative terminal |

Is the resistance greater than 10 Kohms?

**Yes**

GO to I10.

**No**

GO to I9.

**I9: CHECK WHETHER THE SHORT CIRCUIT IS IN THE HARNESS OR THE MODULE**

1 Key off.

2 Disconnect the ABS module connector, FH103.

3 Key on, engine off.

4 Measure the resistance between:

| FH110, harness side | Battery |
|---|---|
| Pin 03 | Negative terminal |

Is the resistance greater than 10 Kohms?

**Yes**

Refer to the warranty policy and procedures manual if a module is suspect.

**No**

REPAIR the short circuit. For additional information, refer to the wiring diagrams. Clear the DTC, test the system for normal operation by turning the steering from the center position to full right hand lock, to full left hand lock and back to the center position before road testing the vehicle on roads requiring steering input.

**I10: CHECK THE STEERING WHEEL ROTATION SENSOR SIGNAL A CIRCUIT FOR SHORT CIRCUIT TO POWER**

1 Measure the resistance between:

| FH110, harness side | Battery |
|---|---|
| Pin 03 | Positive terminal |

Is the resistance greater than 10 Kohms?

**Yes**

GO to I12.

**No**

GO to I11.

**I11: CHECK WHETHER THE SHORT CIRCUIT IS IN THE HARNESS OR THE MODULE**

1 Key off.

2 Disconnect the ABS module connector, FH103.

3 Key on, engine off.

4 Measure the resistance between:

| FH110, harness side | Battery |
|---|---|
| Pin 03 | Positive terminal |

Is the resistance greater than 10 Kohms?

**Yes**

Refer to the warranty policy and procedures manual if a module is suspect.

**No**

GETtheMANUALS.org

REPAIR the short circuit. For additional information, refer to the wiring diagrams. Clear the DTC, test the system for normal operation by turning the steering from the center position to full right hand lock, to full left hand lock and back to the center position before road testing the vehicle on roads requiring steering input.

**I12: CHECK THE STEERING WHEEL ROTATION SENSOR SIGNAL B CIRCUIT FOR SHORT CIRCUIT TO GROUND**

1. Measure the resistance between:

| FH110, harness side | Battery |
|---|---|
| Pin 02 | Negative terminal |

Is the resistance greater than 10 Kohms?

**Yes**

GO to I14.

**No**

GO to I13.

**I13: CHECK WHETHER THE SHORT CIRCUIT IS IN THE HARNESS OR THE MODULE**

1. Key off.
2. Disconnect the ABS module connector, FH103.
3. Key on, engine off.
4. Measure the resistance between:

| FH110, harness side | Battery |
|---|---|
| Pin 02 | Negative terminal |

Is the resistance greater than 10 Kohms?

**Yes**

Refer to the warranty policy and procedures manual if a module is suspect.

**No**

REPAIR the short circuit. For additional information, refer to the wiring diagrams. Clear the DTC, test the system for normal operation by turning the steering from the center position to full right hand lock, to full left hand lock and back to the center position before road testing the vehicle on roads requiring steering input.

**I14: CHECK THE STEERING WHEEL ROTATION SENSOR SIGNAL B CIRCUIT FOR SHORT CIRCUIT TO POWER**

1. Measure the resistance between:

| FH110, harness side | Battery |
|---|---|
| Pin 02 | Positive terminal |

Is the resistance greater than 10 Kohms?

**Yes**

GO to I16.

**No**

GO to I15.

**I15: CHECK WHETHER THE SHORT CIRCUIT IS IN THE HARNESS OR THE MODULE**

1. Key off.
2. Disconnect the ABS module connector, FH103.
3. Key on, engine off.
4. Measure the resistance between:

| FH110, harness side | Battery |
|---|---|
| Pin 02 | Positive terminal |

Is the resistance greater than 10 Kohms?

**Yes**

Refer to the warranty policy and procedures manual if a module is suspect.

**No**

REPAIR the short circuit. For additional information, refer to the wiring diagrams. Clear the DTC, test the system for normal operation by turning the steering from the center position to full right hand lock, to full left hand lock and back to the center position before road testing the vehicle on roads requiring steering input.

**I16: CHECK THE STEERING WHEEL ROTATION SENSOR SIGNAL A CIRCUIT FOR HIGH RESISTANCE**

1. Key off.
2. Disconnect the ABS module connector, FH103.
3. Key on, engine off.
4. Measure the resistance between:

| FH110, harness side | FH103, harness side |
|---|---|
| Pin 03 | Pin 41 |

Is the resistance less than 10 ohms?

**Yes**

GO to I17.

**No**

REPAIR the high resistance circuit. For additional information, refer to the wiring diagrams. Clear the DTC, test the system for normal operation by turning the steering from the center position to full right hand lock, to full left hand lock and back to the center position before road testing the vehicle on roads requiring steering input.

**I17: CHECK THE STEERING WHEEL ROTATION SENSOR SIGNAL B CIRCUIT FOR HIGH RESISTANCE**

1. Measure the resistance between:

| FH110, harness side | FH103, harness side |
|---|---|
| Pin 02 | Pin 41 |

Is the resistance less than 10 ohms?

**Yes**

GO to I18.

**No**

REPAIR the high resistance circuit. For additional information, refer to the wiring diagrams. Clear the DTC, test the system for normal operation by turning the steering from the center position to full right hand lock, to full left hand lock and back to the center position before road testing the vehicle on roads requiring steering input.

GETtingMADbyG.org

**I18: CHECK THE STEERING WHEEL ROTATION SENSOR SIGNAL A AND B CIRCUITS FOR SHORT CIRCUIT TO EACH OTHER**

| | |
|---|---|
| | 1 Measure the resistance between: |

| FH110, harness side | FH110, harness side |
|---|---|
| Pin 02 | Pin 03 |

Is the resistance greater than 100 Kohms?

**Yes**

An intermittent fault may be present in the wiring harness. Visually check for chaffed wires or other physical damage to the harness.

**No**

REPAIR the short circuit. For additional information, refer to the wiring diagrams. Clear the DTC, test the system for normal operation by turning the steering from the center position to full right hand lock, to full left hand lock and back to the center position before road testing the vehicle on roads requiring steering input.

## PINPOINT TEST J : YAW RATE SENSOR AND ACCELEROMETER

| TEST CONDITIONS | DETAILS/RESULTS/ACTIONS |
|---|---|

### J1: CHECK THE POWER SUPPLY TO THE YAW RATE SENSOR AND ACCELEROMETER

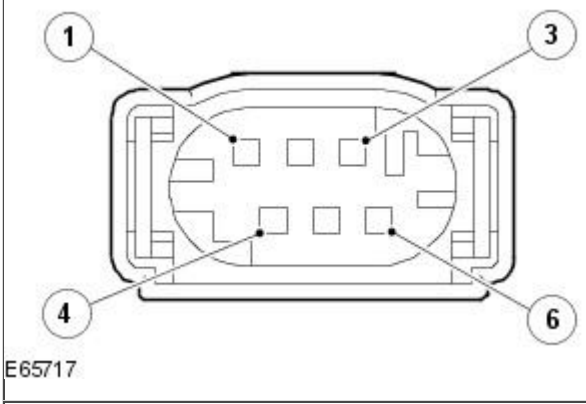


**Yaw rate sensor and accelerometer, CA236**

| Circuit | Pin |
|---|---|
| CAN negative | 01 |
| CAN positive | 02 |
| Sensor power | 03 |
| Sensor ground | 05 |

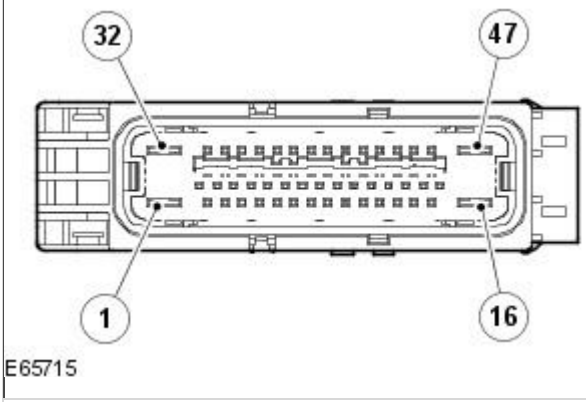


**ABS module, FH103**

| Circuit | Pin |
|---|---|
| CAN negative | 19 |
| CAN positive | 18 |
| Sensor power | 22 |
| Sensor ground | 29 |

1 Key off.

2 Disconnect the yaw rate sensor and accelerometer connector, CA236

3 Key on, engine off.

4 Measure the resistance between:

| CA236, harness side | Battery |
|---|---|
| Pin 03 | Negative terminal |

Is the voltage greater than 4 volts?

**Yes**

GO to J4.

**No**

GO to J2.

### J2: CHECK THE YAW RATE SENSOR AND ACCELEROMETER POWER SUPPLY CIRCUIT FOR SHORT CIRCUIT TO GROUND

1 Measure the resistance between:

| CA236, harness side | Battery |
|---|---|
| Pin 03 | Negative terminal |

Is the resistance greater than 10 Kohms?

**Yes**

GO to J3.

**No**

REPAIR the short circuit. For additional information, refer to the wiring diagrams. Clear the DTC, test the system for normal operation by driving the vehicle to a speed greater than 20 Kph (12.5 mph) for more than 3 seconds.

### J3: CHECK THE YAW RATE SENSOR AND ACCELEROMETER POWER SUPPLY CIRCUIT FOR HIGH RESISTANCE

1 Key off.

2 Disconnect the ABS module connector, FH103.

3 Measure the resistance between:

| CA236, harness side | FH103, harness side |
|---|---|
| Pin 03 | Pin 22 |

Is the resistance less than 10 ohms?

**Yes**

An intermittent fault may be present in the wiring harness. Visually check for chaffed wires or other physical damage to the harness.

**No**

REPAIR the high resistance circuit. For additional information, refer to the wiring diagrams. Clear the DTC, test the system for normal operation by driving the vehicle to a speed greater than 20 Kph (12.5 mph) for more than 3 seconds.

GETtheMANUALS.org

**J4: CHECK THE GROUND CIRCUIT TO THE YAW RATE SENSOR AND ACCELEROMETER**

1. Measure the resistance between:

| CA236, harness side | Battery |
|---|---|
| Pin 05 | Negative terminal |

Is the resistance less than 10 ohms?

**Yes**
GO to J8.

**No**
GO to J5.

**J5: CHECK THE YAW RATE SENSOR AND ACCELEROMETER GROUND CIRCUIT FOR SHORT CIRCUIT TO POWER**

1. Measure the resistance between:

| CA236, harness side | Battery |
|---|---|
| Pin 05 | Positive terminal |

Is the resistance greater than 10 Kohms?

**Yes**
GO to J7.

**No**
GO to J6.

**J6: CHECK WHETHER THE SHORT CIRCUIT IS IN THE HARNESS OR THE MODULE**

1. Key off.
2. Disconnect the ABS module connector, FH103.
3. Key on, engine off.
4. Measure the resistance between:

| CA236, harness side | Battery |
|---|---|
| Pin 05 | Positive terminal |

Is the resistance greater than 10 Kohms?

**Yes**
Refer to the warranty policy and procedures manual if a module is suspect.

**No**
REPAIR the short circuit. For additional information, refer to the wiring diagrams. Clear the DTC, test the system for normal operation by driving the vehicle to a speed greater than 20 Kph (12.5 mph) for more than 3 seconds.

**J7: CHECK THE YAW RATE SENSOR AND ACCELEROMETER GROUND CIRCUIT FOR HIGH RESISTANCE**

1. Key off.
2. Disconnect the ABS module connector, FH103.
3. Key on, engine off.
4. Measure the resistance between:

| CA236, harness side | FH103, harness side |
|---|---|
| Pin 05 | Pin 29 |

Is the resistance less than 10 ohms?

**Yes**
An intermittent fault may be present in the wiring harness. Visually check for chaffed wires or other physical damage to the harness.

**No**
REPAIR the high resistance circuit. For additional information, refer to the wiring diagrams. Clear the DTC, test the system for normal operation by driving the vehicle to a speed greater than 20 Kph (12.5 mph) for more than 3 seconds.

**J8: CHECK THE YAW RATE SENSOR AND ACCELEROMETER CAN - CIRCUIT FOR SHORT CIRCUIT TO GROUND**

1. Measure the resistance between:

| CA236, harness side | Battery |
|---|---|
| Pin 01 | Negative terminal |

Is the resistance greater than 10 Kohms?

**Yes**
GO to J10.

**No**
GO to J9.

**J9: CHECK WHETHER THE SHORT CIRCUIT IS IN THE HARNESS OR THE MODULE**

1. Key off.
2. Disconnect the ABS module connector, FH103.
3. Key on, engine off.
4. Measure the resistance between:

| CA236, harness side | Battery |
|---|---|
| Pin 01 | Negative terminal |

Is the resistance greater than 10 Kohms?

**Yes**
Refer to the warranty policy and procedures manual if a module is suspect.

**No**
REPAIR the short circuit. For additional information, refer to the wiring diagrams. Clear the DTC, test the system for normal operation by driving the vehicle to a speed greater than 20 Kph (12.5 mph) for more than 3 seconds.

**J10: CHECK THE YAW RATE SENSOR AND ACCELEROMETER CAN - CIRCUIT FOR SHORT CIRCUIT TO POWER**

1. Measure the resistance between:

| CA236, harness side | Battery |
|---|---|
| Pin 01 | Positive terminal |

Is the resistance greater than 10 Kohms?

**Yes**
GO to J12.

**No**
GO to J11.

**J11: CHECK WHETHER THE SHORT CIRCUIT IS IN THE HARNESS OR THE MODULE**

1. Key off.
2. Disconnect the ABS module connector, FH103.
3. Key on, engine off.

GETtheMANUALS.org

4 Measure the resistance between:

| CA236, harness side | Battery |
|---|---|
| Pin 01 | Positive terminal |

Is the resistance greater than 10 Kohms?

**Yes**

Refer to the warranty policy and procedures manual if a module is suspect.

**No**

REPAIR the short circuit. For additional information, refer to the wiring diagrams. Clear the DTC, test the system for normal operation by driving the vehicle to a speed greater than 20 Kph (12.5 mph) for more than 3 seconds.

**J12: CHECK THE YAW RATE SENSOR AND ACCELEROMETER CAN + CIRCUIT FOR SHORT CIRCUIT TO GROUND**

1 Measure the resistance between:

| CA236, harness side | Battery |
|---|---|
| Pin 02 | Negative terminal |

Is the resistance greater than 10 Kohms?

**Yes**

GO to J14.

**No**

GO to J13.

**J13: CHECK WHETHER THE SHORT CIRCUIT IS IN THE HARNESS OR THE MODULE**

1 Key off.

2 Disconnect the ABS module connector, FH103.

3 Key on, engine off.

4 Measure the resistance between:

| CA236, harness side | Battery |
|---|---|
| Pin 02 | Negative terminal |

Is the resistance greater than 10 Kohms?

**Yes**

Refer to the warranty policy and procedures manual if a module is suspect.

**No**

REPAIR the short circuit. For additional information, refer to the wiring diagrams. Clear the DTC, test the system for normal operation by driving the vehicle to a speed greater than 20 Kph (12.5 mph) for more than 3 seconds.

**J14: CHECK THE YAW RATE SENSOR AND ACCELEROMETER CAN + CIRCUIT FOR SHORT CIRCUIT TO POWER**

1 Measure the resistance between:

| CA236, harness side | Battery |
|---|---|
| Pin 02 | Positive terminal |

Is the resistance greater than 10 Kohms?

**Yes**

GO to J16.

**No**

GO to J15.

**J15: CHECK WHETHER THE SHORT CIRCUIT IS IN THE HARNESS OR THE MODULE**

1 Key off.

2 Disconnect the ABS module connector, FH103.

3 Key on, engine off.

4 Measure the resistance between:

| CA236, harness side | Battery |
|---|---|
| Pin 02 | Positive terminal |

Is the resistance greater than 10 Kohms?

**Yes**

Refer to the warranty policy and procedures manual if a module is suspect.

**No**

REPAIR the short circuit. For additional information, refer to the wiring diagrams. Clear the DTC, test the system for normal operation by driving the vehicle to a speed greater than 20 Kph (12.5 mph) for more than 3 seconds.

**J16: CHECK THE YAW RATE SENSOR AND ACCELEROMETER CAN - CIRCUIT FOR HIGH RESISTANCE**

1 Key off.

2 Disconnect the ABS module connector, FH103.

3 Key on, engine off.

4 Measure the resistance between:

| CA236, harness side | FH103, harness side |
|---|---|
| Pin 01 | Pin 19 |

Is the resistance less than 10 ohms?

**Yes**

GO to J17.

**No**

REPAIR the high resistance circuit. For additional information, refer to the wiring diagrams. Clear the DTC, test the system for normal operation by driving the vehicle to a speed greater than 20 Kph (12.5 mph) for more than 3 seconds.

**J17: CHECK THE YAW RATE SENSOR AND ACCELEROMETER CAN + CIRCUIT FOR HIGH RESISTANCE**

1 Measure the resistance between:

| CA236, harness side | FH103, harness side |
|---|---|
| Pin 02 | Pin 18 |

Is the resistance less than 10 ohms?

**Yes**

GO to J18.

**No**

REPAIR the high resistance circuit. For additional information, refer to the wiring diagrams. Clear the DTC, test the system for normal operation by driving the vehicle to a speed greater than 20 Kph (12.5 mph) for more than 3 seconds.

**J18: CHECK THE YAW RATE SENSOR AND ACCELEROMETER CAN + AND - CIRCUITS FOR SHORT CIRCUIT TO EACH OTHER**

1 Measure the resistance between:

GETtheMANUALS.org

| CA236, harness side | CA236, harness side |
|---|---|
| Pin 02 | Pin 01 |

| | |
|---|---|
| | Is the resistance greater than 10 Kohms?<br>**Yes**<br>An intermittent fault may be present in the wiring harness. Visually check for chaffed wires or other physical damage to the harness.<br>**No**<br>REPAIR the short circuit. For additional information, refer to the wiring diagrams. Clear the DTC, test the system for normal operation by driving the vehicle to a speed greater than 20 Kph (12.5 mph) for more than 3 seconds. |

## PINPOINT TEST K : TRACTION CONTROL SWITCH

| TEST CONDITIONS | DETAILS/RESULTS/ACTIONS |
|---|---|
| **K1: CHECK THE TRACTION CONTROL SWITCH FUNCTION** | |
| E65718 | **Traction control switch, FC113**<br>**Circuit** / **Pin**<br>Ground / 08<br>Signal / 04 |
| E65718 | **Traction control switch, FC119**<br>**Circuit** / **Pin**<br>Ground / 04 |
| 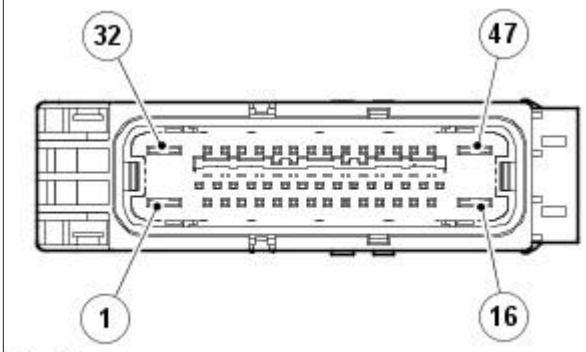 <br>E65715 | **ABS module, FH103**<br>**Circuit** / **Pin**<br>Traction control switch signal / 04 |
| | 1 Key off.<br>2 Disconnect the traction control switch connectors, FC113 and FC119.<br>3 Measure the resistance between:<br>**FC113, component side** / **FC113, component side**<br>Pin 04 / Pin 08<br>4 Operate the switch. |
| | Does the resistance decrease as the switch is operated?<br>**Yes**<br>GO to K2.<br>**No**<br>INSTALL a new traction control switch. Clear the DTC, test the system for normal operation. |
| **K2: CHECK THE TRACTION CONTROL SWITCH SIGNAL** | |
| | 1 Connect a 3 Amp fused jumper lead between:<br>**FC113, harness side** / **FC113, harness side**<br>Pin 04 / Pin 08<br>2 Key on, engine off.<br>3 Using the Jaguar approved diagnostic system or a suitable scan tool, access the traction control status PID.<br>• The format of this may vary from one tool to another. |
| | Is the PID value displayed as **active**?<br>**Yes**<br>An intermittent fault may be present in the wiring harness. Visually check for chaffed wires or other physical damage to the harness.<br>**No**<br>GO to K3. |
| **K3: CHECK THE TRACTION CONTROL SWITCH GROUND CIRCUITS** | |
| | 1 Measure the resistance between:<br>**FC113, harness side** / **Battery**<br>Pin 08 / Negative terminal<br>**FC119, harness side** / **Battery**<br>Pin 04 / Negative terminal |
| | Are both resistances less than 10 ohms?<br>**Yes**<br>GO to K5.<br>**No**<br>GO to K4. |
| **K4: CHECK THE TRACTION CONTROL SWITCH GROUND CIRCUITS FOR SHORT CIRCUIT TO POWER** | |
| | 1 Measure the resistance between:<br>**FC113, harness side** / **Battery**<br>Pin 08 / Positive terminal<br>**FC119, harness side** / **Battery**<br>Pin 04 / Positive terminal |

GETtheMANUALS.org

Are both resistances greater than 10 Kohms?

**Yes**

An intermittent fault may be present in the wiring harness. Visually check for chaffed wires or other physical damage to the harness.

**No**

REPAIR the high resistance circuit. For additional information, refer to the wiring diagrams. Clear the DTC, test the system for normal operation.

**K5: CHECK THE TRACTION CONTROL SWITCH SIGNAL CIRCUIT FOR SHORT CIRCUIT TO POWER**

1 Measure the resistance between:

| FC113, harness side | Battery |
|---|---|
| Pin 04 | Positive terminal |

Is the resistance greater than 10 Kohms?

**Yes**

GO to K7.

**No**

GO to K6.

**K6: CHECK WHETHER THE SHORT CIRCUIT IS IN THE HARNESS OR THE MODULE**

1 Key off.

2 Disconnect the ABS module connector, FH103.

3 Key on, engine off.

4 Measure the resistance between:

| FC113, harness side | Battery |
|---|---|
| Pin 04 | Positive terminal |

Is the resistance greater than 10 Kohms?

**Yes**

Refer to the warranty policy and procedures manual if a module is suspect.

**No**

REPAIR the short circuit. For additional information, refer to the wiring diagrams. Clear the DTC, test the system for normal operation.

**K7: CHECK THE TRACTION CONTROL SWITCH SIGNAL CIRCUIT FOR SHORT CIRCUIT TO GROUND**

1 Measure the resistance between:

| FC113, harness side | Battery |
|---|---|
| Pin 04 | Negative terminal |

Is the resistance greater than 10 Kohms?

**Yes**

GO to K9.

**No**

GO to K8.

**K8: CHECK WHETHER THE SHORT CIRCUIT IS IN THE HARNESS OR THE MODULE**

1 Key off.

2 Disconnect the ABS module connector, FH103.

3 Key on, engine off.

4 Measure the resistance between:

| FC113, harness side | Battery |
|---|---|
| Pin 04 | Negative terminal |

Is the resistance greater than 10 Kohms?

**Yes**

Refer to the warranty policy and procedures manual if a module is suspect.

**No**

REPAIR the short circuit. For additional information, refer to the wiring diagrams. Clear the DTC, test the system for normal operation.

**K9: CHECK THE TRACTION CONTROL SWITCH SIGNAL CIRCUIT FOR HIGH RESISTANCE**

1 Key off.

2 Disconnect the ABS module connector, FH103.

3 Key on, engine off.

4 Measure the resistance between:

| FC113, harness side | FH103, harness side |
|---|---|
| Pin 04 | Pin 04 |

Is the resistance less than 10 ohms?

**Yes**

An intermittent fault may be present in the wiring harness. Visually check for chaffed wires or other physical damage to the harness.

**No**

REPAIR the high resistance circuit. For additional information, refer to the wiring diagrams. Clear the DTC, test the system for normal operation.

GETtheMANUALS.org

# Anti-Lock Control - Stability Assist - Anti-Lock Brake System (ABS) Module

Removal and Installation

## Removal

1. Disconnect the battery ground cable.
   For additional information, refer to Section 414-01 Battery, Mounting and Cables.
2. Disconnect the hydraulic control unit (HCU) electrical connector.

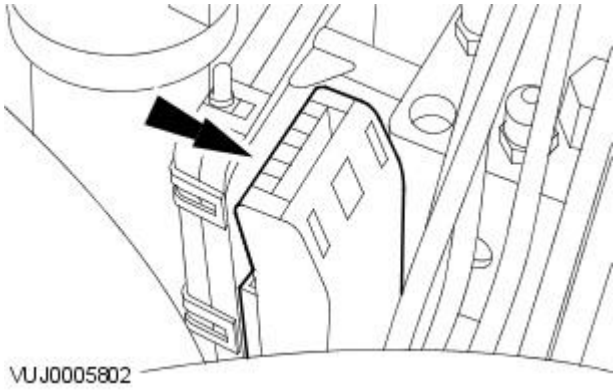


3. Detach the engine compartment battery junction box.

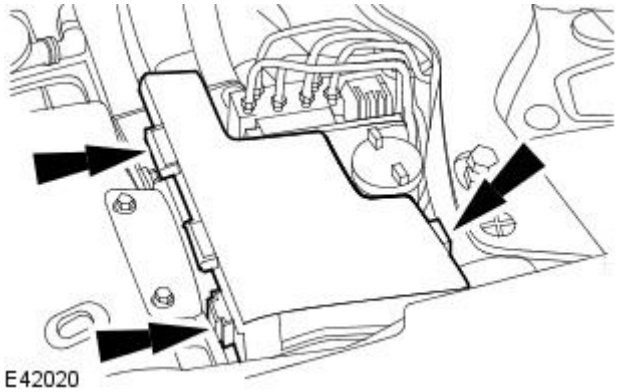


4. Remove the windshield washer reservoir.
   For additional information, refer to Section 501-16 Wipers and Washers.
5. Remove the anti-lock brake system (ABS) module.

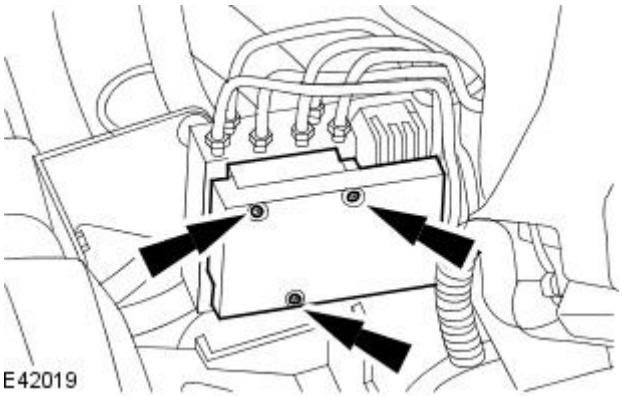


## Installation

1. To install, reverse the removal procedure.

GETtheMANUALS.org

# Anti-Lock Control - Stability Assist - Brake Master Cylinder Pressure Transducer

Removal and Installation

## Removal

All vehicles

WARNING: Brake fluid contains polyglycol ethers and polyglycols. Avoid contact with the eyes. Wash hands thoroughly after handling, as prolonged contact may cause irritation and dermatitis. If brake fluid contacts the eyes, flush the eyes with cold water or eyewash solution and seek medical attention. If taken internally do not induce vomiting, seek immediate medical attention. Failure to follow these instructions may result in personal injury.

1. Disconnect the battery.
   For additional information, refer to: Battery Disconnect and Connect (414-01 Battery, Mounting and Cables, General Procedures).

All except vehicles with diesel engine

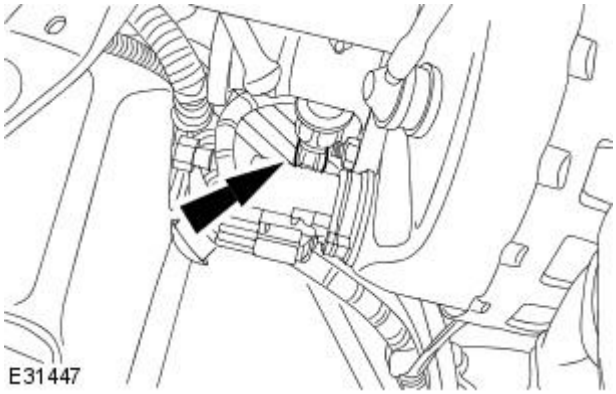


2. Disconnect the brake master cylinder pressure transducer electrical connector.

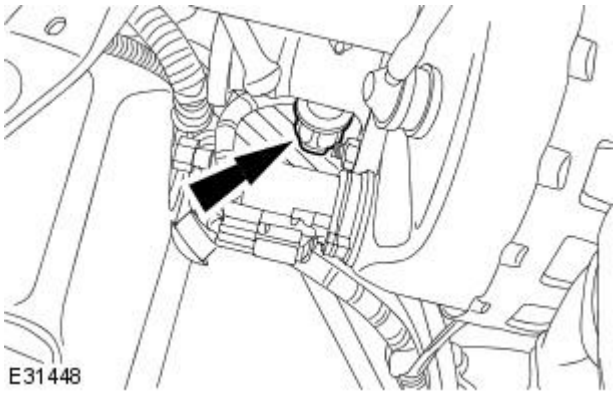


3. CAUTION: If brake fluid is spilt on the paintwork, the effected area must be immediately washed down with cold water.

   Remove the brake master cylinder pressure transducer.

Vehicles with diesel engine

4. Remove the brake master cylinder.
   For additional information, refer to: Brake Master Cylinder - 2.7L V6 - TdV6 (206-06 Hydraulic Brake Actuation, Removal and Installation).

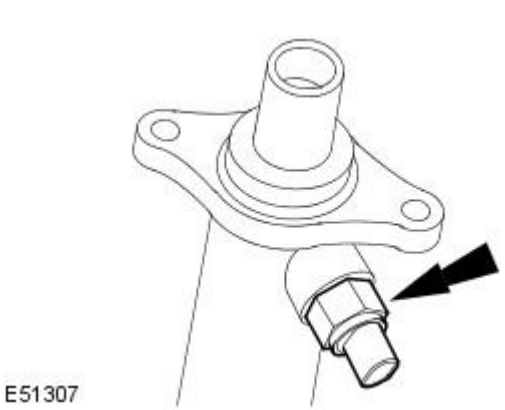


5. CAUTION: If brake fluid is spilt on the paintwork, the effected area must be immediately washed down with cold water.

   Remove the brake master cylinder pressure transducer.

## Installation

All except vehicles with diesel engine

GETtheMANUALS.org

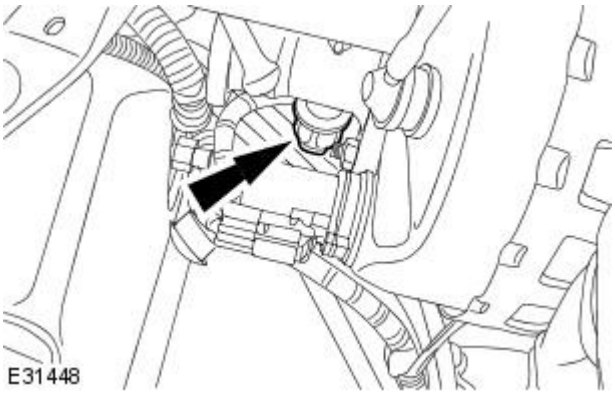


**1.** To install, reverse the removal procedure.

1. Tighten 30 Nm.

Vehicles with diesel engine

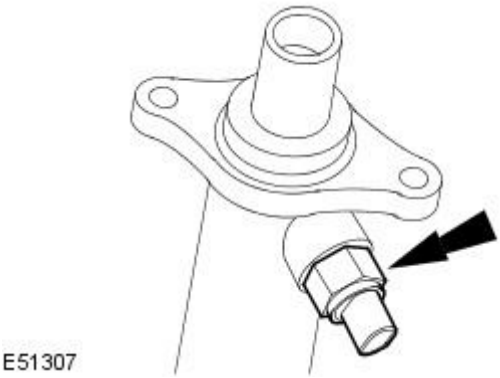


**2.** To install, reverse the removal procedure.

1. Tighten 30 Nm.

GETtheMANUALS.org

# Anti-Lock Control - Stability Assist - Brake Pedal Travel SensorVIN Range: M45255->N52206

Removal and Installation

1. Remove the cowl panel grille.
   For additional information, refer to: Cowl Panel Grille (501-02 Front End Body Panels, Removal and Installation).

## Removal

WARNING: Failure to carry out procedure may result in damage to the vehicle.

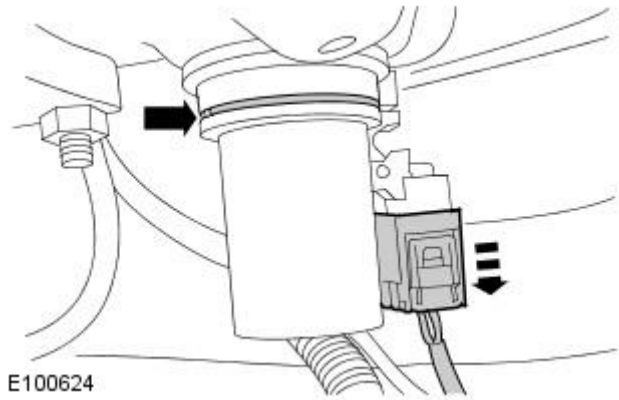


1. Depress brake pedal 20 times to remove vacuum from brake booster.
2. Remove the brake pedal travel sensor.
   - Disconnect the brake pedal travel sensor electrical connector.
   - Using a suitable pick, remove the spring clip.

## Installation

1. Fit new spring clip to sensor housing, ensuring correct alignment.
2. Lubricate new seal with water and fit seal to the sensor.
3. Fit and fully seat new brake pedal travel sensor.
   - Connect the brake pedal travel sensor electrical connector.
4. Install the cowl panel grille.
   For additional information, refer to: Cowl Panel Grille (501-02 Front End Body Panels, Removal and Installation).

GETtheMANUALS.org

# Anti-Lock Control - Stability Assist - Front Wheel Speed Sensor

Removal and Installation

## Removal

**1.** Raise and support the vehicle.
For additional information, refer to Section 100-02 Jacking and Lifting.

**2.** Detach the front wheel speed sensor.

1. Remove the front wheel speed sensor retaining clip.
2. Detach the front wheel speed sensor.

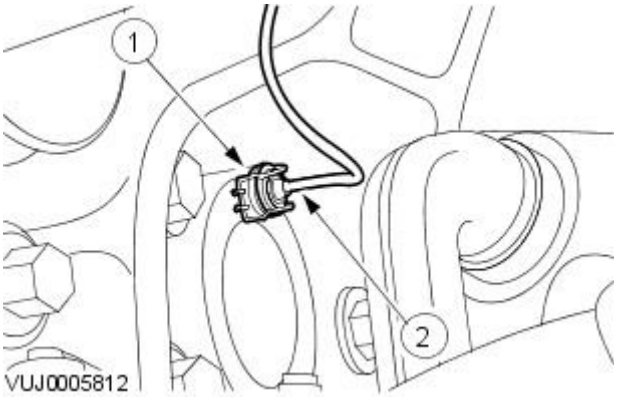


**3.** Detach the front fender splash shield.

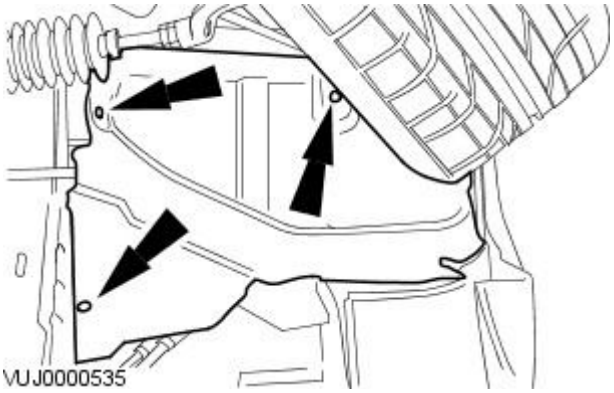


**4.** Detach the front wheel speed sensor.

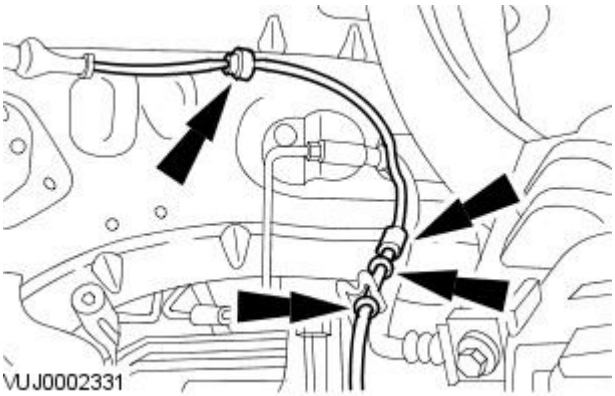


**5.** Remove the front wheel speed sensor.

- Disconnect the electrical connector.

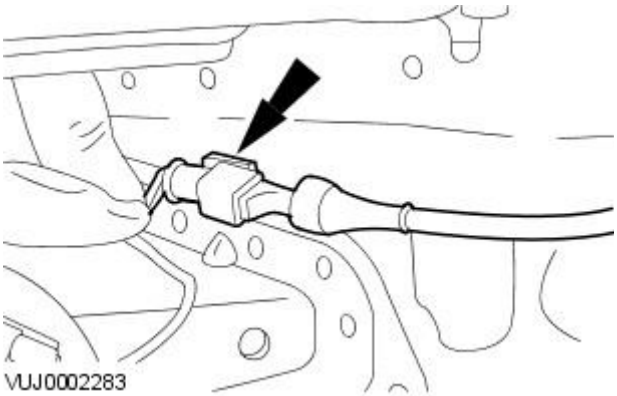


## Installation

**1.** CAUTIONS:

- Make sure the wheel speed sensor locating tang is correctly seated in the hub assembly.

GETtheMANUALS.org

Make sure the front wheel speed sensor harness is correctly routed around the front suspension components.

To install, reverse the removal procedure.

GETtheMANUALS.org

# Anti-Lock Control - Stability Assist - Hydraulic Control Unit (HCU)VIN Range: M45255->N52206

Removal and Installation

| Special Tool(s) | |
|---|---|
| 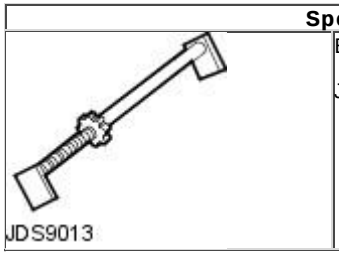 JDS9013 | Brake pedal hold-down tool<br><br>JDS 9013 |

## Removal

**1.** CAUTION: Brake fluid contains polyglycol ethers and polyglycols. Avoid contact with the eyes. Wash hands thoroughly after handling, as prolonged contact may cause irritation and dermatitis. If brake fluid contacts the eyes, flush the eyes with cold water or eyewash solution and seek medical attention. If taken internally do not induce vomiting, seek immediate medical attention. Failure to follow these instructions may result in personal injury.

• NOTE: To prevent the loss of brake fluid, apply the brake pedal hold-down tool and adjust to hold the brake pedal down 40 mm (1.6 in).

Disconnect the battery ground cable.
For additional information, refer to Section 414-01 Battery, Mounting and Cables.

**2.** Raise and support the vehicle.
For additional information, refer to Section 100-02 Jacking and Lifting.

**3.** Connect a bleed pipe and bottle to the bleed nipple and loosen the bleed nipple.

**4.** Install the pedal hold-down tool.

- Install the tool between the pedal and the seat frame.
- Turn the tool hand-wheel to depress and hold the pedal 60 mm (2.4 in) from the 'Off' position
- This will prevent loss of fluid from the reservoir through disconnected brake pipes.

**5.** Remove the bleed pipe and bottle.

- Tighten the caliper bleed nipple.
- Disconnect and remove the bleed pipe and bottle.
- Install the bleed nipple dust cap.

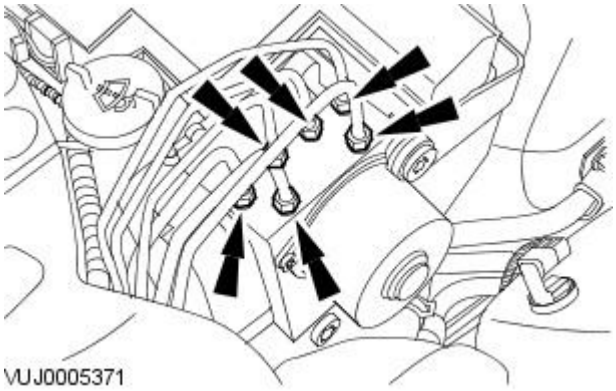


**6.** CAUTION: If brake fluid is spilt on the paintwork, the effected area must be immediately washed down with cold water.

Detach the hydraulic control unit (HCU) brake tubes.

GETtheMANUALS.org

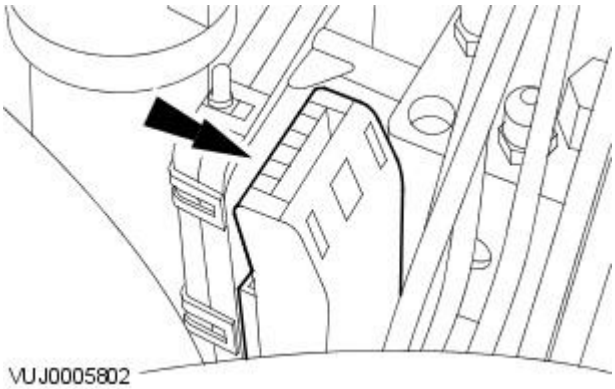


**7.** Disconnect the HCU electrical connector.

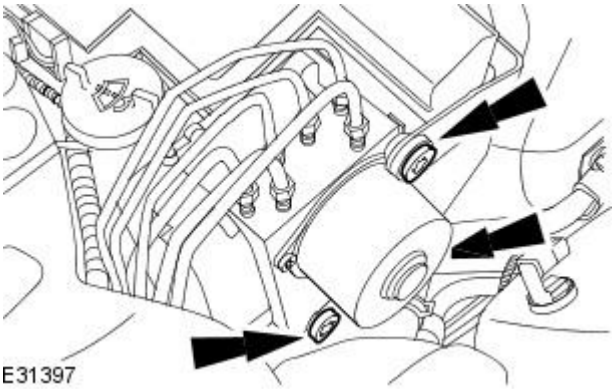


**8.** Remove the HCU.

## Installation

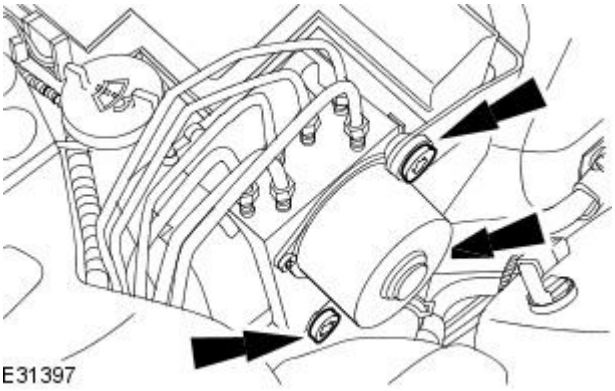


**1.** Install the HCU.

- Tighten to 9 Nm.

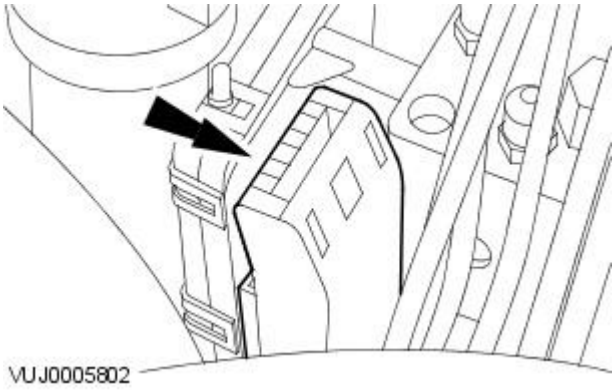


**2.** Connect the HCU electrical connector.

GETtheMANUALS.org

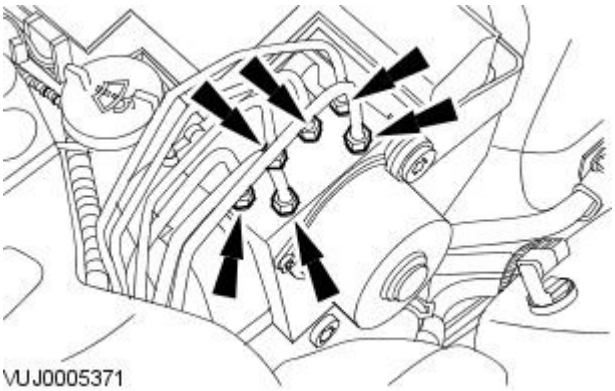


**3.** CAUTION: If brake fluid is spilt on the paintwork, the effected area must be immediately washed down with cold water.

Attach the HCU brake tubes.

- Tighten to 17 Nm.

**4.** Connect the battery ground cable.
For additional information, refer to Section 414-01 Battery, Mounting and Cables.

**5.** Bleed the ABS brake system.
For additional information, refer to Section 206-00 Brake System - General Information.

GETtheMANUALS.org

# Anti-Lock Control - Stability Assist - Hydraulic Control Unit (HCU)VIN Range: N52207->N99999

Removal and Installation

| Special Tool(s) | |
|---|---|
| 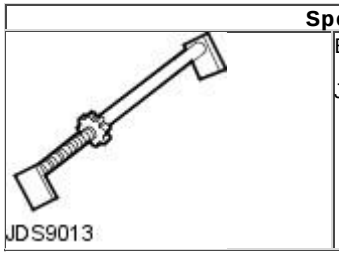  | Brake pedal hold-down tool<br><br>JDS 9013 |

## Removal

All vehicles

**1.** WARNING: Brake fluid contains polyglycol ethers and polyglycols. Avoid contact with the eyes. Wash hands thoroughly after handling, as prolonged contact may cause irritation and dermatitis. If brake fluid contacts the eyes, flush the eyes with cold water or eyewash solution and seek medical attention. If taken internally do not induce vomiting, seek immediate medical attention. Failure to follow these instructions may result in personal injury.

• NOTE: To prevent the loss of brake fluid, apply the brake pedal hold-down tool and adjust to hold the brake pedal down 60 mm (2.4 inch).

Disconnect the battery ground cable.
For additional information, refer to: Battery Disconnect and Connect (414-01 Battery, Mounting and Cables, General Procedures).

**2.** Raise and support the vehicle.
For additional information, refer to: Lifting (100-02 Jacking and Lifting, Description and Operation).

**3.** Connect brake bleed pipes and bottles to the left-hand front and the left-hand rear brake caliper bleed nipples and loosen the brake caliper bleed nipples.

**4.** Install pedal hold-down tool.

- Install the tool between the brake pedal and the seat frame.
- Turn the tool hand-wheel to press and hold the brake pedal 60 mm (2.4 inch) from the 'Off' position
- This will prevent loss of fluid from the reservoir through disconnected brake tubes.

Vehicles with standard brakes

**5.** Remove the bleed pipes and bottles.

- Tighten the left-hand front caliper bleed nipple.
  1. Tighten to 8 Nm.
- Tighten the left-hand rear brake caliper bleed nipple.
  1. Tighten to 14 Nm.
- Disconnect and remove the brake bleed pipes and bottles.
- Install the bleed nipple dust caps.

Vehicles with high performance brakes

**6.** Remove the bleed pipes and bottles.

- Tighten the left-hand front caliper bleed nipple.
  1. Tighten to 14 Nm.
- Tighten the left-hand rear brake caliper bleed nipple.
  1. Tighten to 14 Nm.
- Disconnect and remove the brake bleed pipes and bottles.
- Install the bleed nipple dust caps.

All vehicles

GETtheMANUALS.org

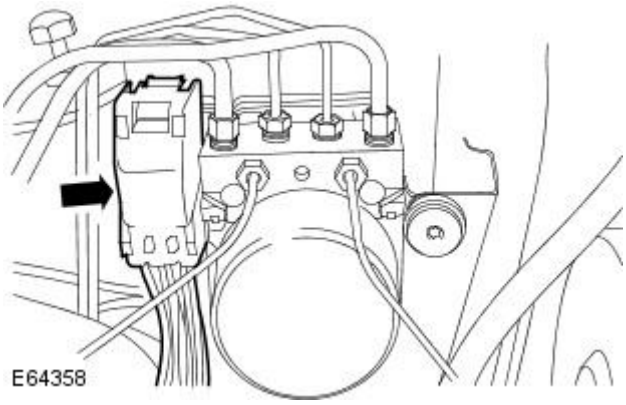


**7.** Disconnect the hydraulic control unit (HCU) electrical connector.

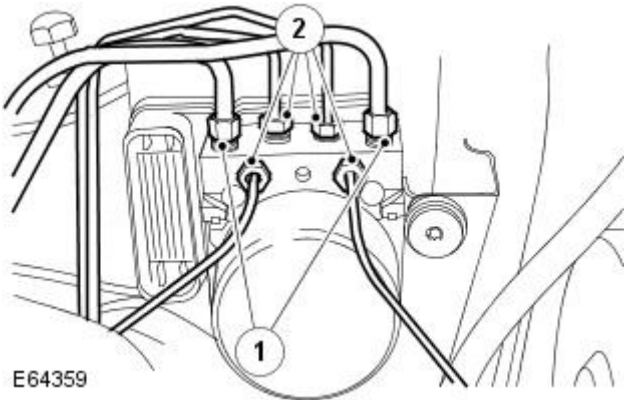


**8.** CAUTIONS:

If brake fluid is spilt on the paintwork, the effected area must be immediately washed down with cold water. Failure to follow this instruction may result in damage to the vehicle.

To minimise brake fluid loss the brake tubes must be disconnected in the order shown. Failure to follow this instruction may result in damage to the vehicle.

Cap the exposed brake tubes and ports to prevent loss of fluid and dirt ingress. Failure to follow this instruction may result in damage to the vehicle.

• NOTE: Using a suitable tool mark the position of the brake tubes to the HCU.

Disconnect the HCU brake tubes.

1. Disconnect the HCU primary and secondary circuit brake tubes.
2. Disconnect the HCU outlet brake tubes.

**9.** Remove the HCU.

## Installation

**1.** NOTE: A new HCU does not come supplied with the HCU base bracket. The HCU base bracket should be removed and installed to the new HCU. The HCU base bracket securing bolts must be torqued if a new HCU is being installed to the vehicle.

- Tighten the three HCU base bracket securing bolts to 9 Nm.

To install, reverse the removal procedure.

**2.** Tighten to 9 Nm.

GETtheMANUALS.org

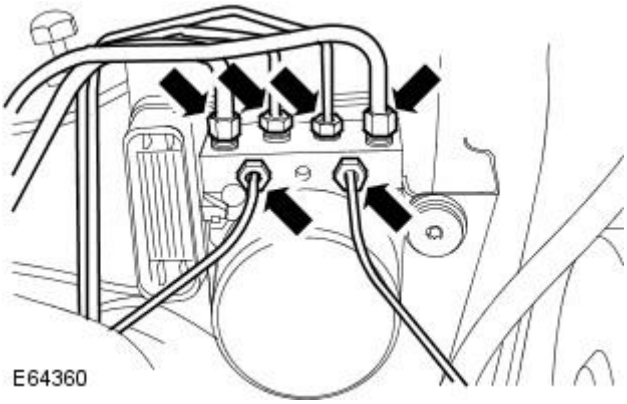


**3.** CAUTION: Make sure the brake tubes are installed to the correct ports. Failure to follow this instruction may result in damage to the vehicle.

Tighten to 17 Nm.

**4.** Bleed the anti-lock brake system (ABS).
For additional information, refer to: Brake System Bleeding - VIN Range: N52048->N99999 (206-00 Brake System - General Information, General Procedures).

GETtheMANUALS.org

# Anti-Lock Control - Stability Assist - Rear Wheel Speed Sensor

Removal and Installation

## Removal

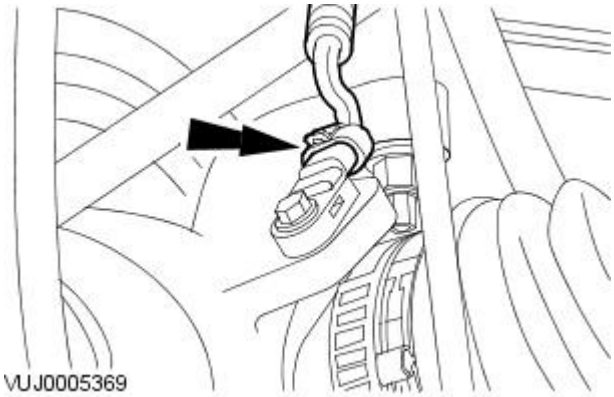


**1.** Raise and support the vehicle.
For additional information, refer to Section 100-02 Jacking and Lifting.

**2.** CAUTION: Make sure the ignition is in the **OFF** position before disconnecting the rear wheel speed sensor electrical connector.

Disconnect the rear wheel speed sensor electrical connector.

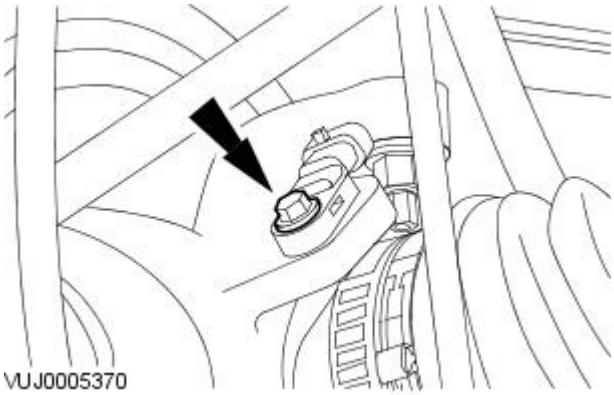


**3.** Remove the rear wheel speed sensor.

## Installation

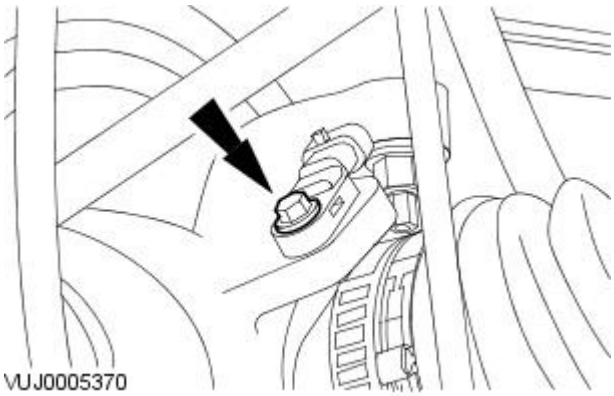


**1.** To install, reverse the removal procedure.

1. Tighten to 9 Nm.

GETtheMANUALS.org

# Anti-Lock Control - Stability Assist - Steering Wheel Rotation Sensor

Removal and Installation

## Removal

1. Remove the steering wheel.
   For additional information, refer to Section 211-04 Steering Column.
2. Remove the instrument panel lower trim panel.

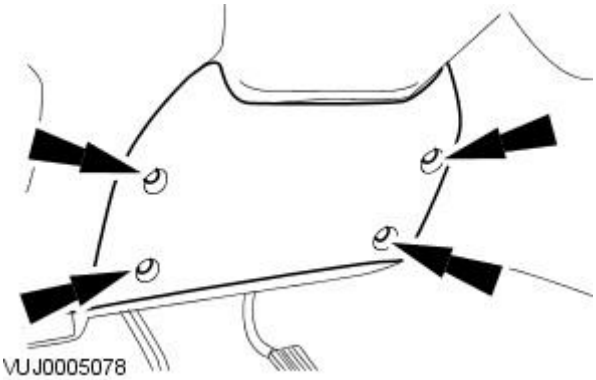


3. Detach the steering column lower shroud.

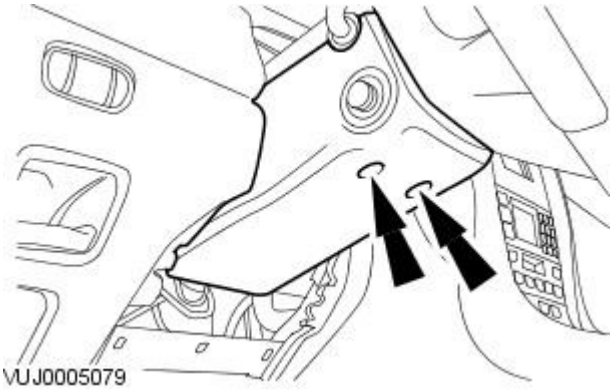


4. Remove the steering column lower shroud.
   - Disconnect the electrical connector.

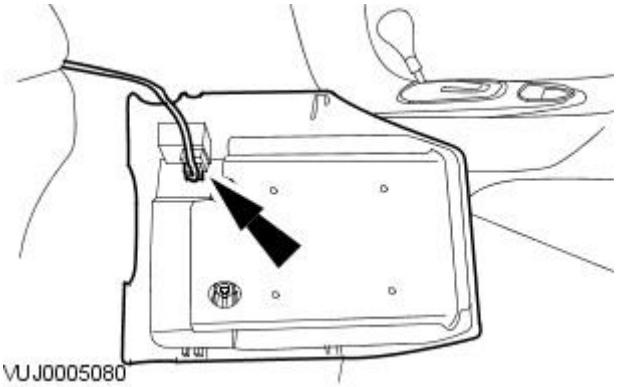


5. Disconnect the steering wheel rotation sensor electrical connector.

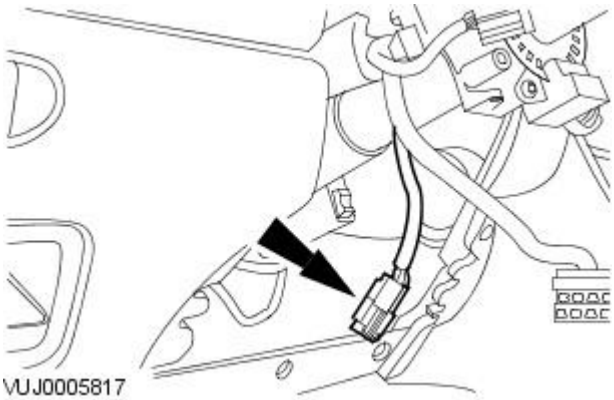


GETtheMANUALS.org

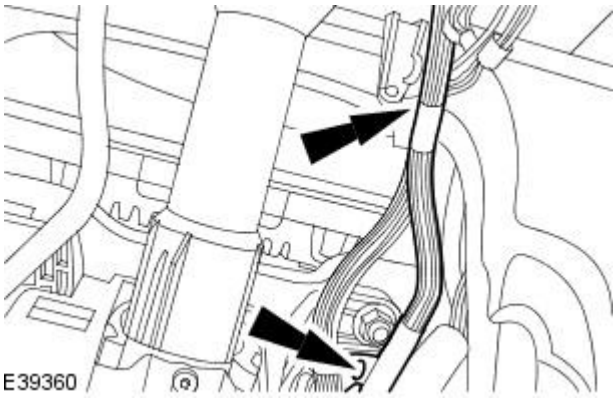


**6.** Detach the steering wheel rotation sensor electrical wiring harness from the steering column.

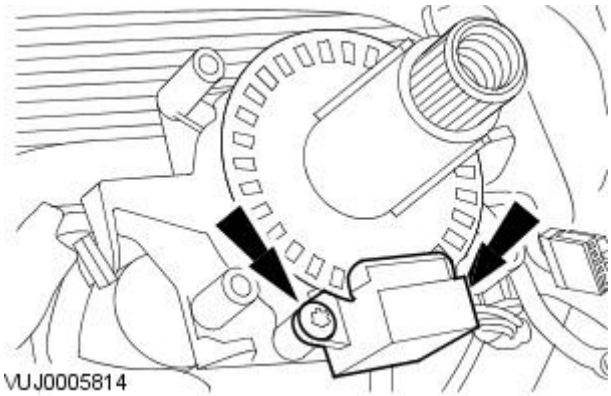


**7.** Remove the steering wheel rotation sensor.

## Installation

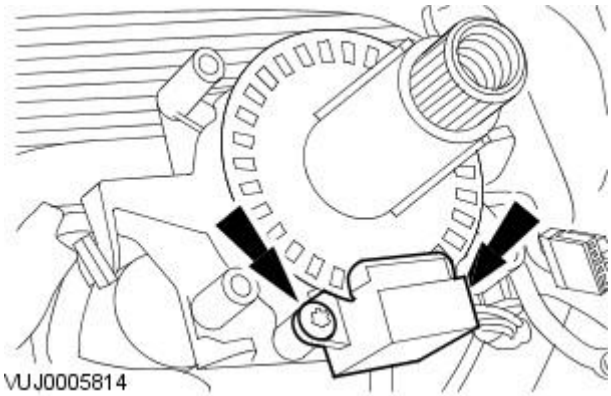


**1.** NOTE: Note the correct routing of the steering wheel rotation sensor electrical wiring harness.

To install, reverse the removal procedure.

- Tighten to 4 Nm.

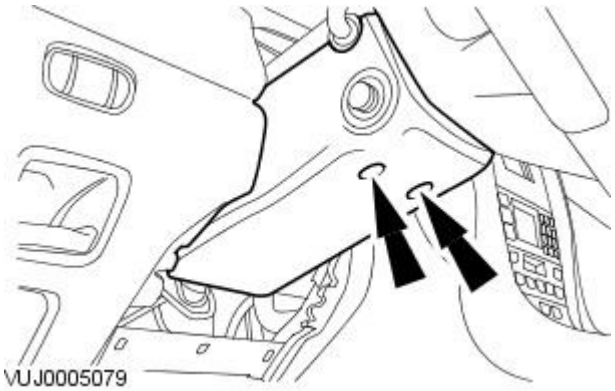


**2.** Tighten to 3 Nm.

GETtheMANUALS.org

# Anti-Lock Control - Stability Assist - Yaw Rate Sensor and Accelerometer

Removal and Installation

## Removal

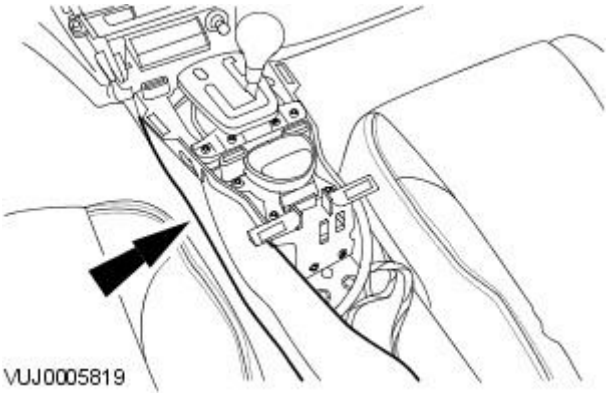


1. Disconnect the battery ground cable.
   For additional information, refer to Section 414-01 Battery, Mounting and Cables.
2. Remove the floor console.
   For additional information, refer to Section 501-12 Instrument Panel and Console.
3. Remove the floor console register duct.

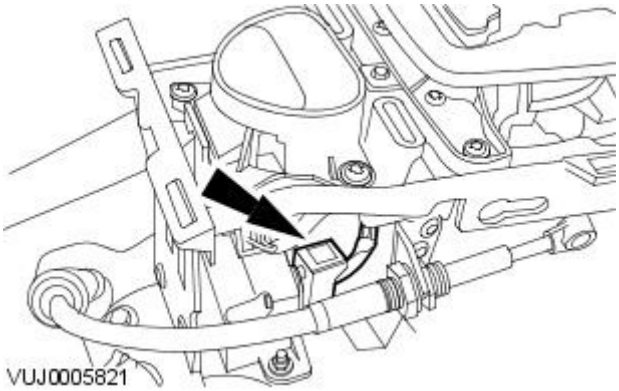


4. Disconnect the electrical connector.

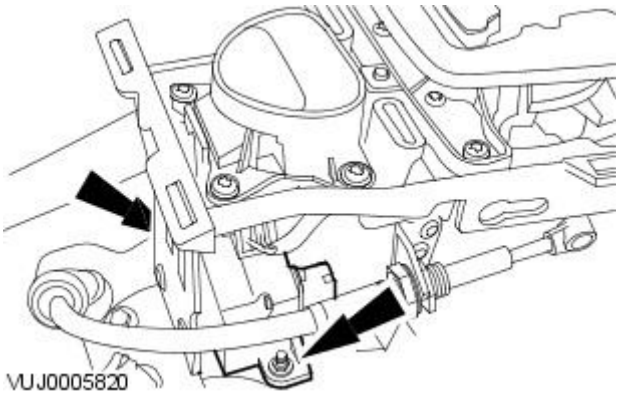


5. Remove the yaw rate sensor and accelerometer.

## Installation

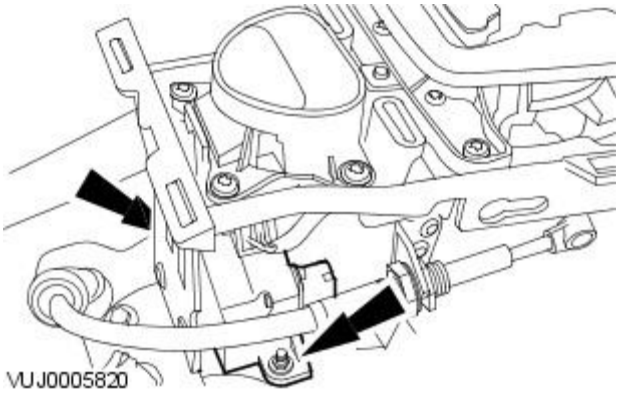


1. NOTE: If the yaw rate sensor and accelerometer appears damaged or is dropped during installation do not fit to vehicle.

• NOTE: Make sure the yaw rate sensor and accelerometer is fitted the correct way around.

To install, reverse the removal procedure.

- Tighten to 7 Nm.

GETtheMANUALS.org

Published: 20-Jul-2011

# Steering System - General Information -

**Steering Linkage Specifications**

| Steering Linkage Free Play | Measurement (mm) | Measurement (in) |
|---|---|---|
| Free play (measured at the steering wheel rim) | 0-6 | 0-0.24 |

**Power Steering Pump Specifications**

| Item | Specification |
|---|---|
| Power steering pump relief pressure | 106-114 bar |

**Lubricants, Fluids, Sealers and Adhesives**

| Item | Specification |
|---|---|
| Power steering fluid | Dexron 3 |

GETtheMANUALS.org

Published: 11-May-2011

# Steering System - General Information - Steering System

Description and Operation

The power steering system is a rack and pinion design, with an engine-driven pump providing the steering assistance. The system features variable steering assistance with vehicle speed and a variable ratio steering rack.

Absolute cleanliness must be observed when replenishing the fluid or dismantling any part of the system. New fluid from a sealed container must be used.

• NOTE: If the steering gear, pump or cooler are being replaced for leakage or noise related issues and there is no evidence of fluid contamination, there is no need to replace the reservoir.

In some cases where the fluid clearly contains particulate matter, and the system continues to function, flush the system with fresh fluid and replace the reservoir, as there is the possibility that the reservoir internal filter may be damaged or faulty.

GETtheMANUALS.org

# Steering System - General Information - Steering System

Diagnosis and Testing

## Inspection and Verification

1. **1.** Verify the customer concern by driving the vehicle.
2. **2.** Visually inspect for obvious signs of mechanical or electrical damage.

**Mechanical Inspection Chart**

| Mechanical Checks |
|---|
| • Incorrect tire pressure, loose wheel nuts, incorrect wheel alignment<br>• Loose tie-rods<br>• Loose damper and spring assemblies or ball joint<br>• Loose steering column shaft universal joints<br>• Loose pinch bolts on steering column shaft<br>• Loose steering gear assembly<br>• Check for external damage to the steering gear.<br>- Damaged tie-rods<br>-<br>CAUTION: If a steering gear assembly is returned under warranty with leaking seals, but there is also damage to the steering gear boot/boots the steering gear warranty will be invalid. This is due to the steering gear seals being damaged due to foreign materials entering the steering gear boot and damaging the steering gear seals thereafter.<br>Damaged steering gear boot<br>• Damaged accessory drive belt<br>• Binding or misaligned steering column, pump or steering gear<br>• Incorrect fluid level<br>• Hose leaks or line restrictions<br>• Hose fouling bodywork |

**Electrical Inspection Chart**

| Electrical Checks / Tests |
|---|
| • Make sure all connectors are in place (steering gear Servotronic solenoid and steering control module (SCM) - if applicable)<br>• Make sure all the fuses are in place and not blown<br>• DISCONNECT the steering gear transducer and the steering should become heavy<br>• TEST electrical values:<br>- Power Supply to the SCM = 12 Volts<br>- Steering gear transducer resistance 7.0 to 7.5 Ohms is normal (limits: less than 5 Ohms and greater than 9 Ohms would be declared unacceptable)<br>- Steering gear transducer voltage = 6 Volts<br>- Steering gear transducer current = 840 mA at 0 mph reducing to 0 mA at maximum speed<br>• RECONNECT all electrical items disturbed during testing |

3. **3.** If an obvious cause for an observed or reported concern is found, correct the cause (if possible) before proceeding to the next step.
4. **4.** Check the power steering fluid condition. For additional information, REFER to Power Steering Fluid Condition Check in this section.
5. **5.** If the concern is not visually evident, verify the symptom and REFER to Steering Fault Diagnosis by Symptom Charts in this section.

## Steering Relay Harness Connector

GETtheMANUALS.org

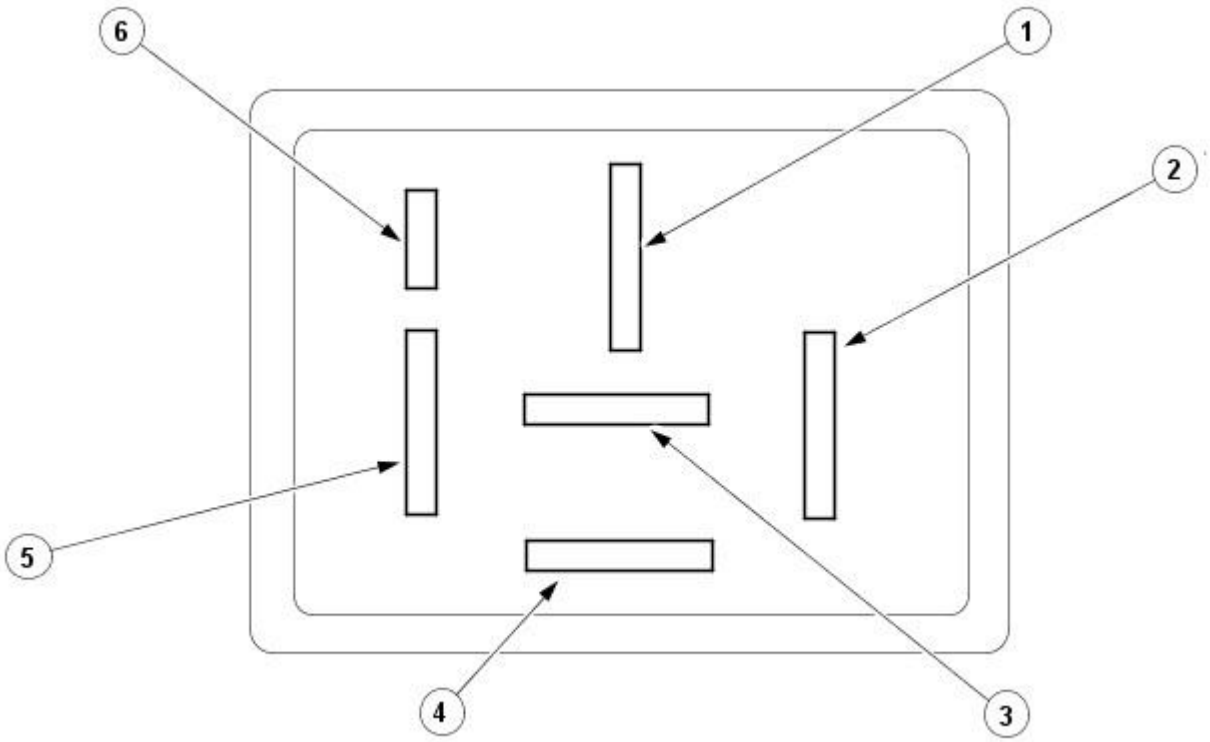


E39815

| Item | Description |
|---|---|
| 1 | Steering transducer ground |
| 2 | Ignition feed |
| 3 | Steering transducer feed |
| 4 | Ground |
| 5 | Speed sensor signal |
| 6 | Serial interface |

## Steering Linkage Inspection and Backlash (Freeplay) Check

CAUTION: Steering gear boots must be handled carefully to avoid damage. Use new clamps when installing steering gear boots.

Inspect the boots for cuts, deterioration, twisting or distortion. Check the steering gear boots to make sure they are tight. Install new boots or clamps as necessary.

• NOTE: The following steps must be carried out with assistance.

1. **1.** With the wheels in the straight ahead position, gently turn the steering wheel to the left and the right to check for free play.
2. **2.** Free play should be between 0 and 6 mm (0 and 0.24 in) at the steering wheel rim. If the free play exceeds this limit, either the ball joints are worn, the lower steering column joints are worn or the backlash of the steering gear is excessive.

CAUTION: DO NOT attempt to adjust the steering gear yoke. Failure to follow this instruction will result in the steering gear warranty to become invalid.

3. **3.** The backlash of the steering gear cannot be adjusted, install a new steering gear. For additional information, REFER to Section 211-02 Power Steering.
4. **4.** Grasp the steering wheel firmly and move it up and down and to the left and right without turning the wheel to check for column bearing wear, steering wheel or steering column. For additional information, REFER to Section 211-04 Steering Column.

## Power Steering Fluid Condition Check

1. **1.** Run the engine for 2 minutes.
2. **2.** Check the power steering fluid system level.
3. **3.** Observe the color and the odor. The color under normal circumstances should be dark reddish, not brown or black.
4. **4.** Allow the fluid to drip onto a facial tissue and examine the stain.
5. **5.** If evidence of solid material is found, the power steering fluid system should be drained for further inspection.
6. **6.** If fluid contamination or steering component failure is confirmed by the sediment in the power steering fluid system, REFER to Steering Fault Diagnosis by Symptom Charts in this section.

## Power Steering Pressure Test

Test Equipment

GETtheMANUALS.org

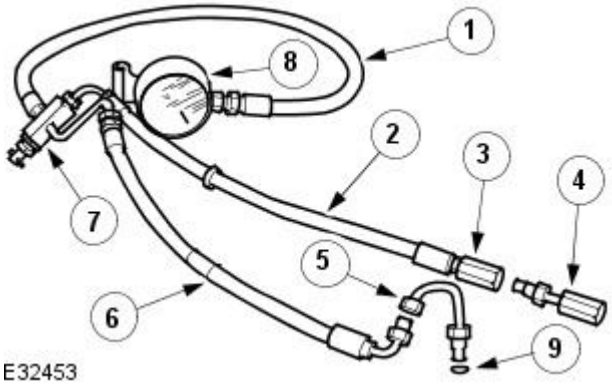


| Item | Special Tool Number | Description |
|---|---|---|
| 1 | 211-011 | Pressure Gauge Hose |
| 2 | 211-011-08 | Pump Return Hose |
| 3 | 211-011-07 | Pump Return Hose Connector |
| 4 | 211-011-03/2 | Test Equipment to High Pressure Hose Adaptor |
| 5 | 211-011-03/1 | Pump High Pressure Outlet to Hose Adaptor |
| 6 | 211-011-02 | Pump Adaptor to Control Valve Hose |
| 7 | 211-011-01 | Control Valve |
| 8 | 211-011 | Pressure Gauge |
| 9 | - | 'O' Ring Seal |

The measurement of the maximum system pressure, (which is governed by the pressure relief valve) is achieved by inserting the Service Tool (pressure gauge and adaptors) into the fluid circuit of the power steering system. Run the engine at idle speed, turn the steering from lock to lock and read the maximum pressure recorded on the gauge.

### Installing Test Equipment

To install the pressure test equipment:

- Place a suitable drain tray below the power steering pump.
- Install a hose clamp on the reservoir to pump hose prior to disconnecting any hoses, to avoid unnecessary loss of fluid.
- Disconnect the hose from the power steering pump high pressure outlet.
- Install the pump outlet to hose adaptor (5). Do not omit the 'O' ring seal (9).
- Connect the power steering pump adaptor to control valve hose (6) of the test equipment.
- Install the adaptor (4) in the high pressure hose previously removed from the power steering pump outlet.
- Connect the connector (3) of the test equipment hose (2) to the adaptor (4).
- Remove the hose clamp from the reservoir hose.
- Start the engine.

With the control valve (7) OPEN and the engine idling, the following system pressures may be checked:

- During turning.
- When the steering is held on full lock.
- With the steering at rest.

• CAUTIONS:

To avoid excessive heating of the power steering pump, do not close the valve for longer than 5 seconds maximum.

Do not drive the vehicle with the test equipment installed.

With the control valve (7) CLOSED the power steering pump maximum output pressure can be checked.

### Removing Test Equipment

To remove the test equipment:

- Install a hose clamp on the reservoir to power steering pump hose.
- Removing the test equipment is a reversal of the installation instructions.
- Install a new 'O' ring seal (9) to the power steering pump high pressure outlet to hose connection.
- Install the original hose to the power steering pump.
- Remove the clamp from the reservoir to the power steering pump hose.
- Top-up the reservoir fluid.
- Bleed the power steering system. For additional information,
  REFER to Power Steering System Bleeding - in this section.

## Steering Fault Diagnosis by Symptom Charts

### Leakage

| Condition | Possible Sources | Action |
|---|---|---|
| • Fluid leakage | Confirm the position of the fluid leak. | • CLEAN the area of the leak.<br>• Inspect the area and confirm the exact position of leak.<br>• Make sure the fluid is not from another system on the vehicle. |
| | • Overfilled system. | • CORRECT the fluid level as necessary. |
| | • Component leak. | • NOTE: Record the position of the leak and some indication of the rate of the leak on the Warranty Return Record Sheet.<br>• LOCATE the suspect component or CHECK hose connections and repair as necessary. |

GETtheMANUALS.org

| Condition | Possible Sources | Action |
|---|---|---|
| | • Damaged fluid cap. | • INSTALL a new fluid cap. |
| | • Loose or damaged hose fittings. | • TIGHTEN or INSTALL a new hose as necessary. |
| | • Leakage at power steering pump. | • INSTALL a new power steering pump as necessary. For additional information, REFER to Section 211-02 Power Steering. |
| • Fluid leakage | • Leakage at steering hose to steering gear connection. | • CHECK steering hose to steering gear connection for leakage. CHECK and TIGHTEN the steering hose to steering gear connection retaining bolts/bolts as necessary. |
| | • Power steering fluid leakage at O-ring seals. | • CHECK the power steering system for signs of steering fluid loss from O-ring seals.<br>• INSTALL new O-ring seals as necessary.<br>• BLEED the power steering system. For additional information, REFER to Section 211-00 Steering System - General Information. |
| | • Power steering fluid leakage from transfer pipes. | • CHECK the power steering system for signs of steering fluid loss from the transfer pipes.<br>• CHECK and TIGHTEN the transfer pipes if required, INSTALL new transfer pipes as necessary.<br>• BLEED the power steering system. For additional information, REFER to Section 211-00 Steering System - General Information. |
| | • Power steering fluid leakage from the steering gear. | • CHECK the power steering gear for signs of fluid loss.<br>• INSTALL a new steering gear as necessary. For additional information, REFER to Section 211-02 Power Steering. |
| | • Power steering fluid leakage from steering gear boot. | • CHECK the power steering gear for signs of fluid loss.<br>• INSTALL a new steering gear as necessary. For additional information, REFER to Section 211-02 Power Steering. |

**Functional**

| Condition | Possible Sources | Action |
|---|---|---|
| • Free play at steering wheel | • Excess play in the steering linkage. | • CHECK the steering linkage for excess play. For additional information, REFER to the Steering Linkage Inspection and Backlash (Freeplay) Check in this section. |
| | • Steering wheel loose. | • CHECK and TIGHTEN the steering wheel retaining bolt/bolts as necessary. For additional information, REFER to Section 211-04 Steering Column. |
| | • Lower steering column pinch bolt loose. | • CHECK and TIGHTEN the lower steering column pinch bolts as necessary. For additional information, REFER to Section 211-04 Steering Column. |
| | • Excessive wear in lower steering column. | • CHECK for lower steering column for wear in the universal joints. If wear is present, INSTALL a new lower steering column as necessary. |
| | • Wear in suspension joints. | CAUTION: DO NOT attempt to adjust the steering gear yoke. Failure to follow this instruction will result in the steering gear warranty to become invalid.<br>• CHECK for excess wear in the front suspension joints. For additional information, REFER to Section 204-00 Suspension System - General Information. |
| • Vehicle wanders from side to side on the road, when the vehicle is driven straight ahead and the steering wheel is held in a firm position | • Incorrect tire pressure or tire size. | • CHECK and ADJUST the tire pressure. For additional information, REFER to Section 204-04 Wheels and Tires.<br>• INSTALL a new tire as necessary. For additional information, REFER to Section 204-04 Wheels and Tires. |
| | • Vehicle is unevenly or excessively loaded. | • ADJUST the load evenly. |
| | • Loose/worn tie-rods. | • INSTALL a new tie-rod end. For additional information, REFER to Section 211-03 Steering Linkage. |
| | • Steering gear bolts loose or damaged. | • TIGHTEN or INSTALL new bolts. |
| | • Loose or worn suspension ball joint(s). | • INSTALL a new suspension ball joint assembly. For additional information, REFER to Section 204-01 Front Suspension. |
| | • Steering column universal joint pinch bolt loose. | • TIGHTEN the steering column universal joint pinch bolt. For additional information, REFER to Section 211-04 Steering Column. |
| | • Incorrect toe adjustment. | • ADJUST as necessary. For additional information, REFER to Section 204-00 Suspension System - General Information. |

GETtheMANUALS.org

| Condition | Possible Sources | Action |
|---|---|---|
| | • Loose or worn rear suspension. | • TIGHTEN loose, or INSTALL new rear suspension components. For additional information, REFER to Section 204-02 Rear Suspension. |
| • Vehicle tends to pull to one side when driven on a level surface | • Incorrect tire pressure.<br>• Incorrect tire size or different tire/tread type.<br>• Uneven tire wear | • CHECK and ADJUST the tire pressure. For additional information, REFER to Section 204-04 Wheels and Tires.<br>• INSTALL a new tire as necessary. For additional information, REFER to Section 204-04 Wheels and Tires. |
| | • Vehicle is unevenly loaded or overloaded. | • Adjust the load. |
| | • Incorrect toe adjustment. | • ADJUST as necessary. For additional information, REFER to Section 204-00 Suspension System - General Information. |
| | • Damaged front suspension components. | • INSTALL new front suspension components as necessary. For additional information, REFER to Section 204-01 Front Suspension. |
| | • Damaged rear suspension components. | • INSTALL new rear suspension components as necessary. For additional information, REFER to Section 204-02 Rear Suspension. |
| | • Steering gear valve effort out of balance. | • SHIFT the transmission into NEUTRAL while driving at no more than 30 miles/hour (50 km/h) and turn the ignition to position I (engine OFF-coasting). If the vehicle does not pull with the engine off, INSTALL a new steering gear. For additional information, REFER to Section 211-02 Power Steering.<br>• If the vehicle does drift with the engine off, CROSS SWITCH front wheel assemblies.<br>• If the vehicle pulls to the opposite side, SWITCH wheels that were on the rear to the same side on the front.<br>• If the vehicle pull direction is not changed, CHECK the front suspension components and toe adjustments. For additional information, REFER to Section 204-01 Front Suspension. |
| | • Check the front and rear brakes for correct operation. | • ADJUST as necessary. For additional information, REFER to Section 206-00 Brake System - General Information. |
| | • Check for bent rear suspension components and for damaged coil springs in the front suspension. | • INSTALL new rear suspension components as necessary. For additional information, REFER to Section 204-02 Rear Suspension.<br>• INSTALL new front suspension components as necessary. For additional information, REFER to Section 204-01 Front Suspension. |
| | • Check the rear suspension for loose or worn suspension components. | • TIGHTEN or INSTALL new components as necessary. For additional information, REFER to Section 204-02 Rear Suspension. |
| | • Incorrect underbody alignment. | • CHECK underbody alignment. For additional information, REFER to Section 502-00 Uni-Body, Subframe and Mounting System. |
| • Poor returnability of the steering | • Lower steering column interference. | • CHECK the steering column is free from interference from the engine harness, sound proofing or the floor covering. |
| | • Incorrect tire pressure. | • CHECK and ADJUST the tire pressure. For additional information, REFER to Section 204-04 Wheels and Tires. |
| | • Incorrect tire size or type. | • INSTALL a new tire as necessary. For additional information, REFER to Section 204-04 Wheels and Tires. |
| | • Steering column upper shroud fouling on the steering wheel. | • CHECK steering column upper shroud for fouling. ADJUST as necessary. |
| | • Steering column universal joints binding. | • INSTALL a new steering column. For additional information, REFER to Section 211-04 Steering Column. |
| | • Steering column shaft floor seal binding. | • CHECK the steering column shaft floor seal for correct fitment and REFIT as necessary. |
| | • Steering column shaft floor seal may be torn. | • INSTALL a new steering column shaft floor seal as necessary. |
| | • Binding or damaged tie-rods. | • CHECK tie-rod end for excessive wear or tightness in ball joint. INSTALL a new tie-rod end. For additional information, REFER to Section 211-03 Steering Linkage. |

GETtheMANUALS.org

| Condition | Possible Sources | Action |
|---|---|---|
| | • Damaged or worn front suspension components. | • INSTALL new front suspension components as necessary. For additional information, REFER to Section 204-01 Front Suspension. |
| | • Incorrect toe adjustment. | • ADJUST as necessary. For additional information, REFER to Section 204-00 Suspension System - General Information. |
| • Excessive steering efforts required during low speed manoeuvring and/or during parking manoeuvres | • Low power steering fluid. | • CHECK steering system for signs of steering fluid loss.<br>• BLEED the power steering system. For additional information, REFER to Section 211-00 Steering System - General Information. |
| | • Damaged accessory drive belt tensioner. | • INSTALL a new accessory drive belt tensioner. |
| | • Hose or cooler line restriction. | • CHECK hose or cooler lines for correct routing.<br>• INSTALL a new hose as necessary. |
| | • Fluid aeration. | • BLEED the system. For additional information, REFER to Power Steering System Bleeding in this section. |
| | • Steering transducer not closed - no feed voltage. | • CHECK the steering transducer circuit. For additional information, REFER to the wiring diagrams.<br>• Carry out the electrical checks and tests. For additional information, REFER to the Electrical Checks and Tests in this section. |
| | • Steering transducer not closed - cable fault. | • CHECK the steering transducer circuit. For additional information, REFER to the wiring diagrams.<br>• Carry out the electrical checks and tests. For additional information, REFER to the Electrical Checks and Tests in this section. |
| | • Steering control module (SCM) defective. | • CHECK the SCM and INSTALL a new SCM as necessary. |
| | • Power steering fluid delivery pressure or flow too low. | • CHECK the power steering pressure. For additional information, REFER to the Power Steering Pressure Test in this section.<br>• INSTALL a new power steering pump as necessary. For additional information, REFER to Section 211-02 Power Steering. |
| | • Internal steering gear leakage. | • CHECK the power steering pressure. For additional information, REFER to the Power Steering Pressure Test in this section.<br>• INSTALL a new steering gear as necessary. For additional information, REFER to Section 211-02 Power Steering. |
| • Steering operation is very heavy when driving, but when stationary manoeuvring is good | • Steering transducer open early. | • CHECK steering transducer and INSTALL a new steering transducer as necessary.<br>• Carry out the electrical checks and tests. For additional information, REFER to the Electrical Checks and Tests in this section. |
| | • Steering transducer open early, steering control module (SCM) fault. | • CHECK SCM and INSTALL a new SCM as necessary. |
| | • Steering transducer open early, speedo signal error. | • CHECK speedo circuit. For additional information, REFER to the wiring diagrams. |
| • Steering operation is very light when driving, but when stationary manoeuvring is good | • Steering transducer not open, (no power steering fluid flow). | • CHECK the power steering fluid condition. For additional information, REFER to the Power Steering Fluid condition check in this section. |
| | • Steering transducer not open, steering control module (SCM) fault. | • CHECK the SCM and INSTALL a new SCM as necessary.<br>• Carry out the electrical checks and tests. For additional information, REFER to the Electrical Checks and Tests in this section. |
| | • Steering transducer not open, speedo signal error. | • CHECK the speedo circuit. For additional information, REFER to the wiring diagrams. |
| | • CHECK the power steering fluid low pressure pipe for restricted flow. | • INSTALL a new power steering fluid low pressure pipe. |
| • Steering heavy operation during rapid manoeuvring | • Air in power steering system. | • CHECK for an air leak into the power steering system and repair as necessary.<br>• BLEED the power steering system. For additional information, REFER to Power Steering System Bleeding - in this section. |

GETtheMANUALS.org

| Condition | Possible Sources | Action |
|---|---|---|
| | • Fluid loss at the power steering pump shaft seal. | • CHECK the power steering pump for signs of steering fluid loss.<br>• INSTALL a new power steering pump as necessary. For additional information,<br>REFER to Section 211-02 Power Steering. |
| | • Power steering fluid delivery pressure or flow too low. | • CHECK the power steering pump for signs of steering fluid loss.<br>• CHECK the power steering pressure. For additional information, REFER to the Power Steering Pressure Test in this section.<br>• INSTALL a new power steering pump as necessary. For additional information,<br>REFER to Section 211-02 Power Steering. |
| • Steering heavy operation in one direction | • Lower steering column interference. | • CHECK the steering column is free from interference from the engine harness, sound proofing or the floor covering. |
| | • Incorrect steering geometry. | • CHECK the front wheel alignment. For additional information,<br>REFER to Section 204-00 Suspension System - General Information. |
| | • Faulty rotary valve/seal. | • CHECK the power steering pressure. For additional information, REFER to the Power Steering Pressure Test in this section.<br>• INSTALL a new steering gear as necessary. For additional information,<br>REFER to Section 211-02 Power Steering. |
| | • Tire fouling on the wheel arch liner. | • CHECK for clearance between the tire and the wheel arch liner.<br>• Remove and refit the wheel arch liner or INSTALL a new wheel arch liner as necessary. |
| • Steering heavy operation in both directions | • Low power steering fluid. | • CHECK steering system for signs of steering fluid loss.<br>• BLEED the power steering system. For additional information,<br>REFER to Section 211-00 Steering System - General Information. |
| | • Air in power steering system. | • CHECK the power steering pump for signs of steering fluid loss.<br>• INSTALL a new power steering pump as necessary. For additional information,<br>REFER to Section 211-02 Power Steering. |
| | • Fluid loss at the power steering pump shaft seal. | • CHECK the power steering pump for signs of steering fluid loss.<br>• INSTALL a new power steering pump as necessary. For additional information,<br>REFER to Section 211-02 Power Steering. |
| | • Power steering fluid delivery pressure or flow too low. | • CHECK the power steering pump for signs of steering fluid loss.<br>• CHECK the power steering pressure. For additional information, REFER to the Power Steering Pressure Test in this section.<br>• INSTALL a new power steering pump as necessary. For additional information,<br>REFER to Section 211-02 Power Steering. |
| • Steering operation varies from heavy to light when driving at constant speed | • Lower steering column interference. | • CHECK the steering column is free from interference from the engine harness, sound proofing or the floor covering. |
| | • Incorrect speedometer signal. | • CHECK the speedo circuit. For additional information, refer to the wiring diagrams. |
| | • Steering transducer cable/connection faulty or grounded. | • CHECK the steering transducer circuit. For additional information, refer to the wiring diagrams.<br>• Carry out the electrical checks and tests. For additional information, REFER to the Electrical Checks and Tests in this section. |
| • Steering wheel varies from light to heavy two times per revolution | • Lower steering column interference. | • CHECK the steering column is free from interference from the engine harness, sound proofing or the floor covering. |
| | • Steering column universal joints binding. | • INSTALL a new steering column. For additional information,<br>REFER to Section 211-04 Steering Column. |
| | • Seized or damaged steering components. | • CHECK for wear or failure of suspension bushes and ball joints. For additional information,<br>REFER to Section 204-00 Suspension System - General Information. |

**Noise**

GETtheMANUALS.org

| Condition | Possible Sources | Action |
|---|---|---|
| • Accessory drive belt squeal | • Incorrect accessory drive belt tension or accessory drive belt glazed. | • CHECK accessory drive belt condition and INSTALL a new accessory drive belt as necessary. For additional information, REFER to Section 303-05 Accessory Drive. |
| • Chirp noise in the steering pump | • Loose or worn accessory drive belt. | • CHECK accessory drive belt condition and INSTALL a new accessory drive belt as necessary. For additional information, REFER to Section 303-05 Accessory Drive. |
| • Power steering pump noisy | • Low power steering fluid. | • CHECK steering system for signs of steering fluid loss.<br>• BLEED the power steering system. For additional information, REFER to Section 211-00 Steering System - General Information. |
| | • Power steering pump worn or otherwise defective. | • CHECK for leaks. REPAIR as necessary.<br>• CHECK the power steering pressure. For additional information, REFER to the Power Steering Pressure Test in this section.<br>• INSTALL a new power steering pump as necessary. For additional information, REFER to Section 211-02 Power Steering. |
| • Whine type noise | • Aerated fluid. | • BLEED the power steering system. For additional information, REFER to Power Steering System Bleeding - in this section. |
| | • Power steering pump. | • CHECK for leaks. REPAIR as necessary.<br>• INSTALL a new power steering pump as necessary. For additional information, REFER to Section 211-02 Power Steering. |
| • Noise during steering gear movement | • Low power steering fluid. | • CHECK steering system for signs of steering fluid loss.<br>• BLEED the power steering system. For additional information, REFER to Section 211-00 Steering System - General Information. |
| | • Water contamination to the power steering fluid. | • DRAIN the power steering system.<br>• BLEED the power steering system. For additional information, REFER to Section 211-00 Steering System - General Information. |
| | • Cavitation due to restricted power steering feed hose. | • CHECK and reposition power steering feed hoses and INSTALL new hoses as necessary. |
| • Continuous noise | • Low power steering fluid. | • CHECK steering system for signs of steering fluid loss.<br>• BLEED the power steering system. For additional information, REFER to Section 211-00 Steering System - General Information. |
| | • Power steering pump drive loose. | • CHECK power steering coupling and power steering pump.<br>• INSTALL a new power steering coupling or power steering pump as necessary. For additional information, REFER to Section 211-02 Power Steering. |
| | • Incorrect accessory drive belt tension or accessory drive belt glazed. | • CHECK accessory drive belt condition and INSTALL a new accessory drive belt as necessary. For additional information, REFER to Section 303-05 Accessory Drive. |
| | • Power steering pump drive pulley loose. | • CHECK and TIGHTEN the power steering pump drive pulley retaining bolts as necessary. For additional information, REFER to Section 303-03A Engine Cooling / 303-03B Supercharger Cooling / 303-03C Engine Cooling. |
| | • Power steering pump retaining bolts loose. | • CHECK the power steering pump retaining bolts and TIGHTEN as necessary. |
| | • Power steering hose/pipe in contact with the vehicles body. | • CHECK and reposition power steering hoses/pipes, INSTALL new hoses/pipes as necessary. |
| | • Power steering hose restricted/twisted. | • CHECK and reposition power steering hose, replace hose as necessary. |

**Vibration**

| Condition | Possible Sources | Action |
|---|---|---|
| • Feedback (knocking noises in the steering gear) - condition where roughness is felt in the steering wheel by the driver when the vehicle is driven over rough surfaces | • Loose/worn tie-rods. | • INSTALL a new tie-rod end. For additional information, REFER to Section 211-03 Steering Linkage. |
| | • Steering gear retaining bolts loose or damaged. | CAUTION: DO NOT attempt to adjust the steering gear yoke. Failure to follow this instruction will result in the steering gear warranty to become invalid.<br>• CHECK and TIGHTEN the steering gear retaining bolts.<br>• INSTALL new retaining bolts as necessary. For additional information, REFER to Section 211-02 Power Steering. |
| | • Loose suspension bushing, bolts or ball joints. | • TIGHTEN or INSTALL new components as necessary. For additional information, REFER to Section 204-01 Front Suspension. |
| | • Steering column retaining bolts loose. | CAUTION: DO NOT attempt to adjust the steering gear yoke. Failure to follow this instruction will result in the steering gear warranty to become invalid. |

GETtheMANUALS.com

| Condition | Possible Sources | Action |
|---|---|---|
| | | • CHECK and TIGHTEN the steering column retaining bolts/nuts and pinch bolts if required. For additional information, REFER to Section 211-04 Steering Column. |
| | • Excessive wear in steering column assembly. | • CHECK for steering column for wear in the universal joints and bearings. If wear is present, INSTALL a new steering column as necessary. For additional information, REFER to Section 211-04 Steering Column. |
| • Nibble (Shimmy) Oscillation of the steering wheel (not vertical which is SHAKE). This is driven by road wheel imbalance. | • Road wheel imbalance. | • CHECK for road wheel imbalance.<br>• CHECK for relevant SERVICE BULLETINS/SERVICE ACTIONS for the vehicle on Jaguar Communications Online (JCOL) or in hard copy form. |
| | • Steering wheel replacement. | • CHECK for relevant SERVICE BULLETINS/SERVICE ACTIONS for the vehicle on Jaguar Communications Online (JCOL) or in hard copy form. |
| | • Rack replacement. | • CHECK for relevant SERVICE BULLETINS/SERVICE ACTIONS for the vehicle on Jaguar Communications Online (JCOL) or in hard copy form. |

## Description of General Steering System Noises

### Boom

Rhythmic sound like a drum roll or distant thunder. May cause pressure on the ear drum.

### Buzz

Low-pitched sound, like a bee. Usually associated with vibrations.

### Chatter

Rapidly repeating metallic sound.

### Chuckle

Rapid noise that sounds like a stick against the spokes of a spinning bicycle wheel.

### Chirp

High pitched rapidly repeating sound, like chirping birds.

### Click

Light sound, like a ball point pen being clicked.

### Click / Thump

Heavy metal-to-metal sound, like a hammer striking steel.

### Grind

Abrasive sound, like a grinding wheel or sandpaper rubbing against wood.

### Groan / Moan

Continuous, low-pitched humming sound.

### Groan / Howl

Low, guttural sound, like an angry dog.

### Hiss

Continuous sound like air escaping from a tire valve.

### Hum

Continuous sound of varying frequencies, like a wire humming in the wind.

### Knock

Heavy, loud repeating sound like a knock on a door.

### Ping

Similar to knock, except at higher frequency.

### Rattle

A sound suggesting looseness, such as marbles rolling around in a can.

GETtheMANUALS.org

### Roar

Deep, long, prolonged sound like an animal, or winds and ocean waves.

### Rumble

Low, heavy continuous sound like that made by wagons or thunder.

### Scrape

Grating noise like one hard plastic rubbing part rubbing against another.

### Squeak

High-pitched sound like rubbing a clean window.

### Squeal

Continuous, high-pitched sound like running finger nails across a chalkboard.

### Tap

Light, hammering sound like tapping pencil on edge of table. May be rhythmic or intermittent.

### Weep

Continuous mid-range sound (lower frequency than squeal, higher frequency than groan).

### Whir/Whine

High-pitched buzzing sound, like an electric motor or drill.

### Whistle

Sharp, shrill sound, like wind passing a small opening.

## Description of Specific Steering System Noise Types

### Belt Squeal

Belt squeal is a high frequency air-borne noise generated by slippage of the ribbed Vee belt on the power steering pump pulley. Squeal increases with system loading and at the end of lock.

### Clonk

Clonk is a structure-borne noise heard as a loose-sounding rattle or vibration coming from the steering column. Clonk can be identified by driving and turning over cobblestones, rough roads, or high frequency bumps such as 25-50 mm tall tar strips. Clonk requires a tie-rod load impact.

### Column Knock

Column knock is a loose-sounding rattle or vibration generated by the steering column shaft contacting other portions of the column assembly. The noise is both audible and tactile. Column knock is generated by driving over cobblestones or rough pavement. It is not necessary to turn the steering wheel to create this noise.

### Column Rattle

Column rattle is a metallic sounding noise created when applying a highly impulsive force to the steering wheel. Column rattle is often used to combine the more general group of column noises including clonk and column knock. Column rattle noises can be caused by clonk, knock, loose column components, bonus parts etc. A series of parked, straight-line driving, and cornering test should be carried out to isolate the source/sources.

### Grinding/Scrape

Grinding is a low frequency noise in the column when the steering wheel is turned. Is generally caused by interference between moving components such as the steering wheel to steering column shroud.

### Grunt (Squawk)

Grunt is a "honking" sound elicited when coming off one of the steering stops. Grunt is generally excited during parking manoeuvres with a low to medium speed steering input.

### Hiss (Swish)

Hiss or Valve Hiss is a high-frequency sound coming from the steering gear when the system is loaded. It is a rushing or "swish" noise that doesn't change frequency with RPM. Hiss is the general noise generated by the flow of hydraulic fluid through restrictions in the steering system. Restrictions include the rotary steering valve, power steering tubes, connectors, tuning orifices, etc. Hiss can be air-borne and structure-borne, but the structure-borne path through the steering intermediate shaft is usually dominant.

### Moan (Groan)

Moan is the general structure-borne noise of the steering system. Moan is primarily transmitted to the driver via the body structure through the pump mount, engine mounts, power steering lines and power steering brackets. On some vehicles, moan is a load humming noise, often present when the wheel is turned and the system is loaded. It may change frequency with engine RPM and if the system is loaded or unloaded.

### Rack Knock (Rack Slap)

CAUTION: DO NOT attempt to adjust the steering gear yoke. Failure to follow this instruction will result in the steering gear warranty to become invalid.

GETtheMANUALS.org

Rack Knock is a rattle sound and steering wheel vibration caused by separation of the steering gear and pinion while driving over bumps. It

is a structure-borne noise transmitted through the intermediate shaft and column. Rack knock can also be heard as a "thump" or impact noise that occurs with the vehicle stationary when the steering wheel is released from a loaded position and allowed to return to rest. Noise occurs with the engine on or off.

### Rattles

Rattles are noises caused by knocking or hitting with components in the steering system. Steering rattles can occur in the engine compartment, the suspension, or the passenger compartment . Rattles can be caused by loose parts, movable and flexible parts, and improper clearances.

### Squeaks/Scrapes

Squeaks/Scrapes are noises due to friction or component rubbing anywhere in the steering system. Squeaks/Scrapes have appeared in steering linkages and joints, in column components and in column and steering wheel trim parts.

### Weep

Weep is an air-borne noise, occasionally generated when turning the steering across lock at a constant rate. When present on a vehicle the noise, once initiated can often be maintained across a large proportion of the available steering movement.

### Whistle

Whistle is similar to hiss but is louder and of a higher frequency. It is also more of a pure tone noise than hiss. Whistle is air-borne and is generated by a high flow rate of hydraulic fluid through a small restriction.

### Zip

Zip noise is the air-borne noise generated by power steering pump cavitation when power steering fluid does not flow freely through the suction hose from the reservoir to the pump. Zip primarily occurs during cold weather at start-up.

## Steering System Vibrations and Harshness

### Buzz

Buzz is a tactile rotary vibration felt in the steering wheel for slow steering inputs. Buzz can also be called a grinding feel and it is closely related to grunt and is caused by high system gain with low damping. Buzz is generally excited during parking manoeuvres with low to medium speed steering input.

### Buzz (Electrical)

A different steering buzz can be caused by pulse width modulated (PWM) electric actuators used in variable assist steering systems. This buzz is felt by turning the ignition key to run without starting the engine and holding onto the steering wheel. In extreme cases, the buzz can be felt with the engine running also.

### Column/Steering Wheel Shake

Column shake is a low frequency vertical vibration excited by primary engine vibrations.

### Nibble (Shimmy)

Steering nibble is a rotary oscillation or vibration of the steering wheel, which can be excited at a specific vehicle speed. Nibble is driven by wheel and tire imbalance exciting a suspension recession mode, which then translates into steering gear travel and finally steering wheel nibble.

### Shudder (Judder)

Shudder is a low frequency oscillation of the entire steering system (tire, wheels, steering gear and linkage, etc.) when the vehicle is steered during static-park or at low speeds. Shudder is very dependent on road surface.

### Torque Ripple

Torque ripple is a concern with Electric Power Steering (EPS) systems. Torque ripple is most evident at static-park steering the wheel very slowly from lock to lock. Torque ripple is primarily caused by motor commutation.

### Torque/Velocity Variation (Phasing/Effort Cycling)

Steering wheel torque variation occurring twice in one revolution is normally as a result of problems with the lower steering column (intermediate shaft), but foul conditions generally result in either constant stiffness or single point stiffness. Depending upon the orientation of the joints, the steering can feel asymmetric (torque falling off in one direction and rising in the other) or else it can simply have pronounced peaks and troughs as the steering moves from lock to lock.

### Wheel Fight (Kick Back)

Wheel fight is excess feedback of sudden road forces through the steering system and back to the driver. It is evaluated at all vehicle speeds over cobblestones, rough roads, and potholes. The tires, wheels, and suspension generate forces into the steering systems. Steering friction, hydraulic damping, hydraulic compliance, mechanical compliance, steering ratio, and assist gain all affect how much is transmitted to the driver.

## Steering Linkage

CAUTION: Steering gear boots must be handled carefully to avoid damage. Use new clamps when installing steering gear boots.

Inspect the boots for cuts, deterioration, twisting or distortion. Check the steering gear boots to make sure they are tight. Install new boots or clamps as necessary.

• NOTE: The following steps must be carried out with assistance.

1. **1.** With the wheels in the straight ahead position, gently turn the steering wheel to the left and the right to check for free play.
2. **2.** Free play should be between 0 and 6 mm (0 and 0.24 in) at the steering wheel rim. If the free play exceeds this limit, either the

GETtheMANUALS.org

ball joints are worn, the lower steering column joints are worn or the backlash of the steering gear is excessive.

3. CAUTION: DO NOT attempt to adjust the steering gear yoke. Failure to follow this instruction will result in the steering gear warranty to become invalid.

   **3.** The backlash of the steering gear cannot be adjusted, install a new steering gear. For additional information, REFER to Section 211-02 Power Steering.

4. **4.** Grasp the steering wheel firmly and move it up and down and to the left and right without turning the wheel to check for column bearing wear, steering wheel or steering column. For additional information, REFER to Section 211-04 Steering Column.

GETtheMANUALS.org

# Steering System - General Information - Power Steering System Bleeding

General Procedures

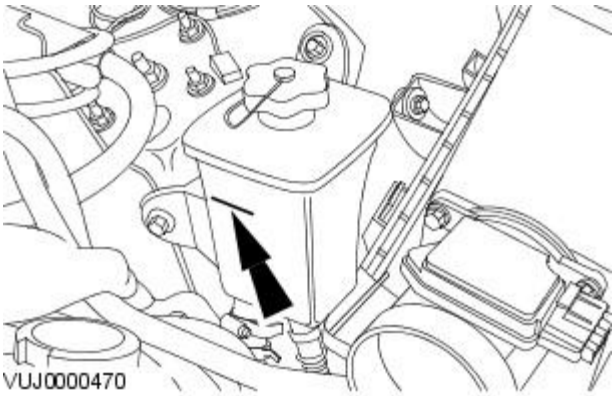


**1.** NOTE: When filling the reservoir, make sure that the fluid is clean and not agitated prior to use. The fluid should be poured slowly into the reservoir to minimize the possibility of aeration.

Fill the reservoir to the MAX mark.

**2.** NOTE: Do not start the engine.

Turn the steering from lock to lock.

**3.** Check the fluid level. Fill the reservoir to the MAX mark if necessary.

**4.** Start the engine and turn the steering from lock to lock.

**5.** Switch the engine off.

**6.** Check the fluid level. Fill the reservoir to the MAX mark if necessary.

**7.** Start the engine, turn the steering wheel from lock to lock. If excessive noise is apparent or shudder is evident through the steering wheel, repeat the bleed procedure.

GETtheMANUALS.org

# Steering System - General Information - Power Steering System Flushing

General Procedures

• NOTE: If heavy steering or contamination within the power steering system is found, it is necessary to carry out the system flush procedure as detailed below. If any components have been replaced in the power steering system the procedure below must be carried out in full.

• NOTE: Some variation in the illustrations may occur, but the essential information is always correct.

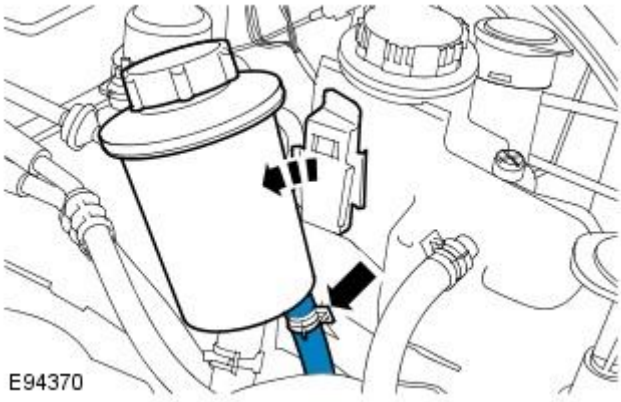


1. Remove the power steering fluid reservoir cap.
2. Using a suitable syringe, remove the power steering fluid from the power steering fluid reservoir.
3. CAUTION: Be prepared to collect escaping fluids.

• NOTE: Note the orientation of the clip.

Detach the power steering fluid reservoir.

- Detach but do not remove the power steering fluid reservoir.
- Release the power steering fluid return hose from the power steering fluid reservoir.
- If a quick release coupling is fitted to the power steering return hose, release the power steering fluid return hose from the coupling by removing the clip.

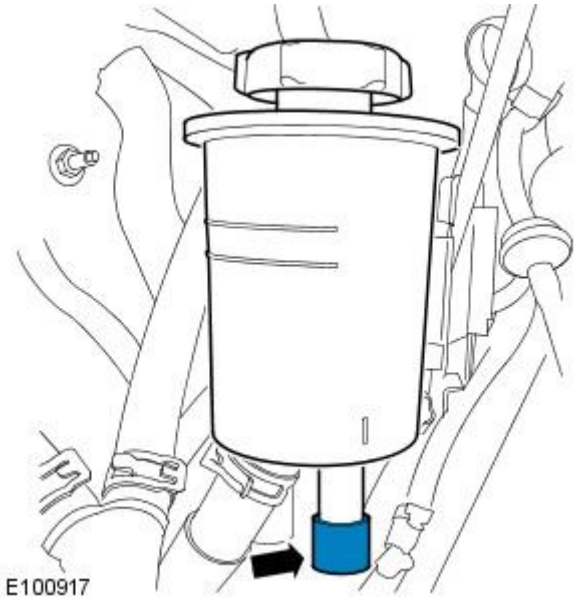


4. CAUTION: Be prepared to collect escaping fluids.

• NOTE: Make sure that all openings are sealed. Use new blanking caps.

Using a suitable blanking cap, cap the power steering reservoir return pipe.

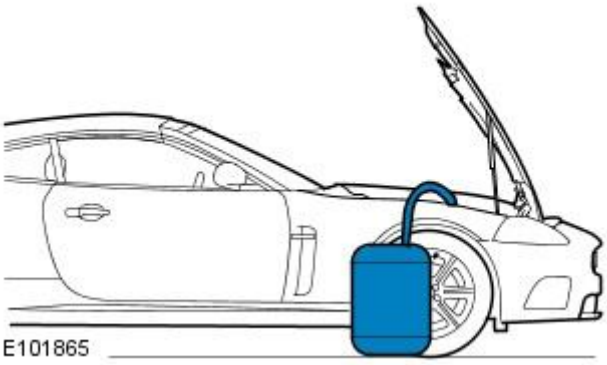


5. CAUTION: Be prepared to collect escaping fluids.

• NOTE: Make sure the extended pipe is not kinked or twisted and is correctly secured with hose clips.

Attach a suitable pipe to the power steering return hose to allow the fluid to drain.

GETtheMANUALS.org

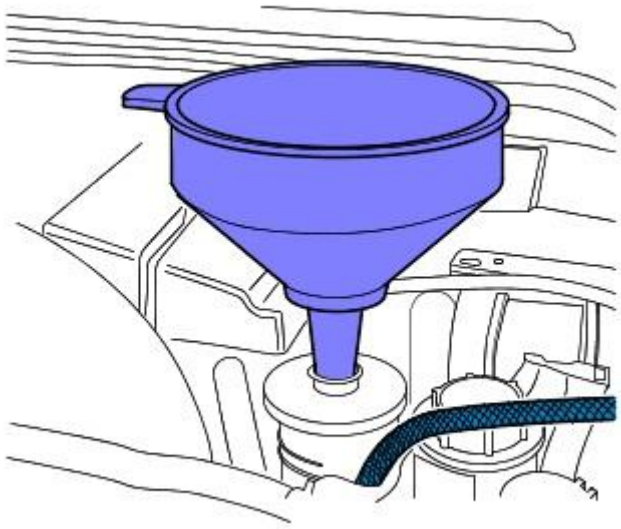

E94372

**6.** NOTE: The suitable funnel should have the a capacity of 4 litres and O-ring seal

• NOTE: The suitable funnel must be tightly sealed to the power steering fluid reservoir to avoid fluid leakage.

Install a suitable funnel onto the power steering fluid reservoir.

**7.** WARNING: Do not work on or under a vehicle supported only by a jack. Always support the vehicle on safety stands.

Raise and support the vehicle with the wheels just clear of the ground.

**8.** CAUTIONS:

Steps 8 and 9 must be carried out within 2 - 3 seconds of each other. Failure to follow this instruction may result in damage to the power steering system.

Be prepared to collect escaping fluids.

Using the suitable funnel, top up the power steering system with the specified fluid. Make sure the fluid level is maintained at two thirds full in the funnel.

**9.** CAUTIONS:

Be prepared to collect escaping fluids.

Do not allow the power steering fluid level in the power steering fluid reservoir to fall below the minimum power steering fluid level. Failure to follow this instruction may result in damage to the power steering system.

Make sure the engine is switched off as soon as the full 4 litres of power steering fluid has entered the power steering fluid reservoir.

Flush the power steering system.

- Start the engine
- With assistance turn the steering slowly lock to lock 3 times at approximately 1 revolution every 5 seconds.
- Continue to flush the power steering system until 4 litres of power steering fluid has been added to the power steering reservoir. This should take approximately 30 seconds.

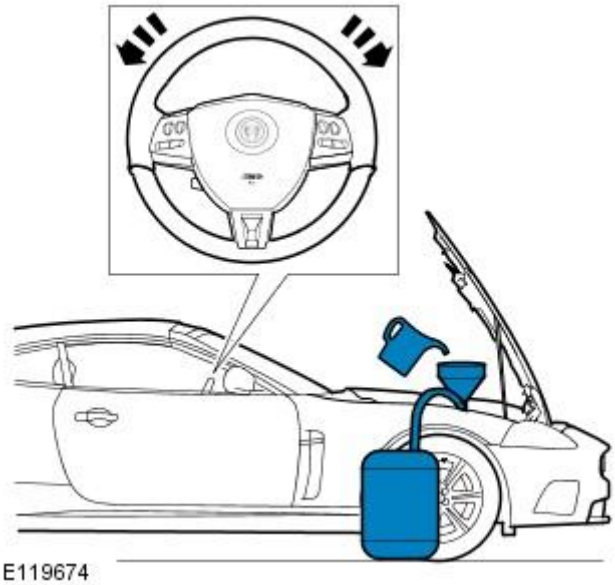

E119674

GETtheMANUALS.org

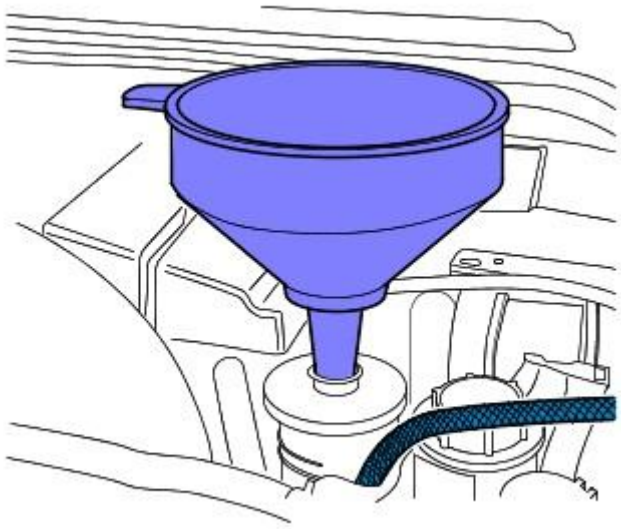

E94372

**10.** CAUTION: Be prepared to collect escaping fluids.

Remove the suitable funnel.

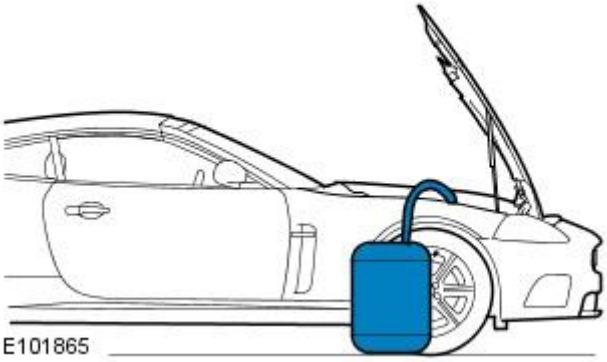

E101865

**11.** CAUTION: Be prepared to collect escaping fluids.

Remove the suitable pipe to the power steering return hose.

**12.** CAUTION: Be prepared to collect escaping fluids.

- NOTE: Note the orientation of the clip.

If a quick release coupling is fitted to the power steering return hose, connect the power steering fluid return hose to the coupling by installing the clip.

**13.** Install a new power steering fluid reservoir. For additional information, refer to: (211-02)

Power Steering Fluid Reservoir - 4.2L/3.0L/2.7L Diesel (Removal and Installation),
Power Steering Fluid Reservoir - 3.0L Diesel (Removal and Installation).

GETtheMANUALS.org

# Power Steering -

| Description | Nm | lb-ft | lb-in |
|---|---|---|---|
| Lower steering column slider pinch bolt | 35 | 26 | - |
| Lower steering column to steering gear pinch bolt | 35 | 26 | - |
| Power steering control valve actuator | 2 | - | 18 |
| Power steering fluid cooler retaining bolts | 7 | - | 62 |
| Power steering pump pulley retaining bolts | 20 | 15 | - |
| Power steering pump retaining bolts - All except vehicles with diesel engine | 25 | 18 | - |
| Power steering pump retaining bolts - Vehicles with diesel engine | 22 | 16 | - |
| Power steering pump to steering gear pressure line | 25 | 18 | - |
| Steering gear retaining bolts | 100 | 74 | - |
| Steering gear supply and return lines | 10 | - | 89 |

GETtheMANUALS.org

# Power Steering - Power Steering

Description and Operation

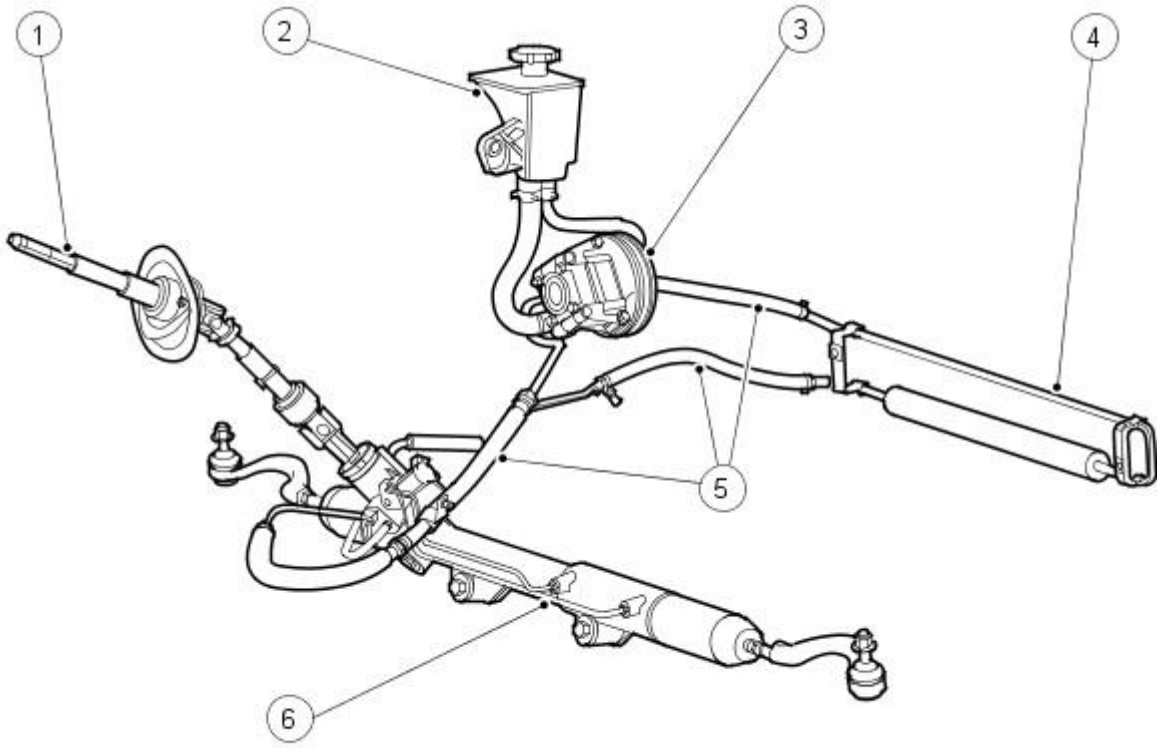


E30165

| Item | Part Number | Description |
|---|---|---|
| 1 | — | Lower steering column |
| 2 | — | Power steering fluid reservoir |
| 3 | — | Power steering pump |
| 4 | — | Power steering fluid cooler |
| 5 | — | Power steering lines |
| 6 | — | Steering gear |

The vehicle uses a rack and pinion type, variable ratio steering gear with speed proportional servotronic. The power steering pump is belt driven on all model variants and the power steering oil cooler is of a tube and fin type and is mounted to the front of the cooling pack.

A variable steering rack ratio reduces the amount of turns from lock to lock to improve parking maneuvers without loosing any steering feel at higher speeds.

The steering assistance decreases smoothly at a calibrated rate to increase the steering efforts required as vehicle speed increases. The steering efforts are controlled by the actuator position, which in turn is controlled electronically by the speed proportional servotronic curve which is incorporated within the Generic Electronic Module (GEM).

Absolute cleanliness must be observed when replenishing the fluid or dismantling any part of the system. New fluid from a sealed container must be used.

• NOTE: If the steering gear, pump or cooler are being replaced for leakage or noise related issues and there is no evidence of fluid contamination, there is no need to replace the reservoir.

In some cases where the fluid clearly contains particulate matter, and the system continues to function, flush the system with fresh fluid and replace the reservoir, as there is the possibility that the reservoir internal filter may be damaged or faulty.

GETtheMANUALS.org

Published: 11-May-2011

# Power Steering - Power Steering

Diagnosis and Testing

For additional information, refer toSection 211-00 Steering System - General Information.

GETtheMANUALS.org

# Power Steering - Power Steering Control Valve ActuatorVehicles Built From: 02/2004

Removal and Installation

## Removal

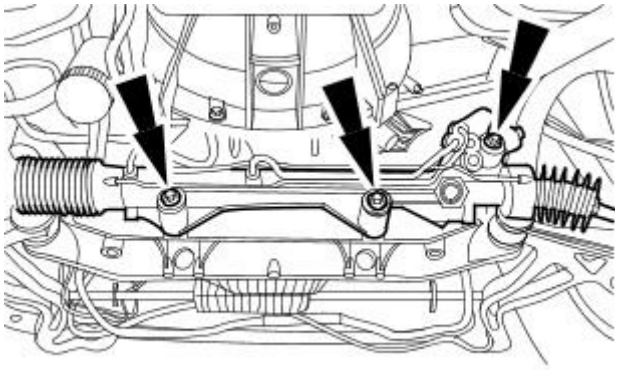

VUJ0002963

1. Remove the air deflector.
   For additional information, refer to: Air Deflector (501-02 Front End Body Panels, Removal and Installation).
2. Detach the steering gear.

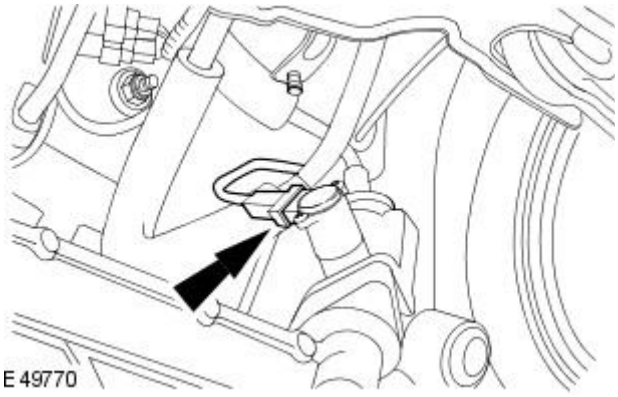

E49770

3. Disconnect the power steering control valve actuator electrical connector.

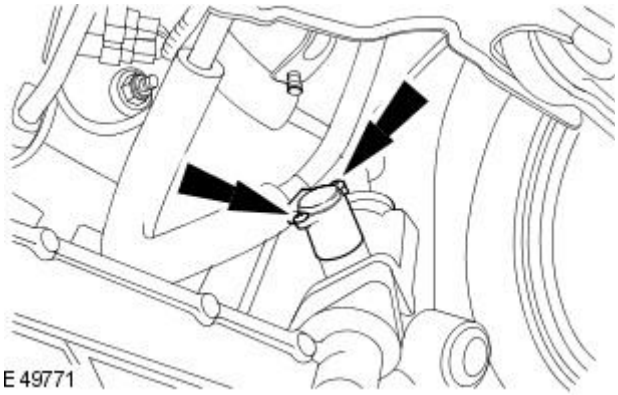

E49771

4. Remove the power steering control valve actuator.
   - Drain the fluid into a suitable container.
   - Remove and discard the O-ring seals and filter.

## Installation

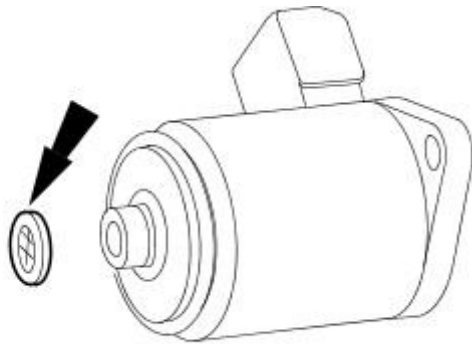

VUJ0002966

1. To install, reverse the removal procedure.
   - Install new O-ring seals and filter.

GETtheMANUALS.org

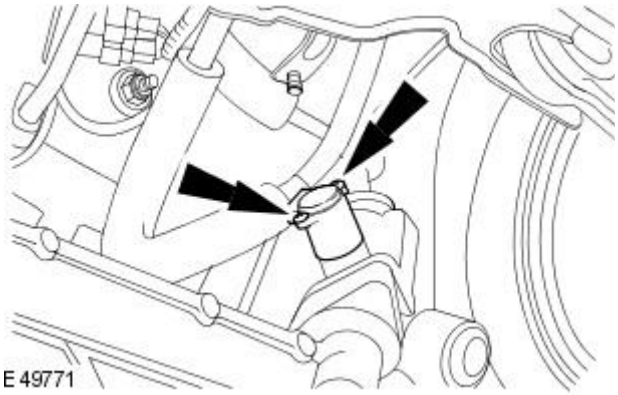


**2.** CAUTION: Make sure both the retaining bolts are tightened an even number of turns.

Tighten to 3 Nm.

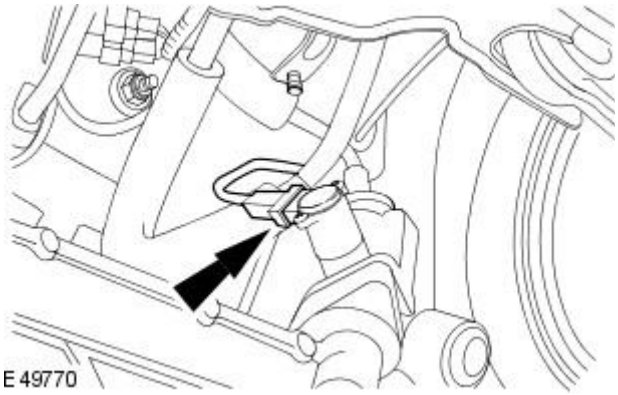


**3.** Connect the power steering control valve actuator electrical connector.

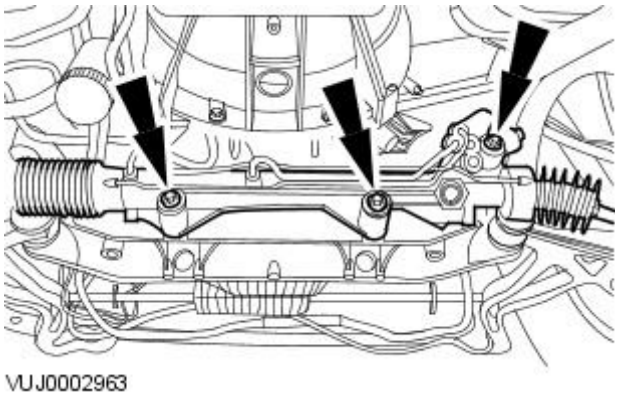


**4.** Tighten to 100 Nm.

**5.** Install the air deflector.
For additional information, refer to: Air Deflector (501-02 Front End Body Panels, Removal and Installation).

**6.** Bleed the power steering system.
For additional information, refer to: Power Steering System Bleeding (211-00 Steering System - General Information, General Procedures).

GETtheMANUALS.org

# Power Steering - Power Steering Control Valve ActuatorVehicles Built Up To: 01/2004

Removal and Installation

## Removal

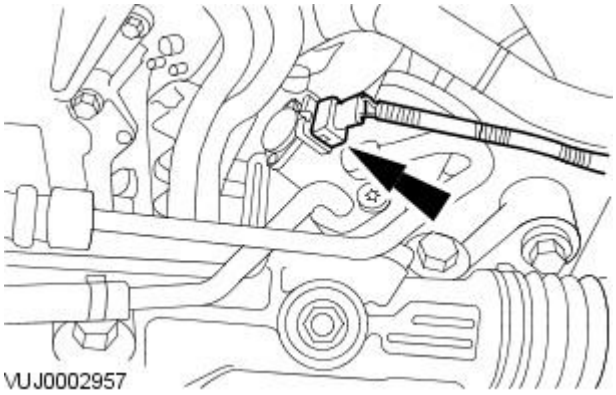


1. Remove the air deflector.
   For additional information, refer to Section 501-02 Front End Body Panels.
2. Disconnect the actuator electrical connector.

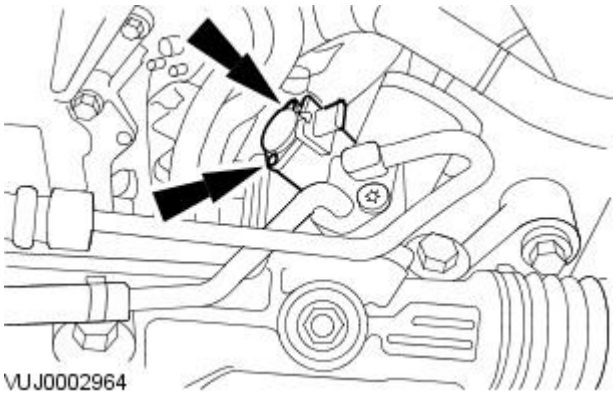


3. Remove the actuator.
   - Drain the fluid into a suitable container.
   - Remove and discard the O-ring seals and filter.

## Installation

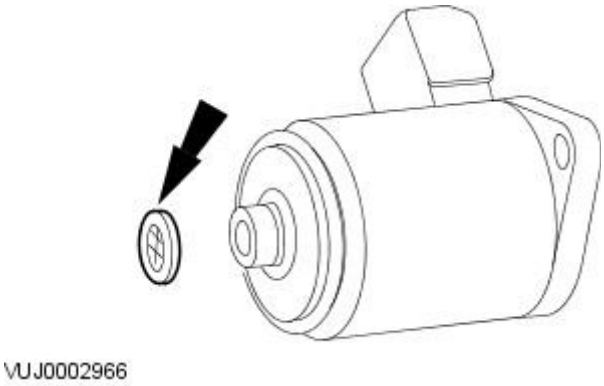


1. To install, reverse the removal procedure.
   - Install new O-ring seals and filter.

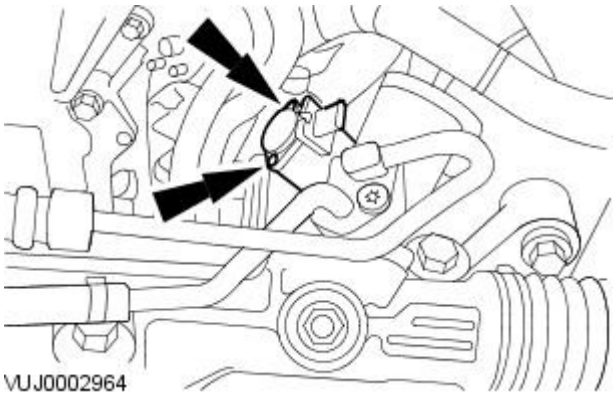


2. CAUTION: Make sure both the retaining bolts are tightened an even number of turns.

   Tighten to 3 Nm.

3. Install the air deflector.
   For additional information, refer to Section 501-02 Front End Body Panels.
4. Bleed the power steering system.
   For additional information, refer to Section 211-00 Steering System -

GETtheMANUALS.org

# Power Steering - Power Steering Fluid CoolerV8 4.2L Petrol / V8 S/C 4.2L Petrol / 2.5L NA V6 - AJV6 / 3.0L NA V6 - AJ27

Removal and Installation

## Removal

All vehicles

**1.** Remove the Front Bumper Cover. For additional information, refer to: (501-19 Bumpers)

Front Bumper Cover Insert - Vehicles Built From: 02/2004 (Removal and Installation),
Front Bumper Cover Insert - Vehicles Built Up To: 01/2004 (Removal and Installation).

**2.** Remove the lower cowl.

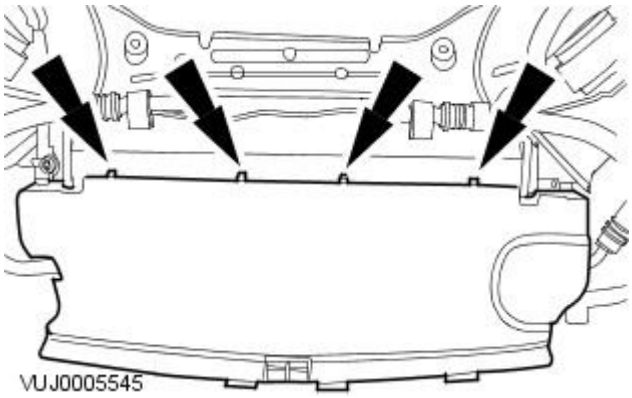


**3.** Reposition the splash shield.

- Remove the splash shield retaining clip.

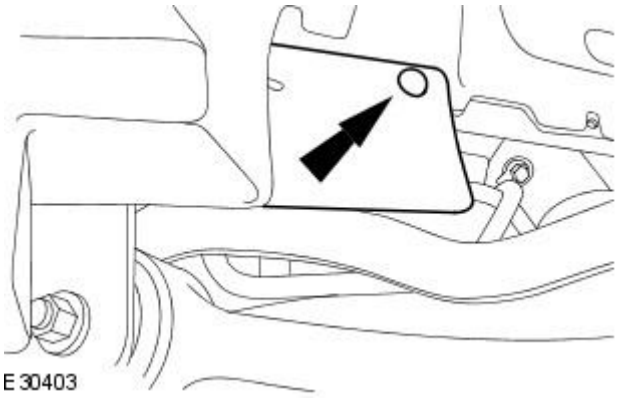


**4.** CAUTIONS:

If power steering fluid comes into contact with the paintwork, the effected area must be immediately washed down with cold water.

Cap the power steering line to prevent loss of fluid and dirt ingress.

Disconnect the power steering fluid cooler line.

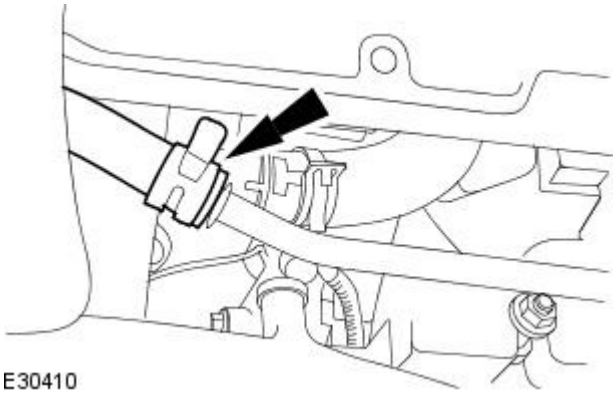


Vehicles with supercharger

GETtheMANUALS.org

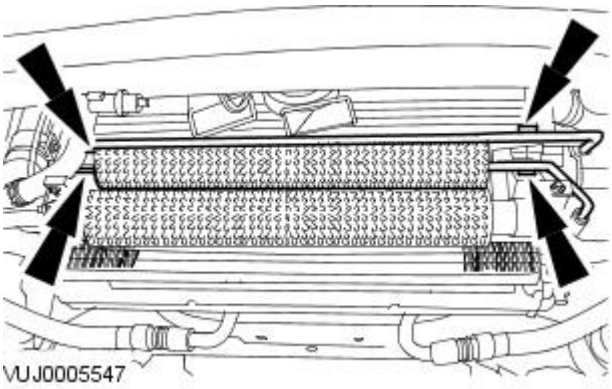


**5.** Remove power steering fluid cooler.

Vehicles without supercharger

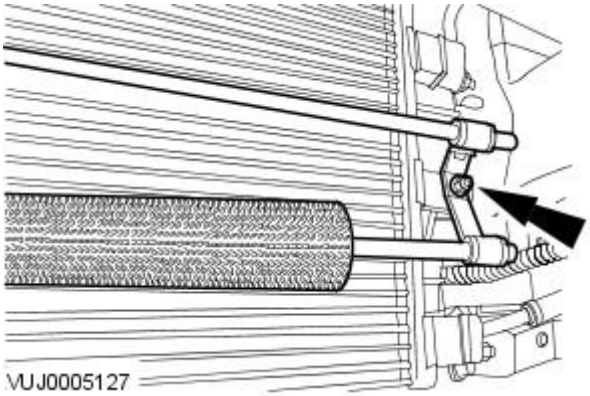


**6.** NOTE: Left-hand shown, right-hand similar.

Remove power steering fluid cooler.

## Installation

**1.** To install, reverse the removal procedure.

**2.** Tighten to 7 Nm.

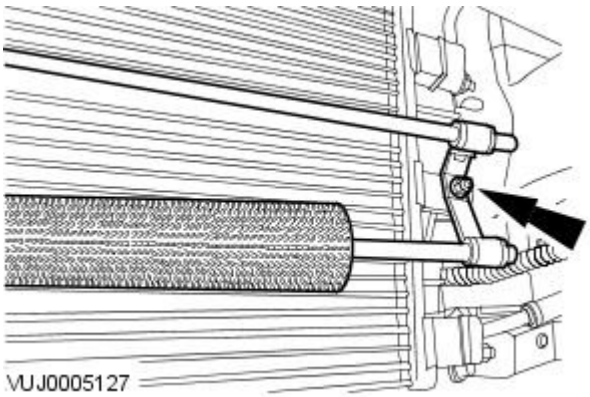


**3.** NOTE: If the cooler is being replaced for leakage or noise related issues and there is no evidence of fluid contamination, there is no need to replace the reservoir.

In some cases where the fluid clearly contains particulate matter, and the system continues to function, flush the system with fresh fluid and replace the reservoir, as there is the possibility that the reservoir internal filter may be damaged or faulty.

GETtheMANUALS.org

# Power Steering - Power Steering Fluid Cooler2.7L V6 - TdV6

Removal and Installation

## Removal

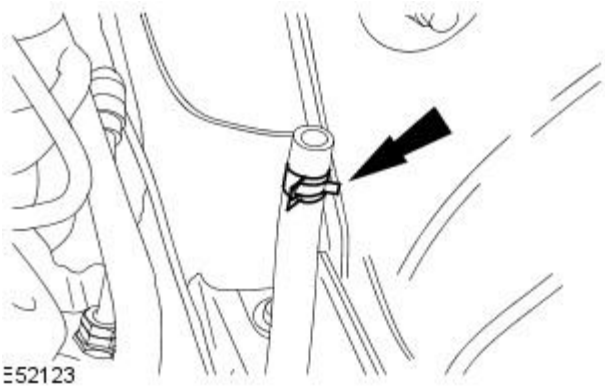


**1.** Remove the retaining clip.

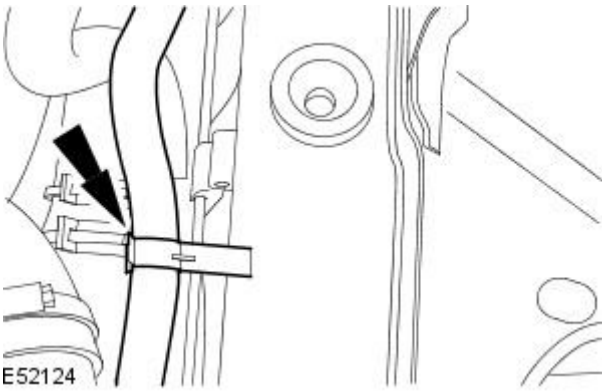


**2.** Detach the power steering fluid cooler hose.

**3.** Remove the radiator splash shield.
For additional information, refer to: Radiator Splash Shield (501-02 Front End Body Panels, Removal and Installation).

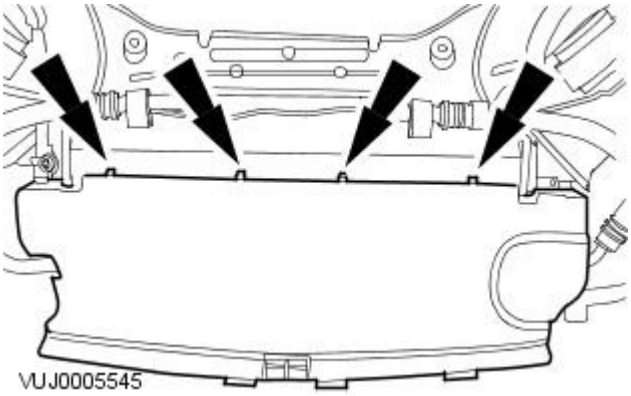


**4.** Remove the lower cowl.

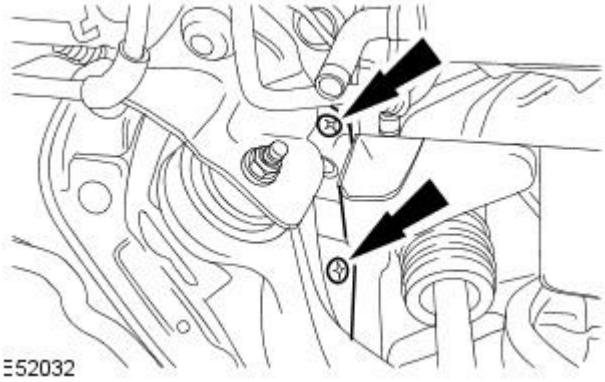


**5.** Remove the splash shield.

GETtheMANUALS.org

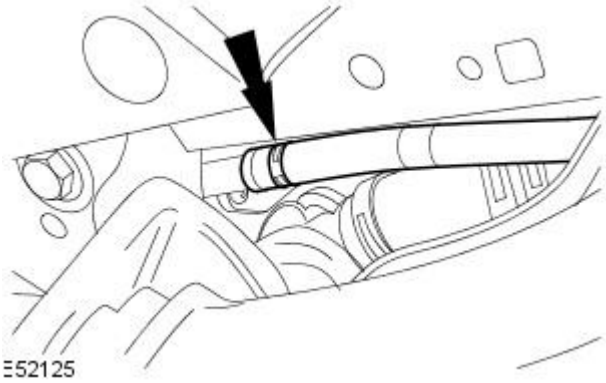


**6.** CAUTIONS:

If power steering fluid is spilt on the paintwork, the effected area must be immediately washed down with cold water. Failure to follow this instruction may result in damage to the vehicle.

To prevent dirt ingress into the power steering system, make sure suitable plugs are fitted to the power steering pump ports, feed hoses and pipes whenever they are disconnected. Failure to follow this instruction may result in damage to the vehicle.

Disconnect the power steering fluid cooler line.

- Allow the power steering fluid to drain into a suitable container.

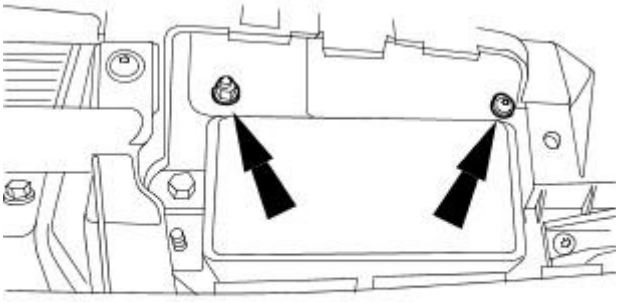


**7.** NOTE: Support the speed control module using tie straps.

Detach the speed control module.

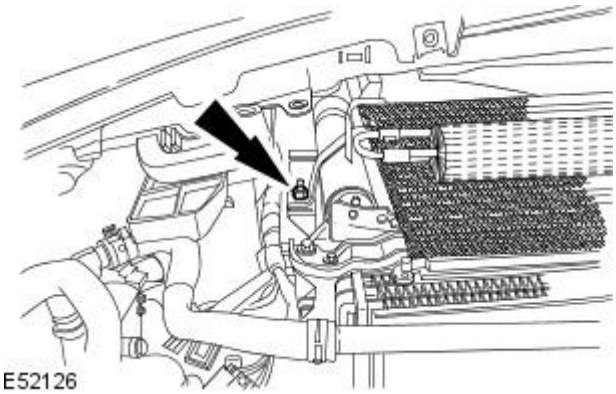


**8.** Remove the retaining nut.

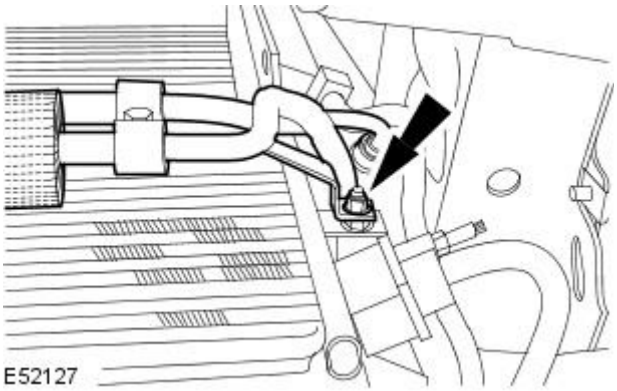


**9.** CAUTION: Make sure the power steering fluid cooler hose does not damage the radiator foam surround during the power steering fluid cooler removal. Failure to follow this instruction may result in damage to the vehicle.

Remove power steering fluid cooler.

## Installation

GETtheMANUALS.org

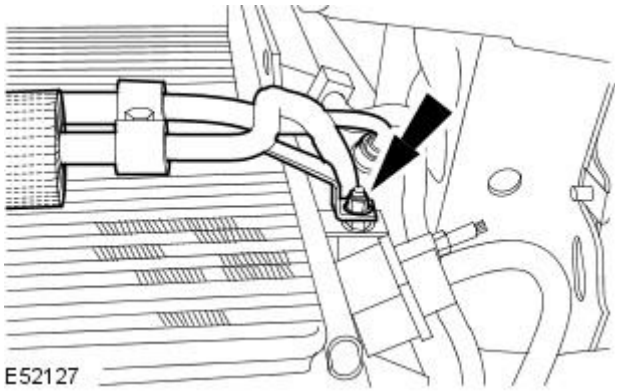


**1.** CAUTION: Make sure the power steering fluid cooler hose does not damage the radiator foam surround during the power steering fluid cooler Installation. Failure to follow this instruction may result in damage to the vehicle.

To install, reverse the removal procedure.

- Tighten to 7 Nm.

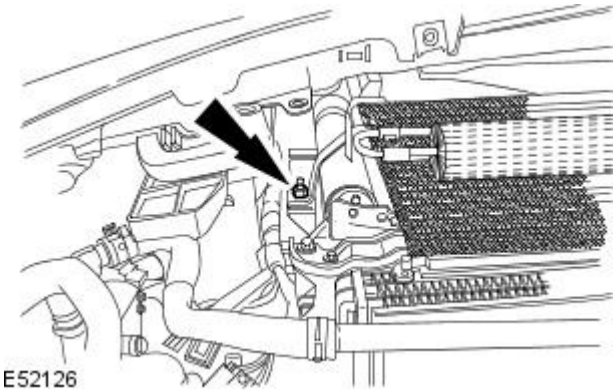


**2.** Tighten to 7 Nm.

**3.** NOTE: If the cooler is being replaced for leakage or noise related issues and there is no evidence of fluid contamination, there is no need to replace the reservoir.

In some cases where the fluid clearly contains particulate matter, and the system continues to function, flush the system with fresh fluid and replace the reservoir, as there is the possibility that the reservoir internal filter may be damaged or faulty.

GETtheMANUALS.org

# Power Steering - Power Steering Fluid Reservoir

Removal and Installation

## Removal

All except vehicles with diesel engine

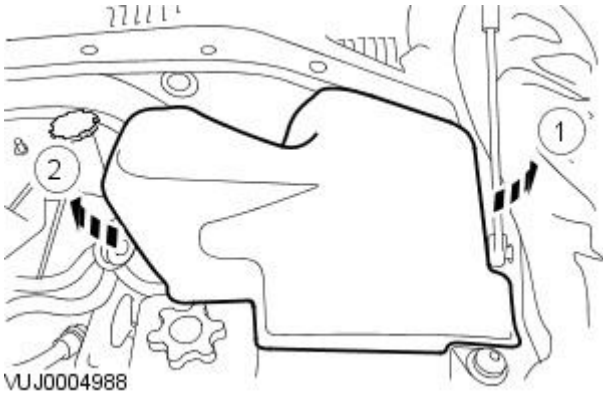


**1.** Remove the suspension turret trim panel.

1. Detach the suspension turret trim panel.
2. Remove the suspension turret trim panel.

Vehicles with diesel engine

**2.** Remove the air cleaner.
For additional information, refer to: Air Cleaner (303-12C Intake Air Distribution and Filtering - 2.7L V6 - TdV6, Removal and Installation).

All vehicles

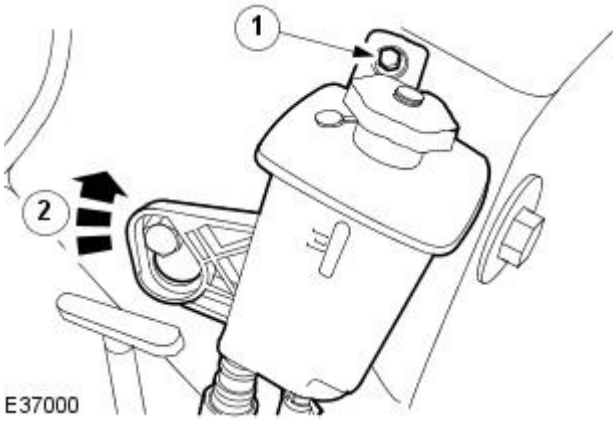


**3.** CAUTIONS:

If power steering fluid is spilt on the paintwork, the effected area must be immediately washed down with cold water. Failure to follow this instruction may result in damage to the vehicle.

To prevent dirt ingress into the power steering system, make sure suitable plugs are fitted to the power steering pump ports, feed hoses and pipes whenever they are disconnected. Failure to follow this instruction may result in damage to the vehicle.

Detach the power steering reservoir.

1. Remove the power steering reservoir retaining bolt.
2. Detach the power steering reservoir.

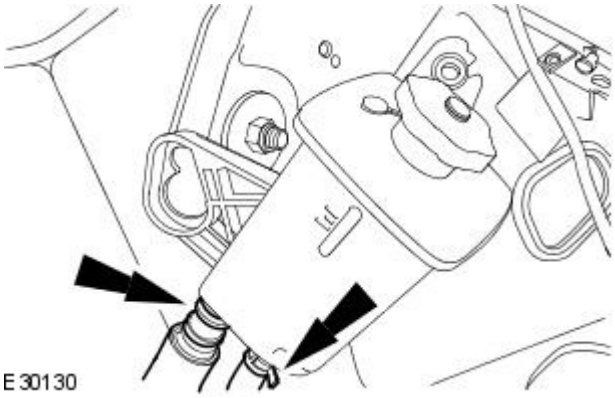


**4.** CAUTIONS:

If power steering fluid is spilt on the paintwork, the effected area must be immediately washed down with cold water. Failure to follow this instruction may result in damage to the vehicle.

To prevent dirt ingress into the power steering system, make sure suitable plugs are fitted to the power steering pump ports, feed hoses and pipes whenever they are disconnected. Failure to follow this instruction may result in damage to the vehicle.

Remove the power steering fluid reservoir.

- NOTE: Drain fluid into a suitable container.

- Detach the power steering fluid reservoir hoses.

## Installation

**1.** To install, reverse the removal procedure.

**2.** Bleed the power steering system.
For additional information, refer to: Power Steering System Bleeding (211-00 Steering System - General Information, General Procedures).

GETtheMANUALS.org

# Power Steering - Power Steering Pump2.5L NA V6 - AJV6 / 3.0L NA V6 - AJ27

Removal and Installation

## Removal

1. Remove the accessory drive belt.
   For additional information, refer to: Accessory Drive Belt - 2.5L NA V6 - AJV6/3.0L NA V6 - AJ27 (303-05 Accessory Drive, Removal and Installation).
2. Remove the air cleaner.
   For additional information, refer to: Air Cleaner (303-12A Intake Air Distribution and Filtering - 2.5L NA V6 - AJV6/3.0L NA V6 - AJ27, Removal and Installation).
3. Remove the left-hand front wheel and tire.
   For additional information, refer to: Wheel and Tire (204-04 Wheels and Tires, Removal and Installation).
4. Remove the air deflector.

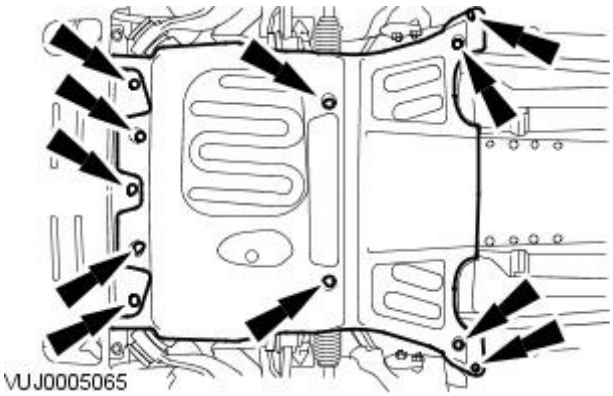


5. Reposition the splash shield.
   - Remove the splash shield retaining clip.

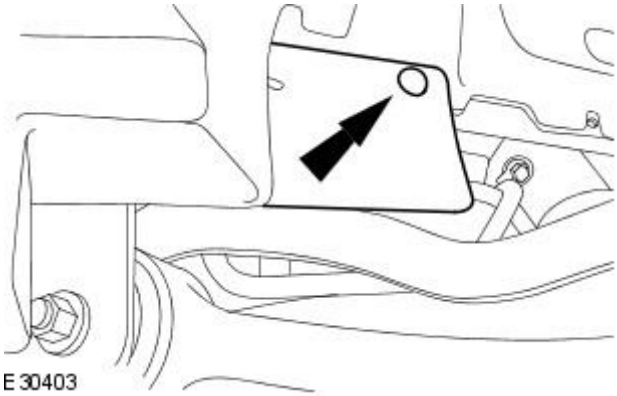


6. Remove the power steering pump lower retaining bolts.

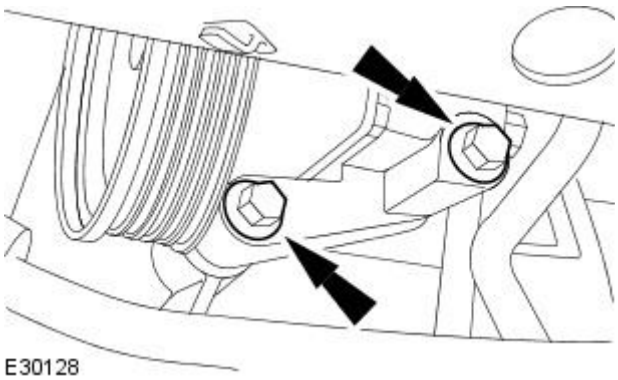


7. Lower the vehicle.

GETtheMANUALS.org

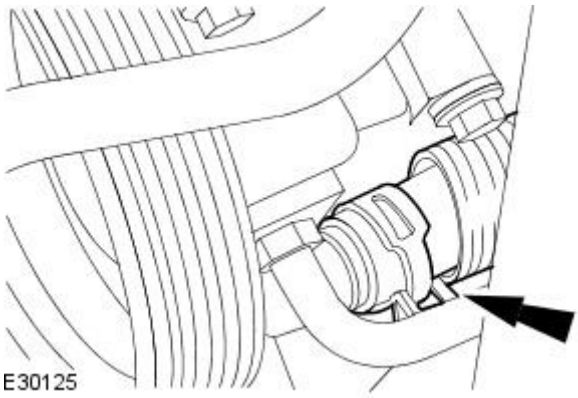


**8.** CAUTIONS:

Cap the power steering line to prevent loses of fluid and dirt ingress.

If power steering fluid comes into contact with the paintwork, the affected area must be immediately washed down with cold water.

• NOTE: Drain the fluid into a suitable container.

Disconnect the power steering reservoir to power steering pump supply line.

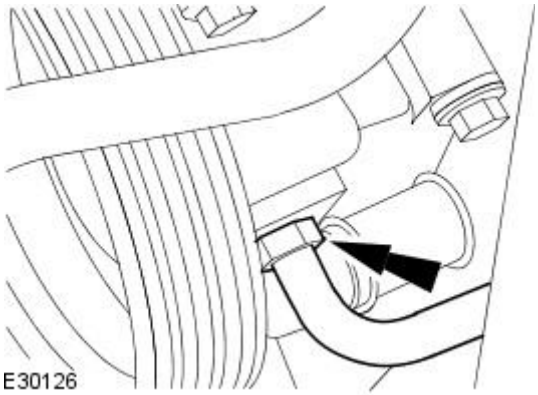


**9.** CAUTIONS:

Cap the power steering lines to prevent loses of fluid and dirt ingress.

If power steering fluid comes into contact with the paintwork, the affected area must be immediately washed down with cold water.

• NOTE: Drain the fluid into a suitable container.

Disconnect the power steering pump to steering gear suppy line.

- Remove and discard the O-ring seal.

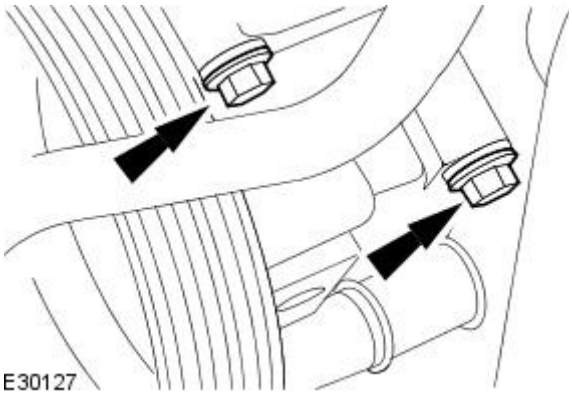


**10.** Remove the power steering pump.

## Installation

**1.** NOTE: Install a new O-ring seal.

To install, reverse the removal procedure.

**2.** Tighten to 25 Nm.

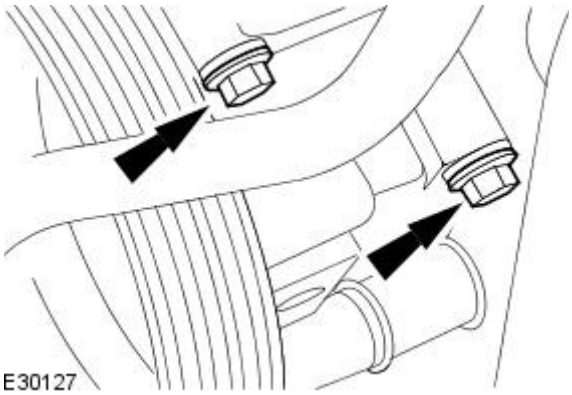


GETtheMANUALS.org

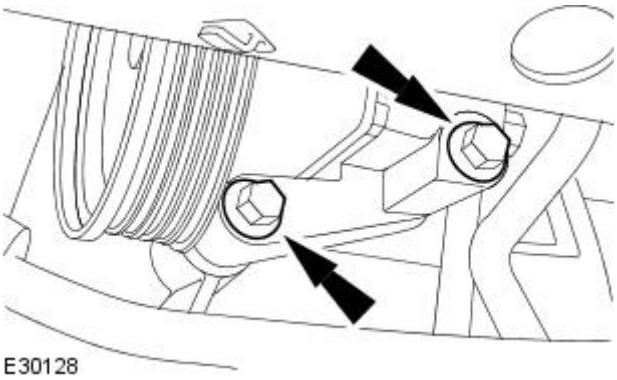


**3.** Tighten to 25 Nm.

**4.** NOTE: If the steering pump is being replaced for leakage or noise related issues and there is no evidence of fluid contamination, there is no need to replace the reservoir.

In some cases where the fluid clearly contains particulate matter, and the system continues to function, flush the system with fresh fluid and replace the reservoir, as there is the possibility that the reservoir internal filter may be damaged or faulty.

GETtheMANUALS.org

# Power Steering - Power Steering Pump2.7L V6 - TdV6

Removal and Installation

| Special Tool(s) | |
|---|---|
| 303-703 | Accessory belt detensioner.<br><br>303-703 |

## Removal

1. Remove the air cleaner assembly.
   For additional information, refer to: Air Cleaner (303-12C Intake Air Distribution and Filtering - 2.7L V6 - TdV6, Removal and Installation).
2. Remove the air deflector.
   For additional information, refer to: Air Deflector (501-02 Front End Body Panels, Removal and Installation).
3. Detach the accessory drive belt.
   1. Using the special tool, rotate the accessory drive belt tensioner counter clockwise.
   2. Detach the accessory drive belt.

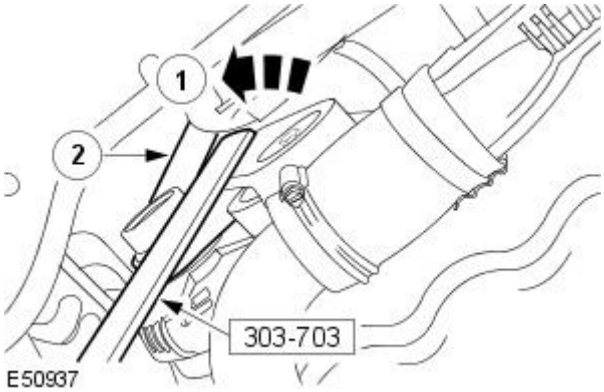


4. Lower the vehicle.
5. Remove the hose.

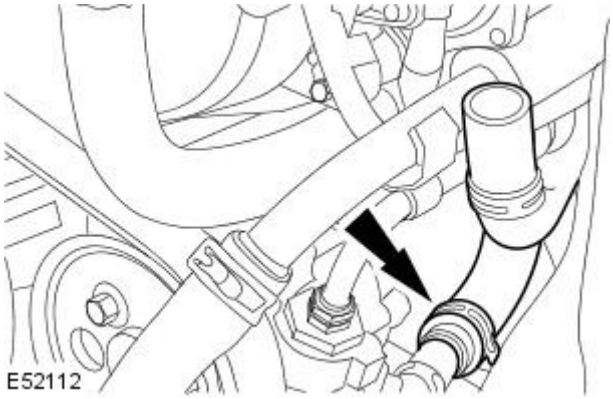


6. Remove the retaining clip.

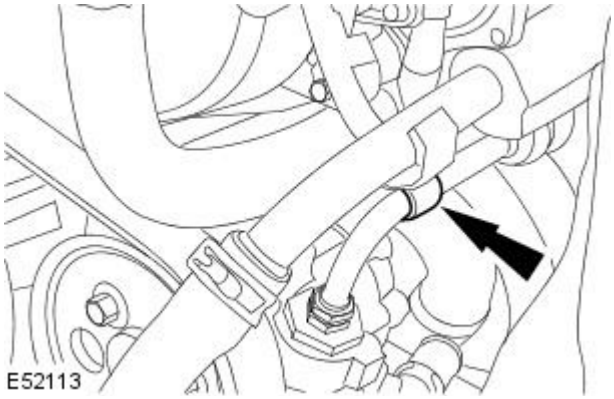


GETtheMANUALS.org

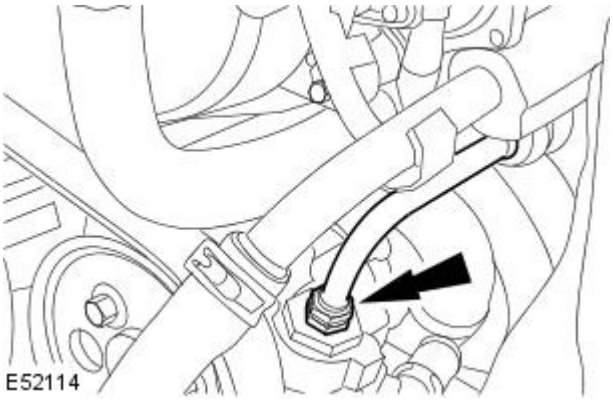


**7.** CAUTIONS:

Cap the power steering lines to prevent loss of fluid and dirt ingress. Failure to follow this instruction may result in damage to the components.

If power steering fluid comes into contact with the paintwork, the affected area must be immediately washed down with cold water. Failure to follow this instruction may result in damage to the vehicle.

• NOTE: Drain the fluid into a suitable container.

Disconnect the power steering pump to steering gear pressure line.

- Remove and discard the O-ring seal.

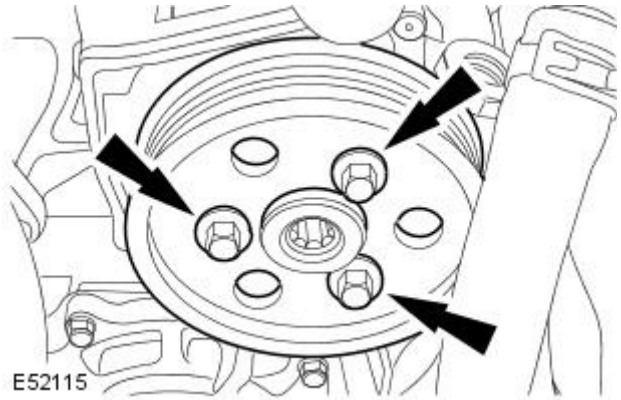


**8.** Remove the power steering pump pulley.

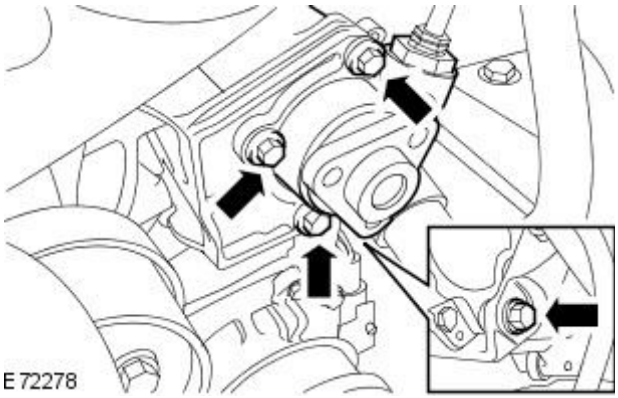


**9.** Remove the power steering pump.

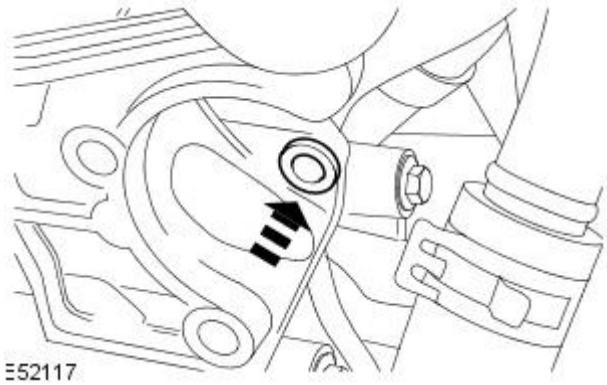


**10.** Reposition the spacer.

## Installation

GETtheMANUALS.org

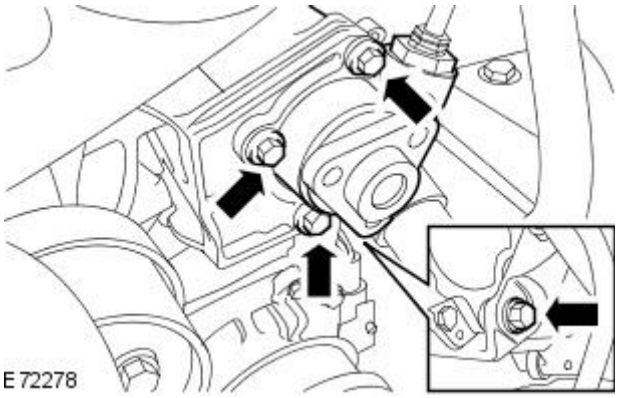


**1.** To install, reverse the removal procedure.

- Tighten to 22 Nm.

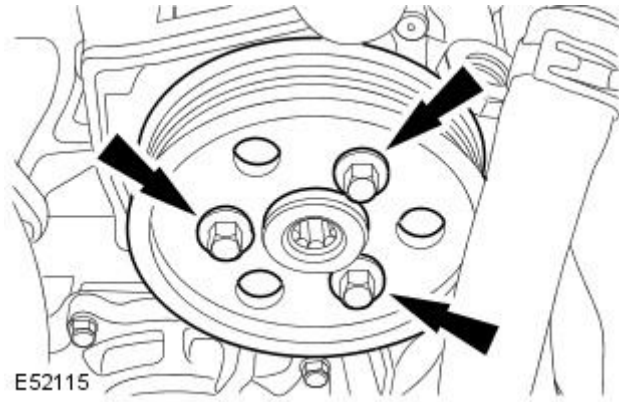


**2.** Tighten to 20 Nm.

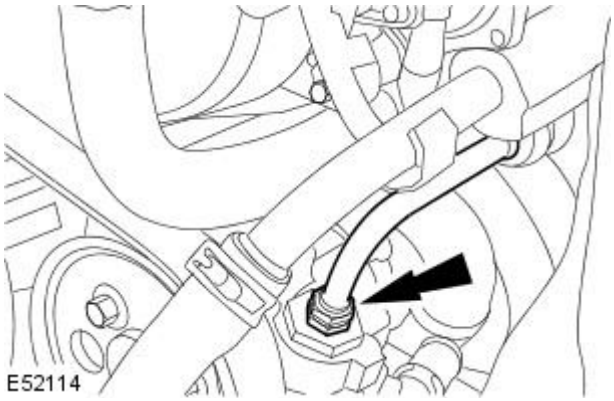


**3.** NOTE: Align the power steering pump to steering gear pressure line before tightening.

Tighten to 25 Nm.

- Install new O-ring seal.

**4.** NOTE: If the steering pump is being replaced for leakage or noise related issues and there is no evidence of fluid contamination, there is no need to replace the reservoir.

In some cases where the fluid clearly contains particulate matter, and the system continues to function, flush the system with fresh fluid and replace the reservoir, as there is the possibility that the reservoir internal filter may be damaged or faulty.

GETtheMANUALS.org

# Power Steering - Power Steering Pump2.7L V6 - TdV6

Removal and Installation

| Special Tool(s) | |
|---|---|
| 303-703 | Accessory Belt Detensioner<br><br>303-703 |

## Removal

1. Remove the air cleaner assembly.
   For additional information, refer to: Air Cleaner (303-12C Intake Air Distribution and Filtering - 2.7L V6 - TdV6, Removal and Installation).
2. Remove the air deflector.
   For additional information, refer to: Air Deflector (501-02 Front End Body Panels, Removal and Installation).
3. Detach the accessory drive belt.
   1. Using the special tool, rotate the accessory drive belt tensioner counter clockwise.
   2. Detach the accessory drive belt.

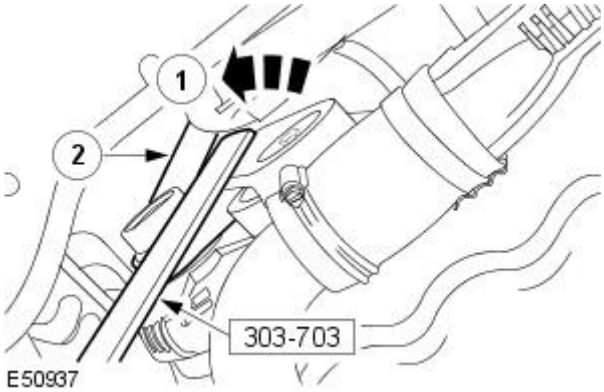


4. Lower the vehicle.
5. Detach the accessory drive belt from the power steering pump pulley.

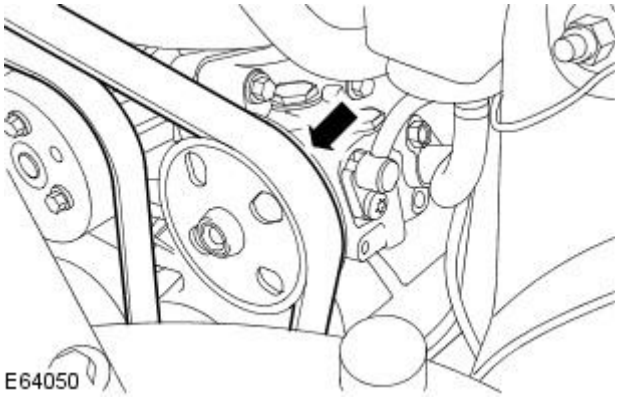


6. CAUTIONS:

Cap the power steering lines to prevent loss of fluid and dirt ingress.

If power steering fluid comes into contact with the paintwork, the affected area must be immediately washed down with cold water.

Disconnect the power steering pump to steering gear pressure line.

- Remove and discard the O-ring seal.

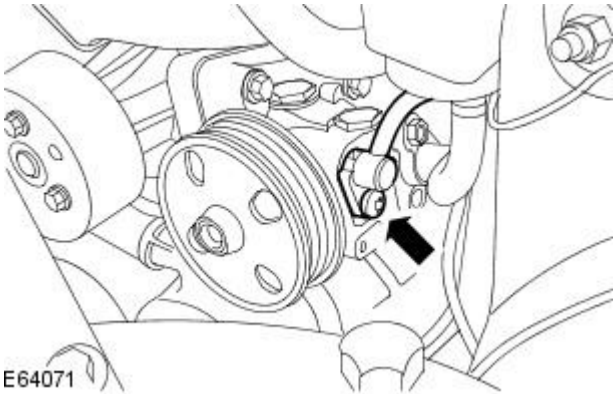


GETtheMANUALS.org

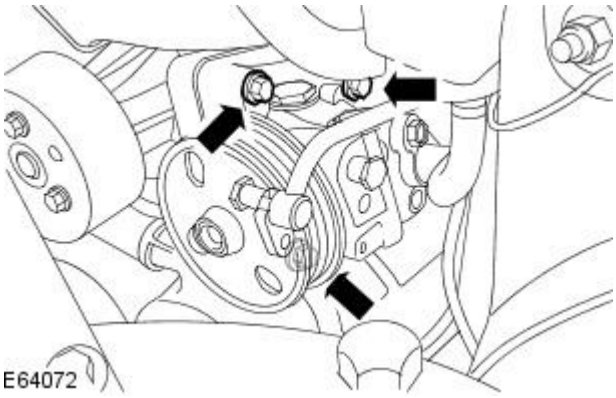


**7.** Remove the power steering pump retaining bolts.

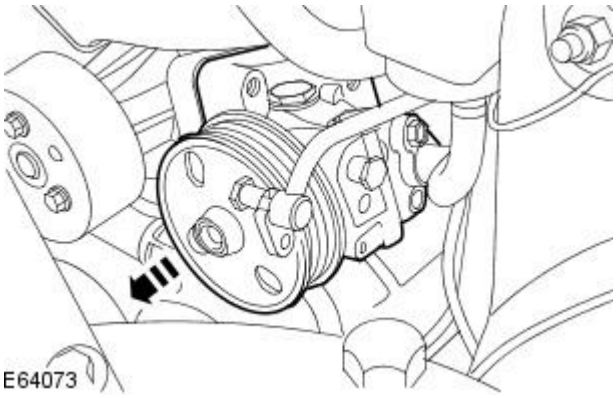


**8.** Reposition the power steering pump forwards.

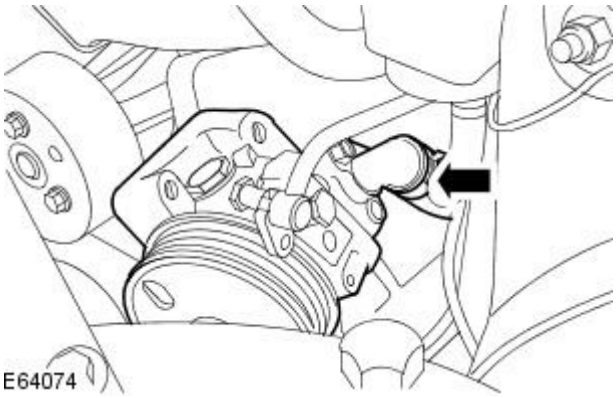


**9.** CAUTIONS:

Cap the power steering lines to prevent loss of fluid and dirt ingress.

If power steering fluid comes into contact with the paintwork, the affected area must be immediately washed down with cold water.

Remove the power steering pump.

- Detach the hose.

## Installation

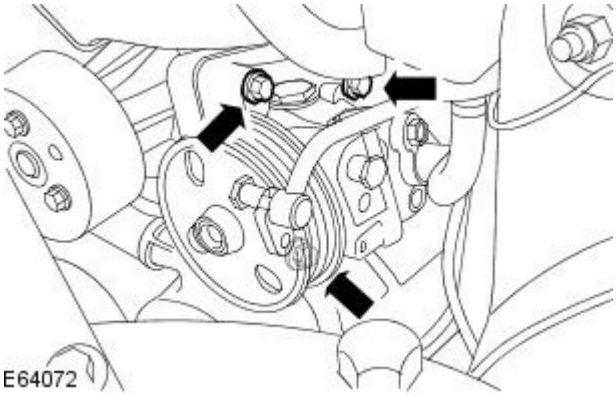


**1.** To install, reverse the removal procedure.

- Tighten to 22 Nm.

GETtheMANUALS.org

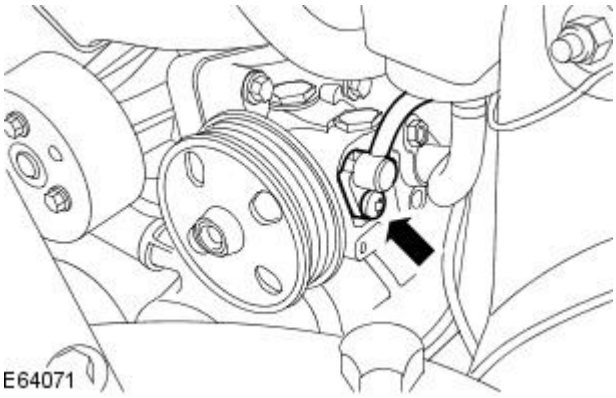


**2.** Tighten to 22 Nm.

- Install new O-ring seal.
- Lubricate the new O-ring seal with power steering fluid.

**3.** NOTE: If the pump is being replaced for leakage or noise related issues and there is no evidence of fluid contamination, there is no need to replace the reservoir.

In some cases where the fluid clearly contains particulate matter, and the system continues to function, flush the system with fresh fluid and replace the reservoir, as there is the possibility that the reservoir internal filter may be damaged or faulty.

GETtheMANUALS.org

# Power Steering - Power Steering PumpV8 4.2L Petrol/V8 S/C 4.2L Petrol

Removal and Installation

| Special Tool(s) | |
|---|---|
| 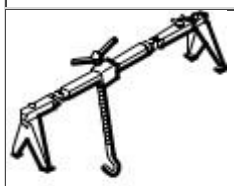 303-021 | Engine support beam.<br><br>303021 |
| 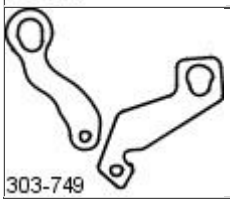 303-749 | Engine lifting brackets<br><br>303749 |

## Removal

All vehicles

1. Remove the left-hand front wheel and tire.
   For additional information, refer to: Wheel and Tire (204-04 Wheels and Tires, Removal and Installation).
2. Remove the air deflector.
   For additional information, refer to: Air Deflector (501-02 Front End Body Panels, Removal and Installation).
3. Remove the left-hand engine mount retaining nut.

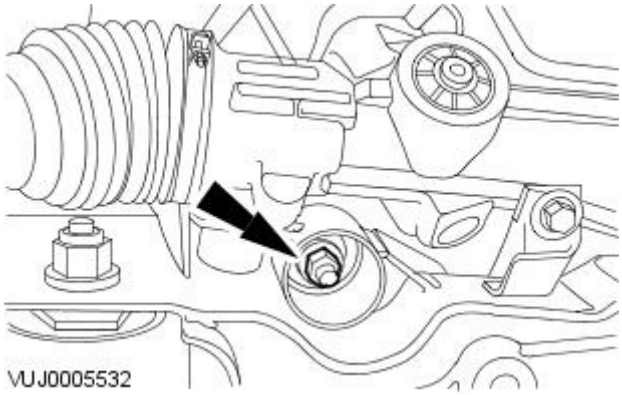


4. Reposition the splash shield.
   - Remove the splash shield retaining clip.

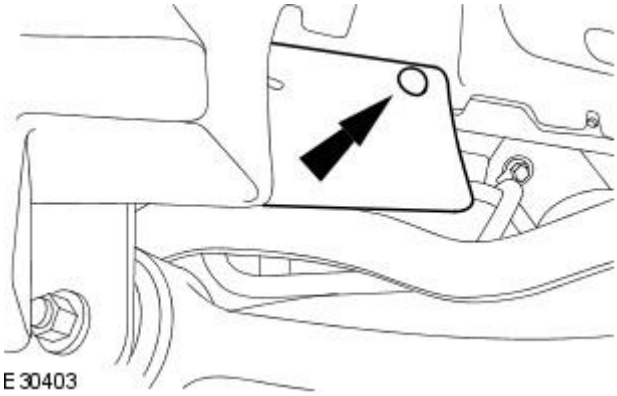


5. CAUTIONS:

Cap the power steering line to prevent loss of fluid and dirt ingress.

If power steering fluid comes into contact with the paintwork, the affected area must be immediately washed down with cold water.

• NOTE: Drain the fluid into a suitable container.

Disconnect the power steering reservoir to power steering pump supply line.

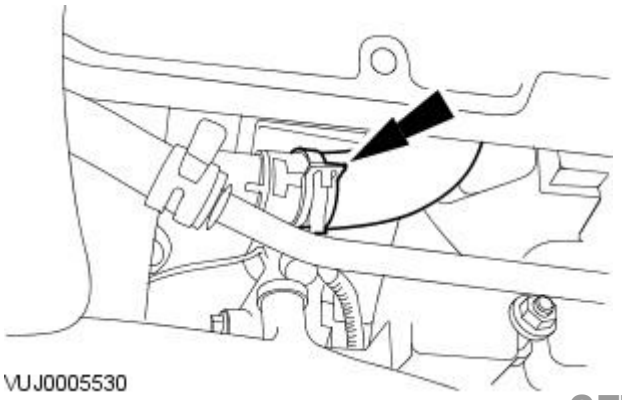


GETtheMANUALS.org

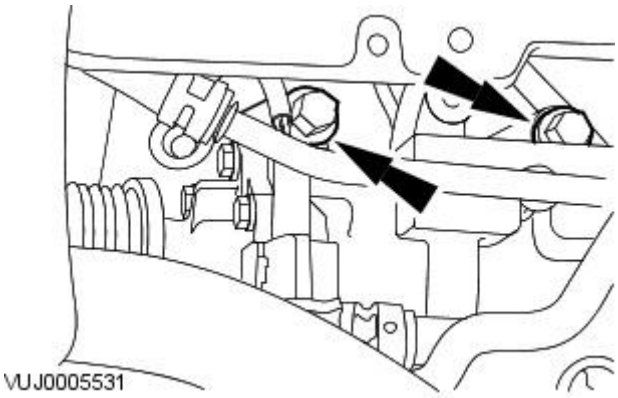


**6.** Remove the air conditioning (A/C) compressor upper retaining bolts.

**7.** Lower the vehicle.

Vehicles without supercharger

**8.** Remove the throttle body. For additional information, refer to: (303-04B Fuel Charging and Controls - V8 4.2L Petrol/V8 S/C 4.2L Petrol)

Throttle Body - Vehicles Without: Supercharger, VIN Range: M45255->N52047 (Removal and Installation),
Throttle Body - Vehicles Without: Supercharger, VIN Range: N52048->N99999 (Removal and Installation).

Vehicles with supercharger

**9.** Remove the air cleaner outlet pipe.
For additional information, refer to: Air Cleaner Outlet Pipe (303-12B Intake Air Distribution and Filtering - V8 4.2L Petrol/V8 S/C 4.2L Petrol, Removal and Installation).

All vehicles

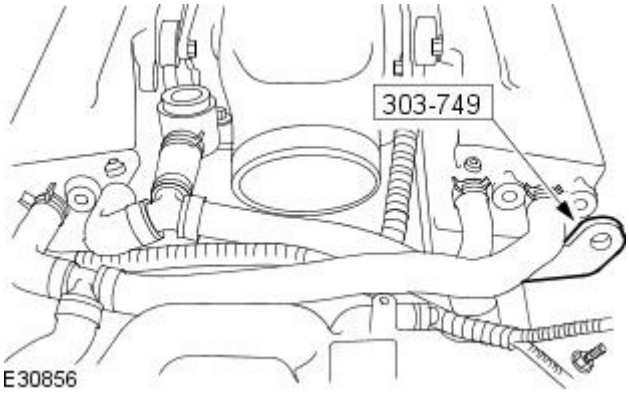


**10.** NOTE: Vehicles with supercharger shown, vehicles without superchager similar.

Install the left-hand engine lifting eye.

GETtheMANUALS.org

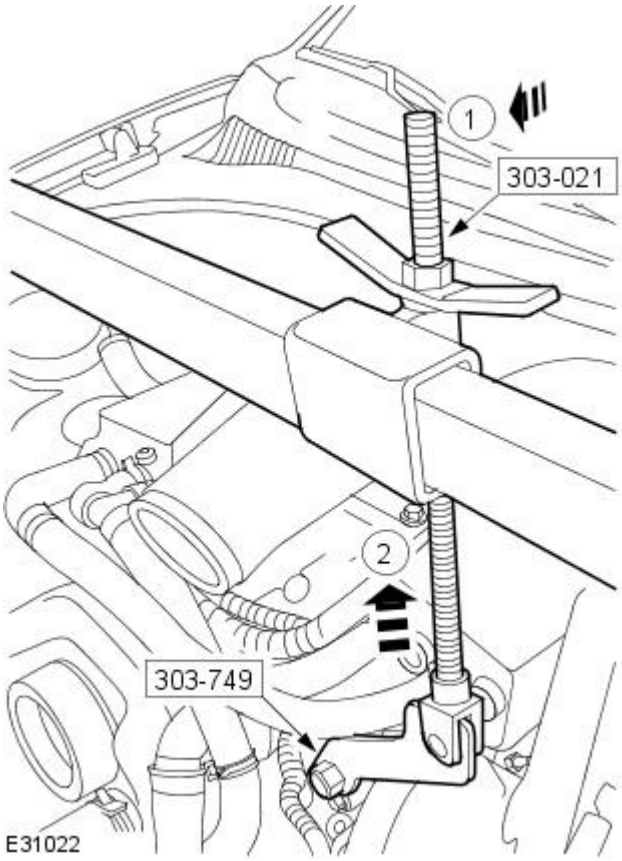


**11.** NOTE: Vehicles with supercharger shown, vehicles without superchager similar.

Using the special tools, raise the engine to a suitable height.

**12.** Raise the vehicle.

**13.** Detach the A/C compressor.

- Remove the A/C compressor lower retaining bolt.

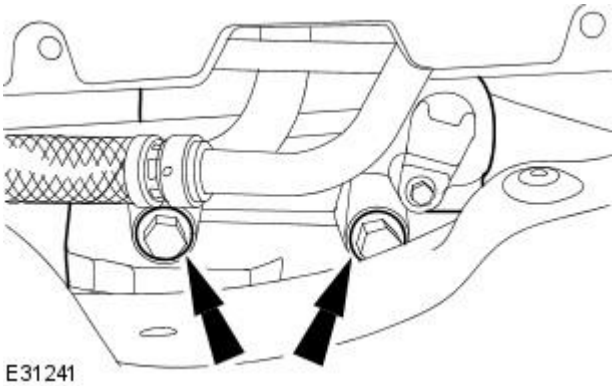


**14.** Remove the power steering pump lower retaining bolts.

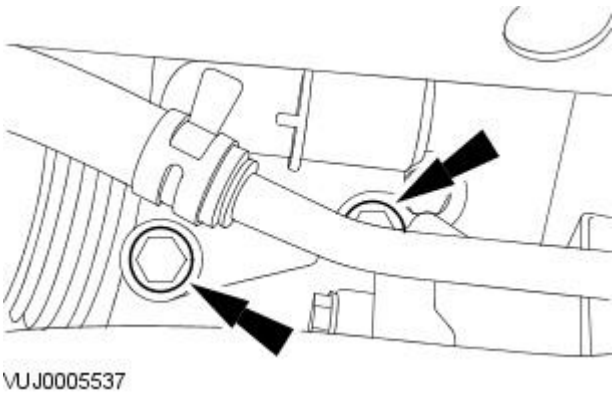


**15.** Lower the vehicle.

GETtheMANUALS.org

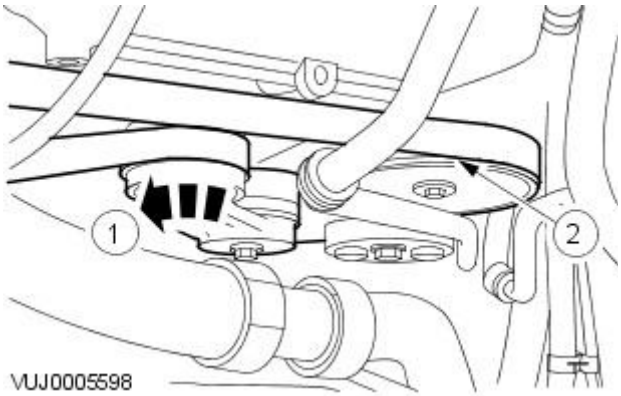


**16.** Detach the accessory drive belt.

1. Rotate the accessory drive belt tensioner counter-clockwise.
   1. Use a 3/8 inch square drive bar to rotate the accessory drive belt tensioner.
2. Detach the accessory drive belt.

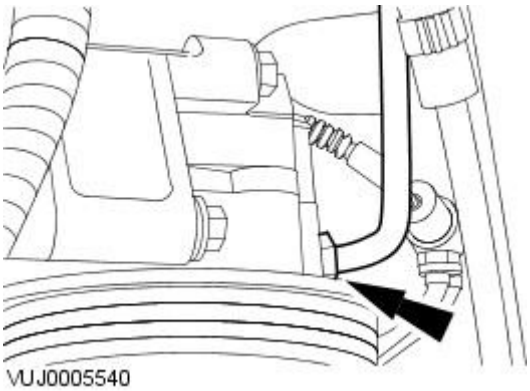


**17.** CAUTIONS:

Cap the power steering lines to prevent loss of fluid and dirt ingress.

If power steering fluid comes into contact with the paintwork, the affected area must be immediately washed down with cold water.

• NOTE: Drain the fluid into a suitable container.

Disconnect the power steering pump to steering gear pressure line.

- Remove and discard the O-ring seal.

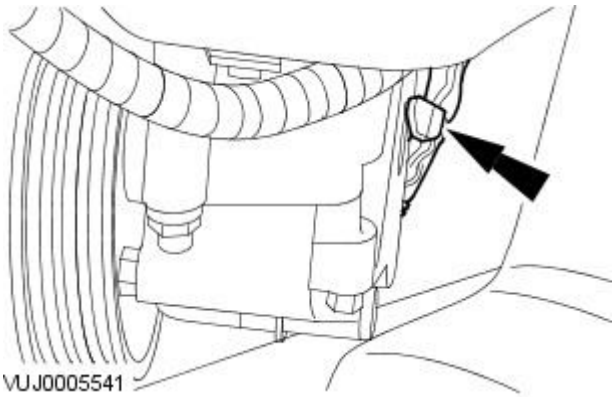


**18.** Detach the wiring harness retaining clip from the power steering pump.

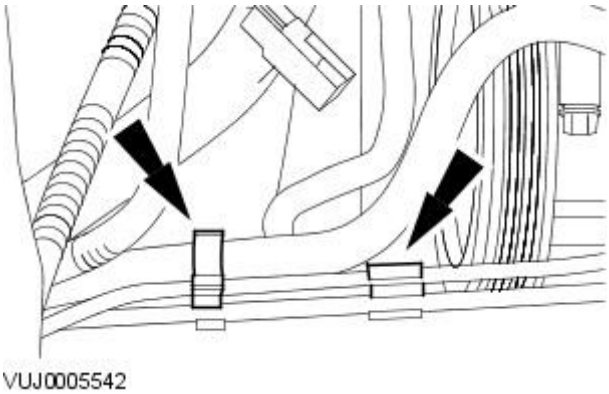


**19.** Detach the brake pipe retaining clamps.

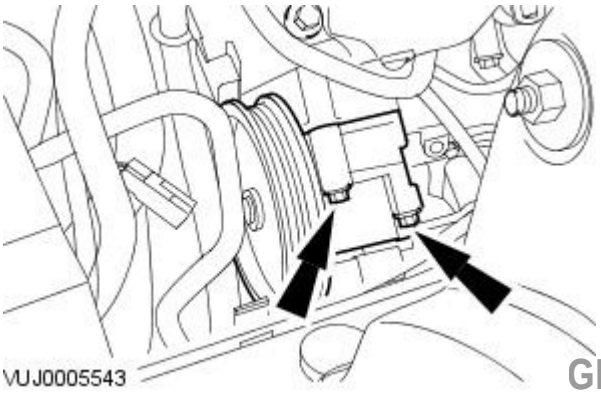


**20.** Remove the power steering pump.

GETtheMANUALS.org

## Installation

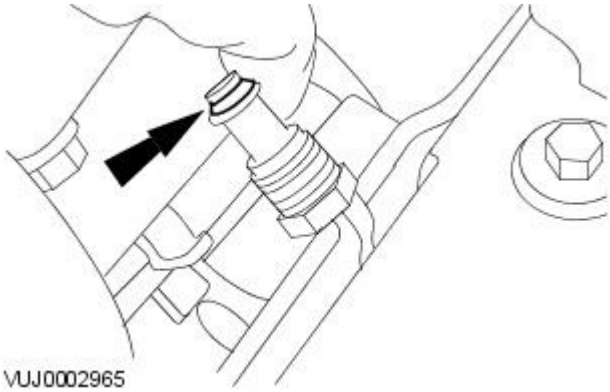


**1.** To install, reverse the removal procedure.

- Install a new O-ring seal.

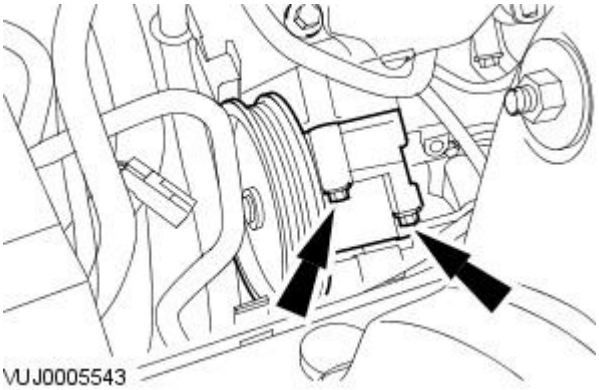


**2.** Tighten to 25 Nm.

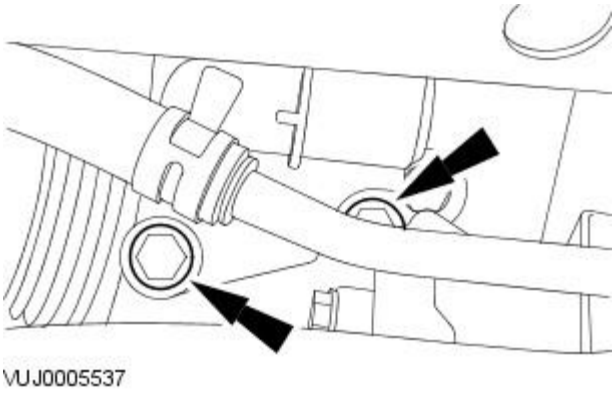


**3.** Tighten to 25 Nm.

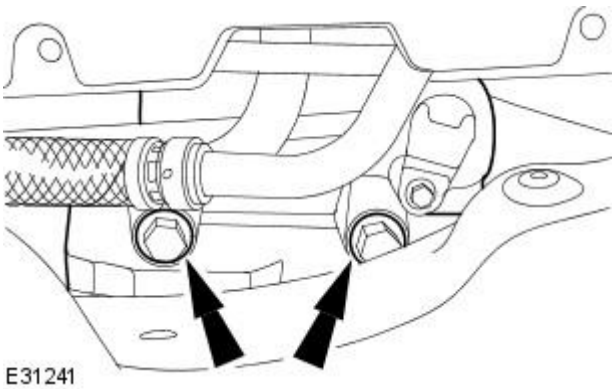


**4.** Tighten to 25 Nm.

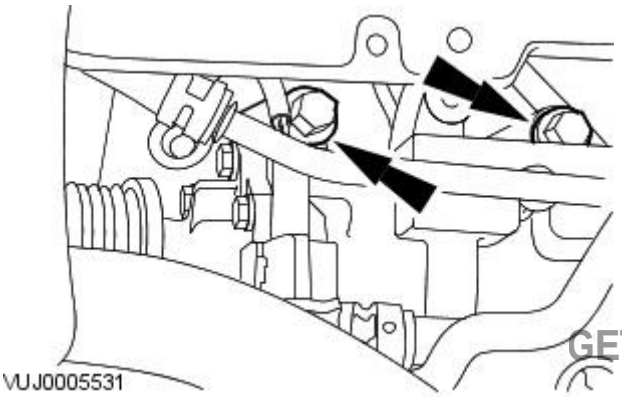


**5.** Tighten to 25 Nm.

GETtheMANUALS.org

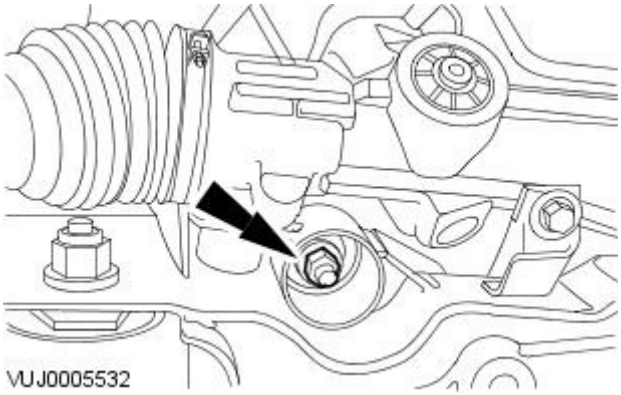


**6.** Tighten to 63 Nm.

**7.** NOTE: If the pump is being replaced for leakage or noise related issues and there is no evidence of fluid contamination, there is no need to replace the reservoir.

In some cases where the fluid clearly contains particulate matter, and the system continues to function, flush the system with fresh fluid and replace the reservoir, as there is the possibility that the reservoir internal filter may be damaged or faulty.

GETtheMANUALS.org

# Power Steering - Steering Gear

Removal and Installation

## Removal

All vehicles

**1.** Center the steering wheel.

- Lock in position, remove the ignition key.

**2.** NOTE: RH illustration shown, LH is similar.

Release both tie rod end ball joints.

1. Loosen the locknut.
2. Release both track rods from tie rod ends, note the number of turns for installation.

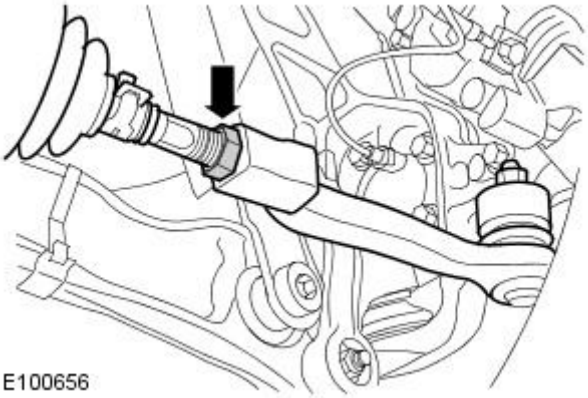


**3.** Remove both tie-rod end lock nuts.

**4.** Remove the air deflector.
For additional information, refer to: Air Deflector (501-02 Front End Body Panels, Removal and Installation).

**5.** Make sure the alignment mark on the steering gear pinion seal protection cover is central to the steering gear pinion casting.

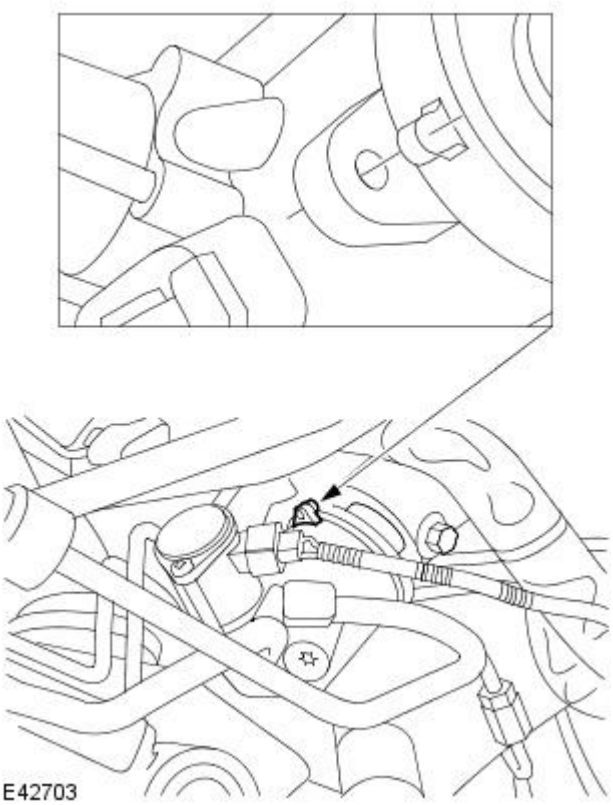


GETtheMANUALS.org

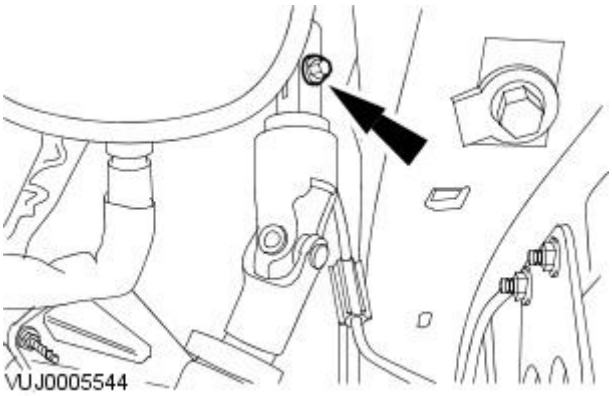


**6.** Loosen the lower steering column pinch bolt.

Vehicles built up to 01/2004

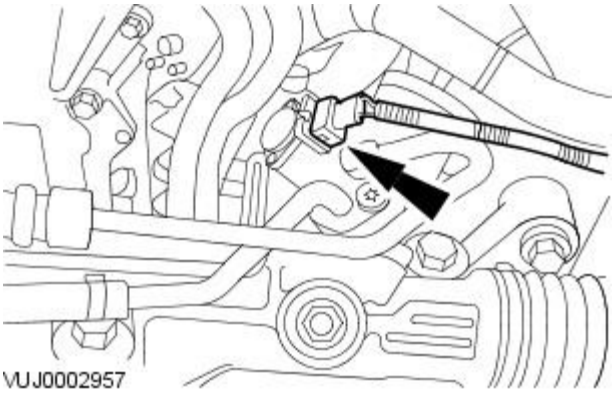


**7.** Disconnect the power steering control valve actuator electrical connector.

All vehicles

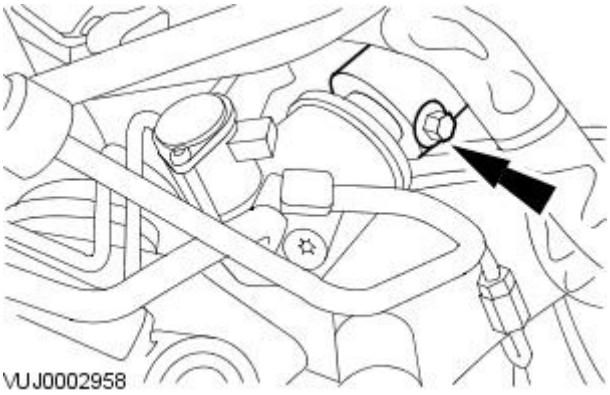


**8.** Detach the lower steering column.

- Remove the steering gear shaft pinch bolt.

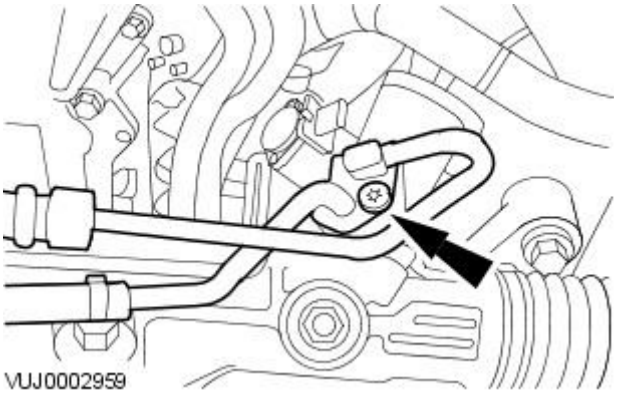


**9.** CAUTIONS:

Cap the power steering lines to prevent loss of fluid and dirt ingress.

If power steering fluid comes into contact with the paintwork, the affected area must be immediately washed down with cold water.

• NOTE: Drain the fluid into a suitable container.

Disconnect the power steering supply and return lines.

- Remove and discard the O-ring seals.

GETtheMANUALS.org

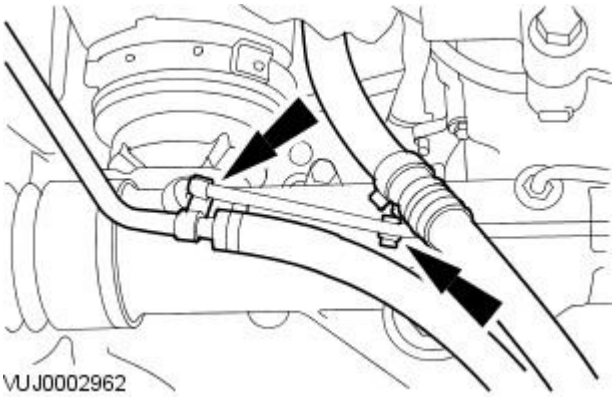


**10.** Detach the steering gear supply and return lines.

Vehicles built up to 01/2004

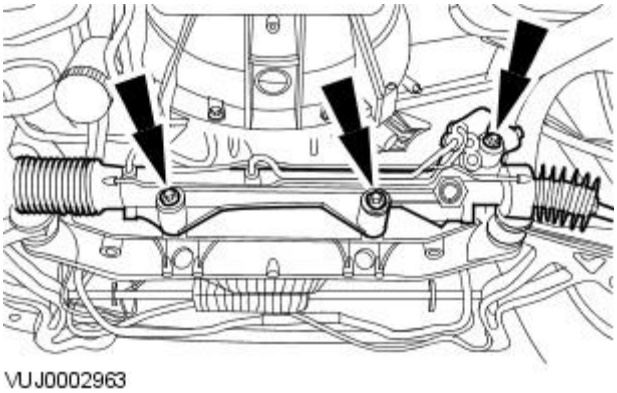


**11.** Remove the steering gear.

Vehicles built 02/2004 onwards

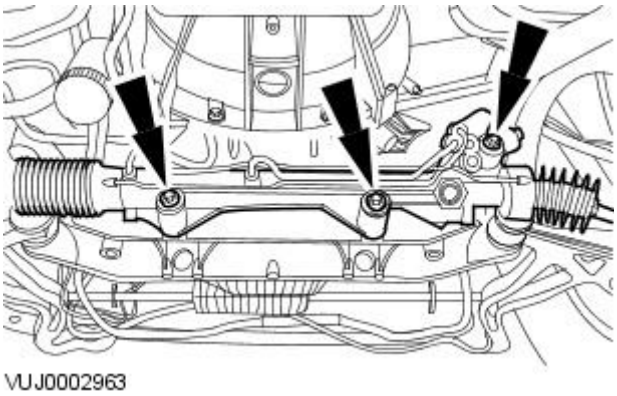


**12.** Detach the steering gear.

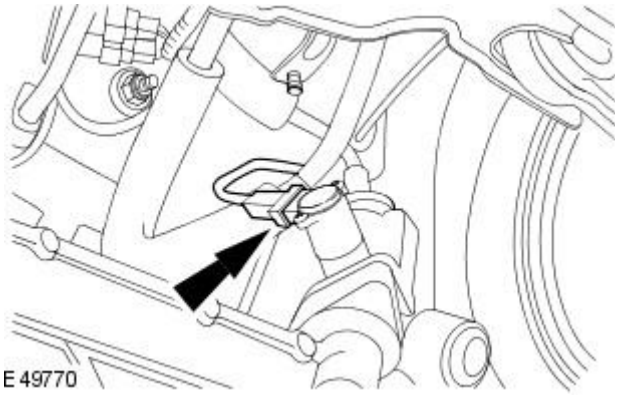


**13.** Disconnect the power steering control valve actuator electrical connector.

- Remove the steering gear.

## Installation

Vehicles built 02/2004 onwards

GETtheMANUALS.org

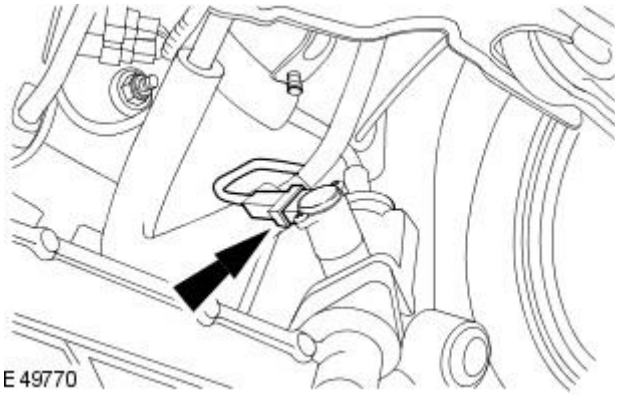


**1.** Install the steering gear.

- Connect the power steering control valve actuator electrical connector.

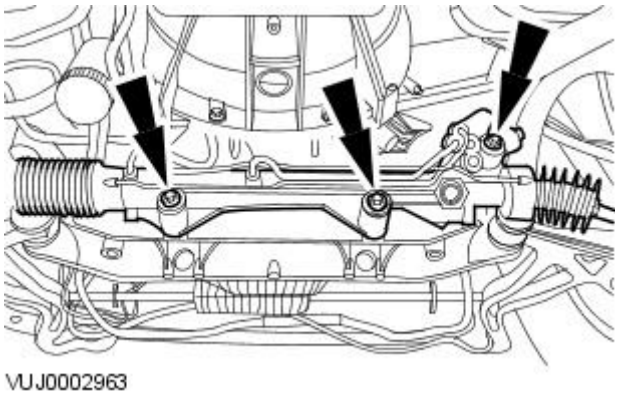


**2.** Tighten to 100 Nm.

Vehicles built up to 01/2004

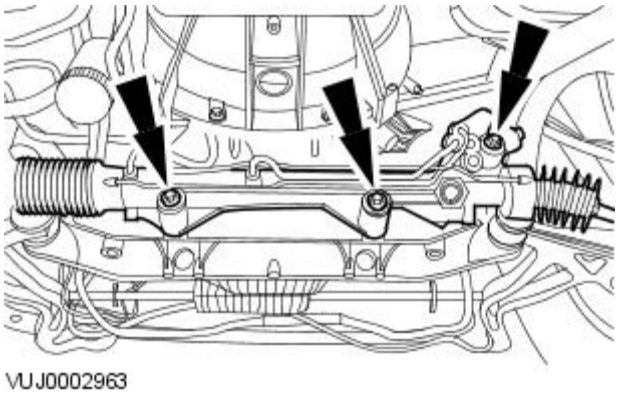


**3.** Install the steering gear.

- Tighten to 100 Nm.

All vehicles

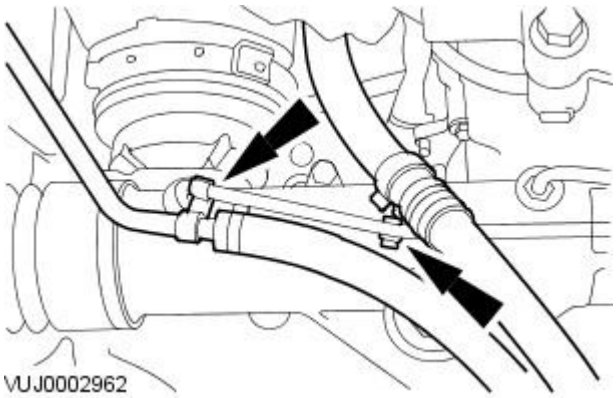


**4.** Attach the steering gear supply and return lines.

GETtheMANUALS.org

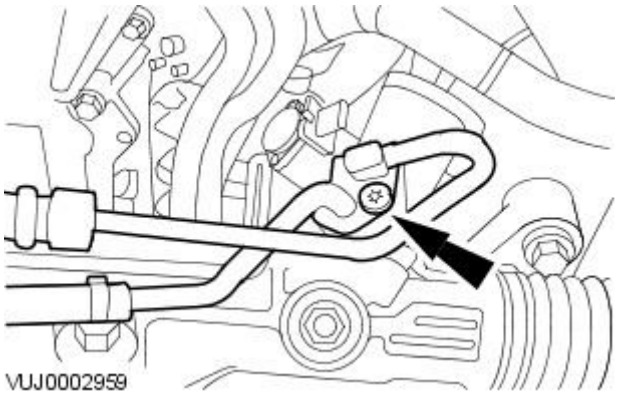


**5.** NOTE: Install new O-ring seals.

Connect the power steering supply and return lines.

- Tighten to 15 Nm.

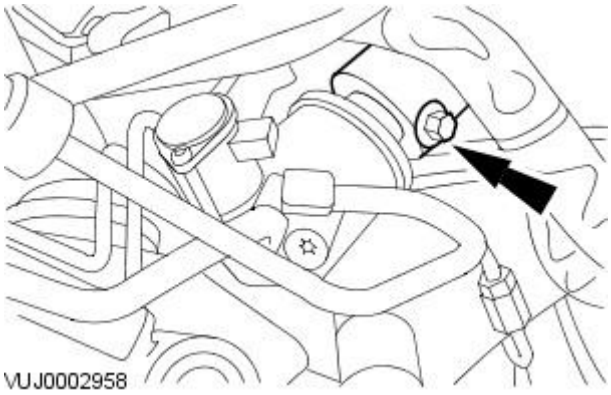


**6.** Install the steering gear shaft pinch bolt.

- Tighten to 35 Nm.

Vehicles built up to 01/2004

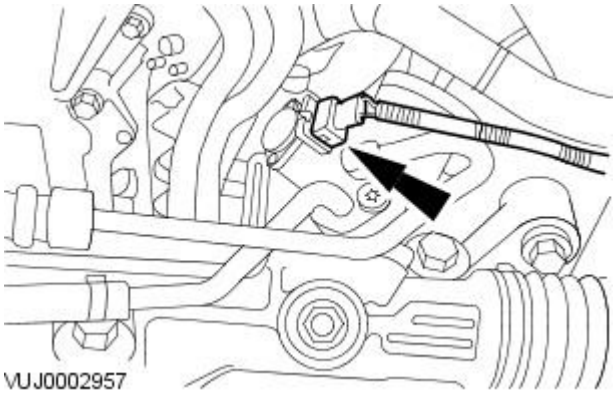


**7.** Connect the power steering control valve actuator electrical connector.

All vehicles

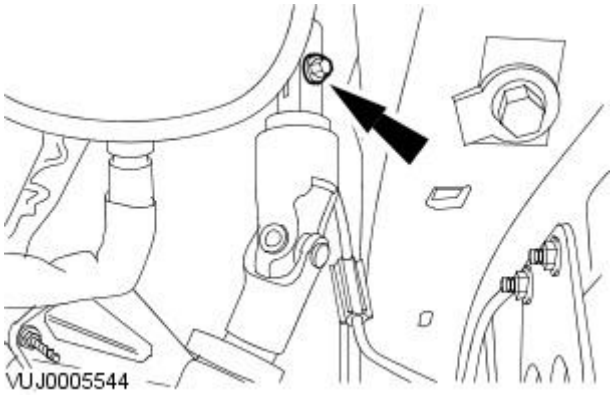


**8.** Tighten the lower steering column pinch bolt.

- Tighten to 35 Nm.

GETtheMANUALS.org

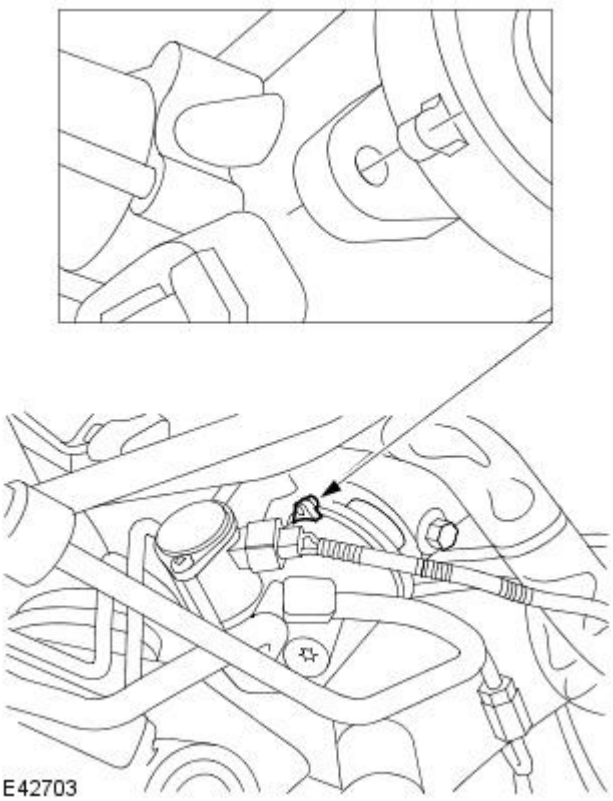


**9.** Make sure the alignment mark on the steering gear pinion seal protection cover is central to the steering gear pinion casting.

**10.** Install the air deflector.
For additional information, refer to: Air Deflector (501-02 Front End Body Panels, Removal and Installation).

**11.** Install both tie-rod end lock nuts.

**12.** Connect the tie rod end ball joints.

1. Attach both tie rods to previously noted positions.
2. Tighten the tie rod locking nut.

**13.** Carry out steering system bleed procedure.
For additional information, refer to: Power Steering System Bleeding (211-00 Steering System - General Information, General Procedures).

**14.** NOTE: If the steering gear is being replaced for leakage or noise related issues and there is no evidence of fluid contamination, there is no need to replace the reservoir.

In some cases where the fluid clearly contains particulate matter, and the system continues to function, flush the system with fresh fluid and replace the reservoir, as there is the possibility that the reservoir internal filter may be damaged or faulty.

**15.** If new steering gear has been installed carry out the front toe adjustment procedure.
For additional information, refer to: Front Toe Adjustment (204-00 Suspension System - General Information, General Procedures).

GETtheMANUALS.org

# Power Steering - Steering Gear Bushing

Removal and Installation

| Special Tool(s) | |
|---|---|
| 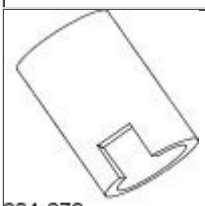 204-273 | Steering gear lower bush remover and installer.<br><br>204-273 |
| 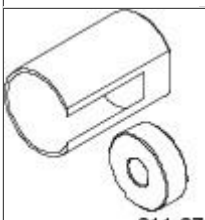 211-271 | Steering gear upper bush remover and installer.<br><br>211-271 |
| 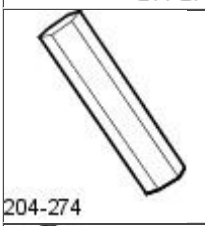 204-274 | Steering gear bush remover and installer (Nut)<br><br>204-274 |
| 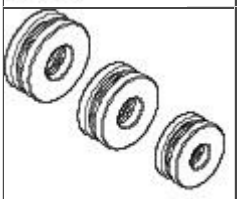 JAG-061 | Bearings<br><br>JAG-061 |
| 204-275 | Steering gear bush remover and installer (Bolt)<br><br>204-275 |

## Removal

All vehicles

1. Center the steering wheel.
   - Lock in position and remove the ignition key.
2. Remove the air deflector.
   For additional information, refer to: Air Deflector (501-02 Front End Body Panels, Removal and Installation).

Vehicles built up to 01/2004

3. Disconnect the power steering control valve actuator electrical connector.

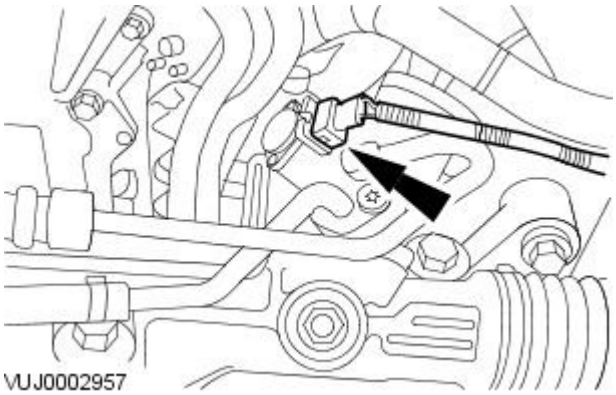


All vehicles

GETtheMANUALS.org

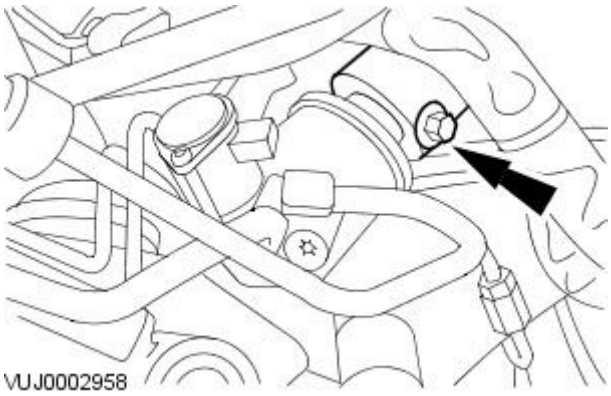


**4.** Detach the lower steering column.

- Remove the steering gear shaft pinch bolt.

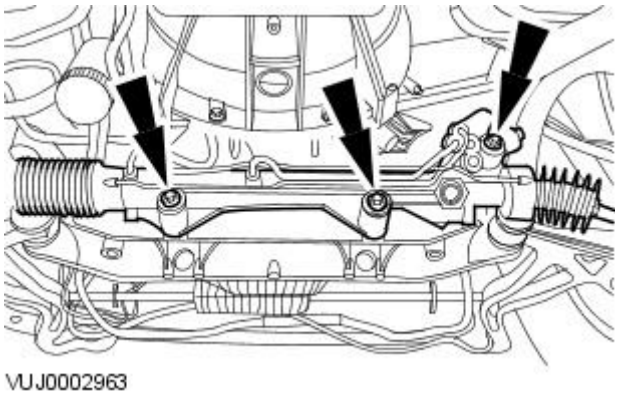


**5.** Detach the steering gear.

Vehicles built 02/2004 onwards

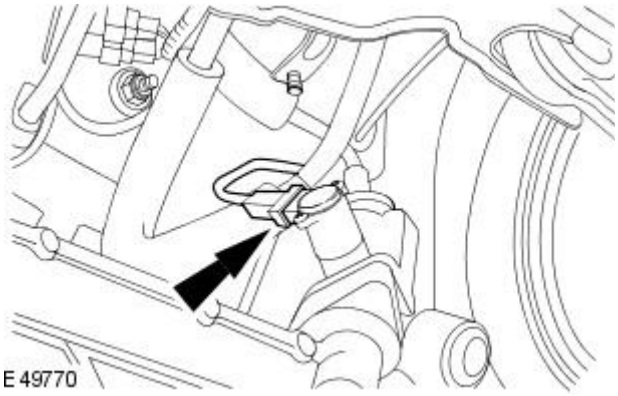


**6.** Disconnect the power steering control valve actuator electrical connector.

All vehicles

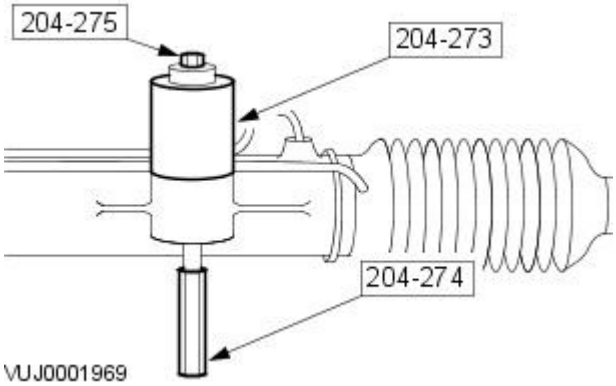


**7.** Using the special tools, remove the steering gear lower bushes.

GETtheMANUALS.org

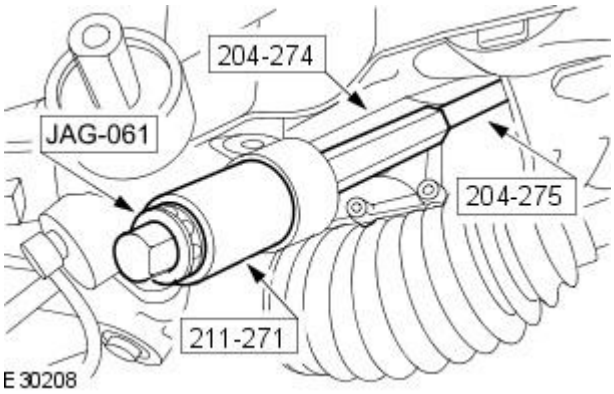


**8.** Using the special tools, remove the steering gear upper bush.

## Installation

All vehicles

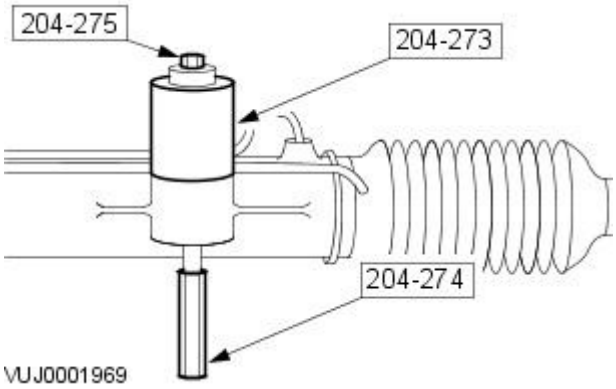


**1.** NOTE: Apply a thin film of lubricant to the steering gear bushes.

Using the special tools, install the steering gear lower bushes.

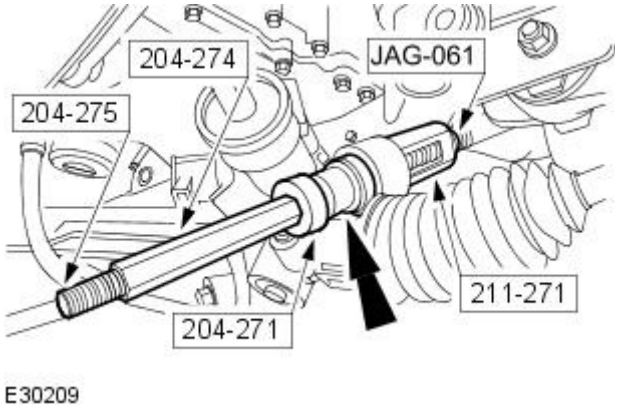


**2.** NOTE: Apply a thin film of lubricant to the steering gear bush.

Using the special tool, install the steering gear upper bush.

Vehicles built 02/2004 onwards

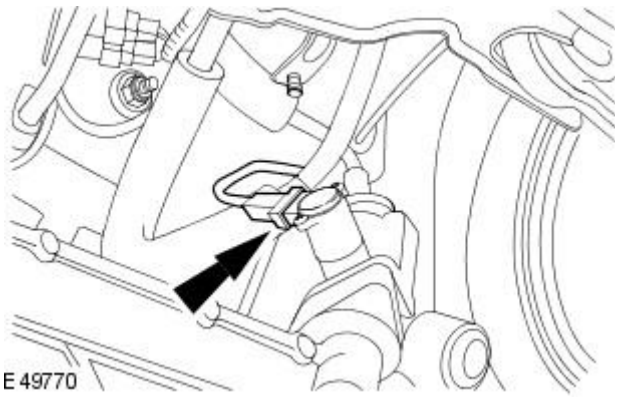


**3.** Connect the power steering control valve actuator electrical connector.

All vehicles

GETtheMANUALS.org

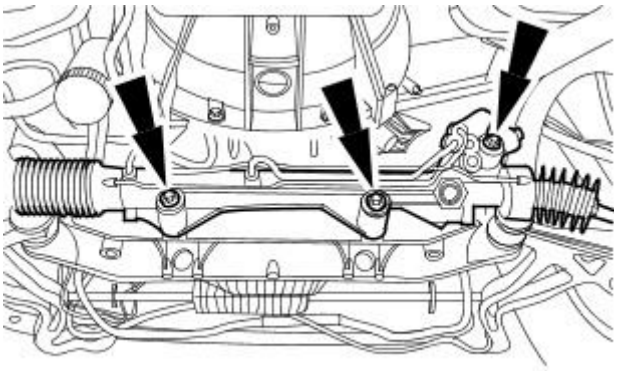

VUJ0002963

4. Install the steering gear.
   - Tighten to 100 Nm.

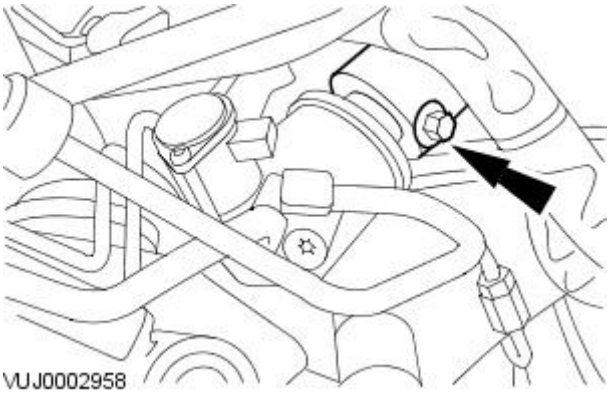

VUJ0002958

5. Install the steering gear shaft pinch bolt.
   - Tighten to 35 Nm.

Vehicles built up to 01/2004

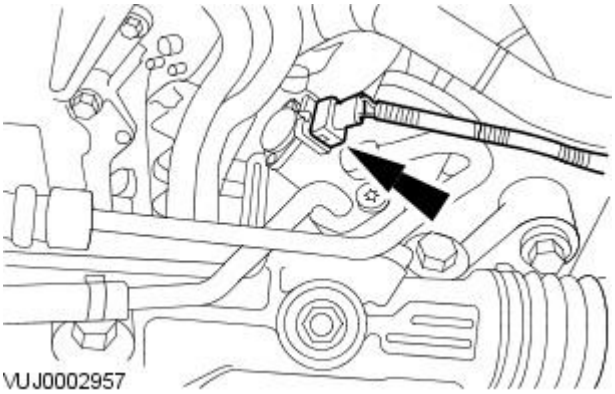

VUJ0002957

6. Connect the power steering control valve actuator electrical connector.

All vehicles

7. Install the air deflector.
   For additional information, refer to: Air Deflector (501-02 Front End Body Panels, Removal and Installation).

GETtheMANUALS.org

# Steering Linkage -

**Torque Specifications**

| Description | Nm | lb-ft | lb-in |
|---|---|---|---|
| Tie-rod end retaining nut | 100 | 74 | - |
| Tie-rod end lock nut | 55 | 41 | - |

GETtheMANUALS.org

# Steering Linkage - Steering Linkage

Description and Operation

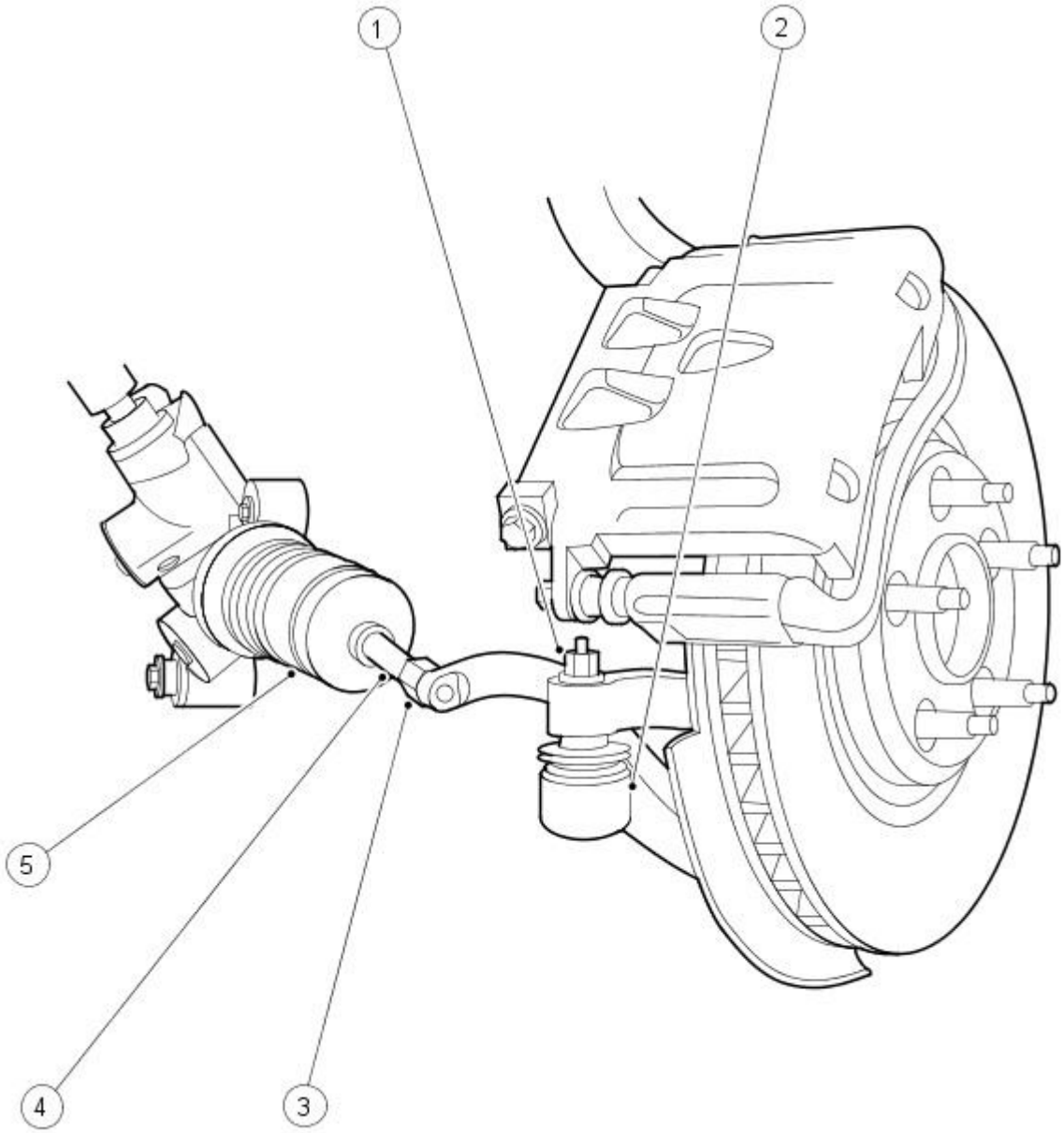


E30455

| Item | Part Number | Description |
|---|---|---|
| 1 | — | Tie-rod end retaining nut |
| 2 | — | Tie-rod end |
| 3 | — | Tie-rod end lock nut |
| 4 | — | Tie-rod |
| 5 | — | Tie-rod end boot |

The left and right-hand tie-rod assemblies:

- Transmit steering forces from the steering gear to the wheel knuckles.
- Provide front road wheel toe setting by adjustment of the threaded outer tie-rod ends.

• NOTE: Steering geometry adjustments must only be carried out with the vehicle on turn plates to allow the wheels to move during adjustment.

The left and right-hand steering rack boots:

- Are installed between the steering rack and the tie-rod ends.
- Are of the concertina type.
- Are to prevent the ingress of foreign matter.

GETtheMANUALS.org

Published: 11-May-2011

# Steering Linkage - Steering Linkage

Diagnosis and Testing

For additional information, refer toSection 211-00 Steering System - General Information

GETtheMANUALS.org

# Steering Linkage - Steering Gear Boot

Removal and Installation

## Removal

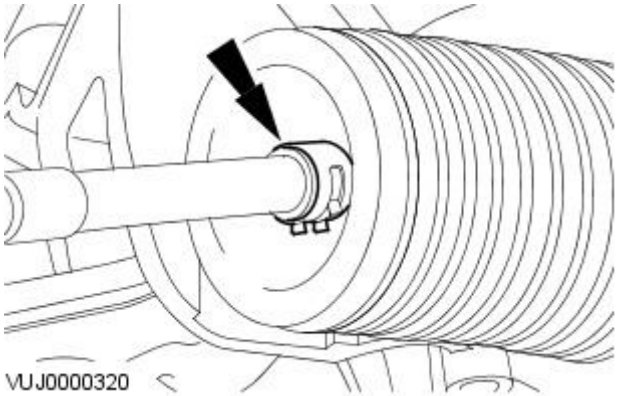


1. Remove the tie rod end.
   For additional information, refer to Tie-Rod End in this section.
2. Remove and discard the tie-rod boot outer retaining clamp.

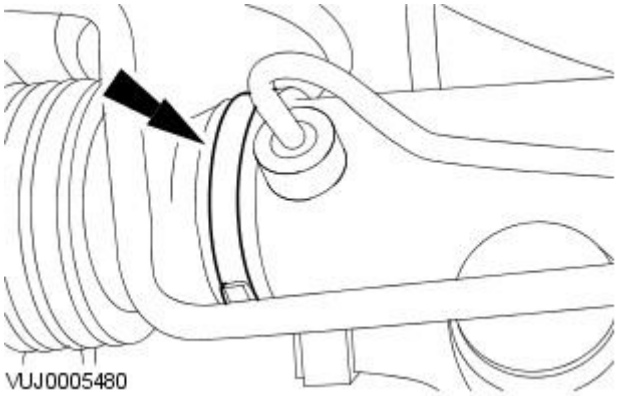


3. Remove and discard the tie-rod boot inner retaining clamp.

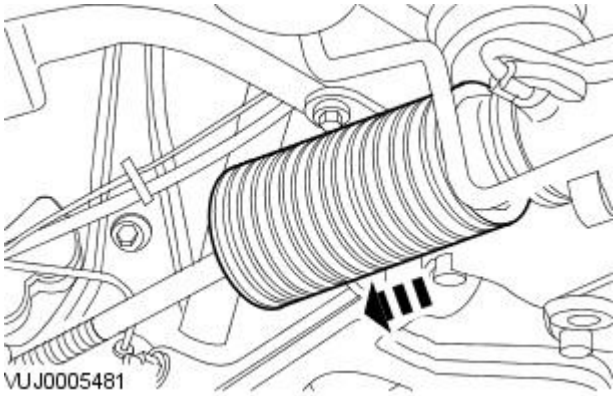


4. CAUTION: Make sure the area is washed down thoroughly before removing the steering gear boot.

   Remove the tie-rod boot.

## Installation

1. CAUTION: Make sure the tie-rod is clean before installing the steering gear boot.

- NOTE: Install new retaining clamps.

To install, reverse the removal procedure.

GETtheMANUALS.org

# Steering Linkage - Tie Rod End

Removal and Installation

## Removal

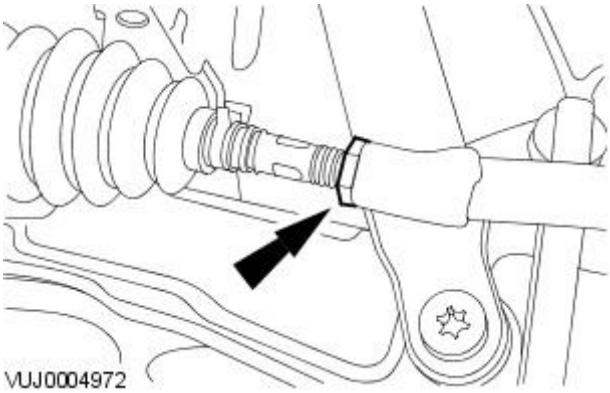


1. Remove the front wheel and tire.
   For additional information, refer to Section 204-04 Wheels and Tires.
2. Loosen the tie-rod end lock nut.

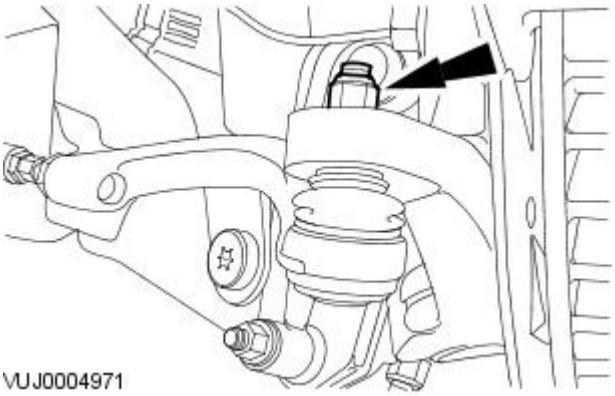


3. CAUTION: Prevent the tie-rod end ball joint ball pin from rotating. Failure to do so may result in damage to the tie-rod end ball joint boot.

   Remove the tie-rod end retaining nut.

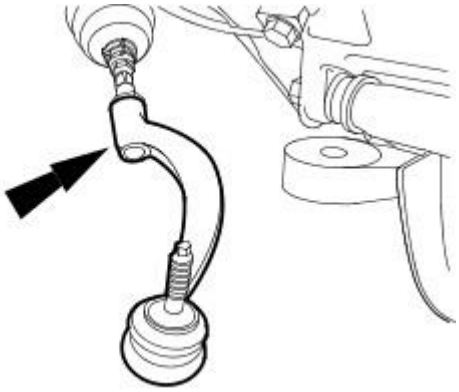


4. NOTE: Make a note of the number of turns required to remove the tie-rod end.

   Remove the tie-rod end.

## Installation

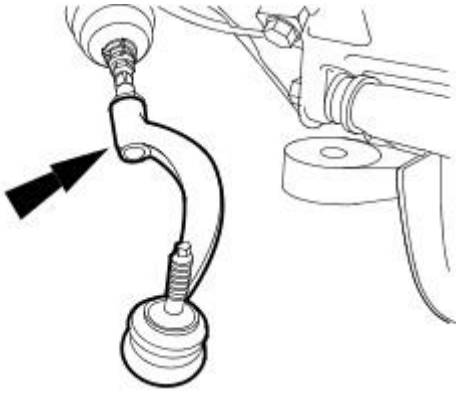


1. NOTE: Make sure the tie-rod end is installed on the tie-rod by the same amount of turns used to remove it.

   Install the tie-rod end.

GETtheMANUALS.org

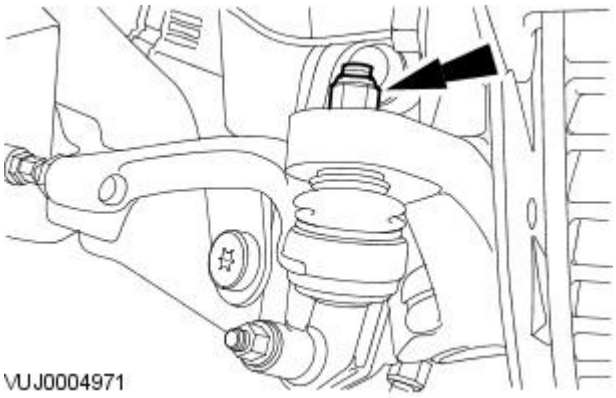


**2.** CAUTIONS:

Prevent the tie-rod end ball joint ball pin from rotating. Failure to do so may result in damage to the tie-rod end ball joint boot.

Make sure the mating surfaces are free from dirt and lubricant.

Install the tie-rod end retaining nut.

- Tighten to 100 Nm.

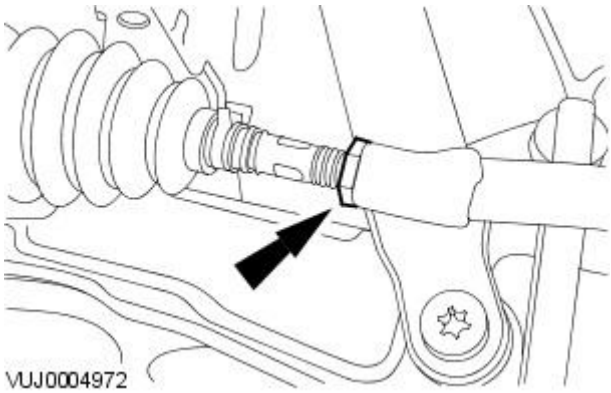


**3.** Tighten the tie-rod end lock nut.

- Tighten to 55 Nm.

**4.** Check the front toe adjustment.
For additional information, refer to Section 204-00 Suspension System - General Information.

GETtheMANUALS.org

# Steering Column -

**Torque Specifications**

| Description | Nm | lb-ft | lb-in |
|---|---|---|---|
| Steering wheel retaining bolt | 65 | 48 | - |
| Steering column pinch bolt | 35 | 26 | - |
| Steering column retaining nuts | 30* | 22 | - |
| Tilt solenoid retaining bolts | 1 | - | 9 |
| Telescopic solenoid retaining bolts | 1 | - | 9 |
| Telescopic housing retaining bolts | 8 | - | 71 |

If you are re-using this fixing on a vehicle built prior to VIN N83337, then tighten to 25 Nm. If you are replacing a fixing, then you must tighten to 30 Nm.

GETtheMANUALS.org

# Steering Column - Steering Column

Description and Operation

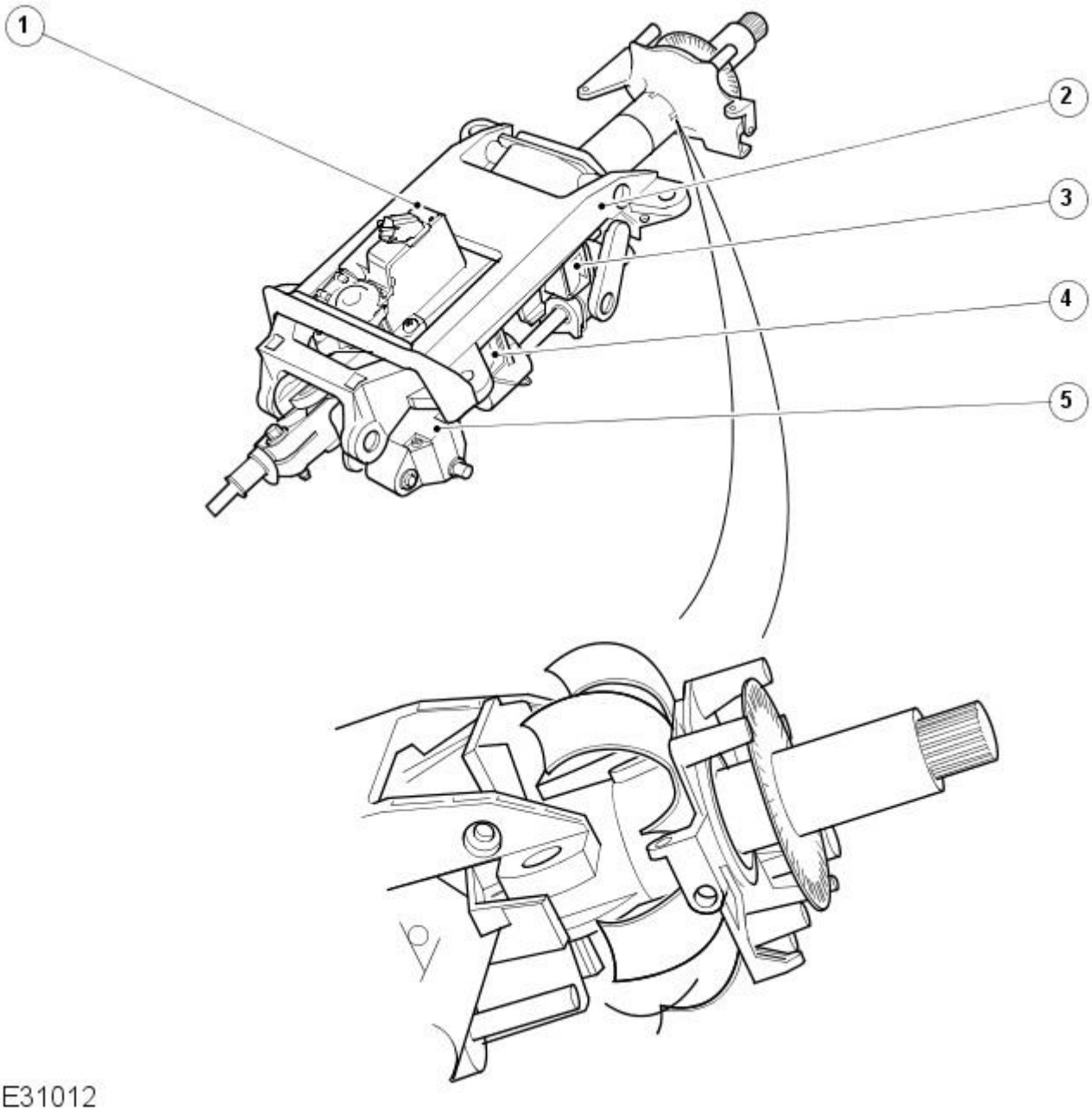


| Item | Part Number | Description |
|---|---|---|
| 1 | — | Steering column lock actuator |
| 2 | — | Steering column |
| 3 | — | Tilt solenoid column |
| 4 | — | Tilt/Telescopic motors |
| 5 | — | Tilt/Telescopic motor |

The steering lock actuator is secured to the lower part of the adjustable steering column and consists of a locking pin and an electric motor. The electric motor has a hall effect sensor which detects lock and unlock states, this makes the lock actuator more sensitive for the time taken to lock and unlock. A bus controller chip has also been added to cope with the high integrity bus traffic. The column is locked and unlocked by inserting and removing the ignition key respectively. The instrument cluster provides control for the column adjustment by means of a power tilt/telescope switch on the side of the steering column lower shroud, memory recall and easy entry or exit.

The column is a tilt and telescopic type consisting of one electric motor to tilt and telescope the steering column. The steering column has 50mm of telescopic movement and 5 degrees of tilt adjust. The power tilt and telescope function allows the driver to manually set the steering column position by using the power tilt/telescope switch, regardless of the ignition switch position. When moving the column, the switch will only allow one directional movement at a time.

Crash load absorption is provided by a unique peeling tube mechanism. If an accident occurs and the driver is not wearing a safety belt the steering column must be replaced. The steering column must also be replaced if the air bag is deployed.

The steering column will need to be calibrated if the column or the instrument cluster is renewed. Calibration is carried out using the Jaguar Approved Diagnostic System. No routine maintenance of the steering wheel and driver airbag is required. Any setting of steering wheel for misalignment must be achieved by adjusting tie rods.

GETtheMANUALS.org

Published: 11-May-2011

# Steering Column - Steering Column

Diagnosis and Testing

For additional information, refer to Section 211-00 Steering System - General Information.

GETtheMANUALS.org

# Steering Column - Ignition Switch Lock Cylinder

Removal and Installation

## Removal

Vehicles with ignition switch lock cylinder interlock cable

1. Remove the transmission selector lever.
   For additional information, refer to Section 307-05 Automatic Transmission/Transaxle External Controls.
2. Detach the ignition switch lock cylinder interlock cable.

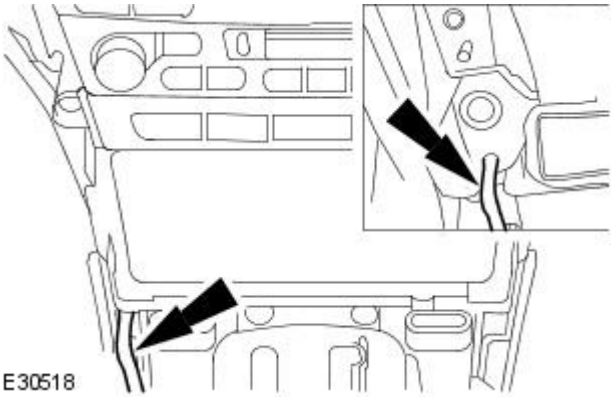


All vehicles

3. Remove the instrument panel lower trim.

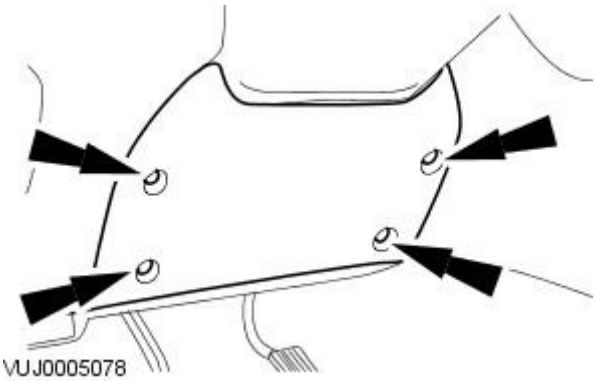


4. Detach the steering column lower shroud.

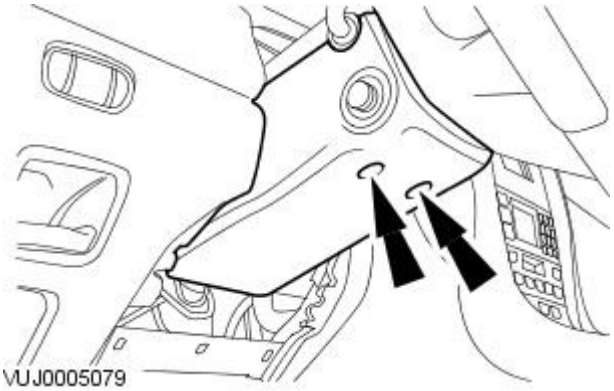


5. Remove the steering column lower shroud.

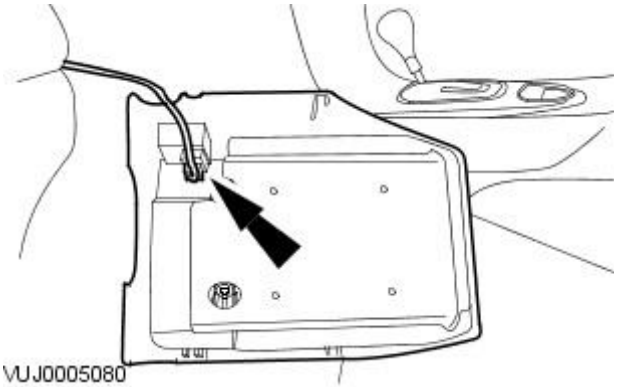


GETtheMANUALS.org

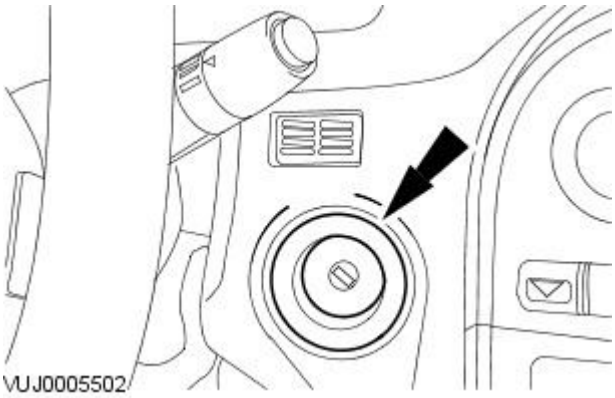


**6.** CAUTION: If excessive force is used to remove the ignition switch lock cylinder shroud damage may occur to the instrument panel.

Remove the ignition switch lock cylinder shroud.

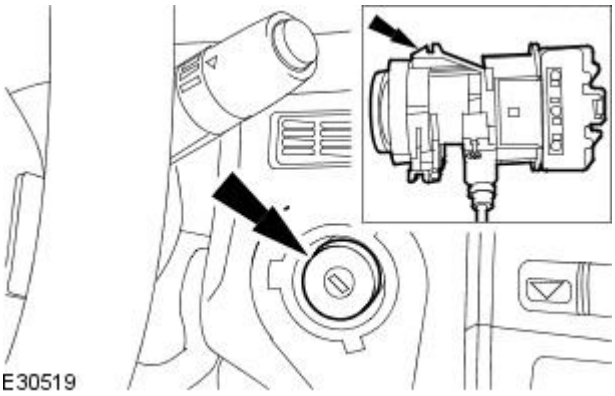


**7.** CAUTION: If excessive force is used to remove the ignition switch lock cylinder housing damage may occur to the instrument panel.

Detach the ignition switch lock cylinder housing.

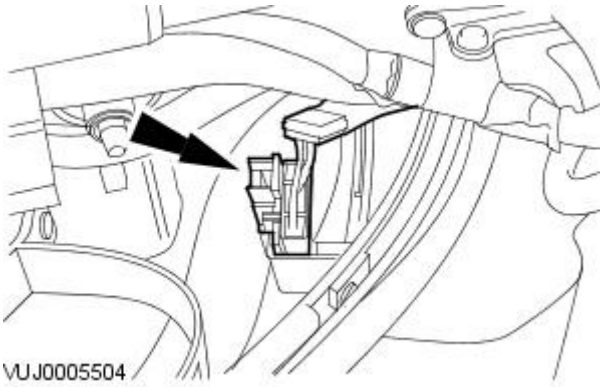


**8.** Disconnect the electrical connector.

Vehicles with ignition switch lock cylinder interlock cable

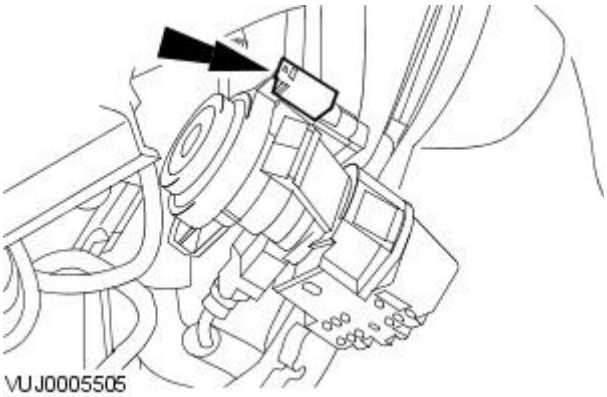


**9.** CAUTION: Make sure the ignition switch lock cylinder interlock cable is not crimped.

Remove the ignition switch lock cylinder housing.

- Disconnect the electrical connector.

All vehicles

GETtheMANUALS.org

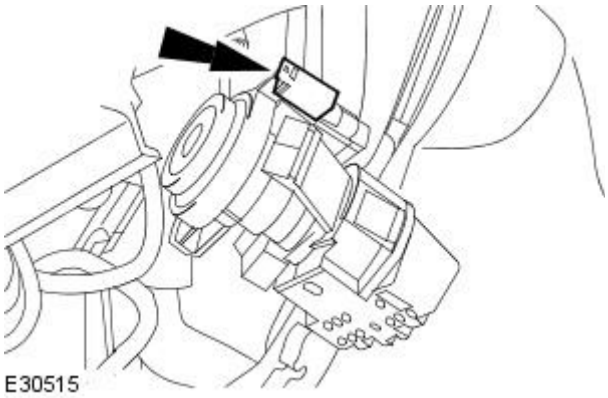


**10.** Remove the ignition switch lock cylinder housing.

- Disconnect the electrical connector.

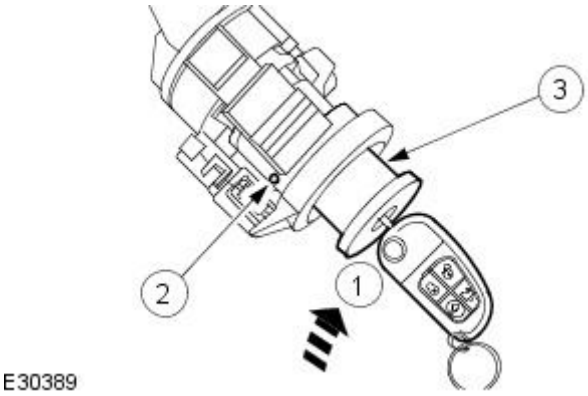


**11.** Remove the ignition switch lock cylinder.

1. Turn ignition key to position one.
2. Release the retaining tang.
3. Remove the ignition switch lock cylinder.

## Installation

Vehicles with ignition switch lock cylinder interlock cable

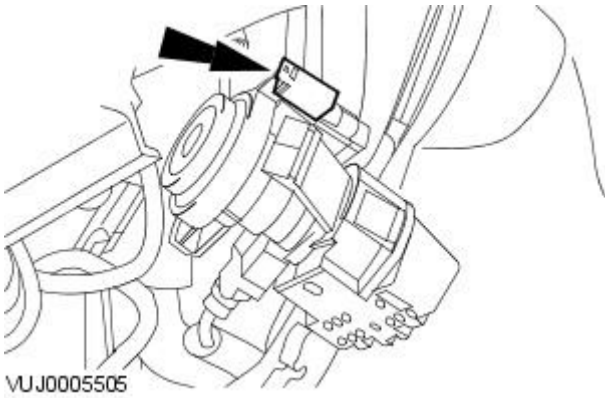


**1.** CAUTION: Make sure the ignition switch lock cylinder interlock cable is not crimped.

Install the ignition switch lock cylinder housing.

- Connect the electrical connector.

All vehicles

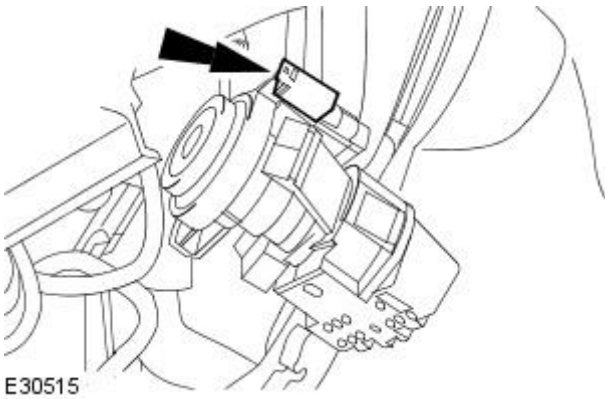


**2.** Install the ignition switch lock cylinder housing.

- Connect the electrical connector.

GETtheMANUALS.org

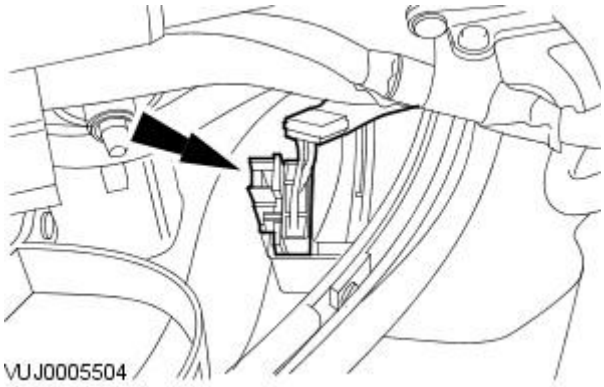


**3.** Connect the electrical connector.

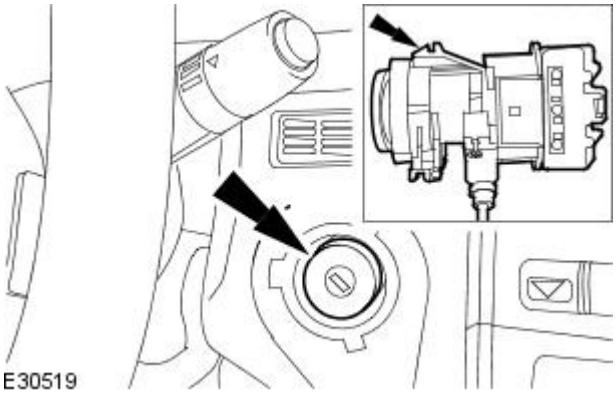


**4.** CAUTION: If excessive force is used to attach the ignition switch lock cylinder housing damage may occur to the instrument panel.

Attach the ignition switch lock cylinder housing.

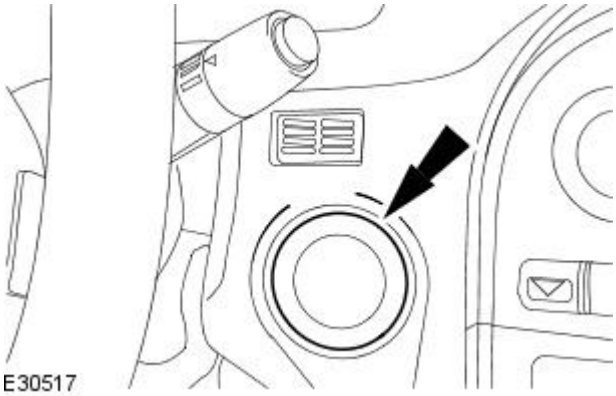


**5.** Install the ignition switch lock cylinder shroud.

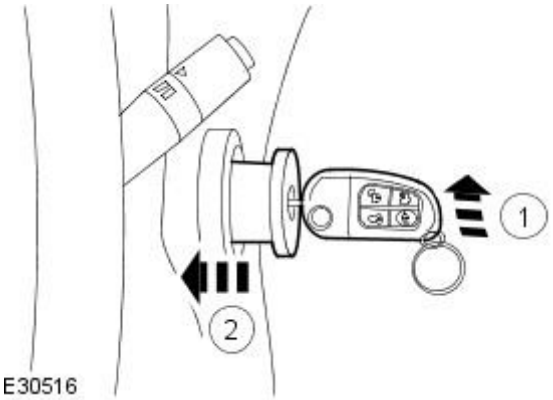


**6.** Install the ignition switch lock cylinder.

1. Turn ignition key to position one.
2. Install the ignition switch lock cylinder.

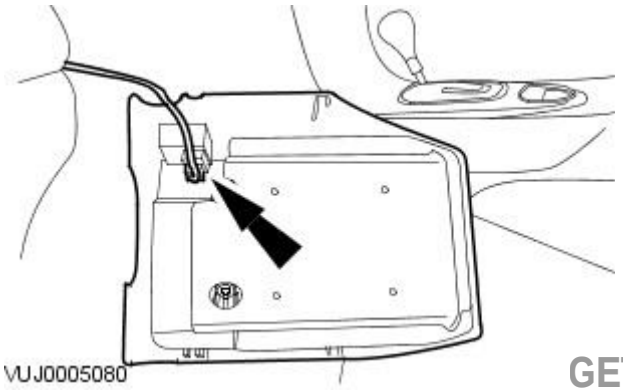


**7.** Install the steering column lower shroud.

GETtheMANUALS.org

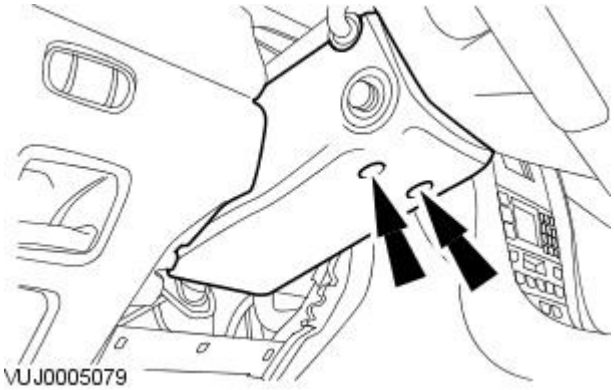


**8.** Attach the steering column lower shroud.

- Tighten to 3 Nm.

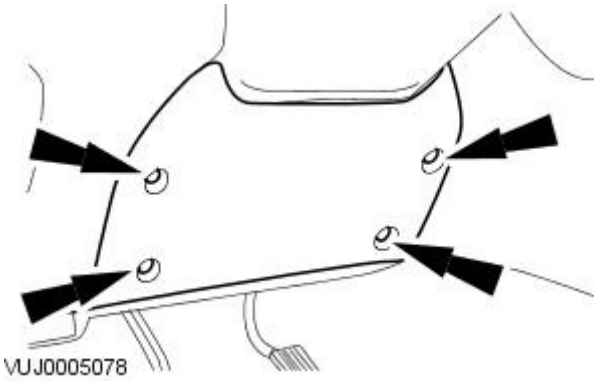


**9.** Install the instrument panel lower trim.

Vehicles with ignition switch lock cylinder interlock cable

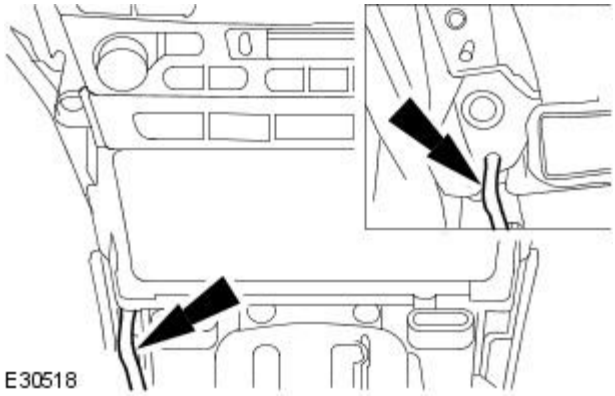


**10.** Attach the ignition switch lock cylinder interlock cable.

**11.** Install the transmission selector lever.
For additional information, refer to Section 307-05 Automatic Transmission/Transaxle External Controls.

GETtheMANUALS.org

# Steering Column - Steering Column

Removal and Installation

## Removal

1. If possible make sure that the steering column is fully lowered and fully extended.
2. Remove the clockspring.
   For additional information, refer to: Clockspring (501-20B Supplemental Restraint System, Removal and Installation).
3. Disconnect the steering wheel rotation sensor electrical connector.

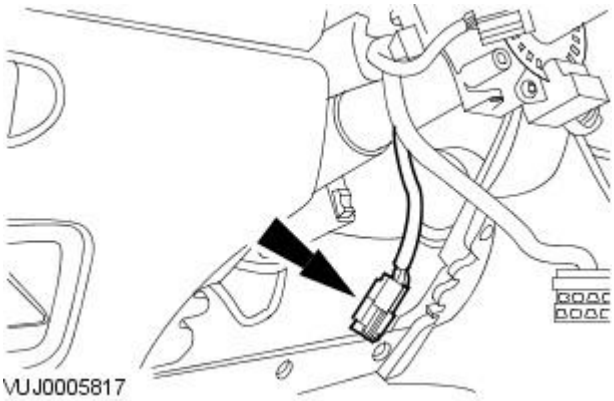


4. Remove the steering wheel rotation sensor.

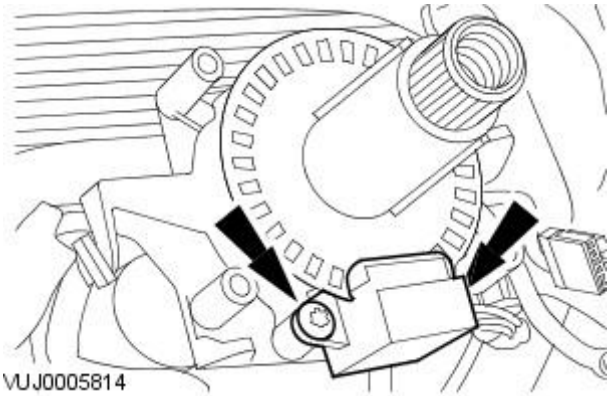


5. Detach the left-hand multifunction switch wiring harness.

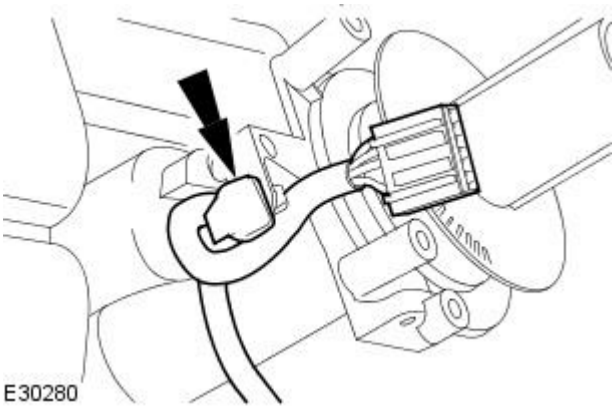


6. Detach the right-hand multifunction switch wiring harness.

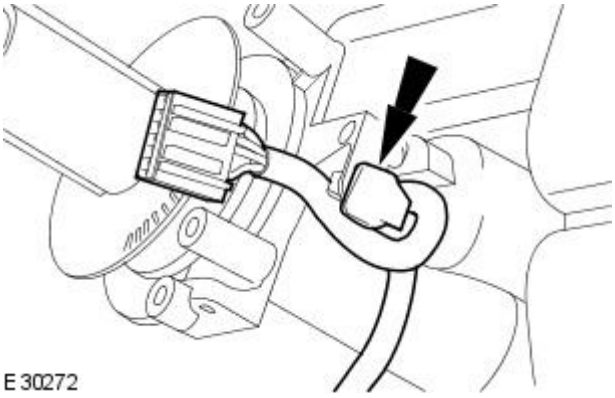


GETtheMANUALS.org

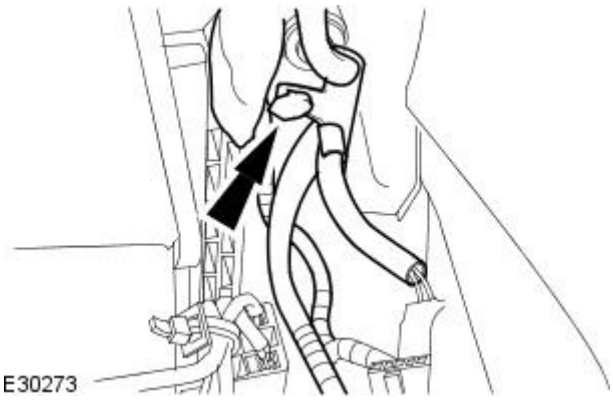


**7.** Detach the right-hand multifunction switch wiring harness.

**8.** Detach the left-hand multifunction switch wiring harness.

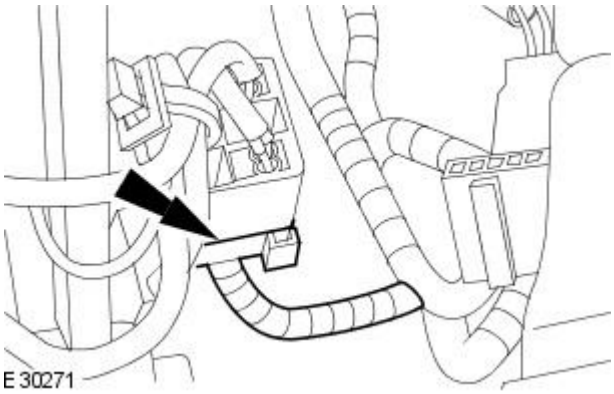


**9.** Disconnect the steering column electrical connector.

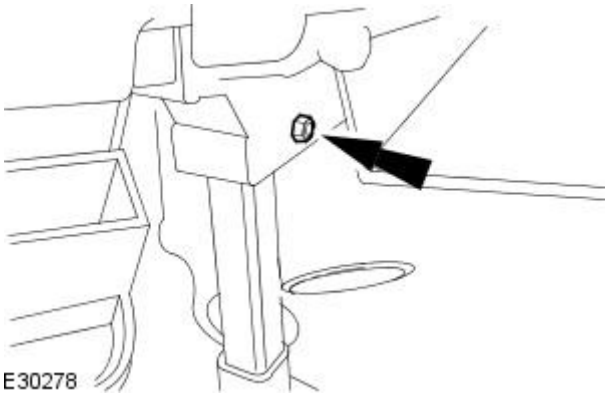


**10.** Remove the steering column pinch bolt.

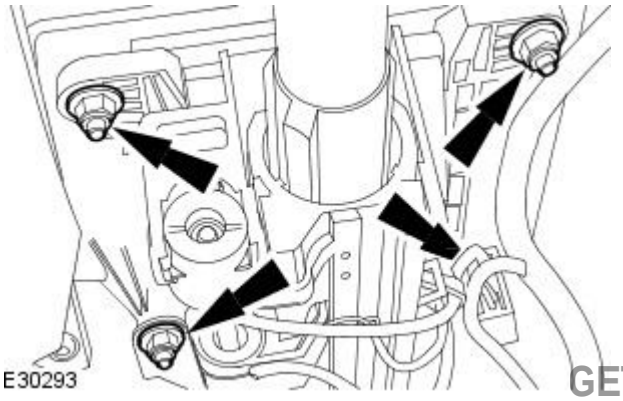


**11.** NOTE: The position of the brake pedal crash bracket.

Detach the steering column.

- Support the weight of the steering column.

GETtheMANUALS.org

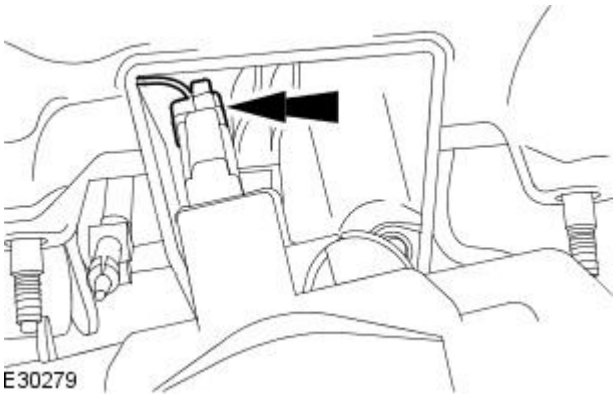


**12.** Disconnect the steering column lock actuator electrical connector.

**13.** Remove the steering column.

## Installation

**1.** If a new steering column is to be installed, record the eleven digit alpha numeric code from the attached bar code label.

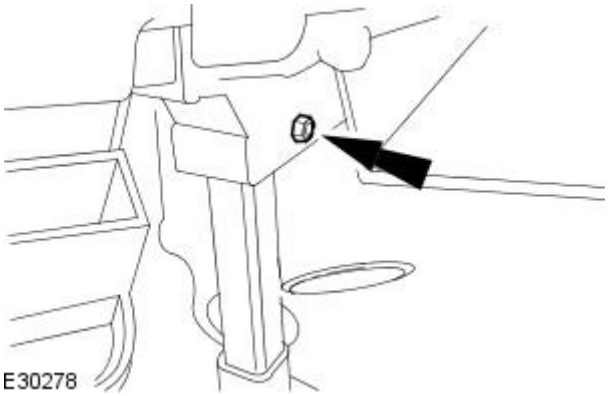


**2.** CAUTION: Make sure the pinch bolt is correctly installed.

Install the steering column.

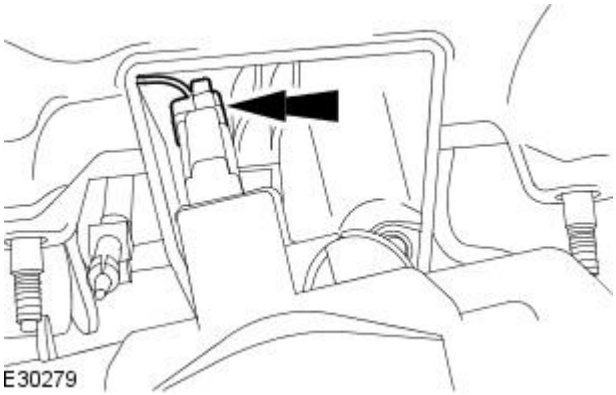


**3.** Connect the steering column lock actuator electrical connector.

GETtheMANUALS.org

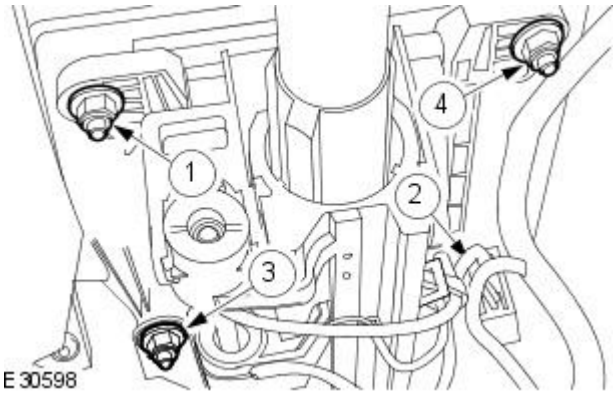


**4.** WARNING: Make sure the brake pedal crash bracket is correctly located. Failure to follow this instruction may result in personal injury.

CAUTION: Make sure the brake pedal crash bracket is correctly located. Failure to follow this instruction may result in component damage.

• NOTE: Tighten the retaining nuts in the sequence shown.

Attach the steering column.

- Tighten to 30 Nm.

• NOTE: If you are re-using this fixing on a vehicle built prior to VIN 83337, then tighten to 25 Nm. If you are replacing a fixing, then you must tighten to 30 Nm.

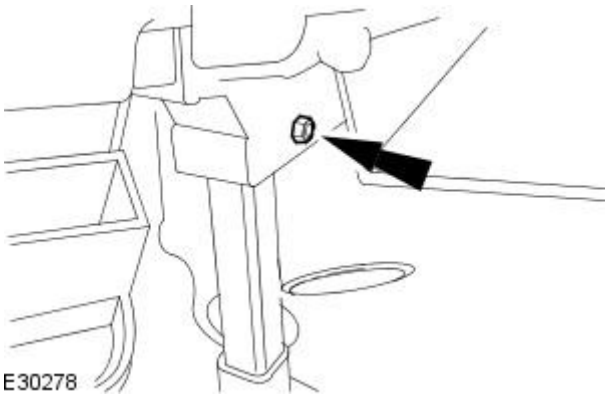


**5.** Tighten to 35 Nm.

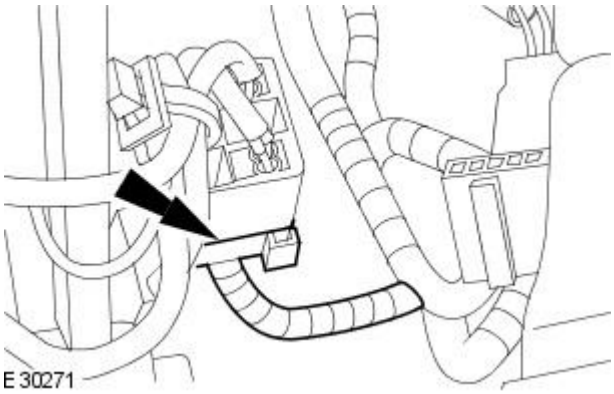


**6.** Connect the steering column electrical connector.

**7.** Attach the left-hand multifunction switch wiring harness.

GETtheMANUALS.org

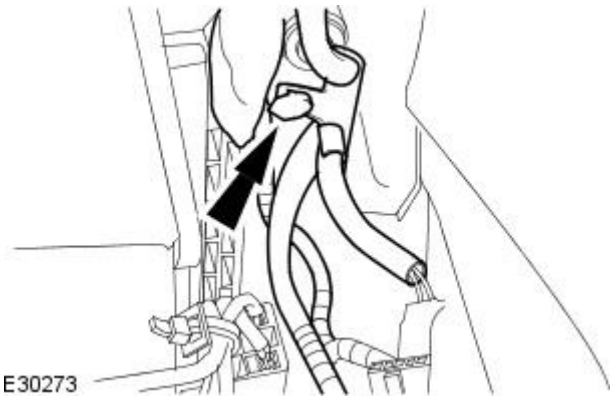


**8.** Attach the right-hand multifunction switch wiring harness.

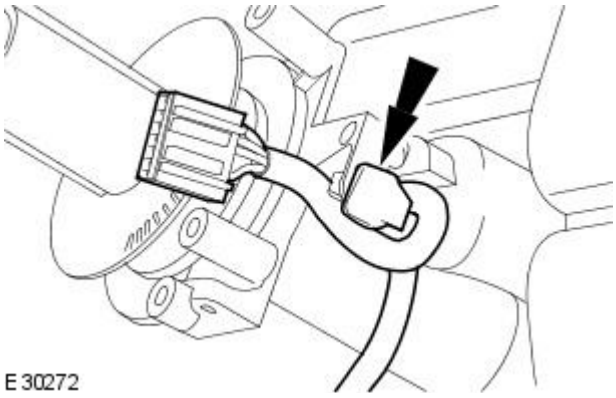


**9.** Attach the right-hand multifunction switch wiring harness.

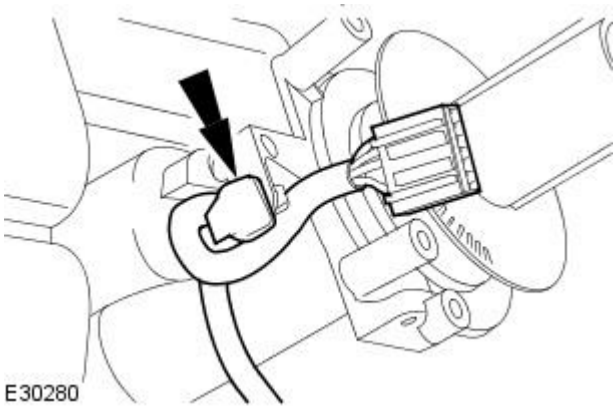


**10.** Attach the left-hand multifunction switch wiring harness.

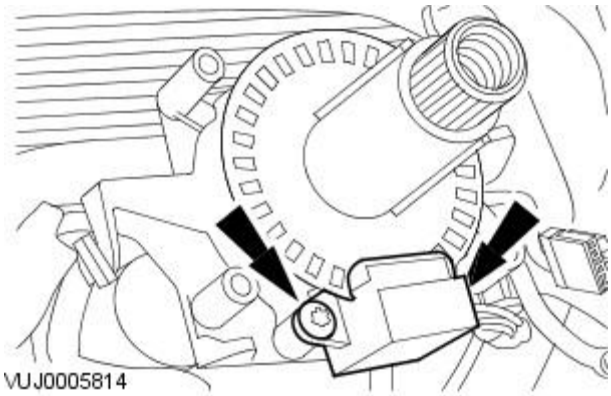


**11.** Install the steering wheel rotation sensor.

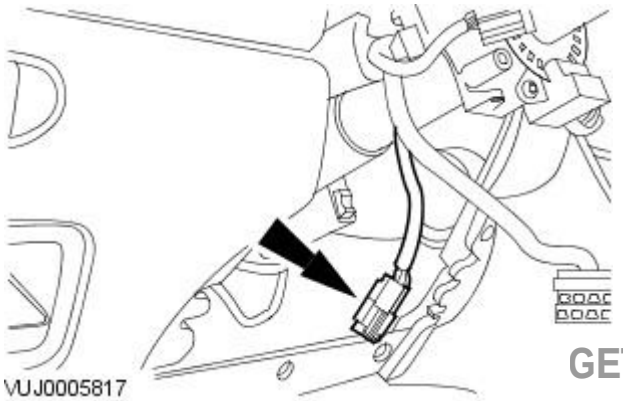


**12.** Connect the steering wheel rotation sensor electrical connector.

GETtheMANUALS.org

13. Install the clockspring.
For additional information, refer to: Clockspring (501-20B Supplemental Restraint System, Removal and Installation).

14. Carry out the steering column calibration application. For further information, refer to the Jaguar approved diagnostic system.

GETtheMANUALS.org

# Steering Column - Steering Wheel

Removal and Installation

| Special Tool(s) | |
|---|---|
| E43628 | Locking Tool<br><br>211-326 |

## Removal

1. Remove the driver air bag module. For additional information, refer to: Driver Air Bag Module (501-20B Supplemental Restraint System, Removal and Installation).
2. Disconnect the electrical connector.

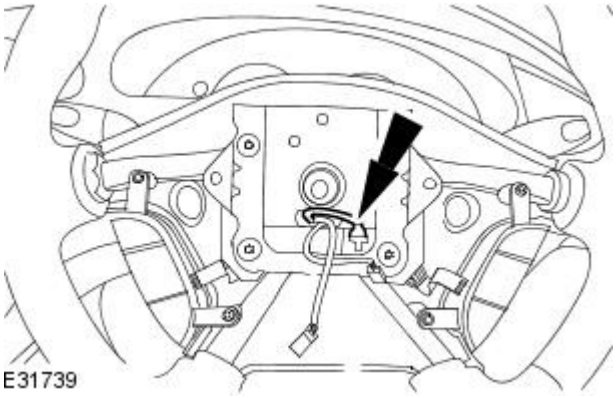


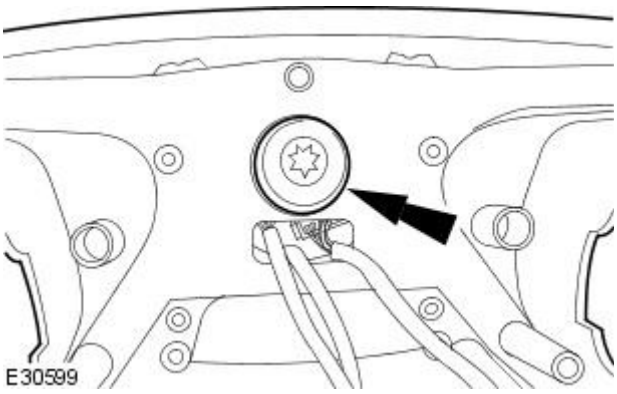


3. CAUTIONS:

Position the front wheels in a straight ahead position and centralize steering wheel. Failure to follow this instruction may result in damage to the clockspring.

Make sure no damage is occured to the electrical connectors. Failure to follow this instruction may result in damage to the vehicle.

Remove the steering wheel.

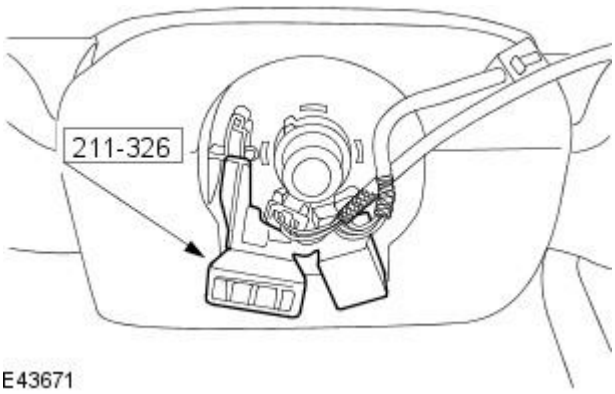


4. CAUTIONS:

Failing to install the special tool to the clockspring may result in damage to the vehicle.

Do not allow the clockspring to unwind.

Install the special tool to the clockspring.

## Installation

1. To install, reverse the removal procedure.

GETtheMANUALS.org

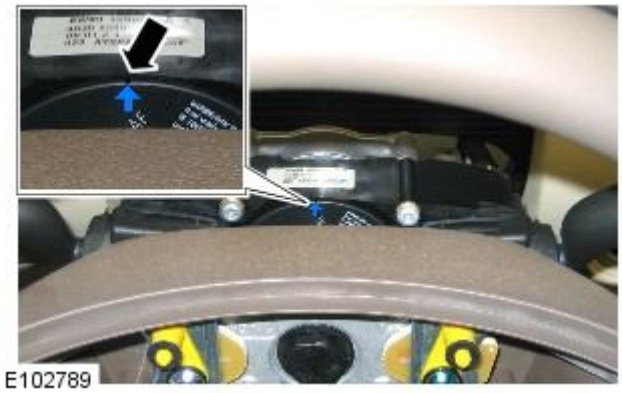


**2.** CAUTION: Make sure that the arrow on the cassette is centered and pointing vertically prior to the steering wheel installation. On removal of the special tool, keep the clockspring cables taught to prevent the cassette moving from the set position. Do not allow the clockspring to unwind. Failure to follow this instruction may result in damage to the component.

Install the steering wheel.

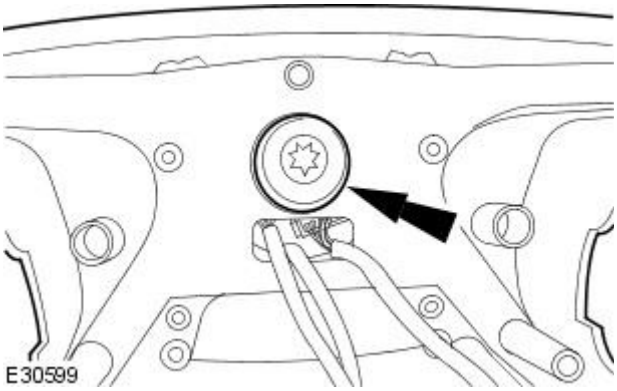


**3.** CAUTION: Check the alignment arrow is still in the vertical position with the wheels straight ahead to make sure that the directional indicator cancellation is central.

Tighten to 65 Nm.

GETtheMANUALS.org

# Steering Column - Steering Column

Disassembly and Assembly

## Disassembly

1. Remove the Steering Column Lock Actuator.
   For additional information, refer to Section 211-05 Steering Column Switches.
2. Detach the wiring harness .

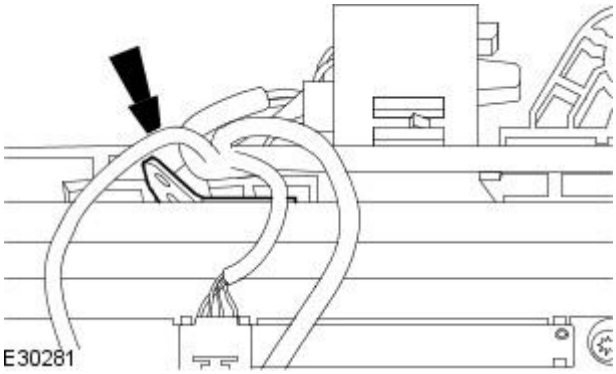


3. Detach the steering column electrical connector housing.

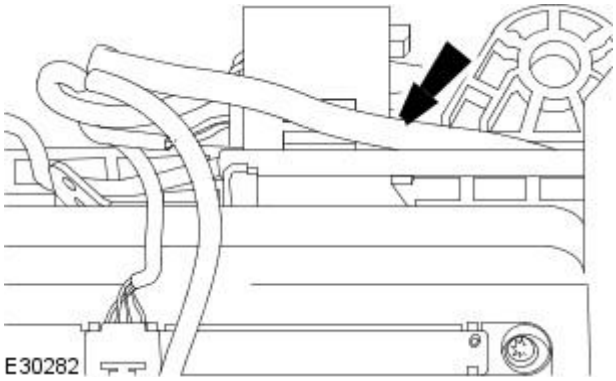


4. Remove the steering column electrical connector housing.
   - Disconnect the electrical connectors.

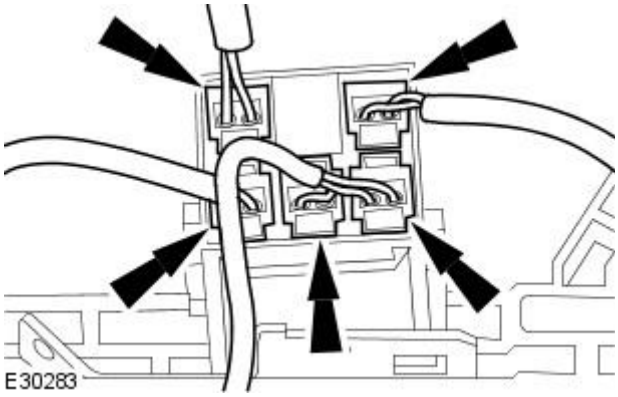


5. NOTE: Remove and discard the tilt solenoid retaining bolts.

   Remove the tilt solenoid.
   - Detach the tilt solenoid wiring harness.

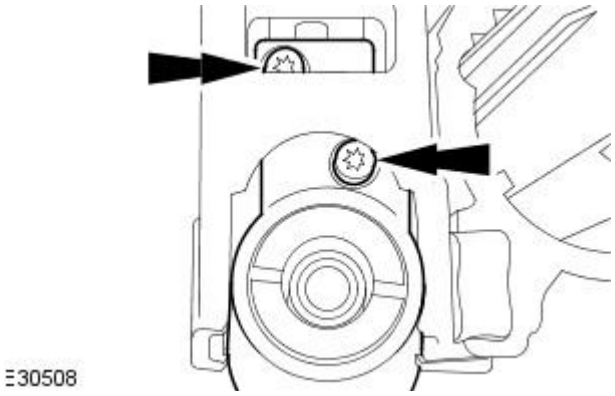


GETtheMANUALS.org

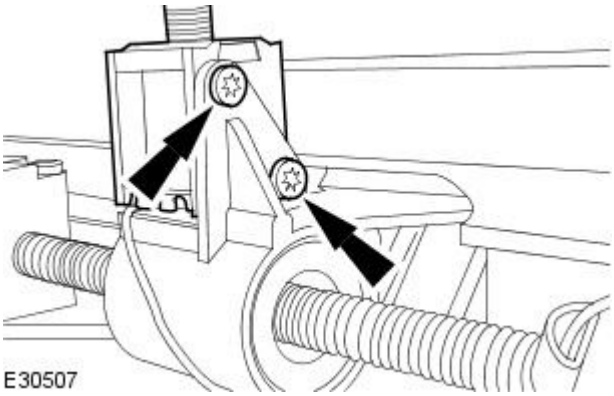


**6.** NOTE: Remove and discard the telescopic solenoid retaining bolts.

Remove the telescopic solenoid.

- Remove and discard the retaining strap.

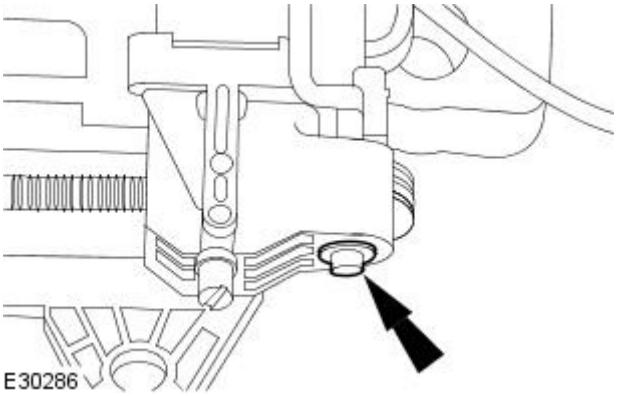


**7.** Remove the tilt/telescopic motor retaining pin.

- Remove and discard the retaining pin and washers.

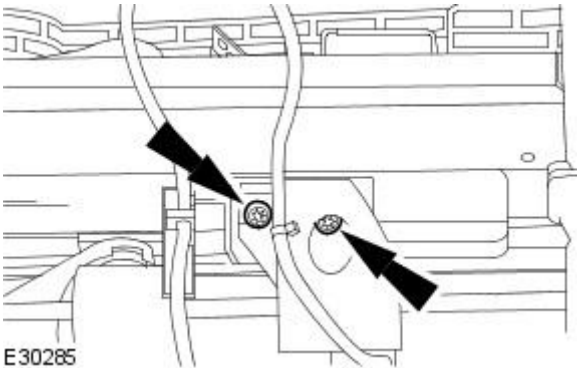


**8.** Remove and discard the telescopic housing retaining bolts.

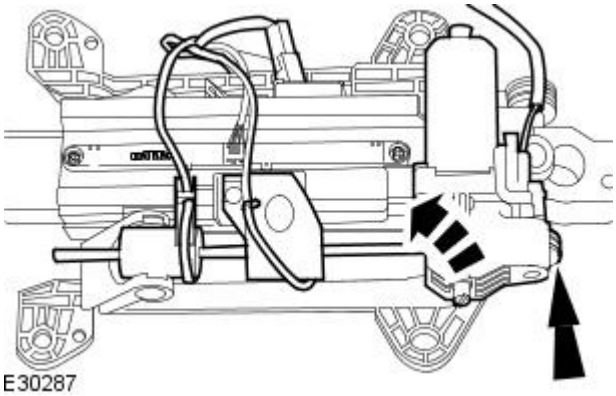


**9.** CAUTION: Make sure the potentiometer sliders are fully disconnected. Failure to follow this instruction may result in component damage.

Reposition the tilt/telescopic motor.

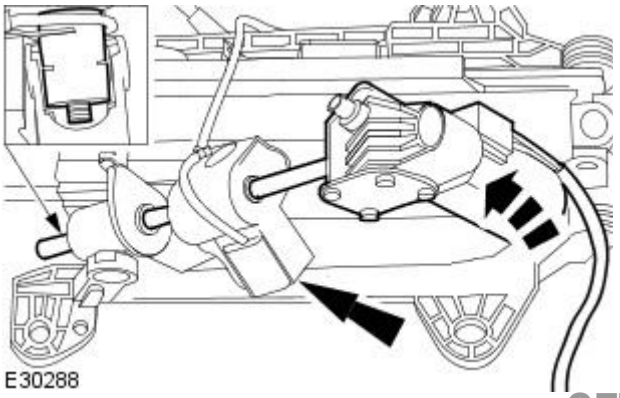


**10.** NOTE: The tilt/telescopic motor will only need to be rotated if the motor is inoperative.

Rotate the tilt/telescopic motor as shown.

- Press the telescopic solenoid engagement pin.

GETtheMANUALS.org

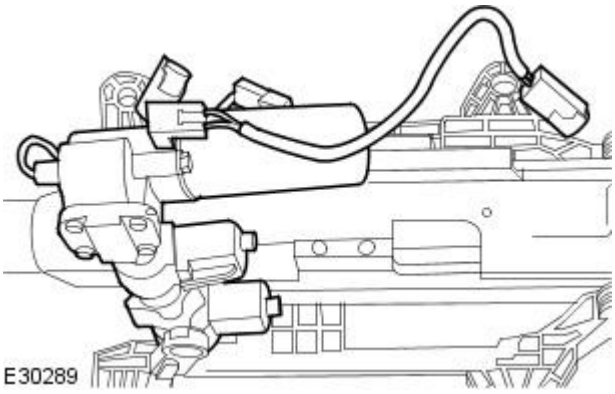


**11.** Remove the tilt/telescopic motor.

## Assembly

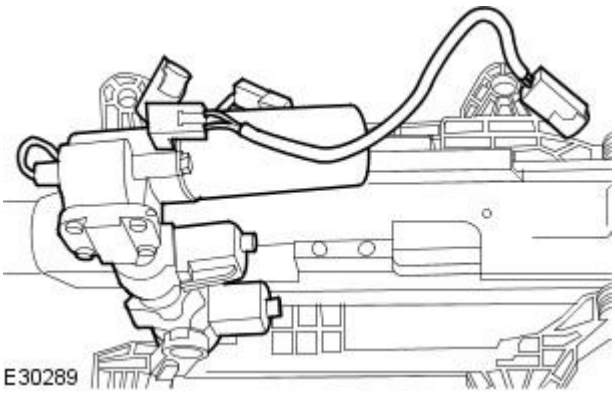


**1.** CAUTION: Make sure the potentiometer sliders are correctly located. Failure to follow this instruction may result in component damage.

Install the tilt/telescopic motor.

- Reposition the tilt/telescopic motor to the steering column.

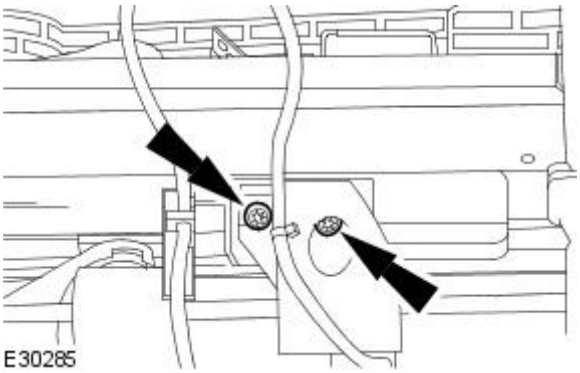


**2.** Install new telescopic housing retaining bolts.

- Tighten to 8 Nm.

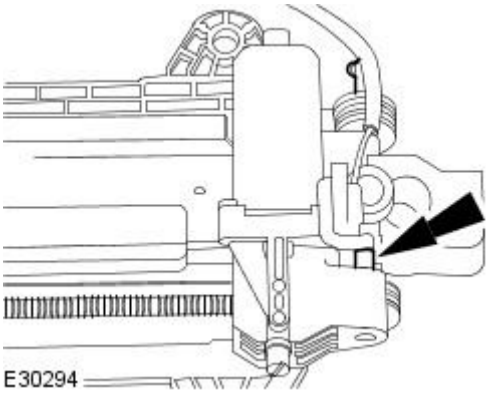


**3.** Install the supplied spacer between the tilt/telescopic motor and steering column.

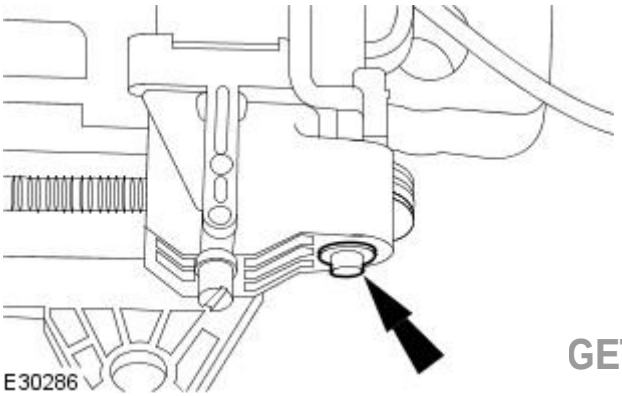


**4.** Install a new tilt/telescopic motor retaining pin and washers.

GETtheMANUALS.org

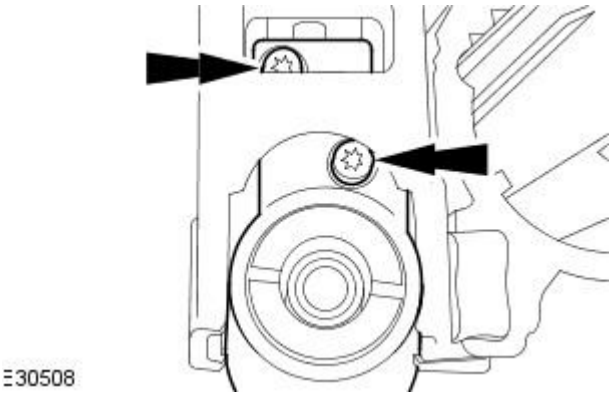


**5.** NOTE: Install new tilt solenoid retaining bolts.

Install the tilt solenoid.

- Tighten to 1 Nm.
- Attach the tilt solenoid wiring harness.

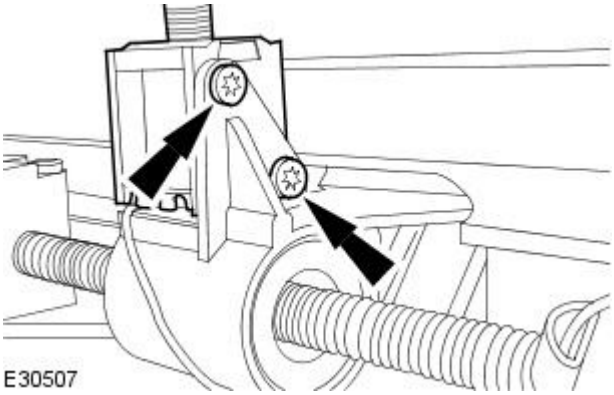


**6.** NOTE: Install new telescopic solenoid retaining bolts.

Install the telescopic solenoid.

- Tighten to 1 Nm.
- Install a new retaining strap.

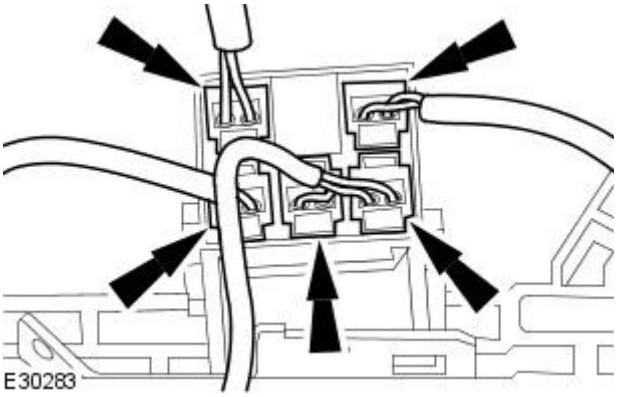


**7.** Install the steering column electrical connector housing.

- Connect the electrical connectors.

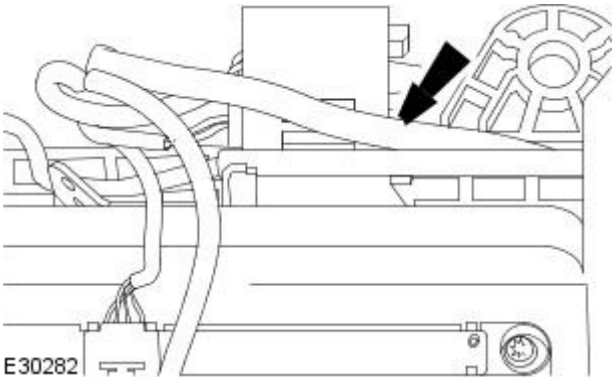


**8.** Attach the steering column electrical connector housing.

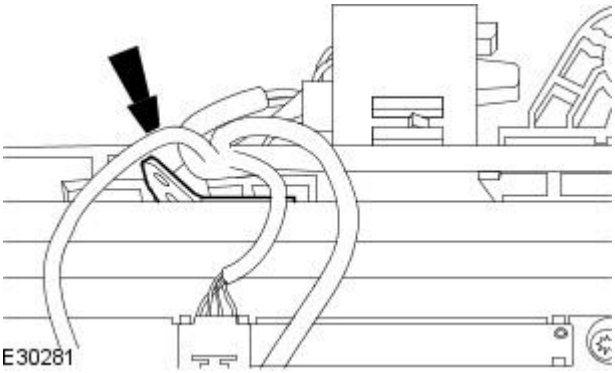


**9.** Attach the wiring harness.

**10.** Install the Steering Column Lock Actuator.
For additional information, refer to Section
211-05 Steering Column Switches

GETtheMANUALS.org

# Steering Column Switches - Steering Column Switches

Description and Operation

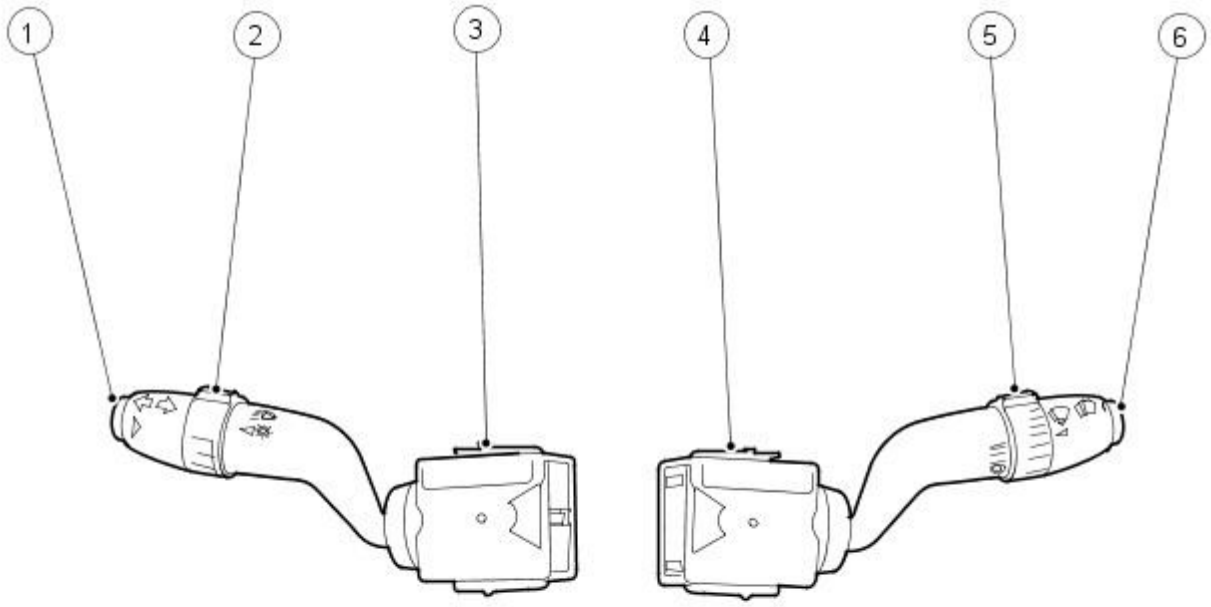


VUJ0005378

| Item | Part Number | Description |
|---|---|---|
| 1 | - | Trip Button |
| 2 | - | Side Lamps/Head Lamps/Auto Lamps and Exit Delay Collar |
| 3 | - | Direction Indicator/Main Beam Switch |
| 4 | - | Wiper Switch |
| 5 | - | Intermittent Wipe Time Delay Collar |
| 6 | - | Wash/Wipe Button |

The multifunction switch is situated on the steering column and consists of the wiper switch and the direction indicator/main beam switch.

## Multifunction switch left-hand

The Multifunction switch LH is on the LH side of the steering column and controls the following functions.

### Direction Indicators

The direction indicators:

- Operate when the ignition switch is in position II.
- Are operated by moving the multifunction switch up or down until it latches in position, to indicate a right or left turn respectively.
- Can be operated while the multifunction switch is held against spring pressure before reaching the latch position.
- Cancel automatically upon completion of a turn. The multifunction switch then returns to the center position.

An audible ticking and a flashing green warning lamp on the instrument cluster indicate that the direction indicators are operating. If an indicator bulb fails, the warning lamp and ticking operate at twice the normal rate and a message will appear on the instrument cluster message center.

### Side Lamps

The Side Lamp function is operated by rotating the multifunction switch collar one position counter clockwise this will then activate the side lamps.

### Head Lamps

The Head Lamp function is operated by rotating the multifunction switch collar two positions counter clockwise this will then activate the head lamps.

### Main Beam

The Main Beam multifunction switch has one pull and one push position. Pulling the main beam multifunction switch toward the driver will cause the main beam lamps to flash. The main beam lamps can be flashed with the ignition on or off and will remain activated as long as the multifunction switch is held.

Pushing the multifunction switch away from the driver to the latch position will operate main beam lamps continuously if the head lamps are on.

### Auto Lamps

The Auto Lamp function is operated by rotating the multifunction switch collar to the auto position. The head lamps will then operate automatically when the sunload sensor detects low light levels.

GETtheMANUALS.org

### Exit Delay

The Exit Delay time can be varied by rotating the multifunction switch collar. Turning the collar clockwise will decrease the exit delay time and turning the collar counter clockwise will increase the exit delay time. The head lamps will stay for a set period of time ranging from 10 seconds to 2 minutes.

### Trip Function

If the Trip Function switch is pressed once, a menu in the instrument cluster message center will be displayed and cycle though an option menu. Pushing and holding the switch resets the mileage calculated in a trip cycle. The trip mileage is displayed in the instrument cluster message center.

## Multifunction switch right-hand

The Multifunction switch right-hand is on the right-hand side of the steering column and controls the following functions.

### Flick Wipe

Flick wipe operation:

- Is obtained by pulling the multifunction switch towards the driver.
- Features a single wipe at normal speed if the multifunction switch is released immediately.
- Features continuous wipe action at fast speed while the multifunction switch position is held.

### Intermittent Wipe

In the intermittent wipe position:

- The wiper operates intermittently, with a variable time delay between wipes.
- The time delay can be varied by rotating the multifunction switch collar, turning the collar clockwise will increase the wiper time delay and turning the collar counter clockwise will decrease the wiper time delay. The switch has 7 positions and wiper delay varies between 3-18 seconds on non-auto rain sensing and has 7 positions on auto rain sensing vehicles with 6-18 seconds wiper delay.

### Slow Speed Wiper

In the slow speed position:

- The wiper operates continuously at slow speed.

### High Speed Wiper

In the high speed position:

- The wiper operates continuously at high speed.

### Windscreen Wash/Wipe

The wash/wipe function:

- Is operated by the button at the end of the multifunction switch.
- Operates the washers and wiper, while the button is pressed, for up to 18 seconds.
- Provides an additional three sweeps of the wiper after the button is released.
- Wash function is disabled if the 'Washer Fluid Low' message is displayed, but wipe operation is still available.

### Head lamp Power Wash (if equipped)

The headlamp power wash function:

- Operates only when the head lamps are on and the windscreen wash/wipe button is pressed.
- Provides two short bursts of approximately 3 seconds apart to the head lamps.
- The powerwash cycle will continue for up to 20 seconds if the wash/wipe button is held .

The headlamp powerwash will operate the first time the wash/wipe button is pressed and thereafter every sixth succeeding wash/wipe operation.

### Moisture Sensitive Wiping (if equipped)

The moisture sensitive wiping function:

- Operates if the collar on the multifunction is set to the auto position.
- Operates if the transmission is in gear.
- Operates if moisture on the windscreen is detected.
- Operates the wipers at varied speeds depending on the amount of moisture detected on the windscreen.
- Operates the wipers at varied speeds depending on the speed of the vehcle.

GETtheMANUALS.org

# Steering Column Switches - Steering Column Switches

Diagnosis and Testing

The complexity of the electronics involved with the various electronic control modules and the multiplexed communication networks, preclude the use of workshop general electrical test equipment. Therefore, reference should be made to the Jaguar approved diagnostic system.

The Jaguar approved diagnostic system systematically tests and analyses all functions of the mulitfunction switch.

Where a fault involving the multifunction switch is indicated by the Jaguar approved diagnostic system, before installing new components, some basic diagnostic methods may be necessary to confirm that connections are good and that wiring is not damaged.

GETtheMANUALS.org

# Steering Column Switches - Steering Column Lock Actuator

Removal and Installation

| Special Tool(s) | |
|---|---|
| 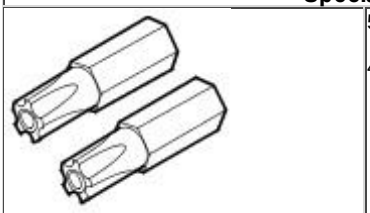 418-535 | 5 point security torx bit<br><br>418-535 |

## Removal

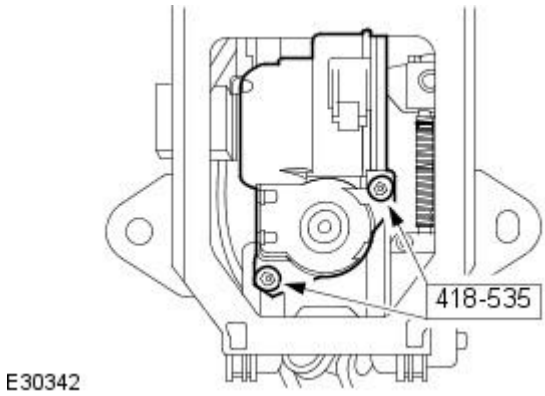

E30342

1. Remove the steering column.
   For additional information, refer to Section 211-04 Steering Column.
2. Remove the steering column lock actuator.
   - Using the special tool, remove the steering column lock actuator retaining bolts.

## Installation

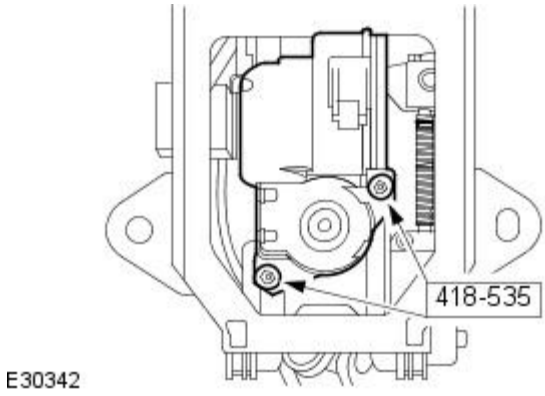

E30342

1. To install, reverse the removal procedure.
   - Tighten to 9 Nm.

GETtheMANUALS.org

# Steering Column Switches - Steering Column Multifunction Switch LH

Removal and Installation

## Removal

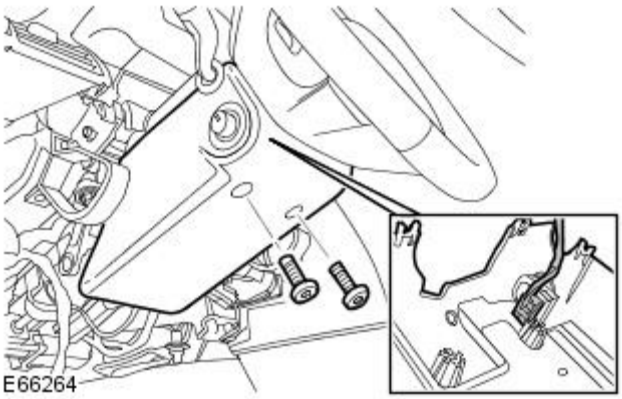


**1.** Remove the steering column lower cowl.

- Remove the 2 screws.
- If installed, disconnect the steering column and foot pedal control switch electrical connector.

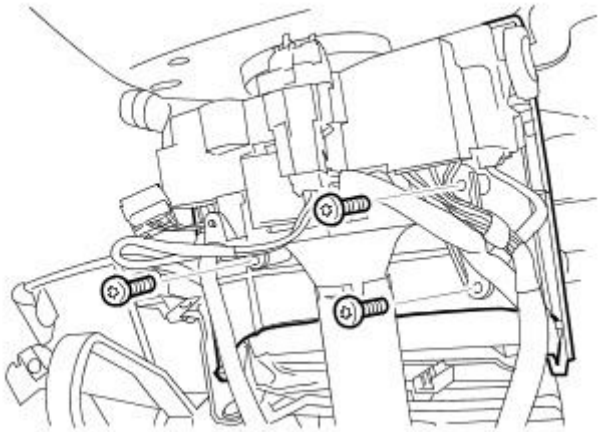

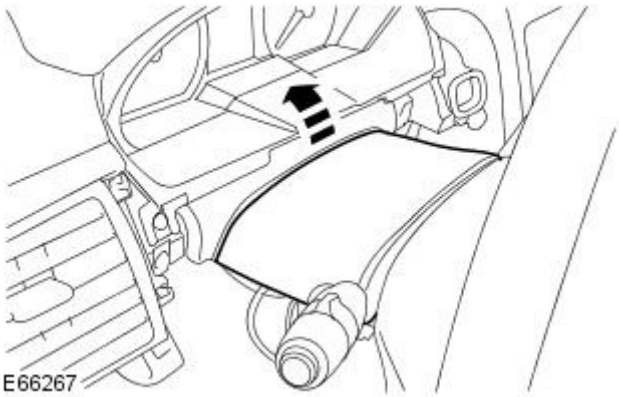


**2.** Remove the steering column upper cowl.

- Remove the 3 screws.

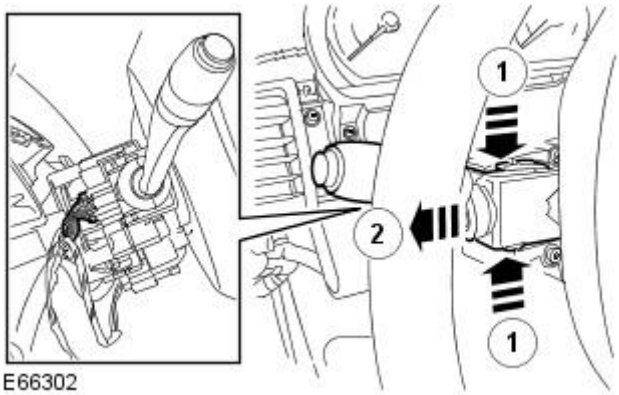


**3.** Remove the steering column multifunction switch.

- Depress the 2 clips.
- Disconnect the electrical connector.

## Installation

**1.** CAUTION: Make sure the electrical harness is not trapped during the installation.

To install, reverse the removal procedure.

GETtheMANUALS.org

# Steering Column Switches - Steering Column Multifunction Switch RH

Removal and Installation

## Removal

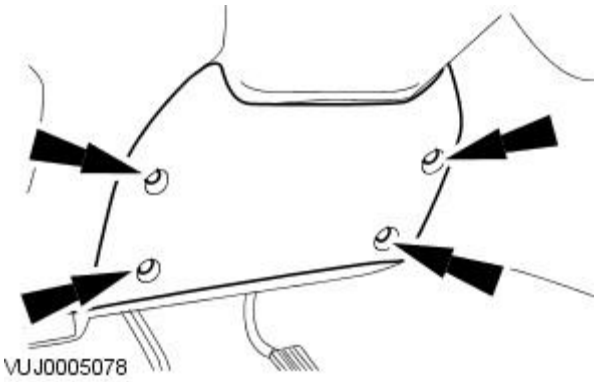


**1.** Remove the instrument panel lower trim.

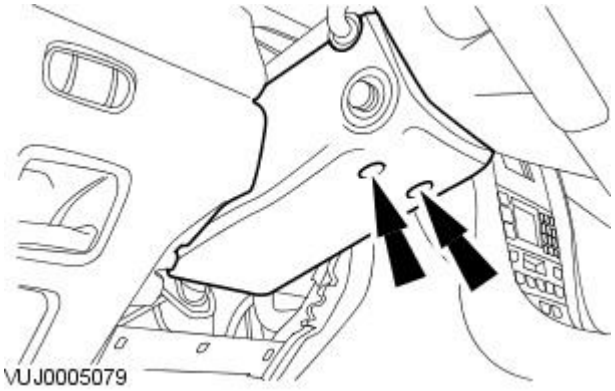


**2.** Detach the steering column lower shroud.

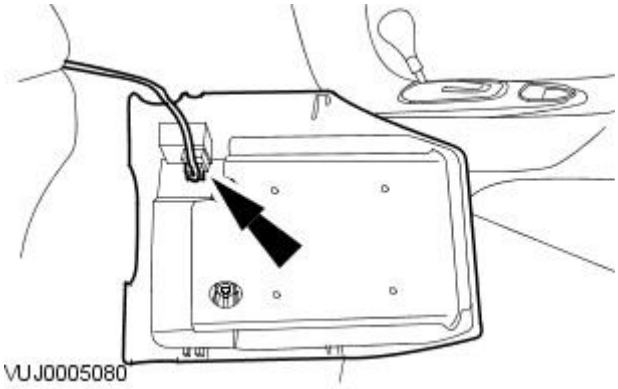


**3.** Remove the steering column lower shroud.

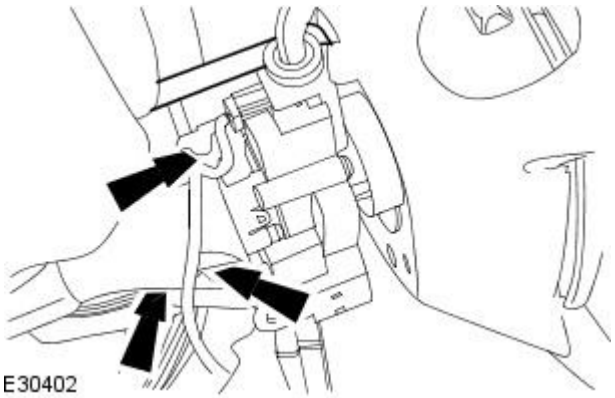


**4.** Remove the steering column upper shroud.

GETtheMANUALS.org

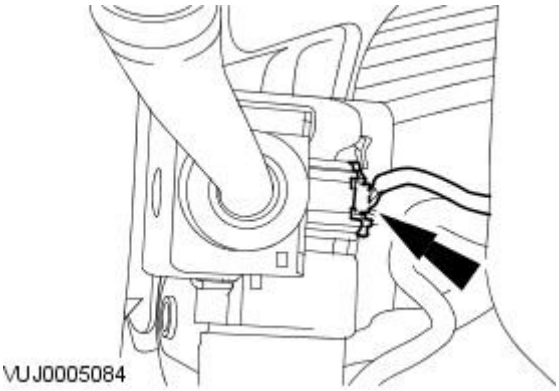


5. Disconnect the steering column multifunction switch RH electrical connector.

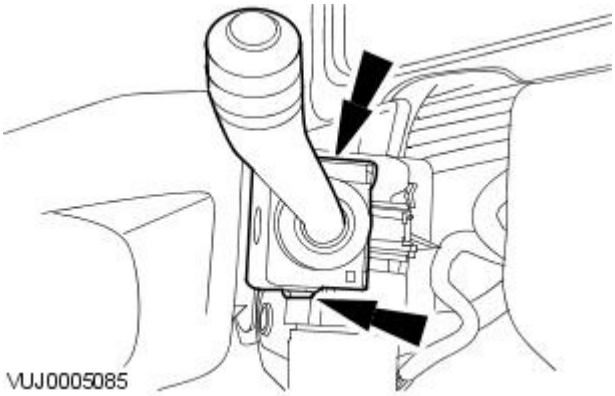


6. Remove the steering column multifunction switch RH switch.

## Installation

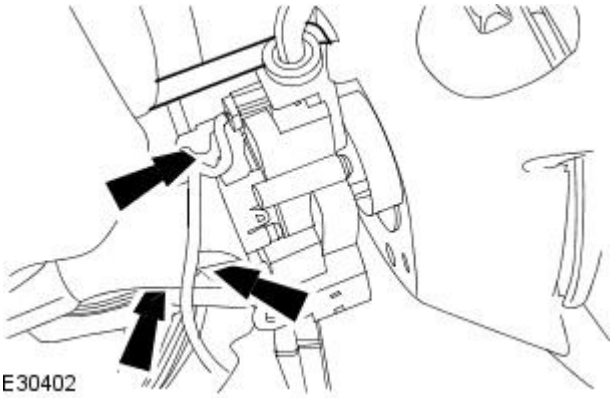


1. To install, reverse the removal procedure.
2. Tighten to 3 Nm.

GETtheMANUALS.org

# Engine System - General Information - EngineV8 4.2L Petrol/V8 S/C 4.2L Petrol/2.5L NA V6 - AJV6/3.0L NA V6 - AJ27

Diagnosis and Testing

## Inspection and Verification

Since diagnosis and testing actually begins when repairs are taken on, the following procedure is recommended.

1. **1.** Verify the customer concern by operating the system.
2. **2.** Visually inspect for obvious signs of mechanical damage or electrical damage. If the concern cannot be reproduced, carry out a road test and/or visual check with the aid of the following table.

**Visual Inspection Chart**

| Mechanical |
|---|
| ○ Coolant leaks<br>○ Oil leaks<br>○ Leaks in the fuel system<br>○ Visibly damaged or worn parts<br>○ Loose or missing nuts or bolts |

3. **3.** If an obvious cause for an observed or reported concern is found, correct the cause (if possible) before proceeding to the next step.
4. **4.** If the concern is not visually evident, verify the symptom and refer to the Symptom Chart.

## Symptom Chart

**Symptom Chart**

| Symptom | Possible Sources | Action |
|---|---|---|
| Difficult to start during hot or cold start | * Piston ring(s) worn, damaged, sticking or worn piston/cylinder. | * INSTALL a new engine. |
| | * Head gasket damaged. | * INSPECT the head gasket. |
| | * Fuel system damaged or inoperative. | * REFER to Section 303-04A Fuel Charging and Controls / 303-04B Fuel Charging and Controls / 303-04C Fuel Charging and Controls / 303-04D Fuel Charging and Controls - Turbocharger. Or REFER to Section 303-04A Fuel Charging and Controls / 303-04B Fuel Charging and Controls / 303-04C Fuel Charging and Controls / 303-04D Fuel Charging and Controls - Turbocharger. |
| | * Ignition system inoperative. | * REFER to Section 303-07A Engine Ignition / 303-07B Engine Ignition / 303-07C Glow Plug System. Or REFER to Section 303-07A Engine Ignition / 303-07B Engine Ignition / 303-07C Glow Plug System. |
| Poor Idling | * Restricted exhaust system. | * INSPECT the exhaust system.<br>REFER to Section 309-00 Exhaust System. |
| | * Vacuum leak. | * CARRY out the Intake Manifold Vacuum Test in this section. REPAIR and INSTALL new components as necessary. |
| | * Burned valve(s). | * INSPECT the valve(s). |
| | * Incorrect valve to valve seat contact. | * INSPECT the valve and valve seat. |
| | * Head gasket damaged. | * INSPECT the head gasket. |
| | * Fuel system damaged or inoperative. | * REFER to Section 303-04A Fuel Charging and Controls / 303-04B Fuel Charging and Controls / 303-04C Fuel Charging and Controls / 303-04D Fuel Charging and Controls - Turbocharger. Or REFER to Section 303-04A Fuel Charging and Controls / 303-04B Fuel Charging and Controls / 303-04C Fuel Charging and Controls / 303-04D Fuel Charging and Controls - Turbocharger. |
| Insufficient power | * Compression leakage from valve seat. | * INSPECT the valve or valve seat. |
| | * Valve sticking. | * INSPECT valve stem to valve guide clearance or carbon accumulation. |
| | * Valve spring weak or broken. | * INSPECT the valve spring. |
| | * Head gasket damaged. | * INSPECT the head gasket. |
| | * Cylinder head cracked or distorted. | * INSPECT the cylinder head. |
| | * Piston ring(s) worn, damaged or sticking. | * INSTALL a new engine. |
| | * Fuel system damaged or inoperative. | * REFER to Section 303-04A Fuel Charging and Controls / 303-04B Fuel Charging and Controls / 303-04C Fuel Charging and Controls / 303-04D Fuel Charging and Controls - Turbocharger. Or REFER to Section 303-04A Fuel Charging and Controls / 303-04B Fuel Charging and Controls / 303-04C Fuel Charging and Controls / 303-04D Fuel Charging and Controls - Turbocharger. |
| | * Brakes dragging. | * REFER to Section 206-00 Brake System - General Information. |
| | * Restricted exhaust system. | * INSPECT the exhaust system.<br>REFER to Section 309-00 Exhaust System. |
| Excessive or insufficient compression. | * Valve(s) burnt or sticking. | * INSPECT the valve(s). |
| | * Valve spring(s) weak or broken. | * INSPECT the valve spring(s). |
| | * Piston ring(s) worn, damaged, sticking or worn piston/cylinder. | * INSTALL a new engine. |
| | * Head gasket damaged. | * INSPECT the head gasket. |
| | * Carbon accumulation in combustion chamber. | * ELIMINATE carbon build up. |

GETtheMANUALS.org

| | | |
|---|---|---|
| | * Fuel system damaged or inoperative. | * REFER to Section 303-04A Fuel Charging and Controls / 303-04B Fuel Charging and Controls / 303-04C Fuel Charging and Controls / 303-04D Fuel Charging and Controls - Turbocharger. Or REFER to Section 303-04A Fuel Charging and Controls / 303-04B Fuel Charging and Controls / 303-04C Fuel Charging and Controls / 303-04D Fuel Charging and Controls - Turbocharger. |
| Excessive oil consumption | * Piston ring(s) worn, damaged, sticking or worn piston/cylinder. | * INSTALL a new engine. |
| | * Valve stem seal worn or missing. | * INSPECT the valve or valve stem seal. |
| | * Oil leakage. | * REPAIR oil leakage. |
| | * Valve stem or valve guide worn. | * INSPECT the valve stem or valve guide. |
| | * Incorrect oil viscosity. | * DRAIN and FILL with new oil. |
| | * Diluted oil. | * CHECK oil dilution. DRAIN and FILL as necessary. |
| | * Crankcase overfilled. | * CHECK and adjust the oil level. |
| | * Incorrect oil pressure. | * CHECK the oil pressure. REPAIR as necessary. |
| Engine noise | * Excessive crankshaft main bearing clearance. | * INSTALL a new engine. |
| | * Excessive crankshaft end play. | * INSTALL a new engine. |
| | * Excessive connecting rod bearing oil clearance. | * INSTALL a new engine. |
| | * Piston/cylinder worn. | * INSTALL a new engine. |
| | * Piston ring damaged. | * INSTALL a new engine. |
| | * Connecting rod bent. | * INSTALL a new engine. |
| | * Valve spring(s) broken. | * INSPECT the valve spring(s). |
| | * Excessive valve guide clearance. | * INSPECT the valve guide or valve. |
| | * Cooling system inoperative (water pump, vibration of radiator), | * Refer to Section 303-03A Engine CoolingSection 303-03B Supercharger CoolingSection 303-03C Engine Cooling |
| | * Fuel system inoperative. | * REFER to Section 303-04A Fuel Charging and Controls / 303-04B Fuel Charging and Controls / 303-04C Fuel Charging and Controls / 303-04D Fuel Charging and Controls - Turbocharger. Or REFER to Section 303-04A Fuel Charging and Controls / 303-04B Fuel Charging and Controls / 303-04C Fuel Charging and Controls / 303-04D Fuel Charging and Controls - Turbocharger. |
| | * Excessive carbon buildup. | * ELIMINATE carbon buildup. |
| | * Exhaust gas leakage. | * REPAIR leakage.<br>REFER to Section 309-00 Exhaust System. |
| | * Incorrect drive belt tension. | * INSPECT the drive belt tension.<br>REFER to Section 303-05 Accessory Drive. |
| | * Generator front bearing worn. | * REFER to Section 414-02 Generator and Regulator. |
| Tappet noise, engine running | * Incorrect tappet clearance. | * CHECK and ADJUST the tappet clearance as necessary. |

## Component Tests

### Engine Oil Leaks

• NOTE: Before installing new gaskets or oil seals, make sure that the fault is clearly established.

If the oil leak cannot be identified clearly by a visual inspection, carry out an UV test:

### Fluorescent Oil Additive Method

1. **1.** Clean the engine with a suitable cleaning fluid (brake cleaner).
2. **2.** Drain the engine oil and refill with recommended oil, premixed with Diesel Engine Oil Dye or equivalent. Use a minimum 14.8 ml (0.5 ounce) to a maximum 29.6 ml (1 ounce) of fluorescent additive to all engines. If oil is not premixed, fluorescent additive must first be added to the crankcase.
3. **3.** Run engine for 15 minutes. Stop the engine and inspect all seal and gasket areas for leaks using a 12 Volt Master UV Diagnostic Inspection Kit or equivalent. A clear bright yellow or orange area will identify leak. For extremely small leaks, several hours may be required for the leak to appear.
4. **4.** As necessary, pressurize the main oil gallery system to locate leaks due to incorrectly sealed, loose or cocked plugs. If the flywheel bolts leak oil, look for sealer on the threads.
5. **5.** Repair all leaks as necessary.

## Compression Test

### General Remarks

• NOTE: Removing fuses and disconnecting electrical components causes the engine control module (ECM) to log an error message. After the measurements have been carried out this error message should be cleared from memory by connecting to the Jaguar Approved Diagnostic System.

• NOTE: Only check the compression pressure with the valves set to the prescribed clearance (if this can be adjusted).

The compression pressure should be checked with the engine at operating temperature.

### Check The Compression Pressure

GETtheMANUALS.org

WARNING: On manual transmissions shift the transmission into neutral. On automatic transmission vehicles, select "P". Failure to follow these instructions may result in personal injury.

1. **1.** Remove the fuel pump relay.
2. **2.** Start the engine - the engine will start, run for a few seconds then stall.
3. **3.** Remove the spark plugs.
4. **4.** Install the compression tester.
5. **5.** Install an auxiliary starter switch in the starting circuit. With the ignition switch OFF, using the auxiliary starter switch, crank the engine a minimum of five compression strokes and record the highest reading. Note the approximate number of compression strokes required to obtain the highest reading.
6. **6.** Repeat the test on each cylinder, cranking the engine approximately the same number of compression strokes.
7. **7.** Install the components in reverse order, observing the specified tightening torques.
8. **8.** Reset the ECM fault memory.

### Interpretation of the Results

The indicated compression pressure are considered within specification if the lowest reading cylinder is within 75% of the highest reading.

CAUTION: If engine oil is sprayed into the combustion chamber, after carrying out the measurement run the engine at 2000 rpm for about 15 minutes, in order to burn the oil and prevent damage to the catalytic converter.

If the measurement on one or more cylinders is much lower than the specified value, spray some engine oil into the combustion chamber and repeat the compression measurement.

If the reading greatly improves then the piston rings are damaged.

If the reading stays the same then the cause is either damaged valve seats or valve stem seals.

If the measurements for two cylinders next to each other are both too low then it is very likely that the cylinder head gasket between them is burnt through. This can also be recognized by traces of engine oil in the coolant and/or coolant in the engine oil.

## Excessive Engine Oil Consumption

The amount of oil an engine uses will vary with the way the vehicle is driven in addition to normal engine-to-engine variation. This is especially true during the first 16,100 km (10,000 miles) when a new engine is being broken in or until certain internal components become conditioned. Vehicles used in heavy-duty operation may use more oil. The following are examples of heavy-duty operation:

- Trailer towing applications.
- Severe loading applications.
- Sustained high speed operation.

Engines need oil to lubricate the following internal components:

- Cylinder block cylinder walls.
- Pistons and piston rings.
- Intake and exhaust valve stems.
- Intake and exhaust valve guides.
- All internal engine components.

When the pistons move downward, a thin film of oil is left on the cylinder walls. As the vehicle is operated, some oil is also drawn into the combustion chambers past the intake and exhaust valve stem seals and burned.

The following is a partial list of conditions that can affect oil consumption rates:

- Engine size.
- Operator driving habits.
- Ambient temperatures.
- Quality and viscosity of oil.

Operation under varying conditions can frequently be misleading. A vehicle that has been run for several thousand miles on short trips or in below-freezing ambient temperatures may have consumed a "normal" amount of oil. However, when checking the engine oil level, it may measure up to the full mark on the oil level indicator due to dilution (condensation and fuel) in the engine crankcase. The vehicle then might be driven at high speeds on the highway where the condensation and fuel boil off. The next time the engine oil is checked it may appear that a liter of oil was used in about 160 km (100 miles) per liter oil consumption rate is about 2,400 km (1,500 miles) per liter.

Make sure the selected engine oil meets Jaguar specification and the recommended API performance category "SG" and SAE viscosity grade as shown in the vehicle Owner's Guide. It is also important that the engine oil is changed at the intervals specified for the typical operating conditions.

## Oil Consumption Test

The following diagnostic procedure is used to determine the source of excessive oil consumption.

• NOTE: Oil use is normally greater during the first 16,100 km (10,000 miles) of service. As mileage increases, oil use decreases. Vehicles in normal service should get a least 16,000 km (10,000 miles) per liter. High speed driving, towing, high ambient temperature and other factors may result in greater oil use.

1. **1.** Define excessive consumption, such as the number of miles driven per liter of oil used. Also determine customers's driving habits, such as sustained high speed operation, towing, extended idle and other considerations.
2. **2.** Verify that the engine has no external oil leaks as described under Engine Oil Leaks.
3. **3.** Verify that the engine has the correct oil level.
4. **4.** Verify that the engine is not being run in an overfilled condition. Check the oil level at least five minutes after a hot shutdown with the vehicle parked on a level surface. In no case should the level be above the top of the cross-hatched area and the letter "F" in FULL. If significantly overfilled, carry out step 5, sub steps 1 through 4.
5. **5.** Carry out an oil consumption test:

GETtheMANUALS.org

1. Drain engine oil and fill with one liter less than the recommended amount.
2. Run the engine for three minutes (10 minutes if cold), and allow oil to drain back for at least five minutes with vehicle parked on level surface.
3. Remove the oil level indicator and wipe clean. (Do not wipe with anything contaminated with silicone compounds.) Install the oil level indicator making sure to seat the oil level indicator firmly in the oil level indicator tube. Remove the oil level indicator and draw a mark on the back (unmarked) surface at the indicated oil level. (This level should be about the same as the ADD mark on the face of the oil level indicator.)
4. Add one liter of oil. Start the engine and allow to idle for at least two minutes. Shut off the engine and allow the engine oil to drain back for at least five minutes. Mark the oil level dipstick, using the procedure above. (This level may range from slightly below the top of the cross-hatched area to slightly below the letter "F" in FULL.
5. Record the vehicles mileage.
6. Instruct the customer to drive the vehicle as usual and:
    1. Check the oil level regularly at intervals of 160-240 km (100-150 miles).
    2. Return to the service point when the oil level drops below the lower (ADD) mark on the oil level indicator.
    3. Add only full liters of the same oil in an emergency. Note the mileage at which the oil is added.
7. Check the oil level under the same conditions and at the same location as in steps 3 and 4.
    1. Measure the distance from the oil level to the UPPER mark on the oil level indicator and record.
    2. Measure the distance between the two scribe marks and record.
    3. Divide the first measurement by the second.
    4. Divide the distance driven during the oil test by the result. This quantity is the approximate oil consumption rate in kilometers per liter or in mile per quart.
    5. If the oil consumption rate is unacceptable go to Step 6.

6. **6.** Check the positive crankcase ventilation (PCV) system. Make sure the system is not plugged.
7. **7.** Check for plugged oil drain-back holes in the cylinder head and cylinder block.
8. **8.** If the condition still exists after carrying out the above tests go to step 9.
9. **9.** Carry out a cylinder compression test. Refer to the procedure in this section : Compression Test. This can help determine the source of oil consumption such as valves, piston rings or other areas.
10. **10.** Check valve guides for excessive guide clearance. Install new valve stem seals after verifying valve guide clearance.
11. **11.** Worn or damaged internal engine components can cause excessive oil consumption. Small deposits of oil on the tips of the spark plugs can be a clue to internal oil consumption.

## Intake Manifold Vacuum Test

Bring the engine to normal operating temperature. Connect a vacuum gauge or equivalent to the intake manifold. Run the engine at the specified idle speed.

The vacuum gauge should read between 51-74 kPa (15-22 in-Hg) depending upon the engine condition and the altitude at which the test is performed. Subtract 4.0193 kPa (1 in-Hg) from the specified reading for every 304.8 m (1,000 feet) of elevation above sea level.

The reading should be steady. As necessary, adjust the gauge damper control (where used) if the needle is fluttering rapidly. Adjust damper until needle moves easily without excessive flutter.

### Interpreting Vacuum Gauge Readings

A careful study of the vacuum gauge reading while the engine is idling will help pinpoint trouble areas. Always conduct other appropriate tests before arriving at a final diagnostic decision. Vacuum gauge readings, although helpful, must be interpreted carefully.

Most vacuum gauges have a normal band indicated on the gauge face.

The following are potential gauge readings. Some are normal; others should be investigated further.

GETtheMANUALS.org

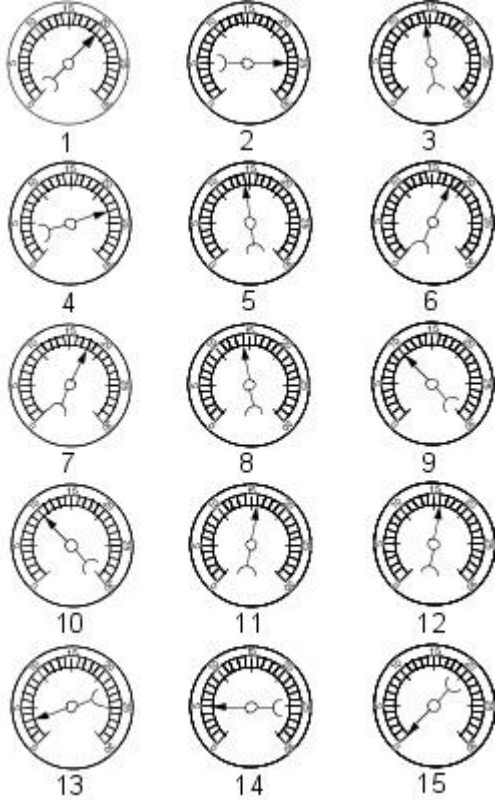


VUJ0001694

1. **1.** NORMAL READING: Needle between 51-74 kPa (15-22 in-Hg) and holding steady.
2. **2.** NORMAL READING DURING RAPID ACCELERATION : When the engine is rapidly accelerated (dotted needle), the needle will drop to a low (not to zero) reading . When the throttle is suddenly released, the needle will snap back up to a higher than normal figure.
3. **3.** NORMAL FOR HIGH-LIFT CAMSHAFT WITH LARGE OVERLAP: The needle will register as low as 51 kPa (15 in-Hg) but will be relatively steady. Some oscillation is normal.
4. **4.** WORN RINGS OR DILUTED OIL: When the engine is accelerated (dotted needle), the needle drops to 0 kPa (0 in-Hg). Upon deceleration, the needle runs slightly above 74 kPa (22 in-Hg).
5. **5.** STICKING VALVES: When the needle (dotted) remains steady at a normal vacuum but occasionally flicks (sharp, fast movement) down and back about 13 kPa (4 in-Hg), one or more valves may be sticking.
6. **6.** BURNED OR BENT VALVES: A regular, evenly-spaced, downscale flicking of the needle indicates one or more burned or damaged valves. Insufficient hydraulic valve tappet or hydraulic lash adjuster clearance will also cause this reaction.
7. **7.** POOR VALVE SEATING: A small but regular downscale flicking can mean one or more valves are not seating correctly.
8. **8.** WORN VALVE GUIDES: When the needle oscillates over about a 13 kPa (4 in-Hg) range at idle speed, the valve guides could be worn. As engine speed increases, the needle will become steady if guides are responsible.
9. **9.** WEAK VALVE SPRINGS: When the needle oscillation becomes more violent as engine RPM is increased, weak valve springs are indicated. The reading at idle could be relatively steady.
10. **10.** LATE VALVE TIMING: A steady but low reading could be caused by late valve timing.
11. **11.** IGNITION TIMING RETARDING: Retarded ignition timing will produce a steady but somewhat low reading.
12. **12.** INSUFFICIENT SPARK PLUG GAP: When spark plugs are gapped too close, a regular, small pulsation of the needle can occur.
13. **13.** INTAKE LEAK: A low, steady reading can be caused by an intake manifold or throttle body gasket leak.
14. **14.** BLOWN HEAD GASKET: A regular drop of fair magnitude can be caused by a blown head gasket or warped cylinder head to cylinder block surface.
15. **15.** RESTRICTED EXHAUST SYSTEM: When the engine is first started and is idled, the reading may be normal, but as the engine RPM is increased, the back pressure caused by a clogged muffler, kinked tail pipe or other concerns will cause the needle to slowly drop to 0 kPa (0 in-Hg). The needle then may slowly rise. Excessive exhaust clogging will cause the needle to drop to a low point even if the engine is only idling.

When vacuum leaks are indicated, search out and correct the cause. Excess air leaking into the system will upset the fuel mixture and cause concerns such as rough idle, missing on acceleration or burned valves. If the leak exists in an accessory such as the power brake booster, the unit will not function correctly. Always repair vacuum leaks.

GETtheMANUALS.org

# Engine System - General Information - Engine2.7L V6 - TdV6

Diagnosis and Testing

## Inspection and Verification

1. **1.** Verify the customer concern. Concerns have been separated into **Leaks** and **noise vibration and harshness (NVH)** for ease of use.
2. **2.** Visually inspect for obvious signs of mechanical or electrical damage.

   **2.** If an obvious cause for an observed or reported concern is found, correct the cause (if possible) before proceeding to the next step.
3. **3.** If the concern is not visually evident, verify the symptom and refer to the Symptom Chart.

**Visual Inspection Chart**

| Mechanical |
|---|
| • Coolant level<br>• Coolant leaks,<br>REFER to: Engine Cooling (303-03C Engine Cooling - 2.7L V6 - TdV6, Diagnosis and Testing).<br>• Oil level<br>• Oil leaks<br>• Visibly damaged or worn parts<br>• Loose or missing nuts or bolts |

## Symptom charts

**Symptom chart, leaks**

| Symptom | Possible cause | Action |
|---|---|---|
| External coolant leaks | • Damaged hose(s)<br>• Damaged expansion tank<br>• Damaged radiator<br>• Leaking seals/gaskets<br>• Cracked/damaged casings | For cooling system checks,<br>REFER to: Engine Cooling (303-03C Engine Cooling - 2.7L V6 - TdV6, Diagnosis and Testing). |
| Internal coolant leaks Note: This may be indicated by the production of white smoke from the exhaust. | • Leaking seals/gaskets<br>• Cracked/damaged casings | For cooling system checks,<br>REFER to: Engine Cooling (303-03C Engine Cooling - 2.7L V6 - TdV6, Diagnosis and Testing). |
| Engine overheats | • Insufficient coolant<br>• Insufficient oil<br>• Pressure cap fault<br>• Thermostat not opening<br>• Coolant pump failure<br>• Cooling fan failure | For cooling system checks,<br>REFER to: Engine Cooling (303-03C Engine Cooling - 2.7L V6 - TdV6, Diagnosis and Testing). |
| Engine takes too long to reach operating temperature | • Thermostat stuck open | For cooling system checks,<br>REFER to: Engine Cooling (303-03C Engine Cooling - 2.7L V6 - TdV6, Diagnosis and Testing). |
| External oil leaks | • Gaskets<br>• Seals<br>• Hoses<br>• Oil filter<br>• Oil cooler<br>• Damaged/Cracked casings<br>• Crankcase ventilation system<br>• Piston ring blow-by | Clean and confirm the area of the leak. Check the visual condition of oil carrying components. Check the crankcase ventilation system,<br>REFER to: Engine Emission Control (303-08B Engine Emission Control - 2.7L V6 - TdV6, Diagnosis and Testing).<br>Carry out a compression test, GO to Pinpoint Test A. |
| Internal oil leaks (leaks into coolant or combustion chamber) Note: This may be indicated by the production of blue smoke from the exhaust. | • Gaskets<br>• Seals<br>• Hoses<br>• Damaged/Cracked casings<br>• Worn valve guides<br>• Worn cylinder bores/pistons<br>• Broken piston rings | Check for traces of oil in the coolant. Check for evidence of oil in the combustion chambers (deposits on the glow plugs, etc). Confirm oil consumption and vehicle useage with the owner/driver. Carry out an oil consumption test, GO to Pinpoint Test B. |

**Symptom chart, NVH**

• NOTE: As the checks suggested here are open to interpretation, they should be used as a guide only. Descriptions of noises, etc, are in general terms, so depend on a degree of experience on the part of the technician.

| Symptom | Possible cause | Action |
|---|---|---|
| Rattle/ticking from top of engine | • Valve gear noise<br>• Camshaft bearing noise<br>• Camshaft chain noise<br>• Tensioner noise<br>• Vacuum pump noise<br>• High pressure fuel pump noise | Check the engine oil pressure, GO to Pinpoint Test C. Check the function of the hydraulic tappets and the camshaft condition,<br>REFER to: Camshaft Lobe Lift (303-00 Engine System - General Information, General Procedures).<br>Check the camshaft bearings,<br>REFER to: Camshaft Bearing Journal Clearance (303-00 Engine System - General Information, General Procedures). |

GETMEMANUALS.org

| Symptom | Possible cause | Action |
|---|---|---|
| | | Check the camshaft chains and tensioners,<br>REFER to: Cylinder Head LH - VIN Range: N52048->N99999 (303-01B Engine - V8 4.2L Petrol/V8 S/C 4.2L Petrol, In-vehicle Repair).<br>Check the vacuum pump,<br>REFER to: Brake Vacuum Pump - 2.7L V6 - TdV6 (206-07 Power Brake Actuation, Removal and Installation).<br>Check the high pressure fuel pump,<br>REFER to: Fuel Injection Pump (303-04C Fuel Charging and Controls - 2.7L V6 - TdV6, Removal and Installation). |
| Growl from top of engine | • High pressure fuel pump belt noise<br>• High pressure fuel pump belt tensioner noise | Check the high pressure fuel pump belt and tensioner,<br>REFER to: Fuel Injection Pump Belt (303-05 Accessory Drive, Removal and Installation). |
| Squeaking/Creaking/Squeal from front of engine | • Accessory drive belt<br>• Accessory drive belt tensioner<br>• Driven components on accessory drive belt | Check the accessory drive belt and driven components,<br>REFER to: Accessory Drive - 2.7L V6 - TdV6 (303-05 Accessory Drive, Diagnosis and Testing). |
| Whine/Slap/Growl from front of engine | • Accessory drive belt<br>• Accessory drive belt tensioner<br>• Driven components on accessory drive belt<br>• Timing belt noise<br>• Timing belt tensioner noise | Check the accessory drive belt and driven components,<br>REFER to: Accessory Drive - 2.7L V6 - TdV6 (303-05 Accessory Drive, Diagnosis and Testing).<br>Check the timing belt and tensioners,<br>REFER to: Timing Belt (303-01C Engine - 2.7L V6 - TdV6, In-vehicle Repair). |
| Knock from lower half of engine (often worse with a cold engine) | • Piston slap<br>• Piston pin noise<br>• Connecting rod bearing noise | Check the engine oil pressure, GO to Pinpoint Test C. Refer to general procedures for more information,<br>REFER to: Piston Inspection (303-00 Engine System - General Information, General Procedures) /<br>Piston Pin Diameter (303-00 Engine System - General Information, General Procedures) /<br>Connecting Rod Large End Bore (303-00 Engine System - General Information, General Procedures). |
| Knock/Rumble from lower half of engine (often worse on overrun) | • Main bearing noise | Check the engine oil pressure, GO to Pinpoint Test C. Refer to general procedures for more information,<br>REFER to: Crankshaft Main Bearing Journal Clearance - V8 4.2L Petrol/V8 S/C 4.2L Petrol (303-00 Engine System - General Information, General Procedures). |
| Misfire/Rough running | • Engine management<br>• Fuel charging and controls<br>• Exhaust gas recirculation (EGR) system<br>• Burnt/sticking valves<br>• Worn valve guides<br>• Worn cylinder bores/pistons<br>• Broken piston rings<br>• Damaged/Cracked casings | For engine management system tests,<br>REFER to: Electronic Engine Controls (303-14C Electronic Engine Controls - 2.7L V6 - TdV6, Diagnosis and Testing).<br>For fuel charging and controls systems tests,<br>REFER to: Fuel Charging and Controls (303-04C Fuel Charging and Controls - 2.7L V6 - TdV6, Diagnosis and Testing).<br>For EGR system tests,<br>REFER to: Engine Emission Control (303-08B Engine Emission Control - 2.7L V6 - TdV6, Diagnosis and Testing).<br>Carry out a compression test, GO to Pinpoint Test A.<br>REFER to: Cylinder Head Distortion (303-00 Engine System - General Information, General Procedures). |

## Pinpoint tests

• NOTE: Where reference is made to 'suitable equipment', this refers to standard workshop equipment. Refer to the operating instructions for your own equipment when performing any tests.

**PINPOINT TEST A : CHECK THE CYLINDER COMPRESSIONS**

WARNING: Only compression testers able to read the higher compression pressures found in diesel engines should be used. Failure to follow this instruction may result in personal injury.

• NOTE: Where possible, compression testing should be carried out on an engine at operating temperature.

| TEST CONDITIONS | DETAILS/RESULTS/ACTIONS |
|---|---|
| **A1: CARRY OUT A DRY CYLINDER COMPRESSION TEST** | |
| | 1 Make sure the parking brake is applied and that the selector lever is in neutral (or park for vehicles with automatic transmission). |
| | 2 Turn the ignition switch to the **OFF** position. |
| | 3 Remove the starter relay. |
| | 4 Disconnect the starter motor solenoid connector. |
| | 5 Connect a suitable remote starter device to the starter motor solenoid. |
| | 6 Remove the glow plugs,<br>REFER to: Glow Plugs (303-07C Glow Plug System, Removal and Installation). |
| | 7 Install adaptor 303-1131 in place of the glow plug in the first cylinder to be tested. |
| | 8 Connect a suitable compression tester to the adaptor. See warning above. |
| | 9 Using the remote starter device, crank the engine a minimum of five revolutions. |
| | 10 Record the compression figure and the number of revolutions taken to reach it. |
| | 11 Repeat steps 7 - 10 above for the remaining cylinders, cranking the engine for a similar number of revolutions each time. |
| | 12 Compare the compression figures across all the cylinders. |
| | Are the compression figures within 10% of each other?<br>**Yes**<br>Unless the compression figures are universally very low (experience will indicate this), check for other causes for the customer complaint.<br>**No** |

GETtheMANUALS.org

| | |
|---|---|
| | GO to A2. |

**A2: CARRY OUT A WET CYLINDER COMPRESSION TEST**

CAUTION: If engine oil is introduced into the cylinders, run the engine at 2,000 rpm for a minimum of ten minutes after completing testing to prevent damage to the catalytic converters. Failure to follow this instruction may result in damage to the vehicle.

• NOTE: There is a combustion chamber in the top of each piston. Make sure that the oil is not allowed to run into this chamber.

| | |
|---|---|
| | 1 Using a suitable oil can with a flexible spout, introduce a small amount of clean engine oil into the cylinder just before testing, such that the oil is able to run between the piston and the cylinder bore. |
| | 2 Repeat steps 7 - 10 from the test above, introducing oil into each cylinder just before testing. |
| | 3 Compare the compression figures across all the cylinders. |
| | Is the compression figure higher than the dry test?<br>**Yes**<br>A higher figure following the introduction of oil may indicate a worn or damaged cylinder bore, piston and/or piston rings. Disassembly would be required to confirm this.<br>**No**<br>If the compression figure is unaffected by the introduction of oil, but the figure is still less than 90% of the other cylinders, this may indicate a burnt and/or sticking valve, leaking head gasket, etc. Disassembly would be required to confirm this.<br>Clear any DTCs which may have been induced by the test. |

## PINPOINT TEST B : OIL CONSUMPTION TEST

• NOTE: Oil consumption will vary, depending on a number of factors. New engines will normally use more oil than 'run-in' engines, although a guideline would be to expect 16,000 Km (10,000 mls) per liter.

| TEST CONDITIONS | DETAILS/RESULTS/ACTIONS |
|---|---|
| **B1: CHECK FOR EXCESSIVE OIL CONSUMPTION** | |
| | 1 Start the engine and allow it to run until it reaches operating temperature. |
| | 2 Make sure the vehicle is parked on a level surface and switch off. |
| | 3 Allow to settle for at least five minutes. |
| | 4 Check the oil level. |
| | 5 Correct the level, if necessary, and record the reading and mileage in the vehicle history. |
| | 6 Make sure that the owner/driver is aware that a test is being carried out, and that they should not top-up their oil level for the duration of the test, but should check the level every 160-240 Km (100-150 miles). |
| | 7 When the oil level reaches the **ADD** mark, the customer should bring the vehicle in to be checked. |
| | 8 Top-up the oil to the level at the beginning of the test and record the amount of oil needed to do so, and the mileage covered in the course of the test. |
| | 9 From this, the consumption can be calculated, and a decision made as to whether or not the consumption is considered excessive. |
| | Is the consumption excessive for the mileage and/or use?<br>**Yes**<br>Disassembly will be required to check the components indicated in the symptom chart.<br>**No**<br>No further action is necessary. |

## PINPOINT TEST C : CHECK THE ENGINE OIL PRESSURE

• NOTE: Check and, if necessary, top-up the engine oil level before beginning this test.

• NOTE: Where reference is made to 'suitable equipment', this refers to standard workshop equipment. Refer to the operating instructions for your own equipment when performing any tests.

| TEST CONDITIONS | DETAILS/RESULTS/ACTIONS |
|---|---|
| **C1: CHECK FOR LOW ENGINE OIL PRESSURE** | |
| | 1 Remove the oil pressure sensor,<br>REFER to: Engine Oil Pressure (EOP) Sensor (303-14C Electronic Engine Controls - 2.7L V6 - TdV6, Removal and Installation). |
| | 2 Connect a suitable oil pressure gauge in place of the oil pressure sensor. |
| | 3 Start the engine and check for leaks at the gauge connection. |
| | 4 Allow the engine to idle and monitor the oil pressure. |
| | 5 Raise the engine speed to 2,500 rpm and monitor the oil pressure. |
| | Is the oil pressure less than 0.50 bar (7.25 psi) between idle and 2,500 rpm?<br>**Yes**<br>GO to C2.<br>**No**<br>GO to C3. |
| **C2: CHECK FOR LOW ENGINE OIL PRESSURE AT ENGINE SPEEDS GREATER THAN 2,500 RPM** | |
| | 1 Raise the engine speed to above 2,500 rpm and monitor the oil pressure. |
| | Is the oil pressure less than 1.0 bar (14.5 psi) at engine speeds greater than 2,500 rpm?<br>**Yes**<br>Pressure this low may indicate a problem with: oil pump, filtering, clearances within the engine. Check if there are any other indications of engine faults (noise, etc), refer to the symptom chart above.<br>**No**<br>GO to C3. |
| **C3: CHECK FOR HIGH ENGINE OIL PRESSURE** | |
| | 1 Monitor the engine oil pressure at varying engine speeds. |
| | Does the oil pressure reach 4.0 bar (58 psi)?<br>**Yes**<br>Pressure this high may indicate a blockage in the lubrication system. If this is not resolved, high oil pressure will lead to engine oil leaks and other failures.<br>**No**<br>If the oil pressure stays in the band between 0.50 bar (7.25 psi) and 1.0 bar (14.5 psi) this would be considered normal. |

GETtheMANUALS.org

# Engine System - General Information - Bearing Inspection

General Procedures

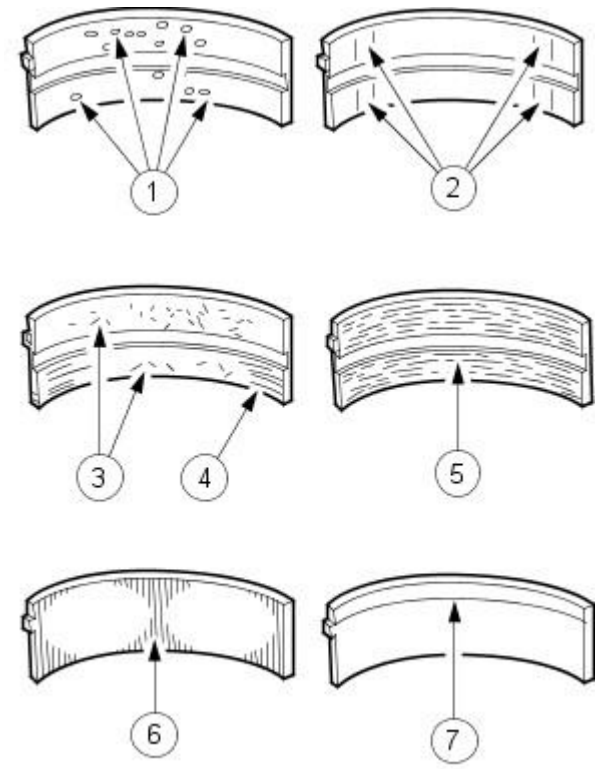


VUJ0002219

**1.** Inspect bearings for the following defects.

1. Cratering - fatigue failure
2. Spot polishing - incorrect seating.
3. Imbedded dirt engine oil.
4. Scratching - dirty engine oil.
5. Base exposed - poor lubrication.
6. Both edges worn - journal damaged.
7. One edge worn - journal tapered or bearing not seated.

GETtheMANUALS.org

# Engine System - General Information - Camshaft Bearing Journal Clearance

General Procedures

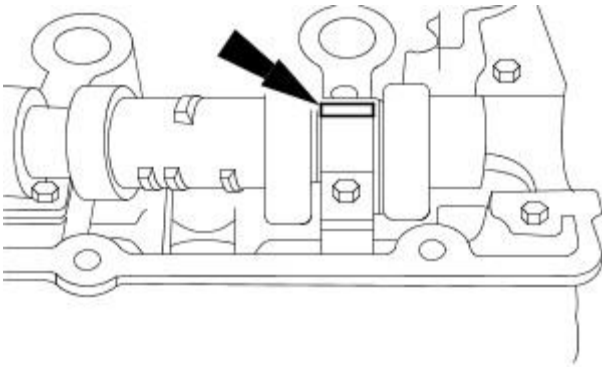

VUJ0001696

**1.** NOTE: Make sure that the following stages are followed exactly. The tappets or followers must be removed to carry out this measurement.

• NOTE: Make sure that the camshaft is to specification.

• NOTE: The bearing caps and journals should be free from engine oil and dirt.

Position on a length of plastigage on the bearing cap.

- Insert the camshaft, without lubrication, into the cylinder head.
- Position a plastigage strip, which should be equal to the width of the bearing cap, on the bearing journal.

**2.** Install the camshaft bearing caps.

- Follow the relevant tightening sequence.

**3.** NOTE: Do not strike the bearing caps.

Remove the camshaft bearing caps.

- Follow the relevant loosening sequence.

**4.** Using the special tool, read off the measurement.

- Compare the width of plastigage with the plastigage scale.
- The value that is read off is the bearing clearance.
- If the values are not to specification install a new camshaft.

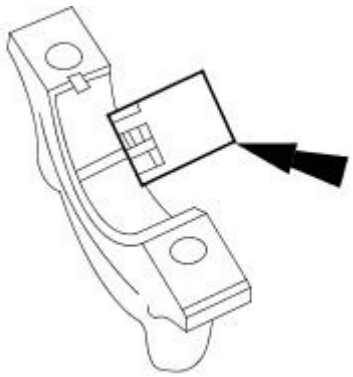

VUJ0001697

GETtheMANUALS.org

# Engine System - General Information - Camshaft Bearing Journal Diameter

General Procedures

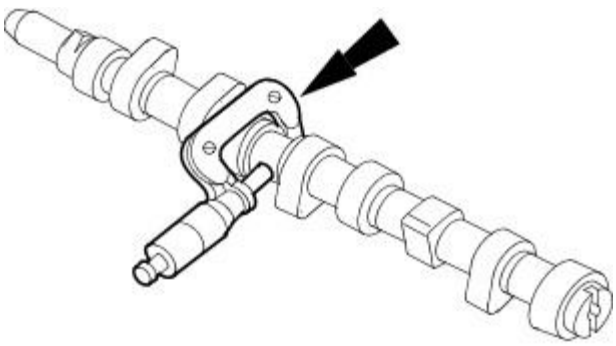

VUJ0001695

**1.** Determine the diameter of the camshaft journals.

- Using a micrometer measure the diameter at 90 degrees intervals to determine if the journals are out-of-round.
- Measure at two different points on the journal to determine if there is any tapering.
- If the measurements are out of the specified range, install a new camshaft.

GETtheMANUALS.org

# Engine System - General Information - Camshaft End Play

General Procedures

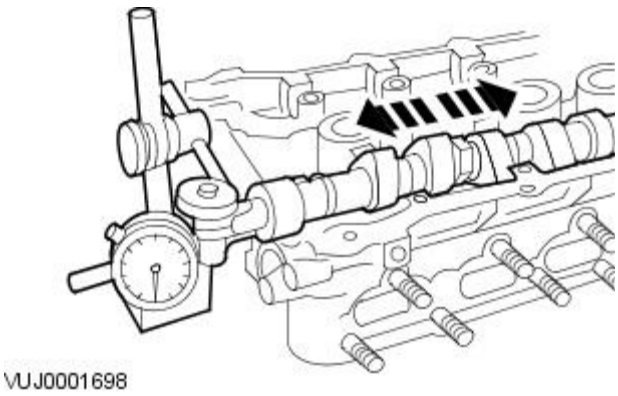


**1.** NOTE: Make sure that the camshaft is to specification.

Using the special tool, measure the end play.

- Slide the camshaft in both directions. Read and note the maximum and minimum values on the dial indicator gauge.
  1. End play = maximum value minus minimum value.
- If the measurement is out of specification, install new components.

GETtheMANUALS.org

# Engine System - General Information - Camshaft Lobe Lift

General Procedures

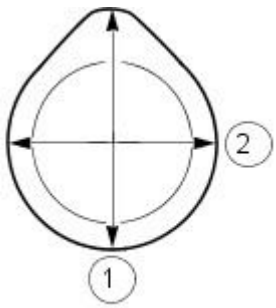


VUJ0001699

1. Measure the diameter (1) and diameter (2) with a vernier caliper. The difference in measurements is the lobe lift.

GETtheMANUALS.org

# Engine System - General Information - Camshaft Surface Inspection

General Procedures

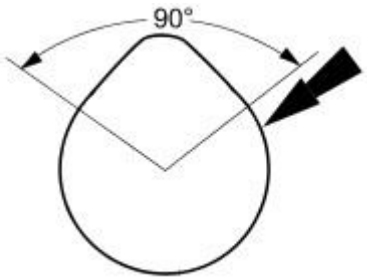


VUJ0001700

1. Inspect camshaft lobes for pitting or damage in the active area. Minor pitting is acceptable outside the active area.

GETtheMANUALS.org

# Engine System - General Information - Connecting Rod Cleaning

General Procedures

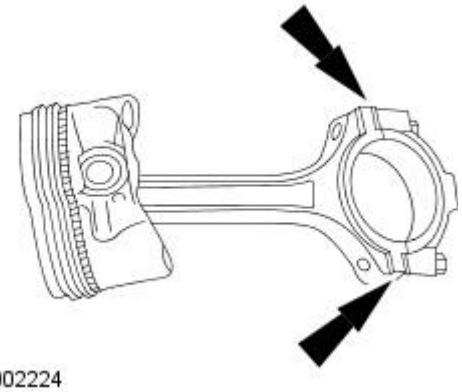

VUJ0002224

1. CAUTION: Do not use a caustic cleaning solution or damage to connecting rods may occur.

   Mark and separate the parts and clean with solvent. Clean the oil passages.

GETtheMANUALS.org

# Engine System - General Information - Connecting Rod Large End Bore

General Procedures

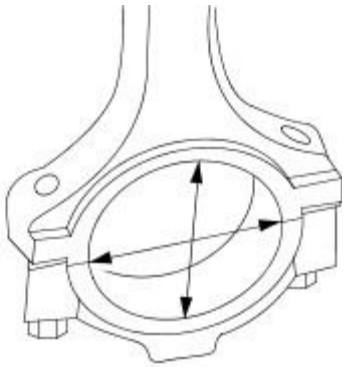

VUJ0002223

1. Measure the bearing bore in two directions. The difference is the connecting rod bore out-of-round. Verify the out-of-round is within specification.

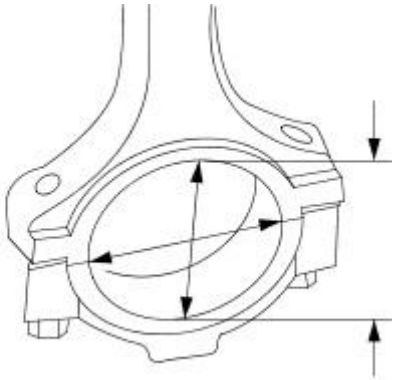

VUJ0002222

2. Measure the bearing bore diameter in two directions. Verify the bearing bore is within specification.

GETtheMANUALS.org

# Engine System - General Information - Crankshaft End Play

General Procedures

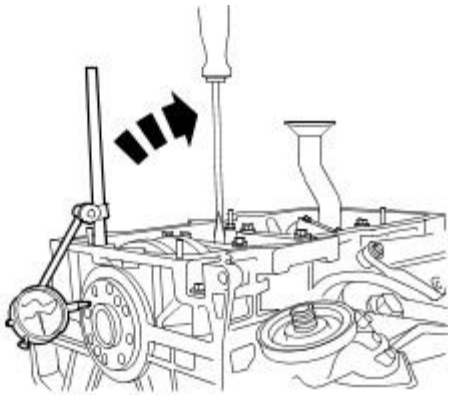

VUJ0002235

**1.** Using the Dial Indicator Gauge with Brackets, measure the end play.

- Measure the end play by lifting the crankshaft using a lever.
- If the value is out of the specification, install new thrust half rings to take up the end float and repeat the measurement.

GETtheMANUALS.org

# Engine System - General Information - Crankshaft Main Bearing Journal Clearance2.5L NA V6 - AJV6 / 3.0L NA V6 - AJ27

General Procedures

**1.** The main bearing machine codes are displayed on the crankshaft (1) and the cylinder block (2)

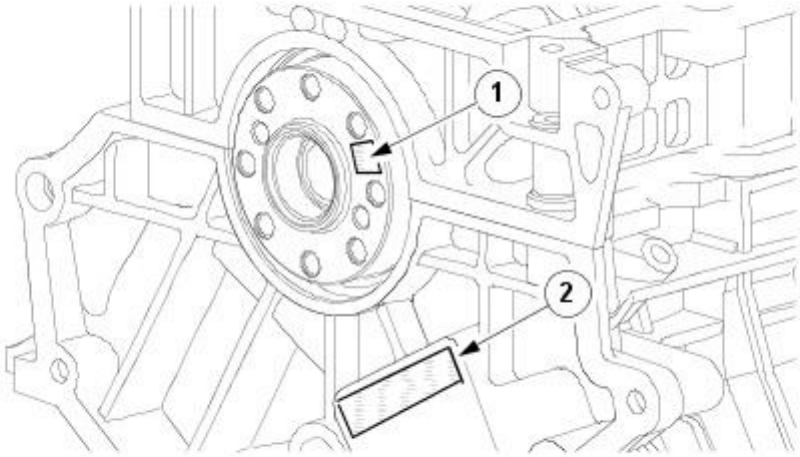


E53234

**2.** NOTE: Main bearing number 1 relates to the front of the engine.

Read the identification numbers from the crankshaft (1).

- The first two numbers represent the code for main bearing number 1.
- The second pair of numbers represents the code for main bearing number 2.
- The third pair of numbers represents the code for main bearing number 3.
- The last pair of numbers represents the code for main bearing number 4.

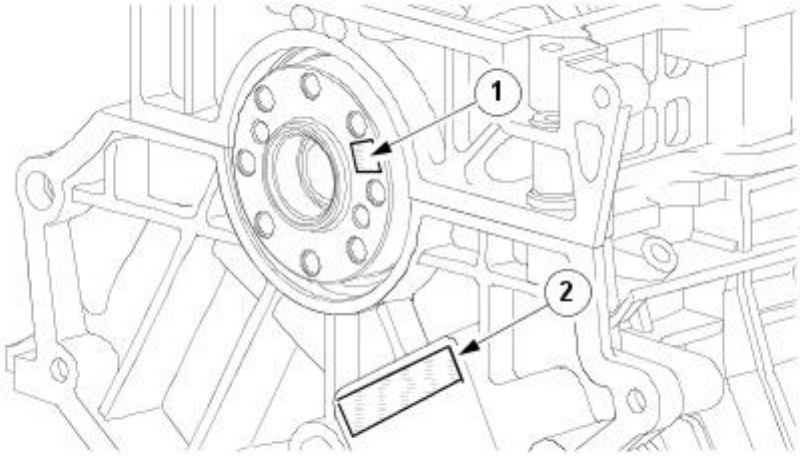


E53234

GETtheMANUALS.org

**3.** NOTE: Main bearing number 1 relates to the front of the engine.

Read the identification numbers on the cylinder block (2).

- The first two numbers represent the code for main bearing number 1.
- The second pair of numbers represents the code for main bearing number 2.
- The third pair of numbers represents the code for main bearing number 3.
- The last pair of numbers represents the code for main bearing number 4.

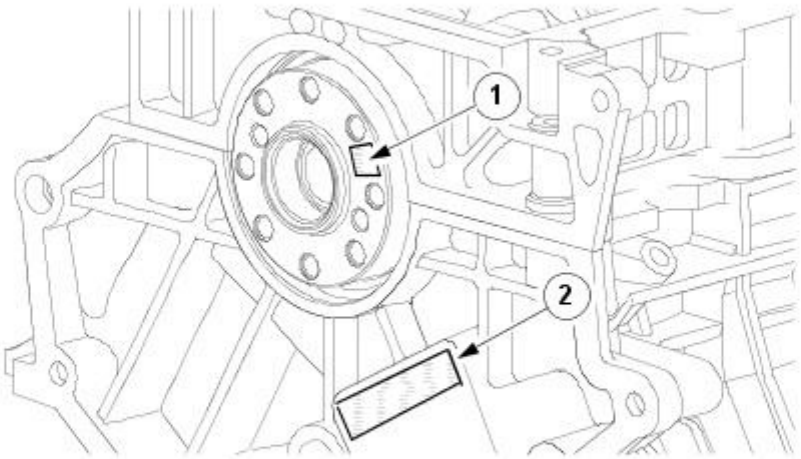


E53234

**4.** Using the select fit chart, for each main bearing match the crankshaft code (1) and the block code (2) with it's corresponding column or row. By reading across the crankshaft code row (1) and down the block code column (2) select the correct grade bearing for each main.

- **1 Crankshaft code.**
- **2 Block code.**

**2**

| 1 | 98 | 99 | 00 | 01 | 02 | 03 | 04 | 05 | 06 | 07 | 08 | 09 | 10 | 11 | 12 | 13 | 14 | 15 | 16 | 17 | 18 | 19 | 20 | 21 | 22 |
|---|---|---|---|---|---|---|---|---|---|---|---|---|---|---|---|---|---|---|---|---|---|---|---|---|---|
| 92 | 1 | 1 | 1 | 1 | 1 | 1 | 1 | 1 | 1 | 1 | 1 | 1 | 1 | 1 | 1 | 1 | 2 | 2 | 2 | 2 | 2 | 2 | 2 | 2 | 2 |
| 91 | 1 | 1 | 1 | 1 | 1 | 1 | 1 | 1 | 1 | 1 | 1 | 1 | 1 | 1 | 1 | 2 | 2 | 2 | 2 | 2 | 2 | 2 | 2 | 2 | 2 |
| 90 | 1 | 1 | 1 | 1 | 1 | 1 | 1 | 1 | 1 | 1 | 1 | 1 | 1 | 1 | 2 | 2 | 2 | 2 | 2 | 2 | 2 | 2 | 2 | 2 | 2 |
| 89 | 1 | 1 | 1 | 1 | 1 | 1 | 1 | 1 | 1 | 1 | 1 | 1 | 1 | 2 | 2 | 2 | 2 | 2 | 2 | 2 | 2 | 2 | 2 | 2 | 2 |
| 88 | 1 | 1 | 1 | 1 | 1 | 1 | 1 | 1 | 1 | 1 | 1 | 1 | 2 | 2 | 2 | 2 | 2 | 2 | 2 | 2 | 2 | 2 | 2 | 2 | 2 |
| 87 | 1 | 1 | 1 | 1 | 1 | 1 | 1 | 1 | 1 | 1 | 1 | 2 | 2 | 2 | 2 | 2 | 2 | 2 | 2 | 2 | 2 | 2 | 2 | 2 | 2 |
| 86 | 1 | 1 | 1 | 1 | 1 | 1 | 1 | 1 | 1 | 1 | 2 | 2 | 2 | 2 | 2 | 2 | 2 | 2 | 2 | 2 | 2 | 2 | 2 | 2 | 2 |
| 85 | 1 | 1 | 1 | 1 | 1 | 1 | 1 | 1 | 1 | 2 | 2 | 2 | 2 | 2 | 2 | 2 | 2 | 2 | 2 | 2 | 2 | 2 | 2 | 2 | 2 |
| 84 | 1 | 1 | 1 | 1 | 1 | 1 | 1 | 1 | 2 | 2 | 2 | 2 | 2 | 2 | 2 | 2 | 2 | 2 | 2 | 2 | 2 | 2 | 2 | 2 | 3 |
| 83 | 1 | 1 | 1 | 1 | 1 | 1 | 1 | 2 | 2 | 2 | 2 | 2 | 2 | 2 | 2 | 2 | 2 | 2 | 2 | 2 | 2 | 2 | 2 | 3 | 3 |
| 82 | 1 | 1 | 1 | 1 | 1 | 1 | 2 | 2 | 2 | 2 | 2 | 2 | 2 | 2 | 2 | 2 | 2 | 2 | 2 | 2 | 2 | 2 | 3 | 3 | 3 |
| 81 | 1 | 1 | 1 | 1 | 1 | 2 | 2 | 2 | 2 | 2 | 2 | 2 | 2 | 2 | 2 | 2 | 2 | 2 | 2 | 2 | 2 | 3 | 3 | 3 | 3 |
| 80 | 1 | 1 | 1 | 1 | 2 | 2 | 2 | 2 | 2 | 2 | 2 | 2 | 2 | 2 | 2 | 2 | 2 | 2 | 2 | 2 | 3 | 3 | 3 | 3 | 3 |
| 79 | 1 | 1 | 1 | 2 | 2 | 2 | 2 | 2 | 2 | 2 | 2 | 2 | 2 | 2 | 2 | 2 | 2 | 2 | 2 | 3 | 3 | 3 | 3 | 3 | 3 |
| 78 | 1 | 1 | 2 | 2 | 2 | 2 | 2 | 2 | 2 | 2 | 2 | 2 | 2 | 2 | 2 | 2 | 2 | 2 | 3 | 3 | 3 | 3 | 3 | 3 | 3 |
| 77 | 1 | 2 | 2 | 2 | 2 | 2 | 2 | 2 | 2 | 2 | 2 | 2 | 2 | 2 | 2 | 2 | 2 | 3 | 3 | 3 | 3 | 3 | 3 | 3 | 3 |
| 76 | 2 | 2 | 2 | 2 | 2 | 2 | 2 | 2 | 2 | 2 | 2 | 2 | 2 | 2 | 2 | 2 | 3 | 3 | 3 | 3 | 3 | 3 | 3 | 3 | 3 |
| 75 | 2 | 2 | 2 | 2 | 2 | 2 | 2 | 2 | 2 | 2 | 2 | 2 | 2 | 2 | 2 | 3 | 3 | 3 | 3 | 3 | 3 | 3 | 3 | 3 | 3 |
| 74 | 2 | 2 | 2 | 2 | 2 | 2 | 2 | 2 | 2 | 2 | 2 | 2 | 2 | 2 | 3 | 3 | 3 | 3 | 3 | 3 | 3 | 3 | 3 | 3 | 3 |
| 73 | 2 | 2 | 2 | 2 | 2 | 2 | 2 | 2 | 2 | 2 | 2 | 2 | 2 | 3 | 3 | 3 | 3 | 3 | 3 | 3 | 3 | 3 | 3 | 3 | 3 |
| 72 | 2 | 2 | 2 | 2 | 2 | 2 | 2 | 2 | 2 | 2 | 2 | 2 | 3 | 3 | 3 | 3 | 3 | 3 | 3 | 3 | 3 | 3 | 3 | 3 | 3 |
| 71 | 2 | 2 | 2 | 2 | 2 | 2 | 2 | 2 | 2 | 2 | 2 | 3 | 3 | 3 | 3 | 3 | 3 | 3 | 3 | 3 | 3 | 3 | 3 | 3 | 3 |
| 70 | 2 | 2 | 2 | 2 | 2 | 2 | 2 | 2 | 2 | 2 | 3 | 3 | 3 | 3 | 3 | 3 | 3 | 3 | 3 | 3 | 3 | 3 | 3 | 3 | 3 |
| 69 | 2 | 2 | 2 | 2 | 2 | 2 | 2 | 2 | 2 | 3 | 3 | 3 | 3 | 3 | 3 | 3 | 3 | 3 | 3 | 3 | 3 | 3 | 3 | 3 | 3 |
| 68 | 2 | 2 | 2 | 2 | 2 | 2 | 2 | 2 | 3 | 3 | 3 | 3 | 3 | 3 | 3 | 3 | 3 | 3 | 3 | 3 | 3 | 3 | 3 | 3 | 3 |

E53233

**5.** E.g. if the crankshaft code is *8580*8082* and the Block code is *0609*0711*, main bearing 1 should be assembled with a grade 1 bearing, as determined by the intersection of the number 06 block column (2) and the number 85 crankshaft row (1).

- Main bearing 2, 3 and 4 would all be assemble with a grade 2.

GETtheMANUALS.org

# Engine System - General Information - Crankshaft Main Bearing Journal ClearanceV8 4.2L Petrol/V8 S/C 4.2L Petrol

General Procedures

CAUTION: **THESES PROCEDURES SHOULD NOT BE CARRIED OUT DURING THE MANUFACTURERS WARRANTY PERIOD.**

**1.** NOTE: **Example - *PJEAL* - Crankshaft Main Journal Diameter.**

Read the grade letters from LEFT to RIGHT = FRONT to REAR of engine eg. for this example engine, the crank journal at the front of the engine is grade P, and at the rear is grade L.

- The selection of main bearing shells is described in the following chart.

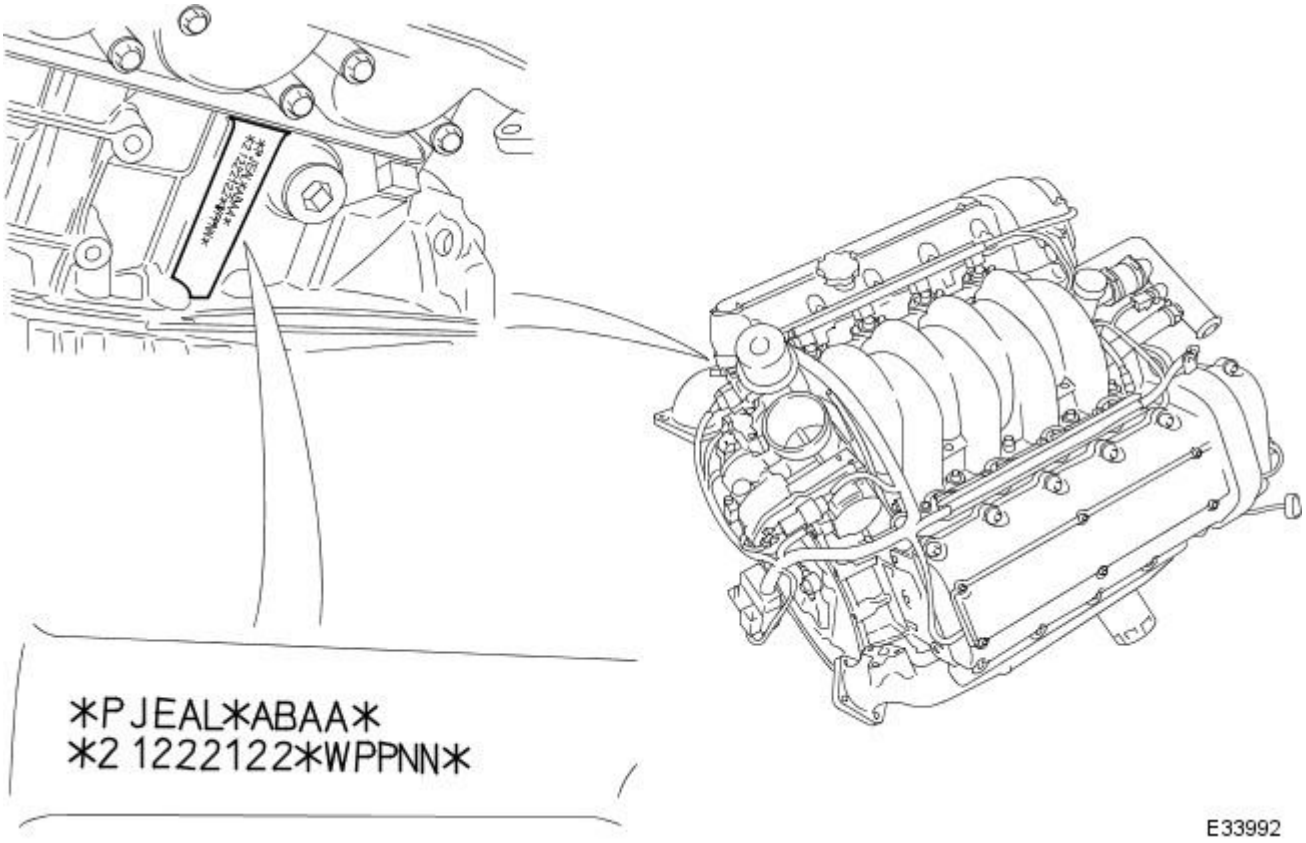


**2.** NOTE: **Example - *ABAA* - Crankshaft (Big End Bearing) Crankpin Diameter**

• NOTE: **For vehicles built up to 2002 MY.**

• NOTE: **If the crankshaft main bearing carrier retaining bolts have been marked with a center punch dot, they must be discarded and new bolts installed.**

Read the grade letters from LEFT to RIGHT = FRONT to REAR of engine eg. for this example engine, the crankpin at the front of the engine is grade A and at the rear is also grade A.

- Grade A = 56,000 to 55,994 mm (Bearing Shell Color Code - Blue).
- Grade B = 55,994 to 55,988 mm (Bearing Shell Color Code - Green).
- Grade C = 55,988 to 55,982 mm (Bearing Shell Color Code - Yellow).

**3.** NOTE: **Example - *ABAA* - Crankshaft (Big End Bearing) Crankpin Diameter**

• NOTE: **For vehicles built from 2002 MY.**

• NOTE: **If the crankshaft main bearing carrier retaining bolts have been marked with a center punch dot, they must be discarded and new bolts installed.**

Read the grade letters from LEFT to RIGHT = FRONT to REAR of engine eg. for this example engine, the crankpin at the front of the engine is grade A and at the rear is also grade A.

- Grade A = 53,000 to 52,994 mm (Bearing Shell Color Code - Blue).
- Grade B = 52,994 to 52,988 mm (Bearing Shell Color Code -

GETtheMANUALS.org

Green).

- Grade C = 52,988 to 52,982 mm (Bearing Shell Color Code - Yellow).

**4.** NOTE: **Example - *21222122* - Cylinder Bore and Piston**

The cylinder bore grades read from LEFT to RIGHT as follows:

- Bank 2 - Cylinder 1, Bank 2 - Cylinder 2, Bank 2 - Cylinder 3, Bank 2 - Cylinder 4, Bank 1 - Cylinder 4,
- Bank 1 - Cylinder 3, Bank 1 - Cylinder 2, Bank 1 - Cylinder 1.
- **(Note, in earlier publications Bank 1 was described as A-Bank and Bank 2 as B-Bank)**
- Grade 1 Bore = 85,990 to 86,000 mm.
- Grade 2 Bore = 86,000 to 86,010 mm.
- Grade 3 Bore = 86,010 to 86,020 mm.

**5.** NOTE: **Example - *WPPNN* - Crankshaft Main Bearing Bore in Cylinder Block**

Read the grade letters from LEFT to RIGHT = FRONT to REAR of engine eg. for this example engine, the crank journal bore at the front of the engine is grade W, and at the rear is grade N.

- The selection of main bearing shells is described in the following **JOURNAL DIAMETER AND MAIN BEARING BORE CHART**.

**6. JOURNAL DIAMETER AND MAIN BEARING BORE CHART**

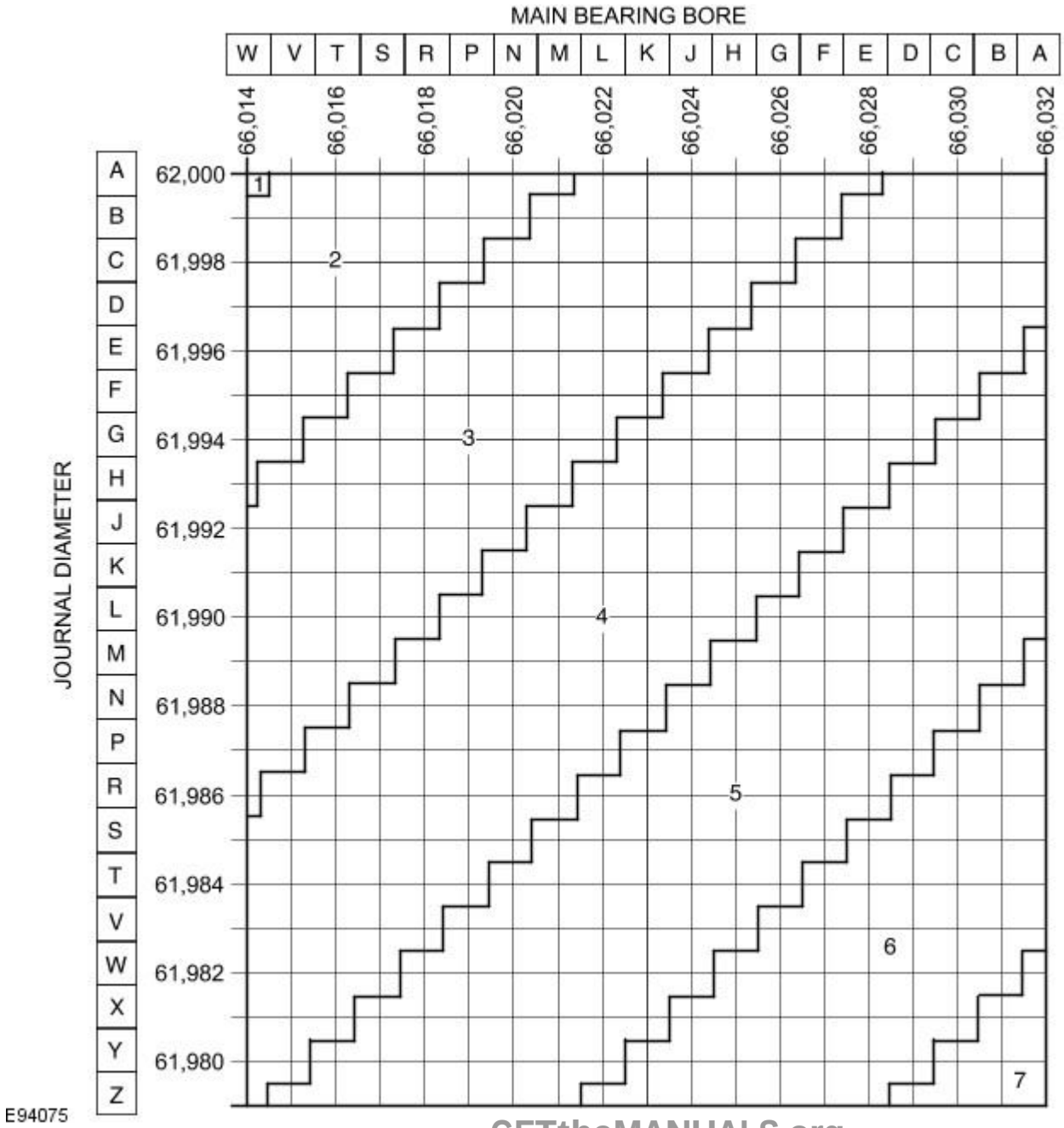


GETtheMANUALS.org

**7.** NOTE: **THIS PROCEDURE SHOULD ONLY BE CARRIED OUT WHEN**

**REPLACIING MAIN BEARING SHELLS.**

• NOTE: Refer to the **JOURNAL DIAMETER AND MAIN BEARING BORE CHART** in step 6 for tolerance and bearing information.

The number in each diagonal band represents a PAIR of color coded main bearing shells which must be used with a specific journal, depending on the combination of journal diameter and crankshaft bore diameter. The color codes for each band are as follows:

1. **Blue / Green and Blue / Green**
2. **Blue / Green and Blue**
3. **Blue and Blue**
4. **Blue and Green**
5. **Green and Green**
6. **Green and Yellow**
7. **Yellow and Yellow**

- Consider crankshaft journal 5 (from the example grade markings on the cylinder block) - the cylinder block bore is Grade N and the crankshaft journal diameter is Grade L. From the chart, it will be seen that the point of intersection is in Band 4 which equates to one Blue shell and one Green shell.
- When the appropriate pair of color codes have been selected for a journal, either color may be installed to the cylinder block or to the bedplate, but, the shell which is to be installed to the cylinder block must have an oil groove and the shell which is to be installed to the bedplate must be plain.

**8.** NOTE: **THIS PROCEDURE SHOULD ONLY BE CARRIED OUT WHEN A REPLACMENT CRANKSHAFT OR CYLINDER BLOCK HAS BEEN FITTED.**

• NOTE: Refer to the **JOURNAL DIAMETER AND MAIN BEARING BORE CHART** in step 6 for tolerance and bearing information.

The thickness grade of all main bearing shells are to be selected to give a total running clearance of not less than 0.022 mm or greater than 0.040 mm.

- Each bearing bore in the block/bedplate assembly should be measured at two mutually perpendicular diameters 45° to the vertical in the middle of the bearing.
- The minimum diameter of the two is to be used.
- Each crankshaft main bearing journal should be measured dynamically at a point in line with the middle of each bearing.
- When the appropriate pair of color codes have been selected for a journal, either color may be installed to the cylinder block or to the bedplate, but, the shell which is to be installed to the cylinder block must have an oil groove and the shell which is to be installed to the bedplate must be plain.

**www.JagDocs.com**

GETtheMANUALS.org

# Engine System - General Information - Cylinder Bore Out-of-Round

General Procedures

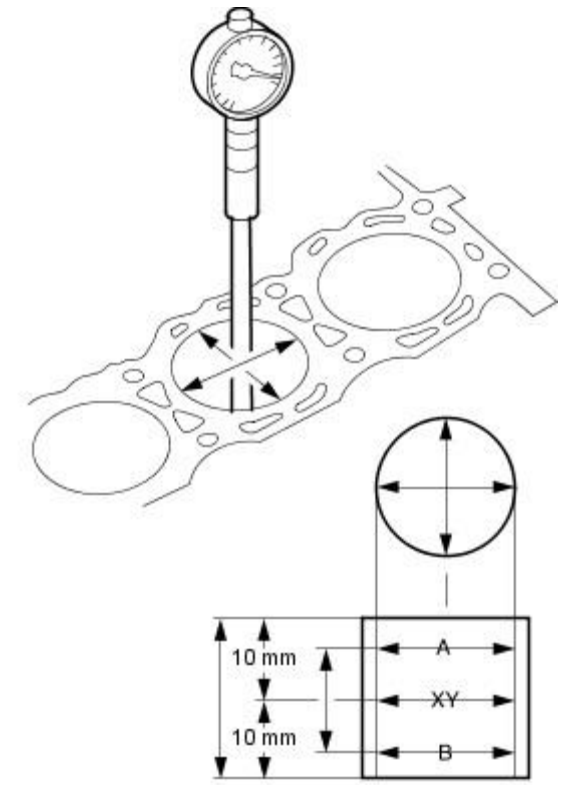


VUJ0002234

**1.** NOTE: The main bearing caps or lower crankcase must be in place and tightened to the specified torque; however, the bearing shells should not be installed.

Measure the cylinder bore with an internal micrometer.

- Carry out the measurements in different directions and at different heights to determine if there is any out-of-roundness or tapering.
- If the measurement is out of the specified range, hone out the cylinder block or install a new block.

GETtheMANUALS.org

# Engine System - General Information - Cylinder Head Distortion

General Procedures

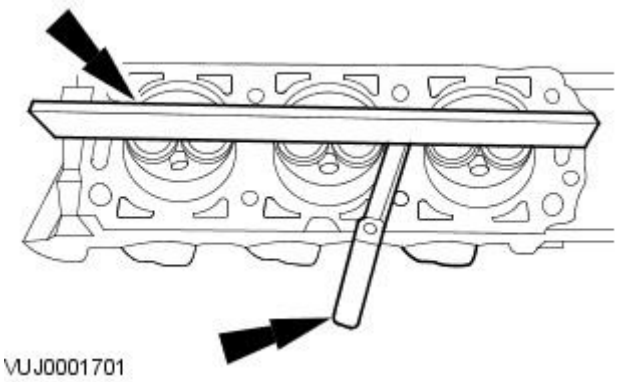


**1.** Measure the cylinder block/cylinder head distortion.

- Using the special tool, measure the mating face distortion.
- If the value is not to specification rework the mating face.

GETtheMANUALS.org

# Engine System - General Information - Exhaust Manifold Cleaning and Inspection

General Procedures

1. Inspect the cylinder head joining flanges of the exhaust manifold for evidence of exhaust gas leaks.
2. Inspect the exhaust manifold for cracks, damaged gasket surfaces, or other damage that would make it unfit for further use.

GETtheMANUALS.org

# Engine System - General Information - Piston Inspection

General Procedures

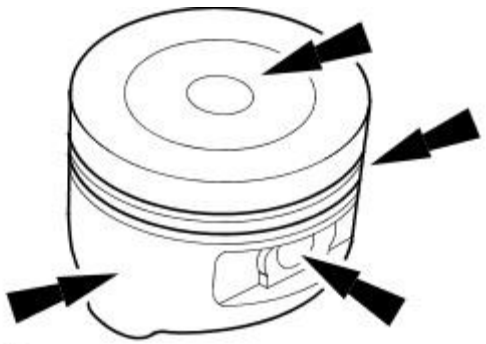

VUJ0002233

**1.** CAUTION: Do not use any aggressive cleaning fluid or a wire brush to clean the piston.

Carry out a visual inspection.

- Clean the piston skirt, pin bush, ring grooves and crown and check for wear or cracks.
- If there are signs of wear on the piston skirt, check whether the connecting rod is twisted or bent.

GETtheMANUALS.org

# Engine System - General Information - Piston Pin Diameter

General Procedures

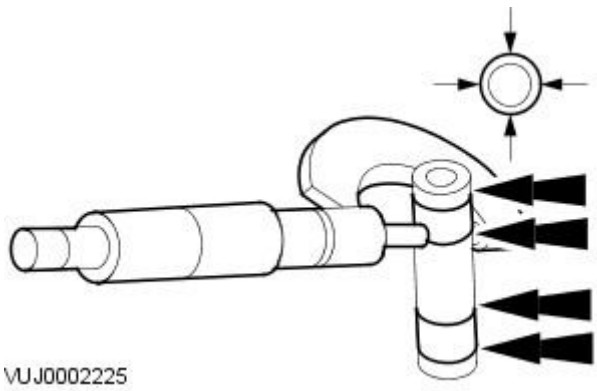


**1.** NOTE: The piston and piston pin are a matched pair. Do not mix up the components.

Measure the piston pin diameter.

- Measure the diameter in two directions.
- If the values are not to specification, install a new piston and a new piston pin.

GETtheMANUALS.org

# Engine System - General Information - Piston Pin to Bore Diameter

General Procedures

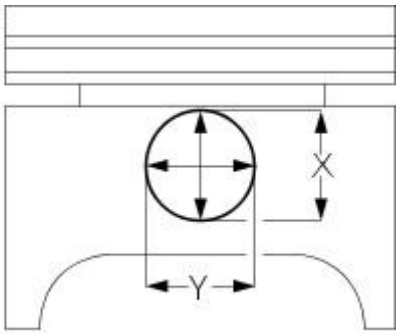


VUJ0002232

**1.** NOTE: The piston and piston pin form a matched pair. Do not mix up the components.

Measure the diameter of the piston pin bore.

- Measure the diameter in two directions.
- If the values are not to specification, install both a new piston and a new piston pin.

GETtheMANUALS.org

# Engine System - General Information - Piston Ring End Gap

General Procedures

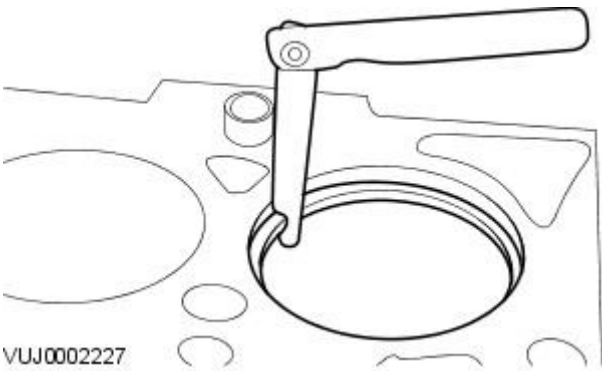


**1.** CAUTION: Do not mix up the piston rings. Install the piston rings in the same position and location.

Using the Feeler Gauge, measure the piston ring gap.

- The values given in the specification refer to a gauge ring used during production.

GETtheMANUALS.org

# Engine System - General Information - Piston Ring-to-Groove Clearance

General Procedures

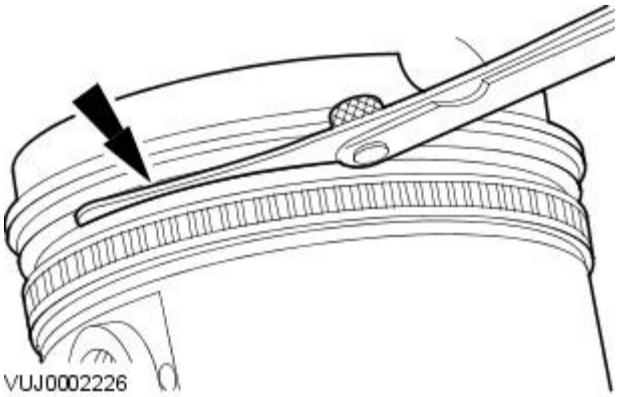


**1.** NOTE: The piston ring must protrude from the piston groove. To determine the piston ring clearance, insert the Feeler Gauge right to the back of the groove, behind the wear ridge.

Using the Feeler Gauge, measure the piston ring clearance.

GETtheMANUALS.org

# Engine System - General Information - Valve Spring Free Length

General Procedures

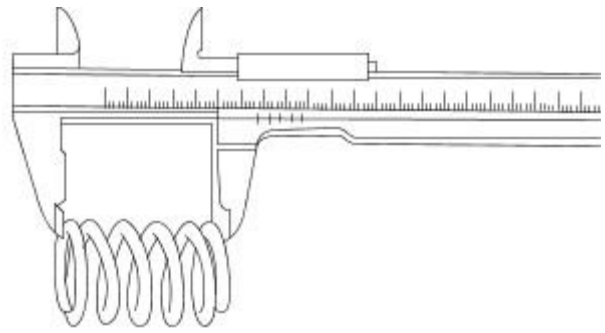

VUJ0002221

1. Using a vernier gauge, measure the free length of each valve spring. Verify the length is within specification.

GETtheMANUALS.org

# Engine System - General Information - Valve Stem Diameter

General Procedures

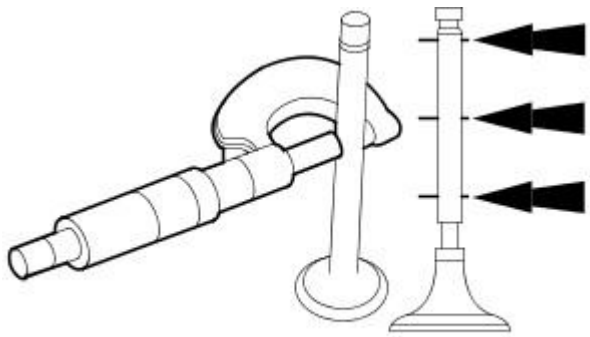

VUJ0002220

**1.** Using a micrometer measure the diameter of the valve stems.

- If the measurements are not to specification, install a new valve.

GETtheMANUALS.org

# Engine System - General Information - Leakage Test Using Smoke Test Equipment

General Procedures

CAUTION: The compressed air line supply pressure must be between 3.5 and 12 bar (50 and 175 psi) for the smoke test equipment to function correctly. Do not exceed this pressure. Failure to follow this instruction may result in damage to the smoke test equipment.

• NOTE: The vehicle battery must be in good condition and fully charged before carrying out this procedure.

• NOTE: On vehicles with 3.0L TDV6, it will be necessary to insert smoke at both air cleaner outlet pipes independently if the right hand turbocharger and associated hoses are to be tested.

• NOTE: In some cases it may be necessary to remove undertrays, trim or engine covers to obtain access to all potential leak locations.

• NOTE: Some variation in the illustrations may occur, but the essential information is always correct.

• NOTE: For further information regarding operation of the test equipment refer to the manufacturers operators manual supplied with the kit.

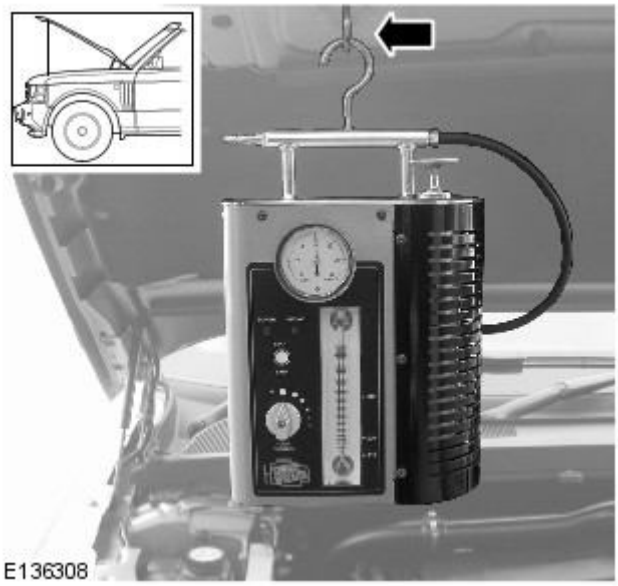


**1.** WARNING: Use an additional support to prevent the hood from falling if the smoke test equipment is secured to the hood. Failure to follow this instruction may result in personal injury.

Install the smoke test equipment to a suitable location under the hood.

**2.** Connect a suitable compressed air line to the smoke test equipment.

**3.** Connect the smoke test equipment positive power cable to the battery positive terminal.

**4.** WARNING: Do not connect the smoke test equipment negative cable to the battery negative terminal.

Connect the smoke test equipment negative cable to a suitable body ground point.

**5.** NOTE: A flashing green light indicates low battery voltage. In this case, place the battery on charge and make sure that the battery is fully charged before using the smoke test equipment.

Observe the power indicator lamp on the smoke test equipment. Make sure that a continuous green light is displayed.

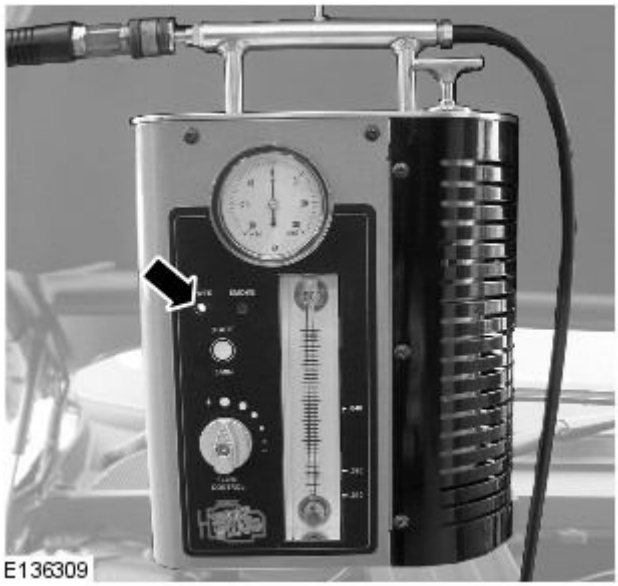


GETtheMANUALS.org

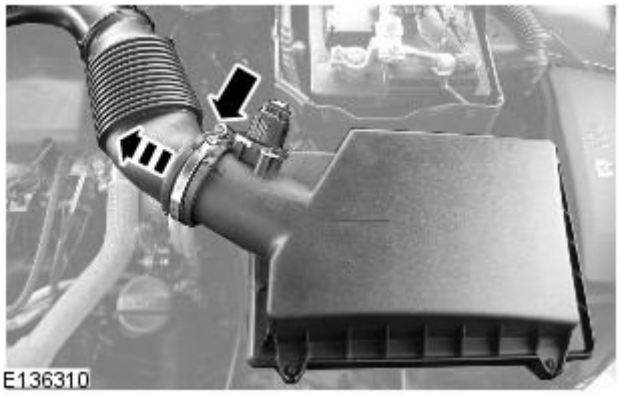


**6.** NOTE: In some cases it may be necessary to remove the air cleaner(s) to allow access to the air cleaner outlet pipes.

• NOTE: In some cases it will be necessary to cap one of the air cleaner outlet pipes. Use the blanking caps supplied in the kit to cap the open orifice.

Disconnect the air cleaner outlet pipe(s).

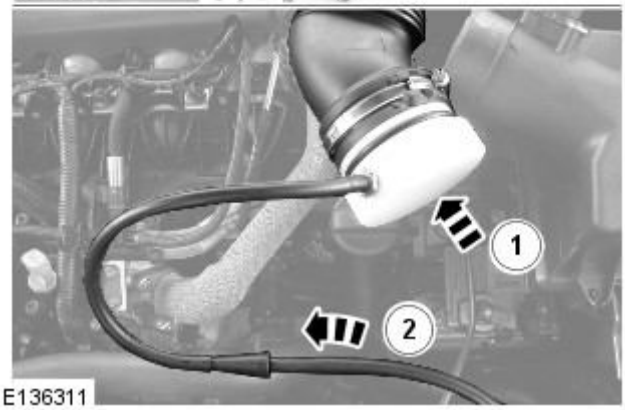


**7.** NOTE: Make sure the smoke test equipment adapter is a good fit to the air cleaner outlet pipe. This must be an air tight seal.

Connect the smoke test equipment supply hose to the air cleaner outlet pipe.

1. Install the appropriate adapter to the air cleaner outlet pipe.
2. Connect the smoke test equipment supply hose to the adapter link hose.

**8.** NOTE: The flow control valve must be in the fully open position.

• NOTE: Smoke is produced for 5 minutes. The smoke test equipment will automatically switch off after this period of time.

Switch the smoke test equipment on.

**9.** Remove the oil filler cap, and observe until a constant flow of smoke is visible leaving the oil filler orifice. Install the oil filler cap.

**10.** NOTE: The longer smoke is allowed to exit from a leak, the more fluorescent dye will be deposited at a leak location.

Using the torch supplied in the kit set to white light, look for escaping smoke. Alternatively, use the ultraviolet light to look for fluorescent dye deposits at the source of a leak.

GETtheMANUALS.org

# Engine - 2.5L NA V6 - AJV6 / 3.0L NA V6 - AJ27 -

**Lubricants, Fluids, Sealers and Adhesives**

| Description | Specification |
|---|---|
| Engine oil, SAE 5W-30 (NAS) | API SL and ILSAC GF–3 |
| Engine oil, SAE 5W-30 (ROW) | API SJ / EC and ACEA A1 or A3 Jaguar WSS–M2C913–B preferred |
| Engine assembly lubricant | SQM-2C9003 AA EP90 |
| Sealant | WSS M4G 320-A3 |
| Hose assembly surfactant | ESE-M99 B144-B |

**Capacities**

| Description | Liters |
|---|---|
| Engine oil, initial fill | 7.0 |
| Engine oil, service fill with oil filter change | 6.5 |

**Torque Specifications**

| Description | Nm | lb-ft | lb-in |
|---|---|---|---|
| Accessory drive belt idler pulley retaining bolt | 25 | 18 | - |
| Accessory drive belt tensioner retaining bolt | 48 | 35 | |
| A/C compressor retaining bolts | 25 | 18 | - |
| A/C compressor mounting bracket retaining bolts | 25 | 18 | - |
| A/C manifold retaining bolt | 20 | 15 | - |
| Camshaft bearing caps retaining bolts | A | - | - |
| Camshaft position sensor retaining bolt | 7 | - | 62 |
| Connecting rod cap retaining bolts | A | - | - |
| Coolant by-pass tube to cylinder head retaining bolts | 10 | 7 | - |
| Crankshaft position sensor retaining bolt | 10 | 7 | - |
| Crankshaft pulley retaining bolt | A | - | - |
| Cylinder head retaining bolts | A | - | - |
| Engine ground strap retaining bolt | 10 | 7 | - |
| Engine front cover retaining bolts | A | - | - |
| Engine mounting bracket retaining bolts | 40 | 30 | - |
| Engine mount bracket to engine mount retaining nuts | 55 | 40 | - |
| Engine mount retaining bolts to crossmember retaining nuts | 63 | 46 | - |
| Engine mount/oil filter housing retaining bolts | A | - | - |
| Engine wiring harness retaining bracket | 7 | - | 62 |
| Exhaust manifold heat shield retaining bolts | 10 | 7 | - |
| Exhaust manifold retaining studs | 9 | - | 80 |
| Exhaust manifold retaining nuts | A | - | - |
| Flywheel retaining bolts | 80 | 59 | - |
| Flexplate retaining bolts | 80 | 59 | - |
| Generator retaining bolts | 48 | 35 | - |
| Ignition coils retaining bolts | 7 | - | 62 |
| Knock sensor retaining bolts | 25 | 18 | - |
| Lower cylinder block retaining bolts | A | - | - |
| Lower intake manifold retaining bolts | A | - | - |
| Oil level indicator tube retaining bolt | 10 | 7 | - |
| Oil pan retaining bolts | A | - | - |
| Oil pan drain plug | 24 | 18 | - |
| Oil pressure sensor | 16 | 12 | - |
| Oil pump to engine block retaining bolts | 10 | 7 | - |
| Oil separator blanking plate | 10 | 7 | - |
| Oil temperature sensor | 14 | 10 | - |
| Power steering pump retaining bolts | 25 | 18 | - |
| Spark plugs | 15 | 11 | - |
| Timing chain guide retaining bolts | A | - | - |
| Timing chain tensioner retaining bolts | 25 | 18 | - |
| Upper intake manifold retaining bolts | A | - | - |
| Upper intake manifold support retaining bolts | 10 | 7 | - |
| Variable camshaft timing oil control unit retaining bolt | 40 + 90° | 30 + 90° | - |
| Valve cover studs and retaining bolts | A | - | - |
| Water pump retaining bolts | 25 | 18 | - |
| Wiring harness to valve cover retaining nuts | 10 | 7 | - |
| A = refer to the procedure for correct torque sequence | - | - | - |

GETtheMANUALS.org

# Engine - 2.5L NA V6 - AJV6 / 3.0L NA V6 - AJ27 - Engine

Description and Operation

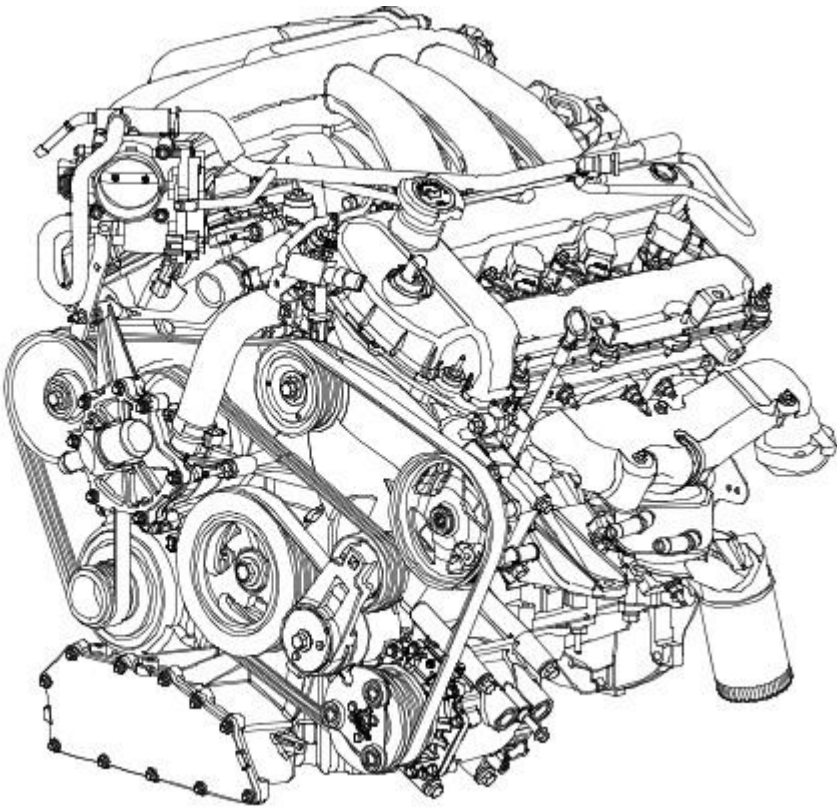

E 30898

The 2.5 and 3.0 litre 24 valve V6 engine has four overhead camshafts and are driven by two timing chains. The engine incorporates electronic engine management with distributorless ignition system, sequential electronic fuel injection. It also has two catalytic converters in the exhaust system which includes two oxygen sensors and two catalytic monitor sensors.

Viewed from the driving position, the right-hand cylinder bank is numbered 1 to 3, from the front of the vehicle and the left-hand cylinder bank are numbered 4 to 6, from the front of the vehicle.

The engines include the following:

- Vehicles fitted with 2.5L engine 10.3:1 Compression ratio.
- Vehicles fitted with 3.0L engine 10.5:1 Compression ratio.
- 3 Stage variable geometry intake manifold.
- Lightweight valve gear.
- Unique camshaft lift and duration.
- Twin knock sensor engine management control.
- Fully variable camshaft timing (VCT) system.
- Twin mass flywheel (manual transmission).

## Variable Intake System (V.I.S).

The variable intake system consists of a three stage upper intake manifold assembly, two position electronically driven gate valves and an engine management powertrain control system.

The engine control module (ECM) switches the intake manifold tuning valves between fully open and fully closed at calibrated engine speeds.

The intake manifold efficiency is therefore increased which will also increase the engine torque and engine performance.

## Variable Camshaft Timing (VCT)

Oil is supplied to the front of each VCT actuator via the spider bracket assembly which contains the VCT actuator solenoid, supply oil galleries and timing chain guide. Oil pressure advances and retards the camshaft timing which is controlled by the engine management system via a solenoid valve mounted on top of the oil feed spider assembly. Camshaft timing, dependant on engine speed, load and oil temperature can be optimised over the adjustment range of 30 degrees.

## Engine Lubrication System

The engine lubrication system is of the force-feed type in which oil is supplied under full pressure to the:

- Crankshaft main bearings.
- Crankshaft thrust main bearing.
- Connecting rod bearings.
- Valve shims.
- Camshaft bearings.
- Variable camshaft timing.

All other parts are lubricated by gravity flow or splash of the oil.

## Oil Pump

GETtheMANUALS.org

The rotary oil pump develops the oil pressure:

- The oil pump is located at the front of the crankshaft.
- The oil pump is driven by the crankshaft.
- A full flow oil filter is externally mounted on the oil filter housing.

If the filter element should become blocked a spring-loaded bypass valve will open and allow an uninterrupted flow of oil to the engine.

GETtheMANUALS.org

# Engine - 2.5L NA V6 - AJV6 / 3.0L NA V6 - AJ27 - Engine

Diagnosis and Testing

For additional information, refer toSection 303-00 Engine System - General Information.

GETtheMANUALS.org

# Engine - 2.5L NA V6 - AJV6 / 3.0L NA V6 - AJ27 - Valve Clearance Adjustment

General Procedures

1. Remove the left-hand valve cover.
   For additional information, refer to Valve Cover LH in this section.
2. Remove the right-hand valve cover.
   For additional information, refer to Valve Cover RH in this section.
3. Turn the crankshaft pulley clockwise to position the relevent camshaft lobe 180 degrees to the shim being replaced.
4. Remove the camshaft bearing cap.

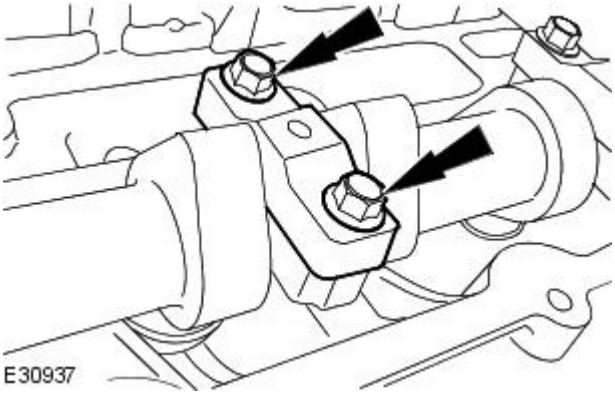


5. Install the special tool.
   - Making sure the legs of the tool are in contact with the edge of the valve bucket, compress the bucket.

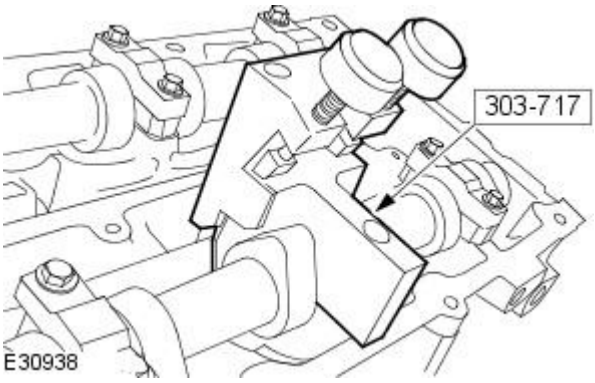


6. Use compressed air to remove the shims that require replacing.
   - Blow compressed air between the shim edge and bucket to dislodge the shim.
7. Use the following formula to calculate the required shim thickness.
   - Original shim thickness + measured clearance - desired clearance = required shim thickness.
8. Apply a light coat of engine oil to the replacement shim(s) and install.
9. Install the left-hand valve cover.
   For additional information, refer to Valve Cover LH in this section.
10. Install the right-hand valve cover.
    For additional information, refer to Valve Cover RH in this section.

GETtheMANUALS.org

# Engine - 2.5L NA V6 - AJV6 / 3.0L NA V6 - AJ27 - Valve Clearance Check

General Procedures

1. Remove the left-hand valve cover. For additional information, refer to Valve Cover—LH.
2. Remove the right-hand valve cover. For additional information, refer to Valve Cover—RH.
3. CAUTIONS:

   Rotating the crankshaft in a counterclockwise direction may cause engine damage. Crankshaft journals are directionally machined. Rotating the crankshaft counterclockwise Can raise burrs on bearing surfaces, reducing engine life.

   Camshaft lobes must be 180 degrees away from each valve tappet or valve clearance will be incorrect.

   Rotate the engine clockwise to position the camshaft lobe away from the shim surface.

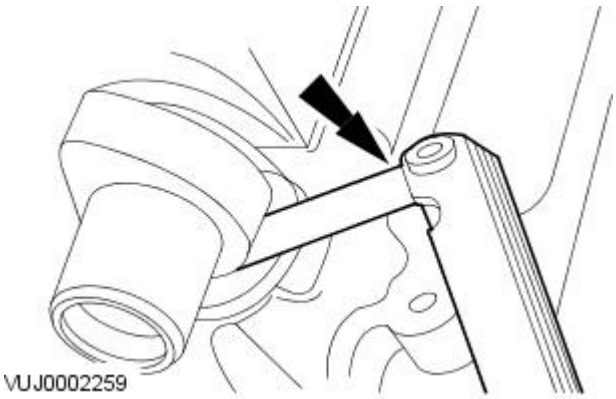


4. Using the feeler gauge set, measure the clearance between the camshaft and the shim surface. Record and check the readings. For additional information, refer to Section 303-00 Engine System - General Information.

   Adjust the clearances as necessary. For additional information, refer toValve—Clearance Adjustment.

5. Install the right-hand valve cover. For additional information, refer to Valve Cover—RH.
6. Install the left-hand valve cover. For additional information, refer to Valve Cover—LH.

GETtheMANUALS.org

# Engine - 2.5L NA V6 - AJV6 / 3.0L NA V6 - AJ27 - Camshafts LH

In-vehicle Repair

## Removal

1. Remove the timing drive components.
   For additional information, refer to Timing Drive Components in this section.
2. Remove the camshaft bearing caps evenly.

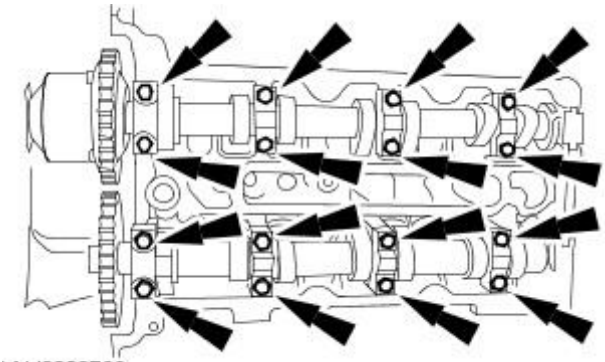

VUJ0003766

3. Remove the camshafts.

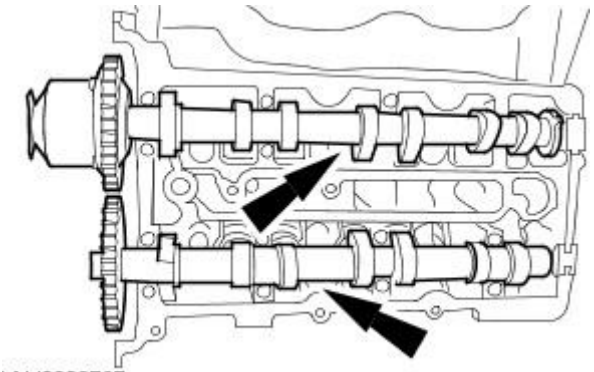

VUJ0003767

## Installation

1. NOTE: Lubricate the camshafts and the camshaft bearing caps with oil meeting Jaguar specification prior to installation.

   Install the camshafts.

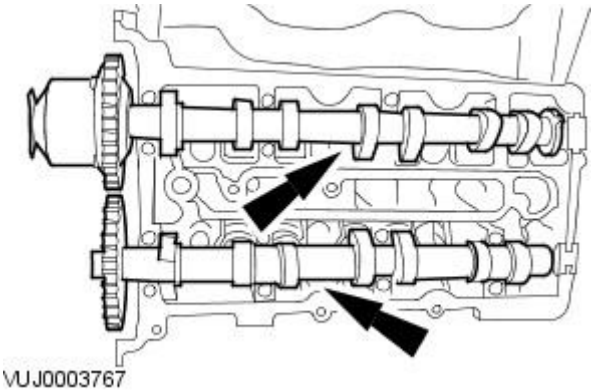

VUJ0003767

2. CAUTION: Do not install the cylinder head camshaft journal thrust caps until the camshaft journal caps are installed or damage to the thrust caps may occur.

   Install the camshaft bearing caps in their original position.

   - Install the camshaft bearing cap retaining bolts evenly.
   - Tighten the retaining bolts in the sequence shown to 10 Nm.

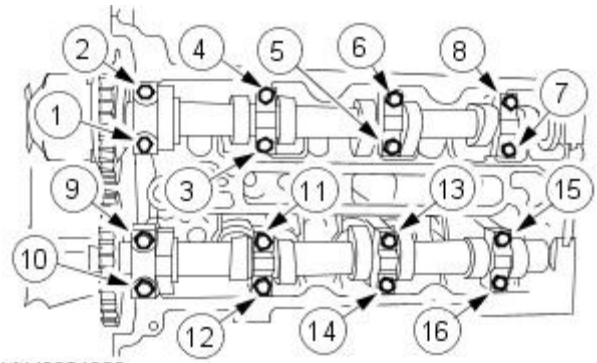


VUJ0004303

3. Carry out a valve clearance check. For additional information, refer to Valve Clearance Check.
4. Install the timing drive components.
   For additional information, refer to Timing Drive Components in this section.

GETtheMANUALS.org

# Engine - 2.5L NA V6 - AJV6 / 3.0L NA V6 - AJ27 - Crankshaft Front Seal

In-vehicle Repair

| Special Tool(s) | |
|---|---|
| 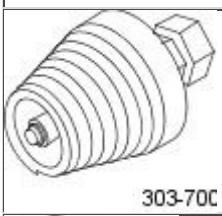  | Crankshaft Front Seal Remover<br><br>303-700 |
| 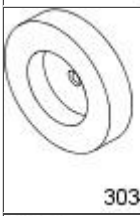  | Crankshaft Front Seal Installer<br><br>303-542 |
| 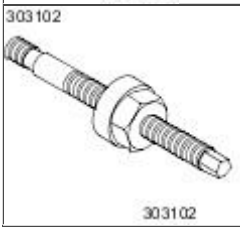  | Crankshaft pulley installer<br><br>303-102 |

## Removal

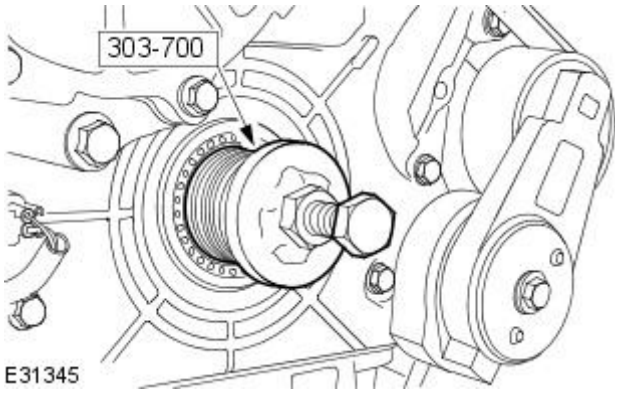


1. Remove the crankshaft pulley.
   For additional information, refer to Crankshaft Pulley in this section.
2. Using the special tool, remove and discard crankshaft front seal.

## Installation

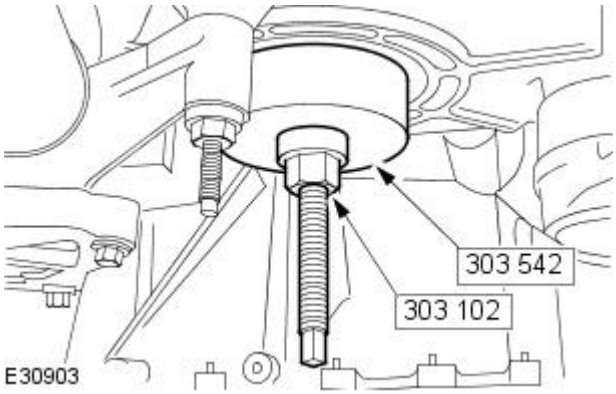


1. Using the special tools, install the crankshaft front oil seal.
   - Lubricate the seal lip with clean engine oil.
2. Install the crankshaft vibration damper.
   For additional information, refer to Crankshaft Pulley in this section.

GETtheMANUALS.org

# Engine - 2.5L NA V6 - AJV6 / 3.0L NA V6 - AJ27 - Crankshaft Pulley

In-vehicle Repair

| Special Tool(s) | |
|---|---|
| 303D055 | Wrench strap-universal<br><br>303-D055 |
| 303D121 | Crankshaft Pulley Remover<br><br>303-D121 |
| 303102 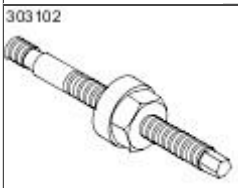 303102 | Crankshaft Pulley Installer<br><br>303-102 |
| 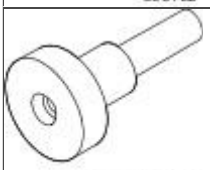 303D12101 | Trust Pad<br><br>303-D121-01 |
| 303-335/2 | Crankshaft pulley installer<br><br>303-335/2 |

## Removal

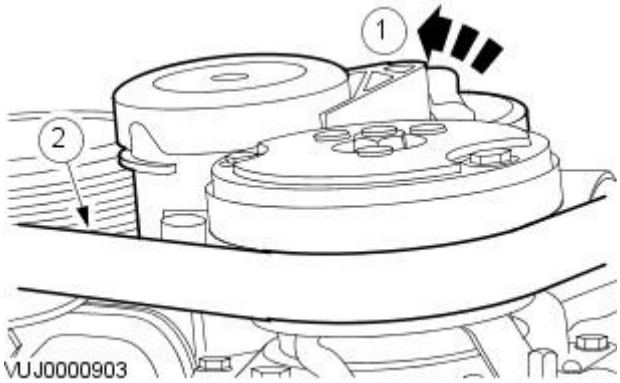


1. Disconnect the battery ground cable.
   For additional information, refer to Section 414-01 Battery, Mounting and Cables.
2. Carry out the cooling system draining procedure. For additional information, refer to Section 303-03A Engine Cooling / 303-03B Supercharger Cooling / 303-03C Engine Cooling.
3. Remove the accessory drivebelt.
   1. Rotate the belt tensioner counter-clockwise.
      1. Use a 3/8 inch square drive bar to rotate the belt tensioner.
   2. Remove the accessory drivebelt.
4. Lower the vehicle.
5. Remove the throttle body. For additional information, refer to Section 303-04A Fuel Charging and Controls / 303-04B Fuel Charging and Controls / 303-04C Fuel Charging and Controls / 303-04D Fuel Charging and Controls - Turbocharger.

GETtheMANUALS.org

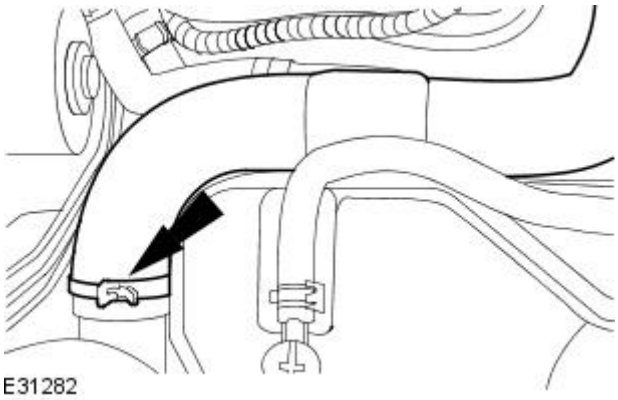


**6.** Disconnect the radiator top coolant hose.

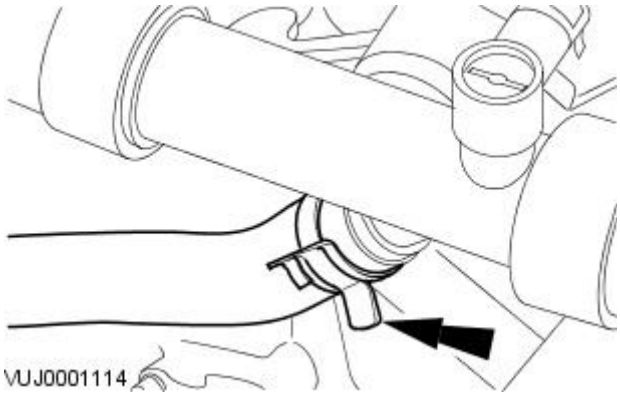


**7.** Disconnect the coolant hose from the top coolant hose assembly.

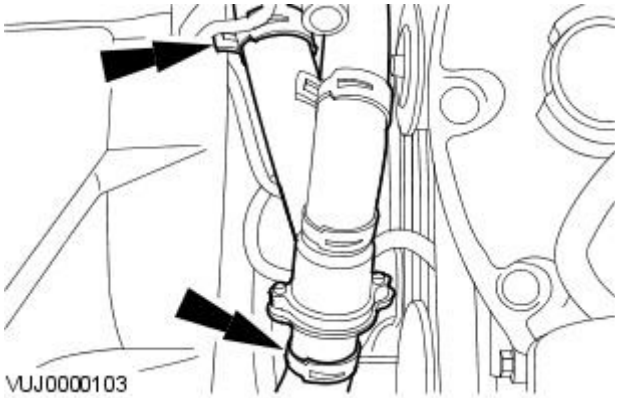


**8.** Disconnect the hose assembly from the water pump and lower hose.

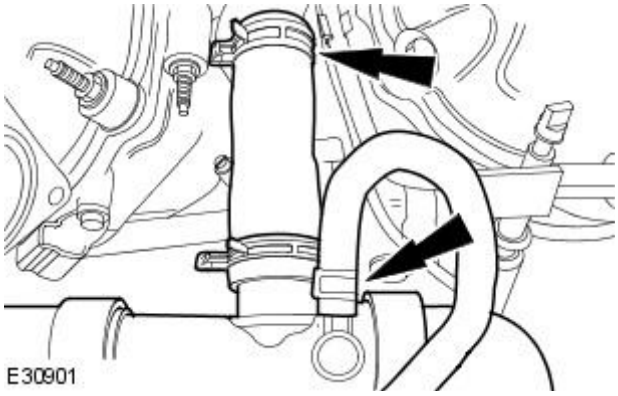


**9.** Remove the hose assembly.

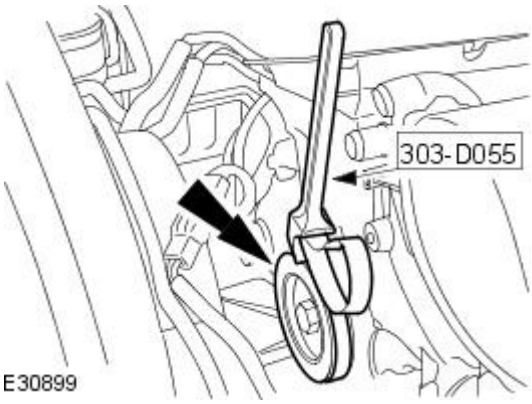


**10.** Install the special tool.

GETtheMANUALS.org

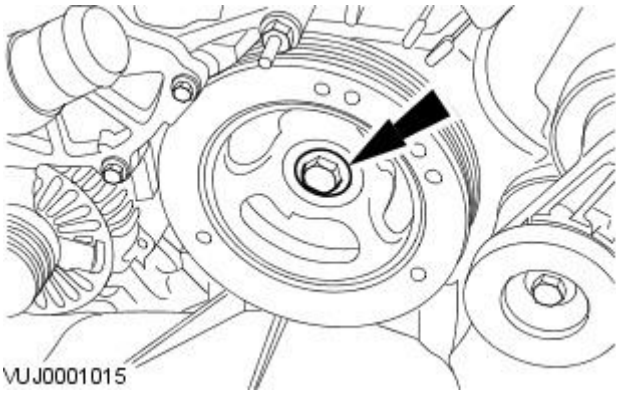


**11.** Remove the crankshaft pulley retaining bolt.

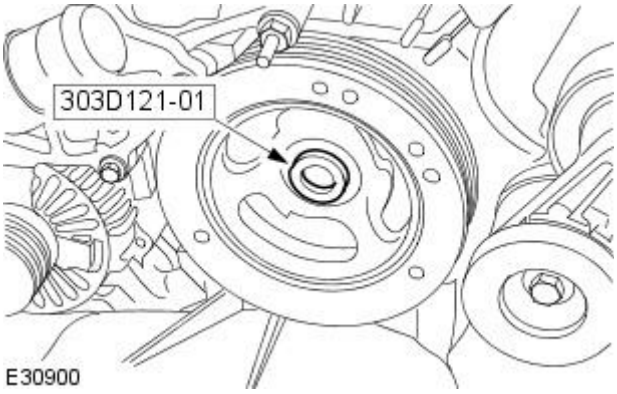


**12.** Install the special tool.

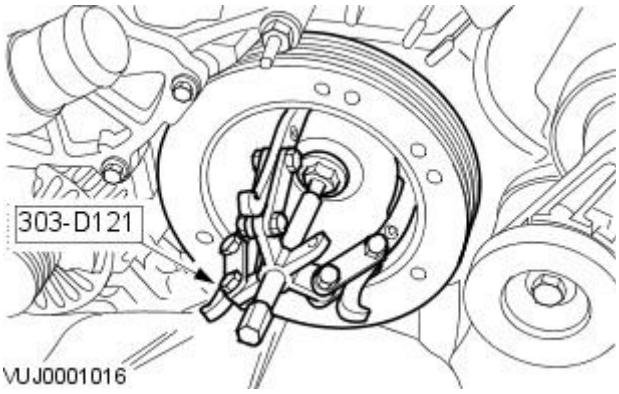


**13.** Using the special tools, remove the crankshaft pulley.

## Installation

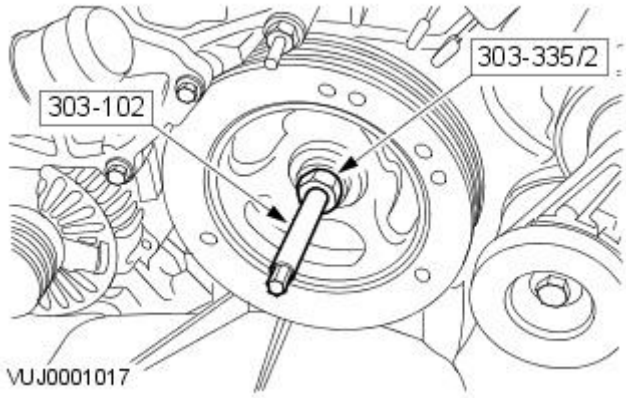


**1.** Using the special tools, install the crankshaft pulley.

- Coat the crankshaft pulley keyway with silicone gasket sealant meeting Jaguar specification.
- Coat the sealing surfaces of the crankshaft pulley with silicone gasket sealant meeting Jaguar specification.

GETtheMANUALS.org

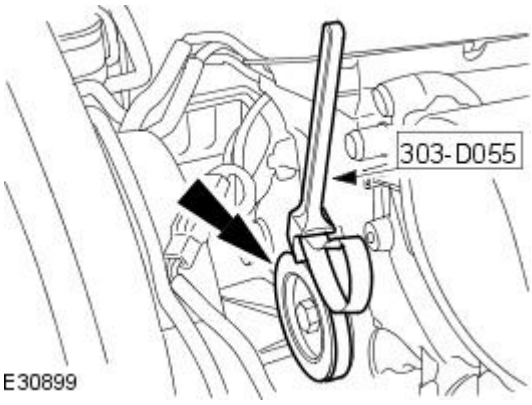


**2.** Install the special tool.

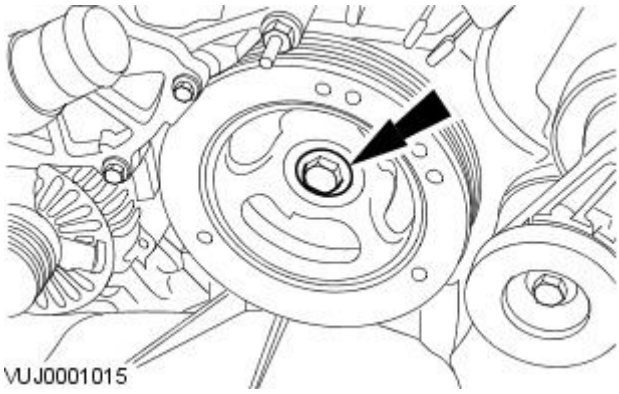


**3.** Install the crankshaft pulley bolt.

- Torque to 120 Nm.
- Loosen the bolt (minimum 1 turn).
- Torque to 50 Nm.
- Angle Torque to 90°.

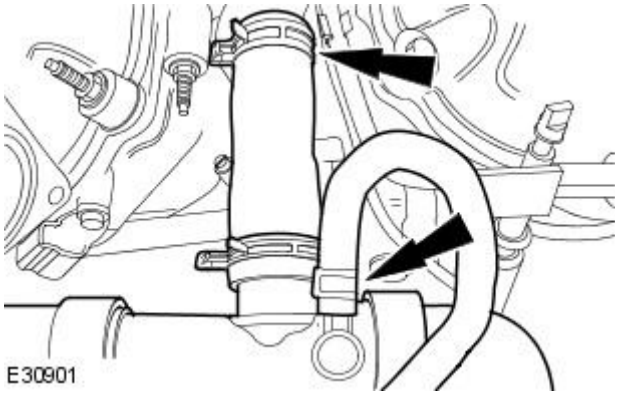


**4.** Install the hose assembly.

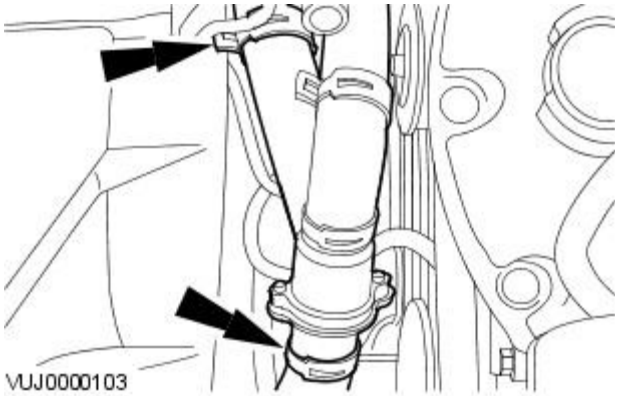


**5.** Install the hose assembly to the water pump and lower hose.

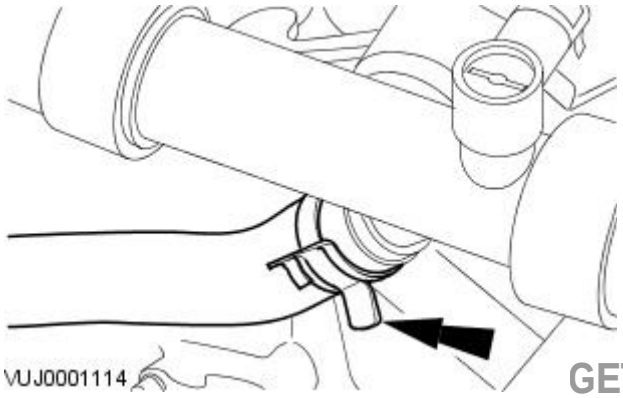


**6.** Install the coolant hose to the housing assembly.

GETtheMANUALS.org

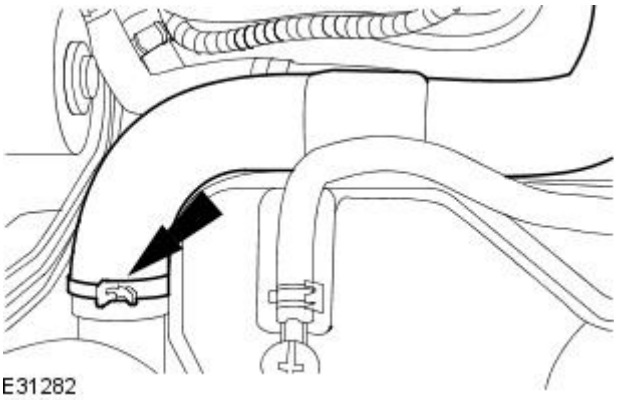


7. Connect the radiator top coolant hose.

8. Install the throttle body. For additional information, refer to Section 303-04A Fuel Charging and Controls / 303-04B Fuel Charging and Controls / 303-04C Fuel Charging and Controls / 303-04D Fuel Charging and Controls - Turbocharger.

9. Raise the vehicle.

10. Install the accessory drivebelt.

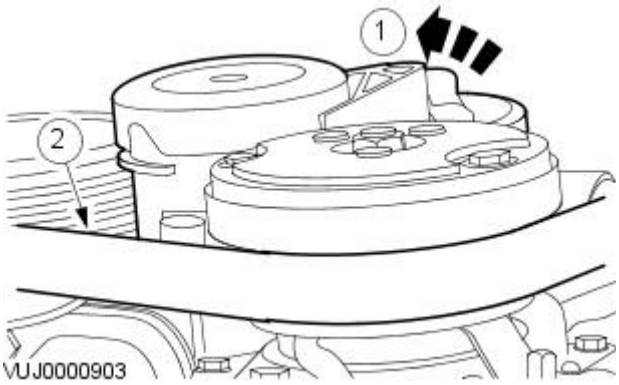


1. Rotate the belt tensioner counter-clockwise.
    1. Use a 3/8 inch square drive bar to rotate the belt tensioner.
2. Install the accessory drivebelt.

11. Lower the vehicle.

12. Connect the battery ground cable.
    For additional information, refer to Section 414-01 Battery, Mounting and Cables.

13. Carry out the cooling system filling and bleeding procedure. For additional information, refer to Section 303-03A Engine Cooling / 303-03B Supercharger Cooling / 303-03C Engine Cooling.

GETtheMANUALS.org

# Engine - 2.5L NA V6 - AJV6 / 3.0L NA V6 - AJ27 - Crankshaft Rear Seal

In-vehicle Repair

| Special Tool(s) | |
|---|---|
| 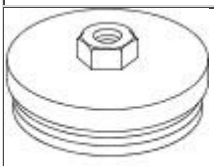 303566 | Crankshaft Rear Seal Remover<br><br>303-566 |
| 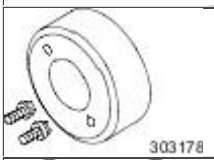 303178 | Crankshaft Rear Seal Installer<br><br>303-178 |
| 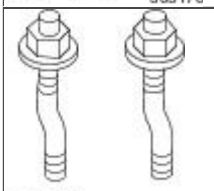 303384 | Crankshaft Rear Seal Installer Adapter Bolts<br><br>303-384 |
| 303102 303102 | Crankshaft Rear Seal Installer Draw Bolts<br><br>303-102 |

## Removal

Vehicles With Manual Transmission

1. Remove the flywheel. For additional information, refer to Flywheel —Manual Transmission.

Vehicles With Automatic Transmission

2. Remove the flexplate. For additional information, refer to Flexplate —Automatic Transmission.

All Vehicles

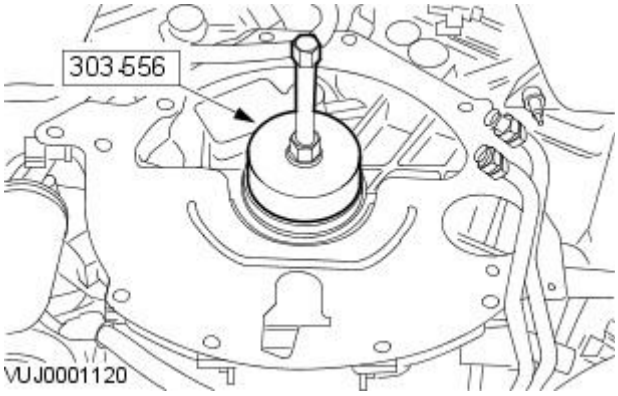


3. CAUTION: Avoid scratching or damaging the oil seal sealing surfaces on the crankshaft and cylinder block.

   Using the special tools, remove the crankshaft rear main oil seal.

## Installation

All Vehicles

1. Clean and inspect the crankshaft rear oil seal sealing surfaces.
2. Lubricate the crankshaft flange, the crankshaft rear oil bore seal, and the oil seal lip.
   - Use engine assembly lubricant or equivalent meeting Jaguar specification ESR-M99C80-A.

GETtheMANUALS.org

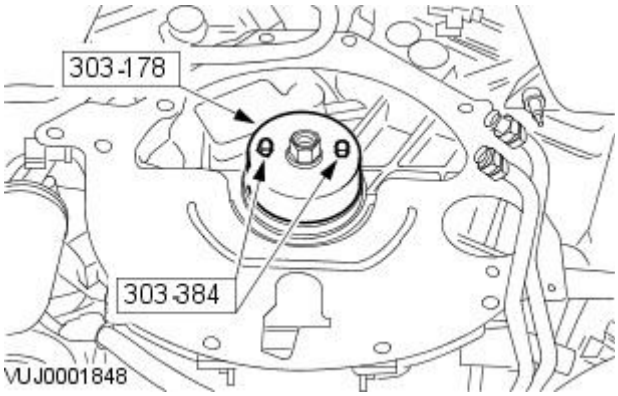


**3.** NOTE: Alternate bolt tightening to correctly seat the crankshaft rear oil seal until it is flush with the cylinder block.

Using the special tools, install the crankshaft rear oil seal.

Vehicles With Automatic Transmission

**4.** Install the flexplate. For additional information, refer to Flexplate —Automatic Transmission.

Vehicles With Manual Transmission

**5.** Install the flywheel. For additional information, refer to Flywheel —Manual Transmission.

GETtheMANUALS.org

# Engine - 2.5L NA V6 - AJV6 / 3.0L NA V6 - AJ27 - Cylinder Head

In-vehicle Repair

## Removal

RH and LH Cylinder Heads

1. Remove the left-hand and right-hand camshafts.
   For additional information, refer to Camshafts LH in this section.
2. Disconnect the coolant temperature (ECT) electrical connector.

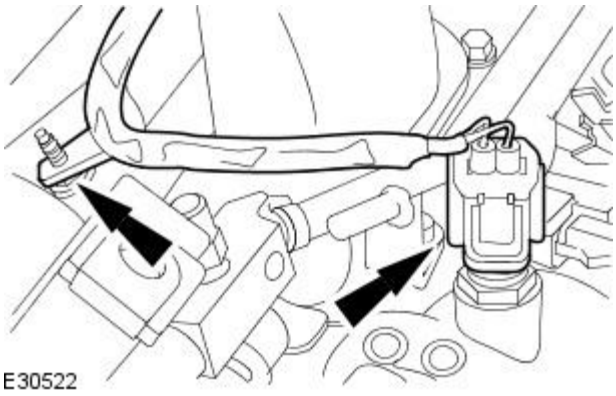


3. Disconnect the fuel pressure regulator electrical connector and vacuum hose.

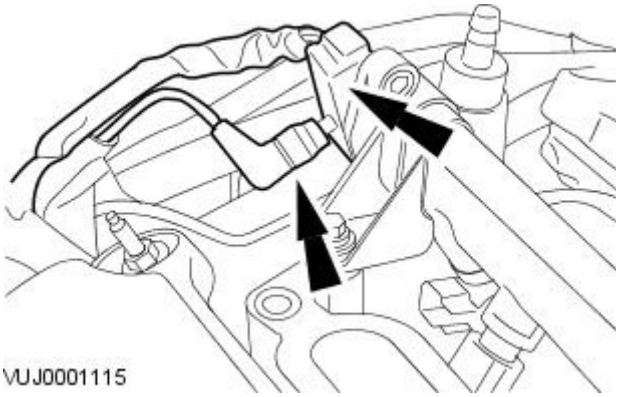


4. Remove the fuel supply manifold and lower intake manifold.
   - Remove and discard the lower intake manifold gaskets.

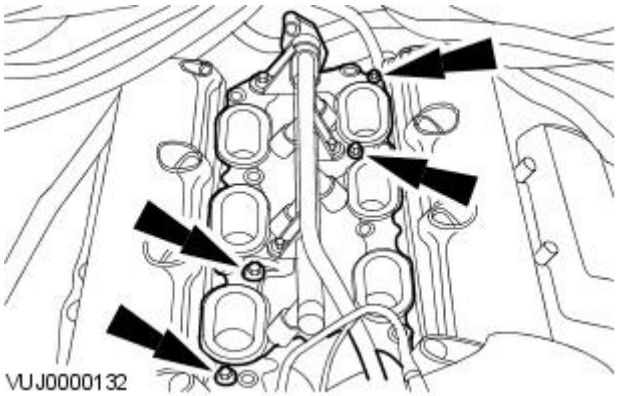


5. Remove the coolant crossover tube.
   - Discard the 'O' ring seals.

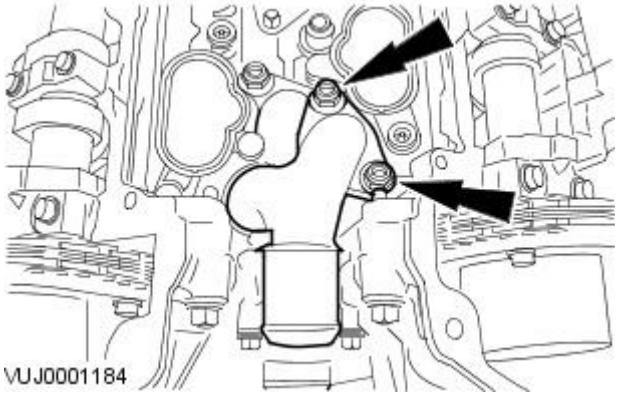


6. Remove the catalytic converters.
   For additional information, refer to Section 309-00 Exhaust System.


GETtheMANUALS.org

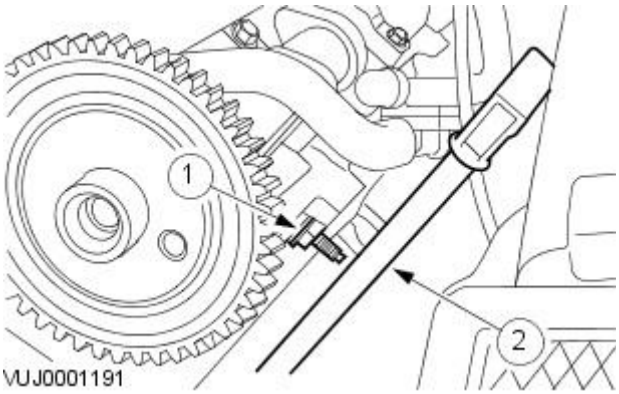


**7.** Remove the oil level indicator tube.

1. Remove the retaining nut.
2. Remove the oil level indicator tube.

**8.** Detach the engine harness earth strap from the rear of the left-hand cylinder head.

RH and LH Cylinder Heads

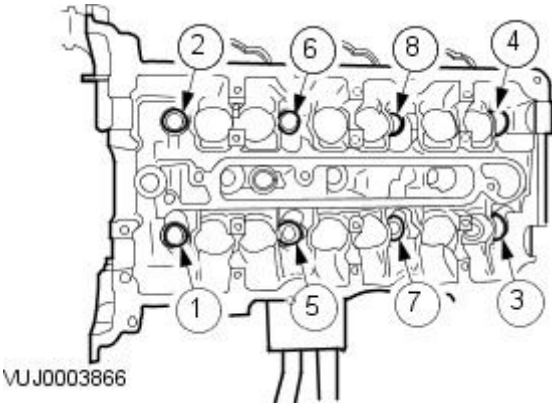


**9.** NOTE: Remove the retaining bolts in the indicated sequence.

Remove the cylinder head. (left-hand shown, right-hand similar).

- Remove and discard the cylinder head gasket.

**10.** Clean and inspect the cylinder head and cylinder block.
For additional information, refer to Section 303-00 Engine System - General Information.

## Installation

RH and LH Cylinder Heads

**1.** NOTE: The head gaskets must be installed over the cylinder head to block dowels.

Install a new cylinder head gasket.

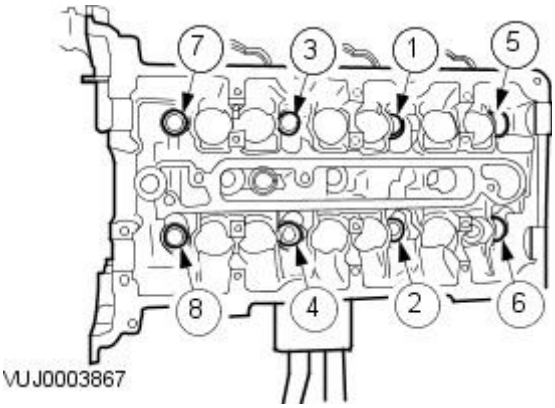


**2.** CAUTION: Use care when installing the cylinder head. Damage to the cylinder block and or the cylinder head may result.

• NOTE: Make sure the cylinder head is installed in its original position.

• NOTE: Tighten the retaining bolts in the indicated sequence in six stages.

Install the cylinder head and install new cylinder head retaining bolts and washers.

- Stage 1: tighten to 30 Nm.
- Stage 2: tighten 90 degrees.
- Stage 3: loosen 360 degrees.
- Stage 4: tighten to 30 Nm.
- Stage 5: tighten 90 degrees.
- Stage 6: tighten 90 degrees .

Cylinder Head-LH

**3.** Attach the engine harness earth strap to the rear of the left-hand cylinder head.

GETtheMANUALS.org

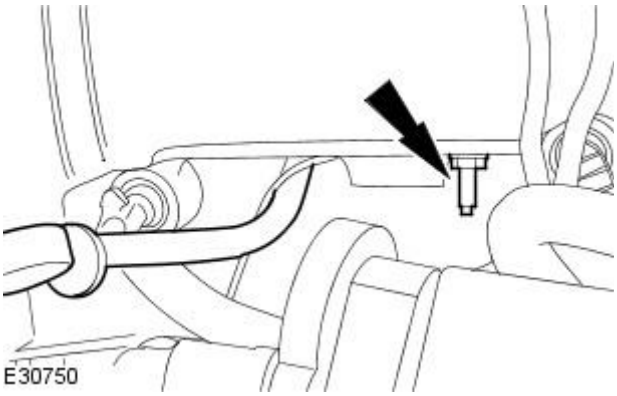


**4.** Install the oil level indicator tube.

- Tighten to 10 Nm.

RH and LH Cylinder Heads

**5.** Install the catalytic converters.
For additional information, refer to Section 309-00 Exhaust System.

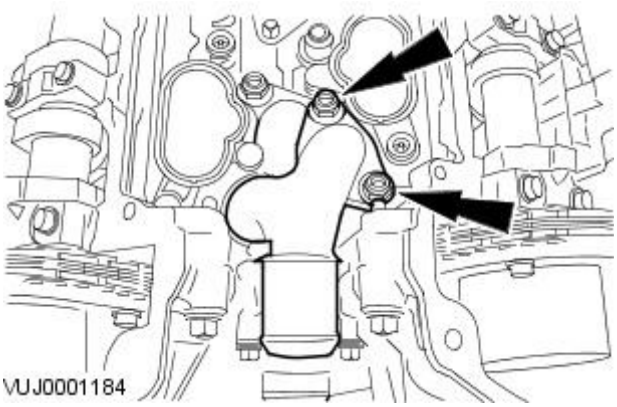


**6.** NOTE: Install new 'O' ring seals.

Install the coolant crossover tube.

- Tighten to 10 Nm.

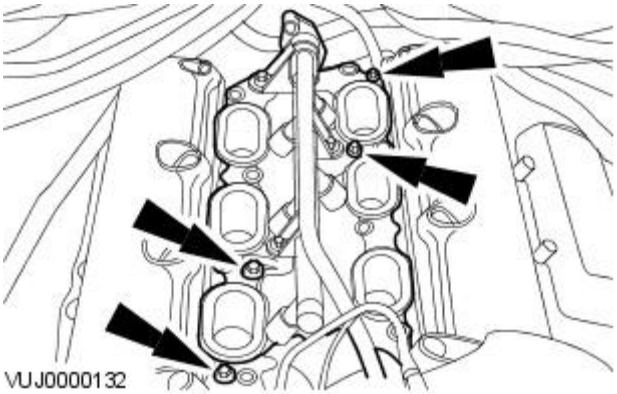


**7.** NOTE: Install new lower intake manifold gaskets.

Install the fuel supply manifold and lower intake manifold.

- Tighten to 10 Nm.

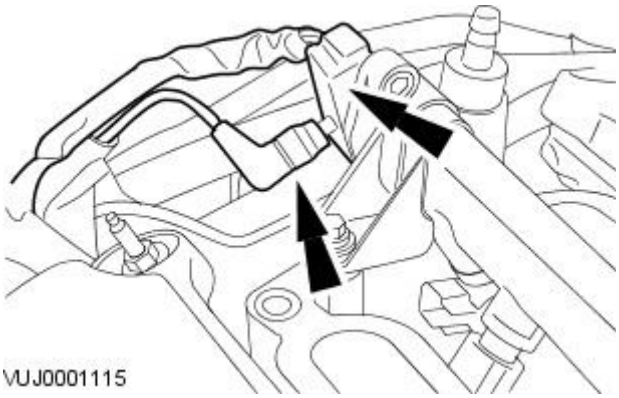


**8.** Connect the fuel pressure regulator electrical connector and vacuum hose.

GETtheMANUALS.org

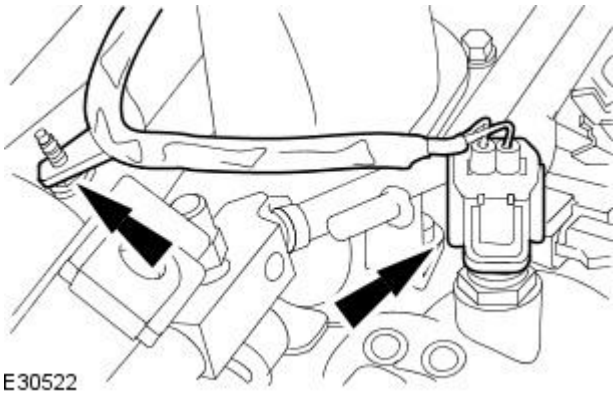


**9.** Connect the ECT electrical connector.

**10.** Install the left-hand and right-hand camshafts.
For additional information, refer to Camshafts LH in this section.

GETtheMANUALS.org

# Engine - 2.5L NA V6 - AJV6 / 3.0L NA V6 - AJ27 - Engine Front Cover

In-vehicle Repair

| Special Tool(s) | |
|---|---|
| 303D055 | Wrench strap-universal<br><br>303-D055 |
| 303D121 | Crankshaft Pulley Remover<br><br>303-D121 |
| 303102 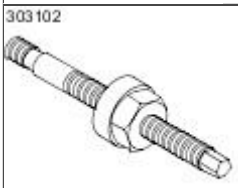 303102 | Crankshaft Pulley Installer<br><br>303-102 |
| 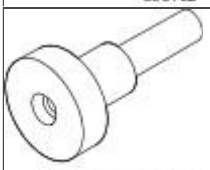 303D12101 | Trust Pad<br><br>303-D121-01 |
| 303-335/2 | Crankshaft pulley installer<br><br>303-335/2 |

## Removal

1. Remove the left-hand valve cover.
   For additional information, refer to Valve Cover LH in this section.
2. Remove the right-hand valve cover.
   For additional information, refer to Valve Cover RH in this section.
3. Remove the oil pan.
   For additional information, refer to Oil Pan in this section.
4. Carry out the cooling system draining procedure. For additional information, refer to Section 303-03A Engine Cooling / 303-03B Supercharger Cooling / 303-03C Engine Cooling.
5. Remove the accessory drivebelt.
   1. Rotate the belt tensioner counter-clockwise.
      1. Use a 3/8 inch square drive bar to rotate the belt tensioner.
   2. Remove the accessory drivebelt.

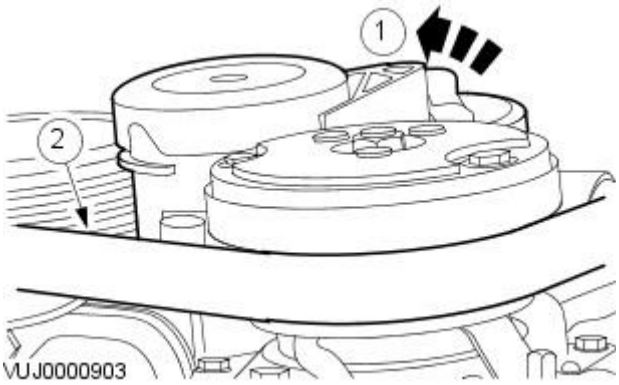


6. Lower the vehicle.

GETtheMANUALS.org

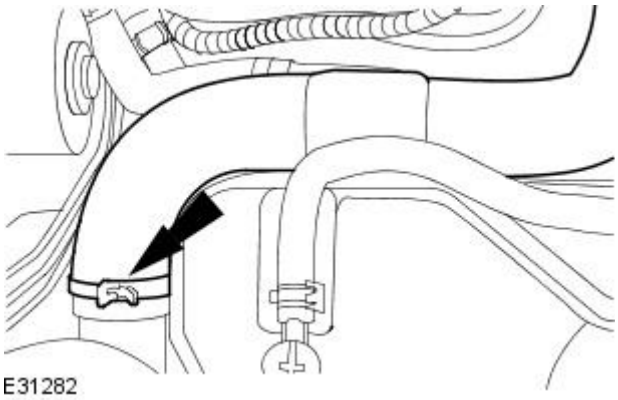


**7.** Disconnect the radiator top coolant hose.

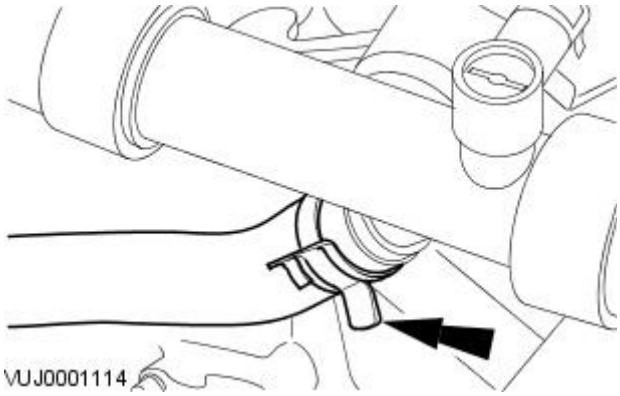


**8.** Disconnect the coolant hose from the top coolant hose assembly.

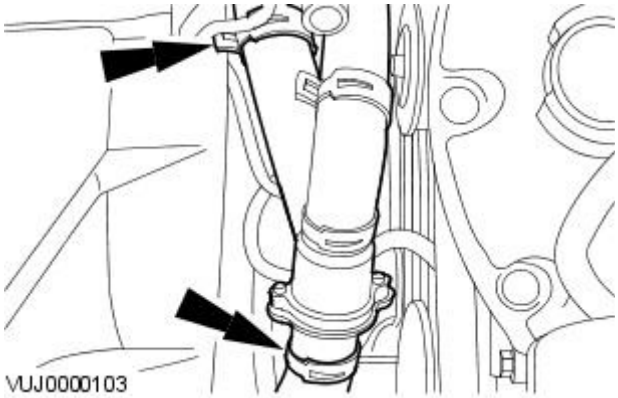


**9.** Disconnect the hose assembly from the water pump and lower hose.

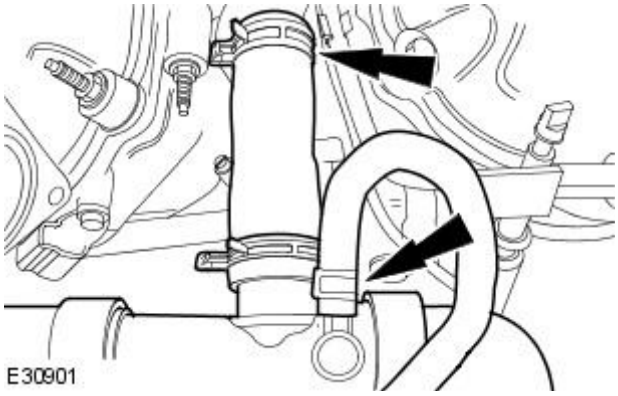


**10.** Remove the hose assembly.

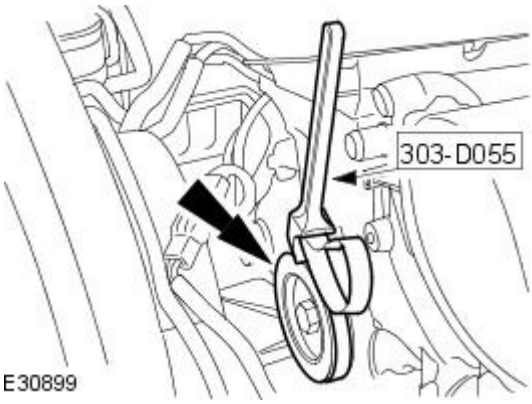


**11.** Install the special tool.

GETtheMANUALS.org

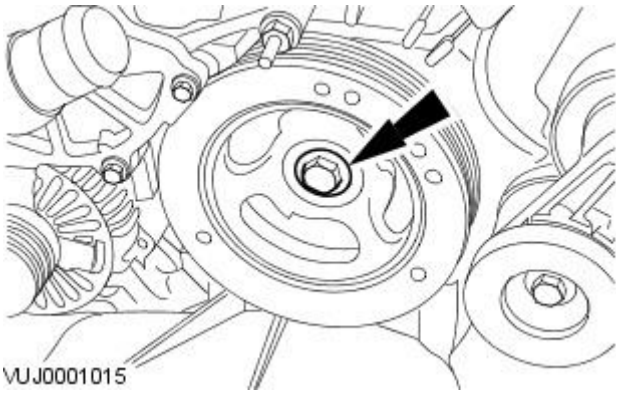


**12.** Remove the crankshaft pulley retaining bolt.

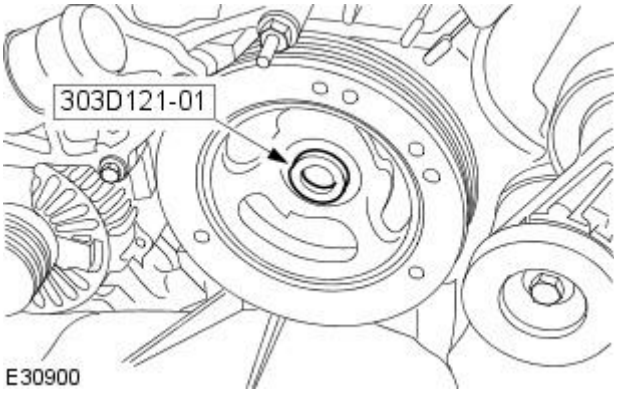


**13.** Install the special tool.

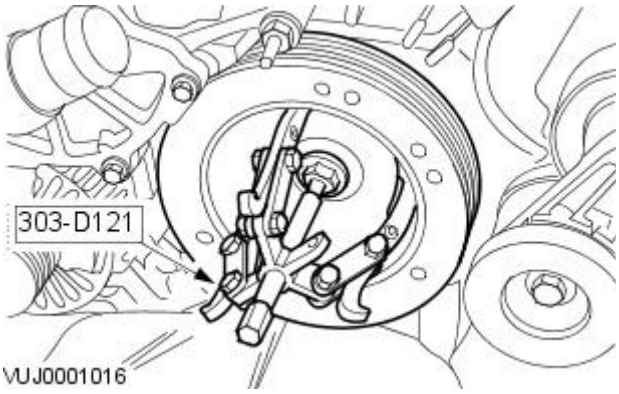


**14.** Using the special tools, remove the crankshaft pulley.

**15.** Remove the crankshaft front seal.
For additional information, refer to Crankshaft Front Seal in this section.

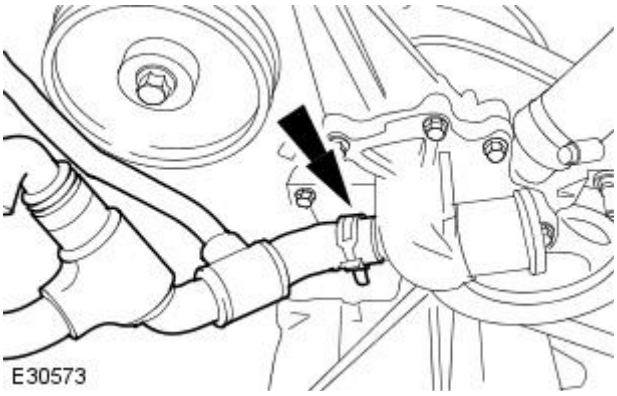


**16.** Detach the coolant hose.

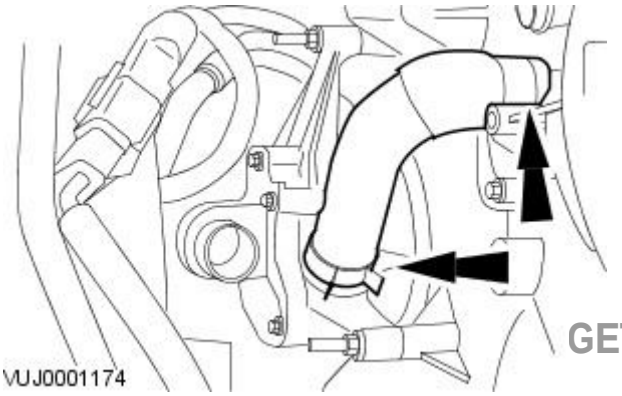


**17.** Remove the coolant hose.

GETtheMANUALS.org

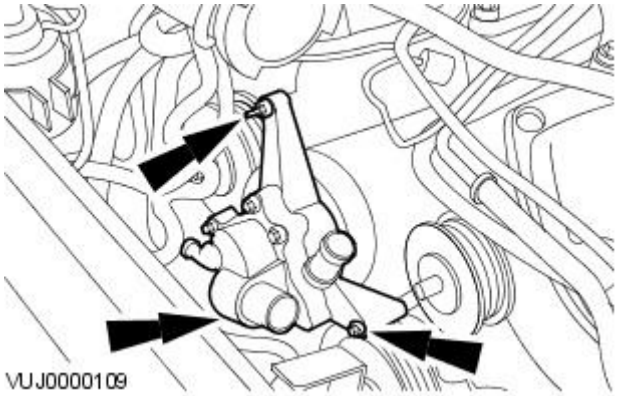


**18.** Remove the water pump.

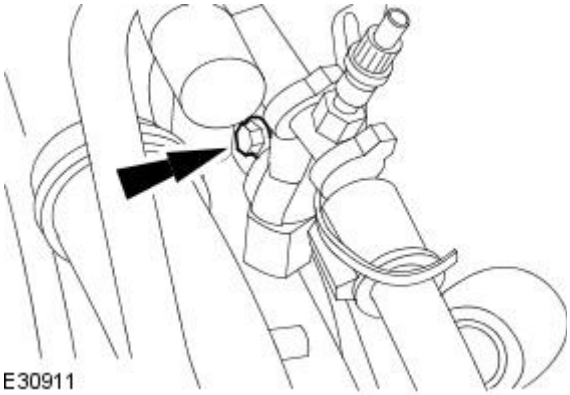


**19.** Detach the fuel supply manifold retaining bolt.

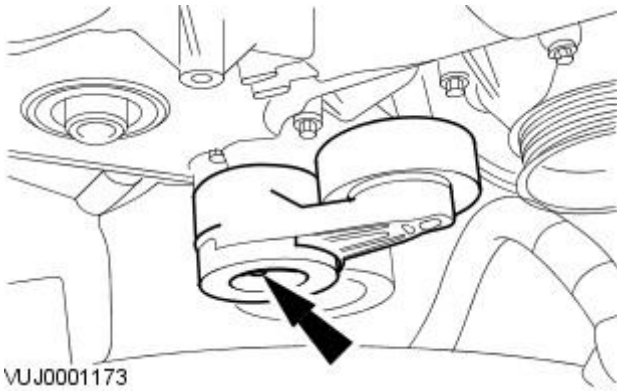


**20.** Remove the accessory drive belt tensioner.

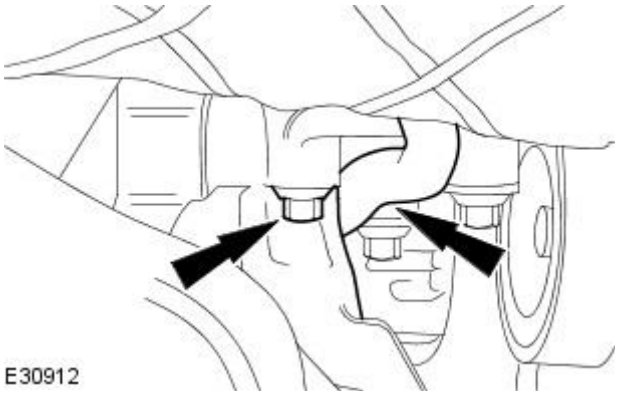


**21.** Detach the engine harness from the right-hand idler pulley.

- Detach the splash shield.
- Detach the engine harness from the right-hand idler pulley.

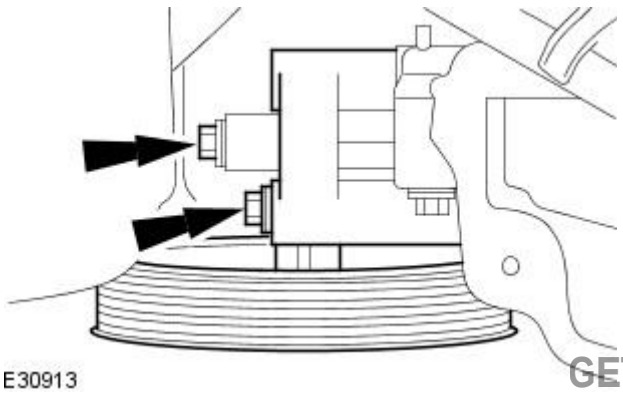


**22.** Remove the right-hand idler pulley.

GETtheMANUALS.org

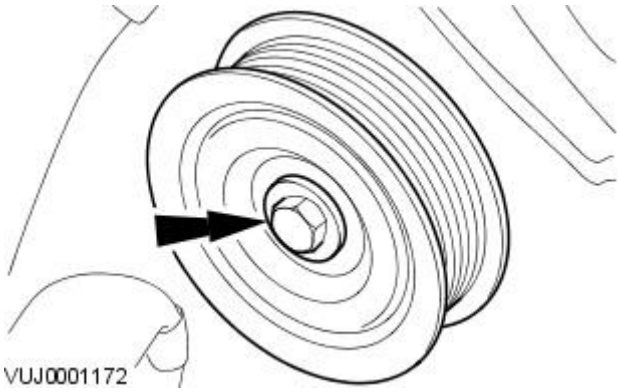


**23.** Remove the left-hand idler pulley.

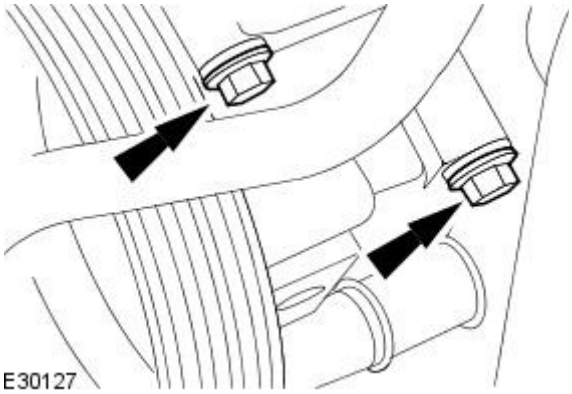


**24.** Remove the power steering pump upper retaining bolts.

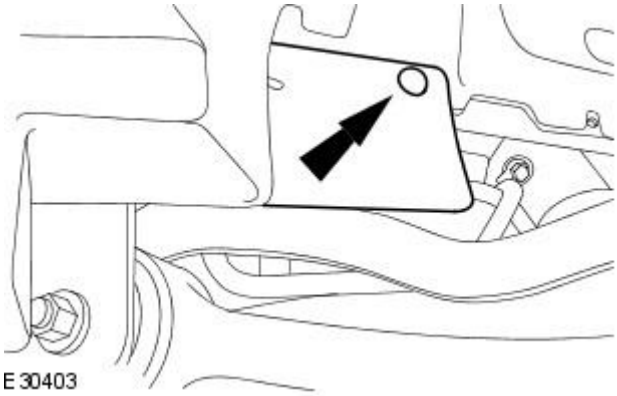


**25.** Raise the vehicle.

**26.** Reposition the splash shield.

- Remove the splash shield retaining clip.

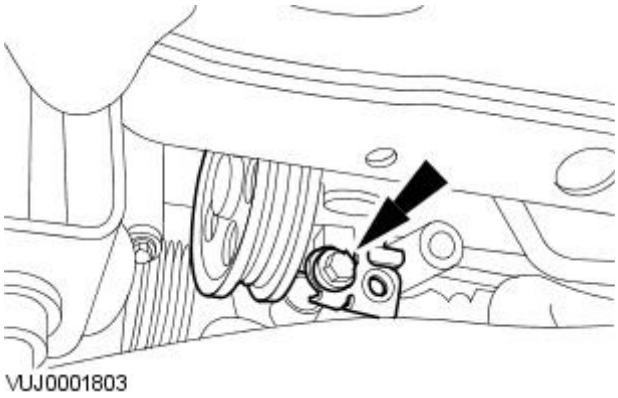


**27.** Detach the power steering pump.

**28.** Lower the vehicle.

GETtheMANUALS.org

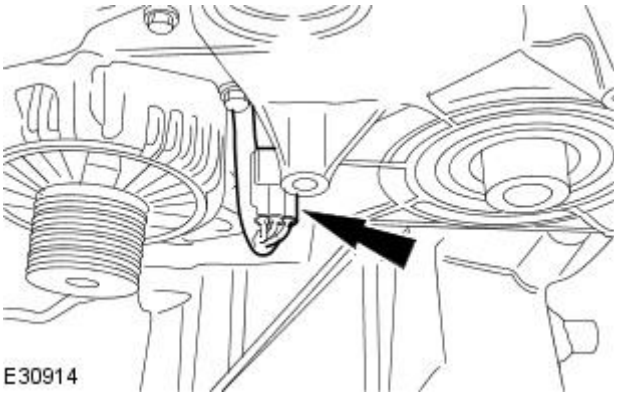


**29.** Disconnect the crankshaft position (CKP) sensor electrical connector.

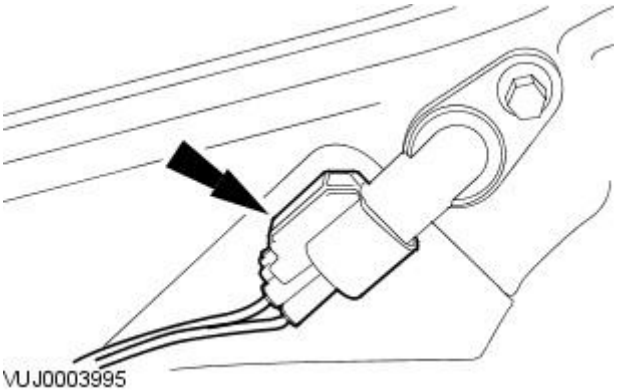


**30.** NOTE: Right-hand camshaft position sensor shown, left-hand similar.

Disconnect the camshaft position sensors.

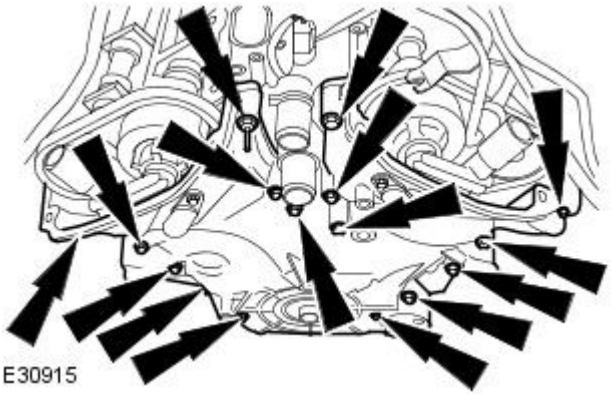


**31.** Remove the engine front cover

- Remove and discard the engine front cover gaskets.

## Installation

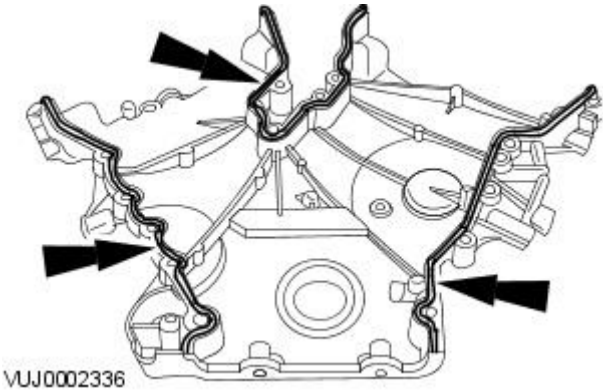


**1.** Install new engine front cover gaskets.

GETtheMANUALS.org

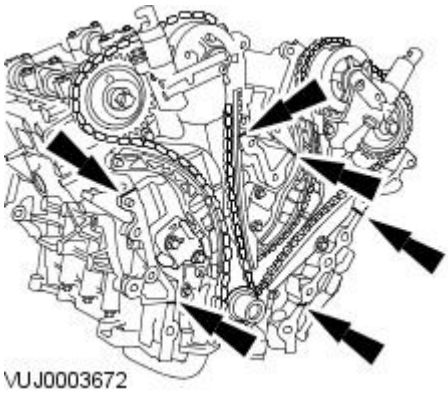


**2.** NOTE: Prior to applying sealer clean the front cover to engine block and cylinder head sealing surfaces with metal surface cleaner.

Apply a 6 mm diameter dot of silicone sealant meeting Jaguar specification to the indicated locations.

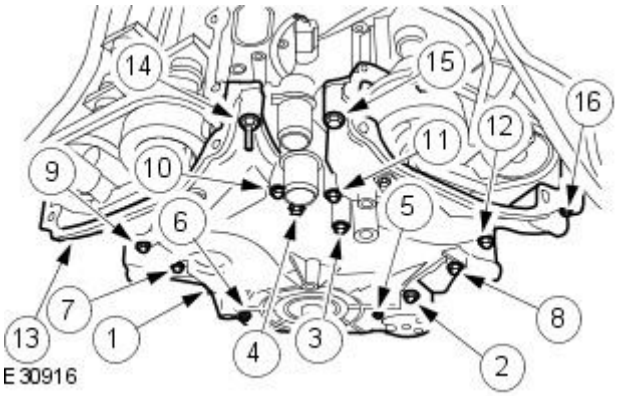


**3.** NOTE: The engine front cover retaining bolts numbered 3,4,10 and 11 are longer than the retaining bolts numbered 1,2,5,6,7,8,9,12,13,15 and 16. The retaining bolt numbered 14 is a retaining bolt with a stud head.

Install the engine front cover, completing the tightening sequence .

- Tighten to 25 Nm.

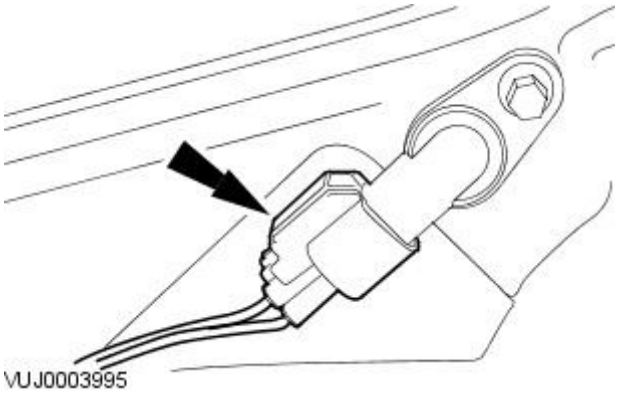


**4.** NOTE: Right-hand camshaft position sensor shown, left-hand similar.

Connect the camshaft position sensors.

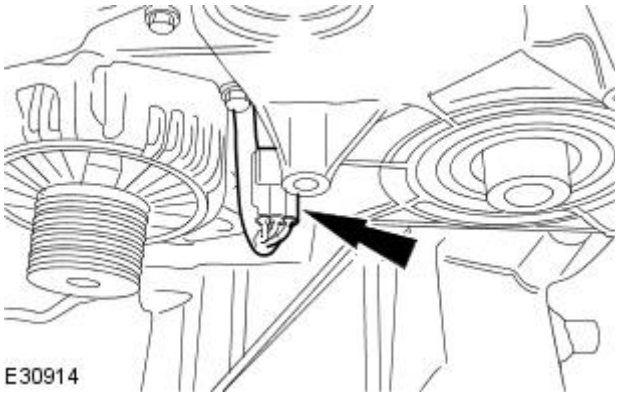


**5.** Disconnect the crankshaft position (CKP) sensor electrical connector.

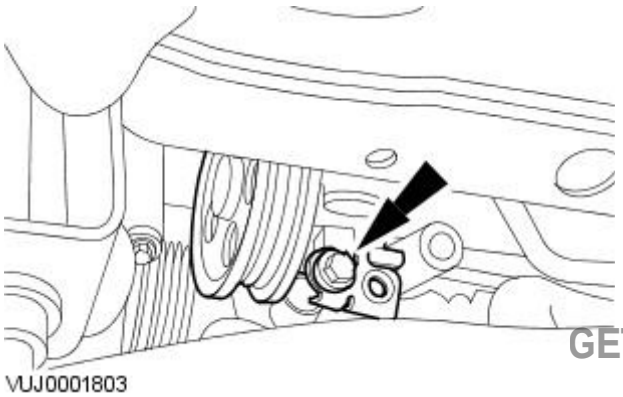


**6.** Raise the vehicle.

**7.** Attach the power steering pump.

- Tighten to 25 Nm.

GETtheMANUALS.org

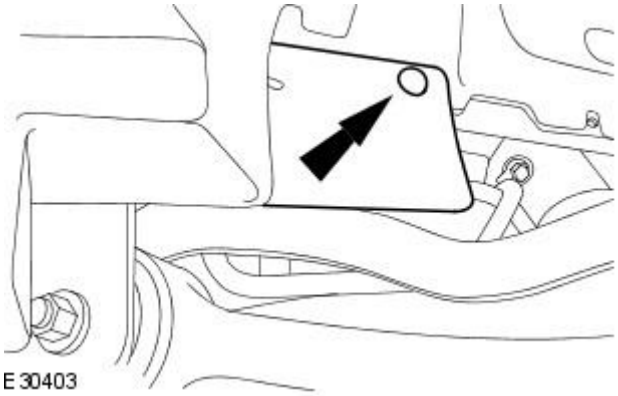


**8.** Reposition the splash shield.

- Install the splash shield retaining clip.

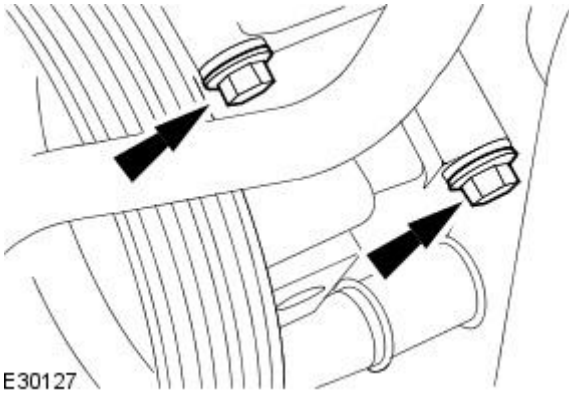


**9.** Install the power steering pump upper retaining bolts.

- Tighten to 25 Nm.

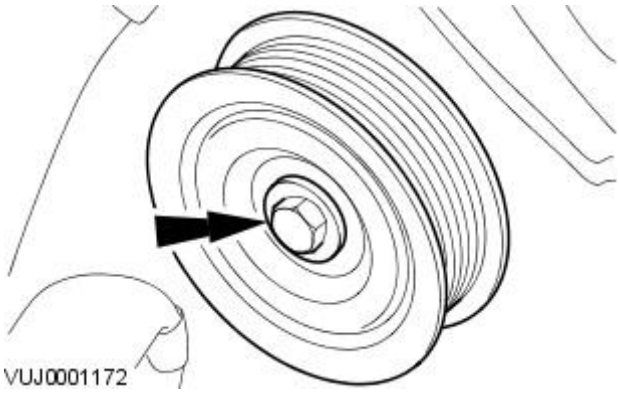


**10.** Install the left-hand idler pulley.

- Tighten to 25 Nm.

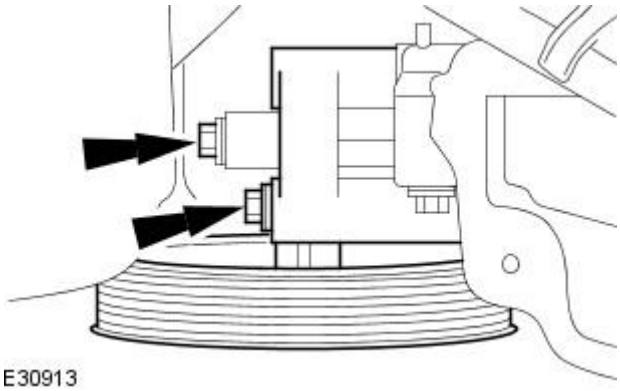


**11.** Install the right-hand idler pulley.

- Tighten to 25 Nm.

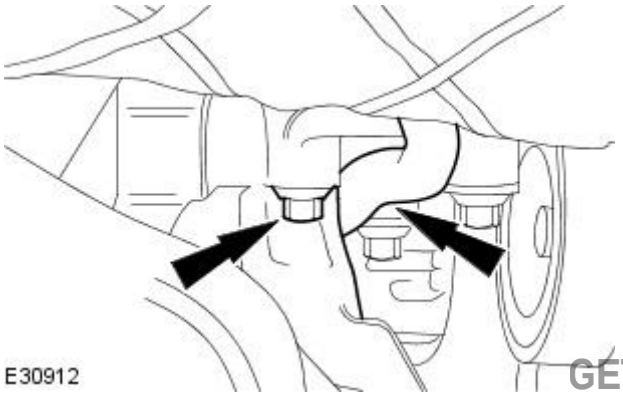


**12.** Attach the engine splash shield.

- Attach the engine harness to the right-hand idler pulley.
- Attach the engine splash shield.

GETtheMANUALS.org

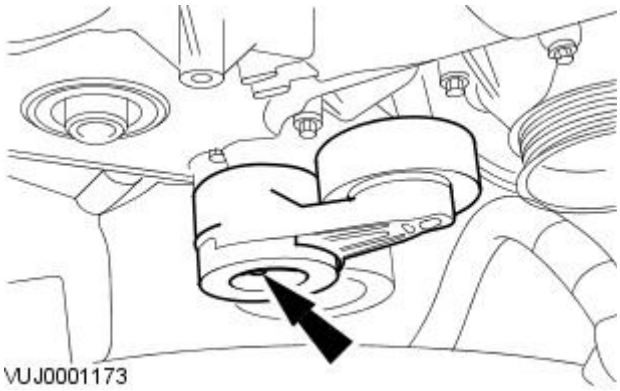


**13.** Install the accessory drive belt tensioner.

- Tighten to 45 Nm.

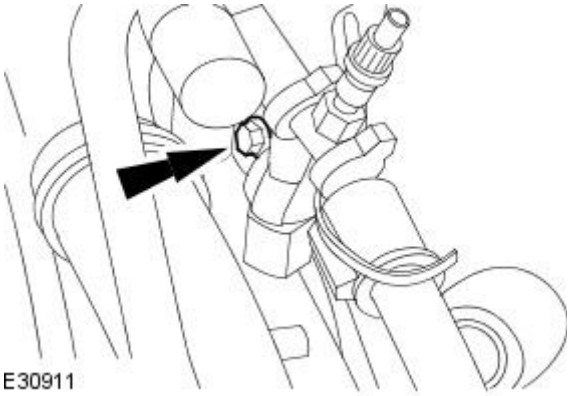


**14.** Attach the fuel supply manifold retaining bolt.

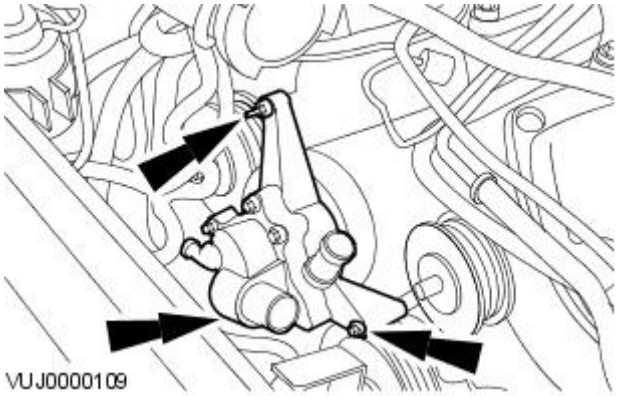


**15.** Install the water pump.

- Tighten to 25 Nm.

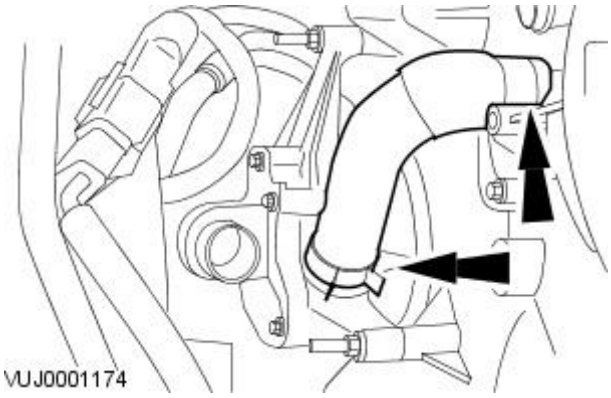


**16.** Install the coolant hose.

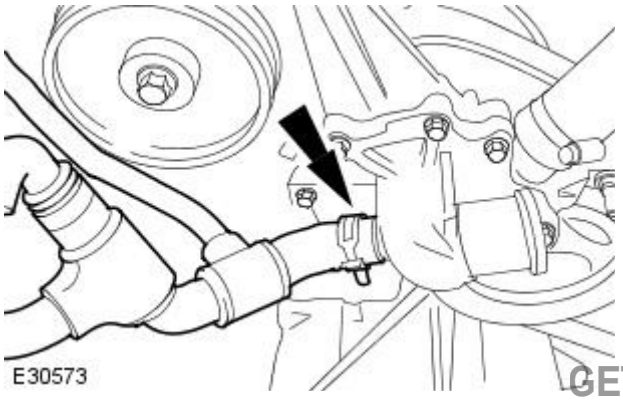


**17.** Attach the coolant hose.

GETtheMANUALS.org

**18.** Install a new crankshaft front seal.
For additional information, refer to Crankshaft Front Seal in this section.

**19.** Using the special tools, install the crankshaft pulley.

- Coat the crankshaft pulley keyway with silicone gasket sealant meeting Jaguar specification.
- Coat the sealing surfaces of the crankshaft pulley with silicone gasket sealant meeting Jaguar specification.

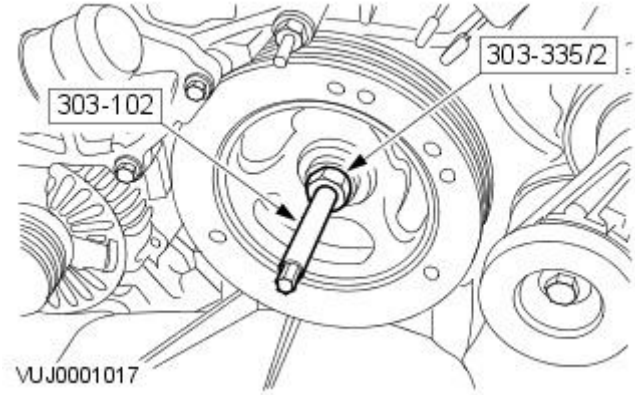


**20.** Install the special tool.

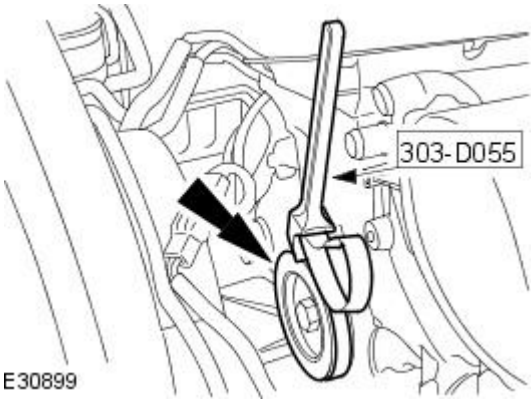


**21.** Install the crankshaft pulley bolt.

- Torque to 120 Nm.
- Loosen the bolt (minimum 1 turn).
- Torque to 50 Nm.
- Angle Torque to 90°.

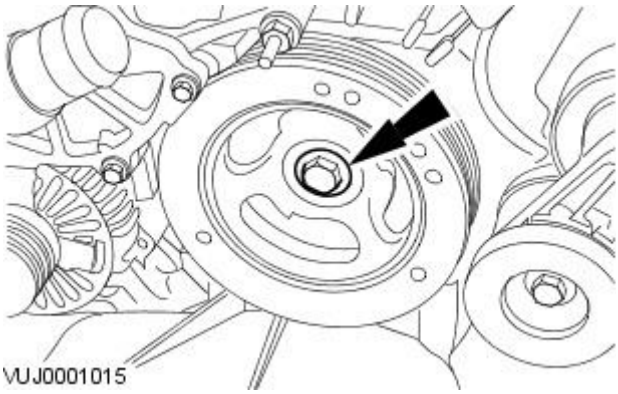


**22.** Install the hose assembly.

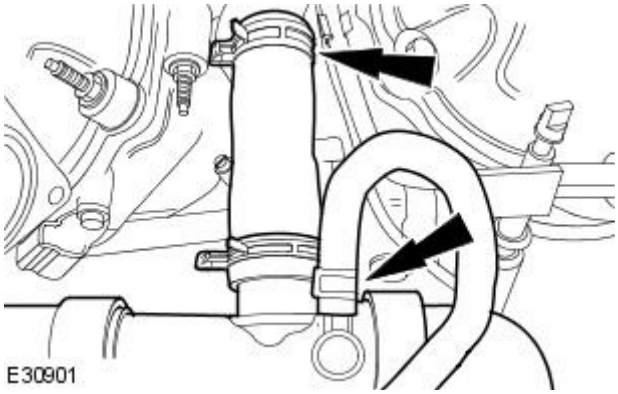


GETtheMANUALS.org

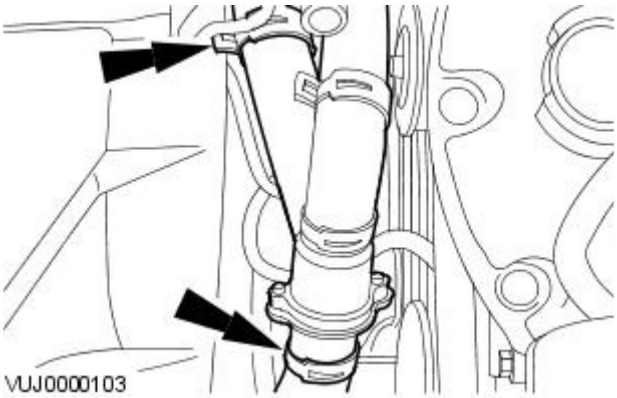


**23.** Install the hose assembly to the water pump and lower hose.

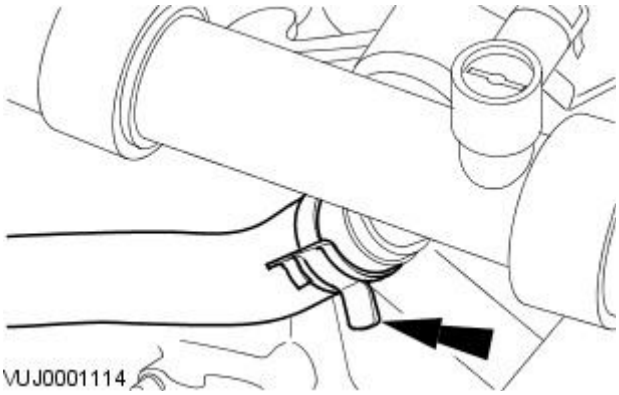


**24.** Install the coolant hose to the housing assembly.

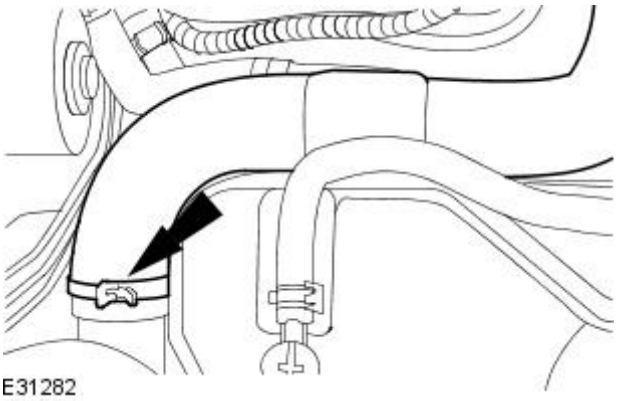


**25.** Connect the radiator top coolant hose.

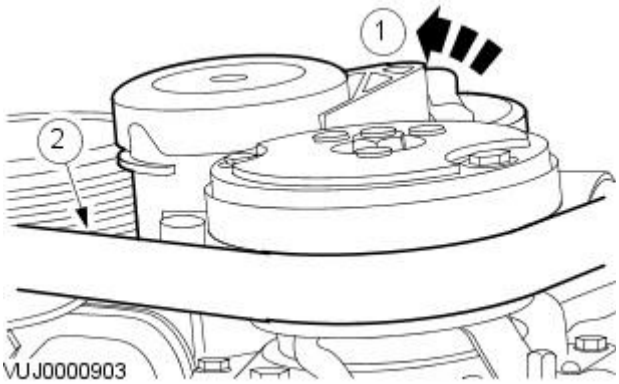


**26.** Raise vehicle.

**27.** Install the accessory drivebelt.

1. Rotate the belt tensioner counter-clockwise.
   1. Use a 3/8 inch square drive bar to rotate the belt tensioner.
2. Install the accessory drivebelt.

**28.** Install the oil pan.
For additional information, refer to Oil Pan in this section.

**29.** Lower the vehicle.

**30.** Install the left-hand valve cover.
For additional information, refer to Valve Cover LH in this section.

**31.** Install the right-hand valve cover.
For additional information, refer to Valve Cover RH in this section.

**32.** Carry out the cooling system feeling and bleeding procedure. For additional information, refer to Section 303-03A Engine Cooling / 303-03B Supercharger Cooling / 303-03C Engine Cooling.

**33.** Refill the engine with oil.

GETtheMANUALS.org

# Engine - 2.5L NA V6 - AJV6 / 3.0L NA V6 - AJ27 - Engine Mount LH

In-vehicle Repair

| Special Tool(s) | |
|---|---|
| 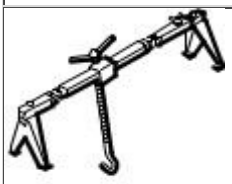 303-021 | Engine Support Beam<br><br>303-021 |
| 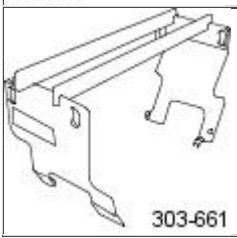 303-661 | Engine lifting Bracket<br><br>303-661 |

## Removal

1. Disconnect the battery ground cable.
   For additional information, refer to Section 414-01 Battery, Mounting and Cables.
2. Remove the cowl vent screen.
   For additional information, refer to Section 501-02 Front End Body Panels.
3. Remove the engine compartment support.

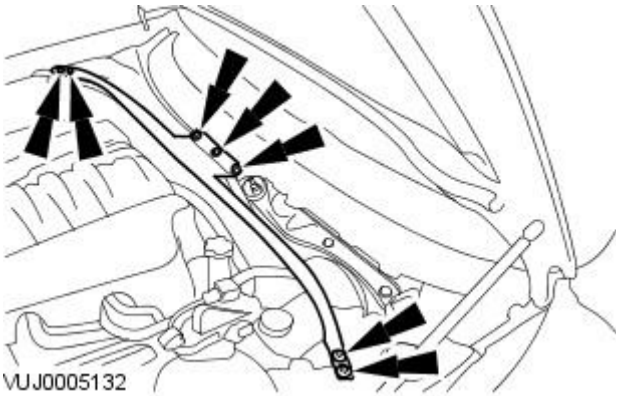


4. Detach the right-hand valve cover wiring harness.

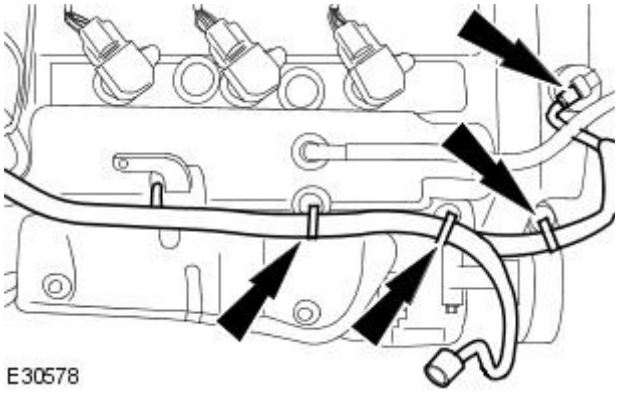


5. Disconnect the left-hand ignition coils electrical connectors.

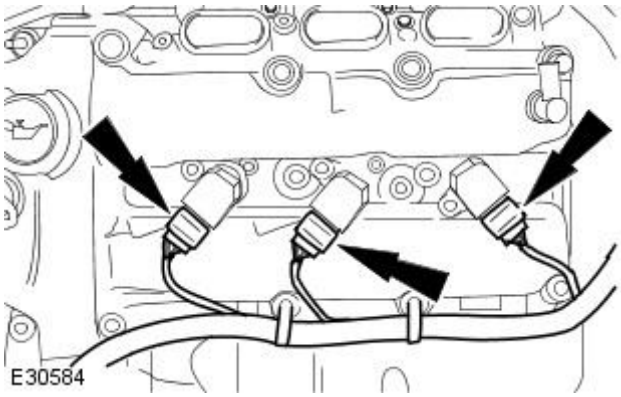


GETtheMANUALS.org

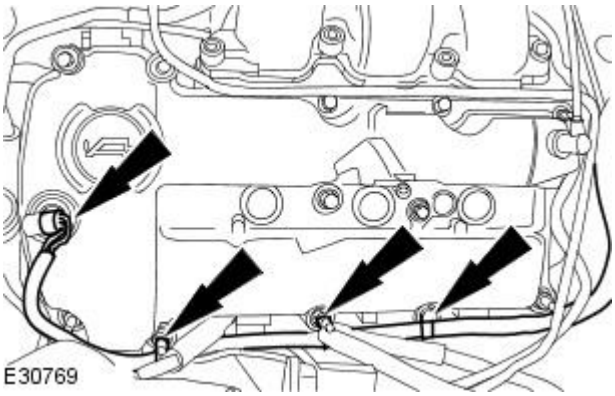


**6.** Detach the left-hand valve cover wiring harness.

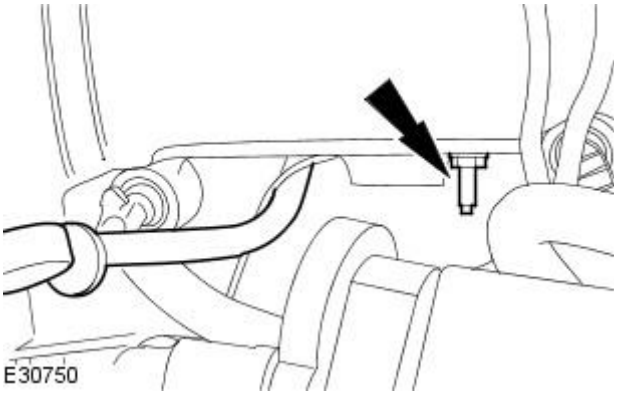


**7.** Remove the dipstick tube retaining bolt.

- Reposition the dipstick tube.

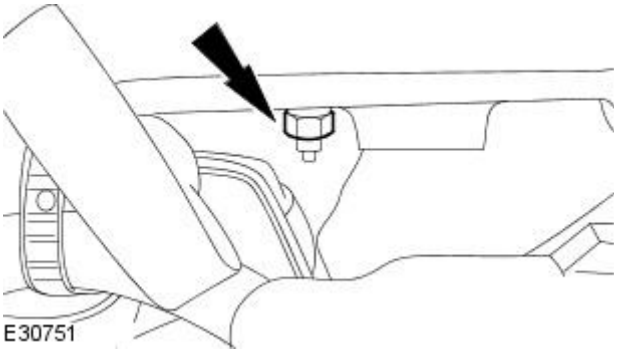


**8.** NOTE: Left-hand shown, right-hand similar.

Loosen the exhaust manifold retaining nut.

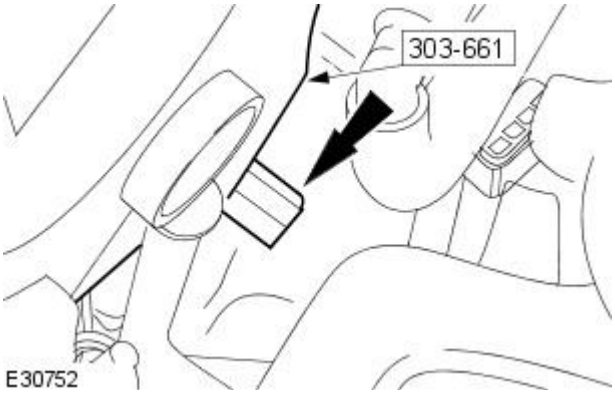


**9.** NOTE: Left-hand shown, right-hand similar.

Install the special tool to the exhaust manifold.

- Install the retaining bolt.

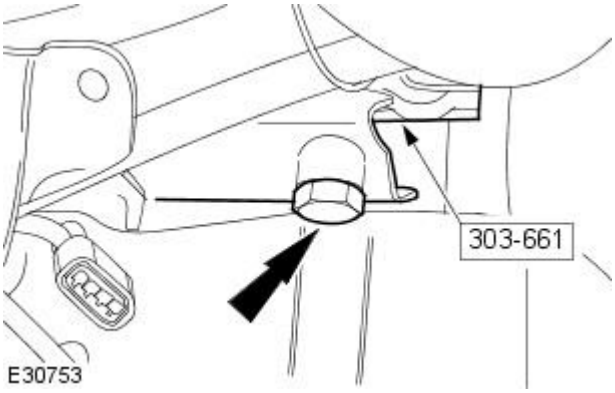


**10.** NOTE: Left-hand shown, right-hand similar.

Install the retaining bolt.

GETtheMANUALS.org

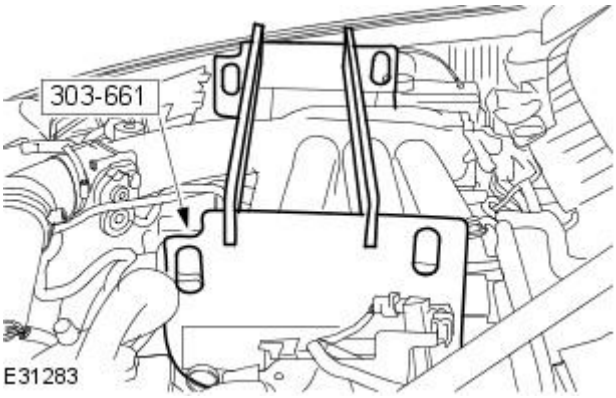


**11.** Install the special tool support bars to the special tool.

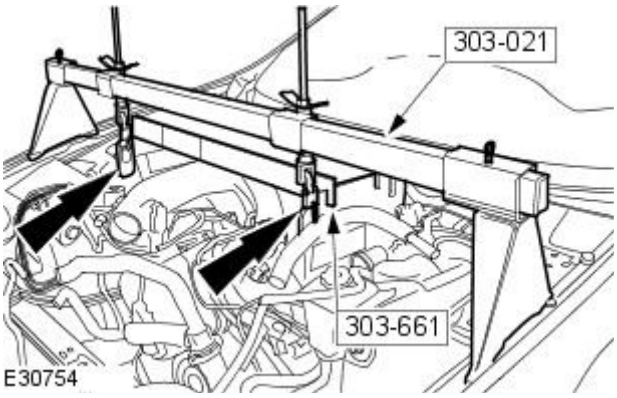


**12.** Install the special tool.

**13.** Remove the left-hand catalytic converter.
For additional information, refer to Section 309-00 Exhaust System.

**14.** Remove the steering gear shaft pinch bolt.

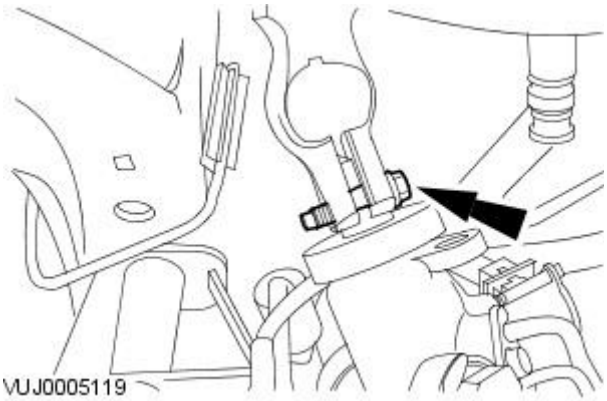


**15.** Detach the steering gear.

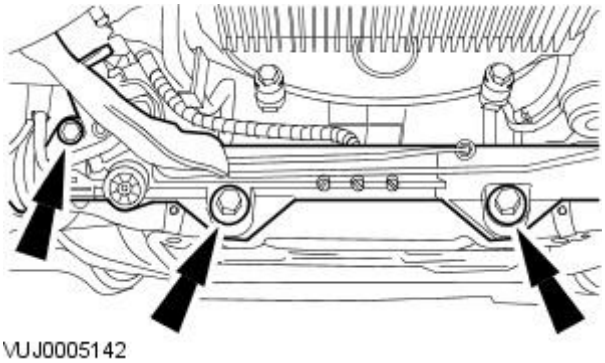


**16.** Secure the steering gear.

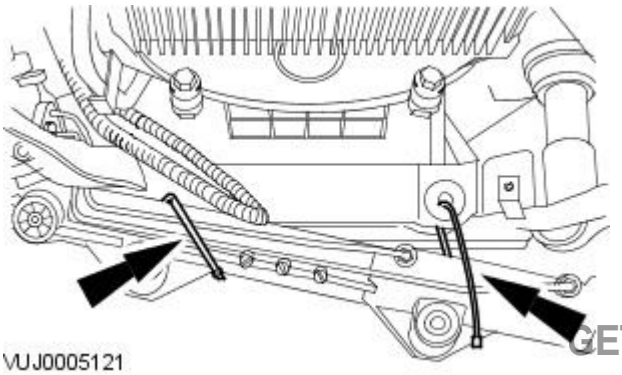


GETtheMANUALS.org

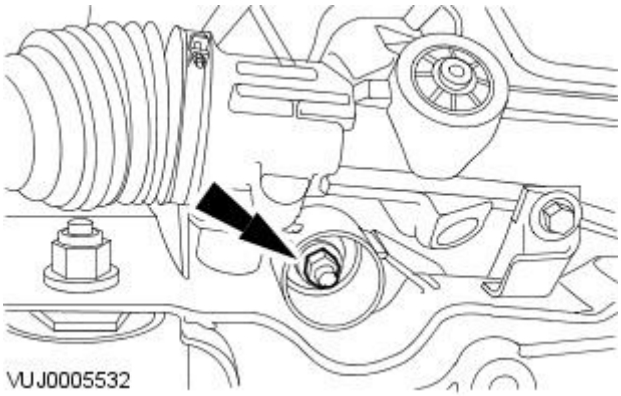


**17.** NOTE: Left-hand shown, right-hand similar.

Remove the engine mount retaining nut.

**18.** Lower the vehicle.

**19.** Using the special tools, raise the engine to a suitable height.

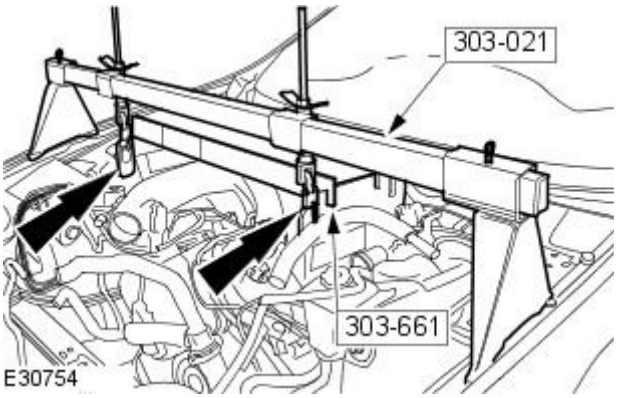


**20.** Raise the vehicle.

**21.** WARNING: Do not remove the front subframe retaining bolts. Failure to follow this procedure may result in personal injury.

Loosen the front subframe retaining bolts to enable the engine mount to be removed.

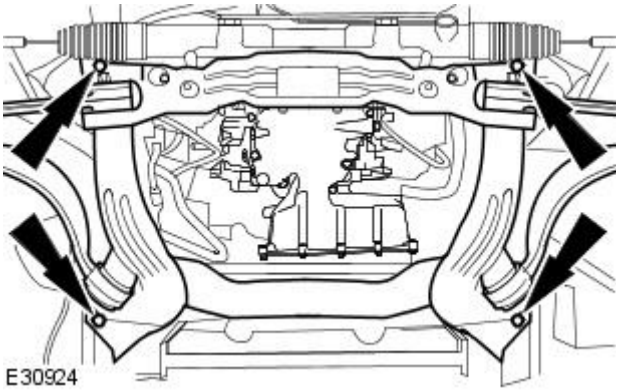


**22.** NOTE: Left-hand shown, right-hand similar.

Remove the engine mount.

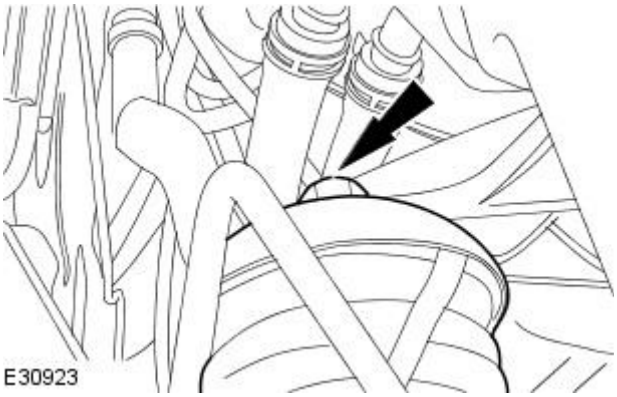


## Installation

GETtheMANUALS.org

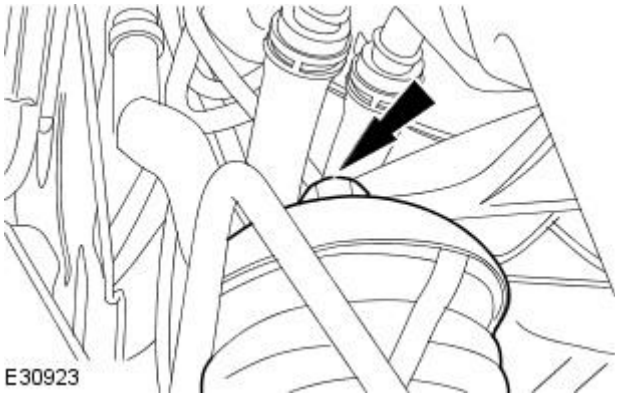


**1.** CAUTION: Make sure the engine mount locators are correctly aligned on installation. Failure to follow this procedure may result in damage to the vehicle.

• NOTE: Left-hand shown, right-hand similar.

Install the engine mount.

- Tighten to 55 Nm (+/- 15%).

**2.** Carry out the Underbody Misalignment Check.
For additional information, refer to Section 502-00 Uni-Body, Subframe and Mounting System.

**3.** Lower the vehicle.

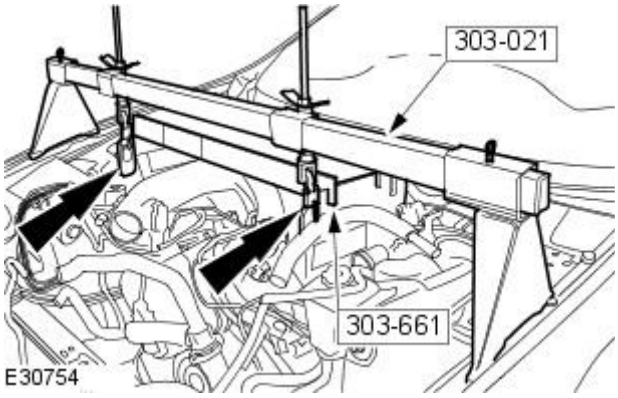


**4.** CAUTION: Make sure the engine mounts locate into the correct position when the engine is repositioned. Failure to follow this procedure may result in damage to the vehicle.

Using the special tools, lower the engine.

**5.** Raise the vehicle.

**6.** NOTE: Left-hand shown, right-hand similar.

Install the engine mounts retaining nut.

- Tighten to 63 Nm (+/- 15%).

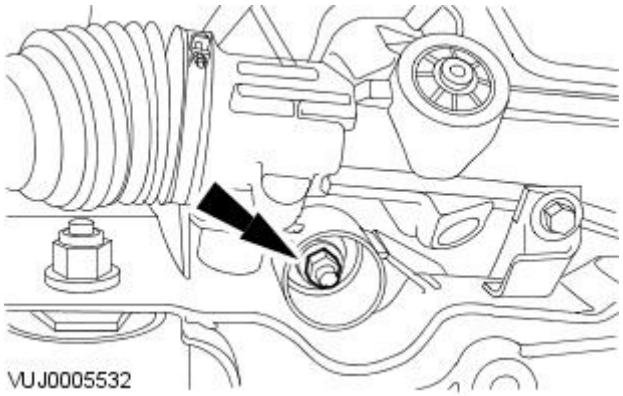


**7.** Detach the steering gear.

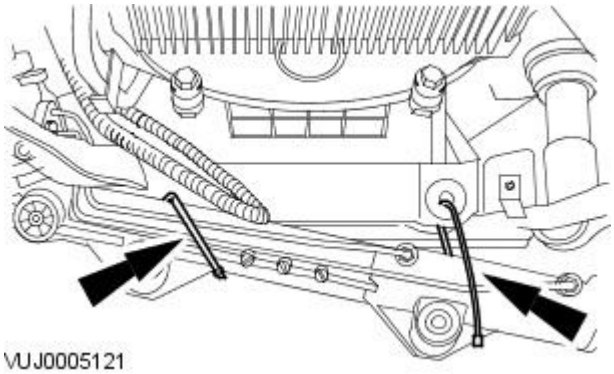


GETtheMANUALS.org

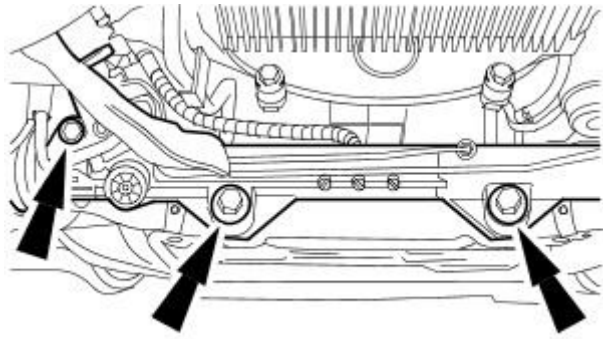


**8.** Attach the steering gear.

- Tighten to 100 Nm.

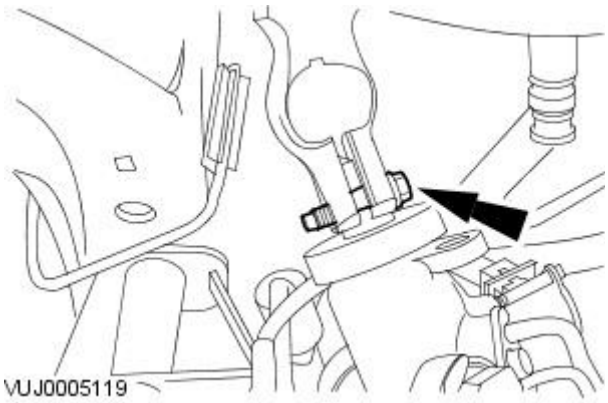


**9.** Install the steering gear shaft pinch bolt.

- Tighten to 35 Nm.

**10.** Install the left-hand catalytic converter.
For additional information, refer to Section 309-00 Exhaust System.

**11.** Lower the vehicle.

**12.** Remove the special tool.

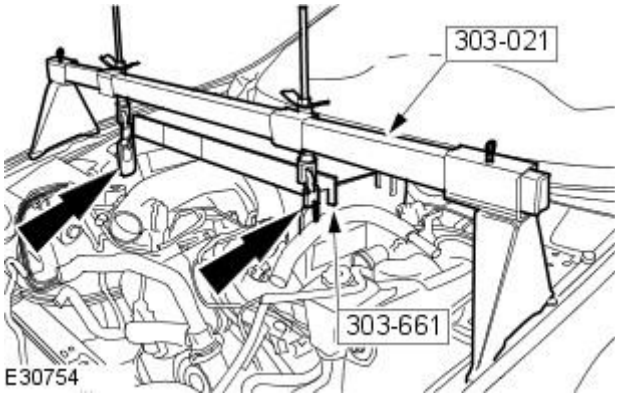


**13.** Remove the special tool support bars from the special tool.

GETtheMANUALS.org

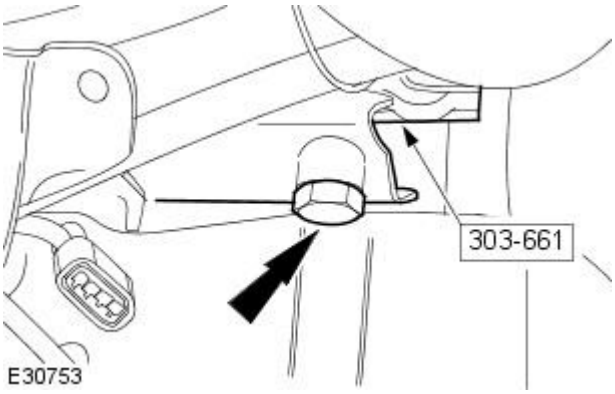


**14.** NOTE: Left-hand shown, right-hand similar.

Remove the retaining bolt.

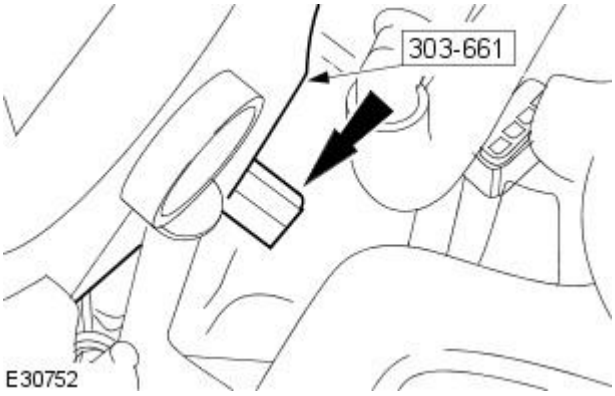


**15.** NOTE: Left-hand shown, right-hand similar.

Remove the retaining bolt.

- Remove the special tool from the exhaust manifold.

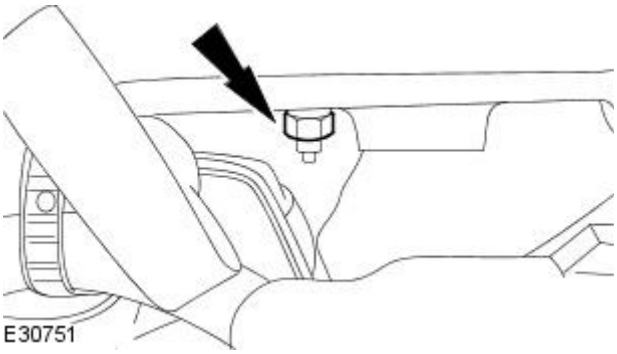


**16.** NOTE: Left-hand shown, right-hand similar.

Install the exhaust manifold retaining nut.

- Tighten to 25 Nm.

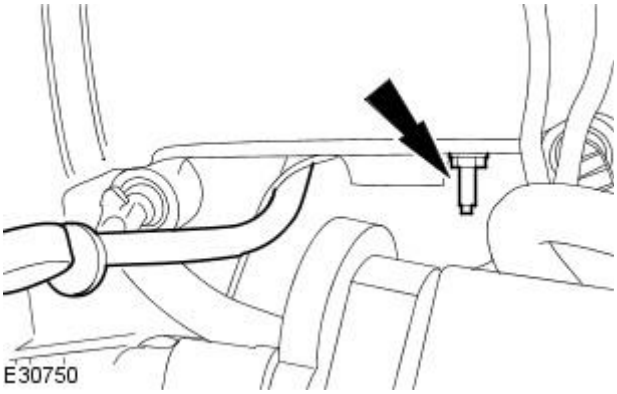


**17.** Install the dipstick tube retaining bolt.

- Tighten to 10 Nm.

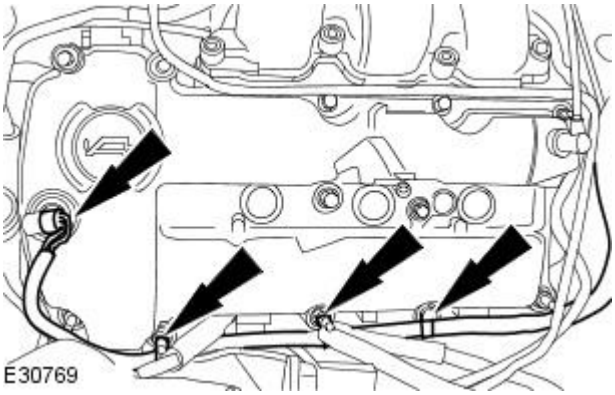


**18.** Attach the left-hand valve cover wiring harness.

GETtheMANUALS.org

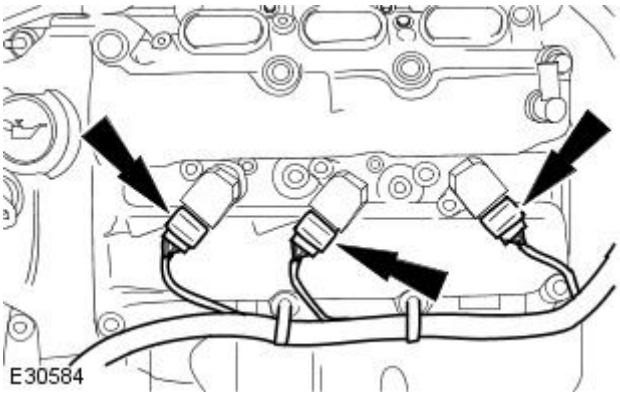


**19.** Connect the left-hand ignition coils electrical connectors.

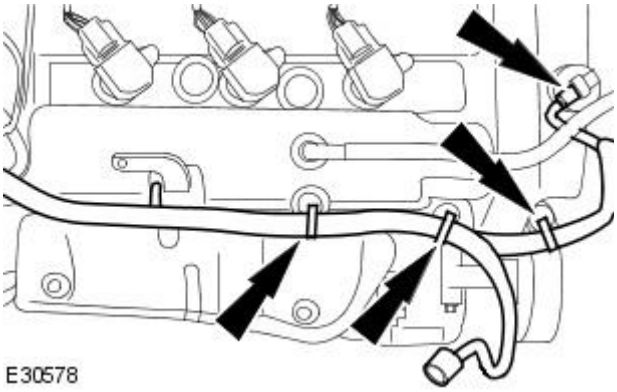


**20.** Attach the right-hand valve cover wiring harness.

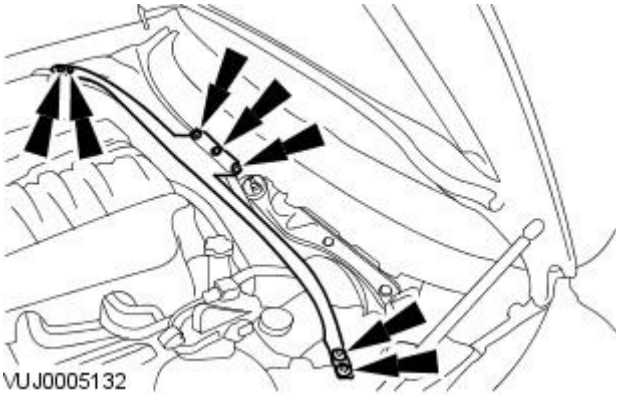


**21.** Install the engine compartment support.

- Tighten to 25 Nm.

**22.** Install the cowl vent screen.
For additional information, refer to Section 501-02 Front End Body Panels.

**23.** Connect the battery ground cable.
For additional information, refer to Section 414-01 Battery, Mounting and Cables.

GETtheMANUALS.org

# Engine - 2.5L NA V6 - AJV6 / 3.0L NA V6 - AJ27 - Exhaust Manifold LHVIN Range: M45255->N52047

In-vehicle Repair

## Removal

1. Remove the left-hand catalytic converter.
   For additional information, refer to: Catalytic Converter - V8 4.2L Petrol/V8 S/C 4.2L Petrol/2.5L NA V6 - AJV6/3.0L NA V6 - AJ27 (309-00 Exhaust System, Removal and Installation).
2. Lower the vehicle.
3. Detach the left-hand valve cover wiring harness.

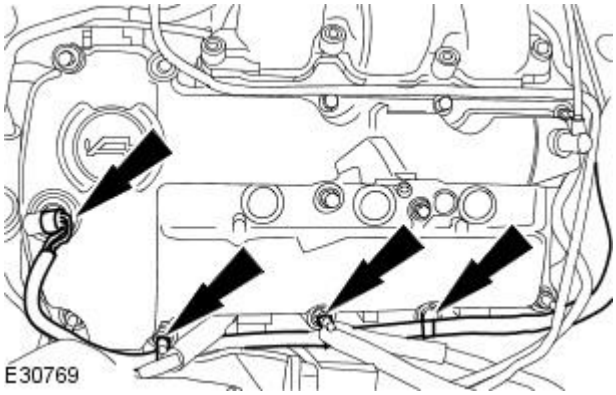


4. Remove the dipstick tube retaining bolt.
   - Reposition the dipstick tube.

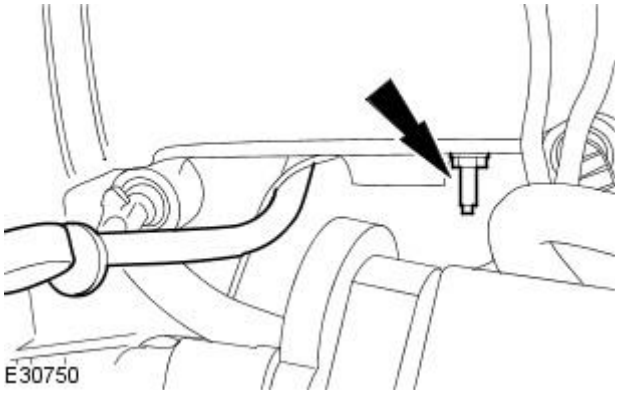


5. Remove the left-hand exhaust manifold heat shield.

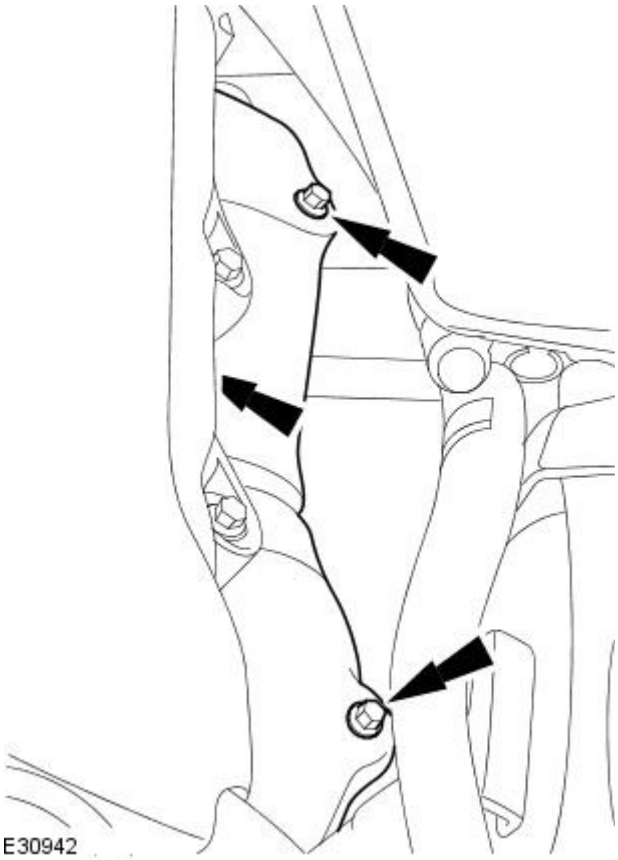


6. Raise the vehicle.

GETtheMANUALS.org

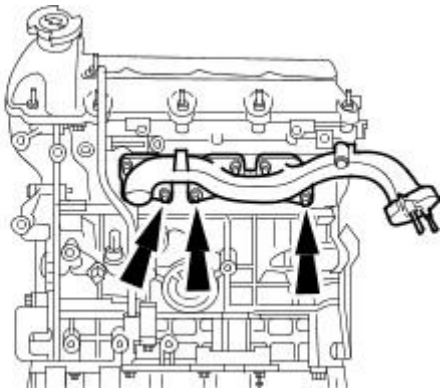

E30944

**7.** NOTE: Engine shown removed for clarity.

• NOTE: When an exhaust manifold retaining stud is removed, it must be replaced with a new retaining stud and nut.

Remove the left-hand exhaust manifold lower retaining nuts.

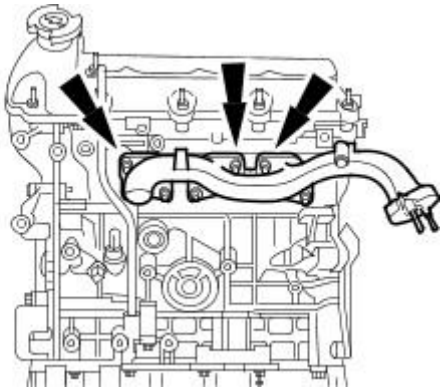

E30943

**8.** Lower the vehicle.

**9.** NOTE: Engine shown removed for clarity.

• NOTE: When an exhaust manifold retaining stud is removed, it must be replaced with a new retaining stud and nut.

Remove the left-hand exhaust manifold.

- Remove and discard the left-hand exhaust gasket.

## Installation

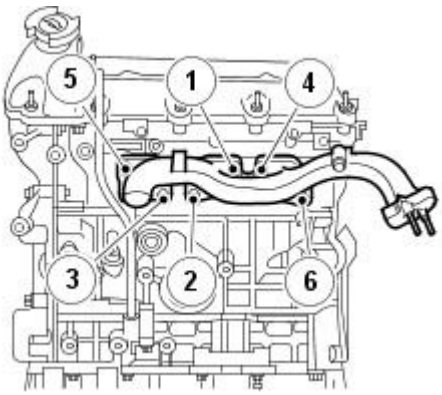


E64028

**1.** NOTE: Engine shown removed for clarity.

• NOTE: When a new exhaust manifold retaining stud is installed, tighten to 9 Nm.

• NOTE: Tighten the exhaust manifold retaining nuts in the sequence shown.

To install, reverse the removal procedure.

- Install a new left-hand exhaust manifold gasket.
- Tighten to 20 Nm.

GETtheMANUALS.org

**2.** Tighten to 10 Nm.

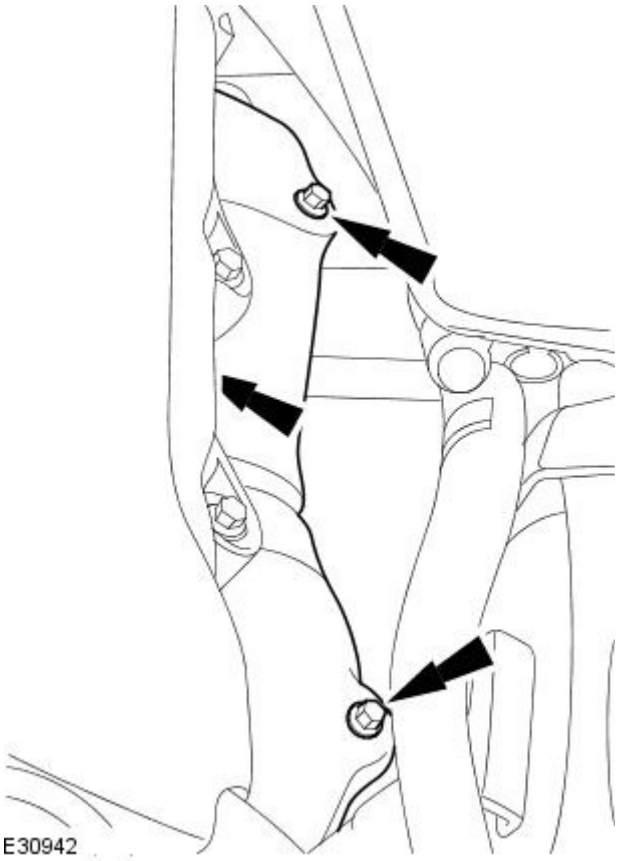


**3.** Tighten to 10 Nm.

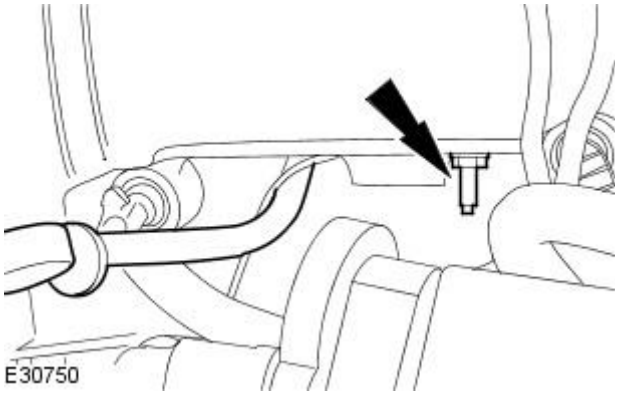


GETtheMANUALS.org

# Engine - 2.5L NA V6 - AJV6 / 3.0L NA V6 - AJ27 - Exhaust Manifold LHVIN Range: N52048->N99999

In-vehicle Repair

## Removal

All vehicles

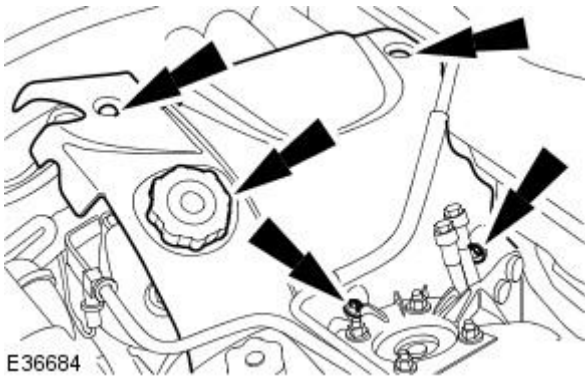


1. Remove the engine cover.

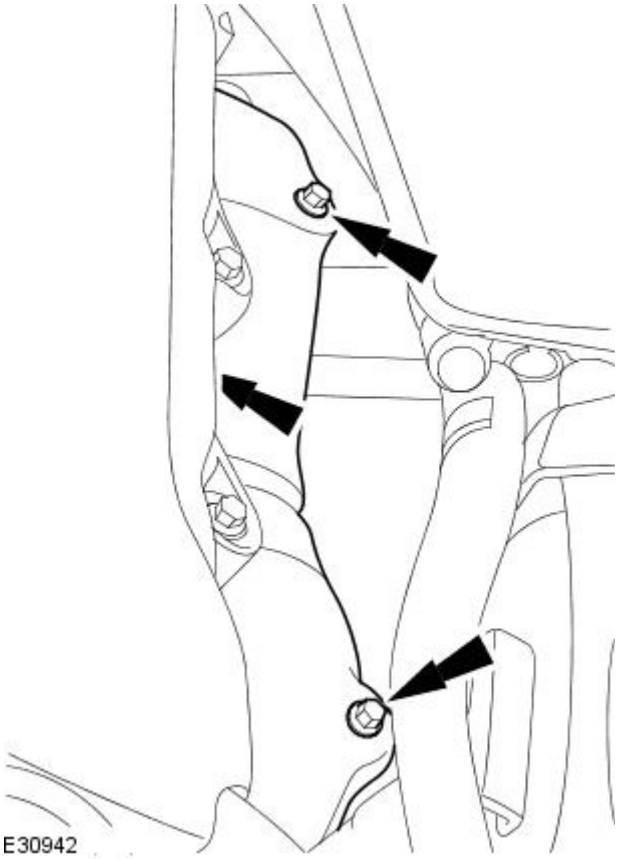


2. Remove the left-hand exhaust manifold heat shield.

Vehicles with secondary air injection (AIR)

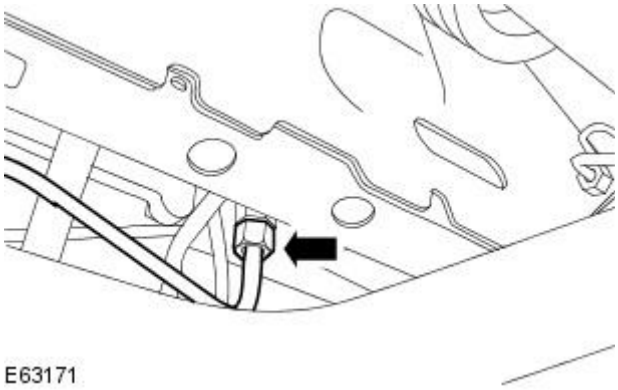


3. Disconnect the secondary air injection (AIR) control valve to exhaust manifold tube.

All vehicles

GETtheMANUALS.org

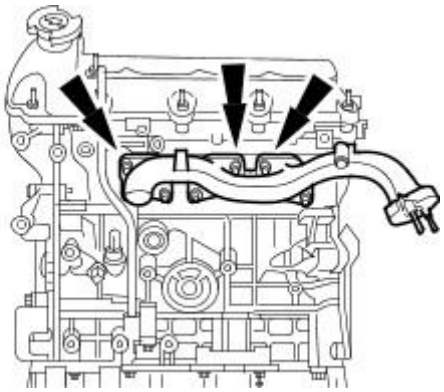

E30943

**4.** NOTE: Engine shown removed for clarity.

• NOTE: When an exhaust manifold retaining stud is removed, it must be replaced with a new retaining stud and nut.

Remove the left-hand exhaust manifold upper retaining nuts.

**5.** Remove the left-hand catalytic converter.
For additional information, refer to: Catalytic Converter - V8 4.2L Petrol/V8 S/C 4.2L Petrol/2.5L NA V6 - AJV6/3.0L NA V6 - AJ27 (309-00 Exhaust System, Removal and Installation).

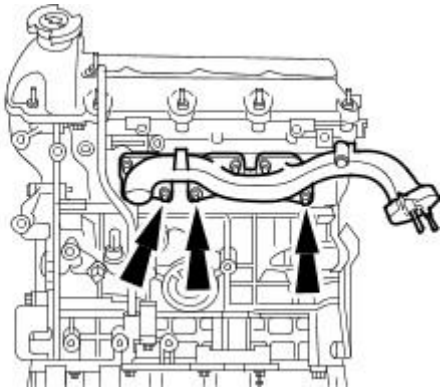

E30944

**6.** NOTE: Engine shown removed for clarity.

• NOTE: When an exhaust manifold retaining stud is removed, it must be replaced with a new retaining stud and nut.

Remove the left-hand exhaust manifold.

- Remove and discard the left-hand exhaust manifold gasket.

## Installation

All vehicles

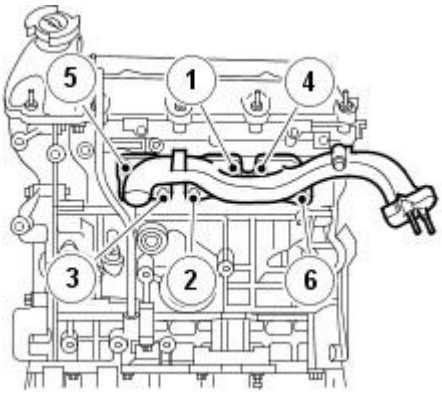


E64028

**1.** NOTE: Engine shown removed for clarity.

• NOTE: When a new exhaust manifold retaining stud is installed, tighten to 9 Nm.

• NOTE: Tighten the exhaust manifold retaining nuts in the sequence shown.

To install, reverse the removal procedure.

- Install a new left-hand exhaust manifold gasket.
- Tighten to 20 Nm.

Vehicles with secondary air injection (AIR)

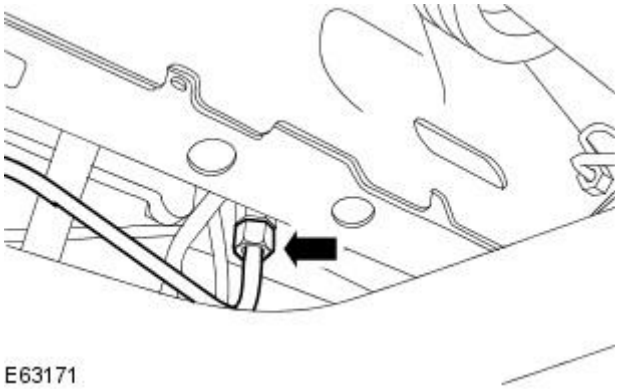

E63171

**2.** Tighten to 35 Nm.

All vehicles

GETtheMANUALS.org

**3.** Tighten to 10 Nm.

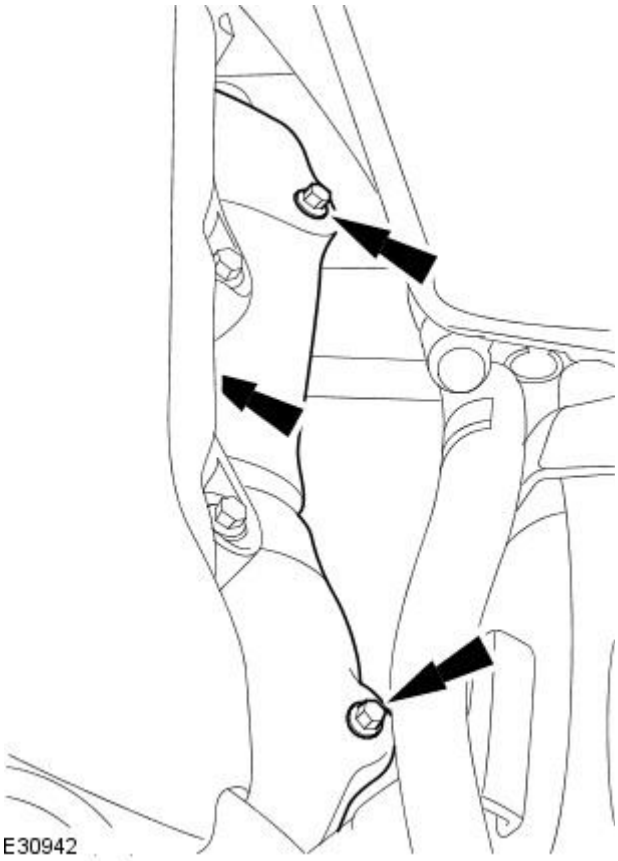


GETtheMANUALS.org

# Engine - 2.5L NA V6 - AJV6 / 3.0L NA V6 - AJ27 - Flexplate

In-vehicle Repair

## Removal

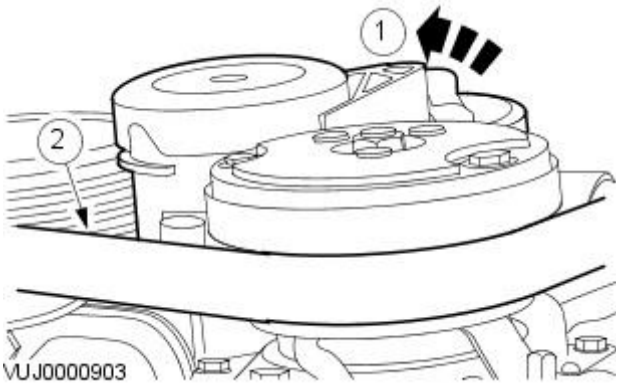


**1.** Remove the automatic transmission.
For additional information, refer to Section 307-01 Automatic Transmission/Transaxle.

**2.** Detach the accessory drivebelt.

1. Rotate the belt tensioner counter-clockwise.
   1. Use a 3/8 inch square drive bar to rotate the belt tensioner.
2. Detach the accessory drivebelt.

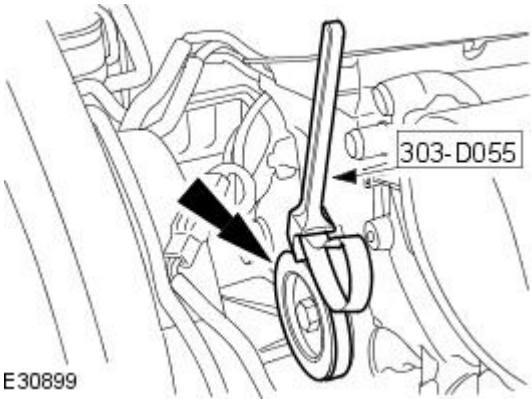


**3.** Install the special tool.

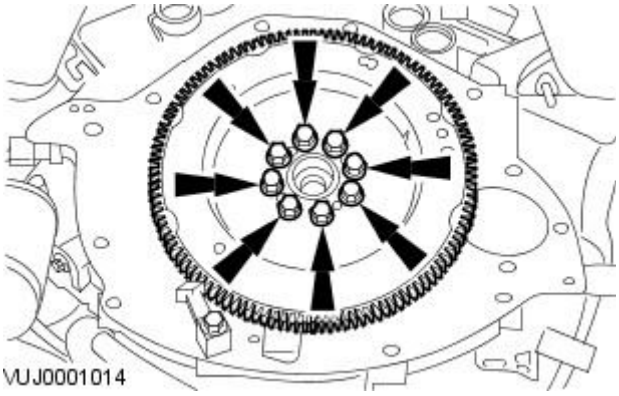


**4.** NOTE: Prevent the flexplate from rotating.

Remove the flexplate.

## Installation

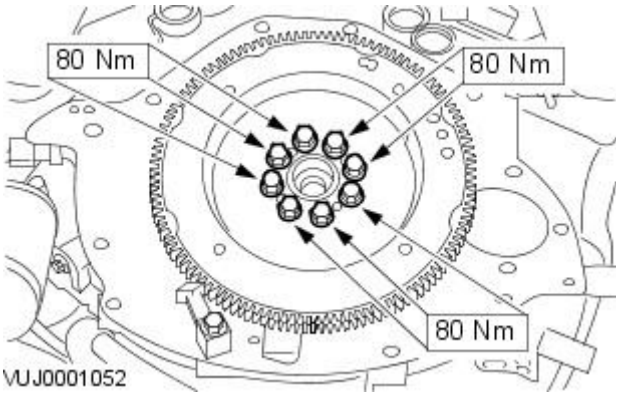


**1.** NOTE: Make sure the crankshaft and flexplate mating faces are clean before installation.

- NOTE: The flexplate will only locate in one position.
- NOTE: Tighten the retaining bolts working diagonally.

Install the flexplate.

- Prevent the flexplate from rotating.

GETtheMANUALS.org

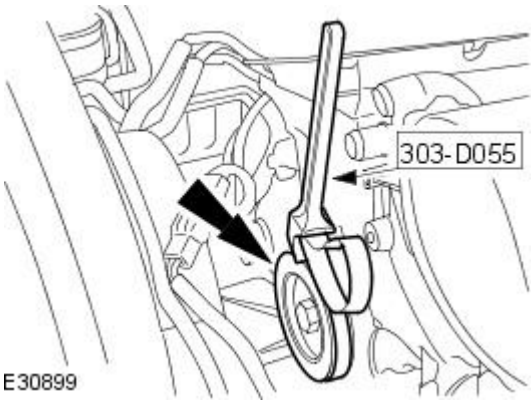


**2.** Remove the special tool.

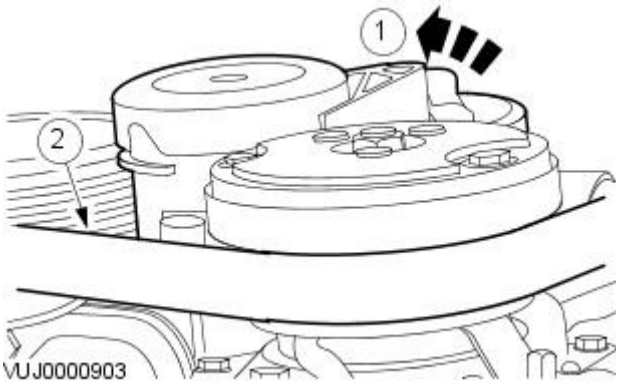


**3.** Attach the accessory drivebelt.

1. Rotate the belt tensioner counter-clockwise.
    1. Use a 3/8 inch square drive bar to rotate the belt tensioner.
2. Attach the accessory drivebelt.

**4.** Install the automatic transmission.
For additional information, refer to Section 307-01 Automatic Transmission/Transaxle.

GETtheMANUALS.org

# Engine - 2.5L NA V6 - AJV6 / 3.0L NA V6 - AJ27 - Flywheel

In-vehicle Repair

## Removal

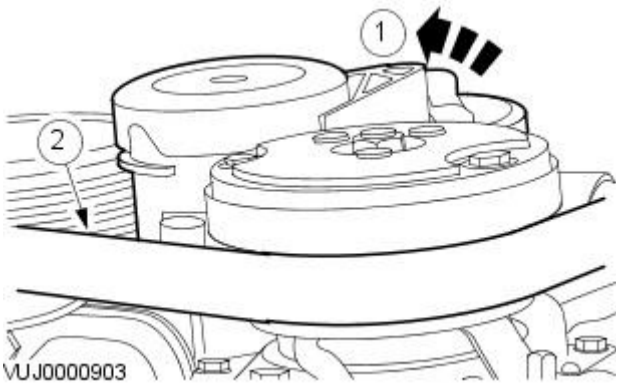


**1.** Remove the clutch disc and pressure plate.
For additional information, refer to Section 308-01 Clutch.

**2.** Detach the accessory drivebelt.

1. Rotate the belt tensioner counter-clockwise.
   1. Use a 3/8 inch square drive bar to rotate the belt tensioner.
2. Detach the accessory drivebelt.

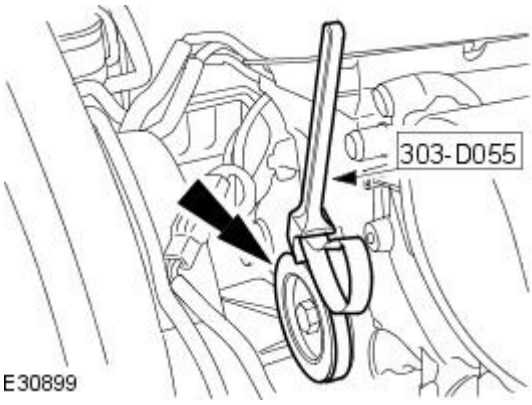


**3.** Install the special tool.

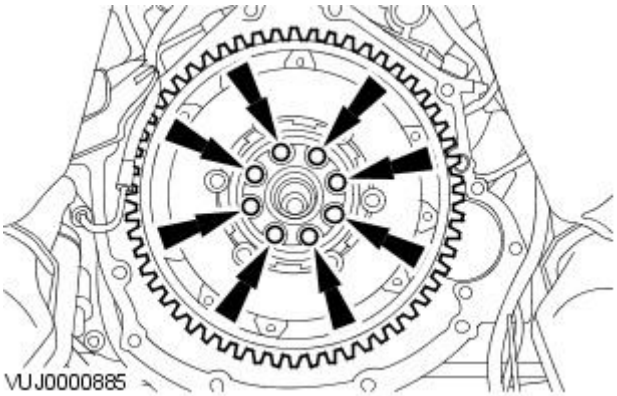


**4.** NOTE: Prevent the flywheel from rotating.

Remove the flywheel.

## Installation

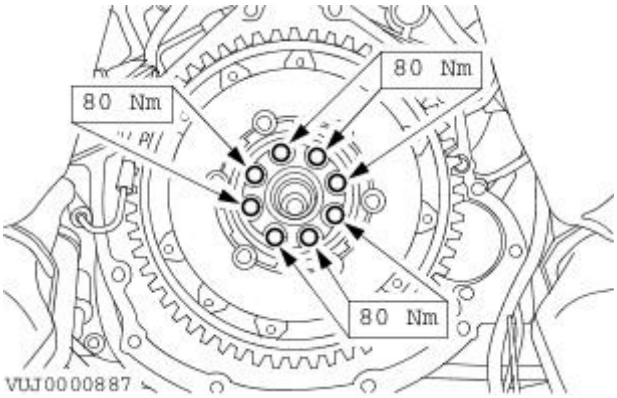


**1.** NOTE: Make sure the crankshaft and flywheel mating faces are clean before installation.

- NOTE: The flywheel will only locate in one position.
- NOTE: Tighten the retaining bolts working diagonally.

Install the flywheel.

- Prevent the flywheel from rotating.

GETtheMANUALS.org

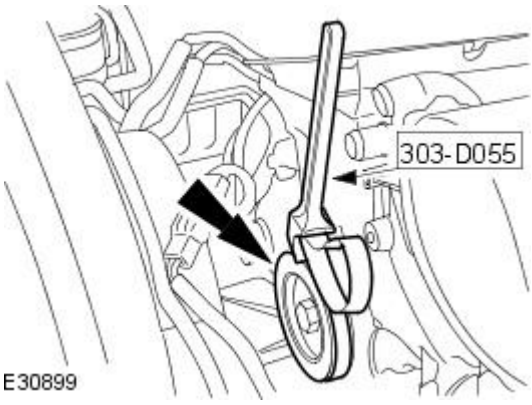


**2.** Remove the special tool.

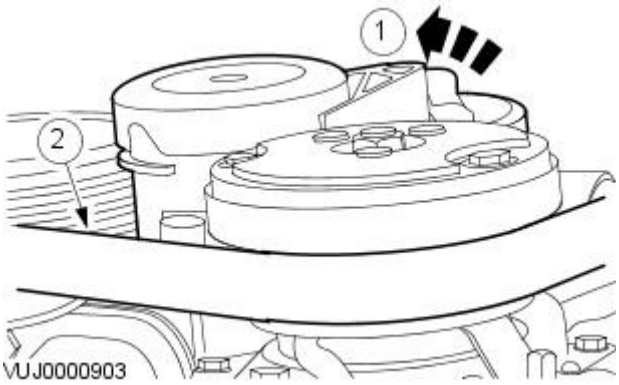


**3.** Attach the accessory drivebelt.

1. Rotate the belt tensioner counter-clockwise.
    1. Use a 3/8 inch square drive bar to rotate the belt tensioner.
2. Attach the accessory drivebelt.

**4.** Install the clutch disc and pressure plate.
For additional information, refer to Section 308-01 Clutch.

GETtheMANUALS.org

# Engine - 2.5L NA V6 - AJV6 / 3.0L NA V6 - AJ27 - Intake Manifold

In-vehicle Repair

## Removal

**1.** WARNINGS:

Never remove the coolant expansion tank pressure cap under any circumstances while the engine is operating. Failure to follow this instruction may result in personal injury.

To avoid hot coolant or steam blowing out of the cooling system, use extreme care when removing the coolant expansion tank pressure cap. Wait until the engine has cooled down, then insulate the coolant pressure cap with a suitable cloth and slowly loosen the coolant expansion tank pressure cap until the cooling system pressure is released. Do not remove the coolant expansion tank pressure cap. Step back while the pressure is released from the system. When all of the pressure has been released slowly remove the coolant expansion tank pressure cap (still with the suitable cloth in position) from the coolant expansion tank. Failure to follow this instruction may result in personal injury.

Release the cooling system pressure.

- Remove the coolant expansion tank pressure cap.

**2.** Remove the air cleaner outlet pipe.
For additional information, refer to: Air Cleaner Outlet Pipe - VIN Range: N52048->N99999 (303-12A Intake Air Distribution and Filtering - 2.5L NA V6 - AJV6/3.0L NA V6 - AJ27, Removal and Installation).

**3.** Remove the engine cover.

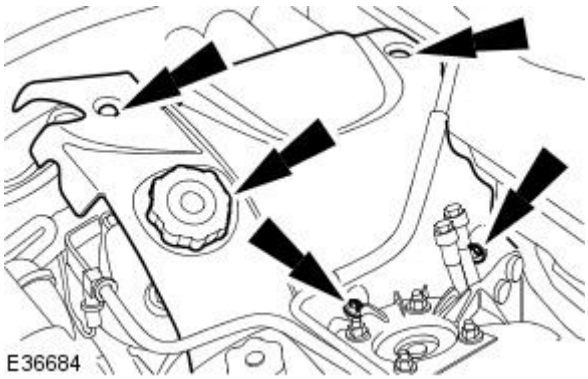


**4.** Disconnect the throttle motor electrical connector.

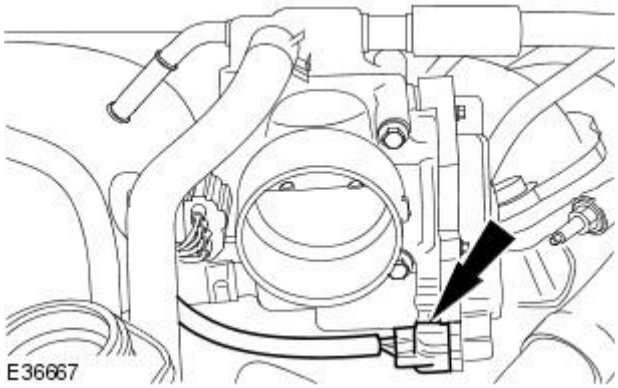


**5.** Disconnect the throttle position sensor (TPS) electrical connector.

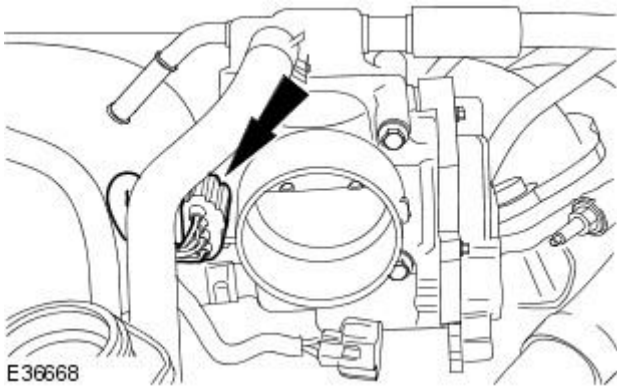


GETtheMANUALS.org

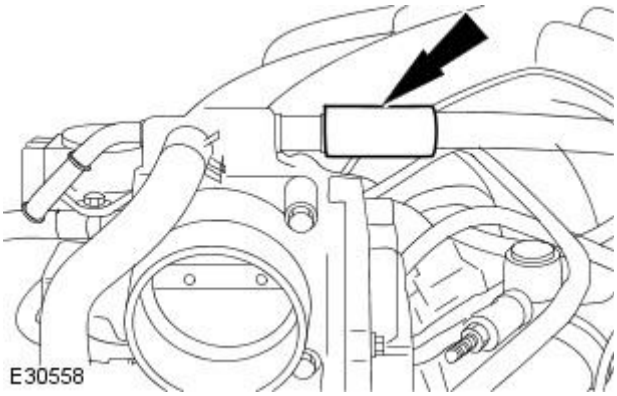


**6.** Disconnect the positive crankcase ventilation (PCV) hose.

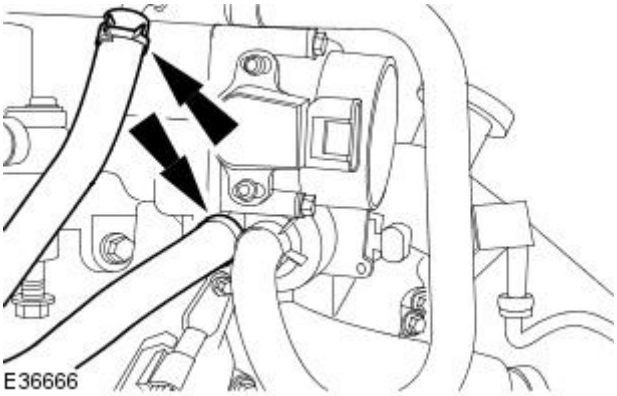


**7.** NOTE: Cap the coolant hoses to minimize coolant loss.

Detach the coolant hoses from the throttle body.

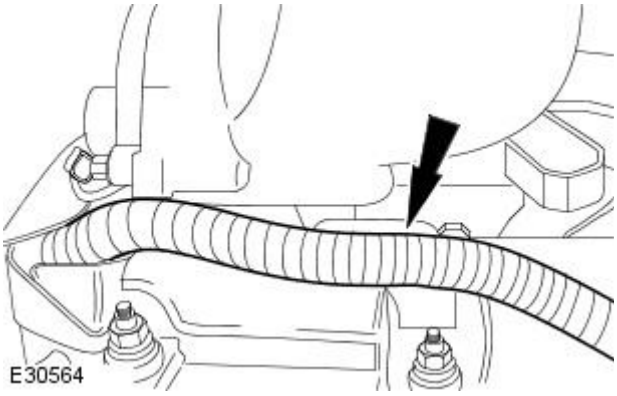


**8.** Detach the engine wiring harness from the intake manifold side retaining bracket.

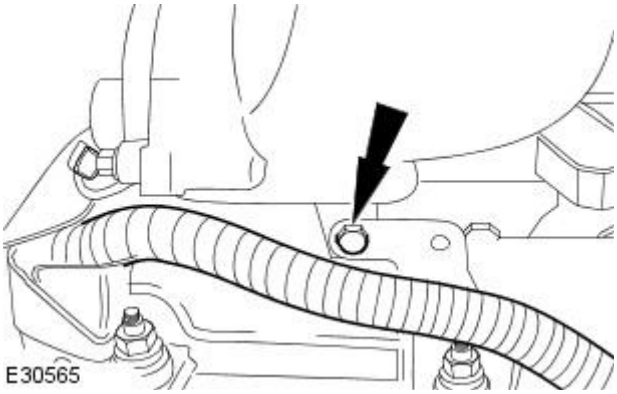


**9.** Detach the intake manifold right-hand side retaining bracket.

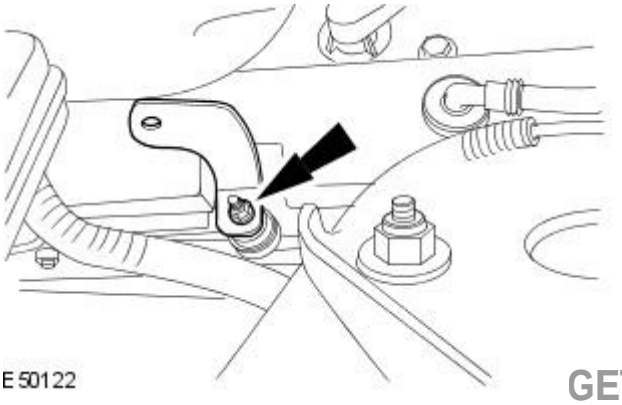


**10.** Loosen the intake manifold right-hand side retaining bracket.

GETtheMANUALS.org

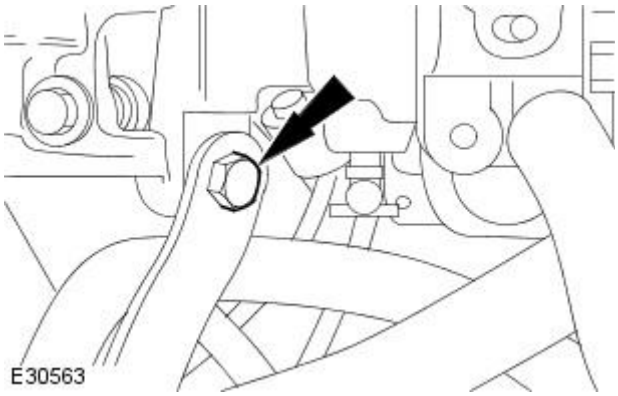


**11.** Detach the intake manifold front retaining bracket.

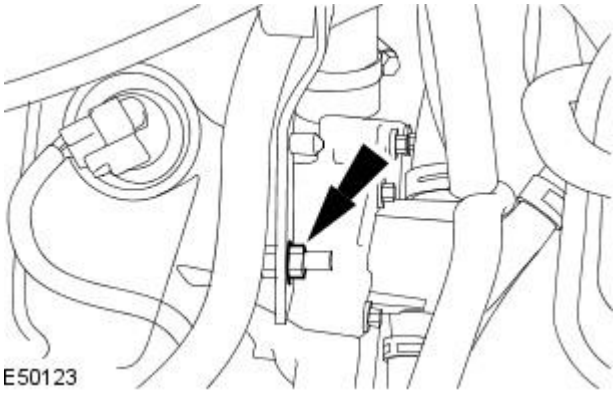


**12.** Loosen the intake manifold front retaining bracket.

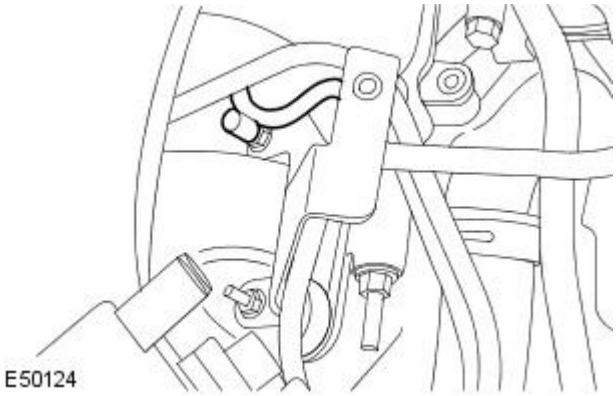


**13.** Detach the coolant temperature sensor wiring harness.

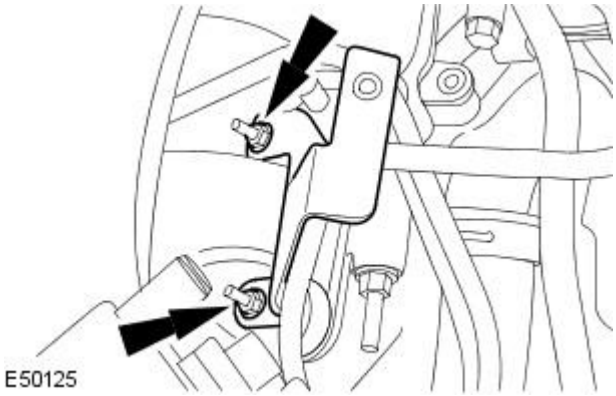


**14.** Remove the engine cover front retaining bracket.

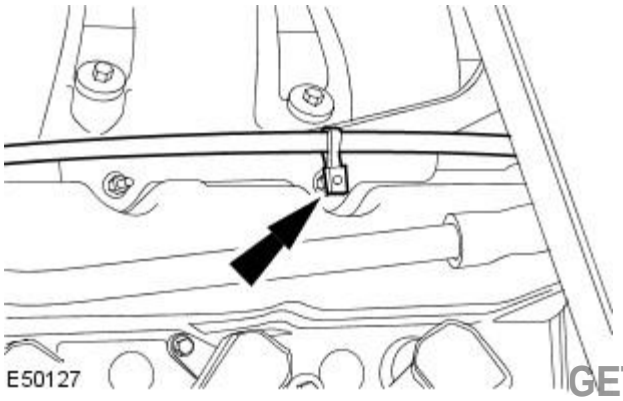


**15.** Detach the evaporative emission canister purge valve transfer pipe.

GETtheMANUALS.org

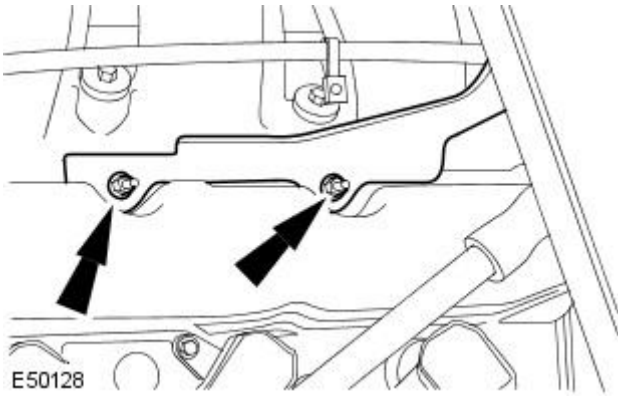


**16.** Remove the engine cover left-hand side retaining bracket.

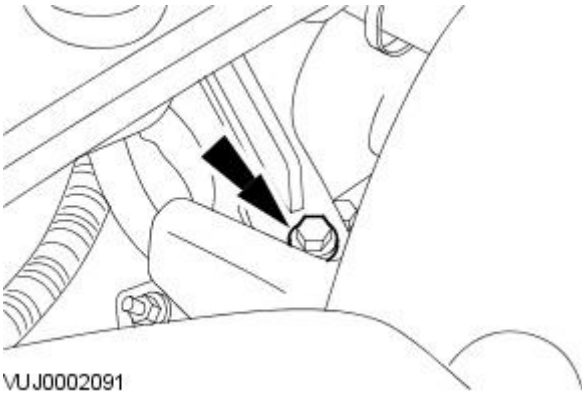


**17.** Remove the fuel pressure sensor bracket retaining bolt.

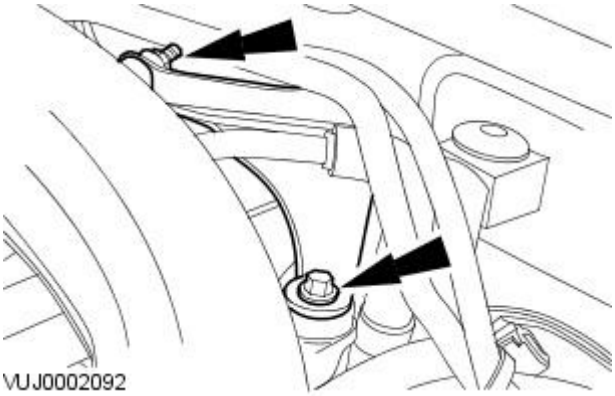


**18.** Detach the fuel pressure sensor bracket.

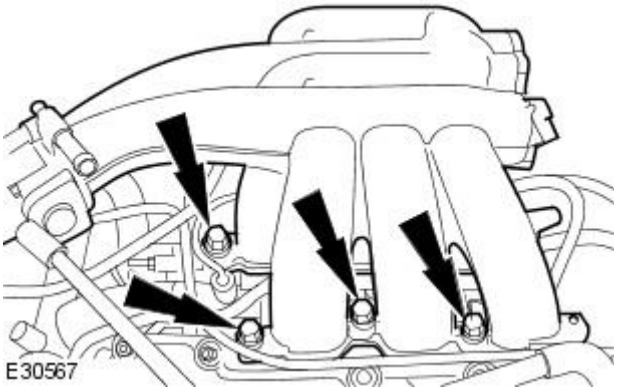


**19.** Detach the intake manifold.

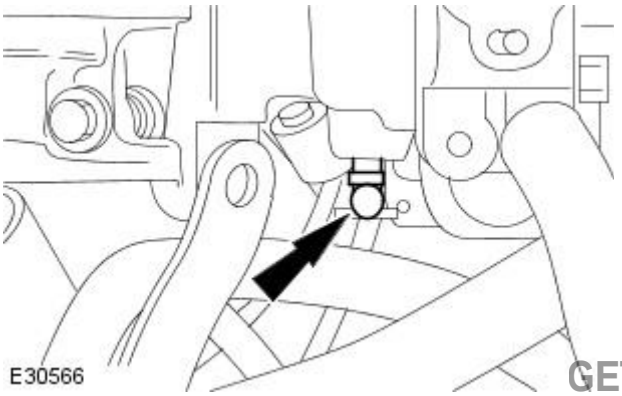


**20.** NOTE: The evaporative emission canister purge valve transfer pipe is attached to the induction manifold by a quick release coupling.

Disconnect the evaporative emission canister purge valve transfer pipe.

GETtheMANUALS.org

**21.** Disconnect the manifold absolute pressure (MAP) sensor electrical connector.

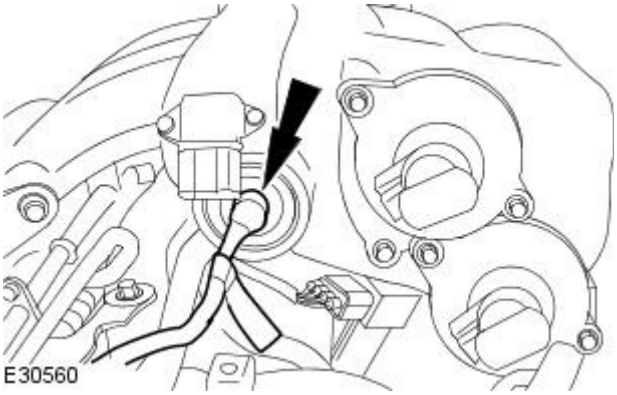


**22.** Disconnect the fuel pressure sensor vacuum hose.

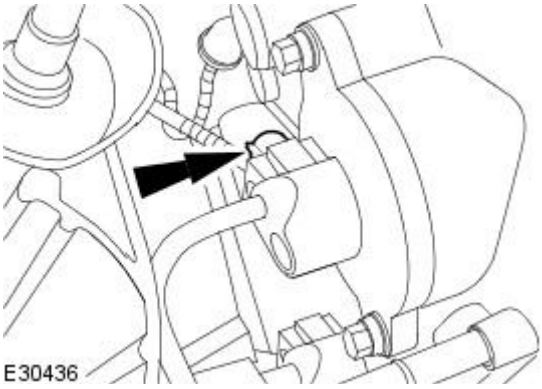


**23.** NOTE: Left-hand intake manifold tuning (IMT) valve shown, right-hand (IMT) valve similar.

Disconnect the IMT valves electrical connectors.

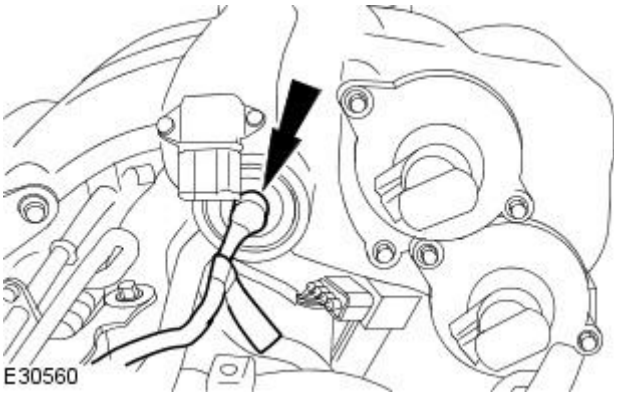


**24.** Disconnect the fuel pressure regulator vacuum hose.

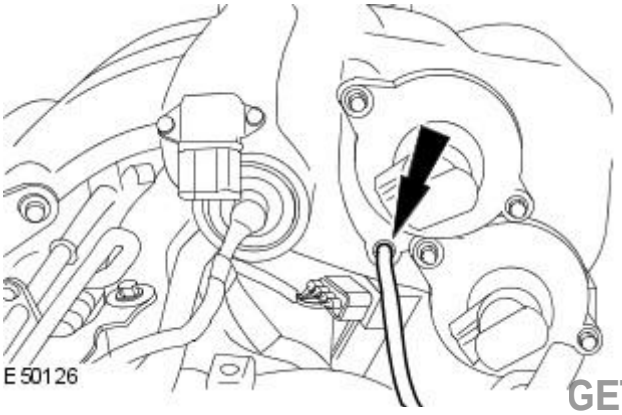


**25.** Disconnect the brake booster vacuum hose.

GETtheMANUALS.org

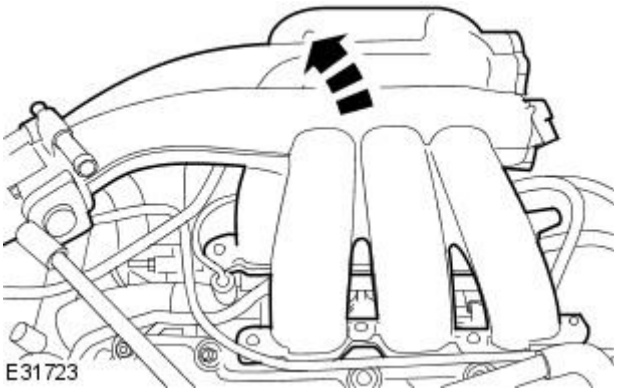


**26.** Remove the intake manifold.

## Installation

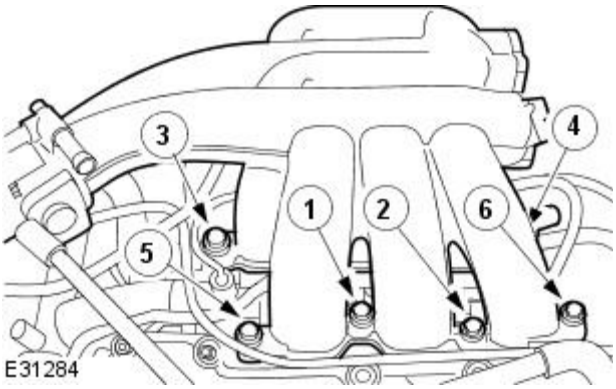


**1.** NOTE: Install new intake manifold gaskets.

• NOTE: The intake manifold retaining bolts in position 1, 4 and 5 are longer than the retaining bolts in position 2, 3 and 6.

• NOTE: Do not fully tighten the retaining bolts.

Install the intake manifold.

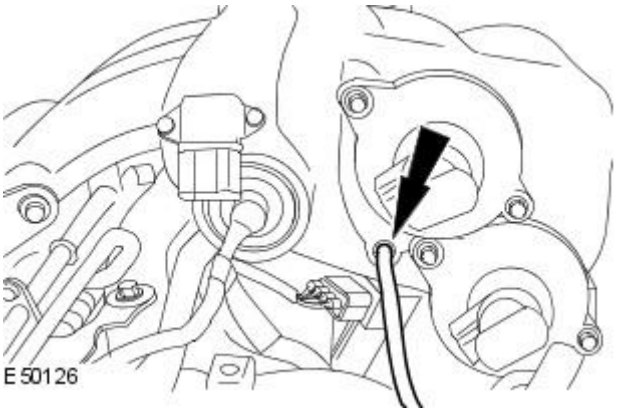


**2.** Connect the brake booster vacuum hose.

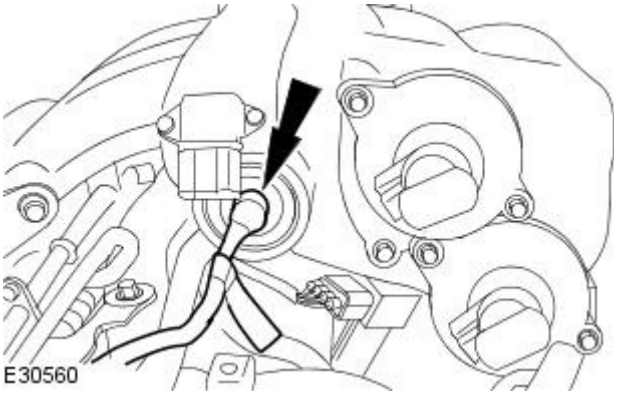


**3.** Connect the fuel pressure regulator vacuum hose.

GETtheMANUALS.org

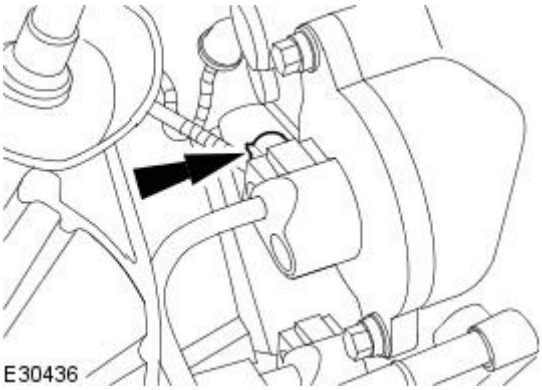


**4.** NOTE: Left-hand intake manifold tuning (IMT) valve shown, right-hand (IMT) valve similar.

Connect the IMT valves electrical connectors.

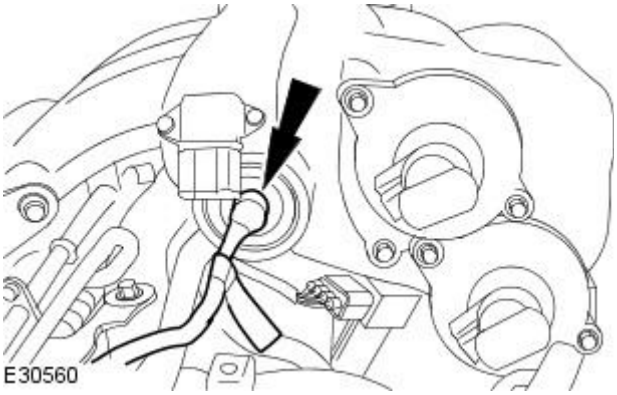


**5.** Connect the fuel pressure sensor vacuum hose

**6.** Connect the manifold absolute pressure (MAP) sensor electrical connector.

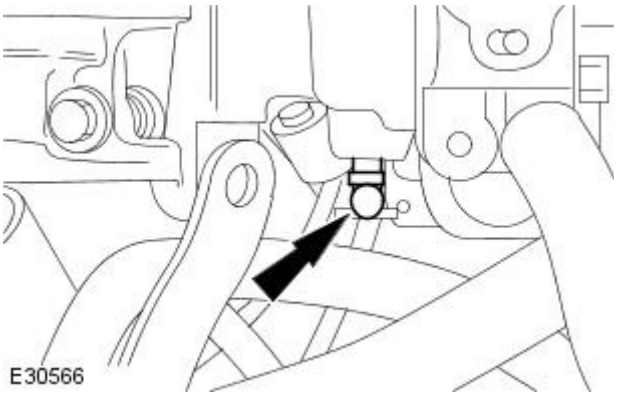


**7.** NOTE: The evaporative emission canister purge valve transfer pipe is attached to the induction manifold by a quick release coupling.

Connect the evaporative emission canister purge valve transfer pipe.

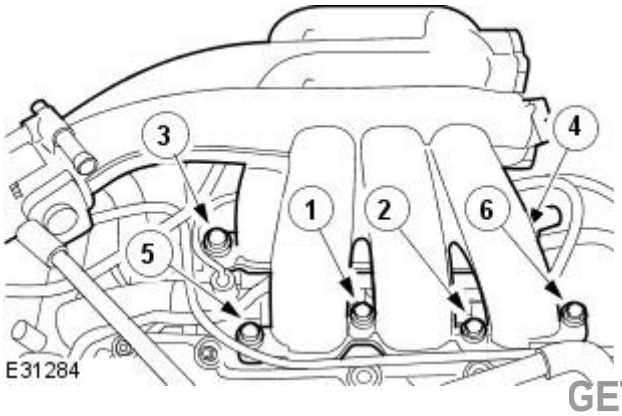


**8.** NOTE: The intake manifold retaining bolts in position 1, 4 and 5 are longer than the retaining bolts in position 2, 3 and 6.

Reposition the intake manifold.

- Tighten to 10 Nm.
- Complete the tightening sequence.

GETtheMANUALS.org

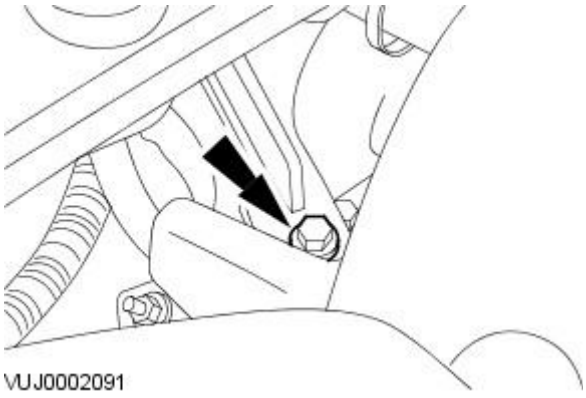


**9.** Install the fuel pressure sensor bracket retaining bolt.

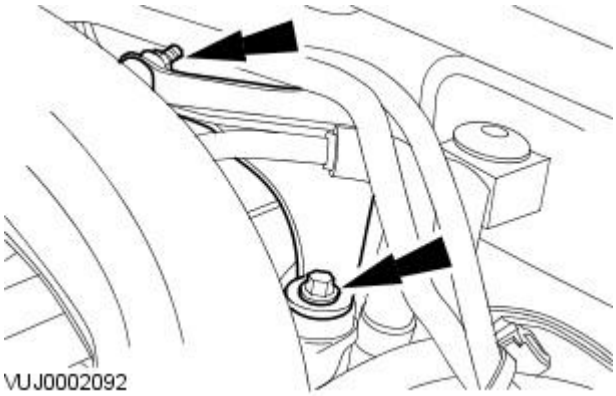


**10.** Attach the fuel pressure sensor bracket.

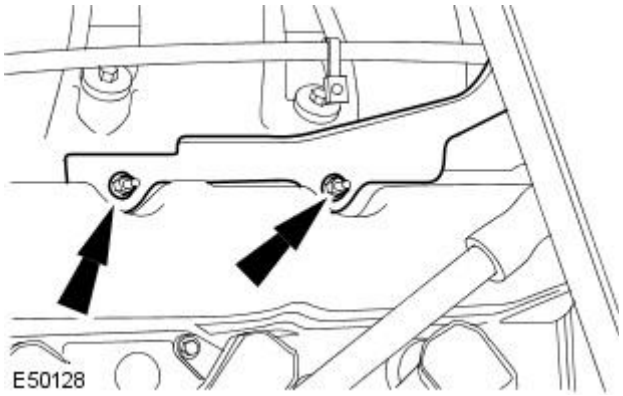


**11.** Install the engine cover left-hand side retaining bracket.

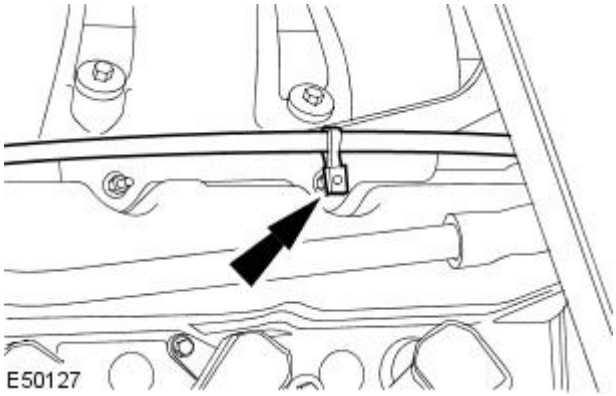


**12.** Attach the evaporative emission canister purge valve transfer pipe.

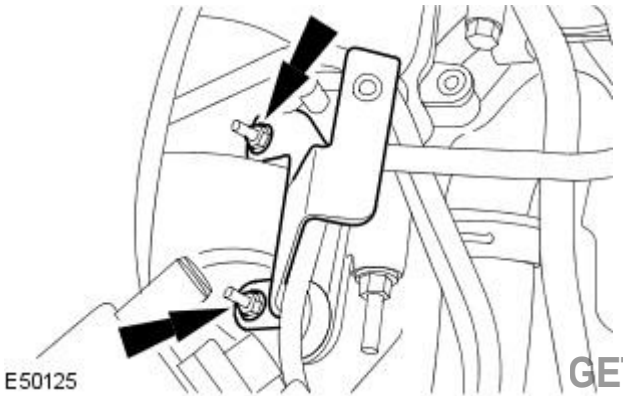


**13.** Install the engine cover front retaining bracket.

GETtheMANUALS.org

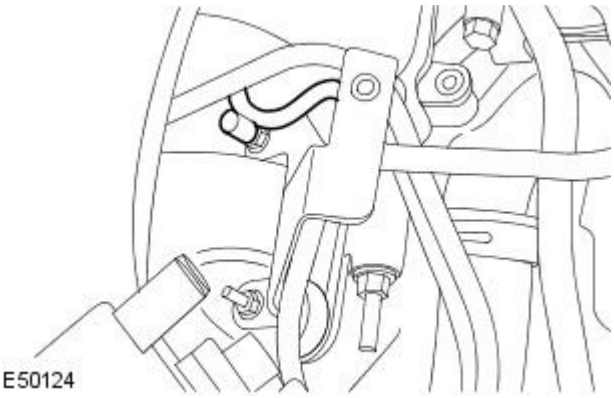


**14.** Attach the coolant temperature sensor wiring harness.

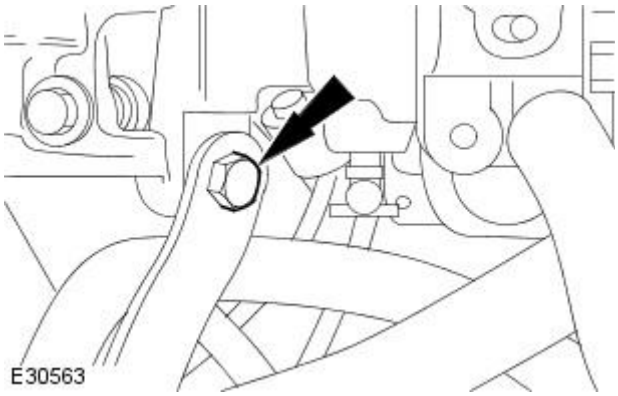


**15.** Attach the intake manifold front retaining bracket.

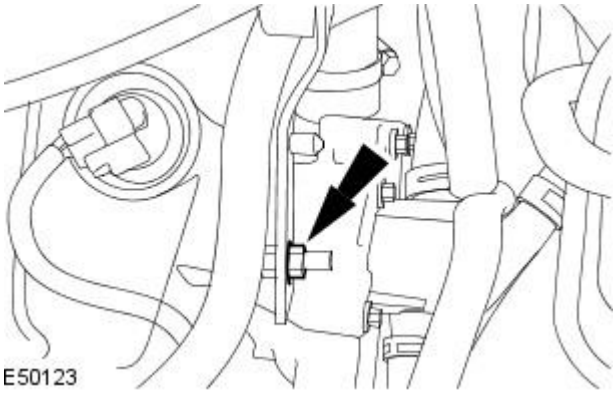


**16.** Fully tighten the intake manifold front retaining bracket.

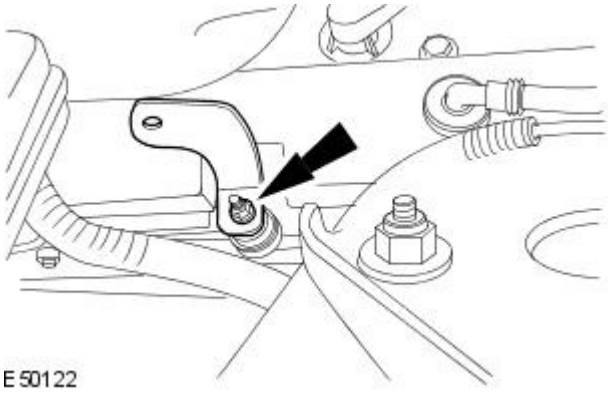


**17.** Fully tighten the intake manifold right-hand side retaining bracket.

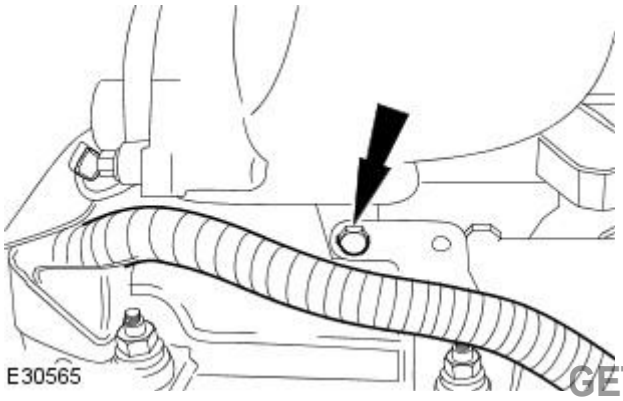


**18.** Fully tighten the intake manifold right-hand side retaining bracket.

GETtheMANUALS.org

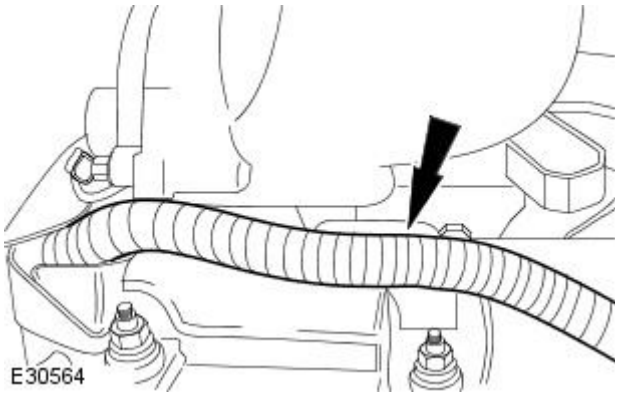


**19.** Attach the engine wiring harness to the intake manifold side retaining bracket.

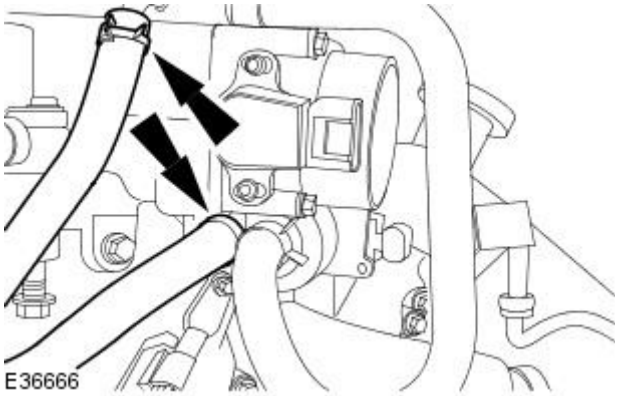


**20.** NOTE: Un-cap the coolant hoses.

Attach the coolant hoses to the throttle body.

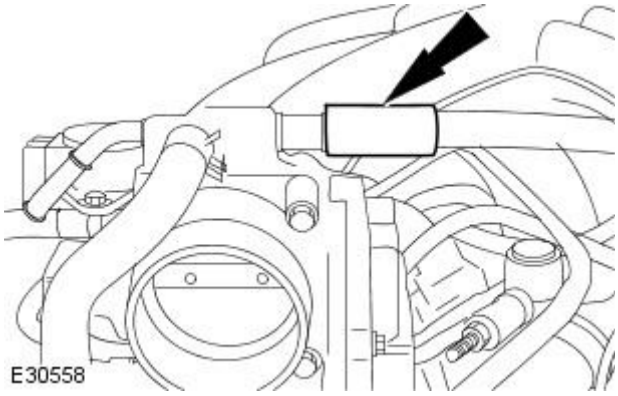


**21.** Connect the positive crankcase ventilation (PCV) hose.

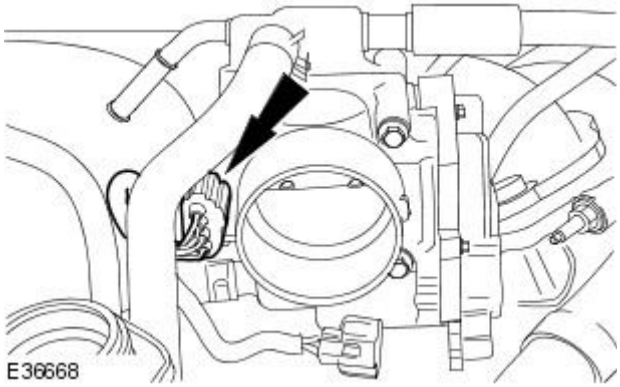


**22.** Connect the throttle position sensor (TPS) electrical connector.

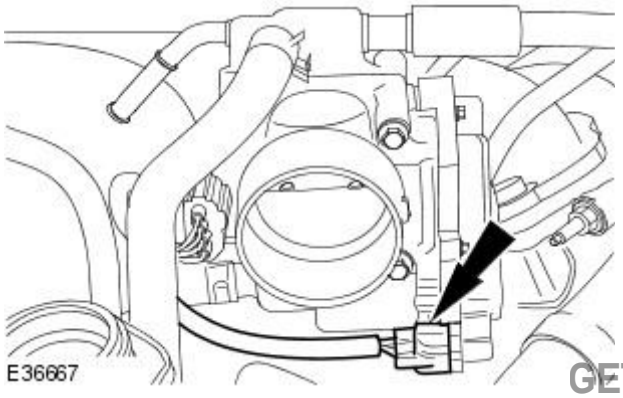


**23.** Connect the throttle motor electrical connector.

GETtheMANUALS.org

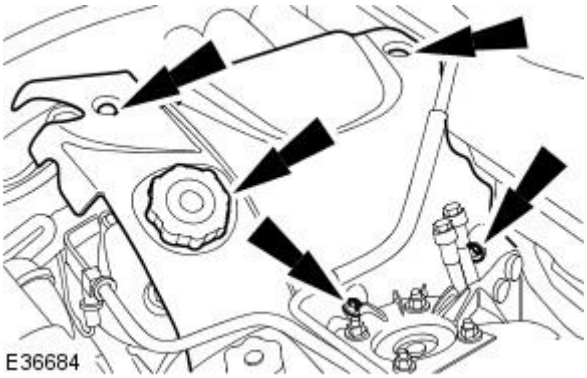


**24.** Install the engine cover.

**25.** Install the air cleaner outlet pipe.
For additional information, refer to: Air Cleaner Outlet Pipe - VIN Range: N52048->N99999 (303-12A Intake Air Distribution and Filtering - 2.5L NA V6 - AJV6/3.0L NA V6 - AJ27, Removal and Installation).

**26.** Fill the cooling system up to the MAX mark on the coolant expansion tank using a fifty percent mixture of Jaguar Premium Cooling System Fluid or equivalent, meeting Jaguar specification WSS M97B44-D and fifty percent water.

GETtheMANUALS.org

# Engine - 2.5L NA V6 - AJV6 / 3.0L NA V6 - AJ27 - Lower Intake Manifold

In-vehicle Repair

## Removal

1. Remove the intake manifold.
   For additional information, refer to: Intake Manifold (303-01A Engine - 2.5L NA V6 - AJV6/3.0L NA V6 - AJ27, In-vehicle Repair).
2. Disconnect the spring lock coupling.
   For additional information, refer to: Spring Lock Couplings (310-00 Fuel System - General Information, General Procedures).
3. Disconnect the fuel charging wiring harness.

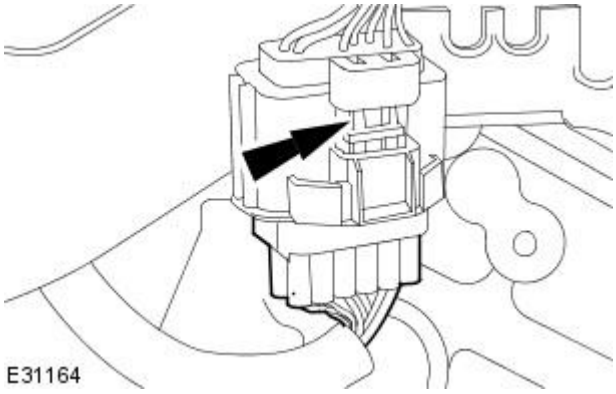


4. NOTE: Fuel may still be present in the fuel injection supply manifold.

• NOTE: Remove and discard the lower intake manifold O-ring seals.

Remove the lower intake manifold.

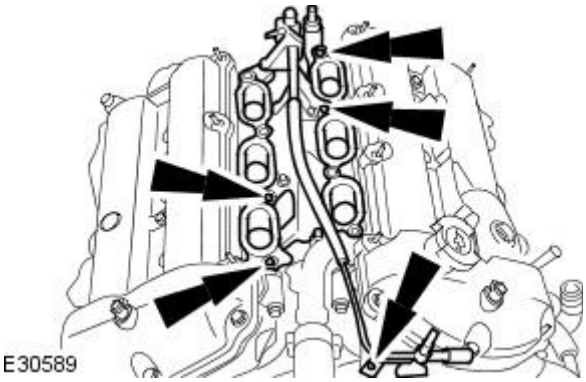


## Installation

1. NOTE: Install new O-ring seals.

• NOTE: Tighten in the sequence shown.

To install, reverse the removal procedure.

- Tighten the retaining bolts in the sequence shown.
- Tighten to 10 Nm.

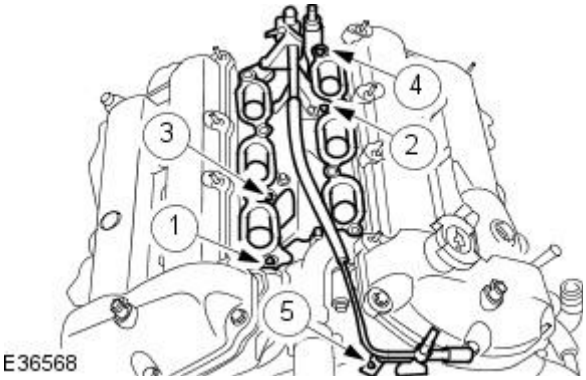


GETtheMANUALS.org

# Engine - 2.5L NA V6 - AJV6 / 3.0L NA V6 - AJ27 - Oil Cooler

In-vehicle Repair

## Removal

1. Carry out the cooling system draining procedure. For additional information, refer to Section 303-03A Engine Cooling / 303-03B Supercharger Cooling / 303-03C Engine Cooling.
2. Remove the left-hand engine mount.
   For additional information, refer to Engine Mount in this section.
3. Drain the engine oil.
4. Remove and discard the engine oil filter.

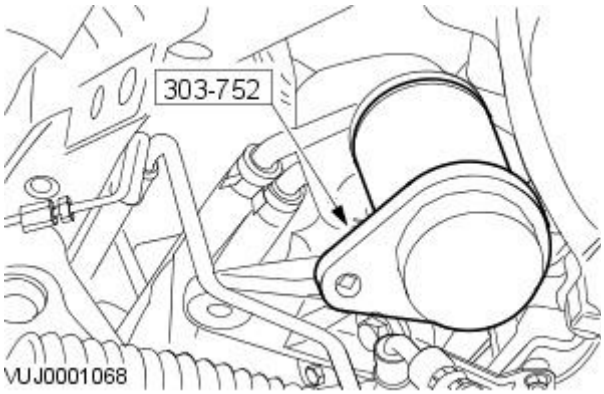


5. Disconnect the coolant hoses.

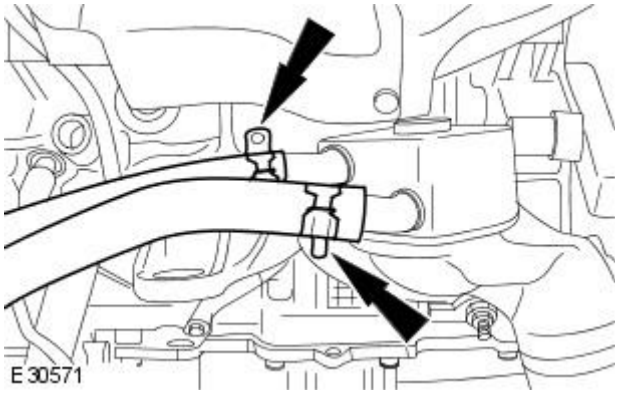


6. Remove the oil filter housing.
   1. Remove the center oil filter housing retaining bolt.
      1. Discard the 'O' ring seal.
   2. Remove the oil filter housing.

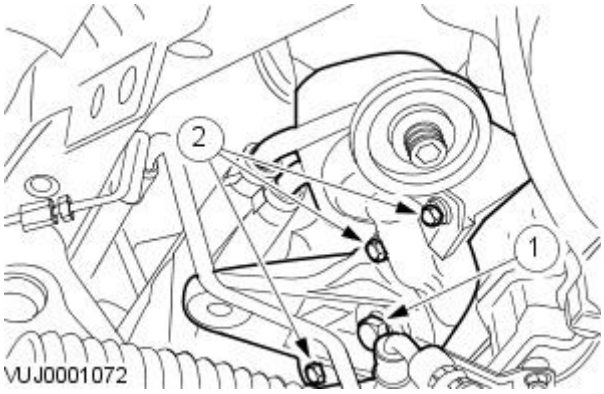


7. Remove the oil cooler.
   - Remove and discard the oil cooler O-ring seal.

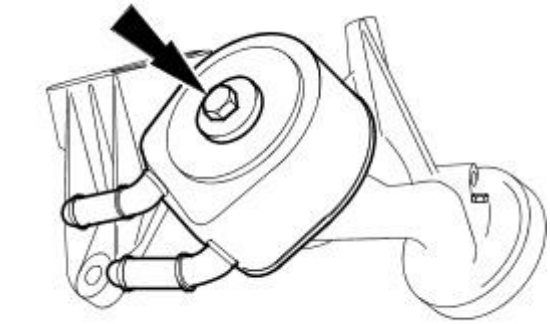


## Installation

GETtheMANUALS.org

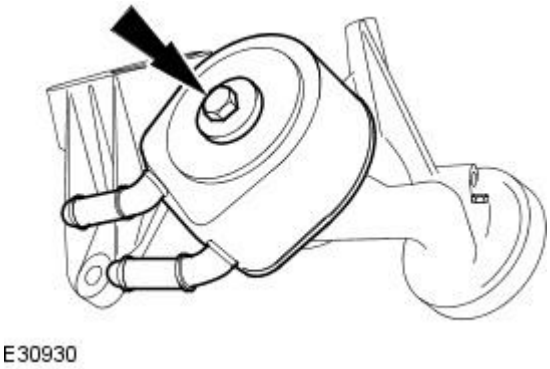


**1.** Install the oil cooler.

- Install a new oil cooler O-ring seal.
- Tighten to 58 Nm.

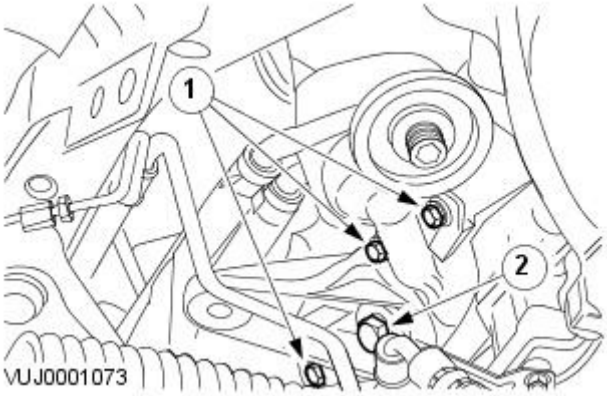


**2.** NOTE: Install a new 'O' ring seal.

Install the oil filter housing.

1. Loosely install the oil filter housing retaining bolts.
2. Loosely install the center oil filter housing retaining bolt.
3. Install the oil filter housing.

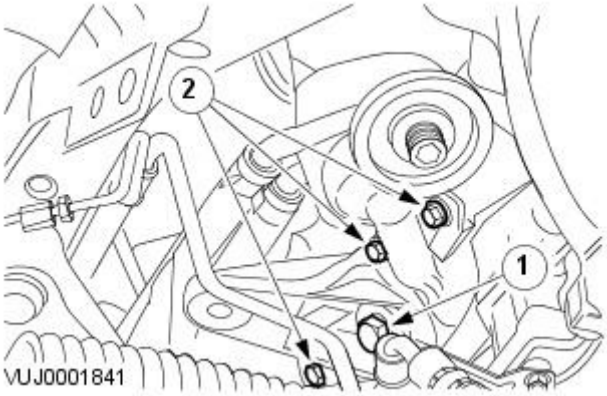


**3.** NOTE: Tighten the bolts in the indicated sequence.

Tighten all bolts to 25 Nm.

1. Tighten to 155 Nm.
2. Tighten to 40 Nm + 90 degrees.

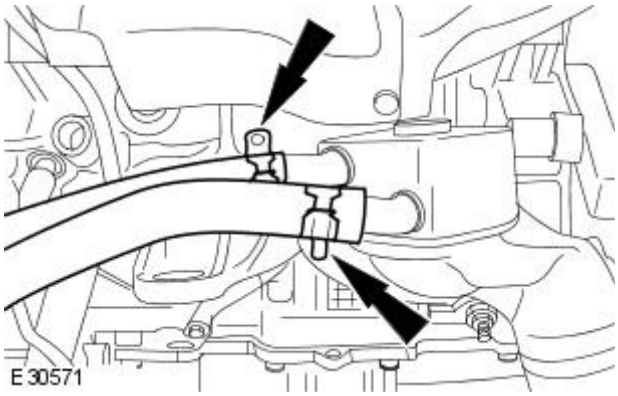


**4.** Connect the coolant hoses.

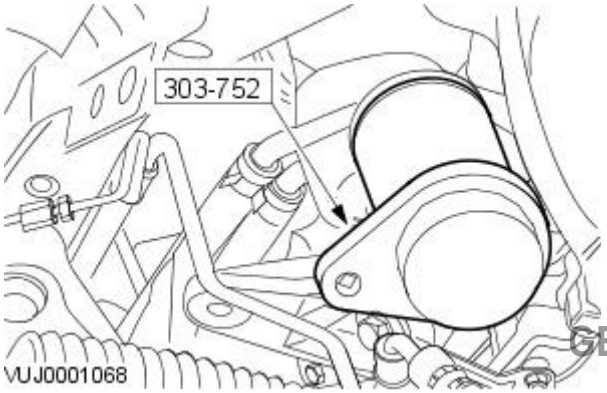


**5.** Install a new engine oil filter.

GETtheMANUALS.org

6. Install the left-hand engine mount.
   For additional information, refer to Engine Mount in this section.
7. NOTE: Install a new sealing washer to oil pan drain plug

   Install the oil pan drain plug

   - Tighten to 24 Nm.

8. Lower the vehicle.
9. Refill the engine with oil.
10. Carry out the coolant fill and bleeding procedure.

GETtheMANUALS.org

# Engine - 2.5L NA V6 - AJV6 / 3.0L NA V6 - AJ27 - Oil Pan

In-vehicle Repair

## Removal

All Vehicles

**1.** Disconnect the battery ground cable.
For additional information, refer to: Battery Disconnect and Connect (414-01 Battery, Mounting and Cables, General Procedures).

**2.** Open the bonnet.

**3.** Raise the oil level indicator approximately 100 mm.

**4.** WARNING: Do not work on or under a vehicle supported only by a jack. Always support the vehicle on safety stands.

Raise and support the vehicle.

**5.** Remove the air deflector.
For additional information, refer to: Air Deflector (501-02 Front End Body Panels, Removal and Installation).

**6.** Detach the accessory drive belt from the air conditioning (A/C) compressor and generator pulleys.

- Using a 3/8 inch square drive bar, rotate the accessory drive belt tensioner counter-clockwise.

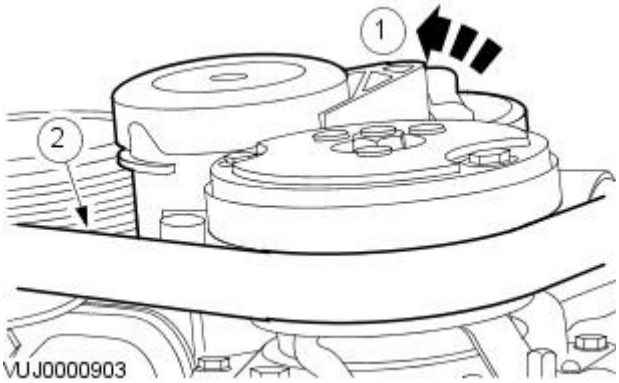


**7.** NOTE: A/C compressor supply and return lines shown removed for clarity.

Detach the A/C compressor.

- Using a suitable tie strap, tie the A/C compressor aside.

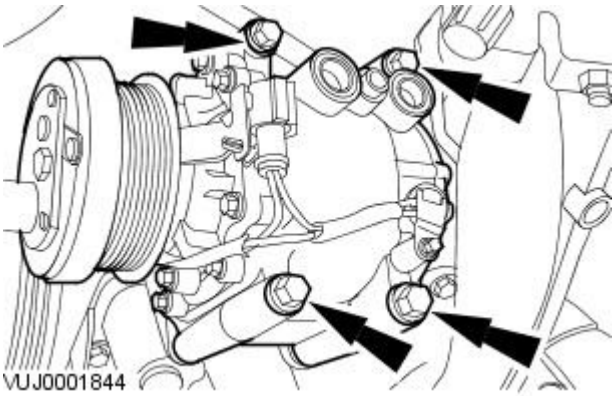


**8.** Detach the generator.

- Using a suitable tie strap, tie the generator aside.

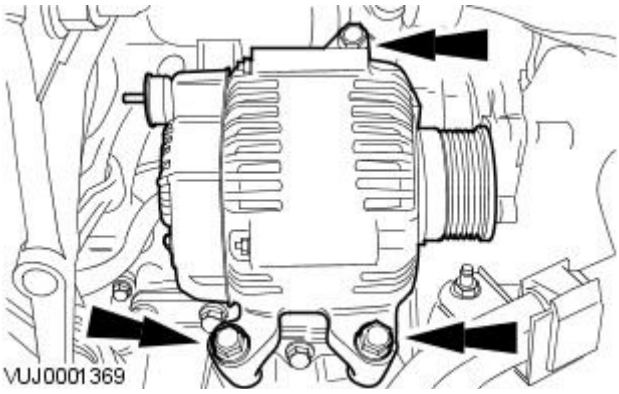


**9.** Drain the engine oil.

GETtheMANUALS.org

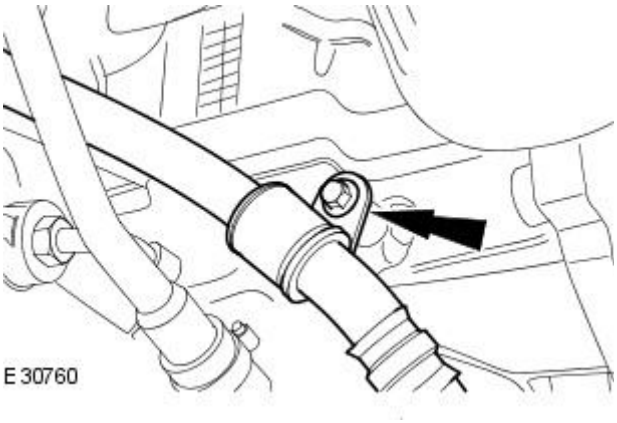


**10.** Detach the power steering hose.

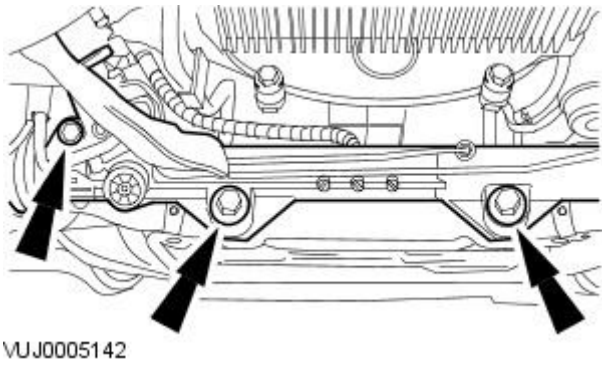


**11.** Detach the steering gear.

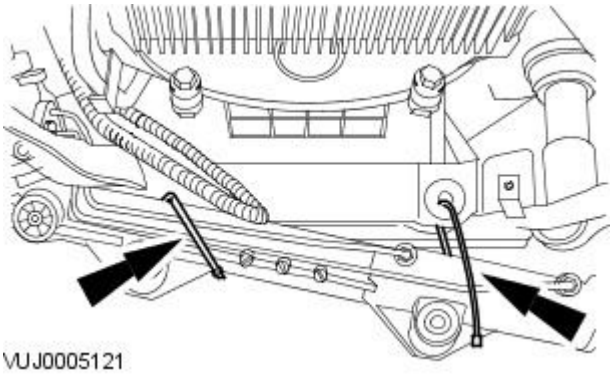


**12.** Secure the steering gear.

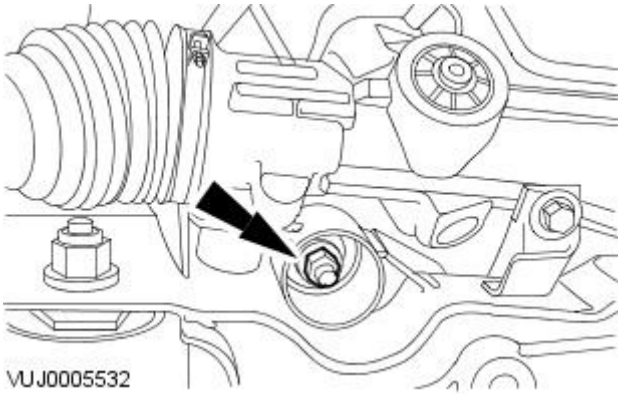


**13.** NOTE: Left-hand shown, right-hand similar.

Remove the engine mounts lower retaining nuts.

Vehicles with Automatic Transmission

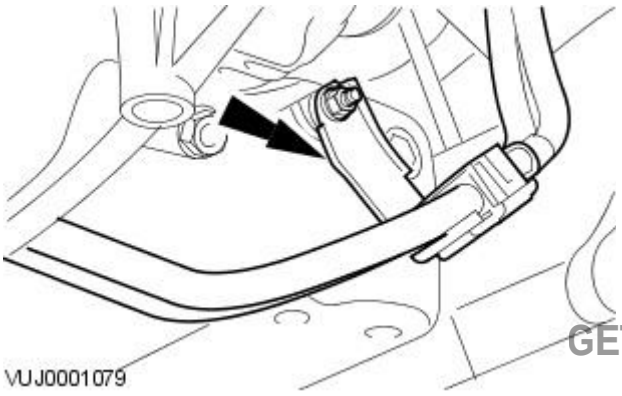


**14.** Detach the automatic transmission fluid cooler tubes retaining bracket.

GETtheMANUALS.org

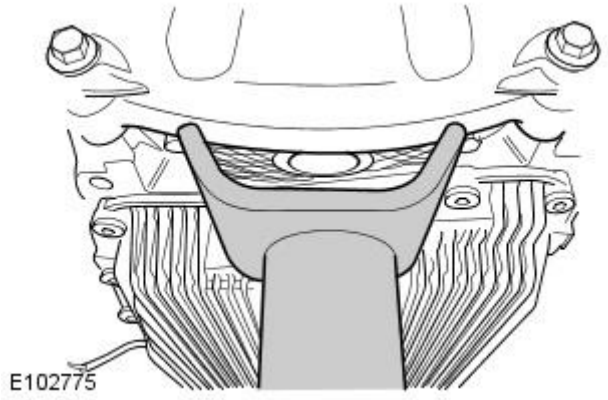


**15.** CAUTIONS:

The engine and transmission must not be supported on the transmission oil pan. Failure to follow this instruction may result in damage to the vehicle.

Take steps to prevent damage to the transmission casing.

Support the engine and transmission using a suitable transmission jack or axle stand.

- Position the support on the transmission bell housing behind the oil pan.

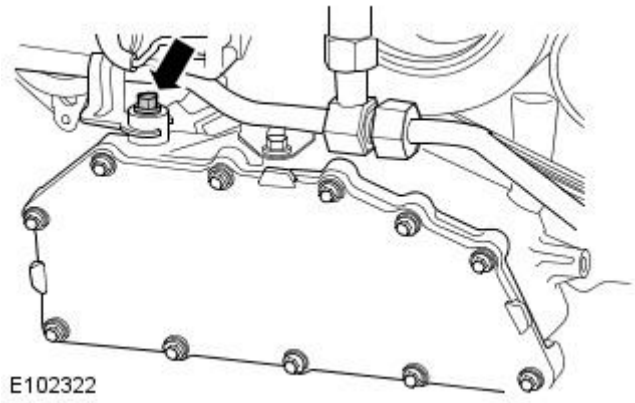


**16.** NOTE: Where fitted.

Remove the bolt securing the secondary air injection (AIR) tube to the oil pan.

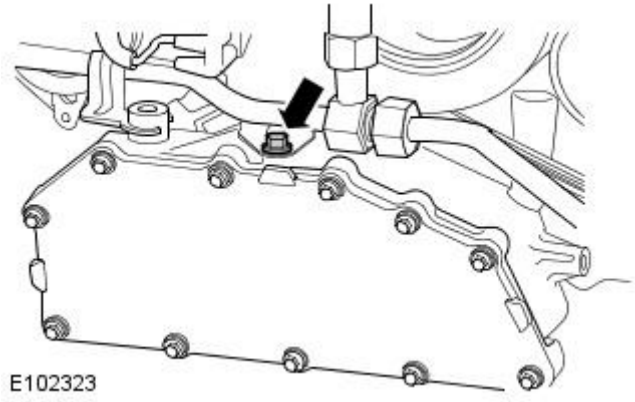


**17.** NOTE: Where fitted.

Remove the bolt securing the support bracket to the oil pan.

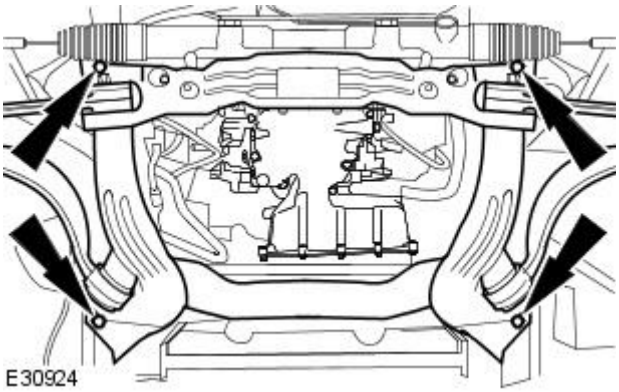


**18.** WARNING: Do not remove the subframe retaining bolts. Failure to follow this procedure may result in personal injury.

Loosen the front and rear subframe retaining bolts to enable the oil pan to be removed.

GETtheMANUALS.org

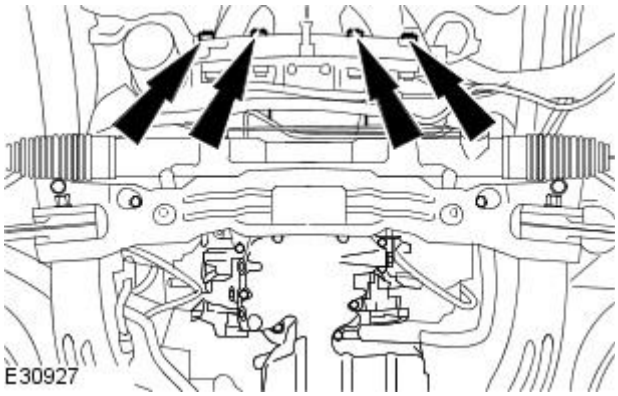


**19.** Remove the oil pan rear retaining bolts.

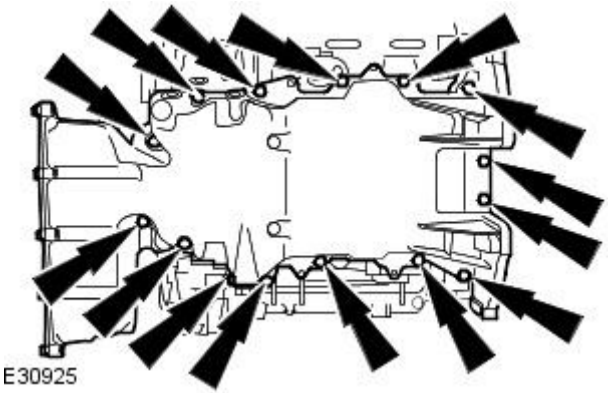


**20.** Remove the oil pan.

- Remove and discard the oil pan gasket.
- Clean and inspect the oil pan and cylinder block sealing surfaces using metal surface cleaner or equivalent meeting Jaguar specification.

## Installation

All Vehicles

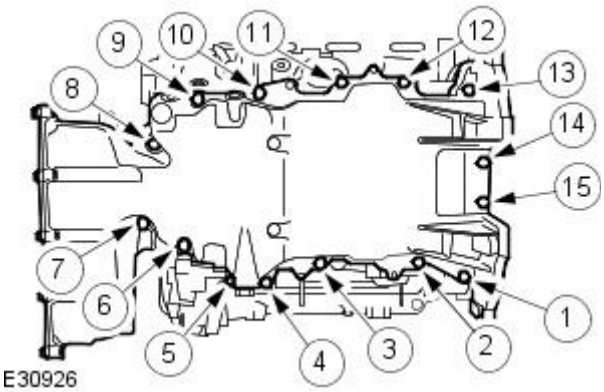


**1.** NOTE: Apply a 10 mm dot of silicone gasket and sealant meeting Jaguar specification to the engine block and front cover mating surface.

• NOTE: Install a new gasket.

• NOTE: Loosely install the oil pan to transmission housing bolts.

• NOTE: Tighten all oil pan retaining bolts with in six minutes of applying the sealer.

Install the oil pan.

- Complete the tightening sequence.
- Tighten to 25 Nm.

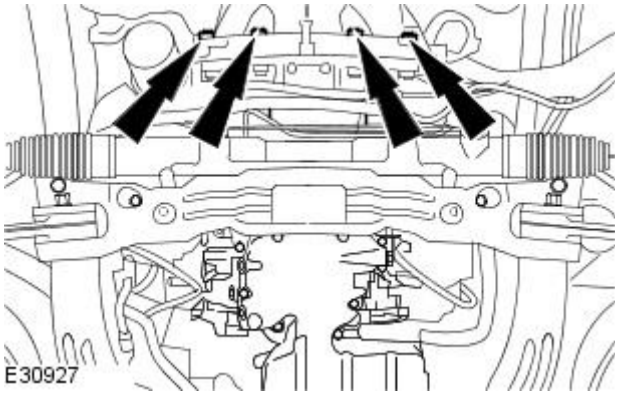


**2.** Install the oil pan rear retaining bolts.

- Tighten to 45 Nm.

GETtheMANUALS.org

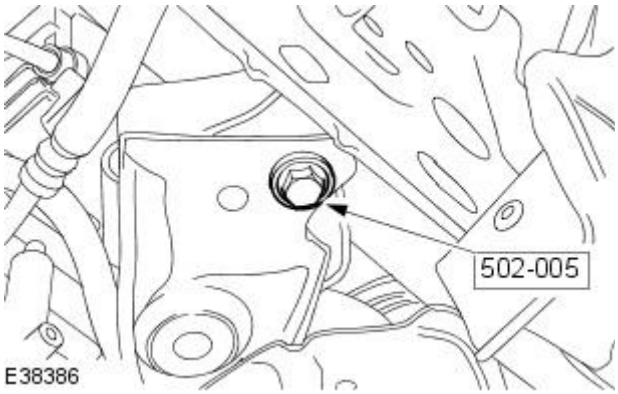


**3.** NOTE: Left-hand shown, right-hand similar.

Install the special tool.

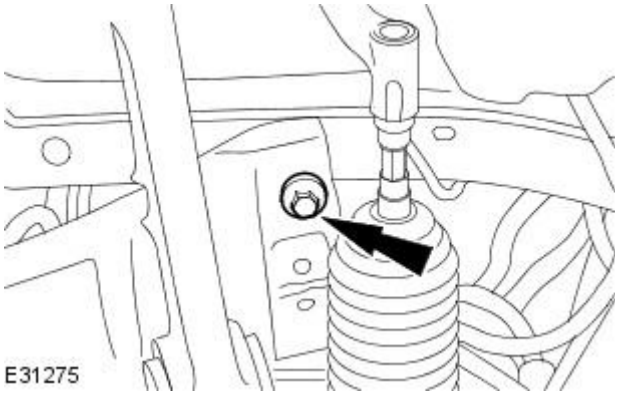


**4.** NOTE: Left-hand shown, right-hand similar.

Tighten the front subframe rear retaining bolts.

- Tighten to 80 Nm + 240°.

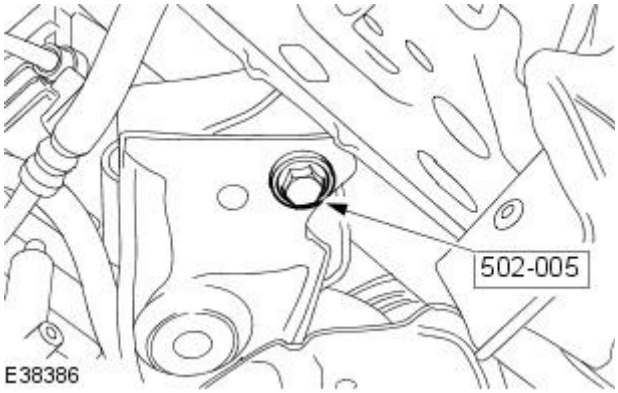


**5.** NOTE: Left-hand shown, right-hand similar.

Remove the special tool.

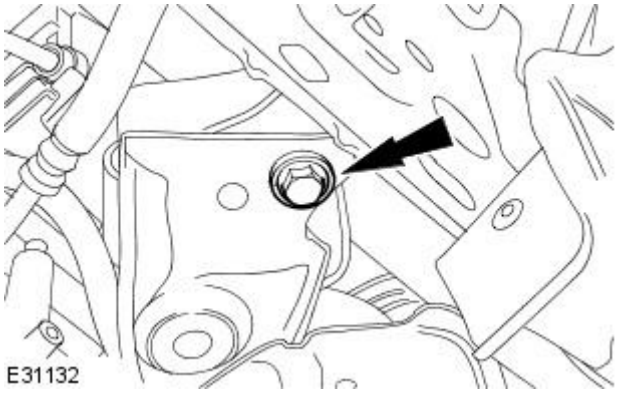


**6.** NOTE: Left-hand shown, right-hand similar.

Tighten the front subframe front retaining bolts.

- Tighten to 150 Nm + 240°.

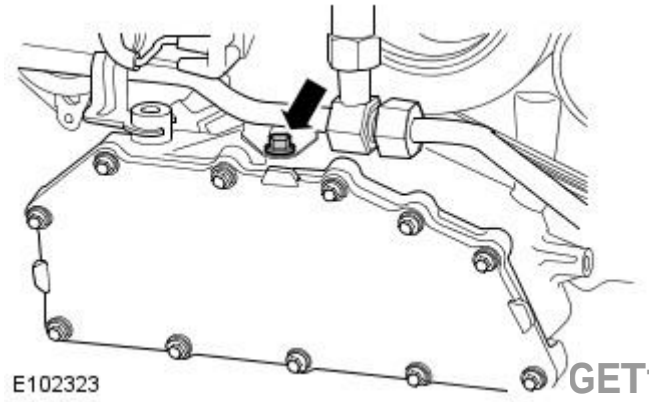


**7.** NOTE: Where fitted.

Install the bolt securing the support bracket to the oil pan.

- Tighten to 10 Nm.

GETtheMANUALS.org

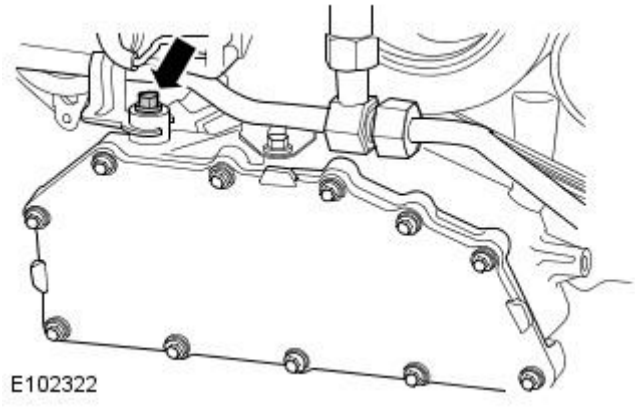


**8.** NOTE: Where fitted.

Install the bolt securing the AIR tube to the oil pan.

- Tighten to 10 Nm.

Vehicles with Automatic Transmission

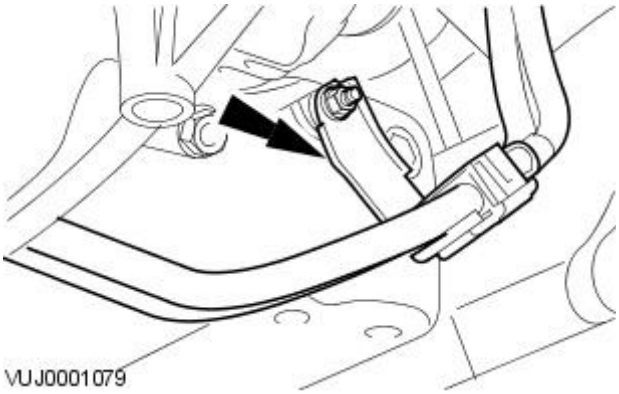


**9.** Attach the automatic transmission fluid cooler tubes retaining bracket.

- Tighten to 10 Nm.

All Vehicles

**10.** Remove the engine and transmission support.

**11.** NOTE: Left-hand shown, right-hand similar.

Install the engine mounts lower retaining nuts.

- Tighten to 63 Nm.

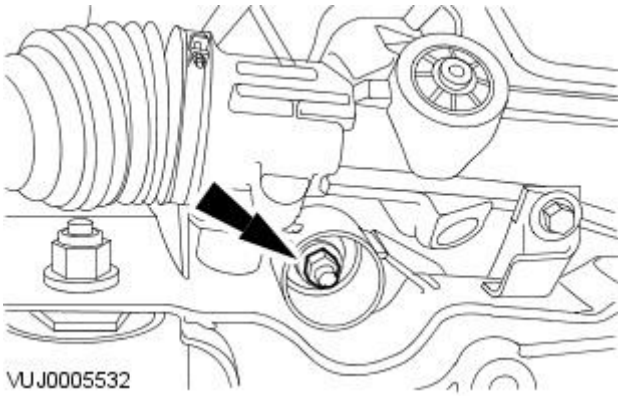


**12.** Detach the steering gear.

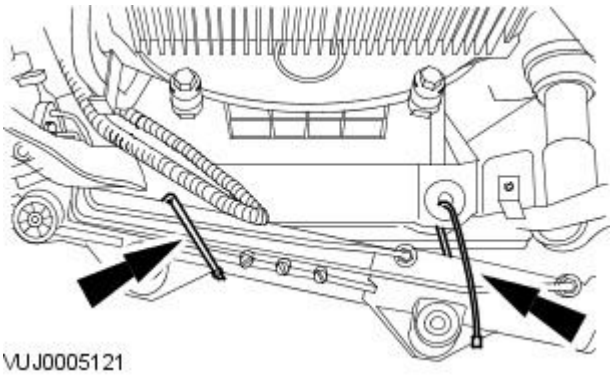


GETtheMANUALS.org

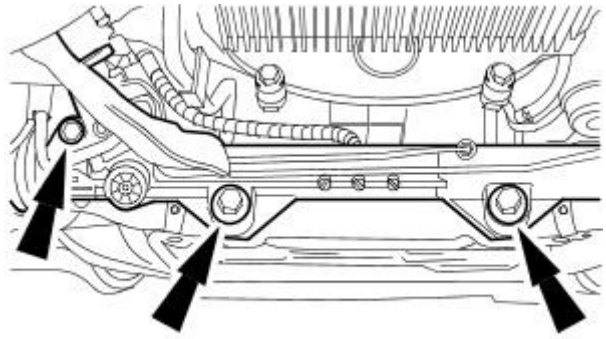


**13.** Attach the steering gear.

- Tighten to 100 Nm.

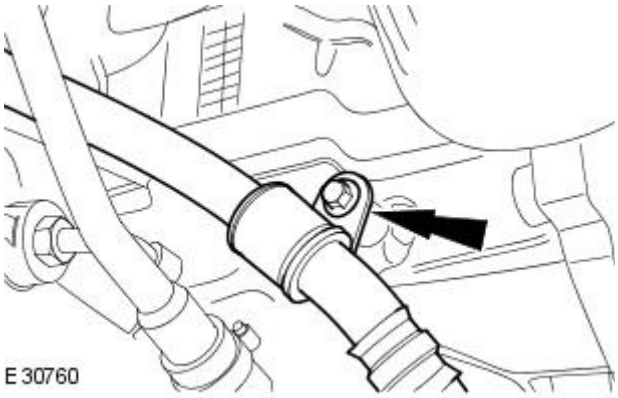


**14.** Attach the power steering hose.

- Tighten to 10 Nm.

**15.** NOTE: Install a new sealing washer to oil pan drain plug

Install the oil pan drain plug.

- Tighten to 24 Nm.

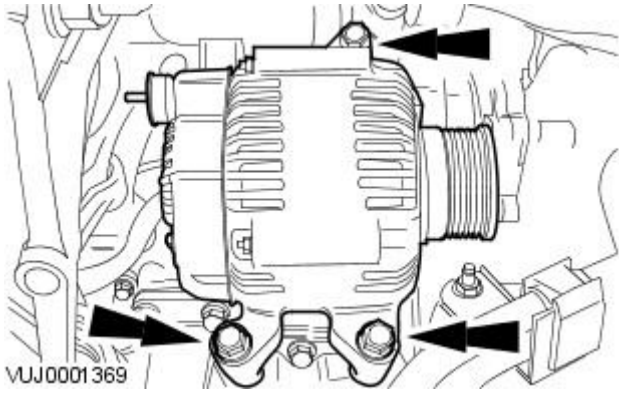


**16.** Attach the generator.

- Cut and remove the tie strap supporting the generator.
- Tighten to 48 Nm.

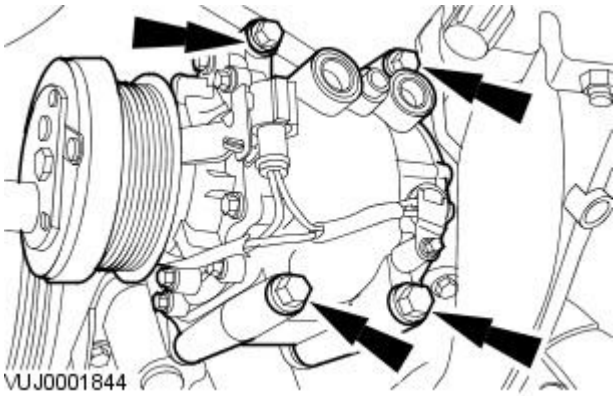


**17.** NOTE: A/C compressor supply and return lines shown removed for clarity.

Attach the A/C compressor.

- Cut and remove the tie strap supporting the A/C compressor.
- Tighten to 25 Nm.

GETtheMANUALS.org

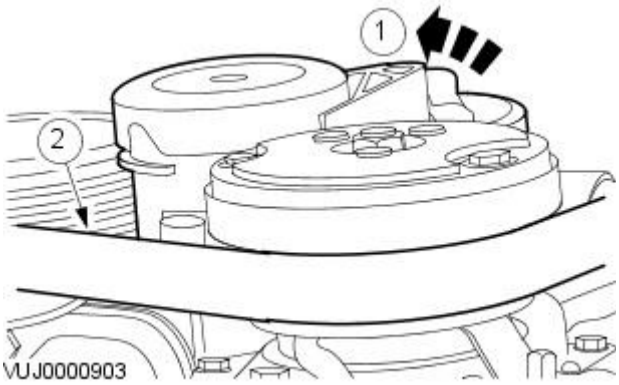


**18.** Attach the accessory drive belt.

- Rotate the accessory drive belt tensioner counter-clockwise.

**19.** Install the air deflector.
For additional information, refer to: Air Deflector (501-02 Front End Body Panels, Removal and Installation).

**20.** Connect the battery ground cable.
For additional information, refer to: Battery Disconnect and Connect (414-01 Battery, Mounting and Cables, General Procedures).

**21.** Refill the engine with oil.

GETtheMANUALS.org

# Engine - 2.5L NA V6 - AJV6 / 3.0L NA V6 - AJ27 - Oil Pump

In-vehicle Repair

## Removal

1. Remove the timing drive components.
   For additional information, refer to Timing Drive Components in this section.
2. NOTE: Engine inverted for clarity.

   Remove the oil pump tube.

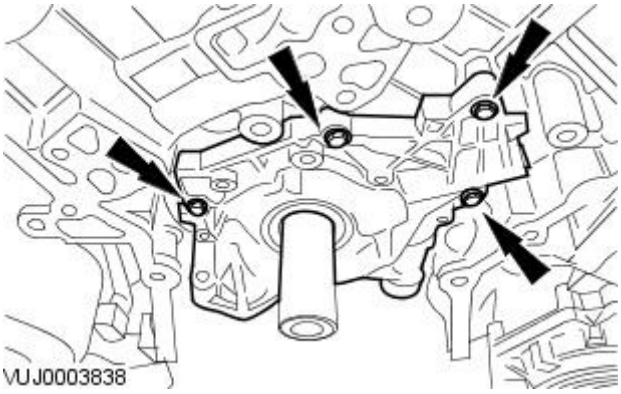


3. Remove the oil pump.
   - Remove and discard the O-ring seal.
   - Inspect the oil pump for damage and wear.

## Installation

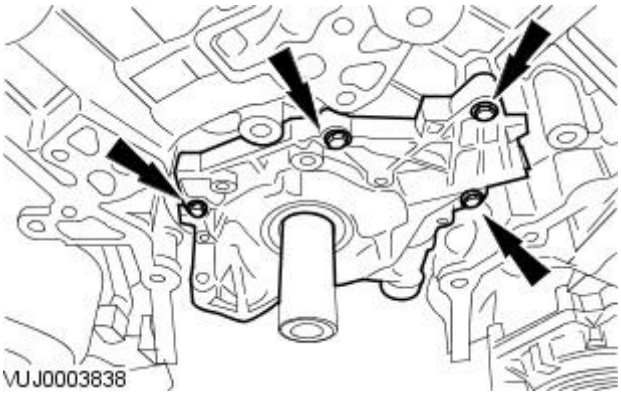


1. CAUTIONS:

   Install the oil pump flush to the cylinder block for correct sealing.

   Rotate the inner rotor of the oil pump to align with the flats on the crankshaft before installation.

   Install the oil pump.
   - Tighten to 10 Nm.

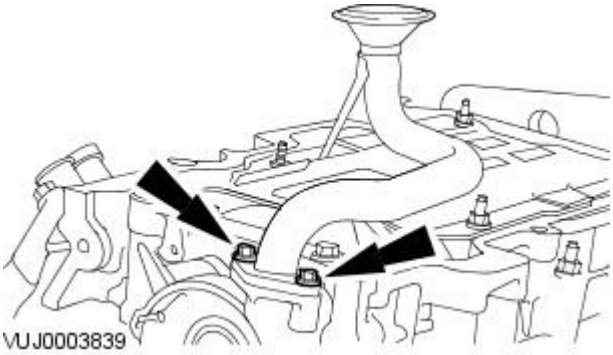


2. NOTE: Engine inverted for clarity.

   Install the oil pump tube.
   - Install a new O-ring seal.
   - Tighten to 10 Nm.

GETtheMANUALS.org

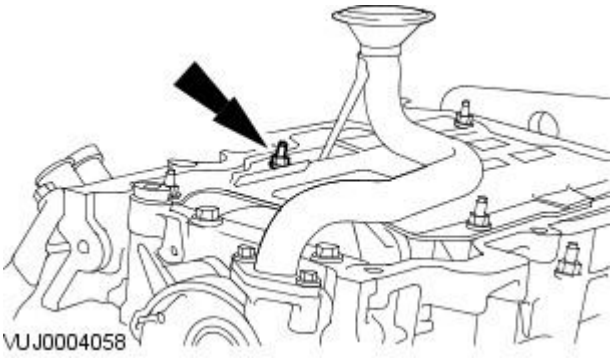


**3.** NOTE: Engine inverted for clarity.

Tighten to 5 Nm + 45°.

**4.** Install the timing drive components.
For additional information, refer to Timing Drive Components in this section.

GETtheMANUALS.org

# Engine - 2.5L NA V6 - AJV6 / 3.0L NA V6 - AJ27 - Timing Drive Components

In-vehicle Repair

## Removal

**1.** Remove the engine front cover.
For additional information, refer to: Engine Front Cover (303-01A Engine - 2.5L NA V6 - AJV6/3.0L NA V6 - AJ27, In-vehicle Repair).

**2.** Remove the spark plugs.

**3.** NOTE: Note the position of the crankshaft position (CKP) sensor pulse wheel during removal. It must be returned to its original position during installation.

Remove the crankshaft position (CKP) sensor pulse wheel.

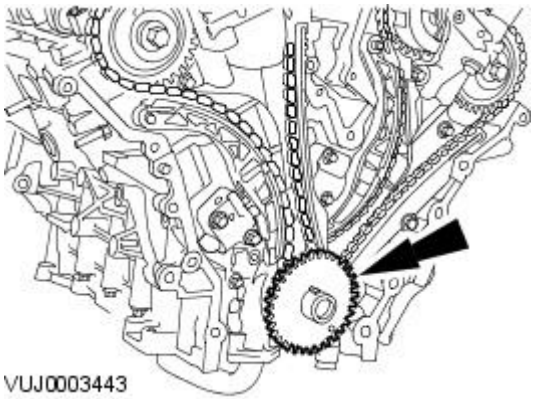
VUJ0003443

**4.** CAUTION: Do not rotate the crankshaft counterclockwise. The timing chains may bind causing engine damage.

Install the crankshaft pulley retaining bolt and washer.

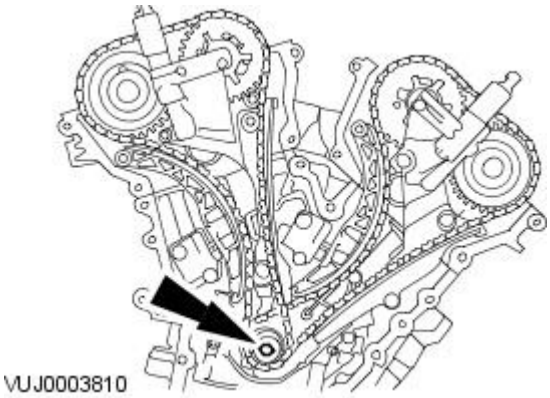
VUJ0003810

**5.** CAUTION: Do not rotate the crankshaft counterclockwise. The timing chains may bind causing engine damage.

Rotate the crankshaft clockwise until the crankshaft keyway is at the 7 O'clock position, the alignment mark on the right-hand intake camshaft sprocket is at the 1 O'clock position and the alignment mark on the right-hand exhaust camshaft sprocket is at the 8 O'clock position.

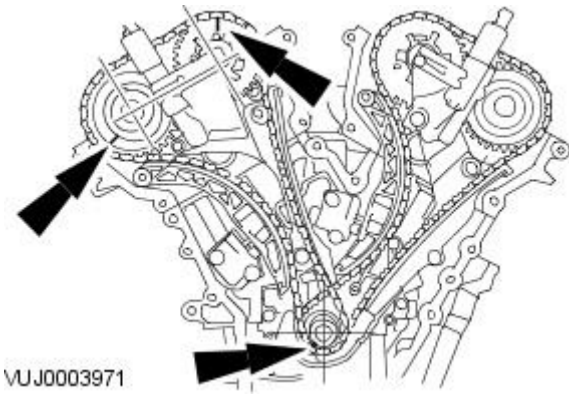
VUJ0003971

**6.** Release the timing chain tensioner ratchet.

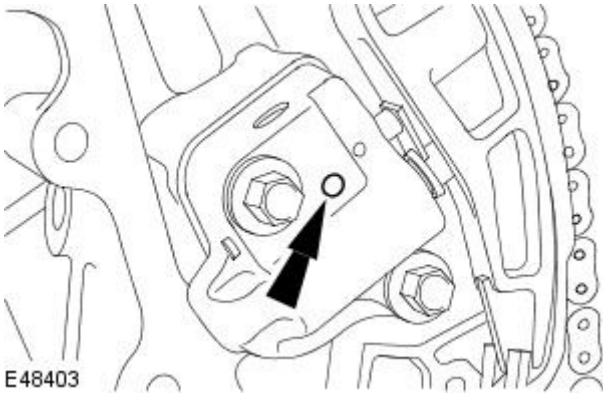
E48403

GETtheMANUALS.org

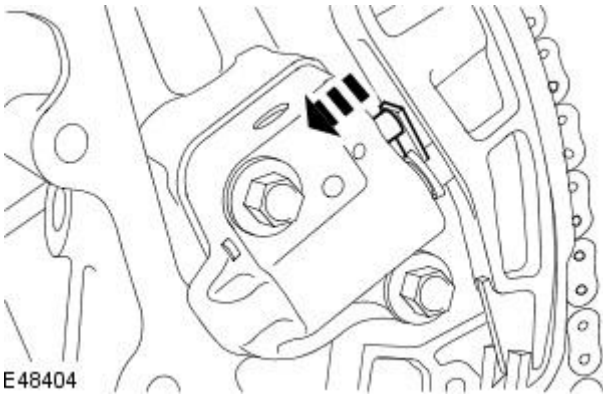


**7.** NOTE: Keep the timing chain tensioner ratchet released.

Reposition the timing chain tensioner plunger.

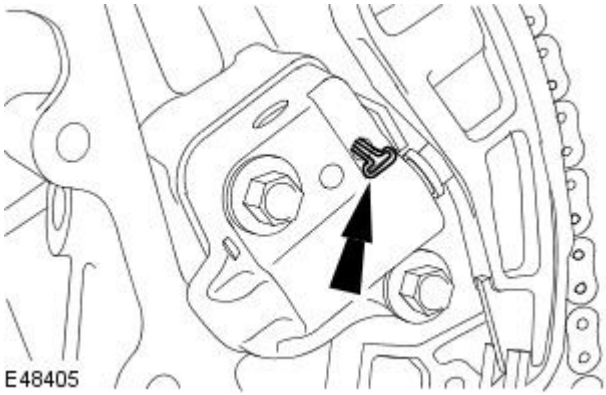


**8.** Retain the timing chain tensioner plunger.

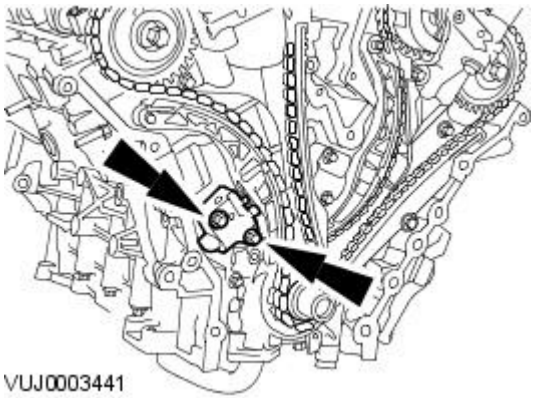


**9.** Remove the right-hand timing chain tensioner.

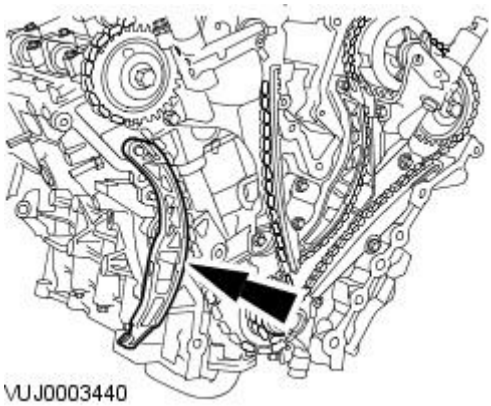


**10.** Remove the right-hand timing chain outer guide.

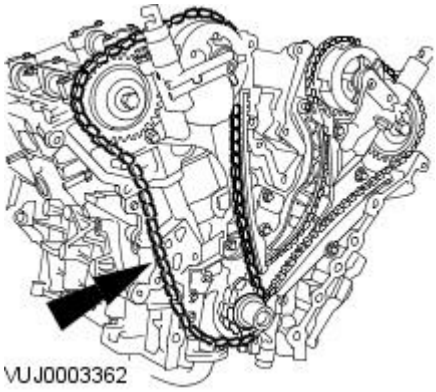


**11.** Remove the right-hand timing chain.

GETtheMANUALS.org

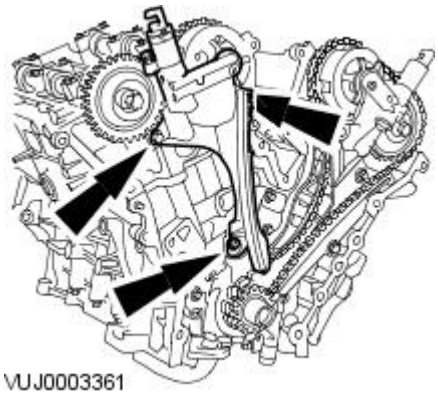


**12.** CAUTION: Inspect and replace the O-ring seal if necessary.

Remove the right-hand timing chain inner guide.

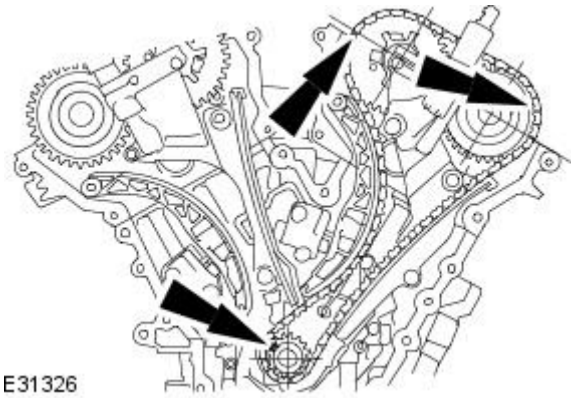


**13.** CAUTION: Do not rotate the crankshaft counterclockwise. The timing chains may bind causing engine damage.

Rotate the crankshaft clockwise until the crankshaft keyway is at the 11 O'clock position, the alignment mark on the left-hand intake camshaft sprocket is at the 9 O'clock position and the alignment mark on the left-hand exhaust camshaft sprocket is at the 2 O'clock position.

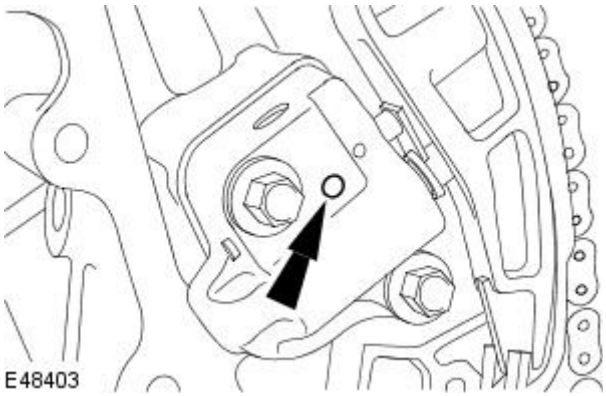


**14.** NOTE: Right-hand bank shown, left-hand bank similar.

Release the timing chain tensioner ratchet.

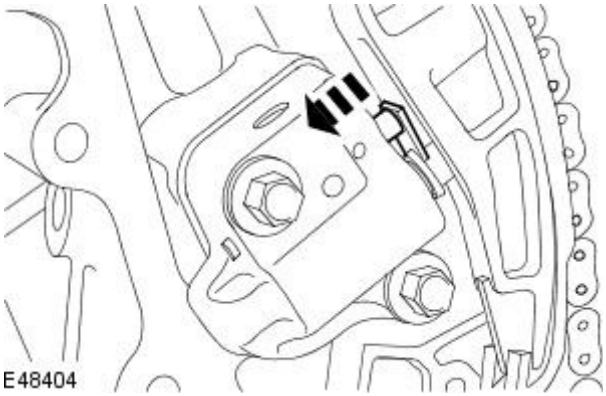


**15.** NOTE: Right-hand bank shown, left-hand bank similar.

- NOTE: Keep the timing chain tensioner ratchet released.

Reposition the timing chain tensioner plunger.

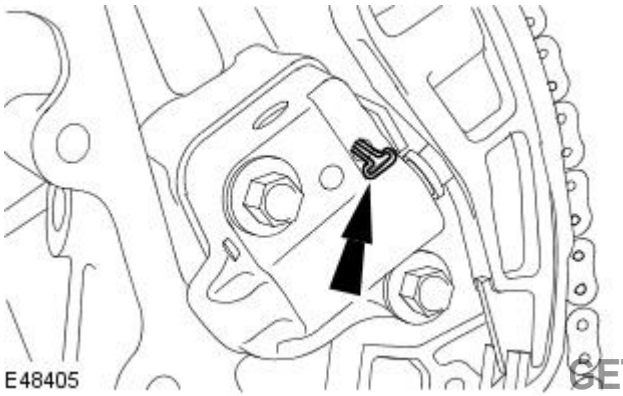


**16.** NOTE: Right-hand bank shown, left-hand bank similar.

Retain the timing chain tensioner plunger.

GETtheMANUALS.org

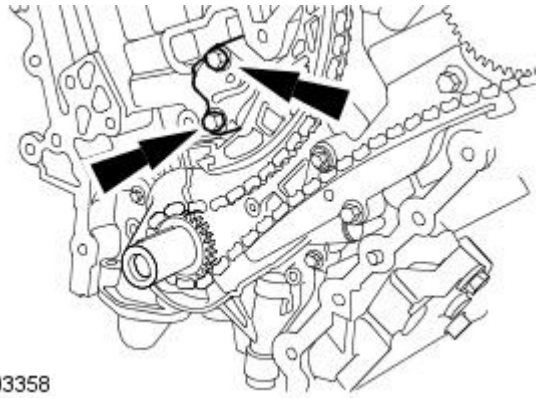

VUJ0003358

**17.** Remove the left-hand timing chain tensioner.

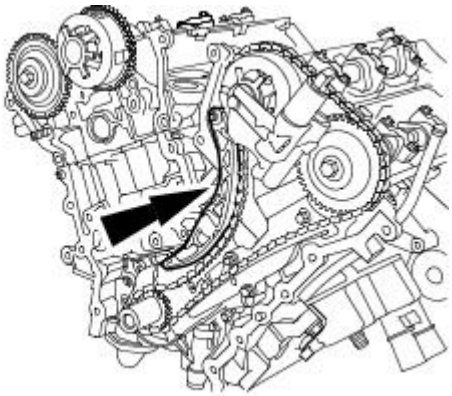

VUJ0003357

**18.** Remove the left-hand timing chain inner guide.

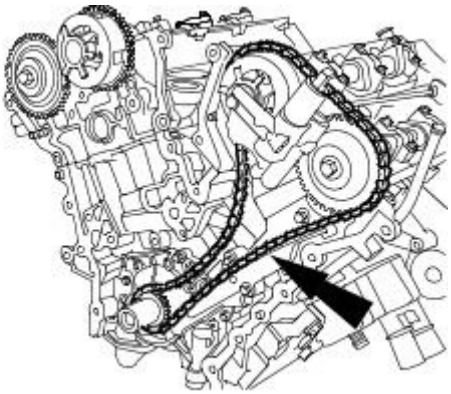

VUJ0003356

**19.** Remove the left-hand timing chain.

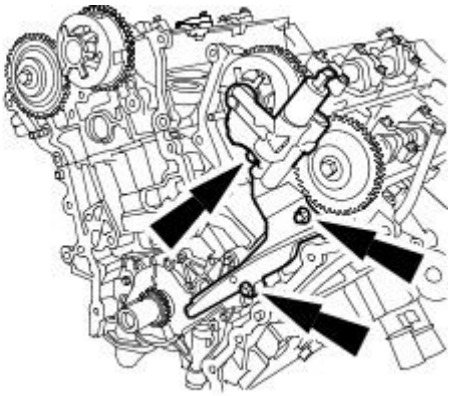

VUJ0003355

**20.** CAUTION: Inspect and replace the O-ring seal if necessary.

Remove the left-hand timing chain outer guide.

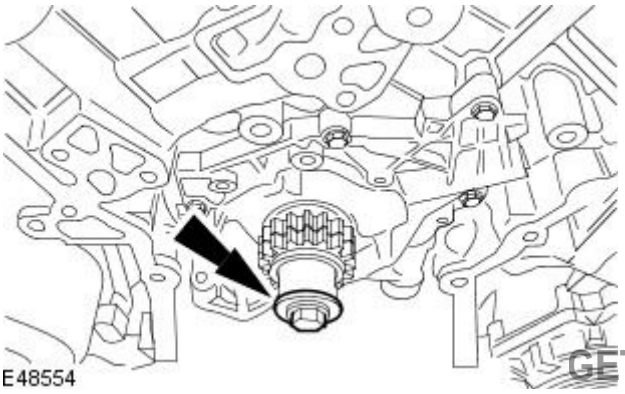

E48554

**21.** CAUTION: Make sure the crankshaft keyway is at the 9 O'clock position before any further engine repairs are carried out.

Remove the crankshaft pulley retaining bolt and washer.

GETtheMANUALS.org

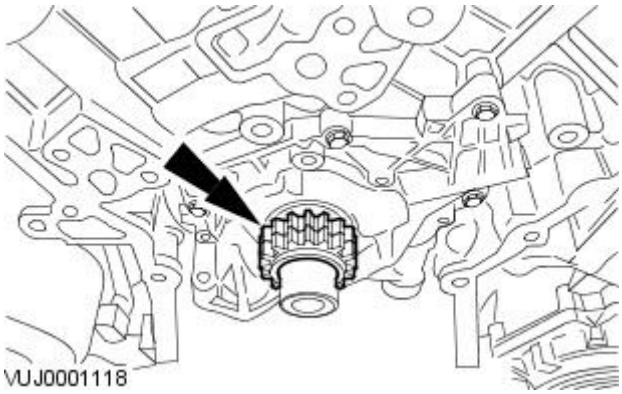


**22.** Remove the crankshaft sprocket.

## Installation

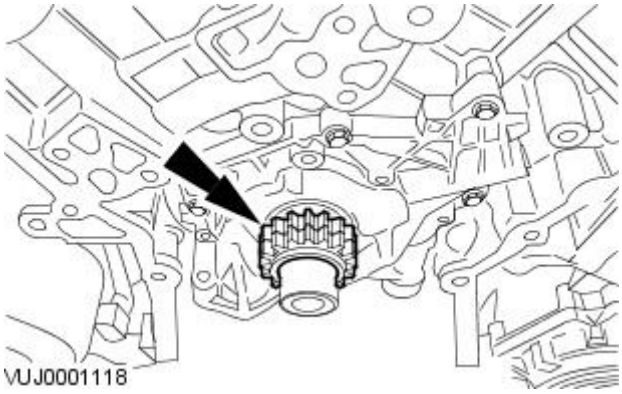


**1.** NOTE: Make sure the crankshaft sprocket timing marks are facing outwards.

Install the crankshaft sprocket.

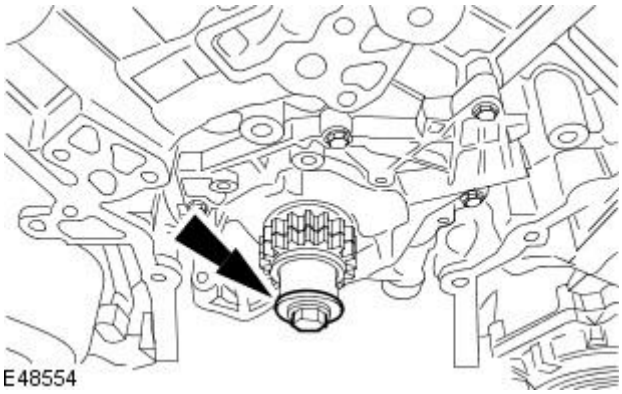


**2.** CAUTION: Make sure the crankshaft keyway is at the 9 O'clock position before the camshaft positions are aligned.

Install the crankshaft pulley retaining bolt and washer.

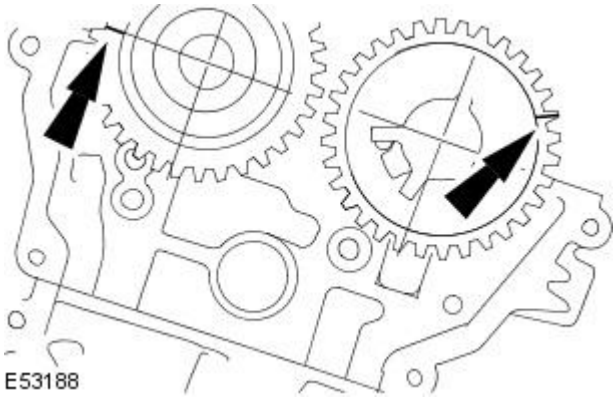


**3.** Rotate the left-hand intake camshaft clockwise until the camshaft sprocket alignment mark is at the 9 O'clock position and rotate the left-hand exhaust camshaft sprocket clockwise until the camshaft sprocket alignment mark is at the 2 O'clock position.

GETtheMANUALS.org

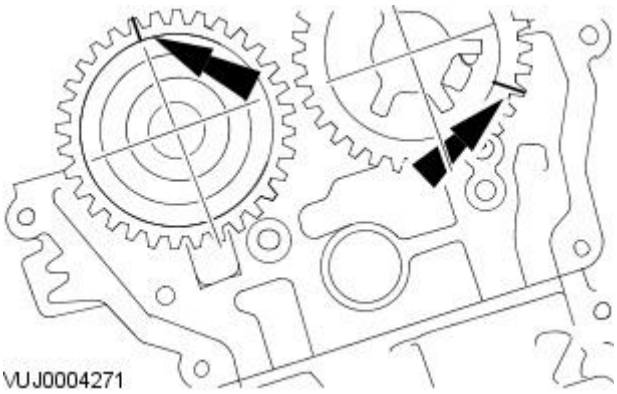

VUJ0004271

**4.** Rotate the right-hand intake camshaft clockwise until the camshaft sprocket alignment mark is at the 5 O'clock position and rotate the right-hand exhaust camshaft sprocket clockwise until the camshaft sprocket alignment mark is at the 12 O'clock position.

**5.** Rotate the crankshaft clockwise until the keyway is at the 11 O'clock position.

**6.** CAUTIONS:

Inspect and replace the O-ring seal if necessary.

Make sure the O-ring seal is correctly installed.

Install the left-hand timing chain outer guide.

- Tighten the retaining bolts in the sequence shown in two stages.
- Stage 1: Tighten bolt 1 to 25 Nm.
- Stage 2: Tighten bolts 2 to 25 Nm.

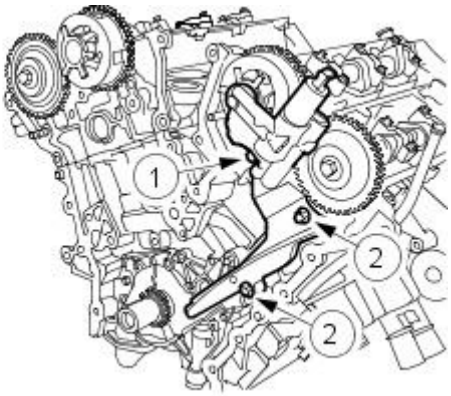


VUJ0003807

**7.** CAUTIONS:

Make sure the crankshaft keyway is at the 11 O'clock position, the alignment mark on the left-hand intake camshaft sprocket is at the 9 O'clock position and the alignment mark on the left-hand exhaust camshaft sprocket is at the 2 O'clock position.

Make sure the timing chain alignment marks are correctly positioned to the crankshaft sprocket and camshaft sprocket alignment marks.

Make sure the timing chain slack is on the tensioned side of the timing chain.

Install the left-hand timing chain.

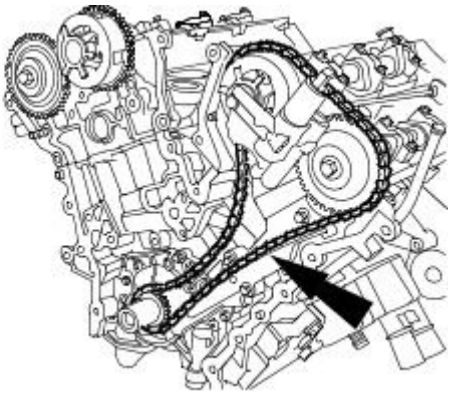

VUJ0003356

**8.** Install the left-hand timing chain inner guide.

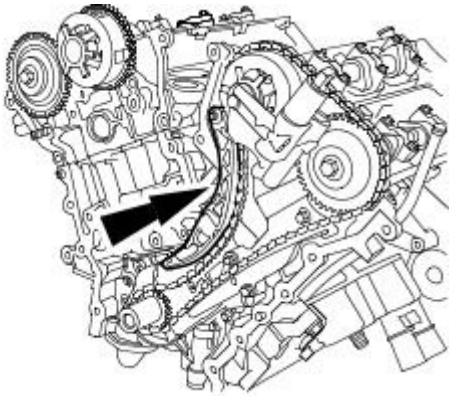

VUJ0003357

GETtheMANUALS.org

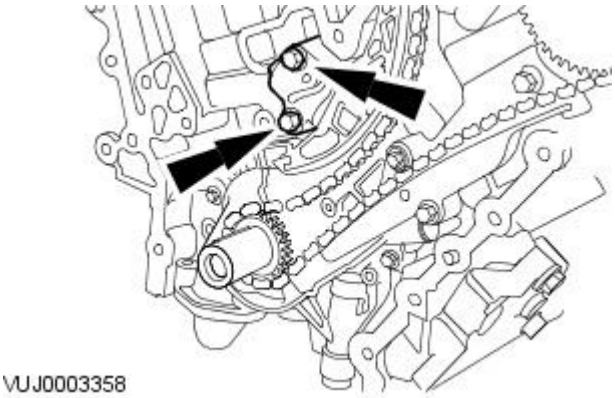


**9.** CAUTION: Do not manually adjust the timing chain tensioner.

Install the left-hand timing chain tensioner.

- Tighten to 25 Nm.

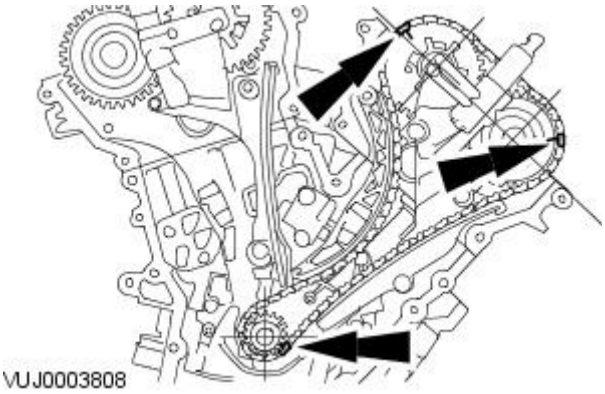


**10.** CAUTION: Do not manually adjust the timing chain tensioner.

Make sure the left-hand timing chain alignment marks have remained correctly positioned to the camshaft sprocket and crankshaft sprocket alignment marks.

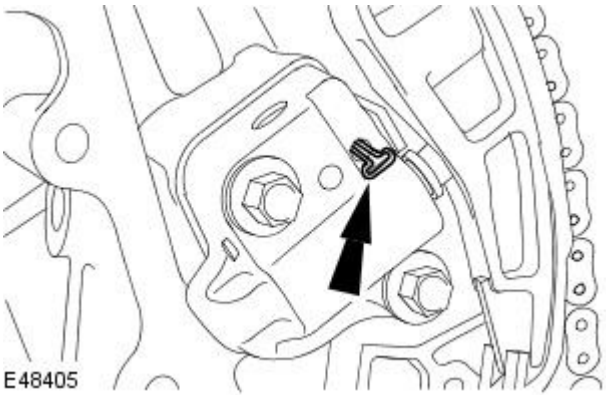


**11.** CAUTION: Do not manually adjust the timing chain tensioner.

Remove the timing chain tensioner retaining pin.

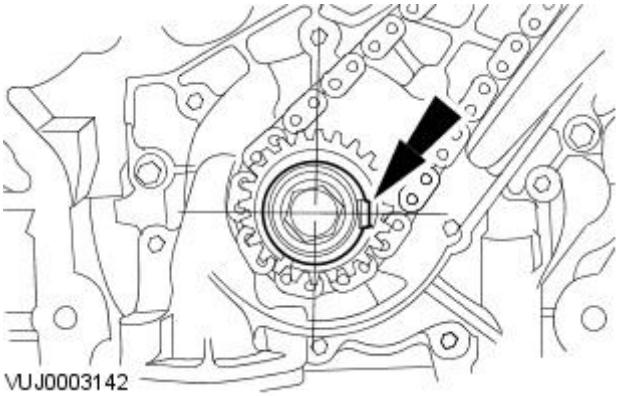


**12.** CAUTION: Do not rotate the crankshaft counterclockwise. The timing chains may bind causing engine damage.

Rotate the crankshaft clockwise until the crankshaft keyway is at the 3 O'clock position.

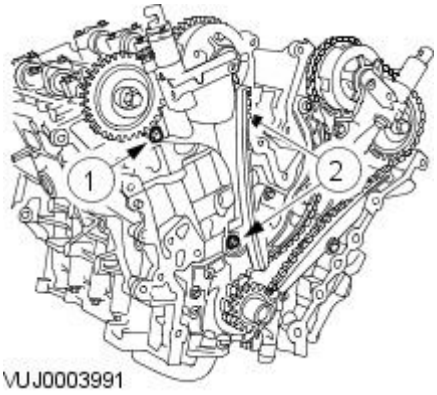


**13.** CAUTIONS:

Inspect and replace the O-ring seal if necessary.

Make sure the O-ring seal is correctly installed.

Install the right-hand timing chain inner guide.

- Tighten the retaining bolts in the sequence shown in two stages.
- Stage 1: Tighten bolt 1 to 25 Nm.
- Stage 2: Tighten bolts 2 to 25 Nm.

GETtheMANUALS.org

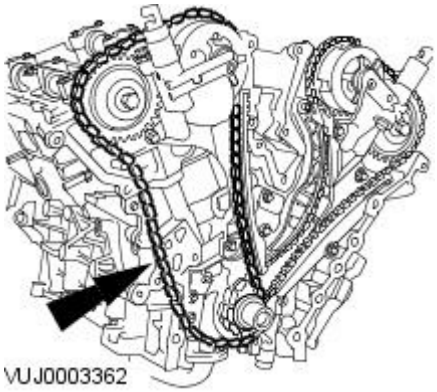


**14.** CAUTIONS:

Make sure the crankshaft keyway is at the 3 O'clock position, the alignment mark on the right-hand intake camshaft sprocket is at the 5 O'clock position and the alignment mark on the right-hand exhaust camshaft sprocket is at the 12 O'clock position.

Make sure the timing chain alignment marks are correctly positioned to the crankshaft sprocket and camshaft sprocket alignment marks.

Make sure the timing chain slack is on the tensioned side of the timing chain.

Install the right-hand timing chain.

**15.** Install the right-hand timing chain outer guide.

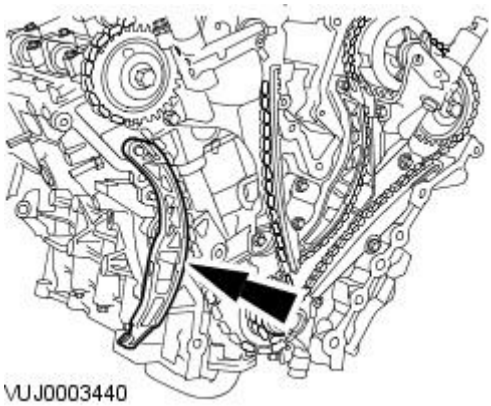


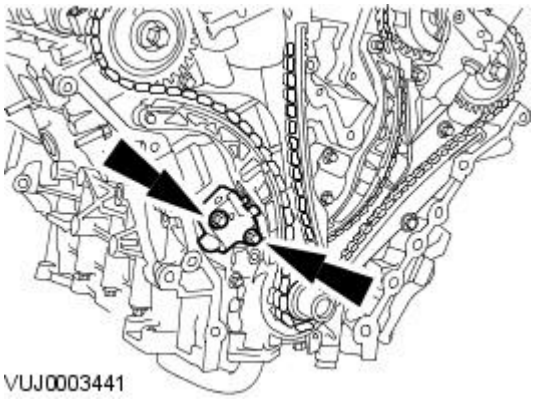


**16.** CAUTION: Do not manually adjust the timing chain tensioner.

Install the right-hand timing chain tensioner.

- Tighten to 25 Nm.

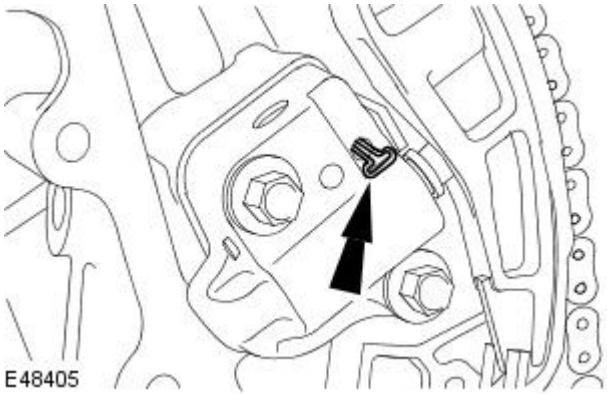


**17.** CAUTION: Do not manually adjust the timing chain tensioner.

Remove the timing chain tensioner retaining pin.

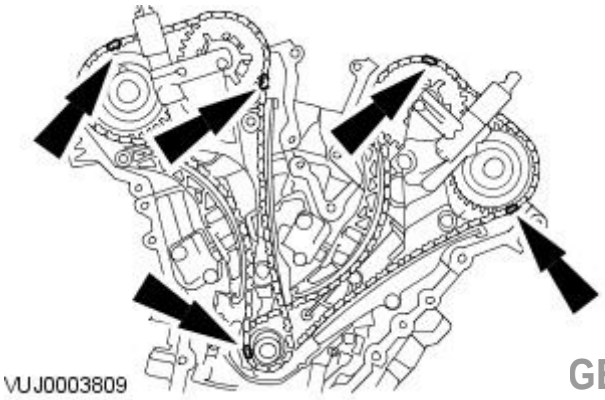


**18.** CAUTIONS:

Make sure the right-hand timing chain alignment marks have remained correctly positioned to the camshaft sprocket and crankshaft sprocket alignment marks.

Do not manually adjust the timing chain tensioner.

Make sure all the timing chain alignment marks are in the positions shown.

GETtheMANUALS.org

**19.** CAUTION: Do not rotate the crankshaft counterclockwise. The timing chains may bind causing engine damage.

• NOTE: Rotate the crankshaft using hand tools only

Rotate the crankshaft two complete turns clockwise to make sure the valves and pistons do not clash.

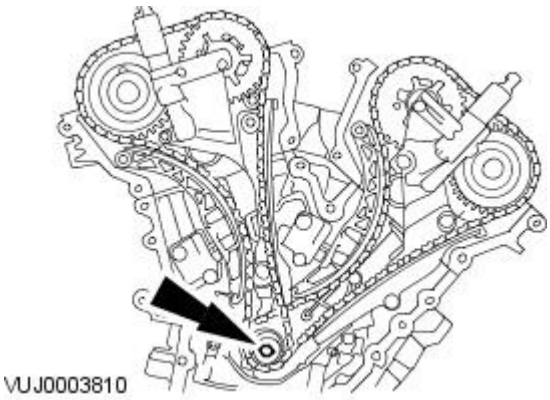


**20.** CAUTION: Do not rotate the crankshaft counterclockwise. The timing chains may bind causing engine damage.

Remove the crankshaft pulley retaining bolt and washer.

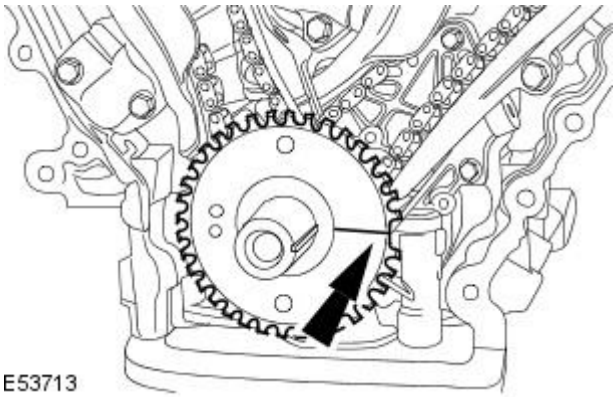


**21.** CAUTIONS:

Make sure the CKP sensor pulse wheel is correctly installed with the missing tooth aligned to the crankshaft keyway.

Make sure the CKP sensor pulse wheel is correctly installed with the teeth pointing outwards.

Install the CKP sensor pulse wheel.

**22.** Install the spark plugs.

- Tighten to 15 Nm.

**23.** Install the engine front cover.
For additional information, refer to: Engine Front Cover (303-01A Engine - 2.5L NA V6 - AJV6/3.0L NA V6 - AJ27, In-vehicle Repair).

GETtheMANUALS.org

# Engine - 2.5L NA V6 - AJV6 / 3.0L NA V6 - AJ27 - Valve Cover LH

In-vehicle Repair

## Removal

1. Remove the left-hand on-plug coils. For additional information, refer to Section 303-07A Engine Ignition / 303-07B Engine Ignition / 303-07C Glow Plug System.
2. Detach the left-hand valve cover wiring harness.

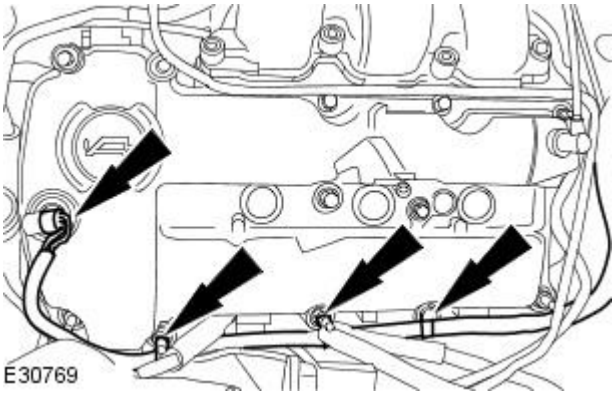


3. Detach the engine breather tube.

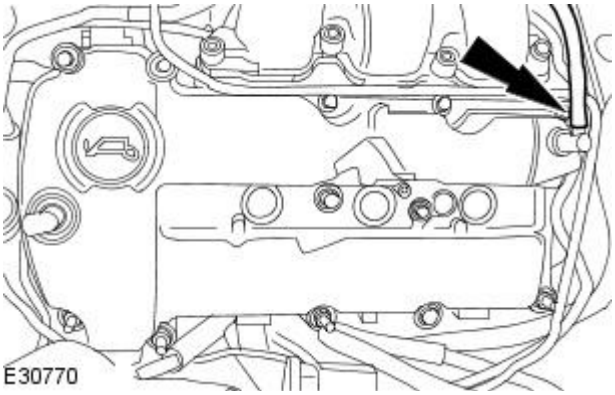


4. Detach the engine wiring harness retaining bracket.

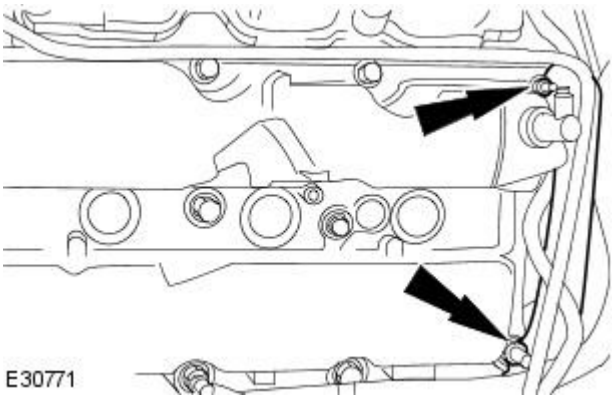


5. Remove the valve cover.

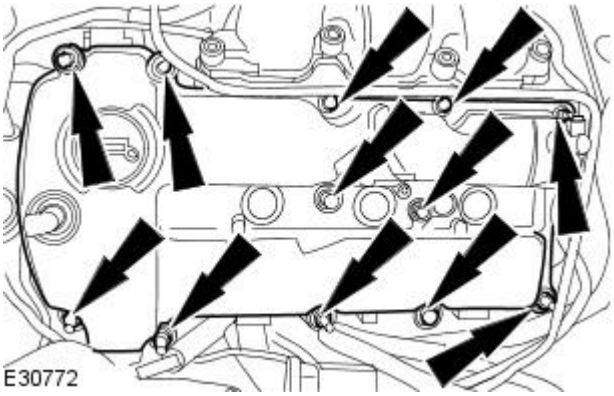


## Installation

GETtheMANUALS.org

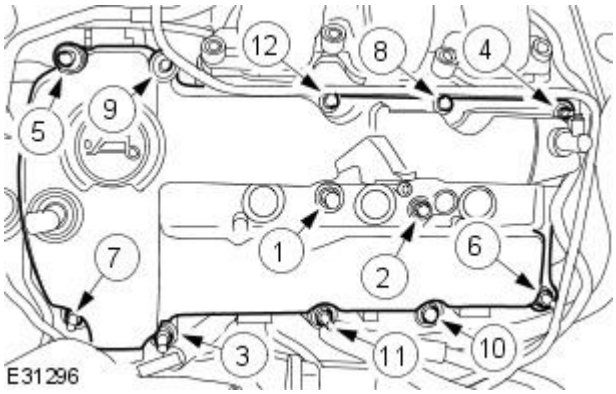


**1.** NOTE: Apply a 5mm diameter bead of silicone gasket sealant or equivalent meeting Jaguar specification on the half round gaskets and apply an 8mm diameter on the two places where the cylinder head and front cover join.

To install, reverse the removal procedure.

- Install new valve cover gaskets.
- Complete the tightening sequence.
- Tighten to 10 Nm.

GETtheMANUALS.org

# Engine - 2.5L NA V6 - AJV6 / 3.0L NA V6 - AJ27 - Valve Cover RH

In-vehicle Repair

## Removal

1. Remove the intake manifold.
   For additional information, refer to Intake Manifold in this section.
2. Remove the right-hand on-plug coils. For additional information, refer to Section 303-07A Engine Ignition / 303-07B Engine Ignition / 303-07C Glow Plug System.
3. Detach the right-hand valve cover wiring harness.

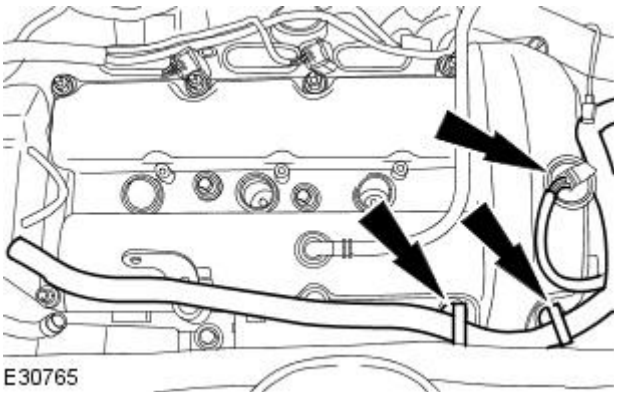


4. Remove the intake manifold rear retaining bracket.

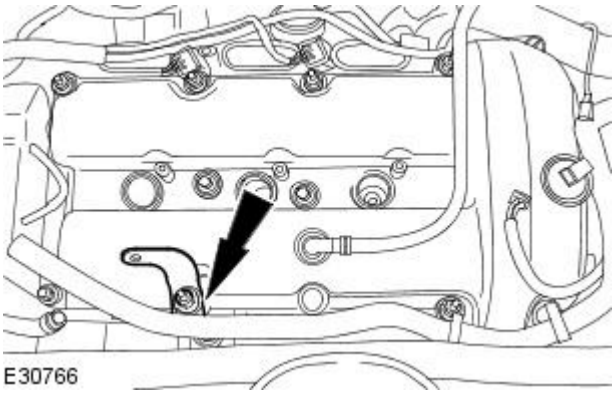


5. Detach the engine wiring harness retaining bracket.

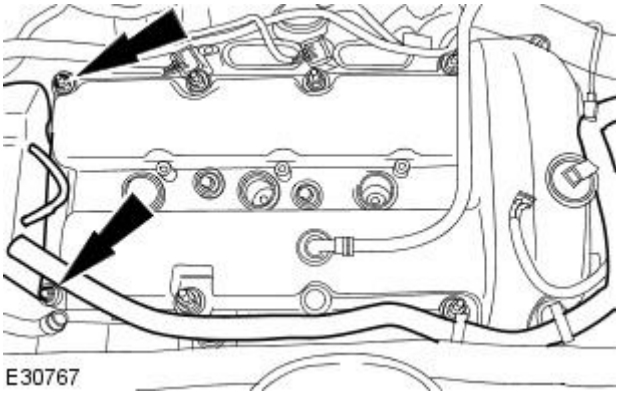


6. Remove the valve cover.

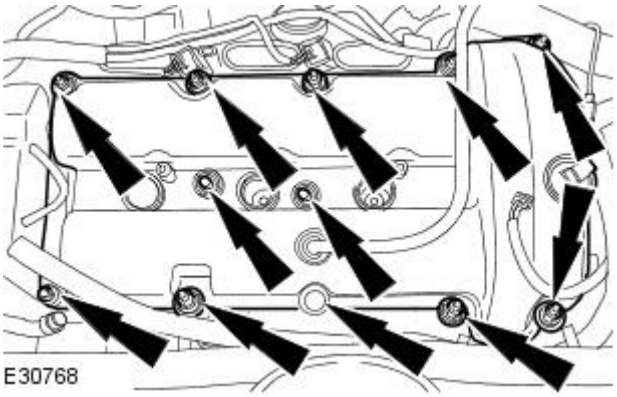


## Installation

GETtheMANUALS.org

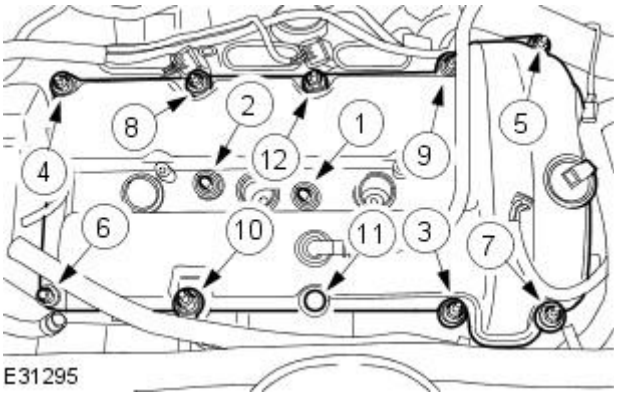


**1.** NOTE: Apply a 5mm diameter bead of silicone gasket sealant or equivalent meeting Jaguar specification on the half round gaskets and apply an 8mm diameter on the two places where the cylinder head and front cover join.

To install, reverse the removal procedure.

- Install new valve cover gaskets.
- Complete the tightening sequence.
- Tighten to 10 Nm.

GETtheMANUALS.org

# Engine - 2.5L NA V6 - AJV6 / 3.0L NA V6 - AJ27 - Engine

Removal

| Special Tool(s) | |
|---|---|
| 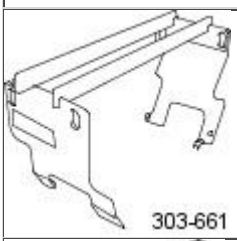 303-661 | Engine lifting Bracket<br><br>303-661 |
| 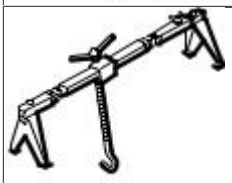 303-021 | Engine Support Bracket<br><br>303-021 |
| 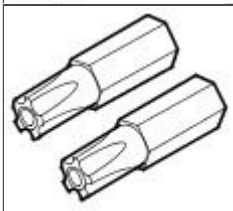 418-535 | 5 point security torx bit<br><br>418-535 |

## Removal

Vehicles with automatic transmission

1. Remove the automatic transmission assembly.
   For additional information, refer to Section 307-01 Automatic Transmission/Transaxle.

Vehicles With Manual Transmission

2. Remove the manual transmission. For additional information, refer to Section 308-03A Manual Transmission/Transaxle / 308-03B Manual Transmission/Transaxle.

All vehicles

3. Lower the vehicle.
4. Carry out the air conditioning recovery procedure.
   For additional information, refer to Section 412-00 Climate Control System - General Information.
5. Remove the cabin air filter.
   For additional information, refer to Section 412-01 Air Distribution and Filtering.
6. Remove the air cleaner assembly. For additional information, refer to Section 303-12A Intake Air Distribution and Filtering / 303-12B Intake Air Distribution and Filtering / 303-12C Intake Air Distribution and Filtering.
7. Remove the engine compartment support.

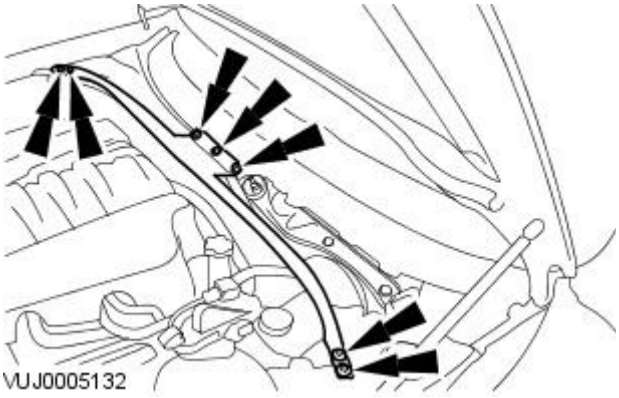


GETtheMANUALS.org

**8.** Remove the cabin air filter housing retaining nut.

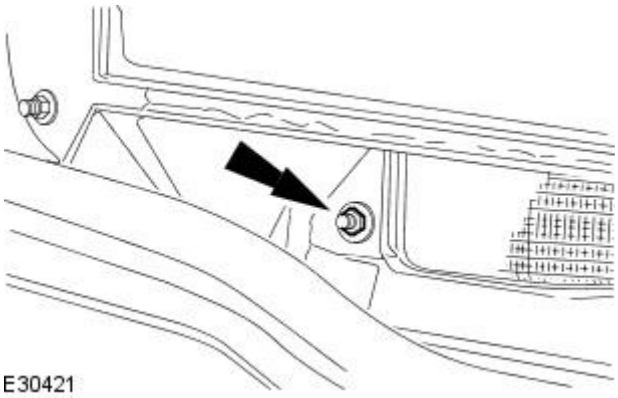


**9.** Remove the cabin air filter housing.

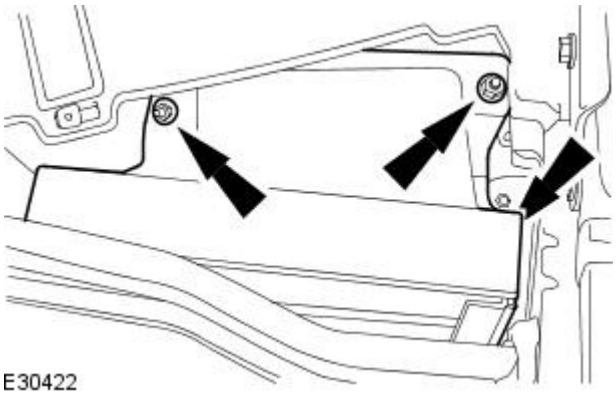


**10.** Remove the engine compartment panel.

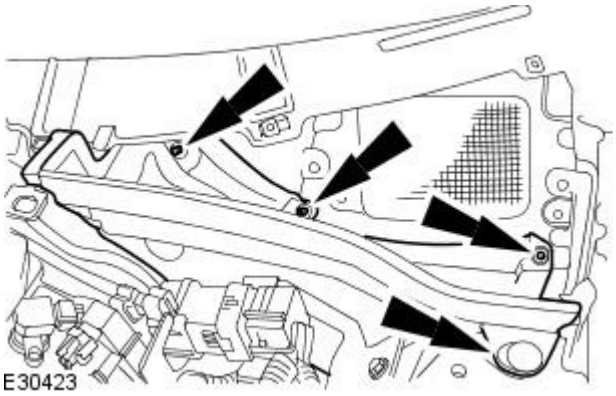


**11.** Raise the vehicle.

**12.** Remove the passenger side front wheel and tire assembly.

**13.** Remove the fender splash shield.

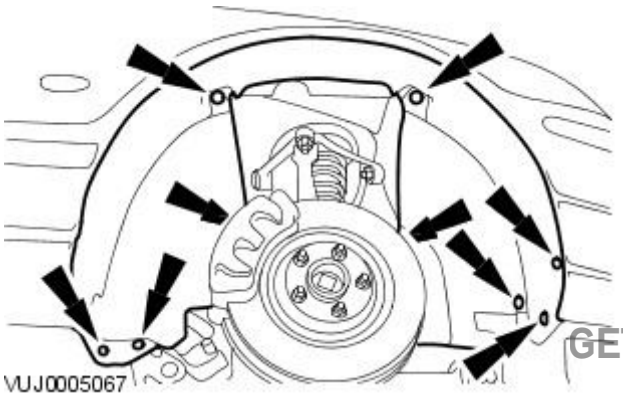


GETtheMANUALS.org

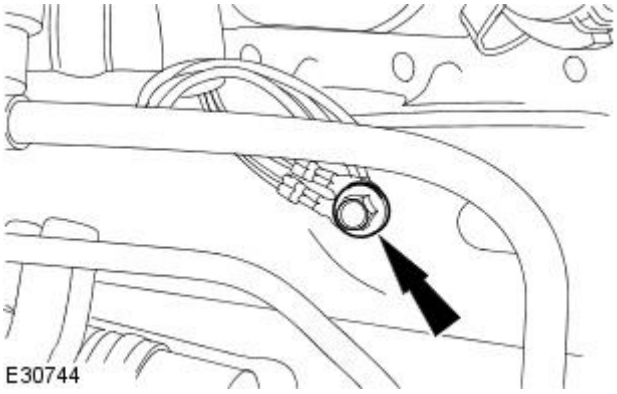


**14.** Disconnect the engine harness ground strap.

**15.** Lower the vehicle

**16.** NOTE: The engine control module (ECM) electrical connector retaining bolt remains captive in the electrical connector

Disconnect the ECM electrical connector.

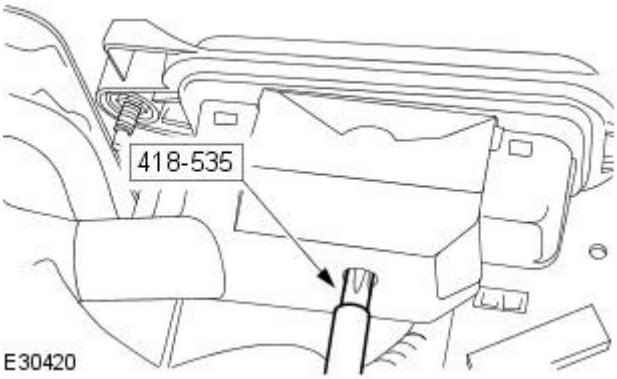


**17.** NOTE: The main engine harness electrical connector retaining bolt remains captive in the electrical connector

Disconnect the engine wiring harness electrical connectors.

1. Loosen the engine harness main electrical connector retaining bolt.
2. Disconnect the engine wiring harness electrical connectors.

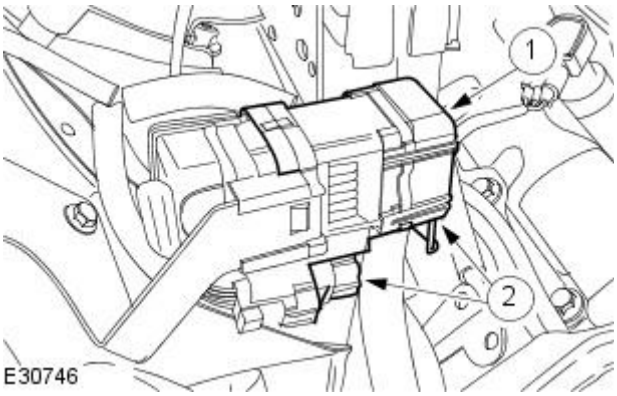


**18.** Reposition the engine wiring harness from the vehicle body.

**19.** Disconnect the evaporative emission canister purge valve to intake manifold hose.

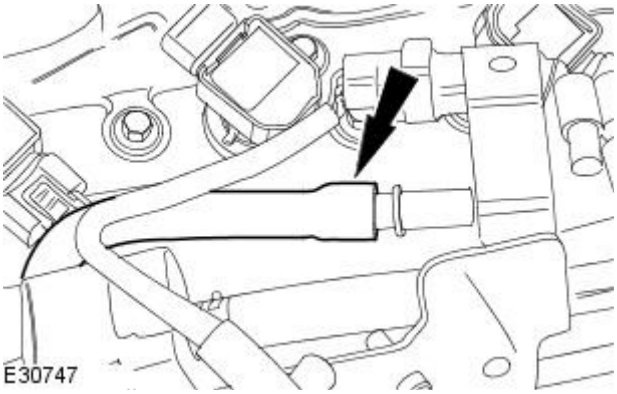


GETtheMANUALS.org

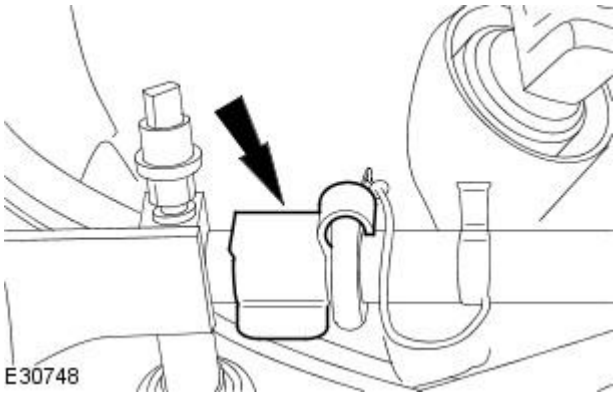


**20.** Disconnect the fuel supply manifold spring lock coupling.
For additional information, refer to Section 310-00 Fuel System - General Information.

**21.** Remove the cooling module. For additional information, refer to Section 303-03A Engine Cooling / 303-03B Supercharger Cooling / 303-03C Engine Cooling.

**22.** Detach the ground cable.

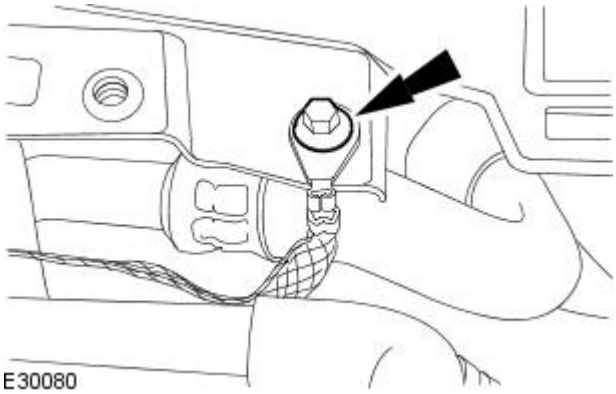


**23.** NOTE: Brake booster vacuum hose is attached to the induction manifold by a quick release coupling.

Detach the brake booster vacuum hose from the induction manifold.

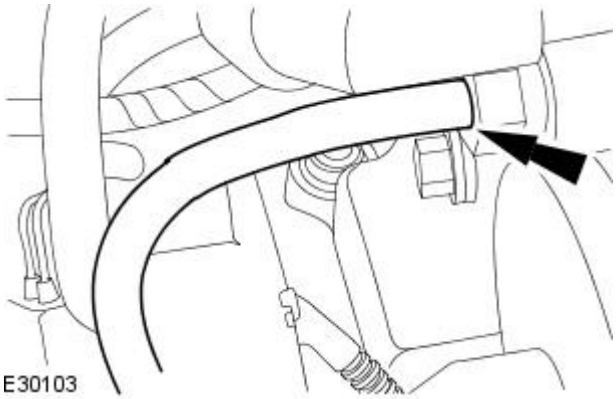


**24.** CAUTIONS:

Cap the power steering line to prevent loses of fluid and dirt ingress.

If power steering fluid comes into contact with the paintwork, the affected area must be immediately washed down with cold water.

- NOTE: Drain the fluid into a suitable container.

Disconnect the power steering reservoir to power steering pump supply line.

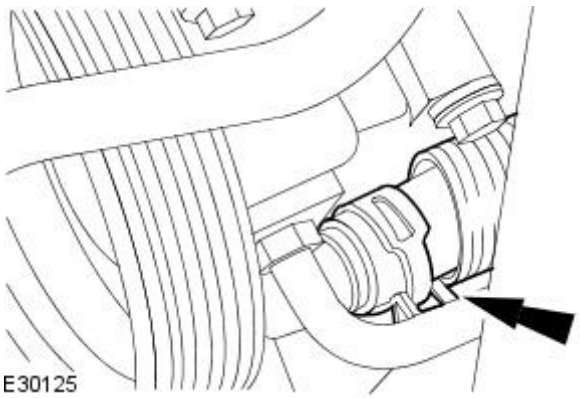


GETtheMANUALS.org

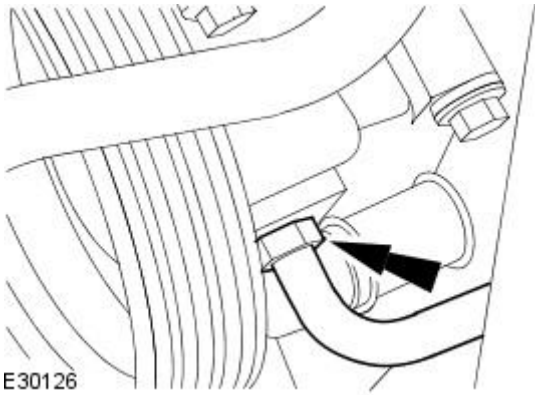


**25.** CAUTIONS:

Cap the power steering lines to prevent loses of fluid and dirt ingress.

If power steering fluid comes into contact with the paintwork, the affected area must be immediately washed down with cold water.

• NOTE: Drain the fluid into a suitable container.

Disconnect the power steering pump to steering gear suppy line.

- Remove and discard the O-ring seal.

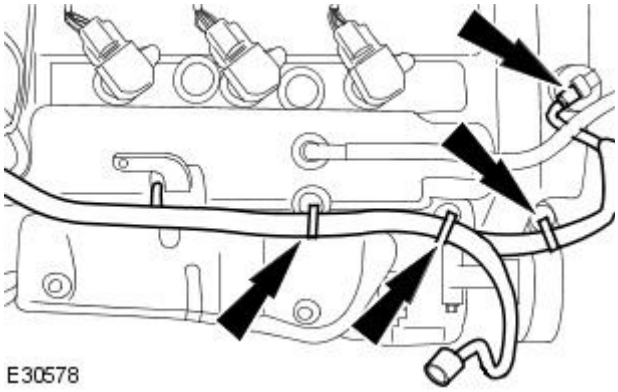


**26.** Detach the right-hand valve cover wiring harness.

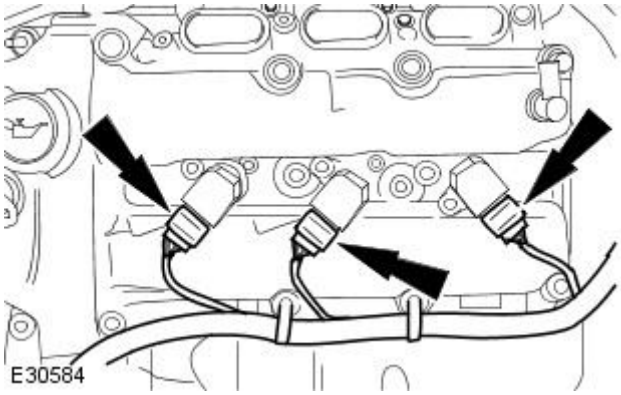


**27.** Disconnect the left-hand ignition coils electrical connectors.

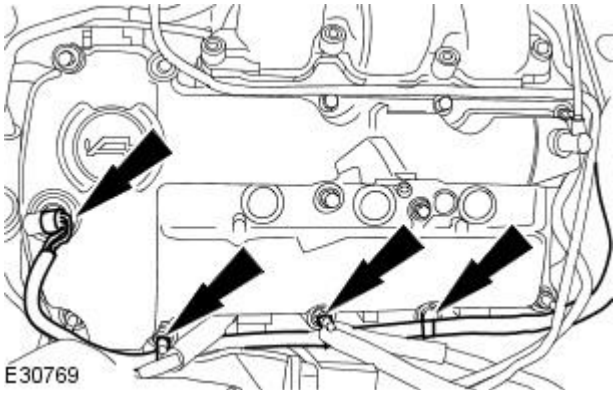


**28.** Detach the left-hand valve cover wiring harness.

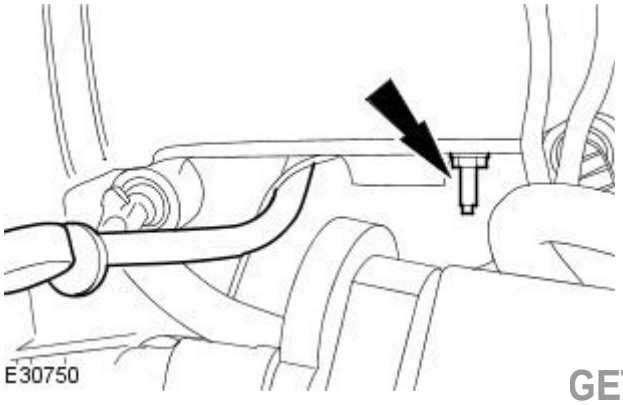


**29.** Remove the dipstick tube retaining bolt.

- Reposition the dipstick tube.

GETtheMANUALS.org

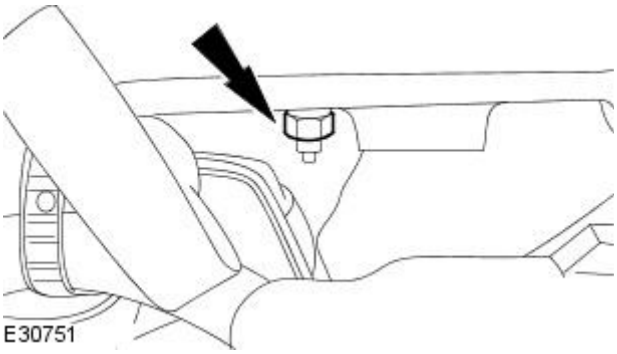


**30.** NOTE: Left-hand shown, Right-hand similar.

Loosen the exhaust manifold retaining nut.

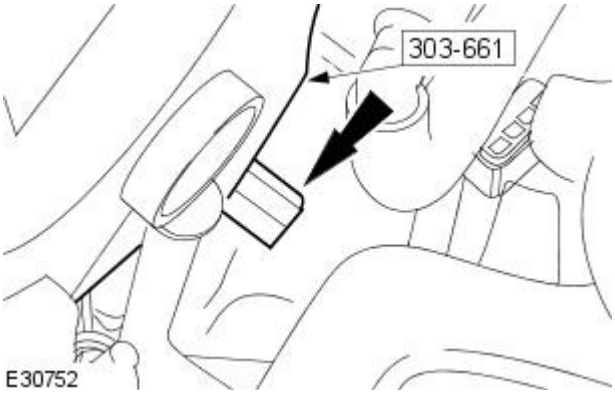


**31.** NOTE: Left-hand shown, Right-hand similar.

Install the special tool to the exhaust mainfold.

- Install the retaining bolt.

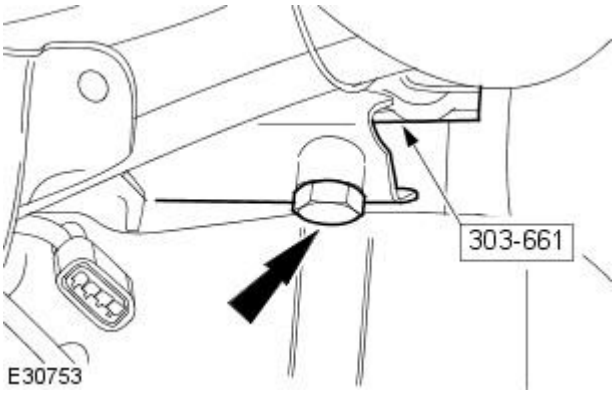


**32.** NOTE: Left-hand shown, Right-hand similar.

Install the retaining bolt.

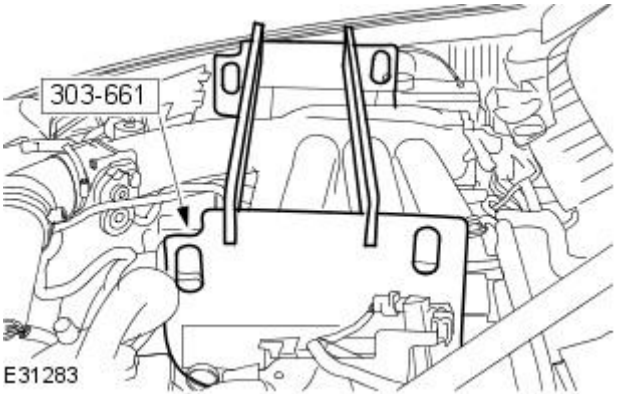


**33.** Install the special tool support bars to the special tool.

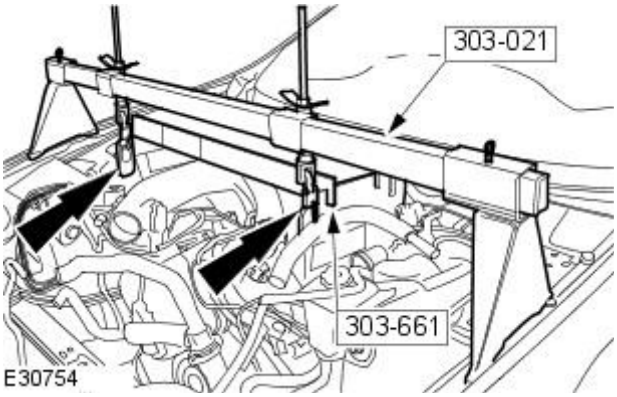


**34.** Install the special tool.

GETtheMANUALS.org

**35.** Raise the vehicle.

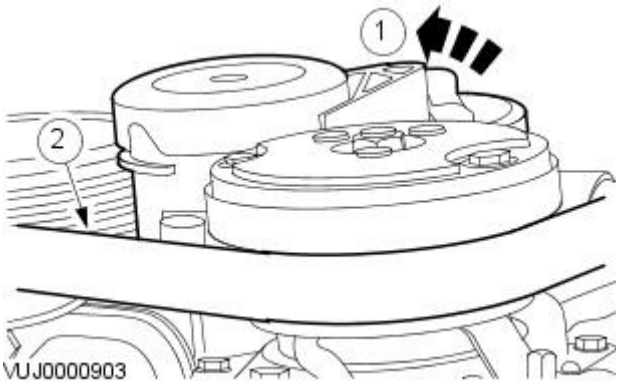


**36.** Detach the accessory drive belt.

1. Rotate the accessory drive belt tensioner counter-clockwise.
   1. Use a 3/8 inch square drive bar to rotate the accessory drive belt tensioner.
2. Detach the accessory drive belt.

**37.** Detach the generator battery positive cable protective cover.

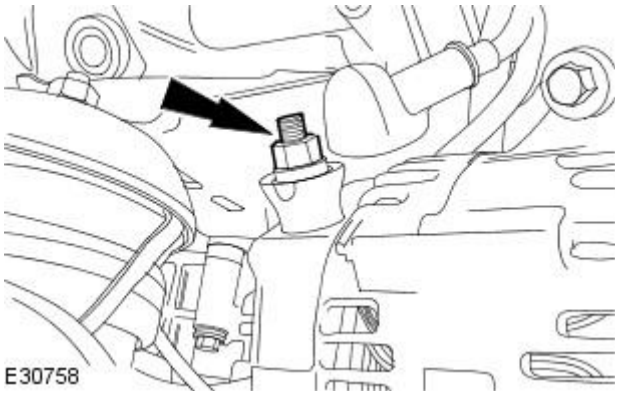


**38.** Remove the battery positive cable retaining nut.

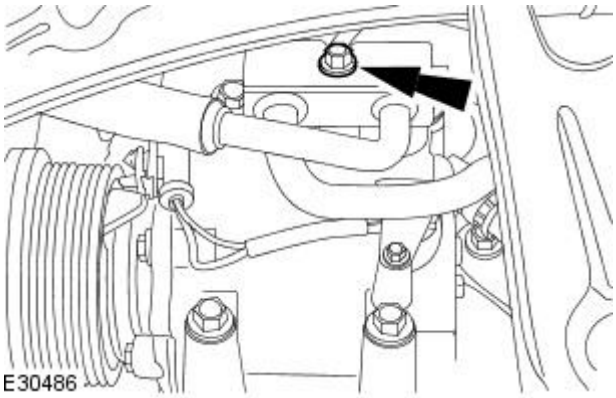


**39.** Disconnect the A/C compressor supply and return lines.

- Remove and discard the A/C compressor O-ring seals.
- Cap the exposed ports.

**40.** Reposition the A/C compressor supply and return lines away from the engine.

GETtheMANUALS.org

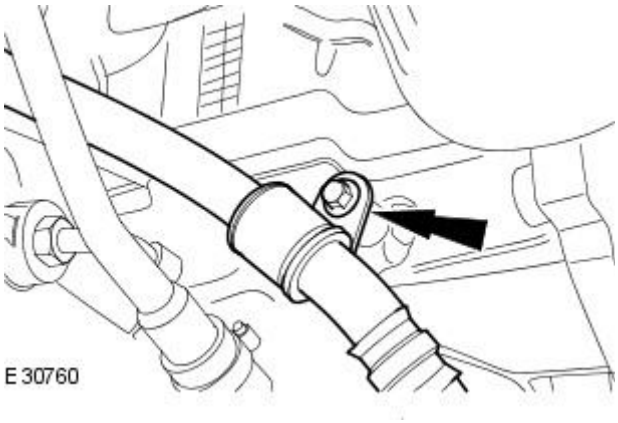


**41.** Detach the power steering hose.

**42.** Reposition the power steering hose away from the engine.

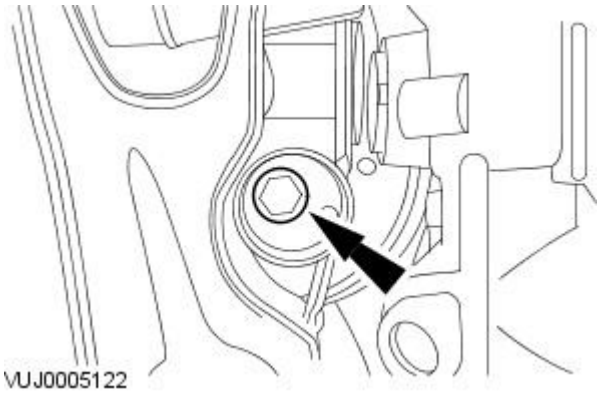


**43.** NOTE: Left-hand engine mount lower retaining bolt shown, right-hand similar.

Remove the engine mounts lower retaining bolts.

Vehicles With Automatic Transmission

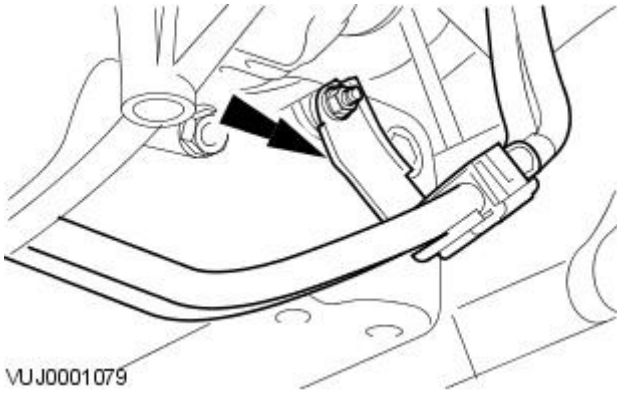


**44.** Detach the automatic transmission oil cooler tubes bracket.

**45.** Reposition the automatic transmission oil cooler tubes away from the engine.

**46.** Detach the automatic transmission wiring harness.

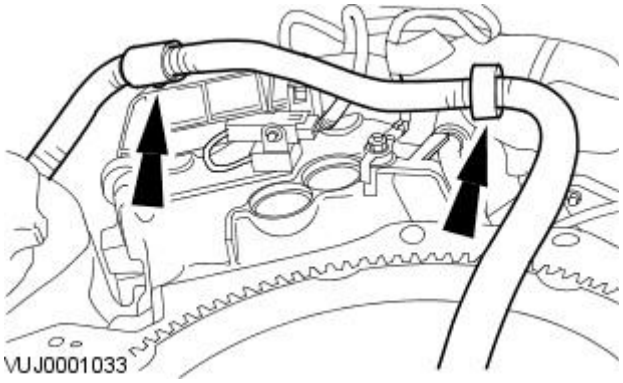


**47.** Reposition the automatic transmission wiring harness away from the engine.

All Vehicles

**48.** Lower the vehicle.

GETtheMANUALS.org

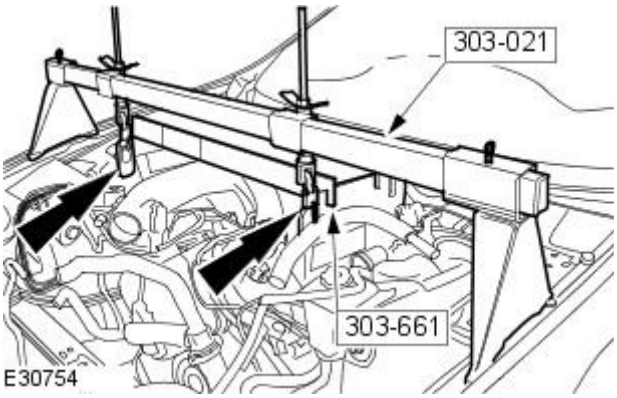


**49.** Remove the special tool.

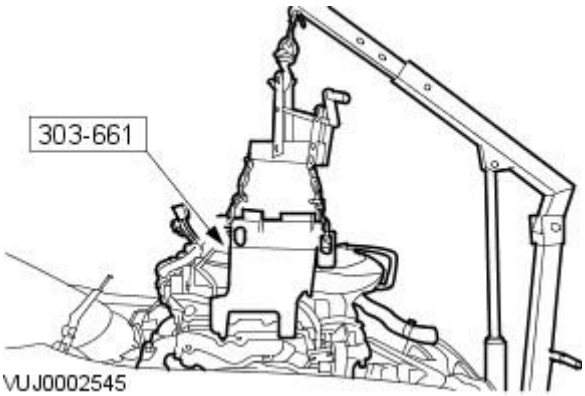


**50.** Remove the engine assembly.

- Using the special tools, install a suitable floor crane.

GETtheMANUALS.org

# Engine - 2.5L NA V6 - AJV6 / 3.0L NA V6 - AJ27 - Engine

Disassembly

| Special Tool(s) | |
|---|---|
| 303D055 | Wrench strap-universal<br>303-D055 |
| 303D121 | Crankshaft Pulley Remover<br>303-D121 |
| 303102 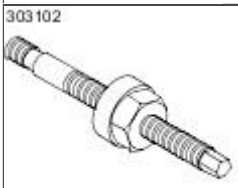 303102 | Crankshaft Pulley Installer<br>303-102 |
| 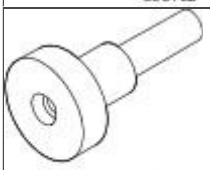 303D12101 | Trust Pad<br>303-D121-01 |
| 303-335/2 | Crankshaft pulley installer<br>303-335/2 |

## Disassembly

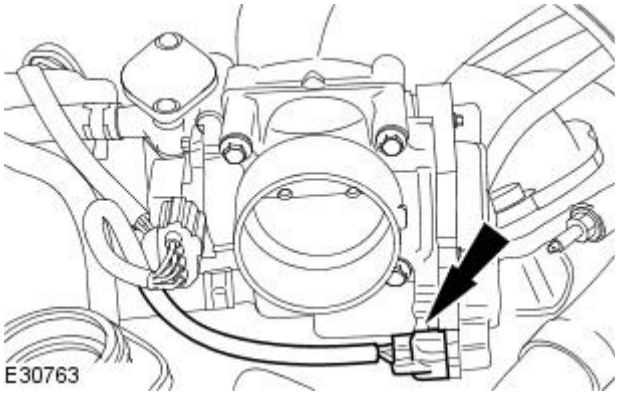


**1.** Disconnect the throttle motor electrical connector.

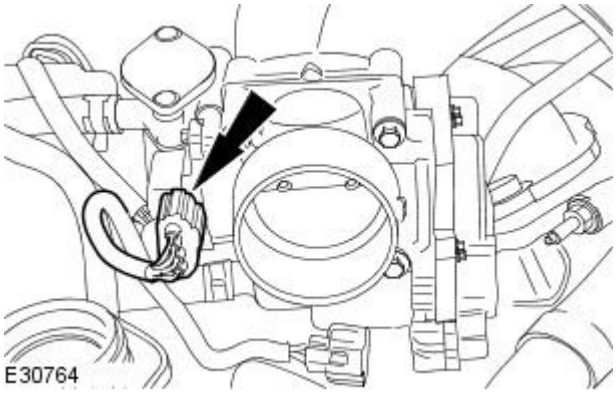


**2.** Disconnect the throttle position sensor.

GETtheMANUALS.org

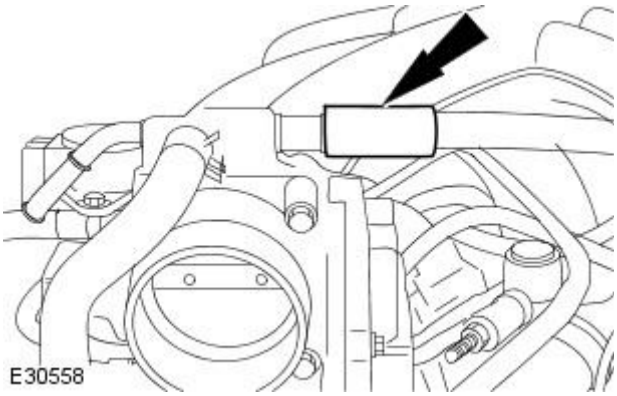


**3.** Disconnect the positive crankcase ventilation (PCV) hose.

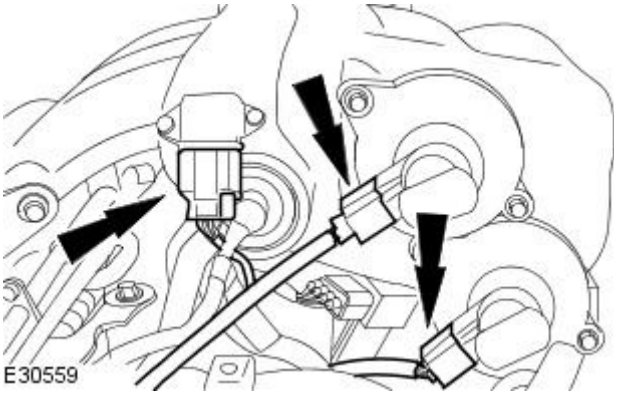


**4.** Disconnect the electrical connectors.

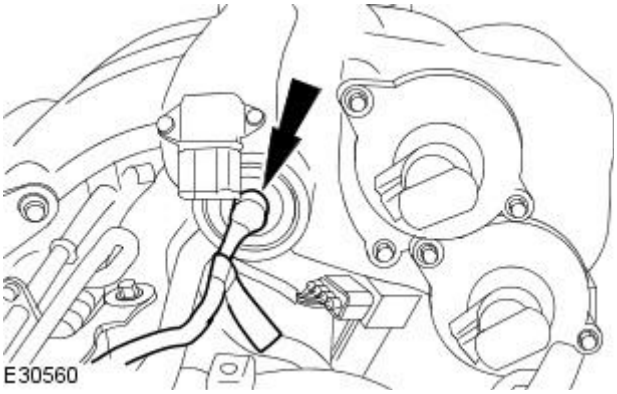


**5.** Disconnect the fuel pressure regulator vacuum hose.

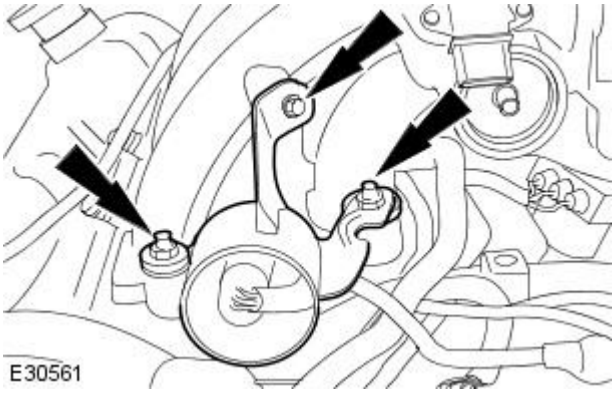


**6.** Remove the fuel pressure regulator bracket.

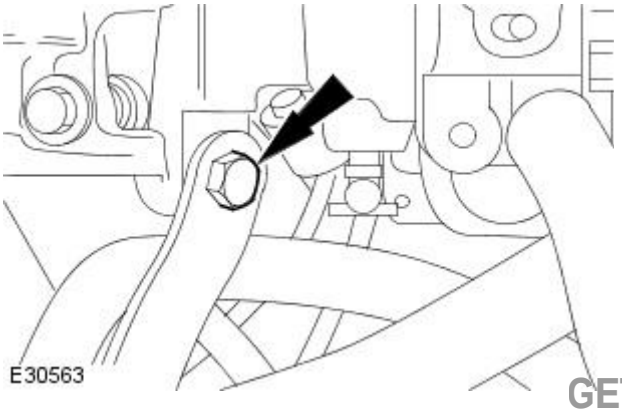


**7.** Detach the intake manifold front retaining bracket.

GETtheMANUALS.org

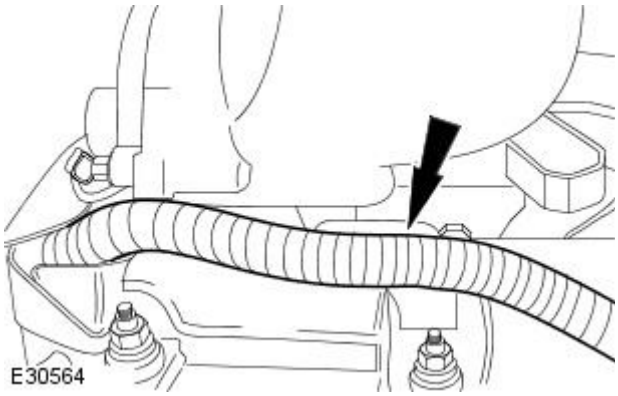


**8.** Detach the engine wiring harness from the intake manifold rear retaining bracket.

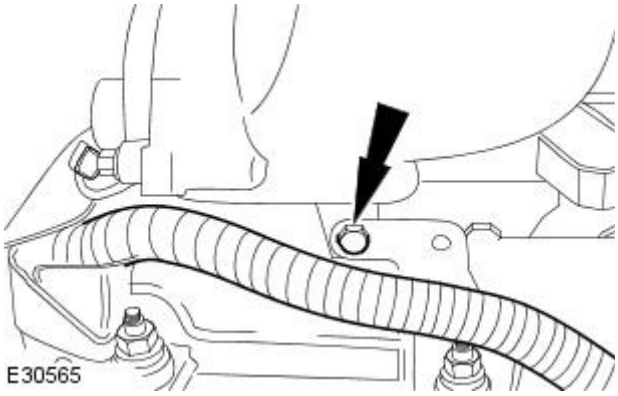


**9.** Detach the intake manifold rear retaining bracket.

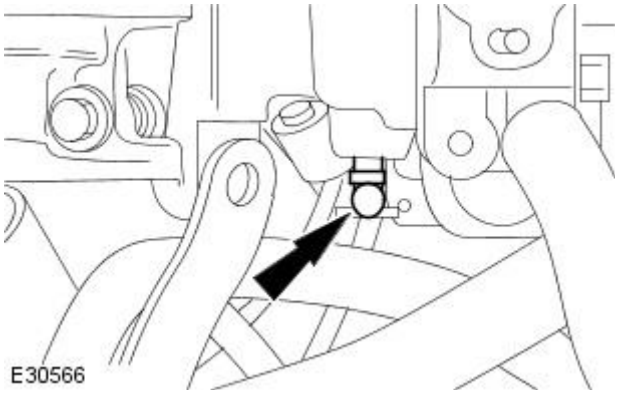


**10.** NOTE: The evaporative emission canister purge valve transfer pipe is attached to the induction manifold by a quick release coupling.

Disconnect the evaporative emission canister purge valve transfer pipe.

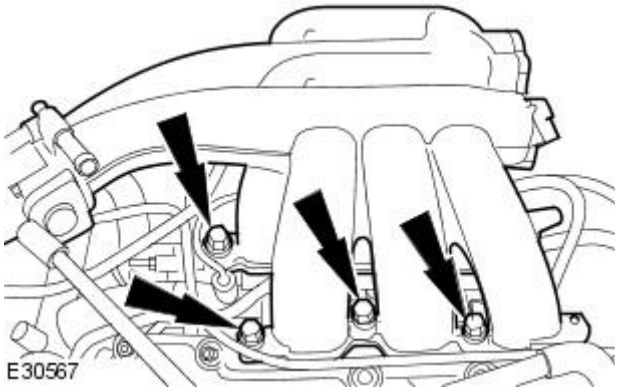


**11.** Remove the intake manifold.

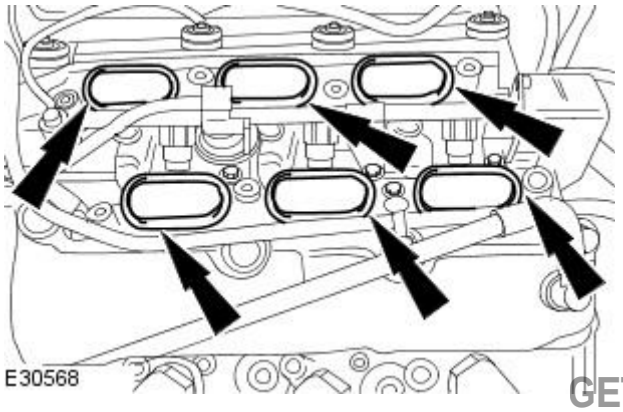


**12.** Remove and discard the intake manifold gaskets.

GETtheMANUALS.org

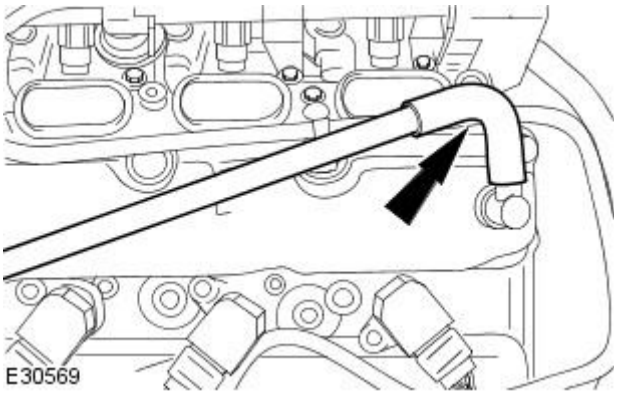


**13.** Remove the engine breather hose.

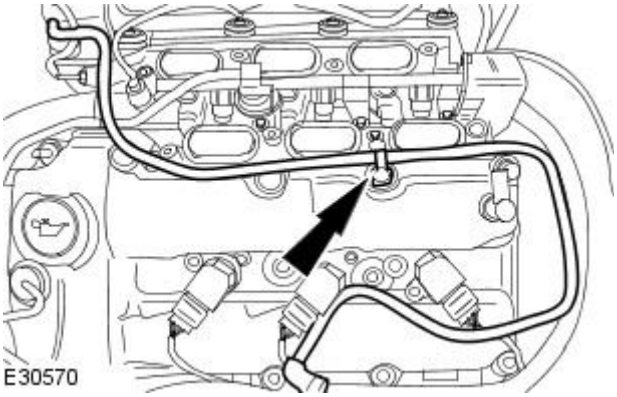


**14.** Remove the evaporative emission purge valve hose.

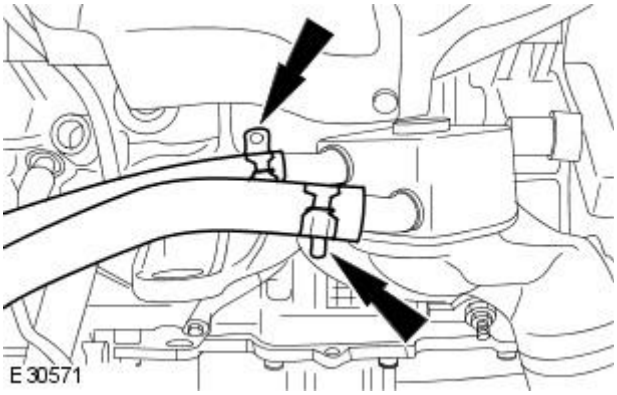


**15.** Disconnect the oil cooler coolant hoses.

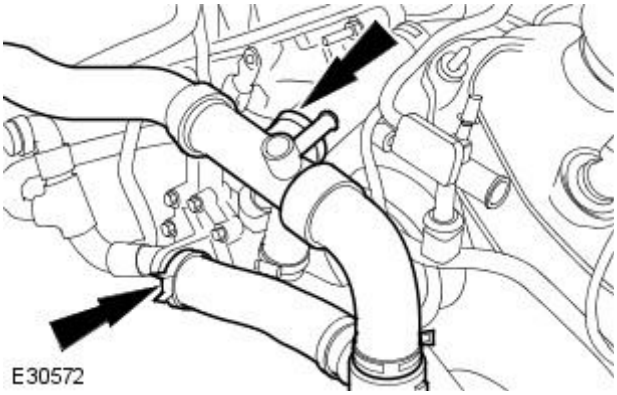


**16.** Remove the coolant hose.

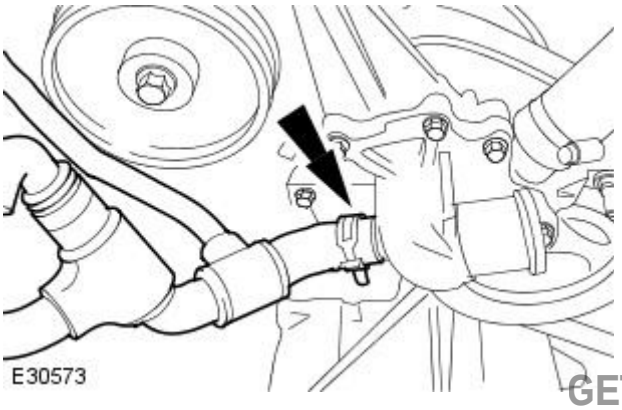


**17.** Remove the coolant hose.

GETtheMANUALS.org

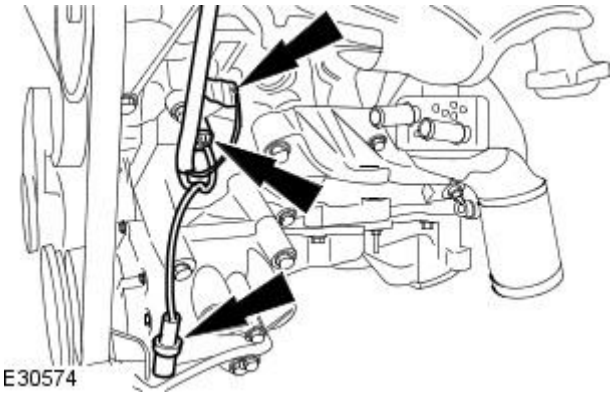


**18.** Disconnect the electrical connectors.

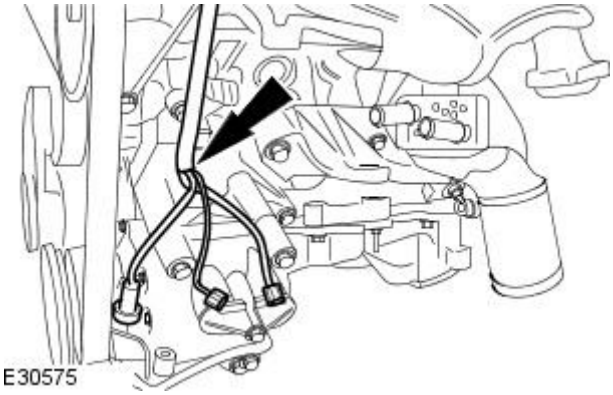


**19.** Detach the engine harness.

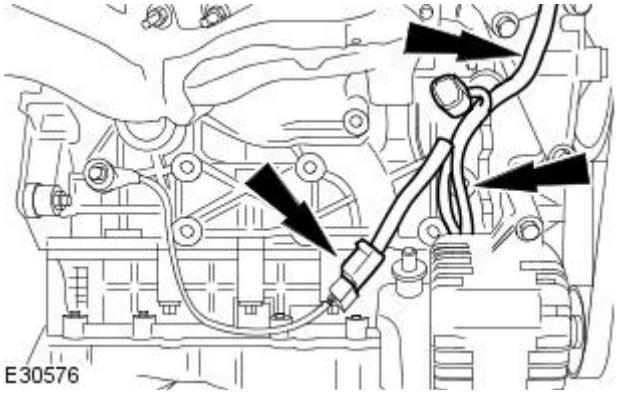


**20.** Detach engine harness.

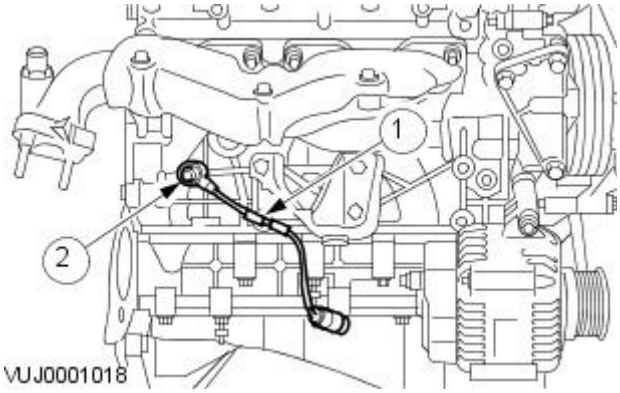


**21.** Remove the rear knock sensor.

1. Detach the knock sensor wiring harness.
2. Remove the rear knock sensor.

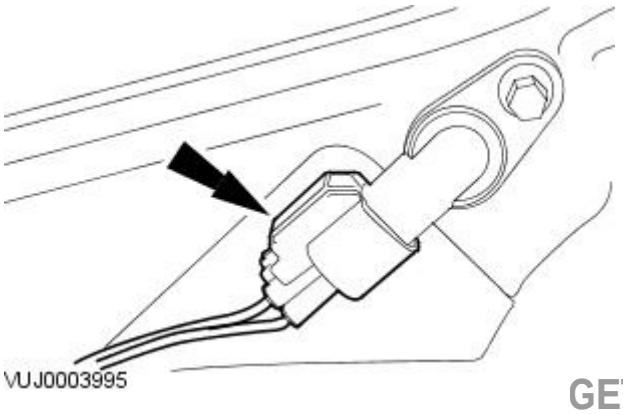


**22.** Disconnect the right-hand camshaft position sensor.

GETtheMANUALS.org

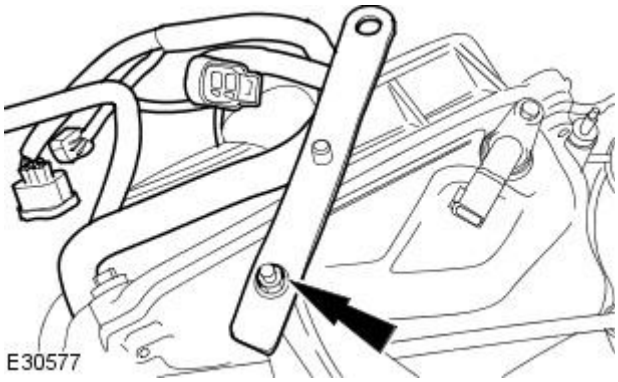


**23.** Detach the engine harness retaining bracket.

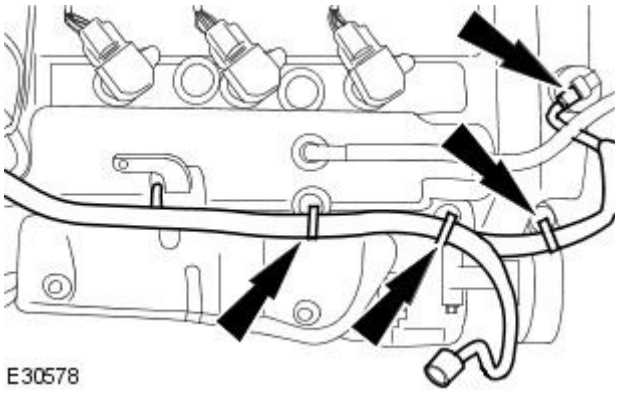


**24.** Detach the engine harness.

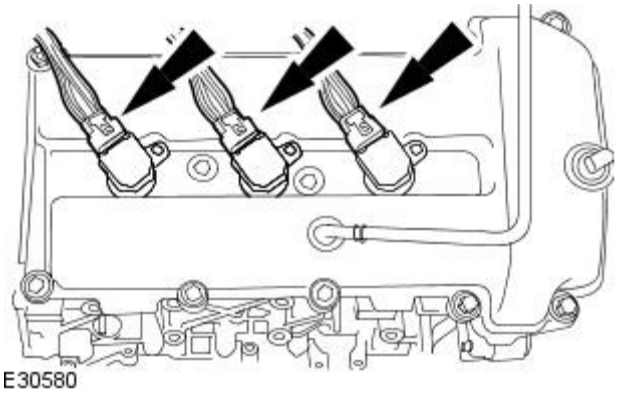


**25.** Disconnect the right-hand ignition coils.

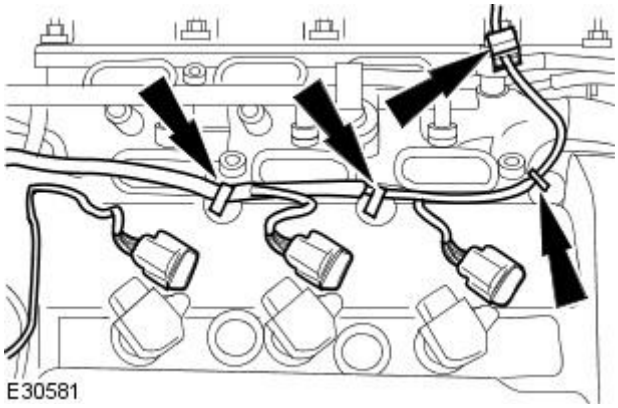


**26.** Detach the engine harness.

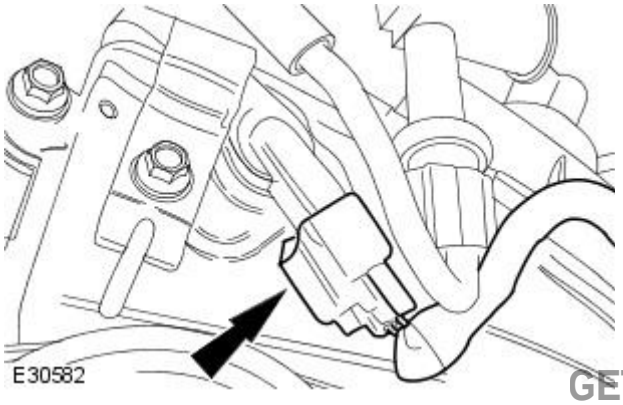


**27.** Disconnect the left-hand camshaft position sensor.

GETtheMANUALS.org

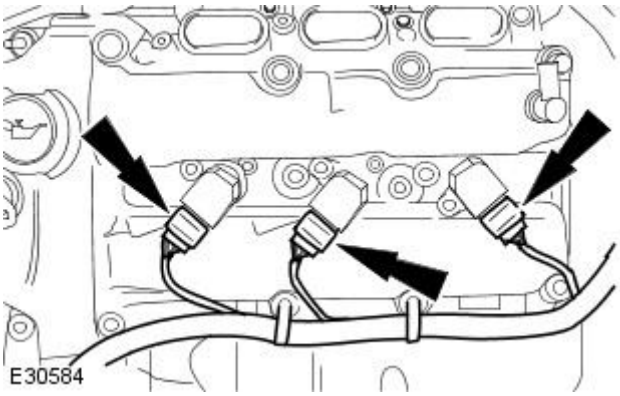


**28.** Disconnect the left-hand ignition coils.

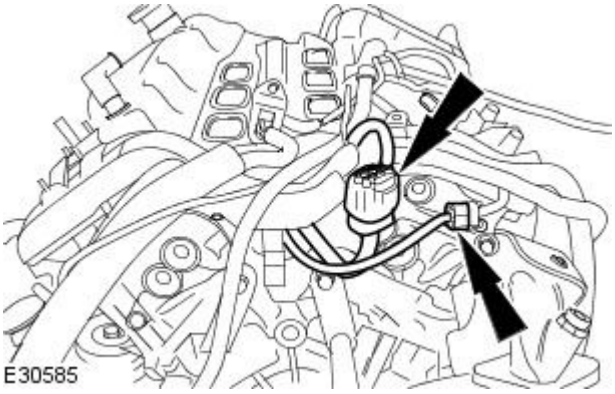


**29.** Disconnect the engine wiring harness electrical connectors.

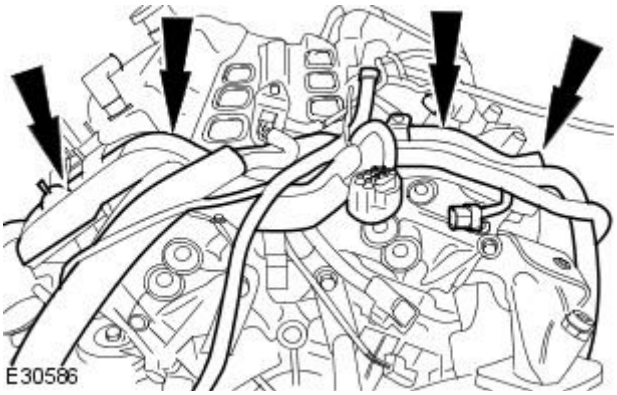


**30.** Remove the engine wiring harness.

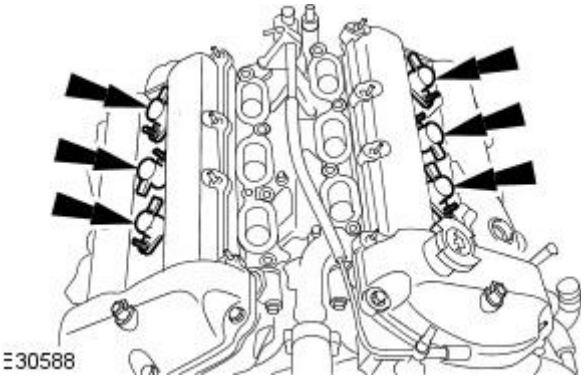


**31.** Remove the ignition coils.

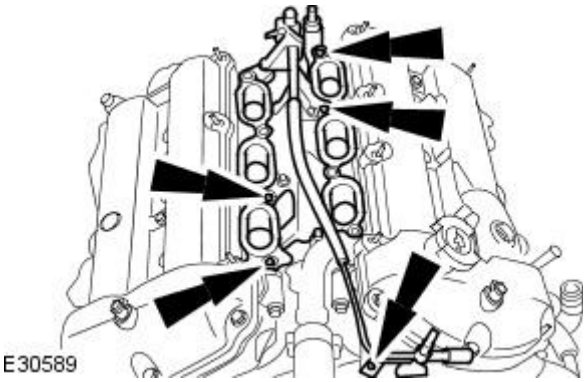


**32.** Remove the lower intake manifold and injector supply manifold.

GETtheMANUALS.org

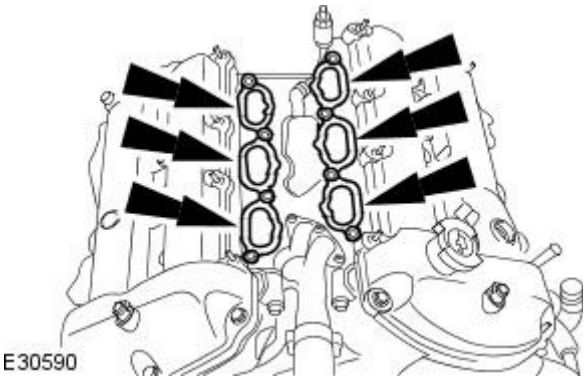


**33.** Remove and discard the lower intake manifold gaskets.

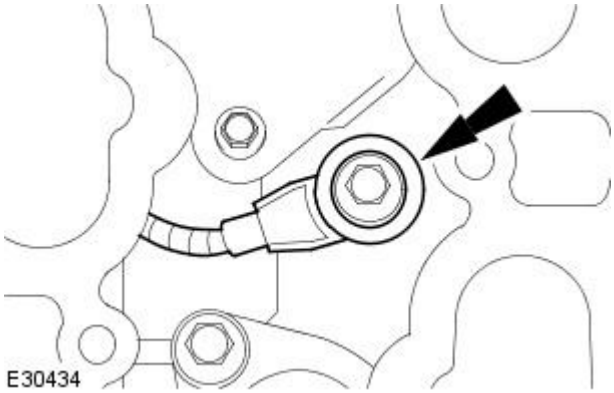


**34.** Remove the left-hand knock sensor.

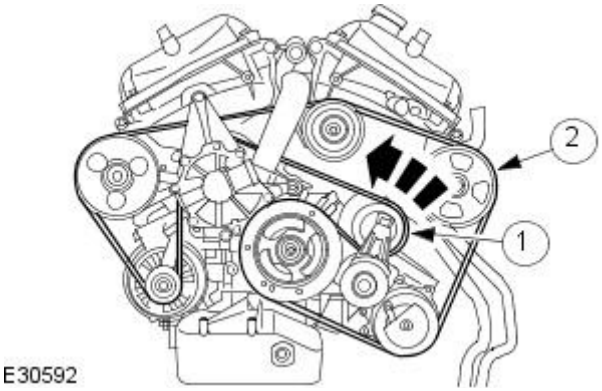


**35.** Remove the accessory drive belt.

1. Use a 3/8 inch drive bar to release the accessory drive belt tensioner.
2. Remove the accessory drive belt.

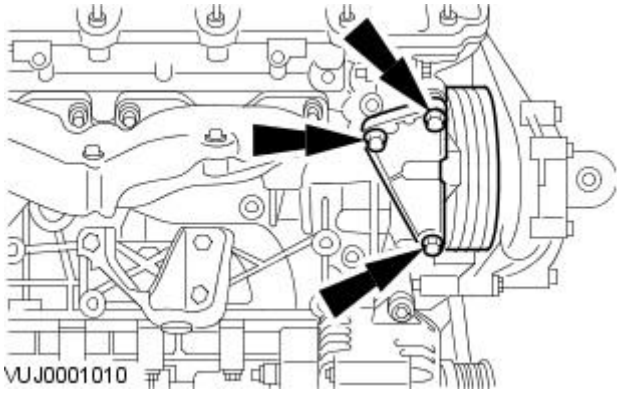


**36.** Remove the right-hand idler pulley.

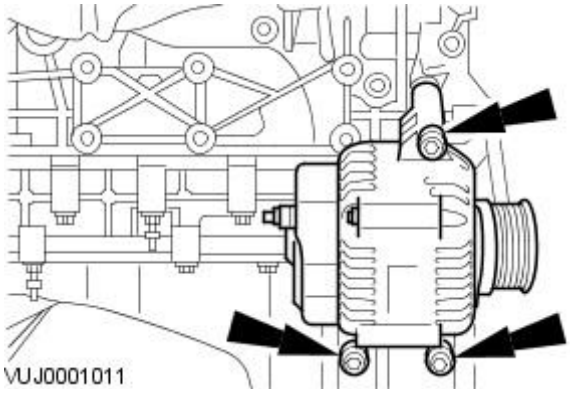


**37.** Remove the generator.

GETtheMANUALS.org

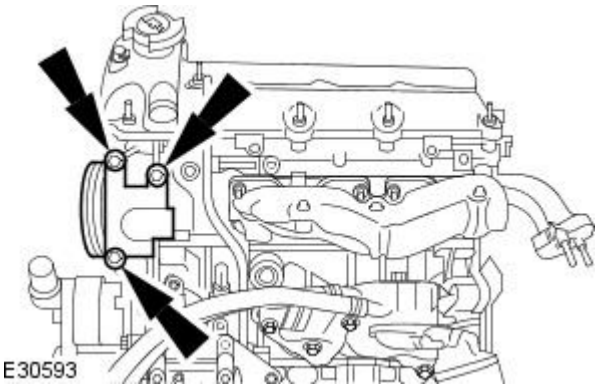


**38.** Remove the power steering pump.

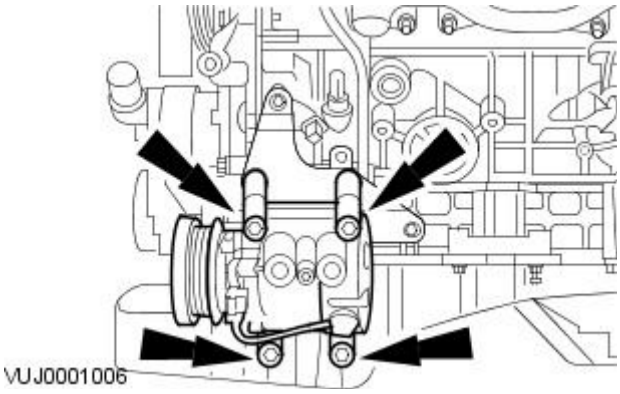


**39.** Remove the air conditioning (A/C) compressor.

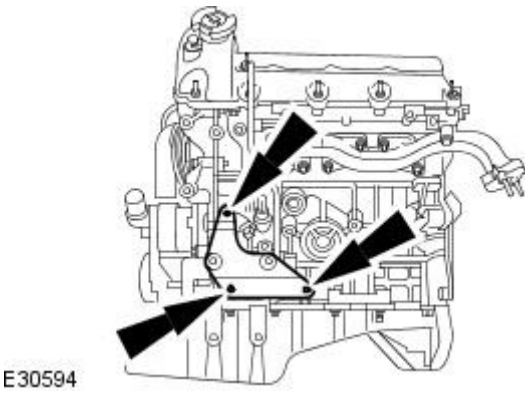


**40.** Remove the A/C compressor mounting bracket.

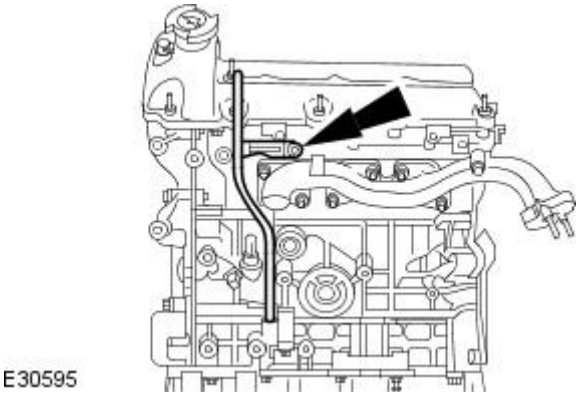


**41.** Remove the oil level indicator tube.

1. Remove and discard the O-ring seal.

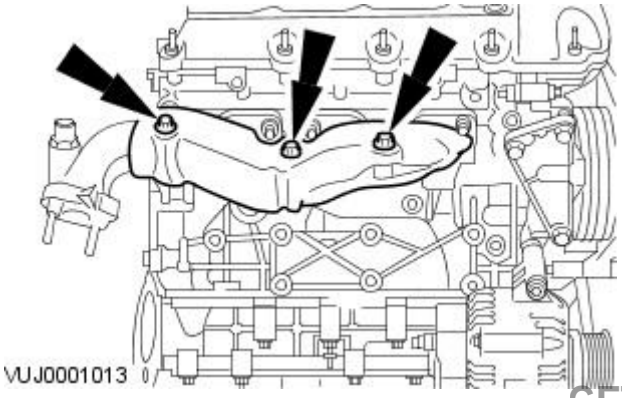


**42.** NOTE: Right-hand shown, Left-hand similar.

Remove the exhaust manifold heat shields.

GETtheMANUALS.org

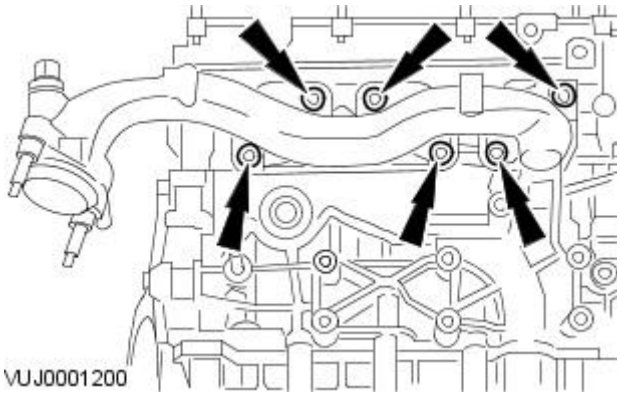


**43.** NOTE: Right-hand shown, Left-hand similar.

Remove the exhaust manifolds.

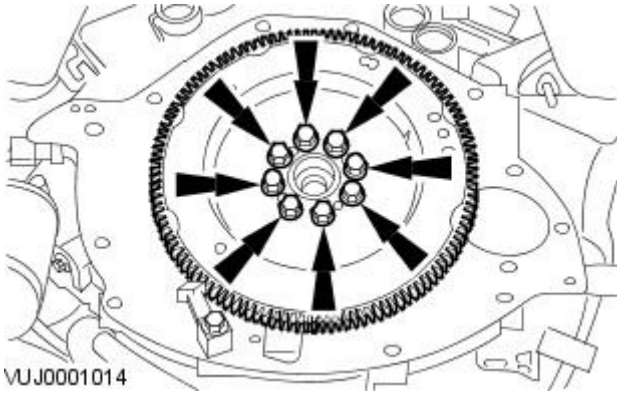


**44.** Remove the flywheel.

- Prevent the engine from rotating.

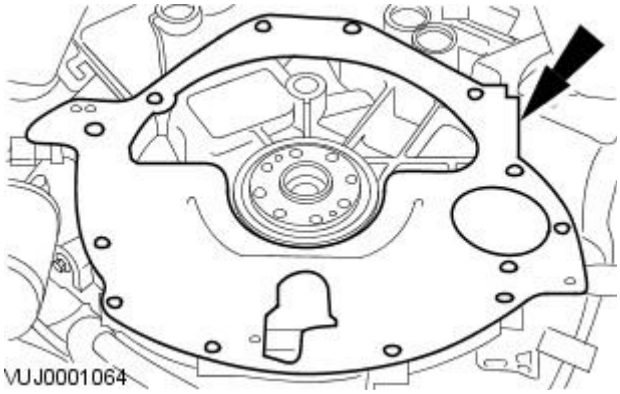


**45.** Remove the engine rear backing plate.

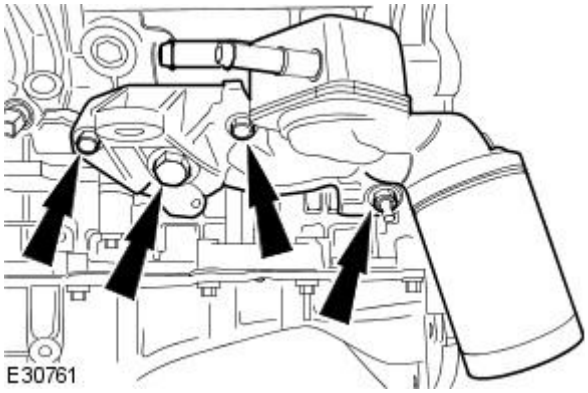


**46.** Remove the oil filter housing assembly.

- Remove and discard the O-ring seal.

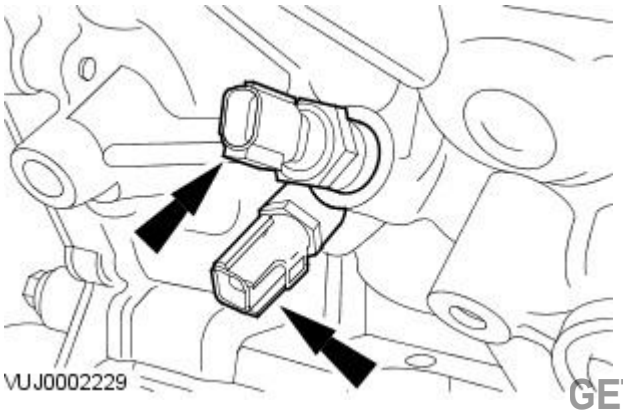


**47.** Remove the engine oil pressure and oil temperature sensors.

GETtheMANUALS.org

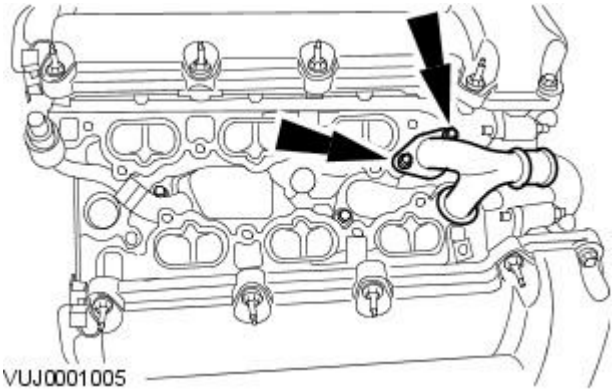


**48.** Remove the coolant crossover tube.

- Remove and discard the O-ring seals.

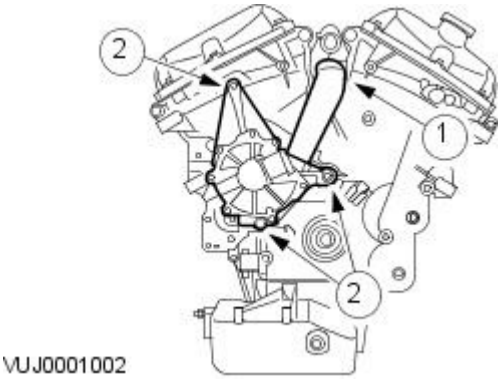


**49.** Remove the water pump and coolant hose assembly.

1. Detach the hose.
2. Remove the water pump and coolant hose assembly.

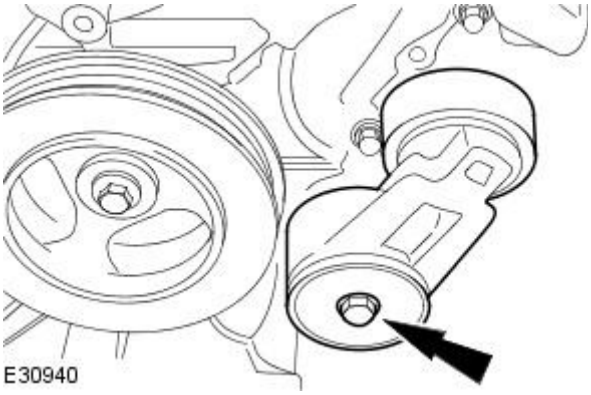


**50.** Remove the accessory drive belt tensioner.

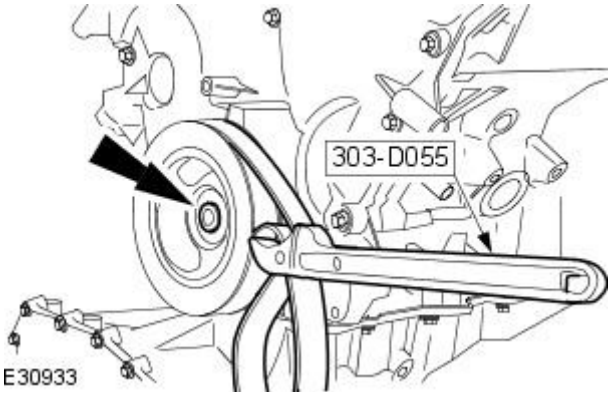


**51.** Install the special tool, loosen the crankshaft pulley retaining bolt.

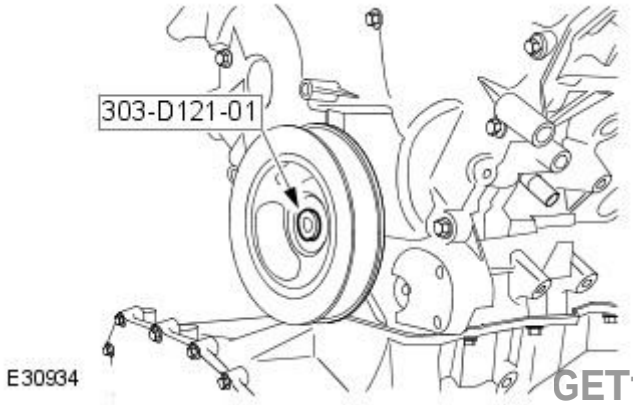


**52.** Install the special tool.

GETtheMANUALS.org

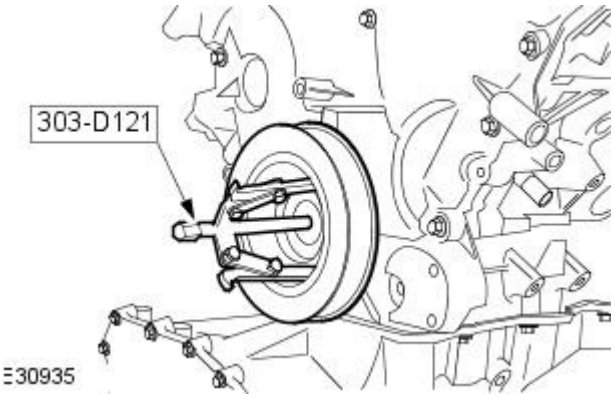


**53.** Using the special tool, remove the crankshaft vibration damper.

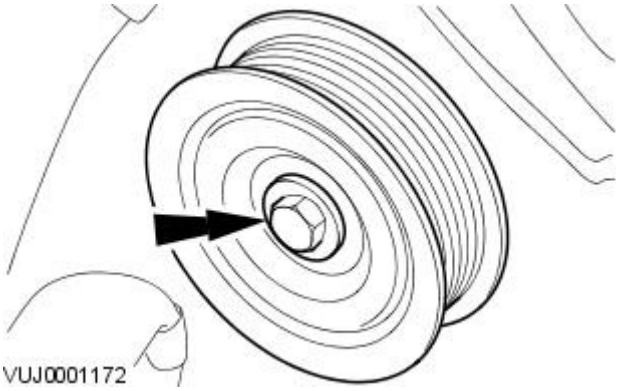


**54.** Remove the left-hand idler pulley.

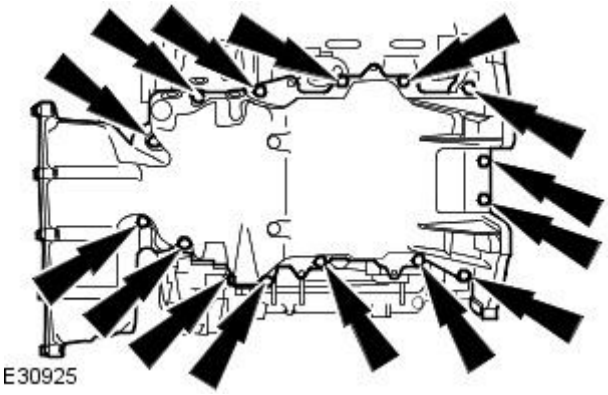


**55.** Remove the oil pan.

- Remove and discard the oil pan gasket.
- Clean and inspect the oil pan and cylinder block sealing surfaces using Metal surface cleaner or equivalent meeting Jaguar specification.

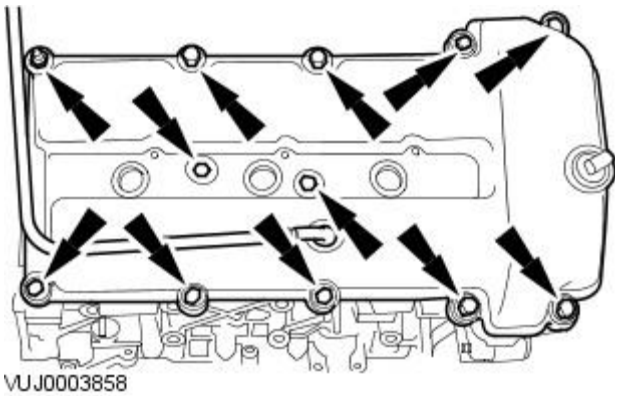


**56.** NOTE: Right-hand shown, left-hand similar.

Remove the valve covers.

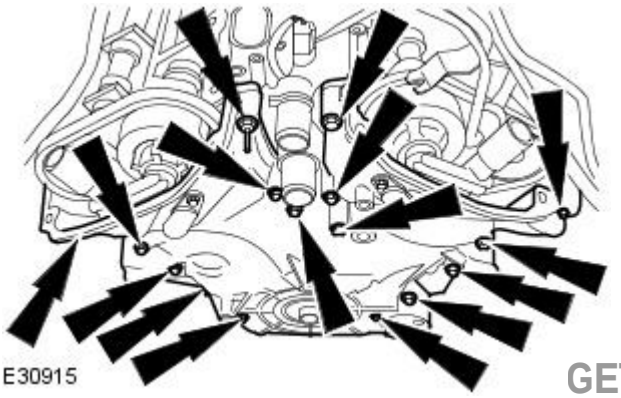


**57.** Remove the engine front cover

- Remove and discard the engine front cover gaskets.

GETtheMANUALS.org

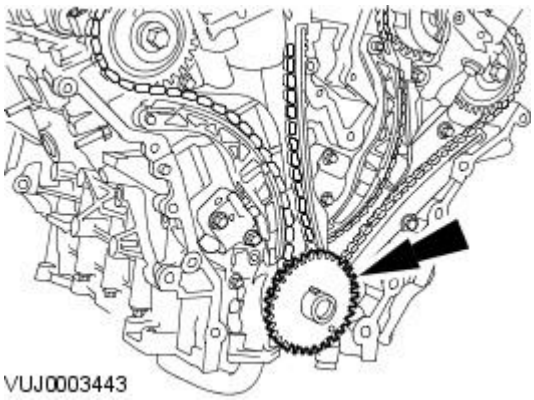
VUJ0003443

**58.** Remove the crankshaft position (CKP) sensor pulse wheel.

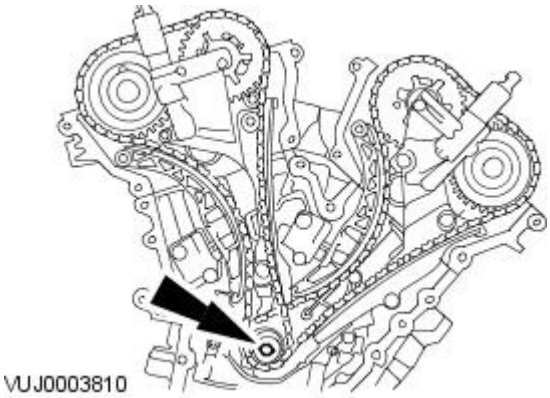
VUJ0003810

**59.** CAUTION: Do not rotate the crankshaft counterclockwise. The timing chains may bind causing engine damage.

Install the crankshaft pulley retaining bolt and washer.

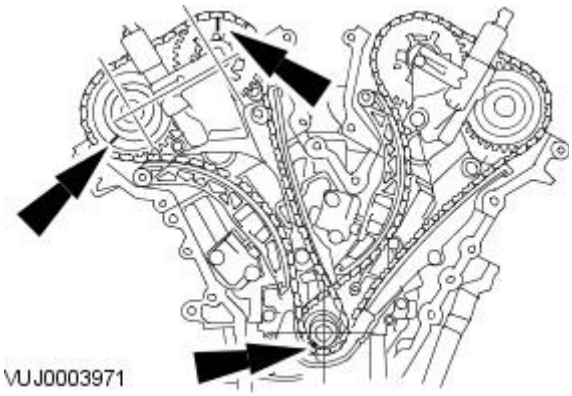
VUJ0003971

**60.** CAUTION: Do not rotate the crankshaft counterclockwise. The timing chains may bind causing engine damage.

Rotate the crankshaft clockwise until the crankshaft keyway is at the 7 O'clock position, the alignment mark on the right-hand intake camshaft sprocket is at the 1 O'clock position and the alignment mark on the right-hand exhaust camshaft sprocket is at the 8 O'clock position.

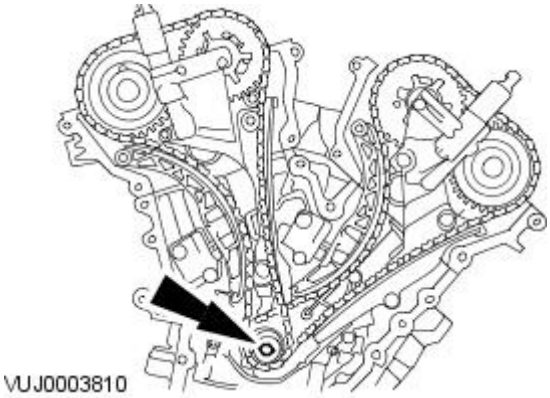
VUJ0003810

**61.** CAUTION: Do not rotate the crankshaft counterclockwise. The timing chains may bind causing engine damage.

Remove the crankshaft pulley retaining bolt and washer.

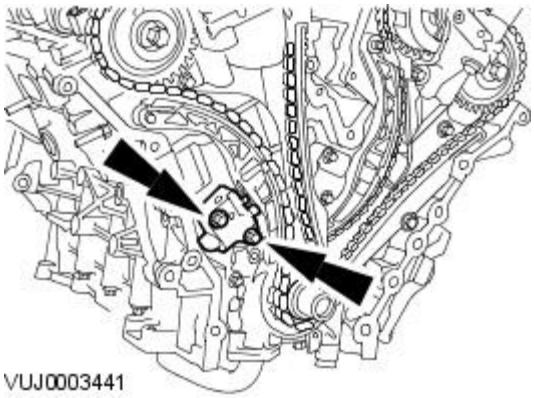
VUJ0003441

**62.** Remove the right-hand timing chain tensioner.

GETtheMANUALS.org

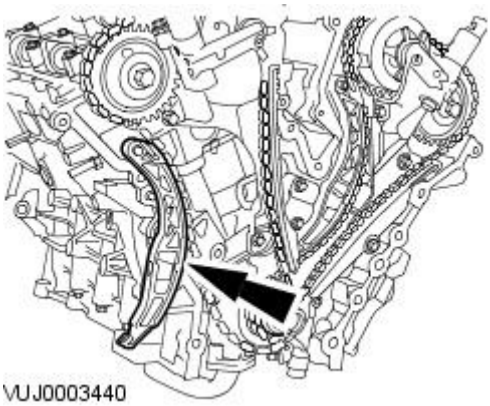


**63.** Remove the right-hand timing chain outer guide.

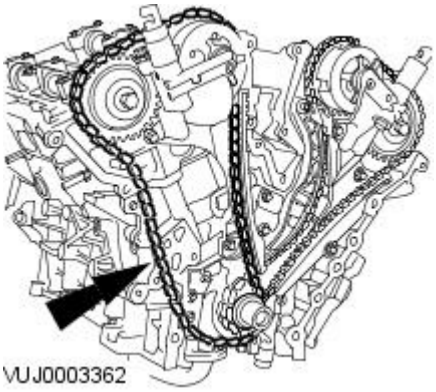


**64.** Remove the right-hand timing chain.

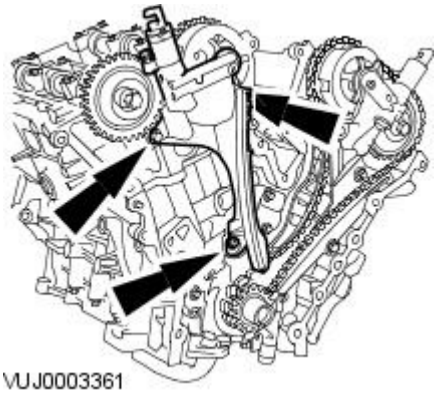


**65.** Remove the right-hand timing chain inner guide.

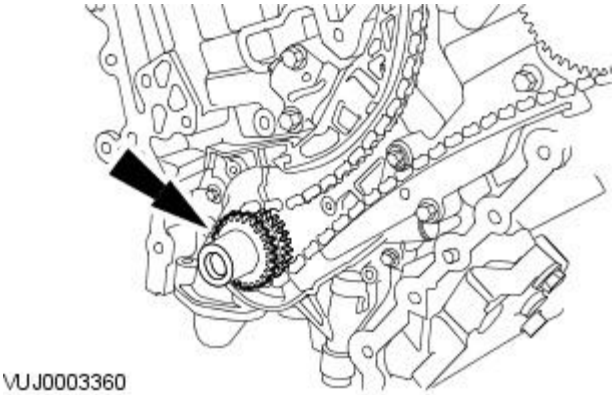


**66.** Remove the crankshaft outer sprocket.

**67.** CAUTION: Do not rotate the crankshaft counterclockwise. The timing chains may bind causing engine damage.

Install the crankshaft pulley retaining bolt and washer.

GETtheMANUALS.org

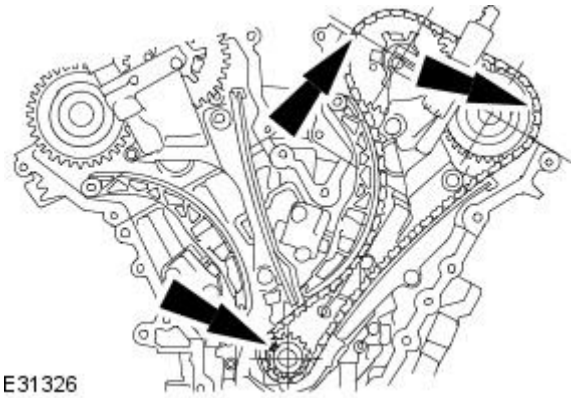


**68.** CAUTION: Do not rotate the crankshaft counterclockwise. The timing chains may bind causing engine damage.

Rotate the crankshaft clockwise until the crankshaft keyway is at the 11 O'clock position, the alignment mark on the left-hand intake camshaft sprocket is at the 9 O'clock position and the alignment mark on the left-hand exhaust camshaft sprocket is at the 2 O'clock position.

**69.** CAUTION: Do not rotate the crankshaft counterclockwise. The timing chains may bind causing engine damage.

Remove the crankshaft pulley retaining bolt and washer.

**70.** Remove the left-hand timing chain tensioner.

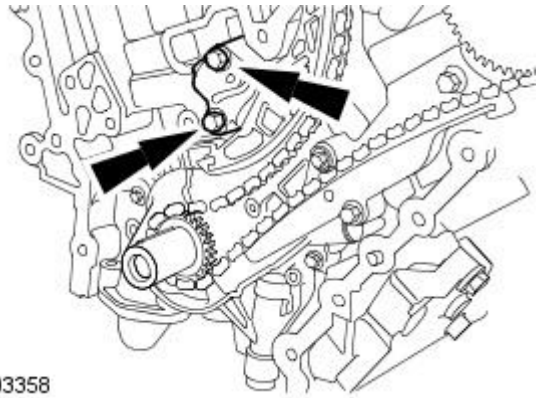


**71.** Remove the left-hand timing chain inner guide.

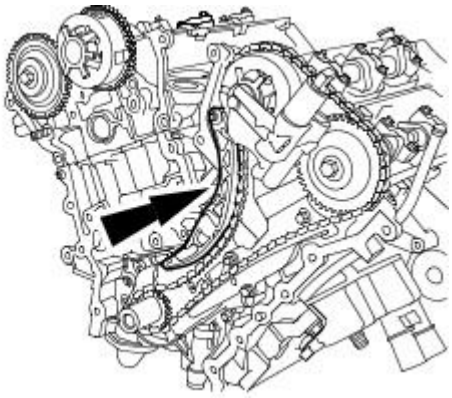


**72.** Remove the left-hand timing chain.

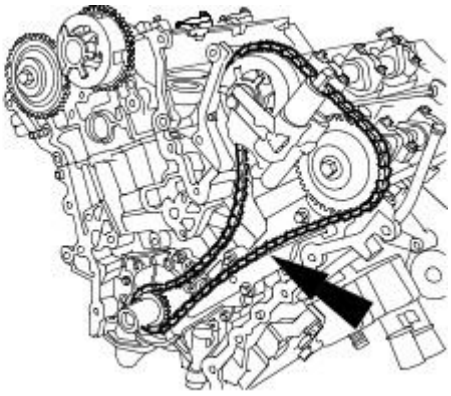


GETtheMANUALS.org

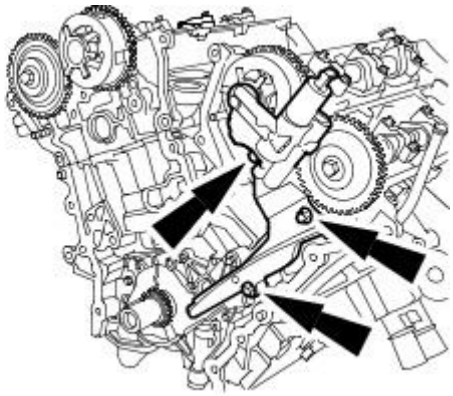

VUJ0003355

**73.** Remove the left-hand timing chain outer guide.

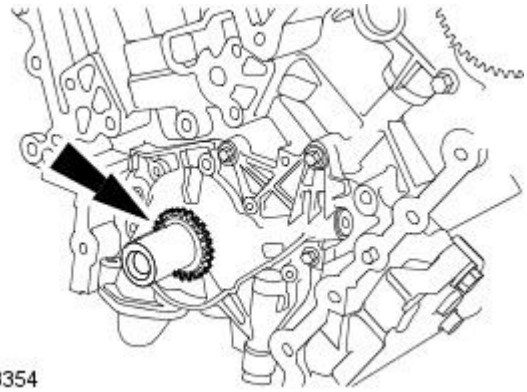

VUJ0003354

**74.** Remove the crankshaft inner sprocket.

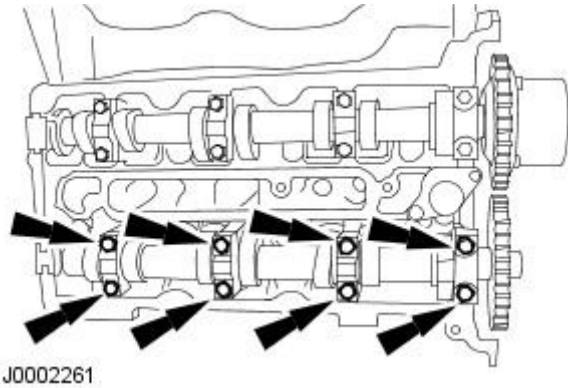

VUJ0002261

**75.** Remove the RH exhaust camshaft bearing cap bolts evenly.

- Remove the exhaust camshaft bearing caps.

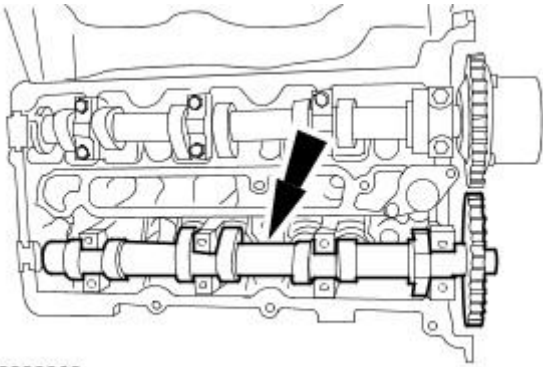

VUJ0002263

**76.** Remove the RH exhaust camshaft.

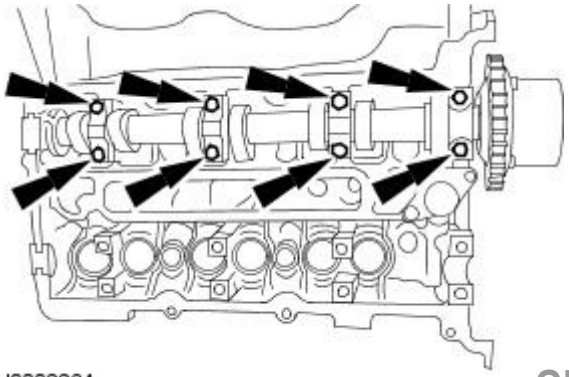

VUJ0002264

**77.** Remove the RH inlet camshaft bearing cap bolts evenly.

- Remove the inlet camshaft bearing caps.

GETtheMANUALS.org

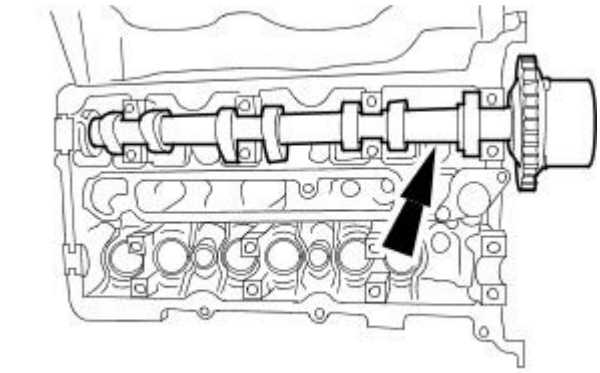

VUJ0002266

**78.** Remove the RH inlet camshaft.

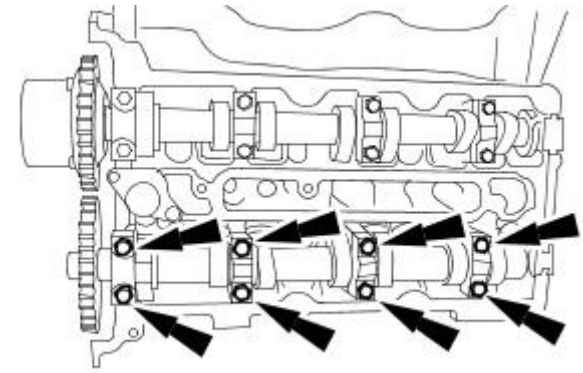

VUJ0002267

**79.** Remove the LH exhaust camshaft bearing cap bolts evenly.

- Remove the exhaust camshaft bearing caps.

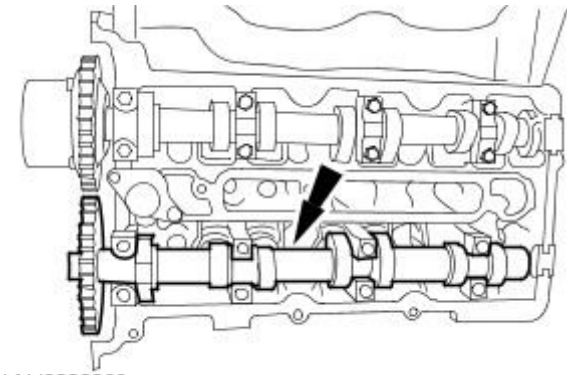

VUJ0002269

**80.** Remove the LH exhaust camshaft.

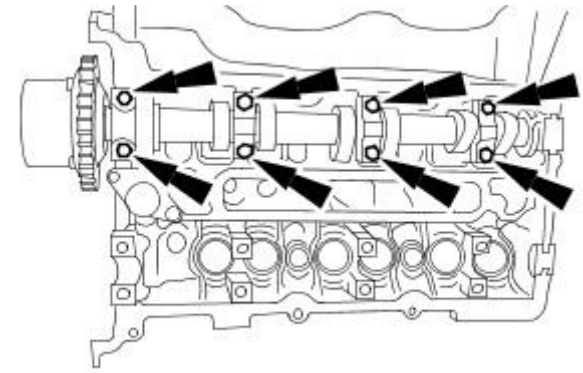

VUJ0002270

**81.** Remove the LH inlet camshaft bearing cap bolts evenly.

- Remove the inlet camshaft bearing caps.

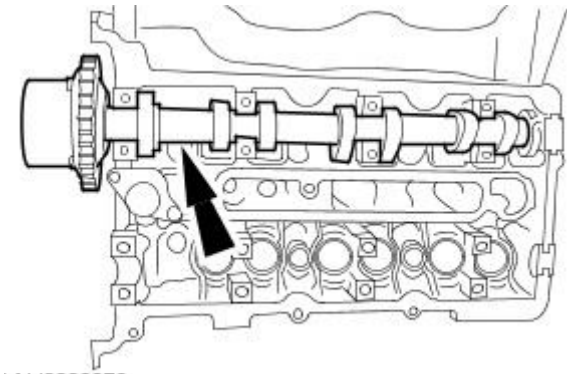

VUJ0002272

**82.** Remove the LH inlet camshaft.

GETtheMANUALS.org

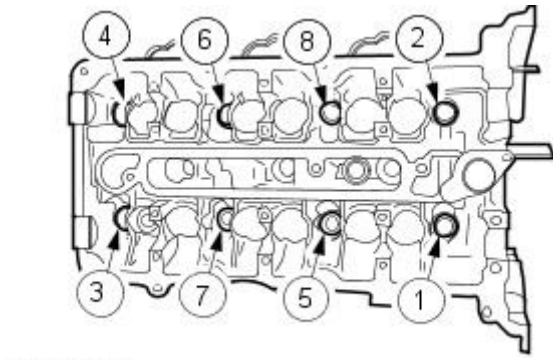

VUJ0002273

**83.** NOTE: Remove the bolts in the indicated sequence.

Remove the RH cylinder head.

- Discard the gasket.

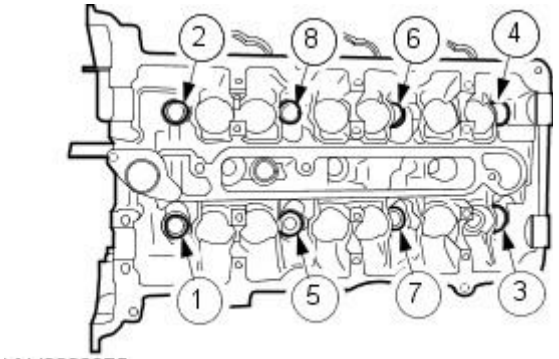

VUJ0002275

**84.** NOTE: Remove the bolts in the indicated sequence.

Remove the LH cylinder head.

- Discard the gasket.

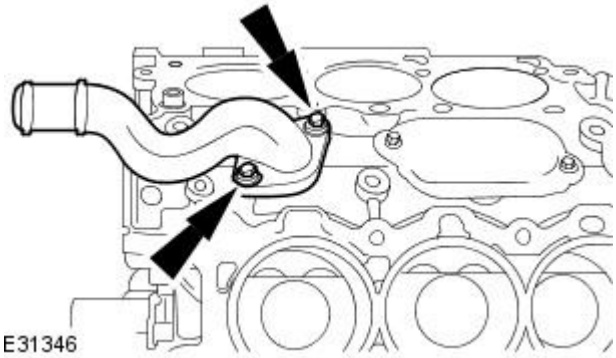
E31346

**85.** Remove the engine coolant housing.

- Discard the 'O' ring seals.

VUJ0003458

**86.** NOTE: Engine inverted for clarity.

Remove the oil pump tube.

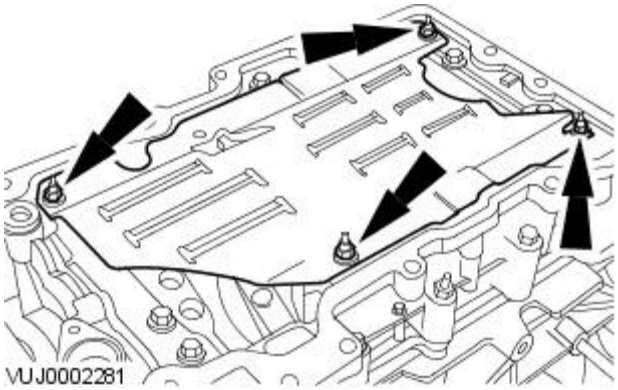
VUJ0002281

**87.** Remove the oil pan baffle.

GETtheMANUALS.org

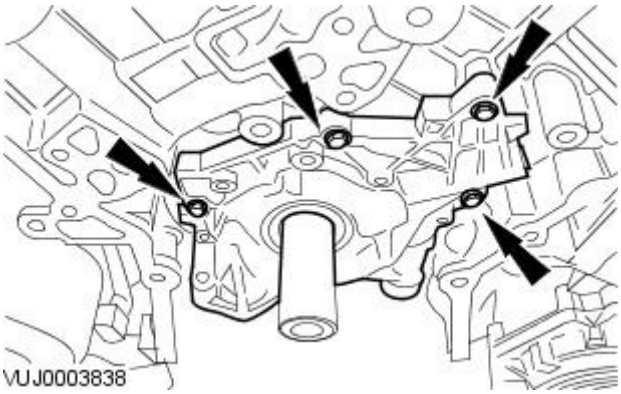


**88.** Remove the oil pump.

- Remove and discard the O-ring seal.
- Inspect the oil pump for damage and wear.

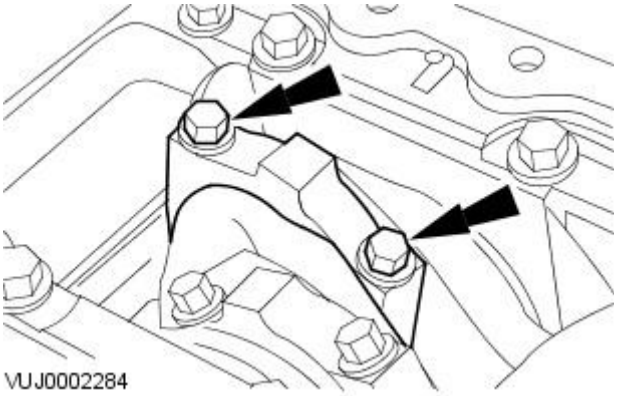


**89.** CAUTION: Pistons, connecting rods and connecting rod bearings should be numbered to make sure they are reassembled in the same position.

• NOTE: Mark the position of the connecting rod caps to the connecting rods to make sure correct insulation.

• NOTE: Discard the connecting rod bolts after removal.

Remove the connecting rod bolts, the connecting rod caps and the lower connecting rod bearings.

**90.** Inspect the tops of the cylinder bores. As necessary remove ridge and carbon build up from each cylinder.

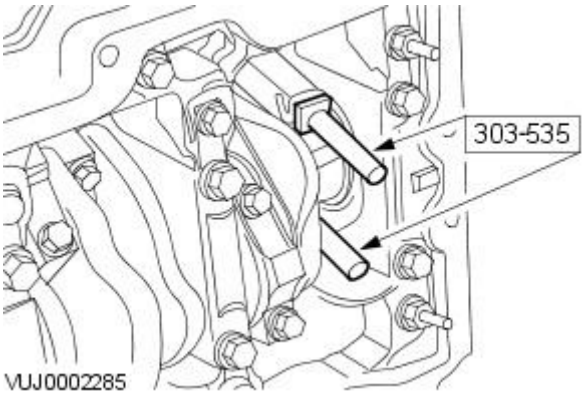


**91.** CAUTION: Use appropriate protection to prevent damage to the crankshaft bearing journals and cylinder bore surfaces.

Install special tools to the connecting rods.

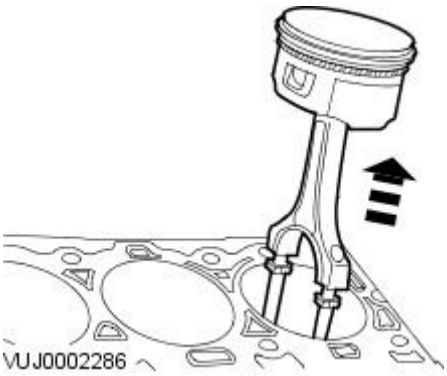


**92.** CAUTION: Care should be taken not to damage the connecting rod and cap joint face surfaces or possible engine damage may occur. Avoid contaminating the fracture joint surfaces with dirt or grease.

• NOTE: Reattach the connecting rods and caps after removal to avoid mismatch.

Remove the pistons.

- Rotate the crankshaft to locate pistons at the bottom of travel.
- Push the piston, connecting rod and upper bearing through the top of the cylinder.

**93.** NOTE: Remove the lower cylinder block bolts in the indicated sequence.

Remove the lower cylinder block.

GETtheMANUALS.org

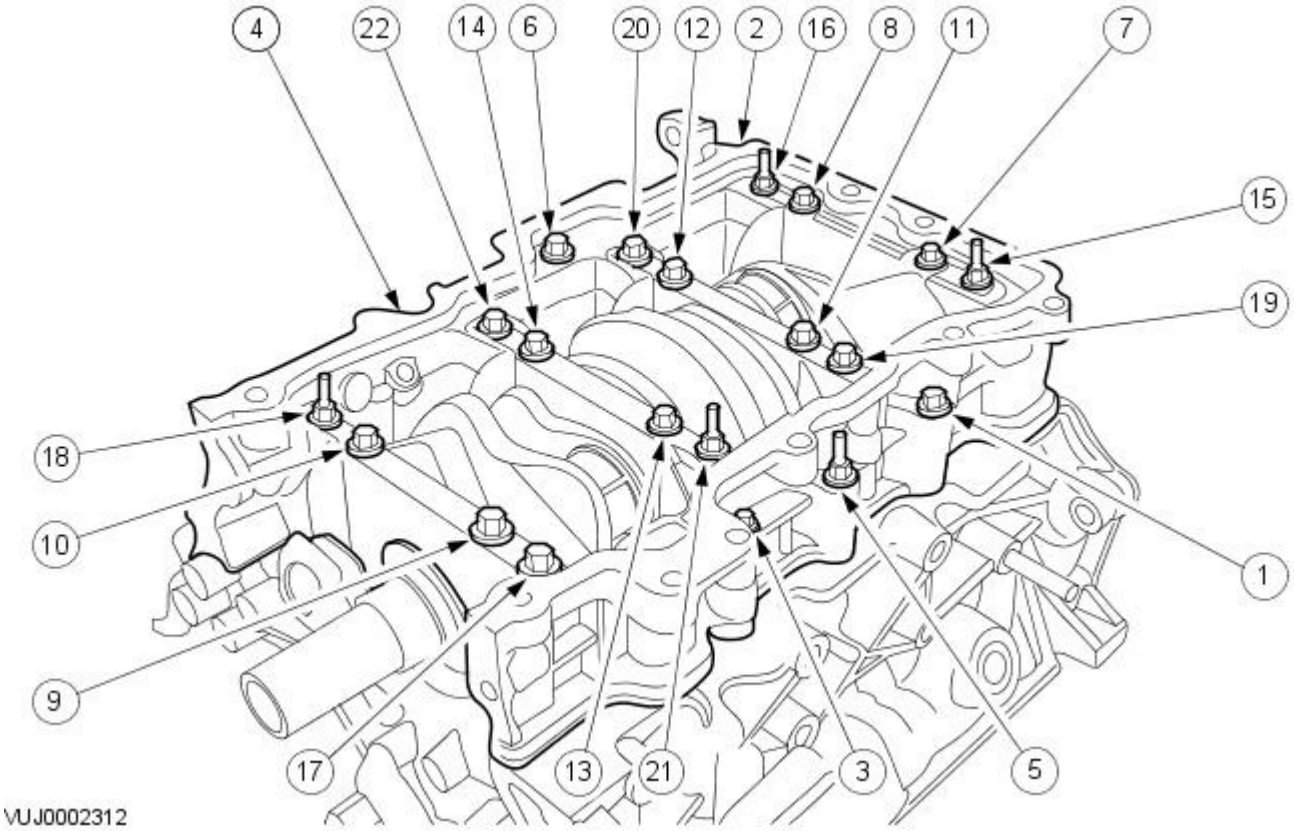


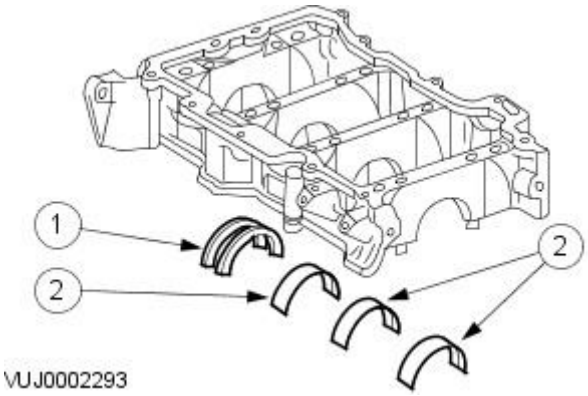


**94.** NOTE: Mark the position of the upper and lower crankshaft main bearing and the crankshaft thrust bearing for reassembly.

Remove the lower crankshaft bearings.

1. Remove the lower crankshaft thrust main bearing.
2. Remove the lower crankshaft main bearings.

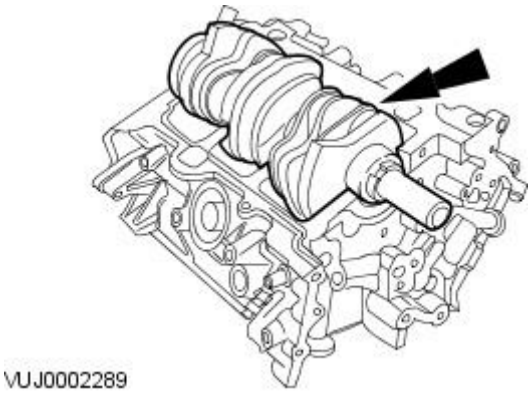


**95.** CAUTION: Avoid damage to any crankshaft bearing surfaces.

• NOTE: Never remove any pipe plugs or dowels unless they are to be newly installed or the cylinder block is to be washed.

Remove the crankshaft.

- Discard the crankshaft rear main oil seal.

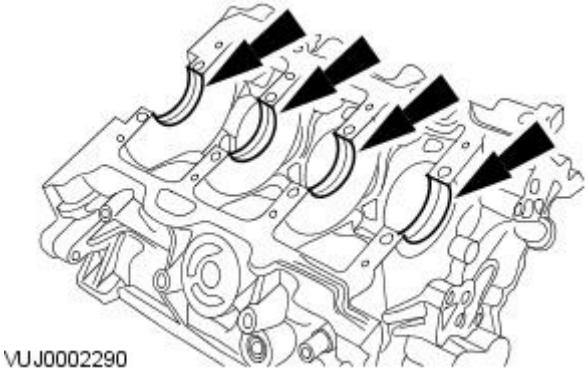


**96.** Remove the upper crankshaft main bearings.

GETtheMANUALS.org

**97.** Clean the cylinder block with a soap and water solution. Dry the cylinder block completely with compressed air.

# Engine - 2.5L NA V6 - AJV6 / 3.0L NA V6 - AJ27 - Cylinder Head

Disassembly and Assembly of Subassemblies

| Special Tool(s) | |
|---|---|
| 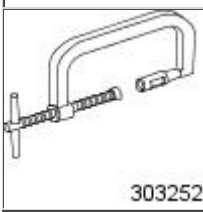 303252 | Valve Spring Compressor<br><br>303-252 |

## Disassembly

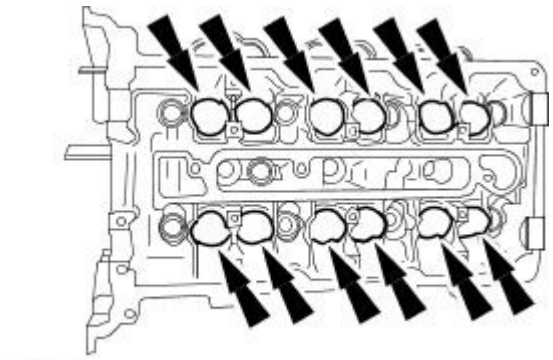

E30946

**1.** CAUTION: If the cylinder head valve components are to be reused, mark position of the valve components to make sure they are reassembled in the same position.

Remove the bucket tappet and shim assemblies.

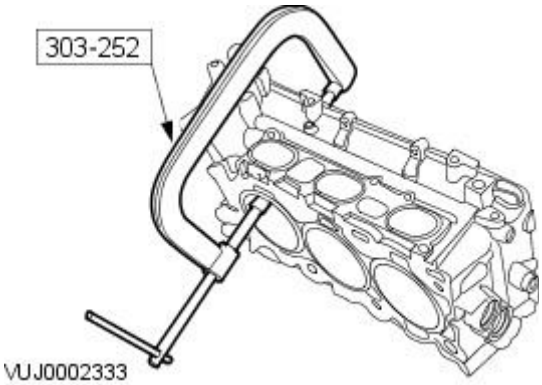


VUJ0002333

**2.** Using the special tool, compress the valve springs.

- Remove the valve collets.

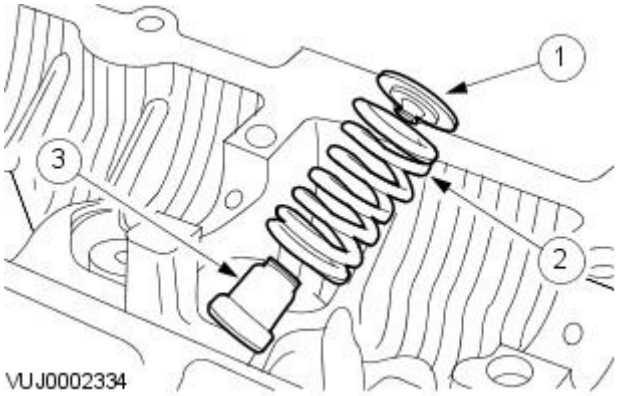


VUJ0002334

**3.** Remove the valve spring retainers and valve springs.

1. Remove the valve spring retainers.
2. Remove the valve springs.
3. Remove the valve stem oil seals.

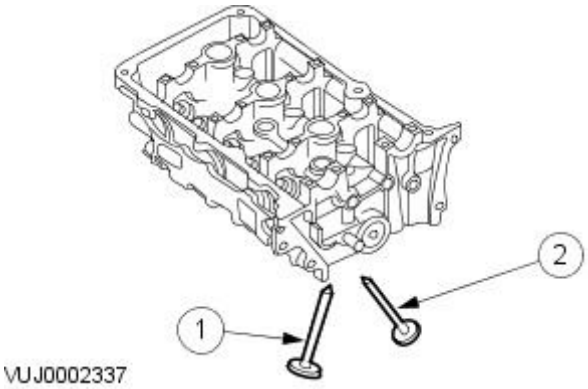


VUJ0002337

**4.** Remove the valves from the cylinder heads.

1. Remove the intake valves.
2. Remove the exhaust valves.

GETtheMANUALS.org

**5.** Inspect the cylinder heads and the related components.
For additional information, refer to Section 303-00 Engine System -

General Information.

6. Remove the pipe plugs and alignment dowels as necessary to clean the cylinder heads.

## Assembly

1. WARNING: Eye protection is required during use of compressed air. Failure to follow these instructions may result in personal injury.

CAUTION: The cylinder head surface finish is measured in microns. For correct head gasket sealing, avoid any contact of finish with metallic objects.

Clean gasket material, dirt and foreign material from cylinder heads. Wash with a suitable soap and water solution and dry completely using compressed air if pipe plugs have been removed.

2. Install the pipe plugs and alignment dowels to cylinder heads.
   - Apply pipe sealant to plugs prior to installation.

3. NOTE: Lubricate the valve stems before assembly.

Install the valves into the cylinder heads.

1. Install the intake valves.
2. Install the exhaust valves.

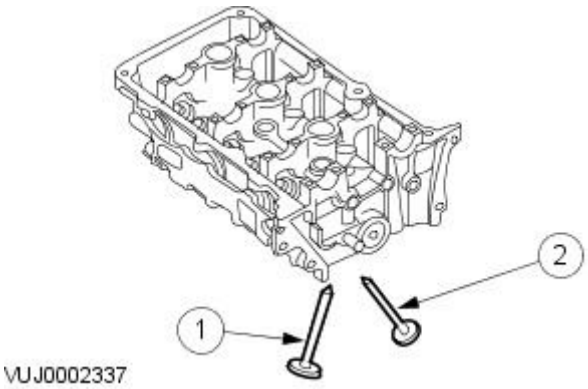


4. Install the valve spring retainers and valve springs.

1. Install the valve stem oil seals.
2. Install the valve springs.
3. Install the valve spring retainers.

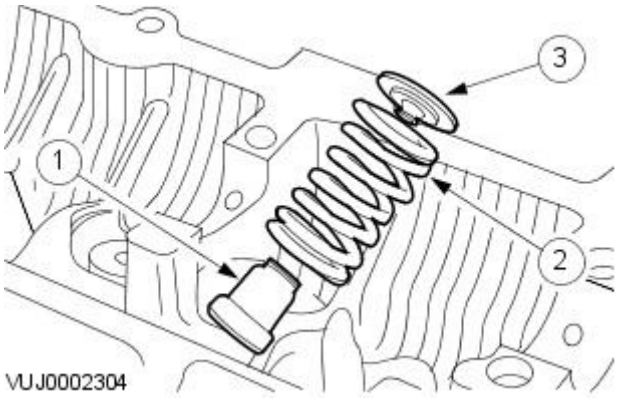


5. Using the special tool, compress the valve springs.
   - Install the valve collets.

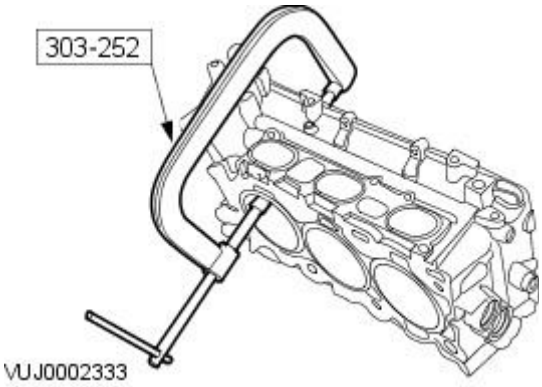


GETtheMANUALS.org

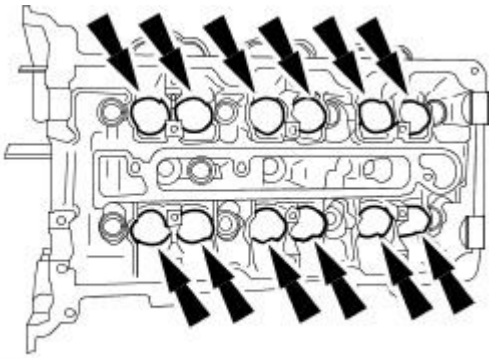

E30946

**6.** Install the bucket tappet and shim assemblies.

GETtheMANUALS.org

# Engine - 2.5L NA V6 - AJV6 / 3.0L NA V6 - AJ27 - Piston

Disassembly and Assembly of Subassemblies

## Disassembly

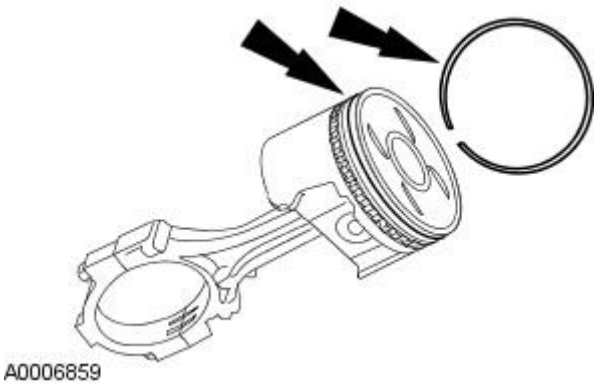


**1.** NOTE: Mark the pistons to the original connecting rods to make sure correct installation in the same cylinders from which they were removed.

Remove the top compression ring.

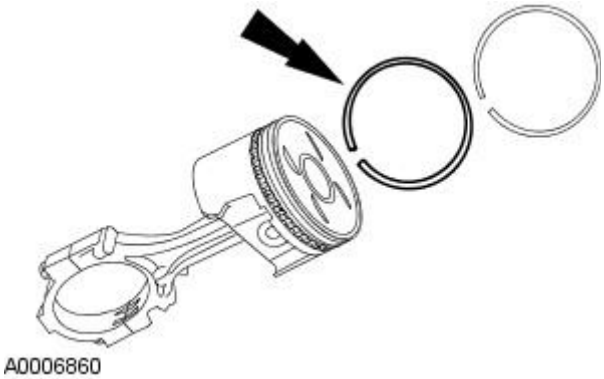


**2.** Remove the second compression ring.

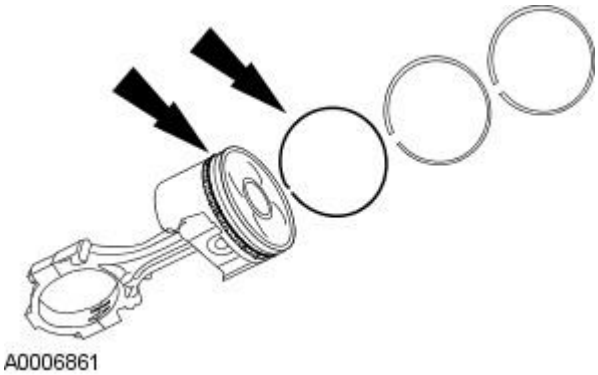


**3.** Remove the first oil control ring.

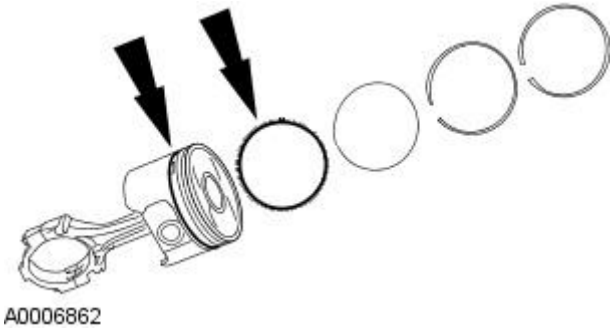


**4.** Remove the oil control spacer ring.

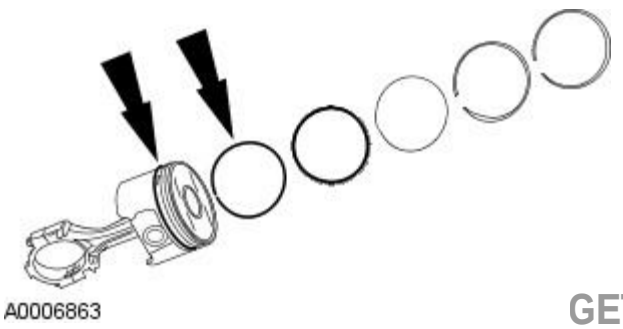


**5.** Remove the second oil control ring.

GETtheMANUALS.org

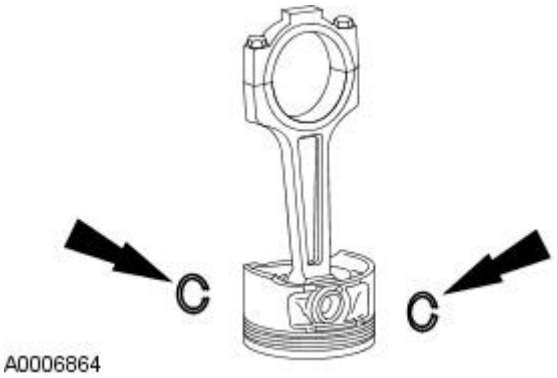


**6.** WARNING: The retaining rings have a tendency to spring out during removal. Cover the end of the pin bore with a hand or a rag when removing the retaining ring. Eye protection should be worn. Failure to follow these instructions may result in personal injury.

Remove the retaining clips.

**7.** Remove the piston pin and the connecting rod from the piston.

**8.** Clean and inspect the connecting rod and the piston. For additional information, refer to Section 303-00 Engine System - General Information.

## Assembly

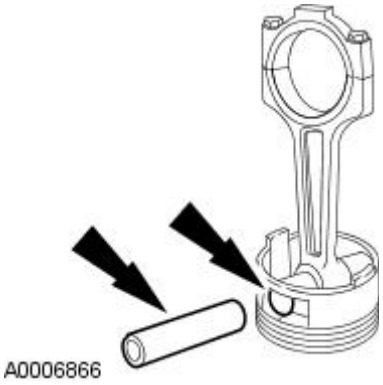


**1.** Install the piston pin.

- Lubricate the piston pin and piston bore.

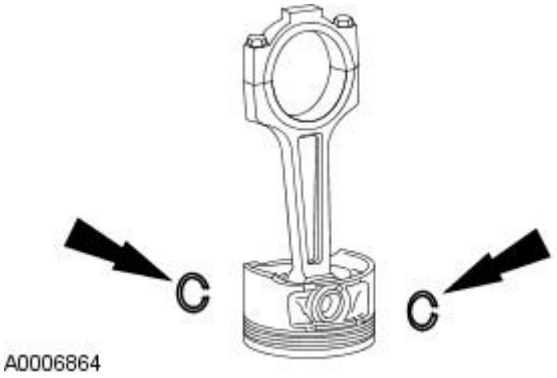


**2.** Install the retaining clips.

**3.** Check the piston ring end gap. For additional information, refer to Section 303-00 Engine System - General Information.

**4.** Lubricate the piston and piston rings.

GETtheMANUALS.org

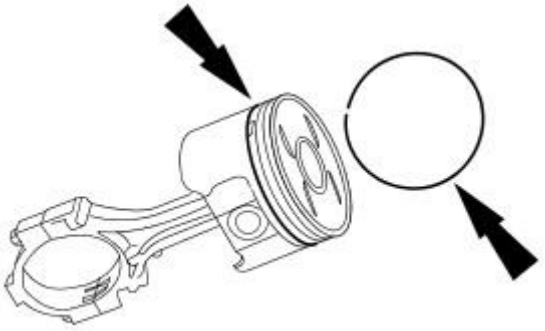

A0006867

**5.** Install the second oil control ring.

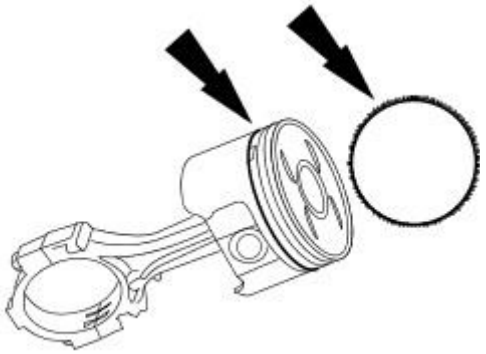

A0006856

**6.** Install the oil control spacer ring.

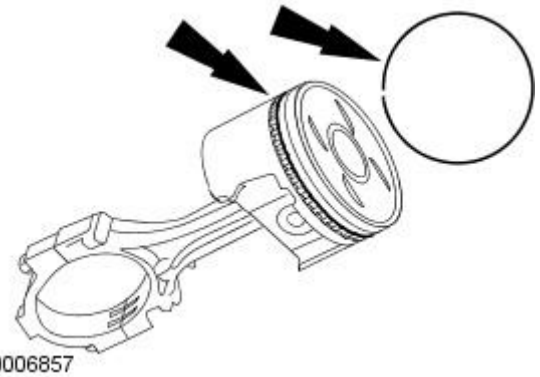

A0006857

**7.** Install the first oil control ring.

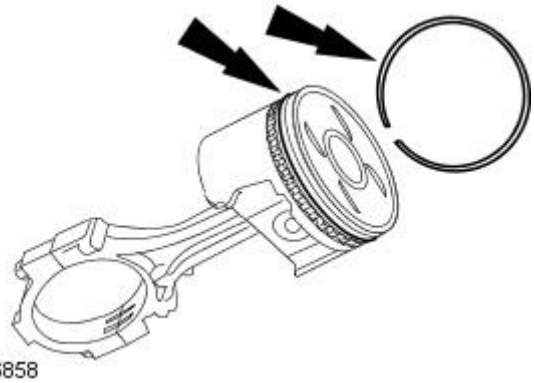

A0006858

**8.** Install the second compression ring.

- The top of the second compression ring has a "0" marked on it. Position this side of the ring towards the top of the piston.

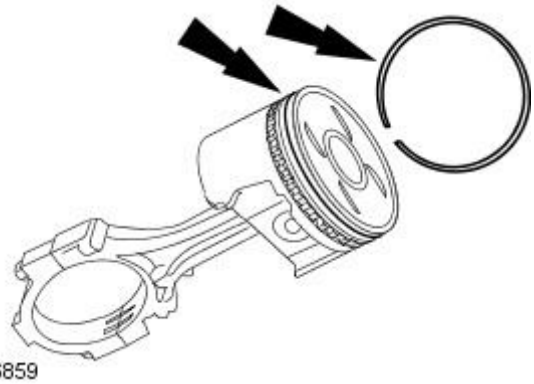

A0006859

**9.** Install the top compression ring.

- The top compression ring can be installed with either side up.

GETtheMANUALS.org

# Engine - 2.5L NA V6 - AJV6 / 3.0L NA V6 - AJ27 - Engine

Assembly

| Special Tool(s) | |
|---|---|
| 303D055 | Wrench Strap-Universal<br><br>303-D055 |
| 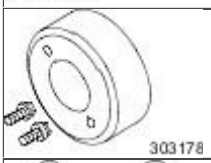 303178 | Crankshaft Rear Seal Installer<br><br>303-178 |
| 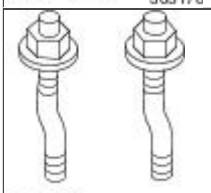 303384 | Crankshaft Rear Seal Installer Adapter Bolts<br><br>303-384 |
| 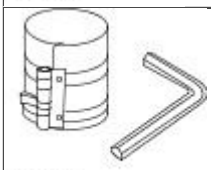 303372 | Piston Ring Compressor<br><br>303-372 |
| 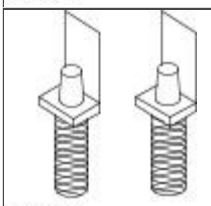 303535 | Cylinder Bore Protector<br><br>303-535 |

## Assembly

**1.** CAUTION: Use only plastic scraper when removing old gasket material.

Clean all the mating faces and reusable parts thoroughly and check for damage.

- If gasket material remains on the cylinder head after cleaning, use a plastic tipped scraper to remove remaining material.

**2.** NOTE: Never remove pipe plugs or alignment dowels unless they are to be serviced.

Reseal oil passage blanking plugs, as necessary.

**3.** NOTE: The main bearings are precision selective fit. For additional information, refer to Section 303-00 Engine System - General Information.

Install the upper crankshaft thrust washer.

- Align assembly tab on thrust bearing to machining spot face on cylinder block.

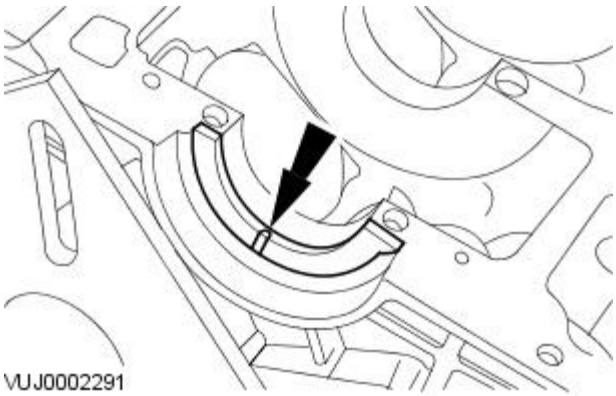


GETtheMANUALS.org

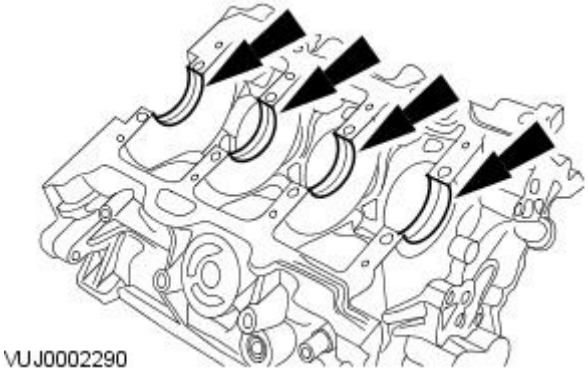
VUJ0002290

**4.** Install the upper crankshaft main bearings.

- Lubricate the bearings and thrust washer.

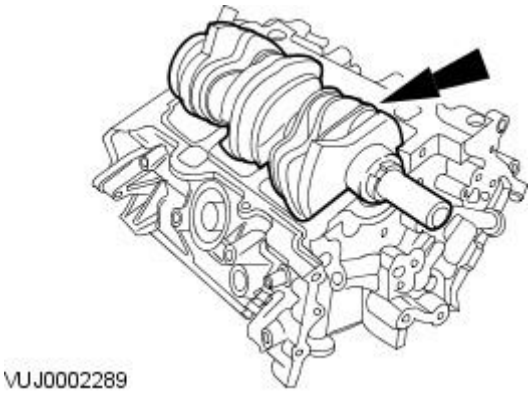
VUJ0002289

**5.** CAUTION: Avoid damage to any crankshaft journal bearing surfaces.

Install the crankshaft.

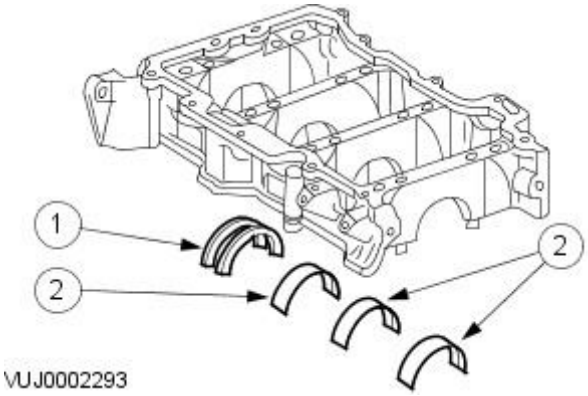

VUJ0002293

**6.** NOTE: Push the crankshaft rearward prior to installation of upper thrust bearings.

• NOTE: Visually inspect the bearings to verify that the bearing oiling holes align with cylinder block oil feed holes.

Install the lower crankshaft bearings into the cylinder block.

1. Install the lower crankshaft thrust main bearing into lower cylinder block.
2. Install the lower crankshaft main bearings into lower cylinder block.

- Lubricate the bearings and thrust washer.

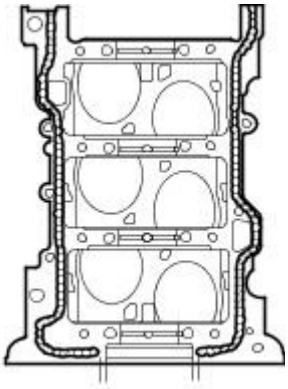
VUJ0002294

**7.** NOTE: Sealant application must stop 6 mm from the rear crankshaft bore on each side.

• NOTE: Install lower cylinder block and tighten all bolts to specification within four minutes of applying sealer.

Apply a bead of sealant to the cylinder block housing.

- Use Silicone gasket and sealant.

**8.** CAUTION: Make sure all dowels are fully seated into lower cylinder block prior to tightening the bolts.

• NOTE: Before installing the bolts lightly seat the crankshaft forward.

• NOTE: Do not lubricate the lower cylinder block bolts.

• NOTE: Loosely install the lower cylinder block bolts.

• NOTE: Do not rotate crankshaft until all bolts are tightened to specification.

• NOTE: Bolts must be tightened within 4 minutes of applying sealant.

Install the lower cylinder block on the cylinder block.

- Push crankshaft rearward to seat the crankshaft thrust washer.

GETtheMANUALS.org

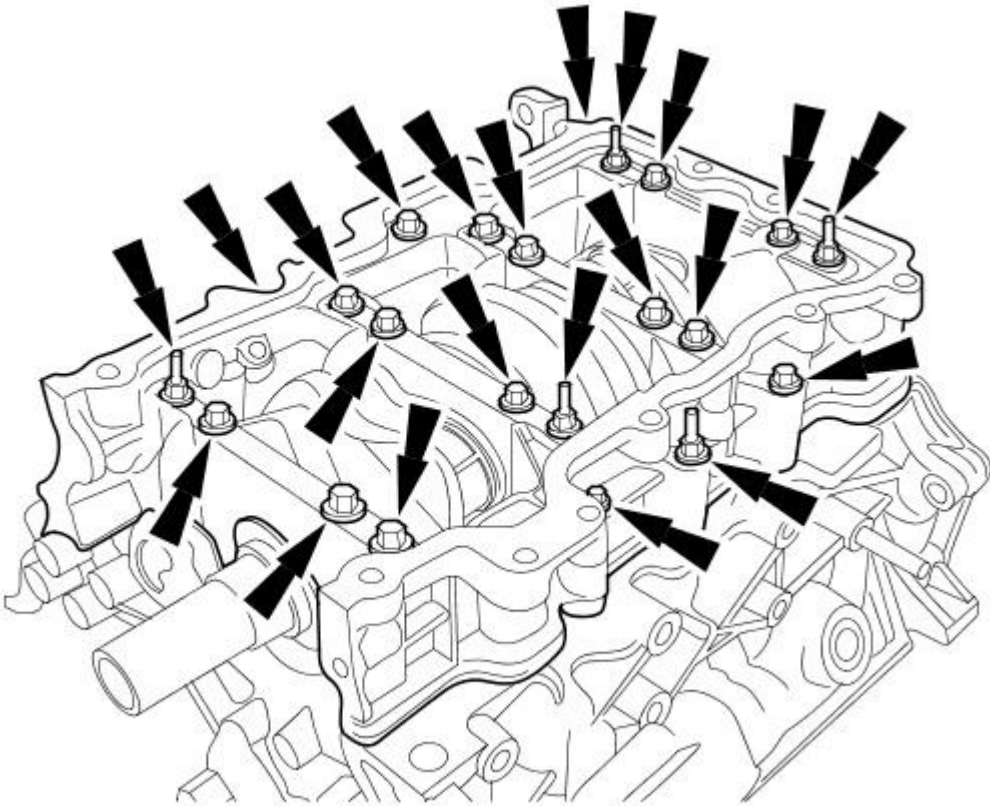

VUJ0002287

**9.** CAUTION: Bolts 1 through 16 are tighten-to-yield and must be replaced.

• NOTE: Tighten the bolts in the indicated sequence in four stages.

Complete the tightening sequence.

- Stage 1: Bolts 1-8, 25 Nm
- Stage 2: Bolts 9-16, 40 Nm
- Stage 3: Bolts 1-16, 90°
- Stage 4: Bolts 17-22, 25 Nm
- Verify the crankshaft rotates freely.

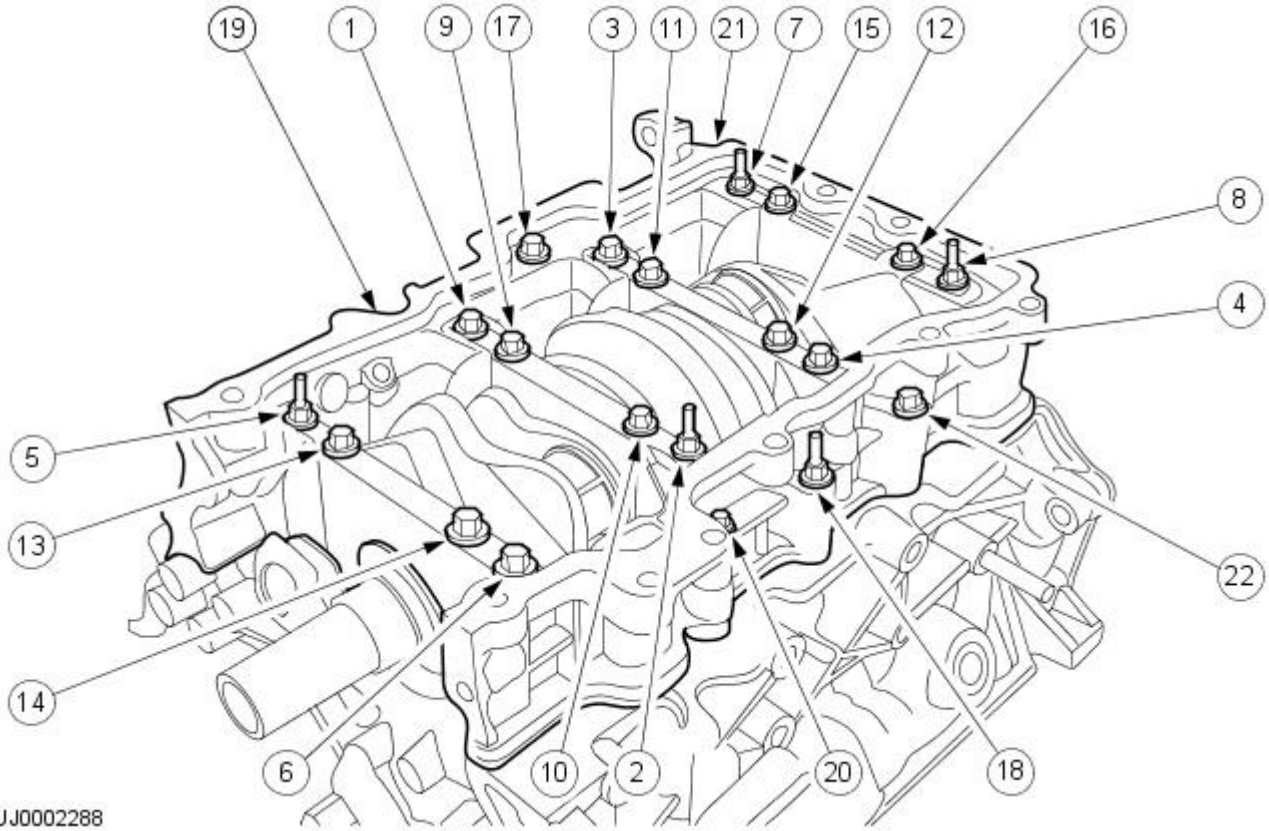


VUJ0002288

**10.** Remove excess sealant which may squeeze out at the front cover sealing surface.

GETtheMANUALS.org

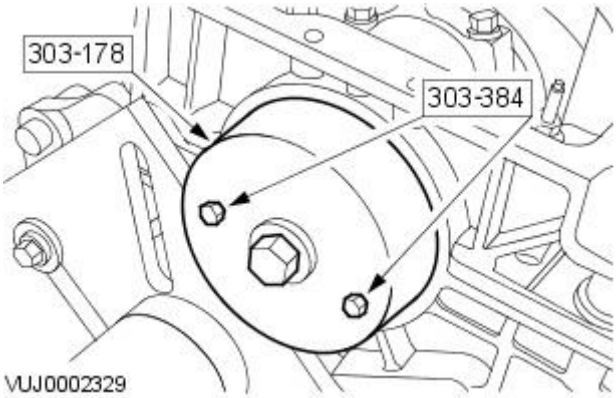


**11.** NOTE: Alternate bolt tightening to correctly seat the crankshaft rear oil seal until it is flush with the cylinder block.

Using the special tools, install the crankshaft rear oil seal.

**12.** CAUTION: Use appropriate protection to prevent damage to the crankshaft bearing journals and cylinder bore surfaces.

Install special tools to the connecting rods.

- Position the crankshaft journal at the bottom of the stroke.

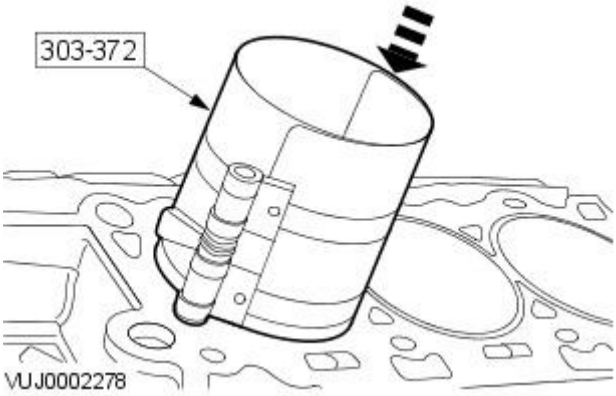


**13.** NOTE: Make sure the piston ring gaps are positioned at different locations opposite the thrust side of the piston before installation.

• NOTE: Install pistons with arrow to front of engine.

Using the special tool compress the rings and install the piston and connecting rod.

- Lubricate all piston components.

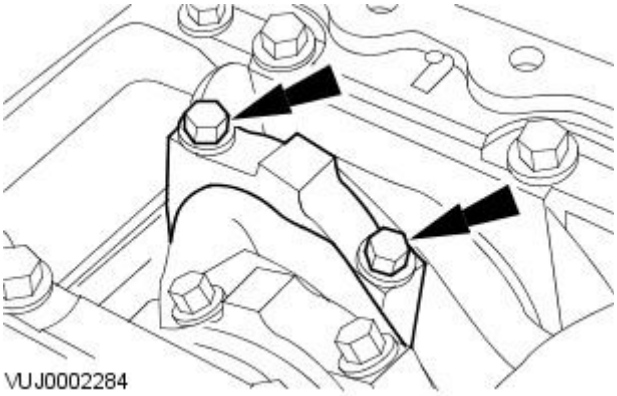


**14.** CAUTIONS:

When assembling the connecting rods and connecting rod caps, it is imperative that bearing slots and tangs be located on the same side of the connecting rods.

Connecting rod bolts are torqued to yield and must be replaced.

• NOTE: Remove the special tools from the connecting rods.

• NOTE: Tighten the bolts in the indicated sequence in three stages.

Position the connecting rod cap on the appropriate connecting rod.

- Stage 1: 23 Nm
- Stage 2: 43 Nm
- Stage 3: 105°

**15.** Rotate the crankshaft to check correct operation.

**16.** CAUTIONS:

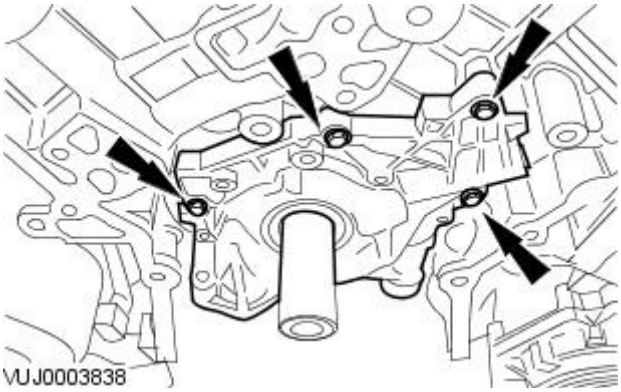


Install the oil pump flush to the cylinder block for correct sealing.

Rotate the inner rotor of the oil pump to align with the flats on the crankshaft before installation.

Install the oil pump.

- Tighten to 10 Nm.

GETtheMANUALS.org

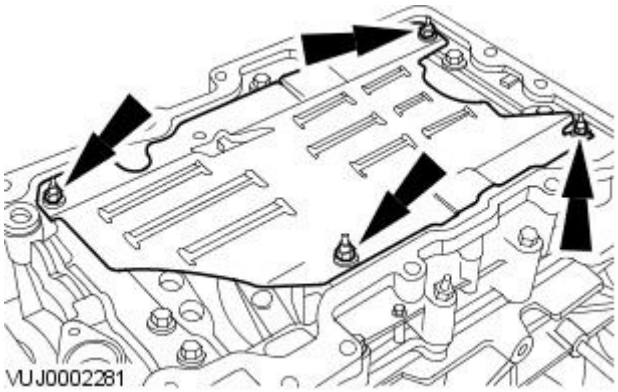


**17.** CAUTION: Oil pan baffle nuts are tightened to yield and must not be reused.

• NOTE: Tighten the bolts in the indicated sequence in two stages.

Install the oil pan baffle.

- Stage 1: 5 Nm
- Stage 2: 45°

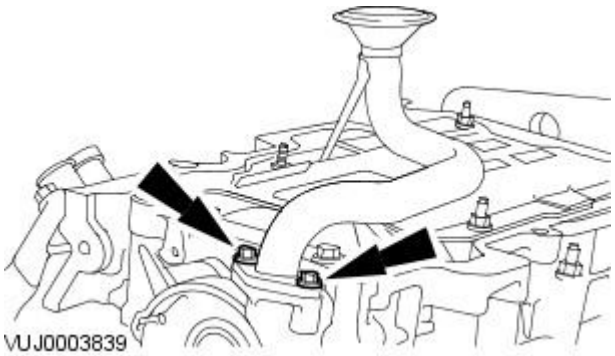


**18.** NOTE: Engine inverted for clarity.

Install the oil pump tube.

- Install a new O-ring seal.
- Tighten to 10 Nm.

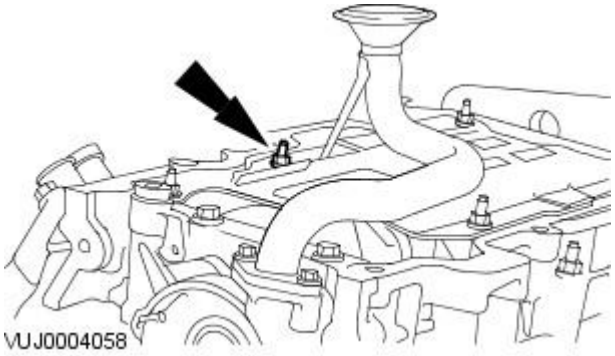


**19.** NOTE: Engine inverted for clarity.

Tighten to 5 Nm + 45°.

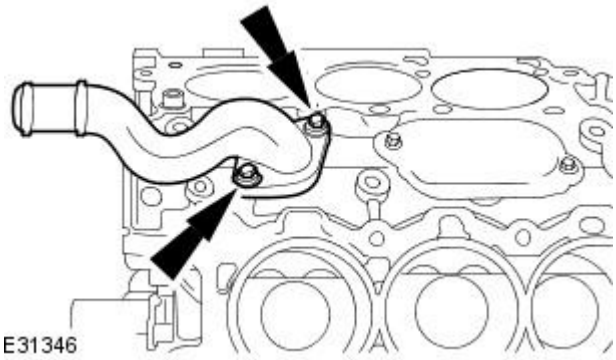


**20.** Install the engine coolant housing.

- Install new 'O' ring seals.
- Tighten to 25 Nm.

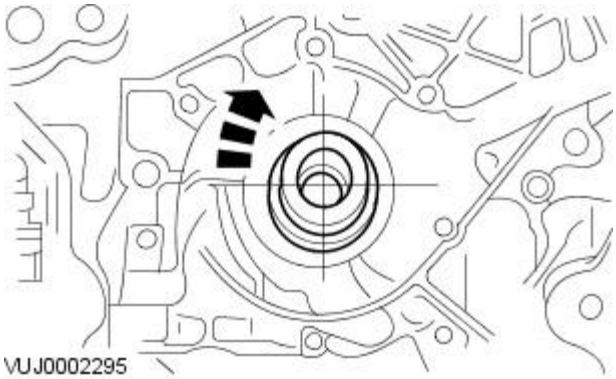


**21.** Position the crankshaft.

- Turn the crankshaft until the key is in the 11 o'clock position.
- Remove the crankshaft pulley bolt and washer.

GETtheMANUALS.org

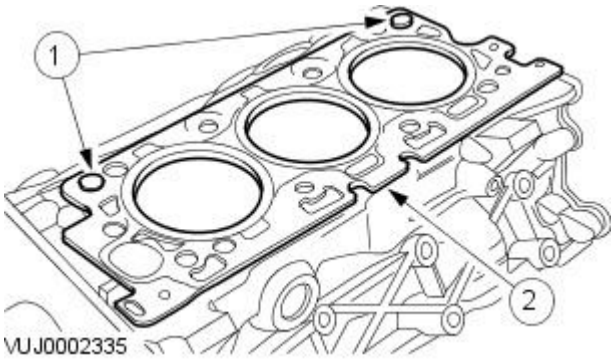


**22.** Install a new cylinder head gasket (LH shown - RH similar).

1. Make sure the cylinder head dowels are correctly located.
2. Install a new cylinder head gasket.

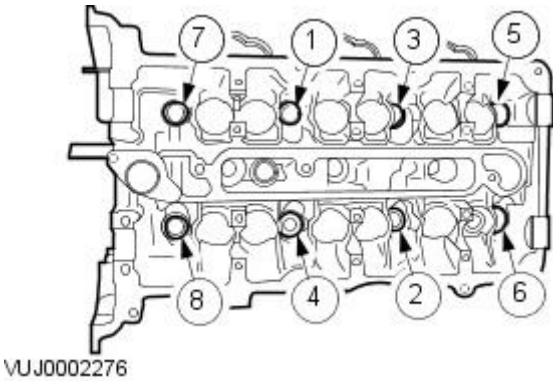


**23.** NOTE: Install the bolts in the indicated sequence.

Install the LH cylinder head.

- Tighten to 30 Nm.
- Tighten 90°.
- Loosen 360°.
- Tighten to 30 Nm.
- Tighten 90°.
- Tighten 90°.

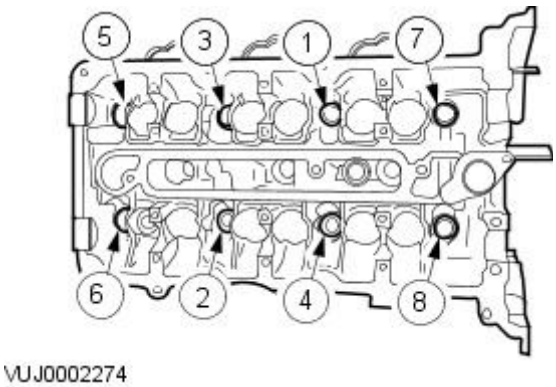


**24.** NOTE: Install the bolts in the indicated sequence.

Install the RH cylinder head.

- Tighten to 30 Nm.
- Tighten 90°.
- Loosen 360°.
- Tighten to 30 Nm.
- Tighten 90°.
- Tighten 90°.

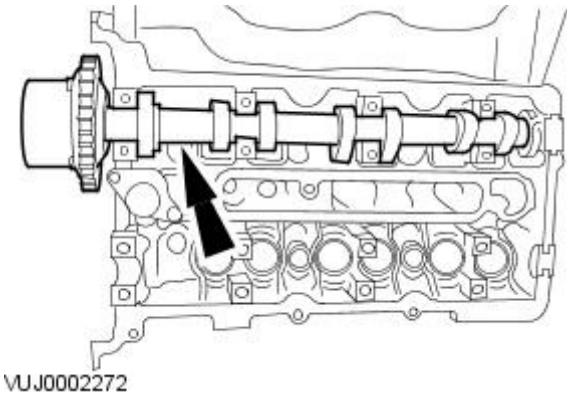


**25.** Install the LH inlet camshaft.

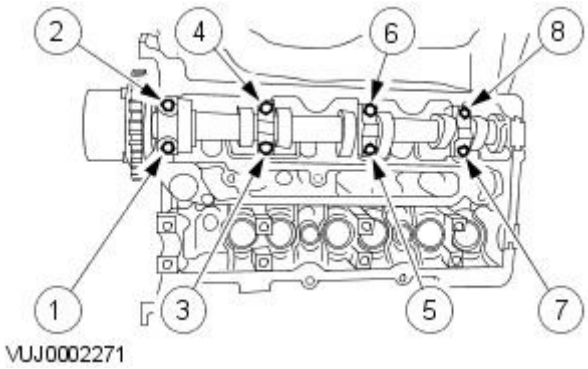


**26.** CAUTION: Do not install the cylinder head camshaft journal thrust caps until the camshaft journal caps are installed or damage to the thrust caps may occur.

• NOTE: Lubricate the camshafts and the camshaft bearing caps with oil WSE-M2C908-A or equivalent meeting Jaguar specification prior to installation.

Install the LH inlet camshaft bearing cap bolts evenly.

- Install the inlet camshaft bearing caps.
- Tighten to 10 Nm.

GETtheMANUALS.org

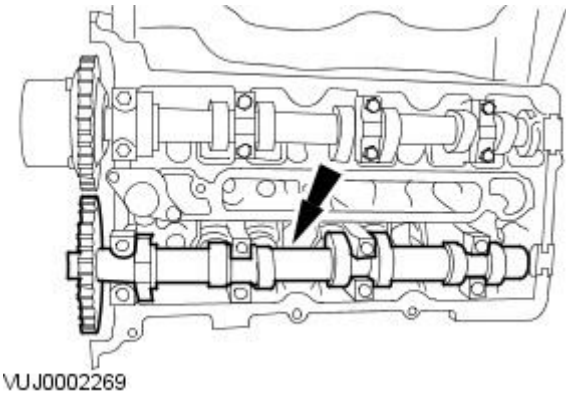

VUJ0002269

**27.** Install the LH exhaust camshaft.

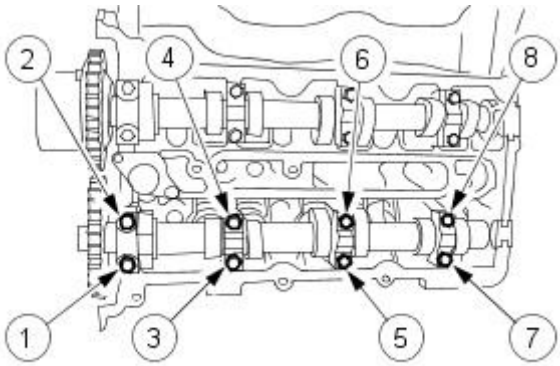


VUJ0002268

**28.** CAUTION: Do not install the cylinder head camshaft journal thrust caps until the camshaft journal caps are installed or damage to the thrust caps may occur.

• NOTE: Lubricate the camshafts and the camshaft bearing caps with oil WSE-M2C908-A or equivalent meeting Jaguar specification prior to installation.

Install the LH exhaust camshaft bearing cap bolts evenly.

- Install the exhaust camshaft bearing caps.

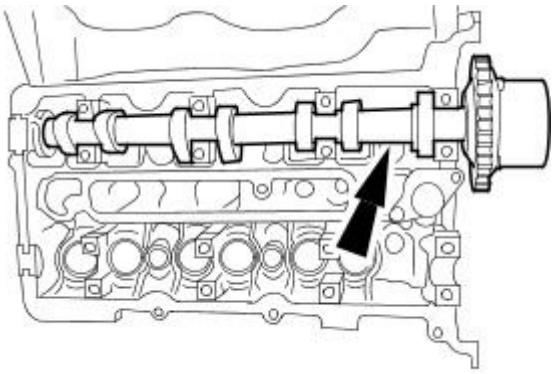

VUJ0002266

**29.** Install the RH inlet camshaft.

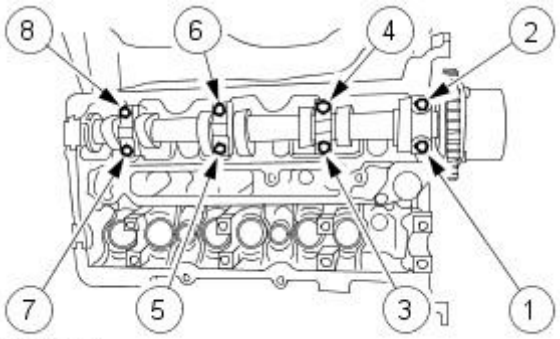


VUJ0002265

**30.** Install the RH inlet camshaft bearing cap bolts evenly.

- Install the inlet camshaft bearing caps.

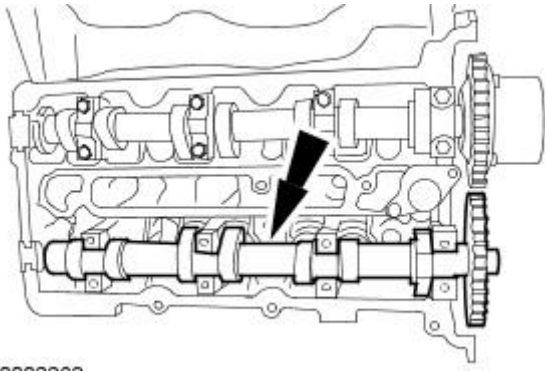

VUJ0002263

**31.** Install the RH exhaust camshaft.

GETtheMANUALS.org

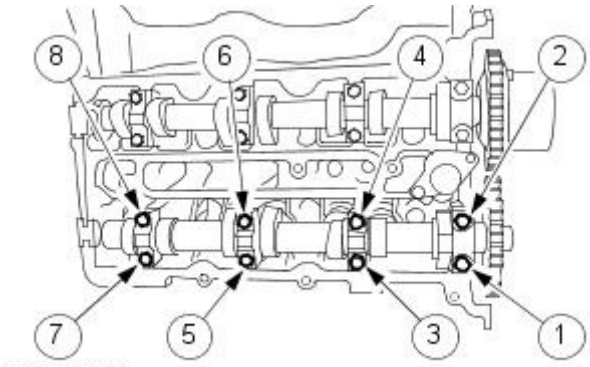

VUJ0002262

**32.** Install the RH exhaust camshaft bearing cap bolts evenly.

- Install the exhaust camshaft bearing caps.

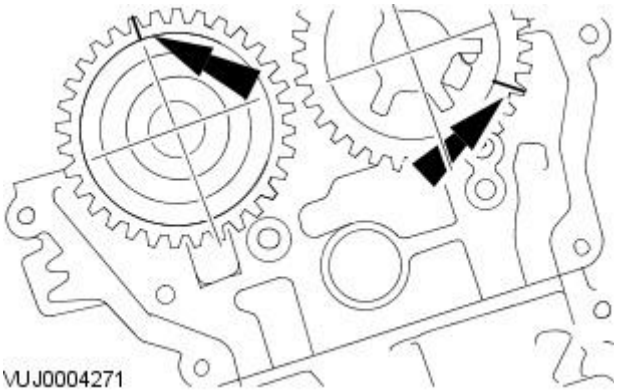
VUJ0004271

**33.** Rotate the right-hand intake camshaft clockwise until the camshaft sprocket alignment mark is at the 5 O'clock position and rotate the right-hand exhaust camshaft sprocket clockwise until the camshaft sprocket alignment mark is at the 12 O'clock position.

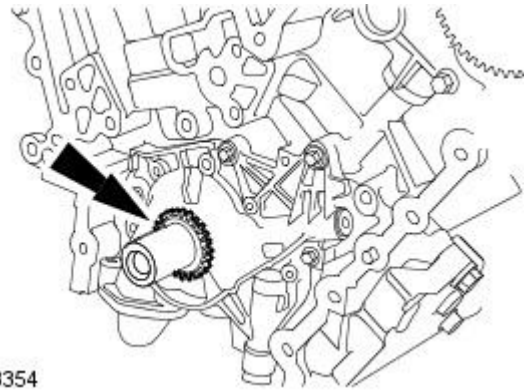
VUJ0003354

**34.** Install the crankshaft inner sprocket.

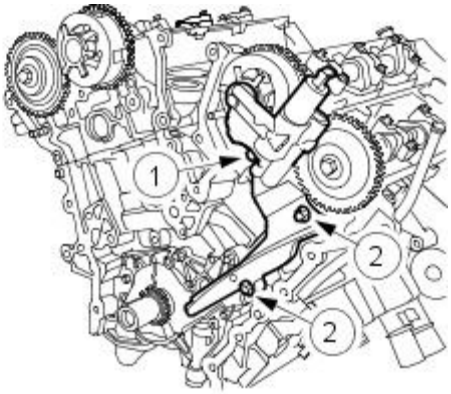

VUJ0003807

**35.** Install the left-hand timing chain outer guide.

- Tighten the retaining bolts in the sequence shown in two stages.
- Stage 1: Tighten bolt 1 to 25 Nm.
- Stage 2: Tighten bolts 2 to 25 Nm.

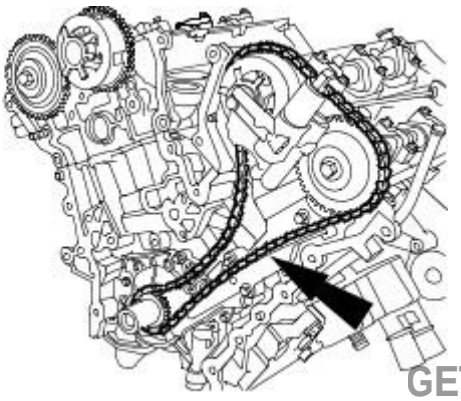
VUJ0003356

**36.** CAUTIONS:

Make sure the crankshaft keyway is at the 11 O'clock position, the alignment mark on the left-hand intake camshaft sprocket is at the 9 O'clock position and the alignment mark on the left-hand exhaust camshaft sprocket is at the 2 O'clock position.

Make sure the timing chain alignment marks are correctly positioned to the crankshaft sprocket and camshaft sprocket alignment marks.

Make sure the timing chain slack is on the tensioned side of the timing chain.

- Install the left-hand timing chain.

GETtheMANUALS.org

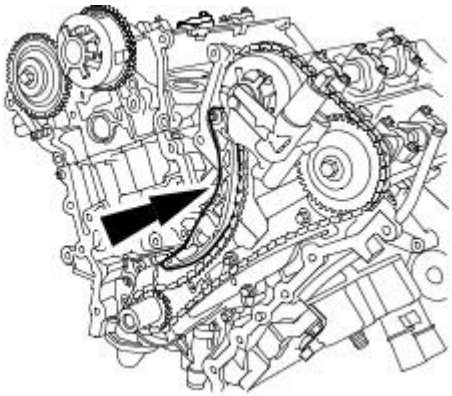

VUJ0003357

**37.** Install the left-hand timing chain inner guide.

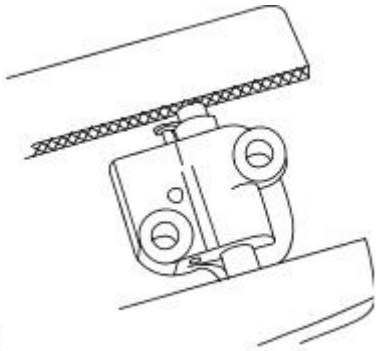

GA3138-B

**38.** CAUTION: Use suitable protective covers on the vice jaws to protect the timing chain tensioner.

Secure the left-hand timing chain tensioner in the vice jaws.

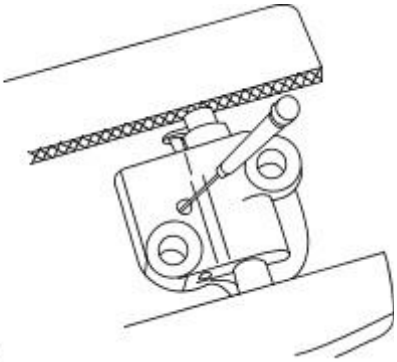

GA3139-B

**39.** CAUTION: During timing chain tensioner compression, do not release the ratchet stem until the timing chain tensioner piston is fully bottomed in its bore or damage to the ratchet stem will result.

Using a suitable tool, hold the left-hand timing chain tensioner ratchet lock mechanism away from the ratchet stem.

**40.** NOTE: The timing chain tensioner piston should retract with minimal force. If binding occurs, reposition the timing chain tensioner to eliminate side loading.

Slowly compress the left-hand timing chain tensioner.

**41.** NOTE: The retaining tool must remain in the timing chain tensioner until the timing chain tensioner is installed to the engine with the piston bottomed in the bore.

Using a suitable tool, retain the left-hand timing chain tensioner piston.

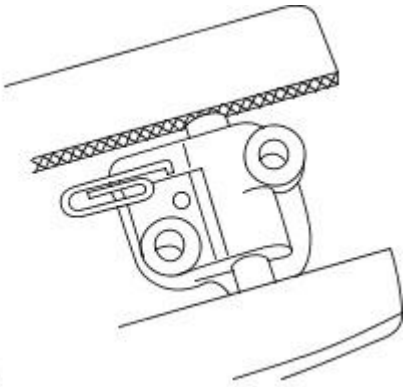

GA3140-A

GETtheMANUALS.org

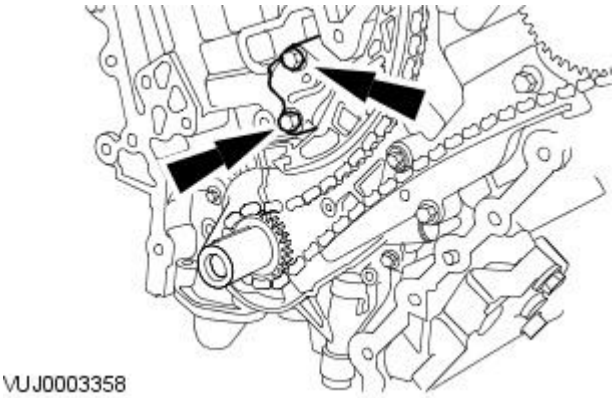


**42.** Install the left-hand timing chain tensioner.

- Tighten to 25 Nm.

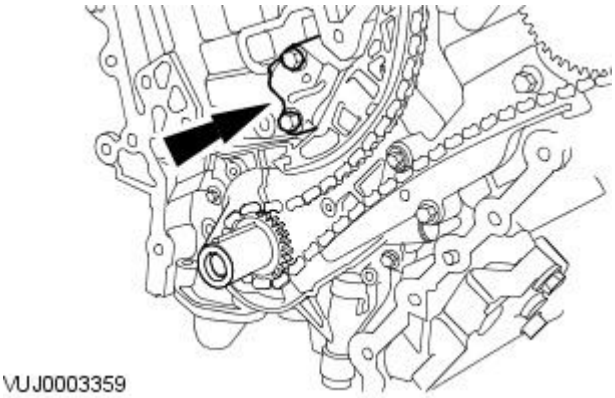


**43.** Release the tension in the left-hand timing chain tensioner.

- Remove the retaining tool.

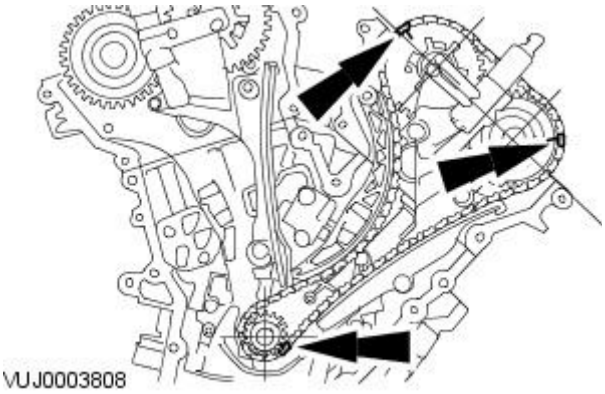


**44.** Make sure the left-hand timing chain alignment marks have remained correctly positioned to the camshaft sprocket and crankshaft sprocket alignment marks.

**45.** CAUTION: Do not rotate the crankshaft counterclockwise. The timing chains may bind causing engine damage.

Install the crankshaft pulley retaining bolt and washer.

**46.** CAUTION: Do not rotate the crankshaft counterclockwise. The timing chains may bind causing engine damage.

Rotate the crankshaft clockwise until the crankshaft keyway is at the 3 O'clock position.

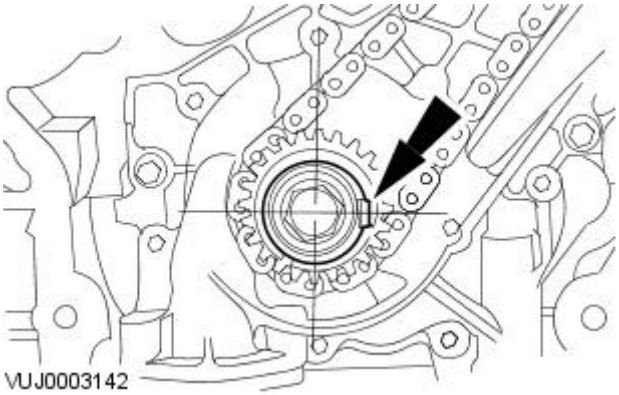


**47.** CAUTION: Do not rotate the crankshaft counterclockwise. The timing chains may bind causing engine damage.

Remove the crankshaft pulley retaining bolt and washer.

GETtheMANUALS.org

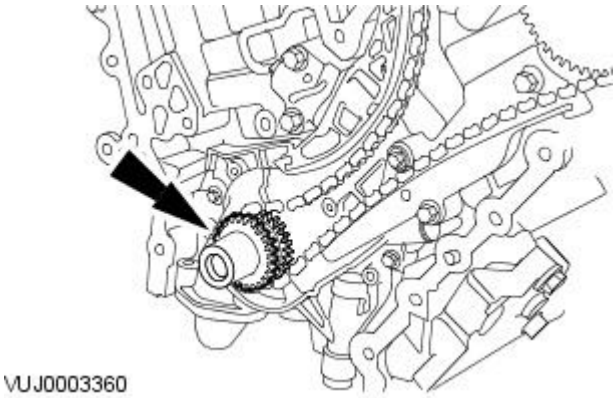


**48.** Install the crankshaft outer sprocket.

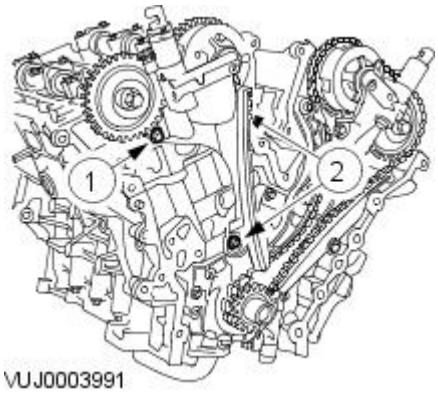


**49.** Install the right-hand timing chain inner guide.

- Tighten the retaining bolts in the sequence shown in two stages.
- Stage 1: Tighten bolt 1 to 25 Nm.
- Stage 2: Tighten bolts 2 to 25 Nm.

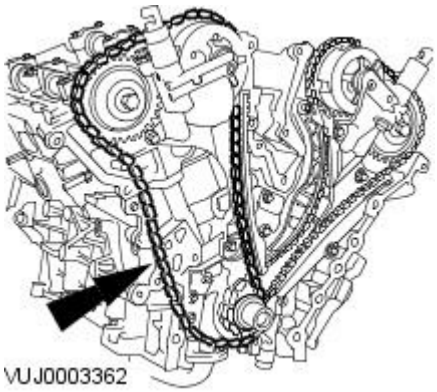


**50.** CAUTIONS:

Make sure the crankshaft keyway is at the 3 O'clock position, the alignment mark on the right-hand intake camshaft sprocket is at the 5 O'clock position and the alignment mark on the right-hand exhaust camshaft sprocket is at the 12 O'clock position.

Make sure the timing chain alignment marks are correctly positioned to the crankshaft sprocket and camshaft sprocket alignment marks.

Make sure the timing chain slack is on the tensioned side of the timing chain.

Install the right-hand timing chain.

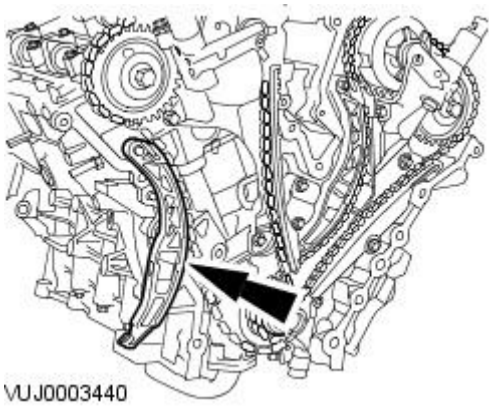


**51.** Install the right-hand timing chain outer guide.

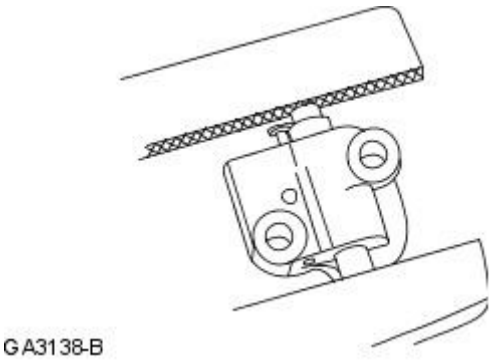


**52.** CAUTION: Use suitable protective covers on the vice jaws to protect the timing chain tensioner.

Secure the right-hand timing chain tensioner in the vice jaws.

GETtheMANUALS.org

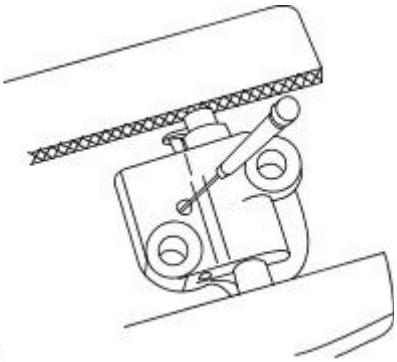

GA3139-B

**53.** CAUTION: During timing chain tensioner compression, do not release the ratchet stem until the timing chain tensioner piston is fully bottomed in its bore or damage to the ratchet stem will result.

Using a suitable tool, hold the right-hand timing chain tensioner ratchet lock mechanism away from the ratchet stem.

**54.** NOTE: The timing chain tensioner piston should retract with minimal force. If binding occurs, reposition the timing chain tensioner to eliminate side loading.

Slowly compress the right-hand timing chain tensioner.

**55.** NOTE: The retaining tool must remain in the timing chain tensioner until the timing chain tensioner is installed to the engine with the piston bottomed in the bore.

Using a suitable tool, retain the right-hand timing chain tensioner piston.

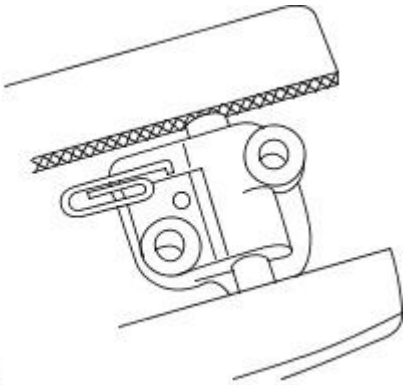

GA3140-A

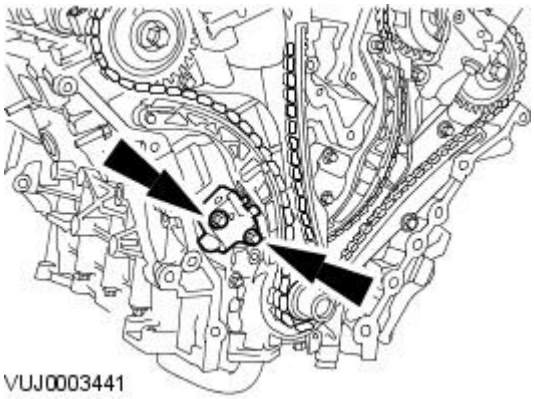

VUJ0003441

**56.** Install the right-hand timing chain tensioner.

- Tighten to 25 Nm.

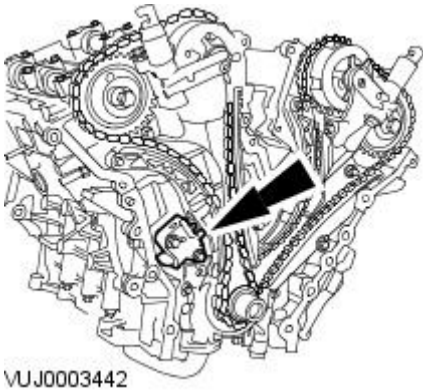

VUJ0003442

**57.** Release the tension in the right-hand timing chain tensioner.

- Remove the retaining tool.

GETtheMANUALS.org

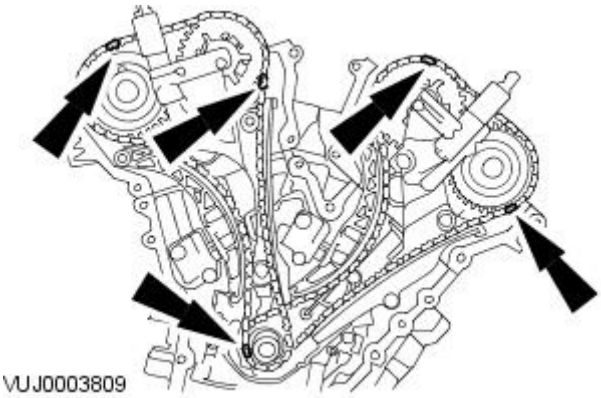


**58.** CAUTION: Make sure the right-hand timing chain alignment marks have remained correctly positioned to the camshaft sprocket and crankshaft sprocket alignment marks.

Make sure all the timing chain alignment marks are in the positions shown.

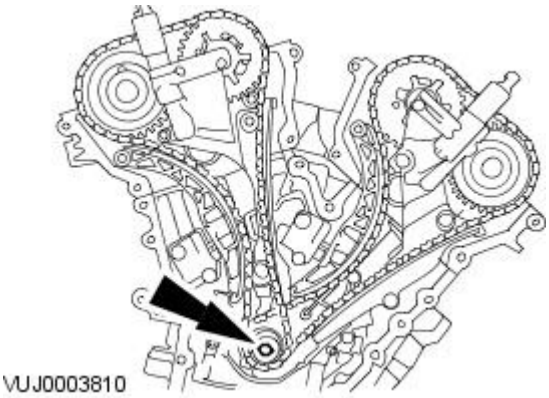


**59.** CAUTION: Do not rotate the crankshaft counterclockwise. The timing chains may bind causing engine damage.

Install the crankshaft pulley retaining bolt and washer.

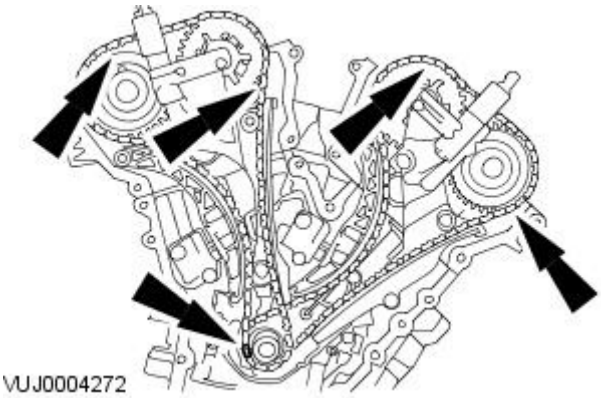


**60.** CAUTION: Do not rotate the crankshaft counterclockwise. The timing chains may bind causing engine damage.

Check the engine valve timing is correctly set.

- Rotate the crankshaft two complete turns clockwise. Make sure the alignment marks on the camshaft sprockets are in the positions shown when the crankshaft keyway is at the 11 O'clock position.

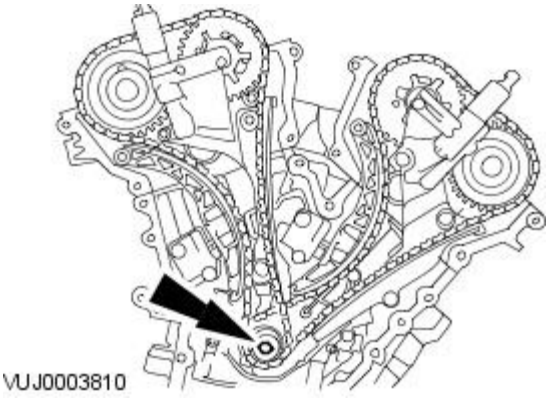


**61.** CAUTION: Do not rotate the crankshaft counterclockwise. The timing chains may bind causing engine damage.

Remove the crankshaft pulley retaining bolt and washer.

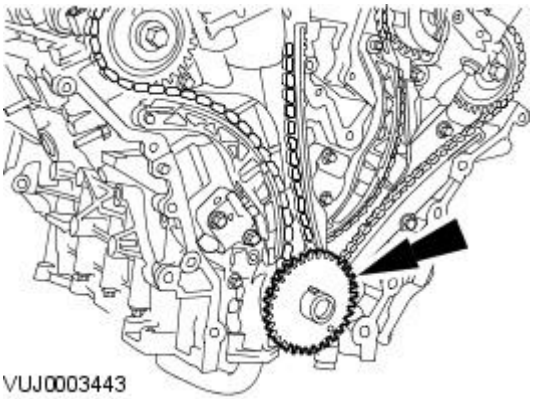


**62.** NOTE: Make sure the CKP sensor pulse wheel is correctly installed with the teeth pointing outwards.

Install the CKP sensor pulse wheel.

GETtheMANUALS.org

**63.** Carry out a valve clearance check.
For additional information, refer to Valve Clearance Check in this section.

**64.** Install new front timing cover gaskets.

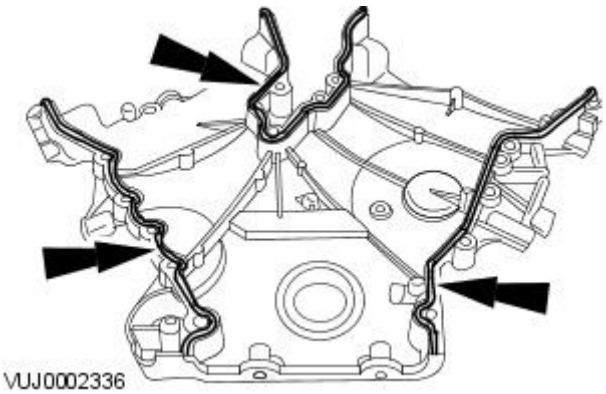


**65.** NOTE: Prior to applying sealer clean the front cover to engine block and cylinder head sealing surfaces with metal surface cleaner.

Apply a 6 mm diameter dot of silicone sealant meeting Jaguar specification to the indicated locations.

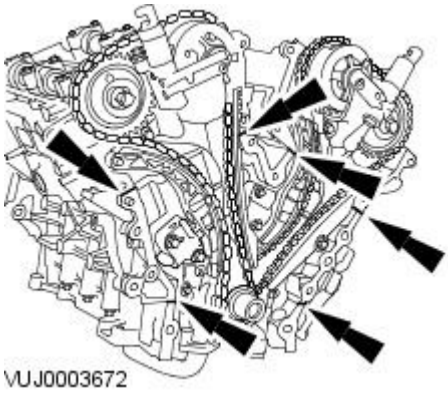


**66.** NOTE: The engine front cover retaining bolts numbered 3,4,10 and 11 are longer than the retaining bolts numbered 1,2,5,6,7,8,9,12,13,15 and 16. The retaining bolt numbered 14 is a retaining bolt with a stud head.

Install the engine front cover, completing the tightening sequence .

- Tighten to 25 Nm.

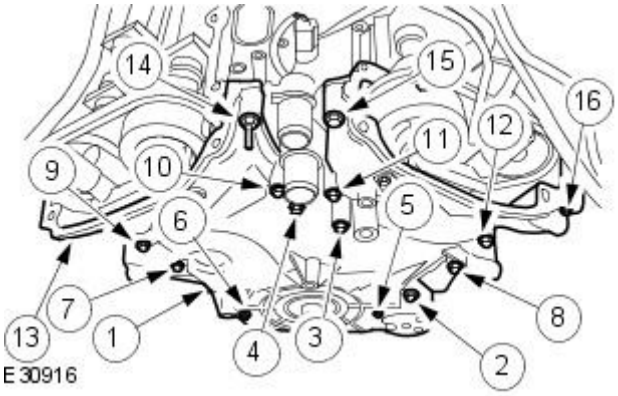


**67.** NOTE: Apply an 10 mm dot of silicone gasket and sealant meeting Jaguar specification to the engine block and front cover mating surface.

• NOTE: Loosely install the oil pan to transmission housing bolts.

• NOTE: Tighten all oil pan retaining bolts with in six minutes of applying the sealer.

Install the oil pan rear retaining bolts.

- Complete the tightening sequence.
- Tighten to 25 Nm.

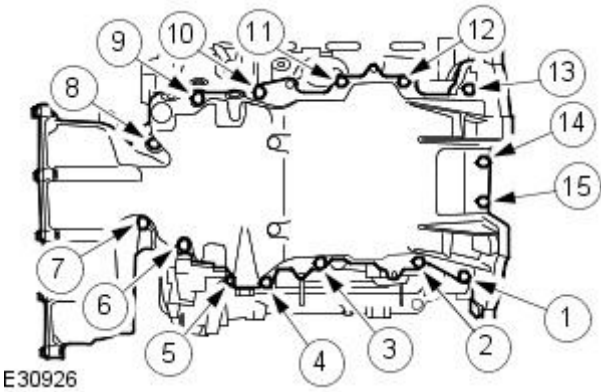


GETtheMANUALS.org

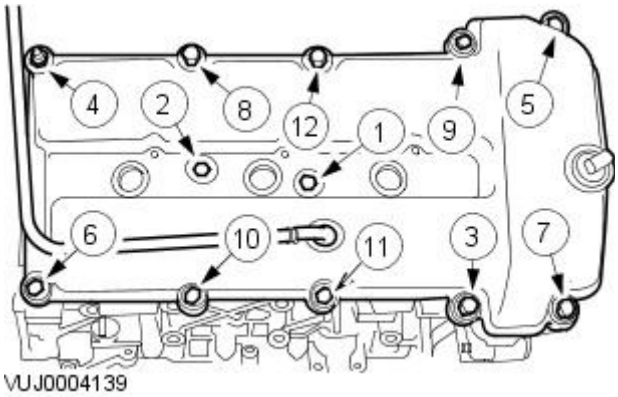


**68.** NOTE: Right-hand shown, left-hand similar.

Install the valve covers.

- Complete the tightening sequence.
- Tighten to 10 Nm.

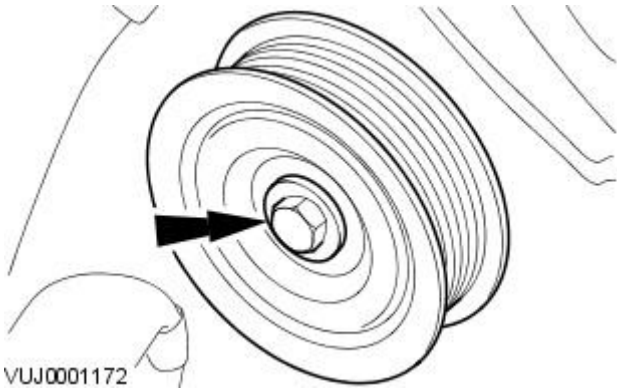


**69.** Install the left-hand idler pulley.

- Tighten to 25 Nm.

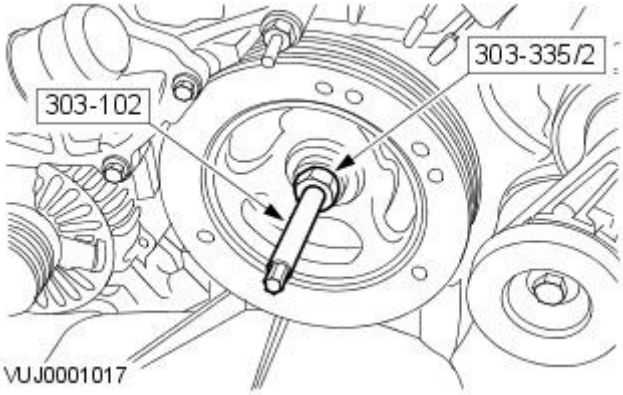


**70.** Using the special tools, install the crankshaft pulley.

- Coat the crankshaft pulley keyway with silicone gasket sealant meeting Jaguar specification.
- Coat the sealing surfaces of the crankshaft pulley with silicone gasket sealant meeting Jaguar specification.

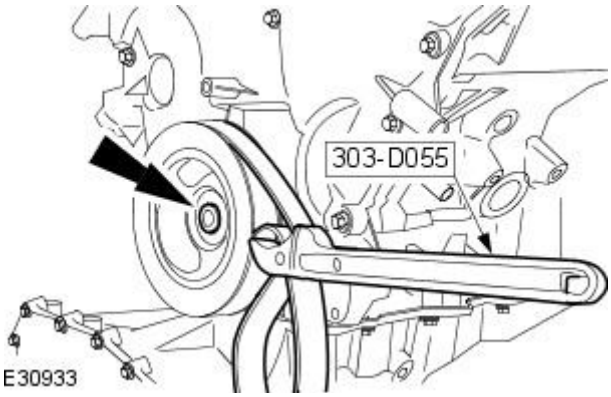


**71.** Install the crankshaft pulley retaining bolt.

- Torque to 120 Nm.
- Loosen the bolt (minimum 1 turn).
- Torque to 50 Nm.
- Angle Torque to 90°.

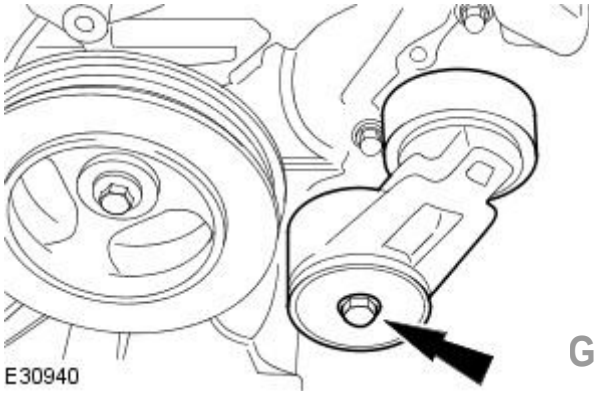


**72.** Install the accessory drive belt tensioner.

- Tighten 45 Nm.

GETtheMANUALS.org

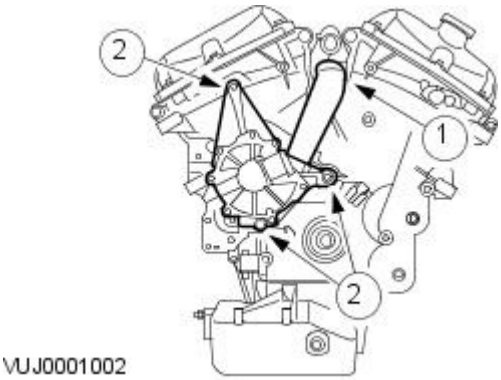


**73.** Install the water pump and coolant hose assembly.

1. Attach the hose.
2. Install the water pump and coolant hose assembly.

- Tighten to 25 Nm.

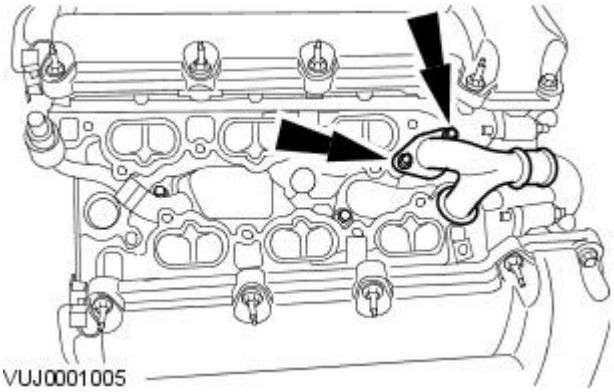


**74.** NOTE: Install new coolant crossover O-ring seals.

Install the coolant crossover tube.

- Tighten to 10 Nm,

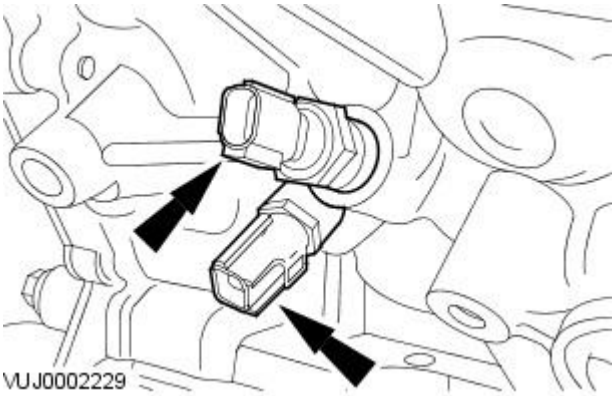


**75.** Install the engine oil pressure and oil temperature sensors.

- Tighten to 14Nm.

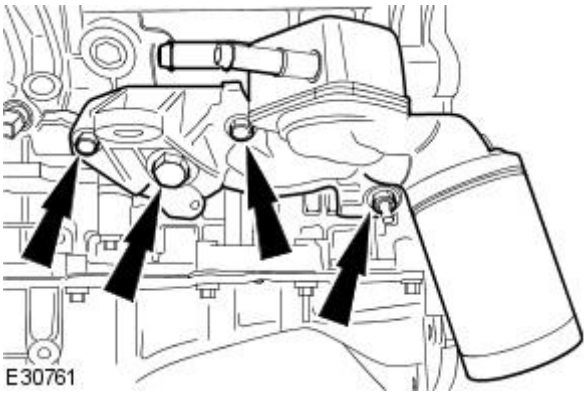


**76.** NOTE: Install new O-ring seals.

Install the oil filter housing assembly.

- Tighten all oil filter housing retaining bolts to 25 Nm.

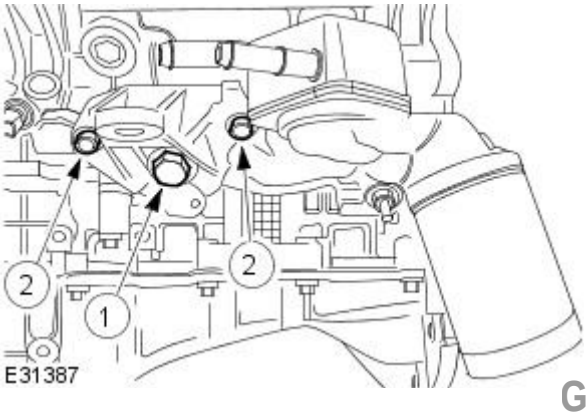


**77.** Tighten the oil filter housing assembly retaining bolts in sequence.

1. Tighten to 150 Nm.
2. Tighten to 40 Nm + 90 degrees.

GETtheMANUALS.org

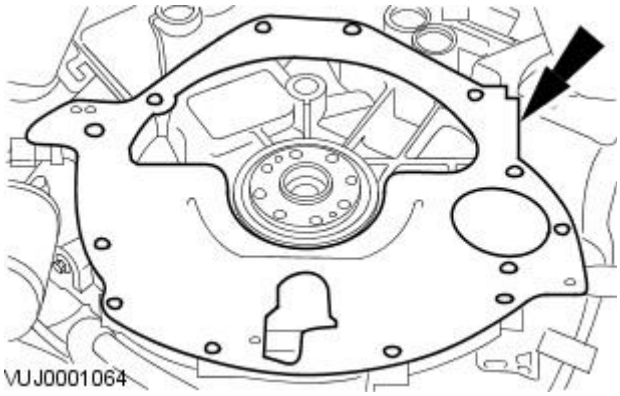


**78.** Install the engine rear backing plate.

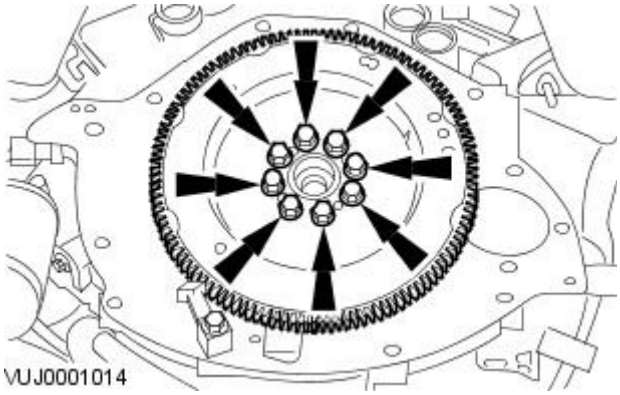


**79.** Install the flywheel.

- Prevent the engine from rotating.
- Tighten to 80 Nm.

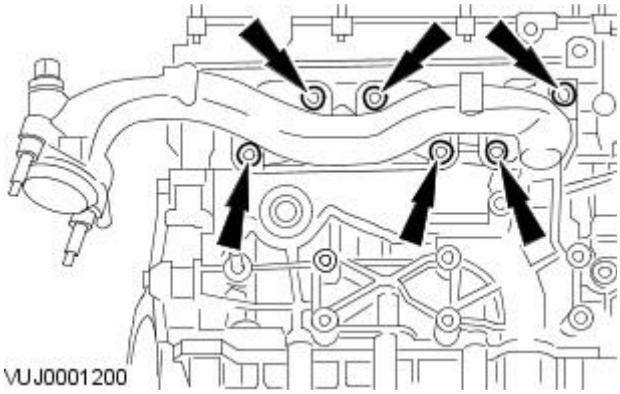


**80.** NOTE: Right-hand shown, Left-hand similar.

Install the exhaust manifolds.

- Tighten to 25 Nm.

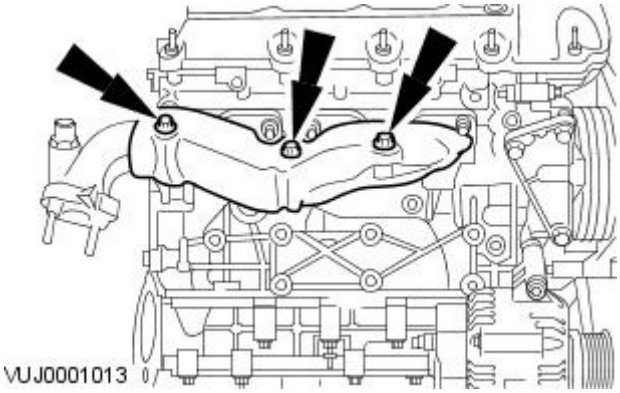


**81.** NOTE: Right-hand shown, Left-hand similar.

Install the exhaust manifold heat shields.

- Tighten to 10 Nm.

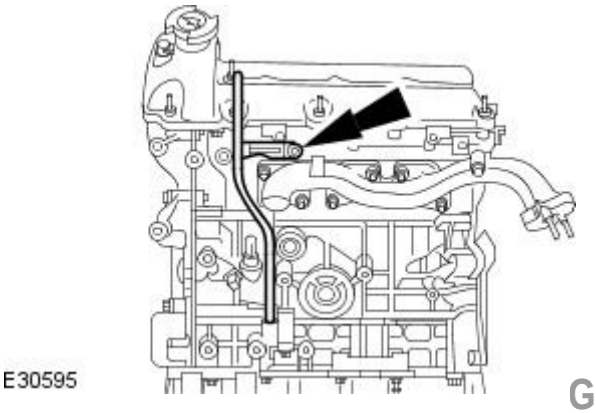


**82.** NOTE: Install a new O-ring seal.

Install the oil level indicator tube.

GETtheMANUALS.org

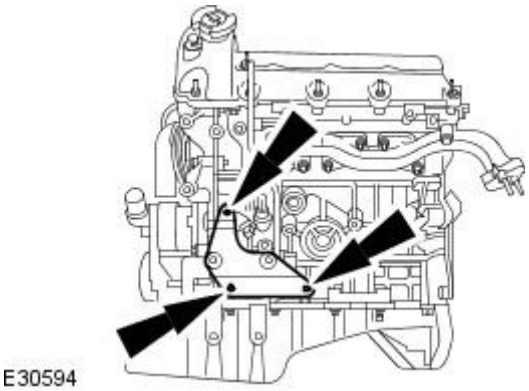


**83.** Install the A/C compressor mounting bracket.

- Tighten to 25 Nm.

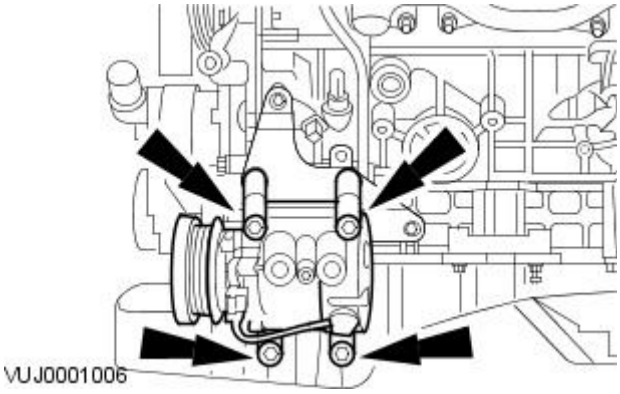


**84.** Install the air conditioning (A/C) compressor.

- Tighten to 25 Nm.

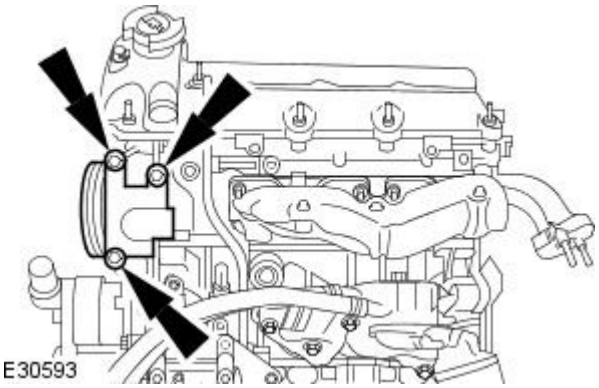


**85.** Install the power steering pump.

- Tighten to 25 Nm.

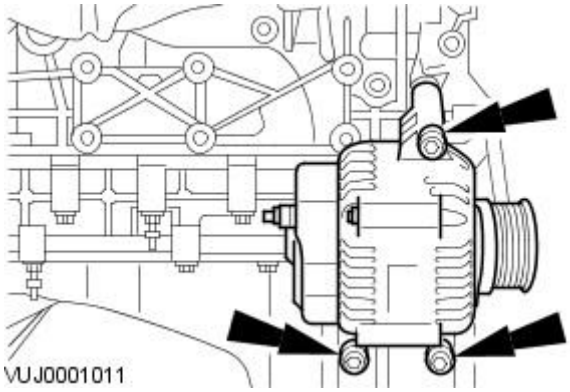


**86.** Install the generator.

- Tighten to 48 Nm.

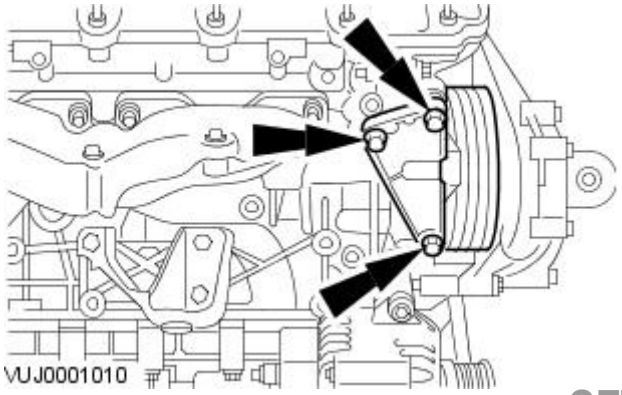


**87.** Install the right-hand idler pulley.

- Tighten to 25 Nm.

GETtheMANUALS.org

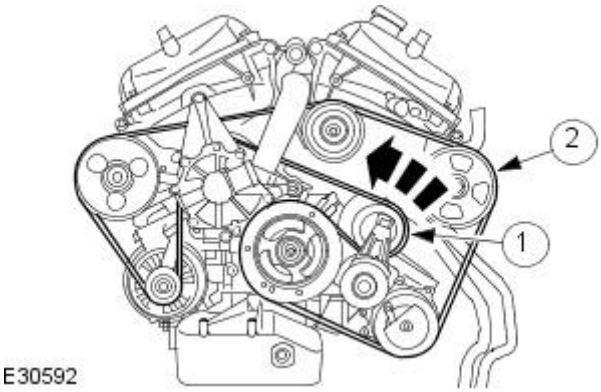


**88.** Install the accessory drive belt.

1. Use a 3/8 inch drive bar to release the accessory drive belt tensioner.
2. Install the accessory drive belt.

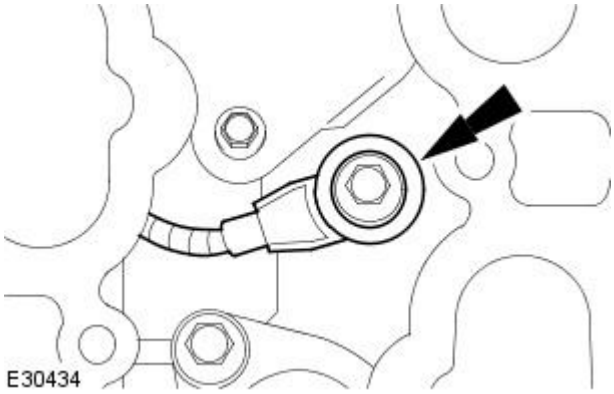


**89.** Install the left-hand knock sensor.

- Tighten to 25 Nm.

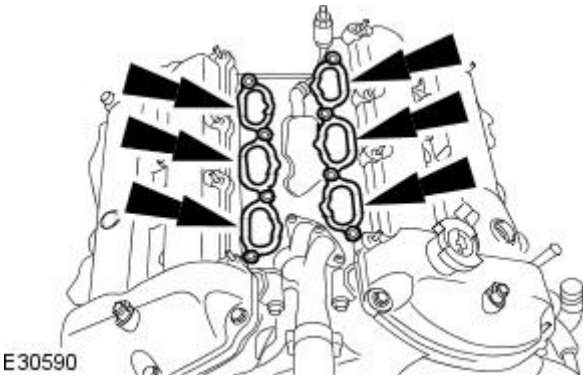


**90.** Install new lower intake manifold gaskets.

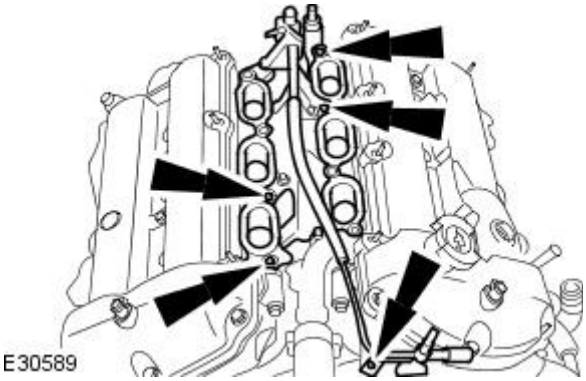


**91.** Install the lower intake manifold and injector supply manifold.

- Tighten to 10 Nm.

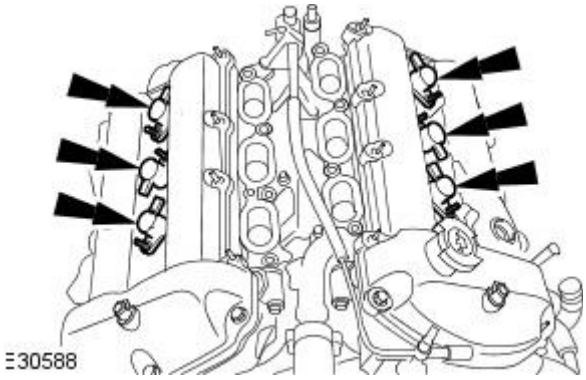


**92.** Install the ignition coils.

- Tighten to 10 Nm.

GETtheMANUALS.org

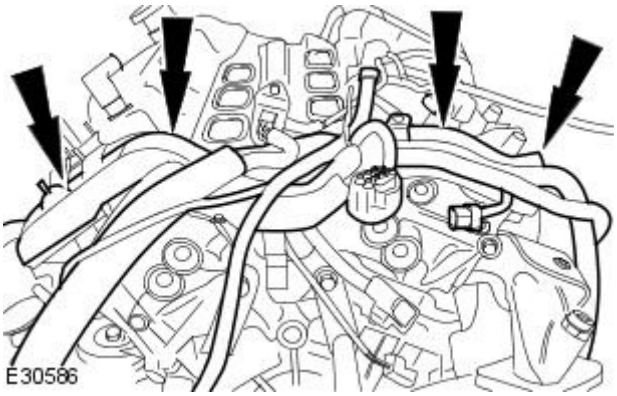


**93.** Install the engine wiring harness.

- Tighten to 10 Nm.

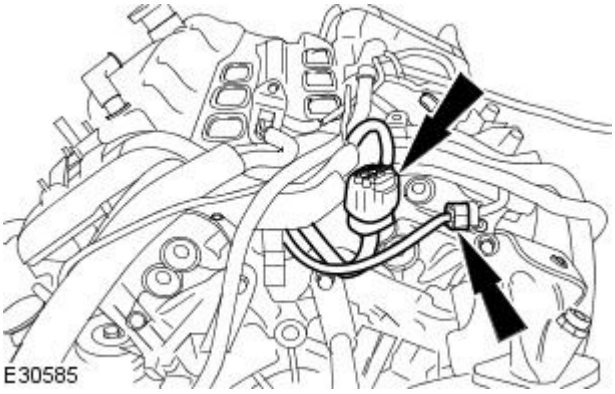


**94.** Connect the engine wiring harness electrical connectors.

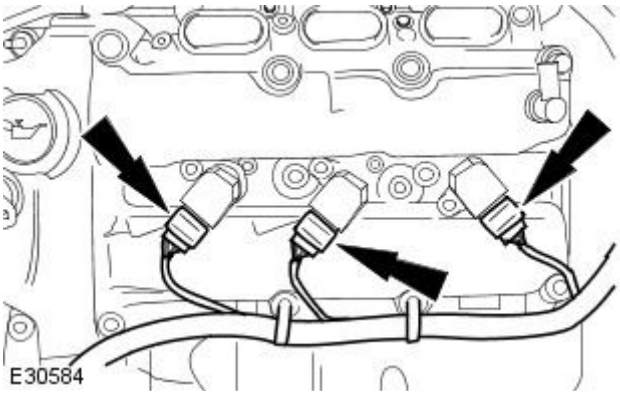


**95.** Connect the left-hand ignition coils.

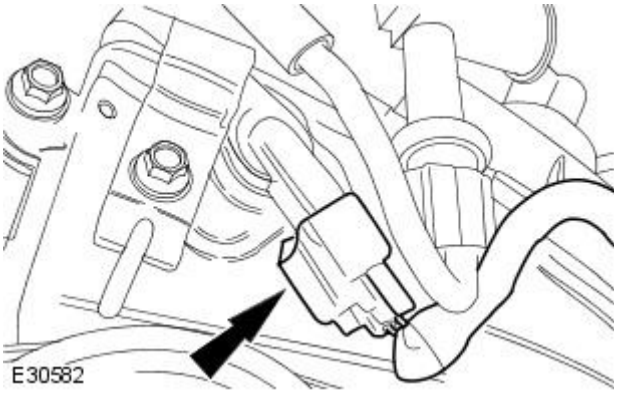


**96.** Connect the left-hand camshaft position sensor.

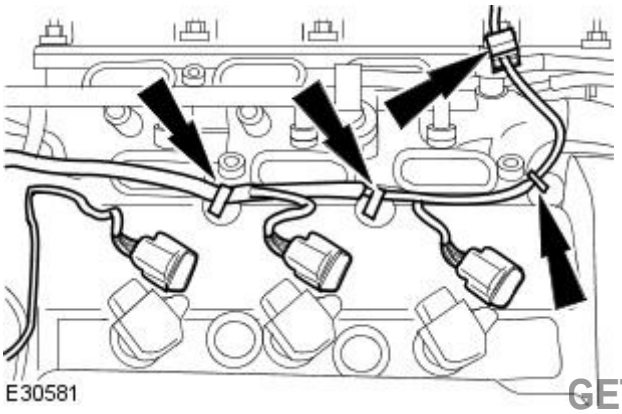


**97.** Attach the engine harness.

GETtheMANUALS.org

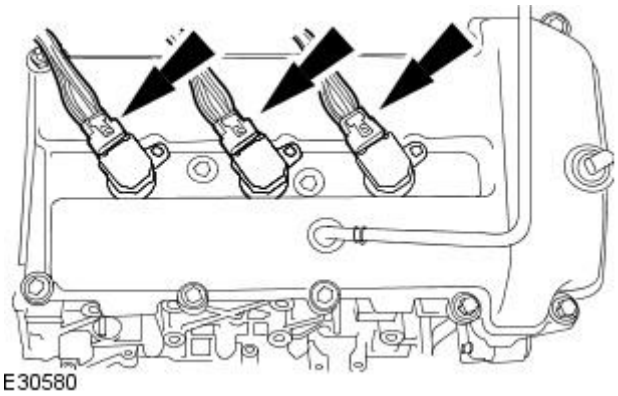


**98.** Connect the right-hand ignition coils.

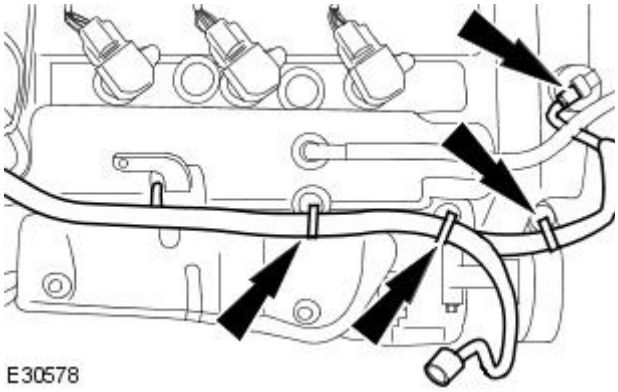


**99.** Attach the engine harness.

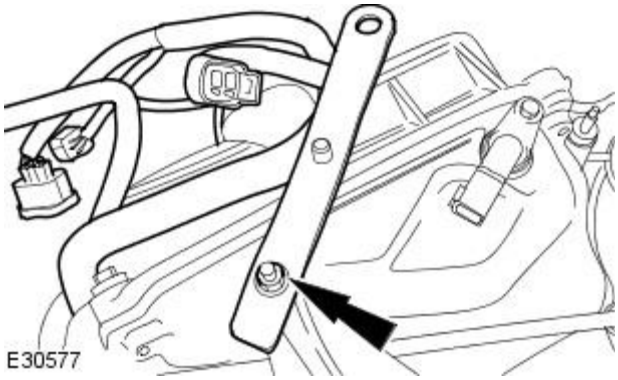


**100.** Attach the engine harness retaining bracket.

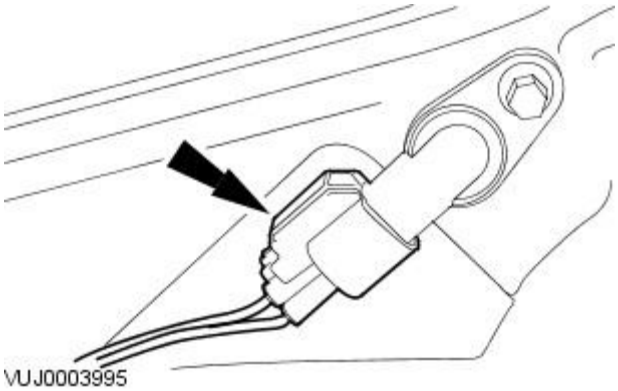


**101.** Disconnect the right-hand camshaft position sensor.

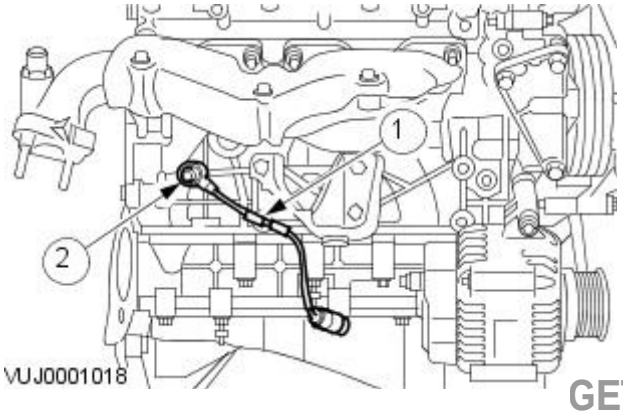


**102.** Install the rear knock sensor.

1. Attach the knock sensor wiring harness.
2. Install the rear knock sensor.

- Tighten to 25 Nm.

GETtheMANUALS.org

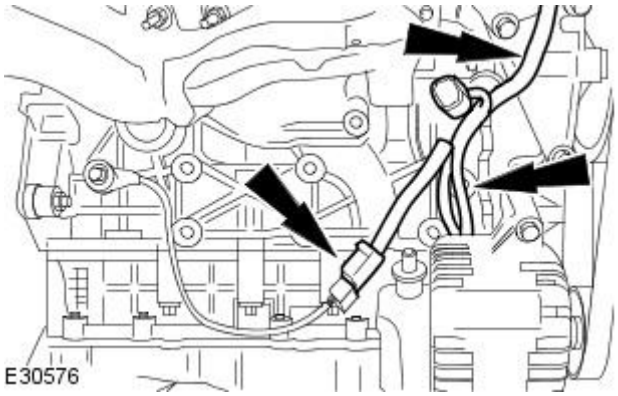


**103.** Attach engine harness.

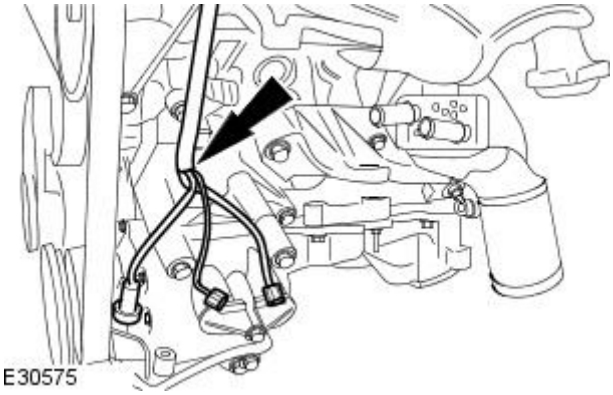


**104.** Attach the engine harness.

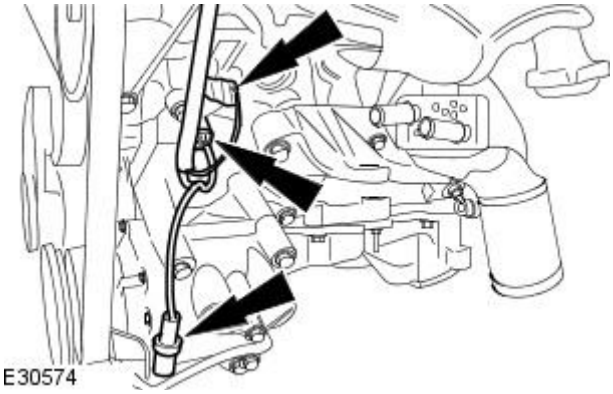


**105.** Connect the electrical connectors.

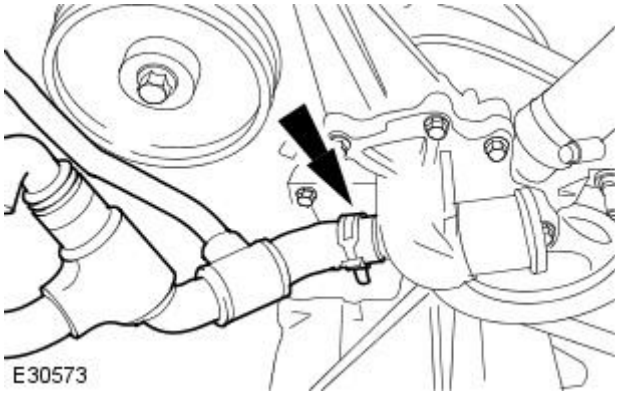


**106.** Install the coolant hose.

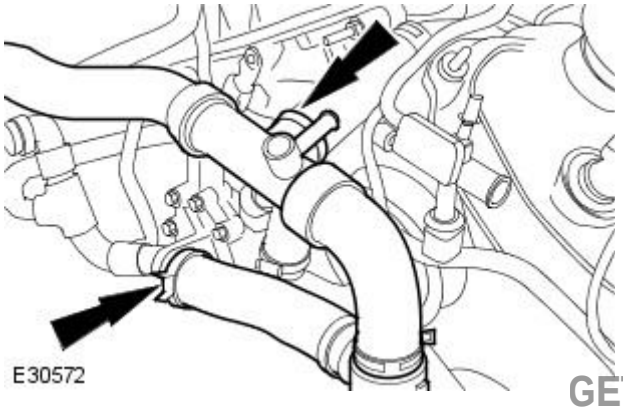


**107.** Install the coolant hose.

GETtheMANUALS.org

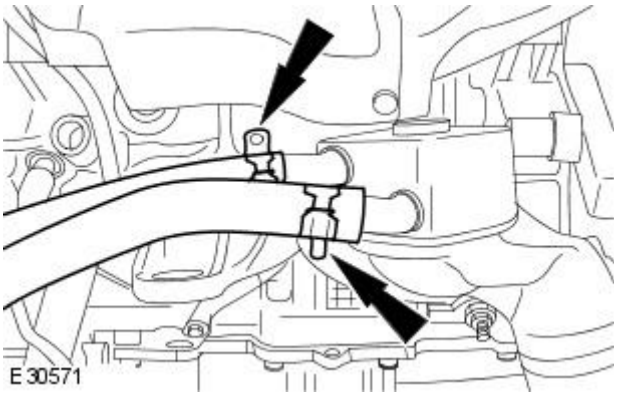


**108.** Connect the oil cooler coolant hoses.

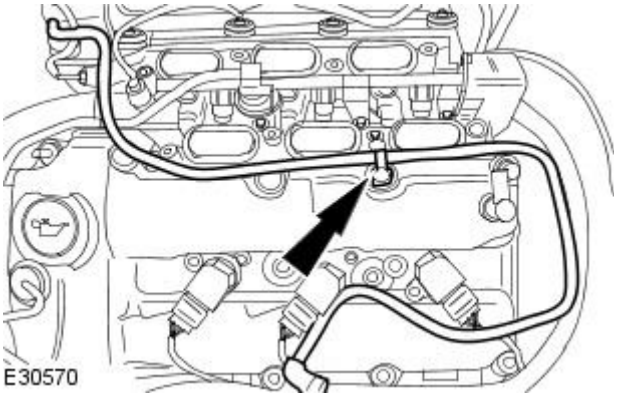


**109.** Install the evaporative emission purge valve hose.

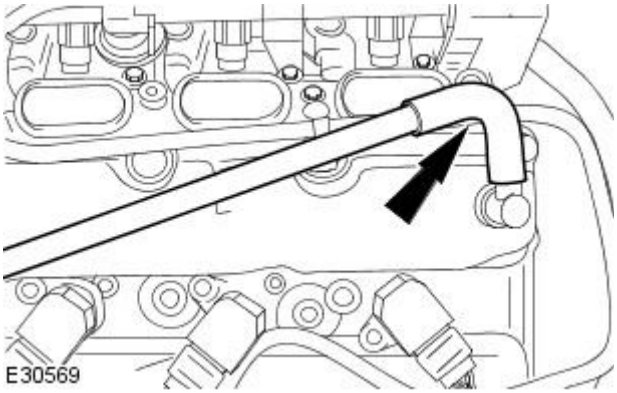


**110.** Install the engine breather hose.

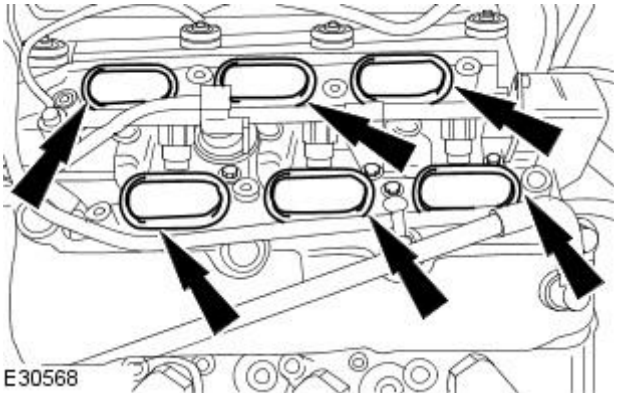


**111.** Install new intake manifold gaskets.

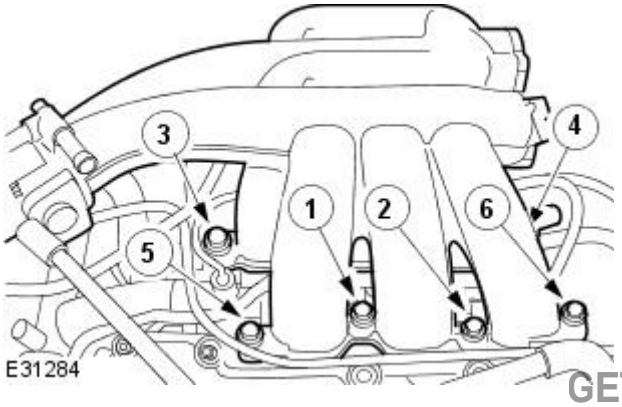


**112.** NOTE: The intake manifold retaining bolts in position 1,2,3 and are longer than the retaining bolts in position 4,5 and 6.

To install, reverse the removal procedure.

- Install new intake manifold gaskets.
- Tighten to 10 Nm.

GETtheMANUALS.org

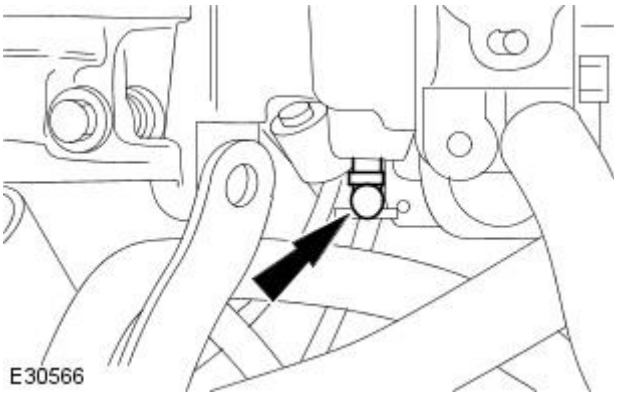


**113.** Connect the evaporative emission canister purge valve transfer pipe.

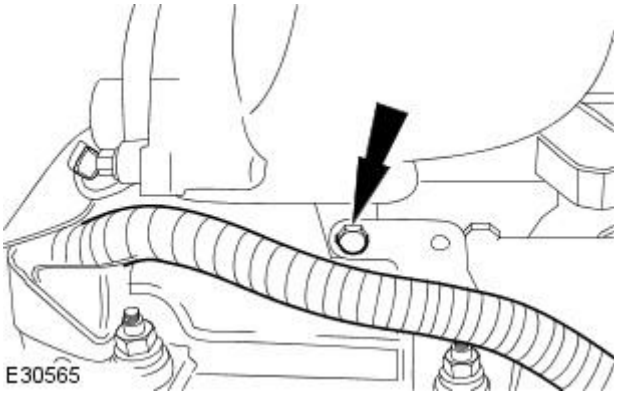


**114.** Attach the intake manifold rear retaining bracket.

- Tighten to 10 Nm.

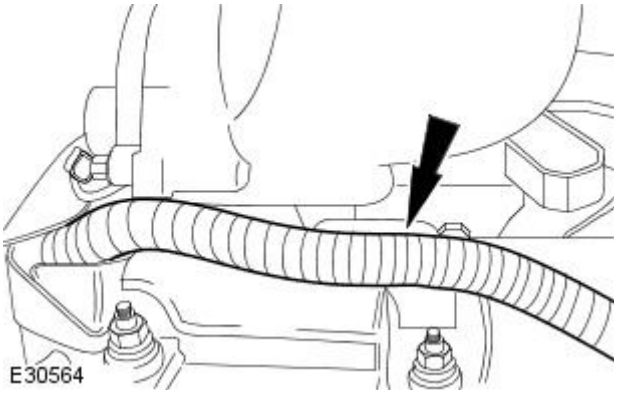


**115.** Attach the engine wiring harness from the intake manifold rear retaining bracket.

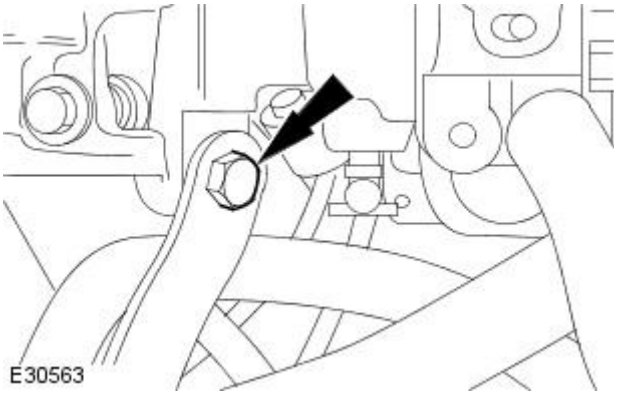


**116.** Attach the intake manifold front retaining bracket.

- Tighten to 10 Nm.

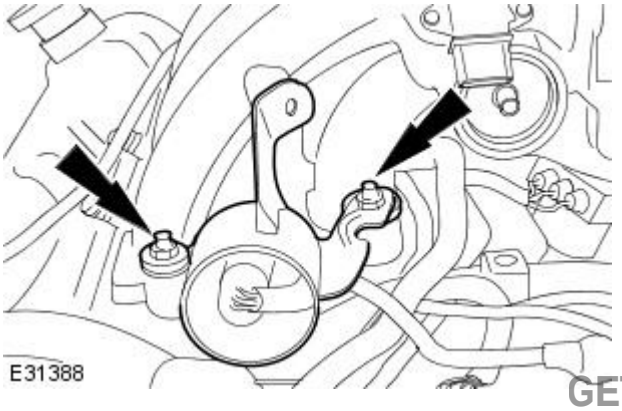


**117.** Install the fuel pressure regulator bracket.

- Tighten to 10 Nm.

GETtheMANUALS.org

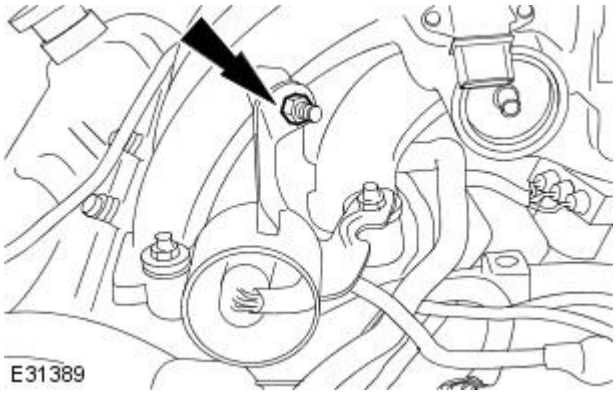


**118.** Tighten to 7 Nm.

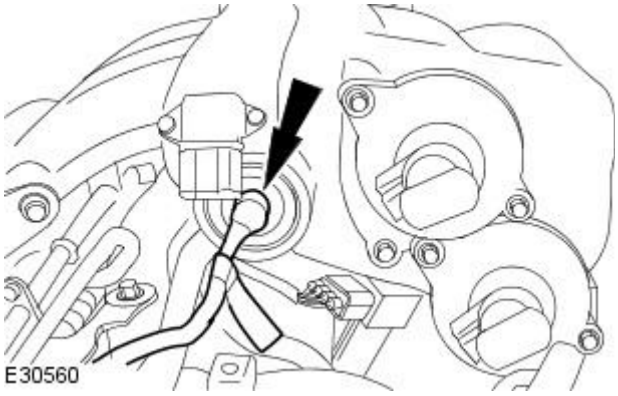


**119.** Connect the fuel pressure regulator vacuum hose.

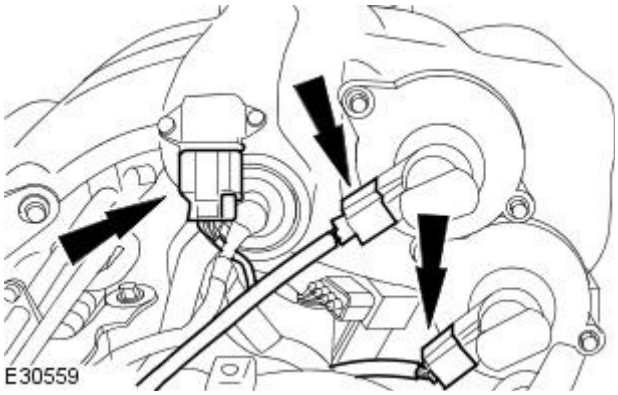


**120.** Connect the electrical connectors.

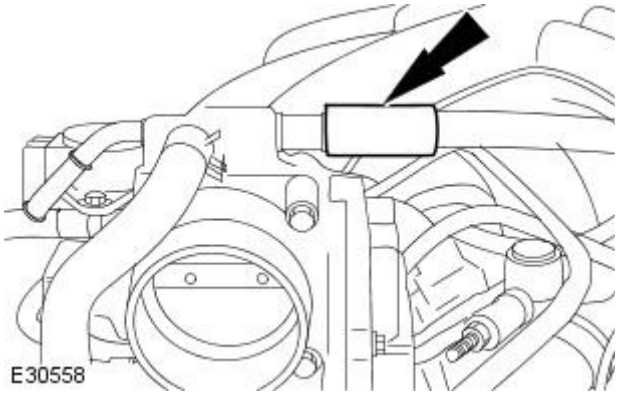


**121.** Connect the positive crankcase ventilation (PCV) hose.

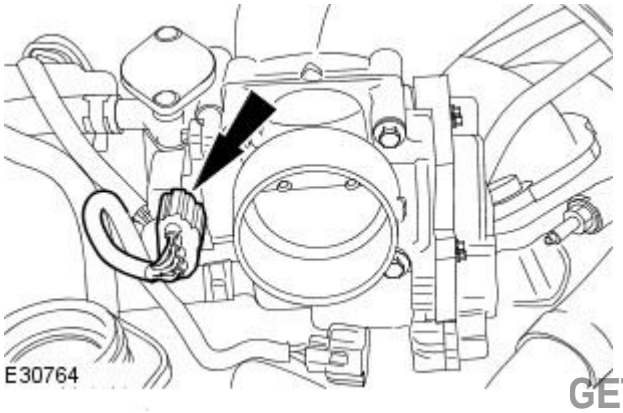


**122.** Connect the throttle position sensor.

GETtheMANUALS.org

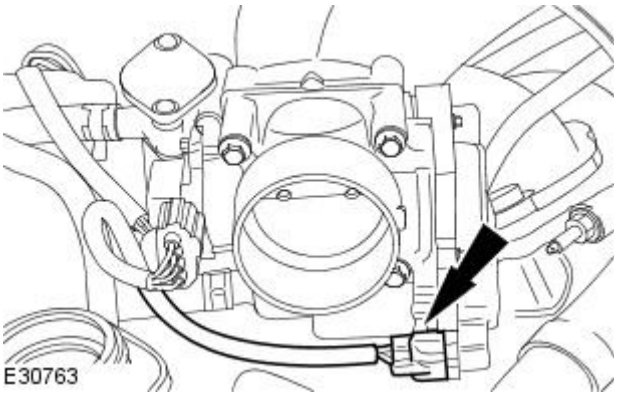


**123.** Connect the throttle motor electrical connector.

GETtheMANUALS.org

# Engine - 2.5L NA V6 - AJV6 / 3.0L NA V6 - AJ27 - Engine

Installation

| Special Tool(s) | |
|---|---|
| 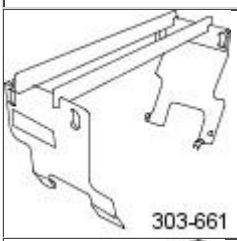 303-661 | Engine lifting Bracket<br><br>303-661 |
| 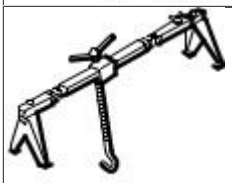 303-021 | Engine Support Bracket<br><br>303-021 |
| 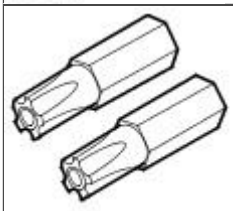 418-535 | 5 point security torx bit<br><br>418-535 |

## Installation

All Vehicles

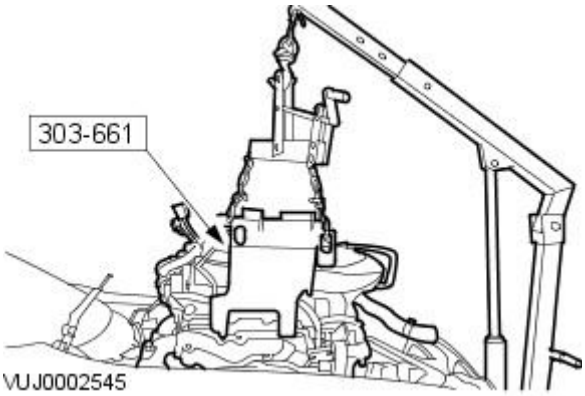


**1.** NOTE: Make sure all wiring harnesses and oil pipes are suitably positioned for engine installation.

Install the engine assembly.

- Make sure engine mounts are correctly located
- Remove the floor Crane.

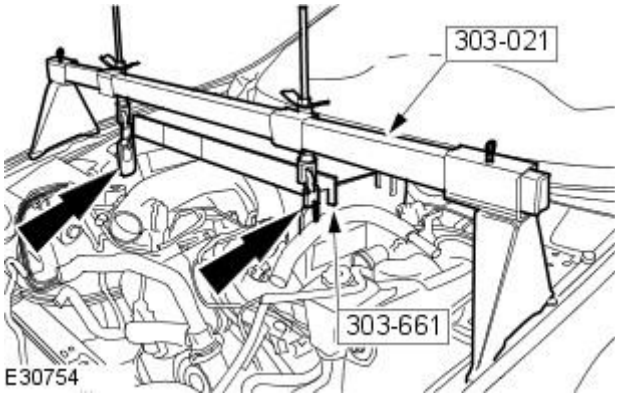


**2.** Install the special tool.

**3.** Raise the vehicle.

Vehicles With Automatic Transmission

GETtheMANUALS.org

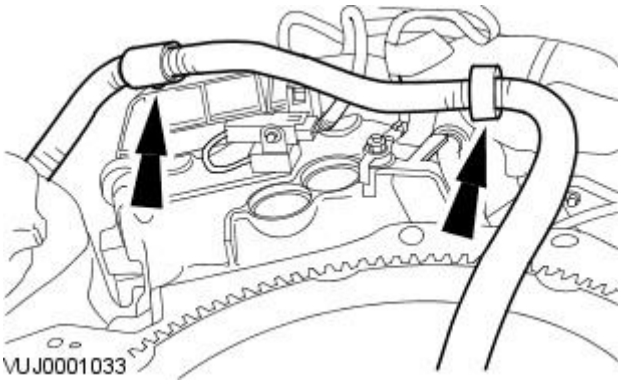


**4.** Attach the automatic transmission wiring harness.

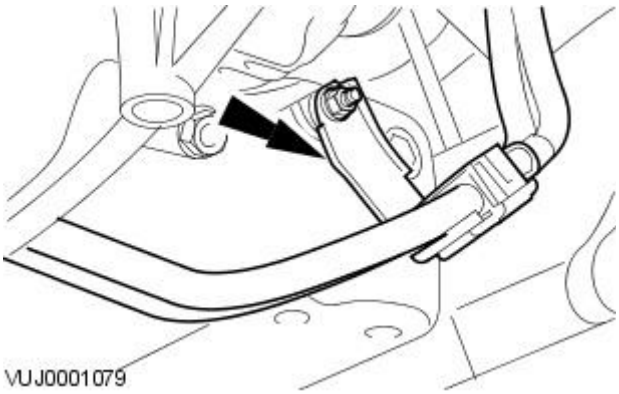


**5.** Attach the automatic transmission oil cooler tubes bracket.

- Tighten to 10 Nm.

All Vehicles

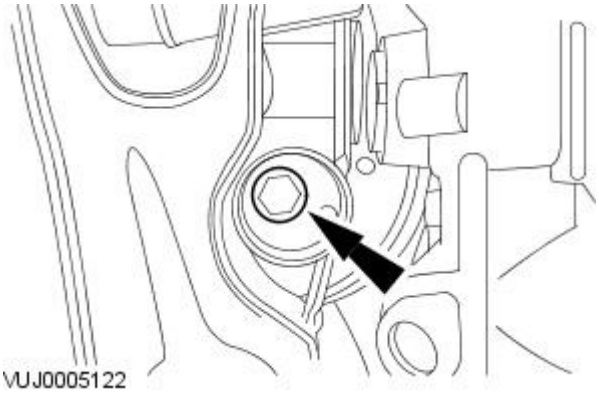


**6.** NOTE: Left-hand engine mount lower retaining bolt shown, right-hand similar.

Install the engine mounts lower retaining bolts.

- Tighten to 63 Nm.

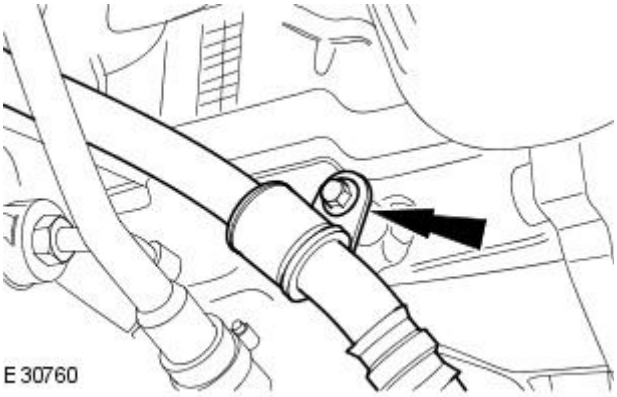


**7.** Attach the power steering hose.

- Tighten to 10 Nm.

**8.** NOTE: Un-cap the exposed ports.

Install new A/C compressor O-ring seals.

- Lubricate the new 0-rings with A/C refrigerant oil.

GETtheMANUALS.org

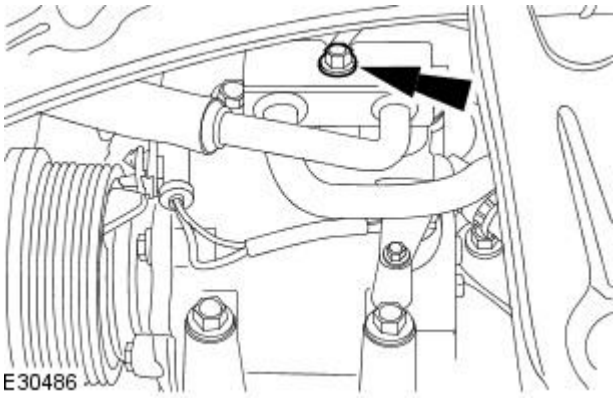


**9.** Connect the A/C compressor supply and return lines.

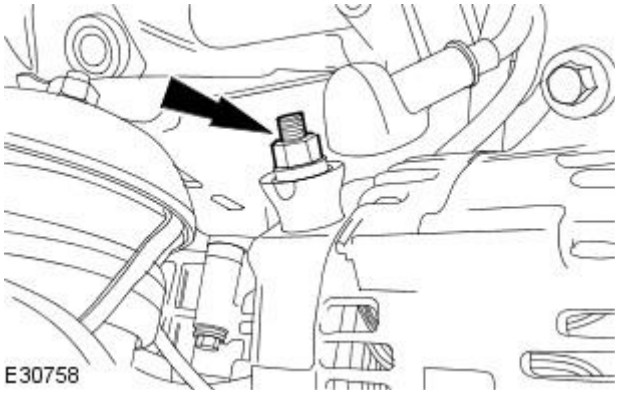


**10.** Install the battery positive cable retaining nut.

- Tighten to 12 Nm.

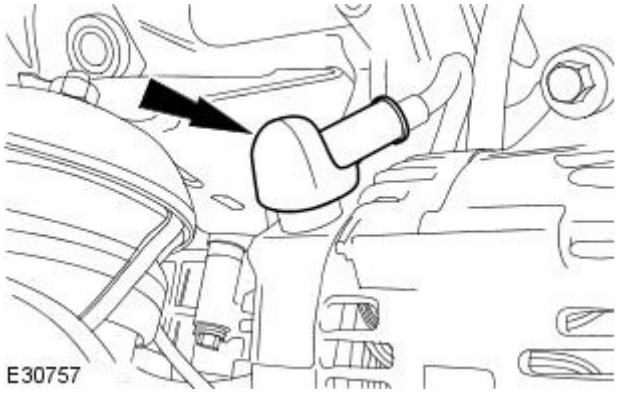


**11.** Attach the generator battery positive cable protective cover.

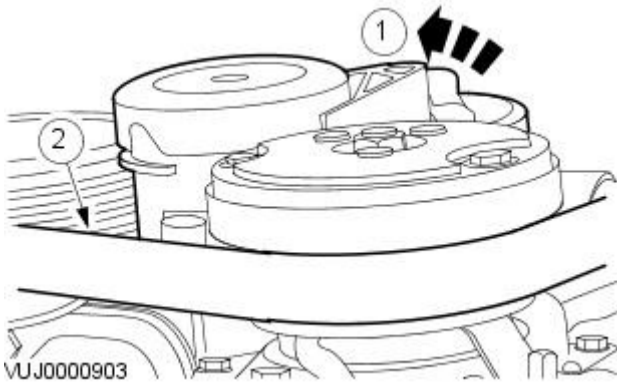


**12.** Attach the accessory drive belt.

1. Rotate the accessory drive belt tensioner counter-clockwise.
   1. Use a 3/8 inch square drive bar to rotate the accessory drive belt tensioner.
2. Attach the accessory drive belt.

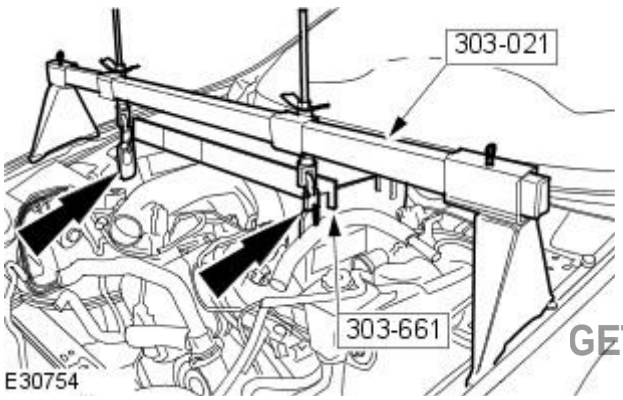


**13.** Lower the vehicle.

**14.** Remove the special tool.

GETtheMANUALS.org

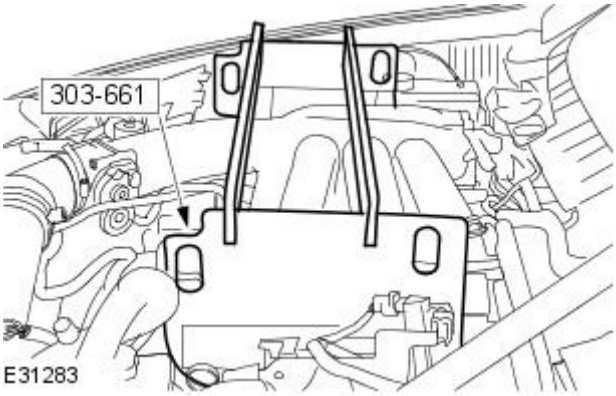


**15.** Remove the special tool.

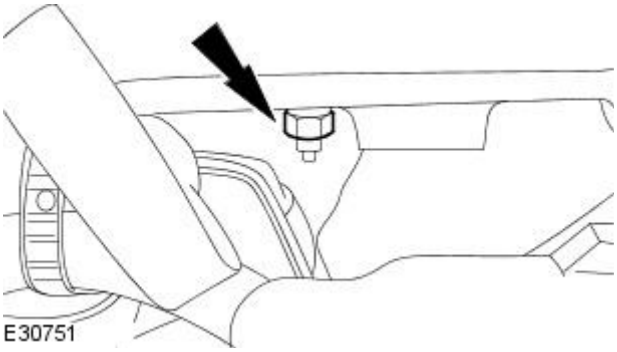


**16.** NOTE: Left-hand shown, Right-hand similar.

Install the exhaust manifold retaining nut.

- Tighten to 25 Nm.

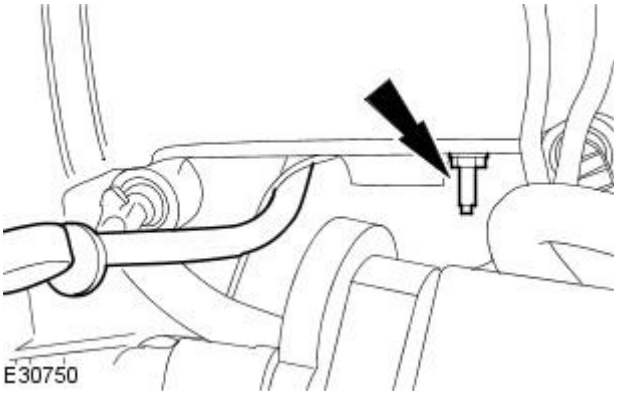


**17.** Install the dipstick tube retaining bolt.

- Tighten to 10 Nm.

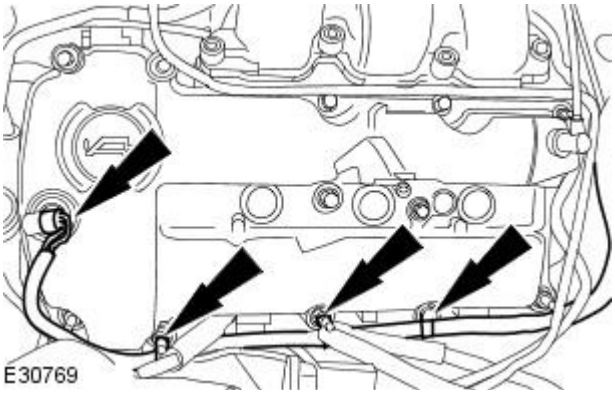


**18.** Attach the left-hand valve cover wiring harness.

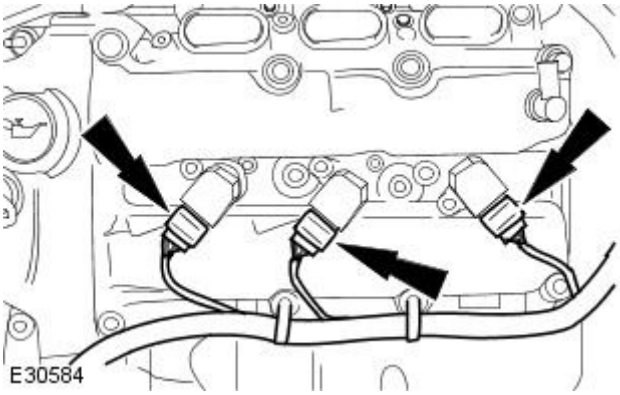


**19.** Connect the left-hand ignition coils electrical connectors.

GETtheMANUALS.org

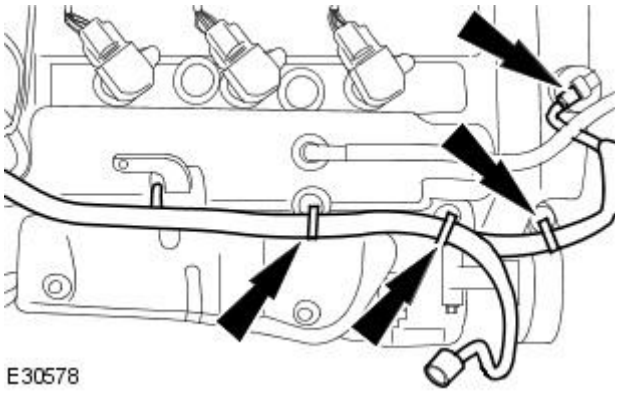


**20.** Attach the right-hand valve cover wiring harness.

**21.** NOTE: Un-cap the power steering pump exposed ports.

Install new power steering pump supply line O-ring seal.

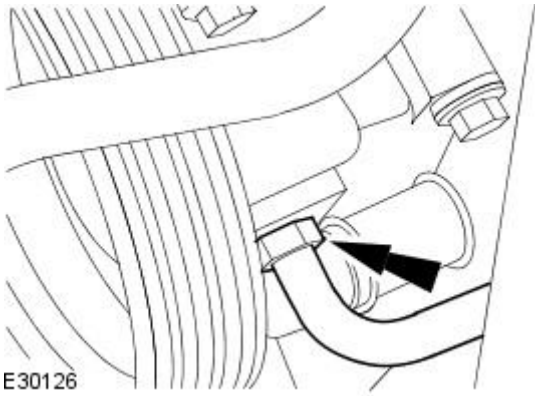


**22.** CAUTION: If power steering fluid comes into contact with the paintwork, the affected area must be immediately washed down with cold water.

Connect the power steering pump to steering gear suppy line.

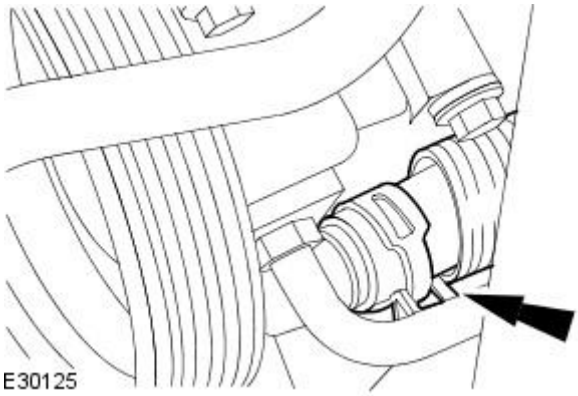


**23.** CAUTION: If power steering fluid comes into contact with the paintwork, the affected area must be immediately washed down with cold water.

Connect the power steering reservoir to power steering pump supply line.

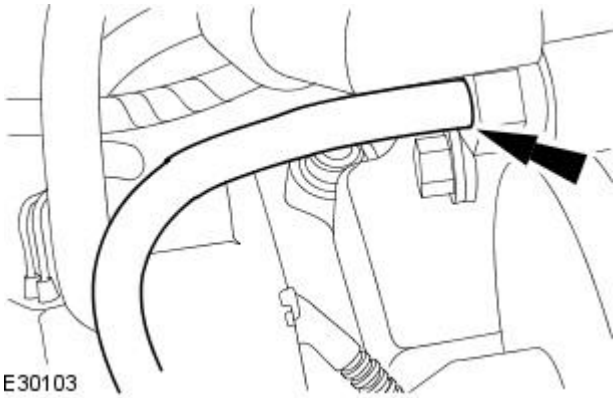


**24.** Attach the brake booster vacuum hose from the induction manifold.

GETtheMANUALS.org

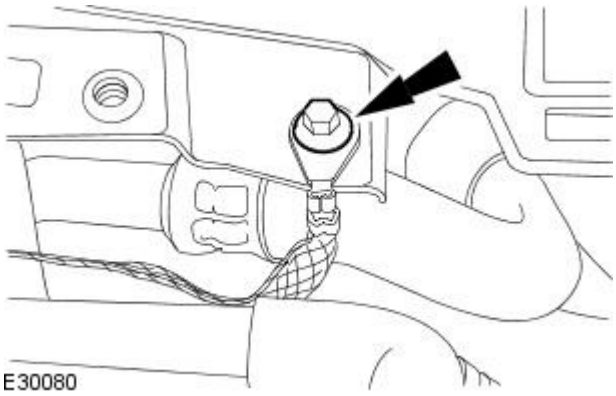


**25.** Attach the ground cable.

**26.** Install the cooling module. For additional information, refer to Section 303-03A Engine Cooling / 303-03B Supercharger Cooling / 303-03C Engine Cooling.

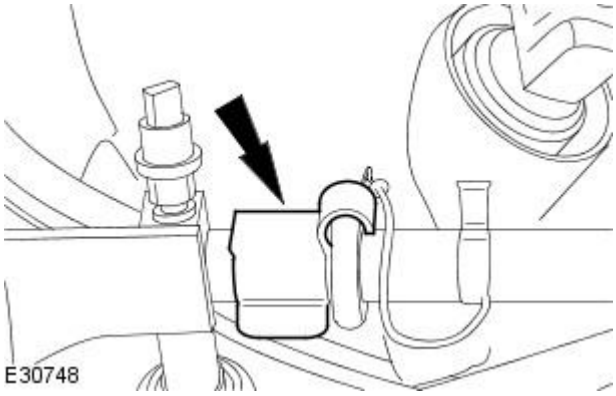


**27.** NOTE: Install new O-ring seals.

Connect the fuel supply manifold spring lock coupling.
For additional information, refer to Section 310-00 Fuel System - General Information.

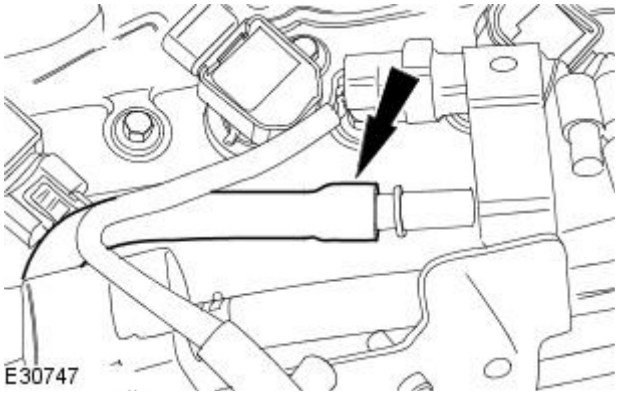


**28.** Connect the evaporative emission canister purge valve to intake manifold hose.

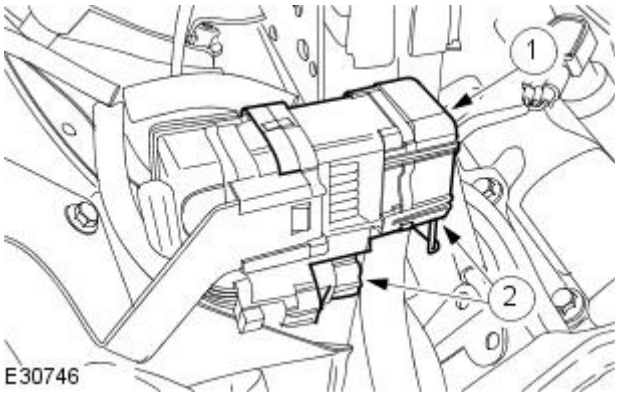


**29.** Connect the engine wiring harness electrical connectors.

1. Align the engine harness main electrical connector retaining bolt.
2. Connect the engine wiring harness electrical connectors.

GETtheMANUALS.org

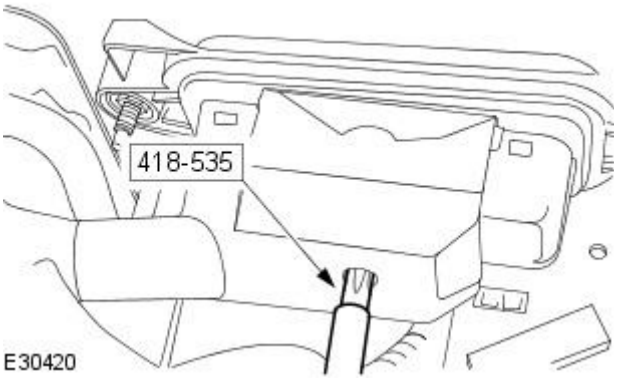


**30.** Connect the engine control module (ECM) electrical connector.

- Tighten to 6 Nm.

**31.** Raise the vehicle.

**32.** Connect the engine harness ground strap.

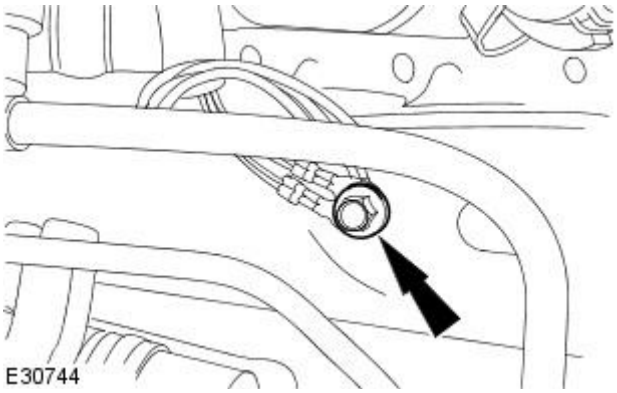


**33.** Install the fender splash shield.

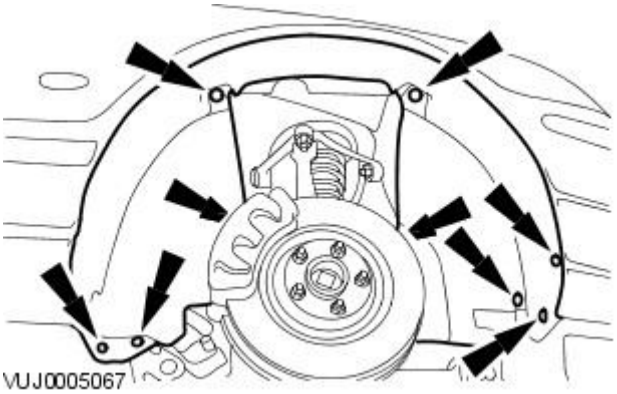


**34.** Install the passenger side front wheel and tire assembly.

- Tighten to 128 Nm.

**35.** Lower the vehicle.

GETtheMANUALS.org

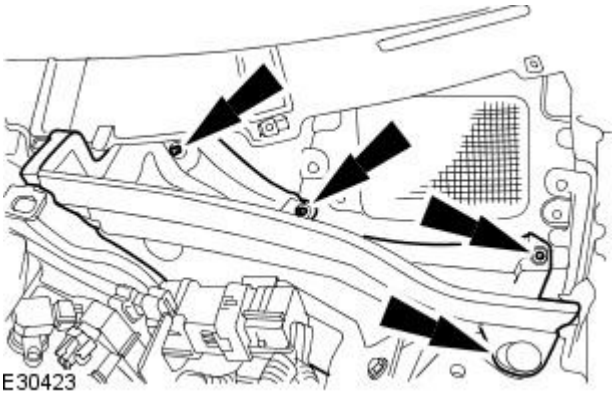


**36.** Install the engine compartment panel.

- Tighten the retaining nuts to 10 Nm.

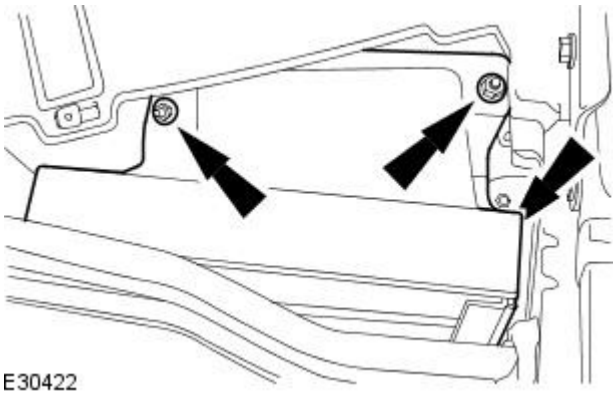


**37.** Install the cabin air filter housing.

- Tighten to 10 Nm.

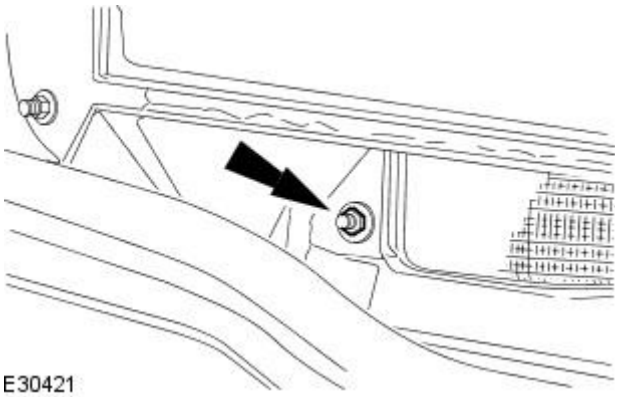


**38.** Install the cabin air filter housing retaining nut.

- Tighten to 10 Nm.

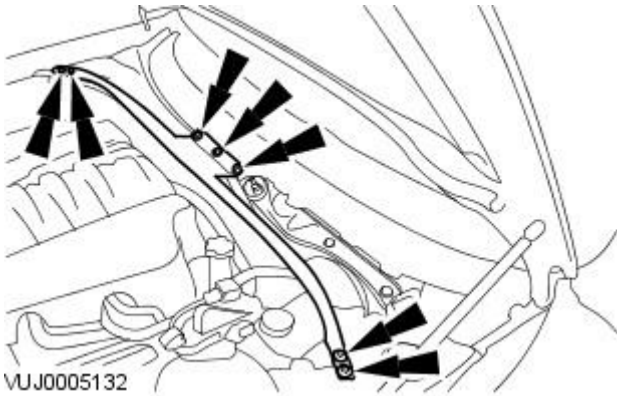


**39.** Install the engine compartment support.

- Tighten to 25 Nm.

**40.** Install the air cleaner assembly. For additional information, refer to Section 303-12A Intake Air Distribution and Filtering / 303-12B Intake Air Distribution and Filtering / 303-12C Intake Air Distribution and Filtering.

**41.** Install the cabin air filter.
For additional information, refer to Section 412-01 Air Distribution and Filtering.

**42.** Carry out the air conditioning evacuation and charging procedure.
For additional information, refer to Section 412-00 Climate Control System - General Information.

**43.** Raise the vehicle.

Vehicles With Manual Transmission

**44.** Install the manual transmission. For additional information, refer to Section 308-03A Manual Transmission/Transaxle / 308-03B Manual Transmission/Transaxle.

Vehicles with automatic transmission

**45.** Install the automatic transmission assembly.
For additional information, refer to Section 307-01 Automatic Transmission/Transaxle.

GETtheMANUALS.org

# Engine - V8 4.2L Petrol/V8 S/C 4.2L Petrol -

**Lubricants, Fluids, Sealers and Adhesives**

| Description | Specification |
|---|---|
| Engine oil 3.2L Gasoline, SAE 5W-30 (ROW) | API SJ / EC and ACEA A1 or A3 Jaguar WSS–M2C913–B preferred |
| Engine oil 4.0L Gasoline, SAE 5W-30 (NAS) | API SL and ILSAC GF–3 |
| Engine oil 4.0L Gasoline, SAE 5W-30 (ROW) | API SJ / EC and ACEA A1 or A3 Jaguar WSS–M2C913–B preferred |
| Engine oil 4.0L Gasoline SC, SAE 5W-30 (NAS) | API SL and ILSAC GF–3 |
| Engine oil 4.0L Gasoline SC, SAE 5W-30 (ROW) | API SJ / EC and ACEA A1 or A3 Jaguar WSS–M2C913–B preferred |
| Engine assembly lubricant | SQM-2C9003 AA EP90 |
| Sealant | WSS M4G 320-A3 |
| Hose assembly surfactant | ESE-M99 B144-B |

**Capacities**

| Description | Liters |
|---|---|
| Engine oil, initial fill | 6.8 |
| Engine oil, service fill with oil filter change | 6.5 |

**Cylinder Head**

| Item | Specification |
|---|---|
| Maximum permitted cylinder head warp (mm) | 0.125 |

**Torque Specifications**

| Description | Nm | lb-ft | lb-in |
|---|---|---|---|
| Accessory drive belt idler pulley retaining bolt | 25 | 18 | - |
| Accessory drivebelt tensioner retaining bolt | 40 | 30 | - |
| Air conditioning compressor retaining bolts | 25 | 18 | - |
| Air conditioning compressor mounting bracket retaining bolts | 25 | 18 | - |
| A/C manifold retaining bolt | 20 | 15 | - |
| Camshaft bearing caps retaining bolts | 10 | 7 | - |
| Camshaft position sensor retaining bolt | 7 | - | 62 |
| Connecting rod retaining bolts | A | - | - |
| Crankshaft pulley retaining bolt | 377 | 278 | - |
| Crankshaft position sensor retaining bolt | 10 | 7 | - |
| Cylinder head retaining bolts | A | - | - |
| Drive plate retaining bolts | A | - | - |
| Engine front cover retaining bolts | 13 | 10 | - |
| Engine mounting bracket retaining bolts | 40 (+/- 15%) | 30 (+/- 15%) | - |
| Engine mount retaining nuts to crossmember | 55 (+/- 15%) | 40 (+/- 15%) | - |
| Engine mount bracket to engine mount retaining nuts | 63 (+/- 15%) | 46 (+/- 15%) | - |
| Engine wiring harness retaining bracket | 10 | 7 | - |
| Exhaust manifold heat shield retaining bolts | 3 | - | 27 |
| Exhaust manifold heat shield retaining bolt to cylinder head | 50 | 37 | - |
| Exhaust manifold retaining bolts | 20 | 15 | - |
| Flexiplate retaining bolts | A | - | - |
| Front engine cover retaining bolts | 12 | 9 | - |
| Generator lower retaining bolt | 40 | 30 | - |
| Generator upper retaining bolt | 21 | 15 | - |
| Generator lower retaining bolt | 40 | 30 | - |
| Generator mounting bracket retaining bolts | 45 | 33 | - |
| Ignition coil retaining bolts | 5 | 4 | - |
| Intake manifold assembly retaining bolts | 22 | 16 | - |
| **Intake camshaft sprocket retaining bolt** | | | |
| Stage 1 | 20 | 15 | - |
| Stage 2 | Further 90 degrees | Further 90 degrees | - |
| Knock sensor retaining nuts | 20 | 15 | - |
| Lower cylinder block to the upper cylinder block retaining bolts | A | - | - |
| Oil cooler to oil filter housing retaining bolt | 20 | 15 | - |
| Oil filter housing retaining bolts | 21 | 15 | - |
| Oil level indicator tube retaining nut | 6 | - | 51 |
| Oil pan retaining bolts | 12 | 9 | - |
| Oil pump to engine block retaining bolts | 12 | 9 | - |
| Oil pan drain plug | 25 | 18 | - |
| Oil separator retaining bolts | 12 | 9 | - |
| Oil filter | 18 | 13 | - |
| Piston cooling jet retaining bolt | 9 | - | 80 |
| Power steering bracket bracket retaining bolts | 25 | 18 | - |
| Power steering pump retaining bolts | 25 | 18 | - |
| Primary timing chain tensioner retaining bolts | 12 | 9 | - |
| Primary timing chain tensioner guide retaining bolts | 12 | 9 | - |
| Secondary timing chain tensioner retaining bolts | 12 | 9 | - |
| Spark plugs | 27 | 20 | - |
| Starter motor retaining bolts | 45 | 33 | - |
| Thermostat housing retaining bolts | 10 | 7 | - |
| Water pump retaining bolts | 12 | 9 | - |
| Water pump pulley retaining bolts | A | - | - |
| Upper oil pan retaining bolts | 21 | 15 | - |
| Valve cover retaining bolts | 10 | 7 | - |
| Variable camshaft timing (VCT) oil control unit housing retaining bolts | 22 | 16 | - |
| **VCT sprocket centre retaining bolt** | | | |
| Stage 1 | 20 | 15 | - |
| Stage 2 | Further 90 degrees | Further 90 degrees | - |
| A = refer to the procedure for the correct torque sequence | - | - | - |

GETtheMANUALS.org

# Engine - V8 4.2L Petrol / V8 S/C 4.2L Petrol - Engine

Description and Operation

## Cylinder Block

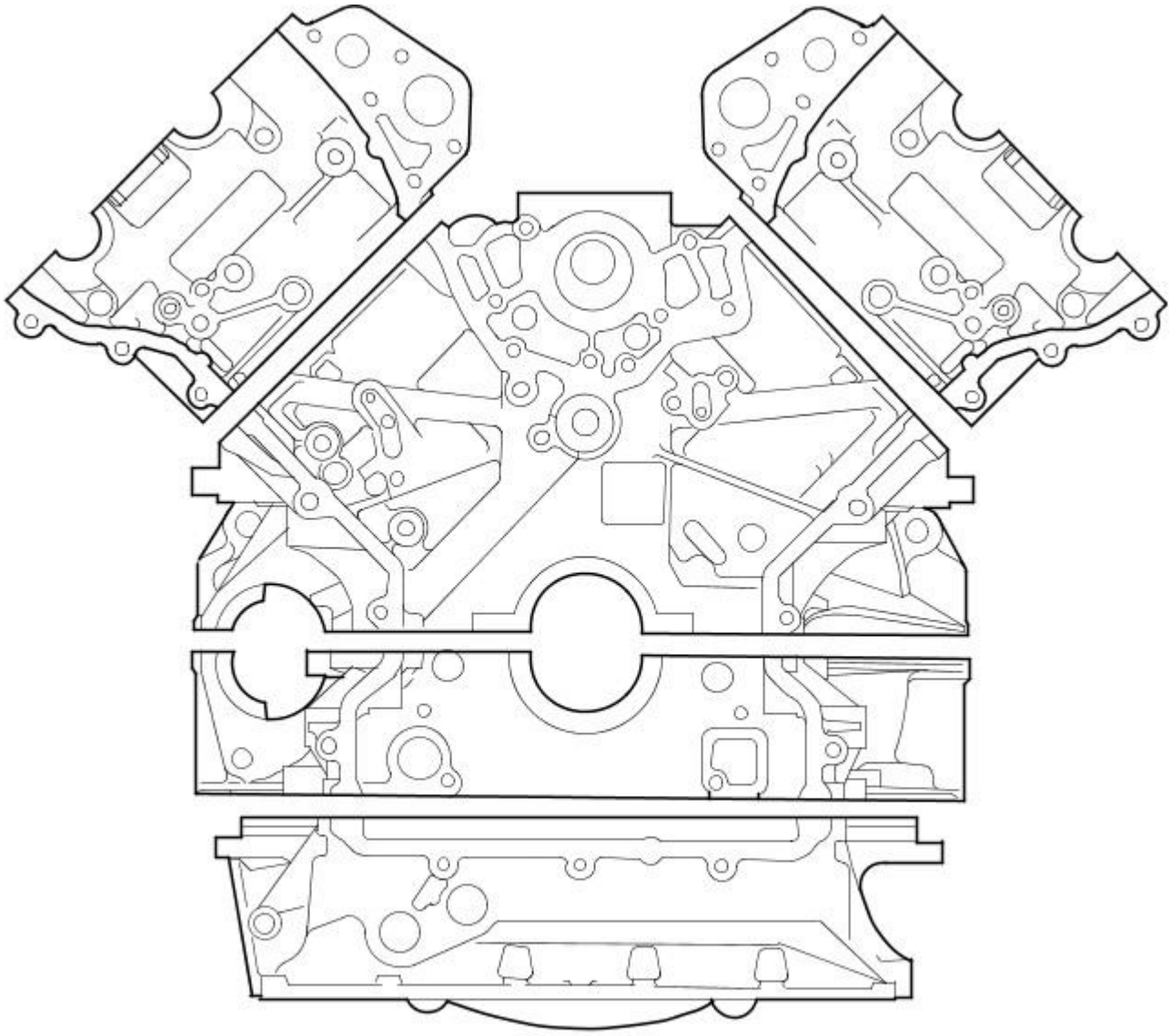

E31285

The 4.2L engine consists of an eight cylinder 90 degree 'Enclosed V' configuration liquid cooled aluminium cylinder block with dry cast liners

Viewed from the driving position, the right-hand cylinder bank is designated A-bank and the left-hand cylinder bank as B-bank.

## Cylinder Block Drain Plug

The coolant drain plug is located on the rear left side of the cylinder block.

On vehicles supplied with a cold climate package (i.e. vehicles operating in conditions regularly below -30ºC) a cylinder block heater unit is fitted instead of the drain plug.

## Knock Sensors

Two knock sensors are fitted to the cylinder block on the inboard side of each cylinder bank. The electrical connector of each sensor is secured to the left-hand engine cover bracket.

These piezo-electric sensors provide inputs to the ECM to indicate the detection and location of detonation during combustion.

## Crankshaft

GETtheMANUALS.org

E31286

The cast iron crankshaft has undercut and rolled fillets for improved strength and six counter-balance weights make sure low levels of vibration from the four throw, five bearing configuration.

The main bearing shells are aluminium/tin split plain type. An oil groove in the top half of each bearing transfers oil into the crankshaft oilway drillings for lubrication of the connecting rod bearings. A lead/bronze thrust washer is fitted on each side of the top half of the center main bearing.

The crankshaft rear oil seal is lipped and is a press fit in the interface of the bedplate to cylinder block.

A torsional vibration crankshaft damper pulley is bolted to the front of the crankshaft.

## Connecting Rods and Pistons

E31287

The connecting rods are manufactured from sinter-forged steel and have fracture-split bearing caps. The opposing sides of each connecting rod being fractured at the bearing horizontal center line.

The cylinder position is etched on adjoining sides of the joint to identify matching connecting rods and bearing caps. The connecting rod bearing shells are lead/bronze, split plain bearings.

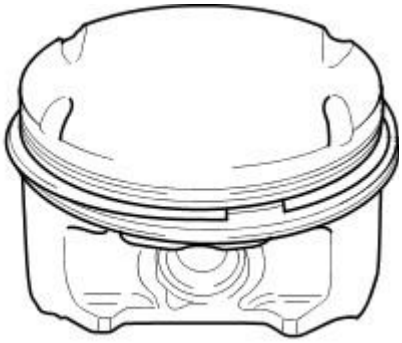

E31288

The pistons are open ended skirt design with small recesses for valve clearance and flat upper surfaces to reduce heat absorption. Three piston rings, two compression and one oil control, are fitted to each piston. Each piston is fitted on a gudgeon pin which is in a lead/bronze bush fitted in the connecting rod.

## Timing Gear

GETtheMANUALS.org

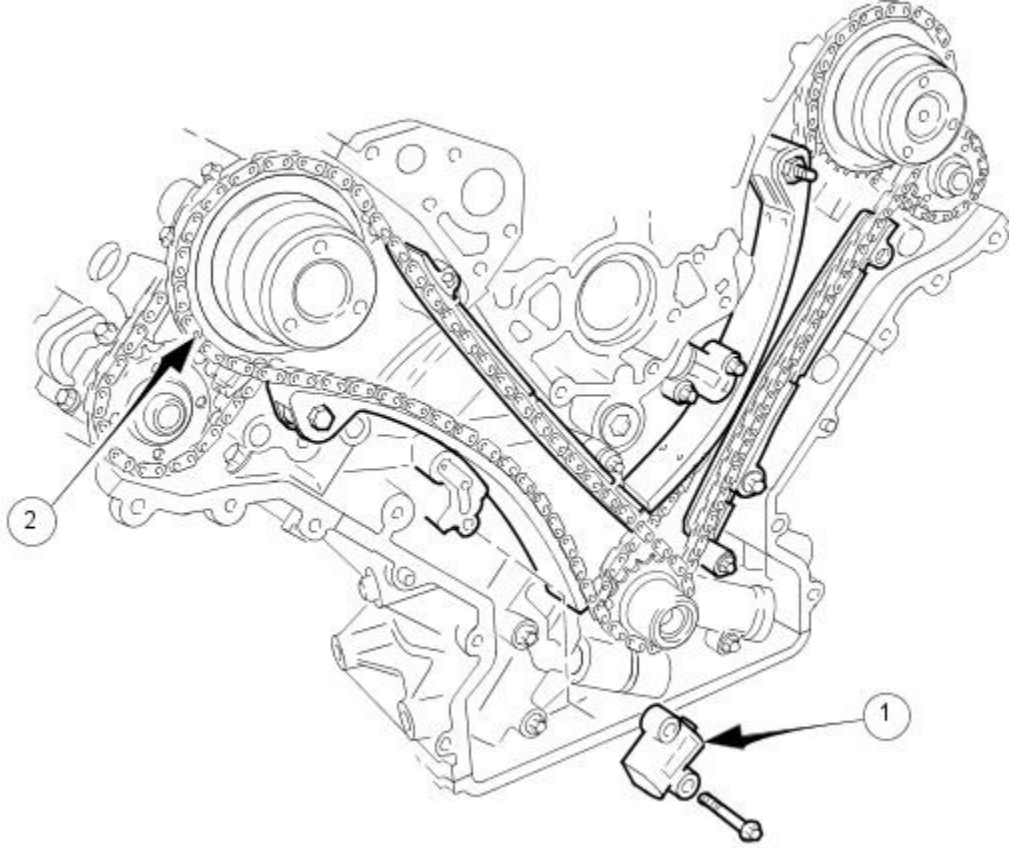


E31289

| Item | Part Number | Description |
|---|---|---|
| 1 | — | Primary chain tensioner |
| 2 | — | Primary chain |

Multi link primary and single link secondary chains drive the camshafts of each cylinder bank. The primary chains transmit the drive from sprocket on the crankshaft to a sprocket on each intake camshaft. The secondary chains transmit the drive from a second, smaller sprocket on the intake camshaft to a sprocket on the exhaust camshaft.

Each chain has a hydraulic tensioner operated by the engine lubricating system. A jet of oil from the end of each tensioner lubricates the chains. The primary chain tensioners act on pivoting flexible tensioner blades, the secondary chain tensioners act directly on the chains.

A woodruff key locates the drive sprocket on the crankshaft and these are retained in position by the crankshaft damper pulley.

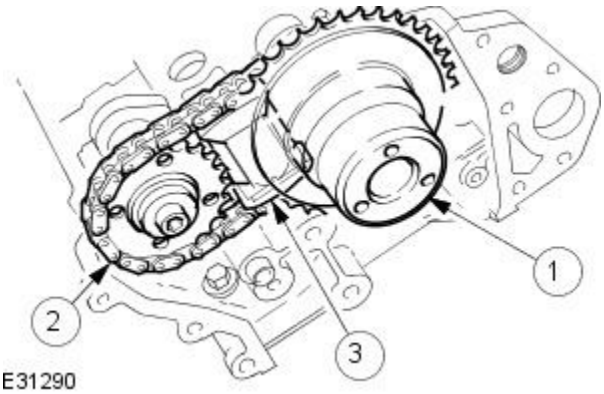


E31290

| Item | Part Number | Description |
|---|---|---|
| 1 | — | Variable valve timing unit |
| 2 | — | Secondary chain |
| 3 | — | Secondary chain tensioner |

The variable valve timing units and the exhaust camshaft sprockets are non-interference. They are clamped in place on the camshafts by the retaining bolt and clamping plate/washer.

## Timing Cover

GETtheMANUALS.org

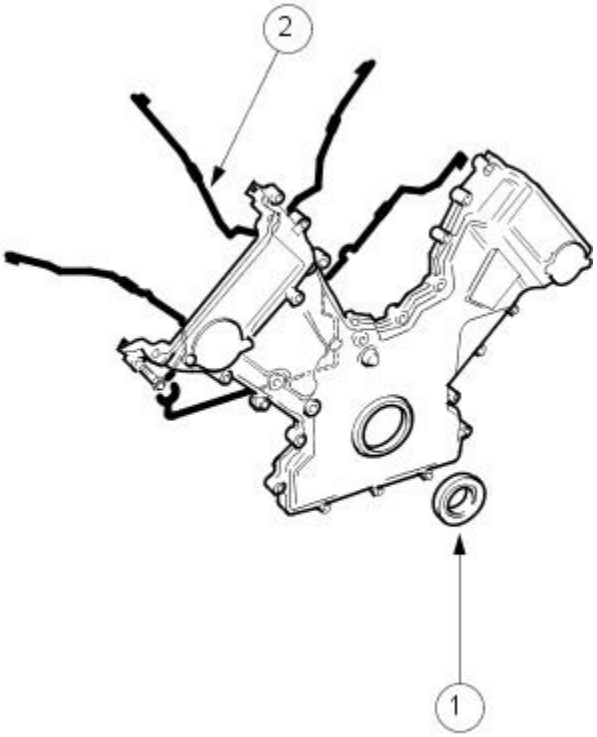


E31291

| Item | Part Number | Description |
|---|---|---|
| 1 | — | Crankshaft front oil seal |
| 2 | — | Poly-acrylic seal |

The aluminium-alloy timing cover accommodates the crankshaft front oil seal. Poly-acrylic seal in-groove gaskets seal the joint between the timing cover and the front face of the engine.

## Cylinder Heads and Valve Gear

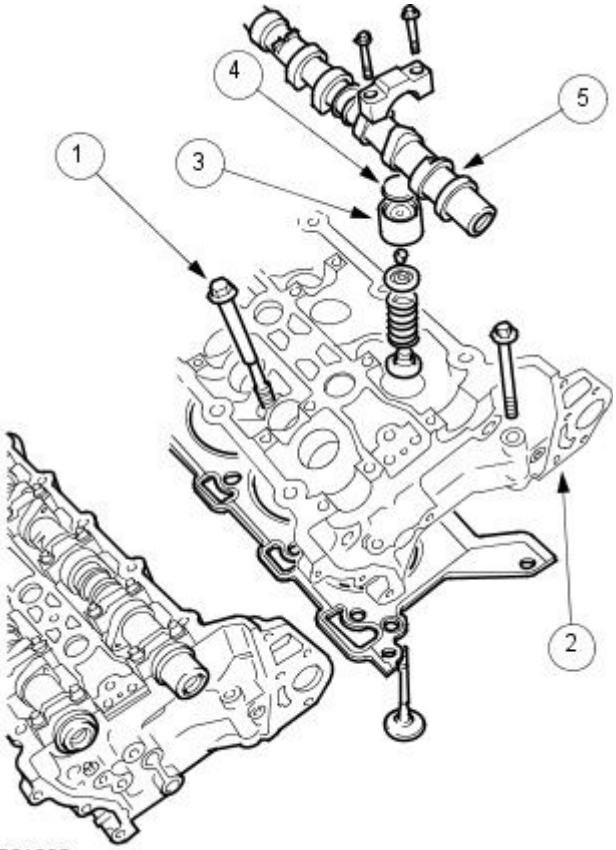


E31292

| Item | Part Number | Description |
|---|---|---|
| 1 | — | Cylinder head bolt |
| 2 | — | Coolant outlet |
| 3 | — | Valve lifter |
| 4 | — | Adjustment shim |
| 5 | — | Camshaft |

Cylinder heads are unique to each cylinder bank and are secured, using deep seated bolts, to the cylinder block. Two hollow dowels align each cylinder head with the cylinder block.

Each cylinder head gasket consists of a silicon beaded composite gasket with metal eyelets for the cylinder bores.

GETtheMANUALS.org

Each cylinder head incorporates dual overhead camshafts operating four valves per cylinder via solid aluminium-alloy valve lifters. A steel

shim in the top of each lifter allows adjustment of valve clearances .

Collets, valve collars and spring seats locate the valve springs on the intake and exhaust valves. Valve stem seals are integrated into the spring seats.

Four 14mm spark plugs are located in a recess on the center-line of each cylinder head. For additional information, refer to For additional information, refer to Section 303-07A Engine Ignition / 303-07B Engine Ignition / 303-07C Glow Plug System.

## Camshafts

The chilled cast iron camshafts are each retained by five aluminium alloy caps - location numbers 0 to 4 for the intake camshaft and 5 to 9 for the exhaust camshaft from the front.

A machined flat near the front of each camshaft enables the camshafts to be locked during the valve timing procedure.

## Camshaft Sensor

The camshaft sensors are fitted to the rear of each cylinder head and are triggered by four toothed sensing rings fitted to the rear of the intake camshaft. The camshaft sensors are variable reluctance sensors that provides an input to the ECM of intake camshaft position.

## Camshaft Covers

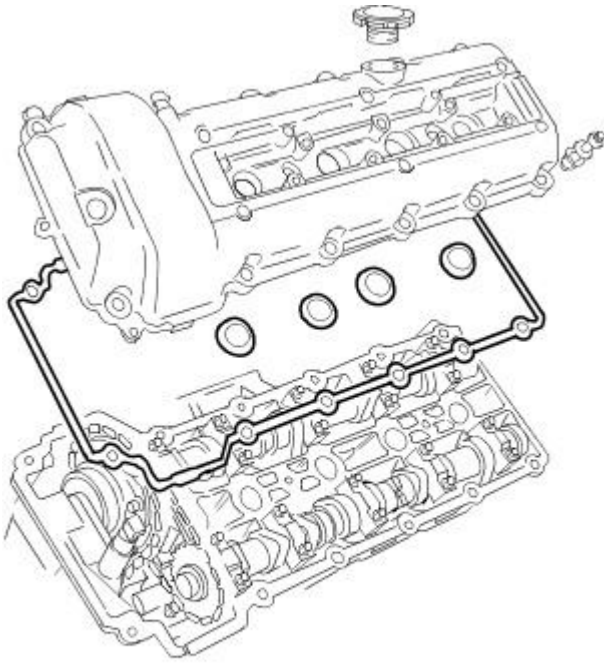

VUJ0001974

The valve covers are made from thermoplastic plastic; the right-hand bank cover incorporates an outlet for the part load engine breather.

The left-hand bank cover incorporates the engine oil filler cap and an outlet for the full load engine breather. Identical oil separators are incorporated inside the top of each cover. Each oil separator comprises a wire gauze packing in an open ended enclosure below the breather outlet.

## Bedplate

GETtheMANUALS.org

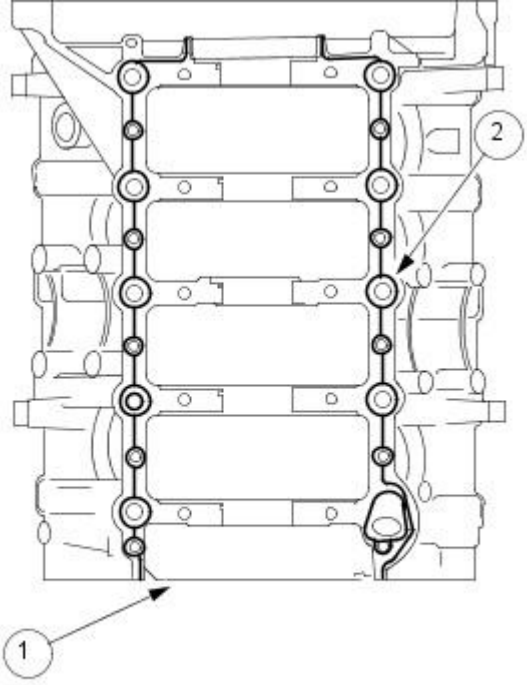


E31293

| Item | Part Number | Description |
|---|---|---|
| 1 | — | Bedplate |
| 2 | — | Sealant track |

This is a structural casting bolted to the bottom of the cylinder block to retain the crankshaft and to further improve overall rigidity.

Main bearing clearance changes due to expansion are minimized by means of iron inserts cast into the bedplate main bearing supports.

Two hollow dowels align the bedplate with the cylinder block and the joint is sealed by a continuous bead of sealant.

## Engine Mountings

The engine is mounted at two points. At the front, on each side of the engine, there is a mounting bracket with a Hydramount mounted to the subframe.

## Engine Lubrication

Oil is drawn from the reservoir in the oil pan and pressurized by the oil pump. The output from the oil pump is then filtered and distributed through the internal oil passages.

Where an oil cooler is fitted, the oil is cooled before entering the filter.

All moving parts are lubricated either by pressure or splash oil. Pressurized oil is also provided for operation of the variable valve timing units and the timing gear chain tensioners.

All of the oil system components are installed on the structural sump.

Oil is returned to the oil pan under gravity through large drain holes in the cylinder heads and the engine block to make sure quick return of the oil.

## Oil Pick-Up

The plastic moulded oil pick-up is attached to the underside of the structural sump. It is immersed in the oil reservoir to provides a supply to the oil pump during all normal vehicle attitudes. A castellated inlet allows the supply to be maintained after any deformation of the sump pan (e.g. after grounding). A mesh screen in the inlet prevents debris from entering the oil system.

## Oil Pressure Switch

Installed at the right front of the structural sump, the oil pressure switch connects a ground input to the instrument cluster when oil pressure is present. This switch operates at a pressure of 0,15 to 0,41 bar (2.2 to 5.9 lbf.in2).

## Oil Pump

The oil pump is fitted at the front of the engine and is driven directly by the crankshaft. The inlet and outlet ports align with oil passages in the bedplate, with a rubber coated metal gasket to seal the pump to bedplate interface.

An integral pressure relief valve regulates pump outlet pressure at 4,5 bar (65.25lbf.in2).

## Oil Pan

The oil pan/sump comprises an aluminium-alloy structural sump bolted to the bedplate and a pressed steel pan with integral sump plug, bolted to the structural sump.

## Oil Filler Cap

The oil filler cap is located on the top of the left-hand bank valve cover.

GETtheMANUALS.org

## Windage Tray

A windage tray attached to the top of the structural sump isolates the oil pan from the disturbed air flow, caused by the rotation of the crankshaft; preventing oil aeration and improving oil drainage.

## Crankcase Ventilation

The engine is ventilated through a part-load and a full-load breather; one on each valve cover. These flexible plastic hoses incorporate O-ring seals and quick release connectors.

The part-load breather ventilates the left-hand valve cover (left-hand bank) and feeds onto the throttle body adaptor and the purge valve. This breather is connected between the oil separator in the cover and the induction elbow.

The full-load breather ventilates the right-hand cover (right-hand bank) and is connected between the oil separator in the cover and the air intake duct between the mass air flow (MAF ) sensor and the throttle body.

The MAF sensor unit combines the two sensors: one for air flow and one for air inlet temperature. It is a hot wire sensor that provides an input which is (approximately) proportional to the mass air flow into the engine.

Each valve cover oil separator consists of wire gauze packed into an open ended enclosure in the top of the cover, below the breather outlet.

## Ignition System

The 14mm spark plugs, one per cylinder, locate in recesses along the center-line of each cylinder head. The on-plug ignition coils are secured to the valve covers.

## Variable Valve Timing (VVT)

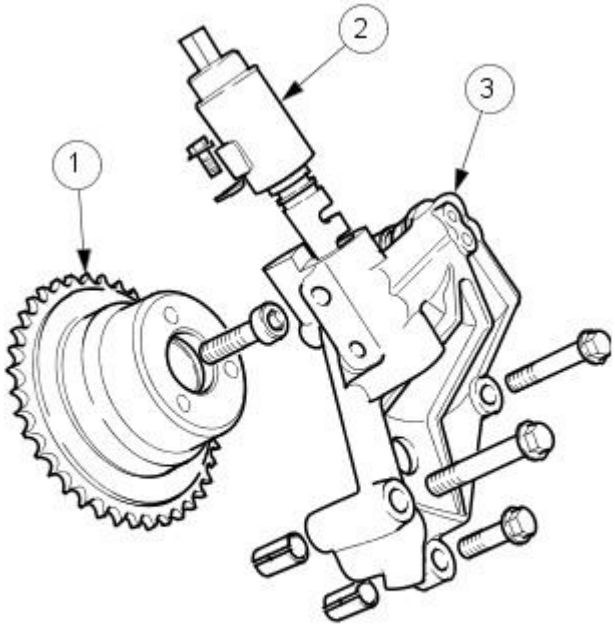


E31298

| Item | Part Number | Description |
|---|---|---|
| 1 | — | Variable valve timing (VCT) oil control unit |
| 2 | — | Variable valve timing (VCT) oil control solenoid |
| 3 | — | Bush carrier |

The variable valve timing system improves both low speed and high speed engine performance, engine idle quality and exhaust emissions. It is an infinitely variable system operating on the intake camshafts only. There is the equivalent of 48º of crankshaft movement between the retarded and advanced positions. Engine oil pressure operates the system under the control of the ECM.

GETtheMANUALS.org

Published: 11-May-2011

# Engine - V8 4.2L Petrol / V8 S/C 4.2L Petrol - Engine

Diagnosis and Testing

For additional information, refer to Section 303-00 Engine System - General Information

GETtheMANUALS.org

# Engine - V8 4.2L Petrol / V8 S/C 4.2L Petrol - Valve Clearance Adjustment

General Procedures

| Special Tool(s) | |
|---|---|
| DWST024 | Tappet hold down tool<br><br>303-540 |
| 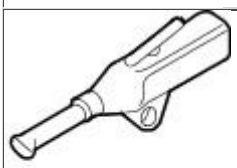 DWST074 | Fan nozzle, air gun<br><br>303-590 |

1. Remove the left-hand valve cover. For additional information, refer to: (303-01B)

   Valve Cover LH - VIN Range: G00442->G45170 (In-vehicle Repair),
   Valve Cover LH - VIN Range: G45171->G99999 (In-vehicle Repair).

2. Remove the right-hand valve cover. For additional information, refer to: (303-01B)

   Valve Cover RH - VIN Range: G00442->G45170 (In-vehicle Repair),
   Valve Cover RH - VIN Range: G45171->G99999 (In-vehicle Repair).

3. Use a cloth to wipe away as much oil as possible from the tappet and shim.

4. CAUTIONS:

   Rotating the crankshaft in a counterclockwise direction may cause engine damage. Crankshaft journals are directionally machined. Rotating the crankshaft counterclockwise can raise burrs on bearing surfaces, reducing engine life.

   Camshaft lobes must be 180 degrees away from each valve tappet or the valve clearance will be incorrect.

   Rotate the engine clockwise to position the camshaft lobe away from the shim surface.

5. Install the base plate of the valve clearance adjusting tool to the relevant cylinder head using the bolts supplied.

   - Secure the tool to the valve cover retaining holes.

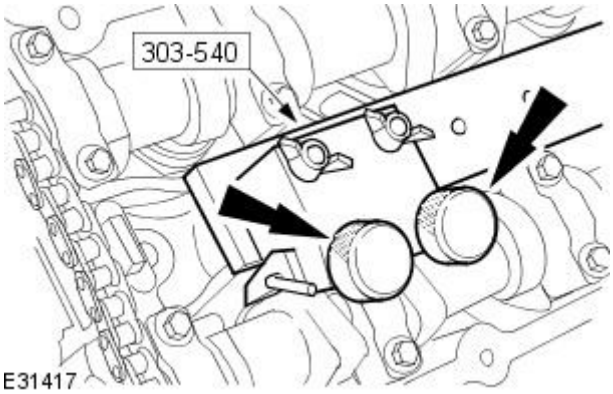

E31417

6. CAUTION: Do not rotate the crankshaft while the attachment is installed to the base plate.

   Install the attachment of the tool to the base plate to remove the relevant shims.

   1. Adjust the fingers of the attachment to the highest position.
   2. Install the attachment to the base plate.
   3. Tighten the retaining screws to secure the attachment to the base plate.

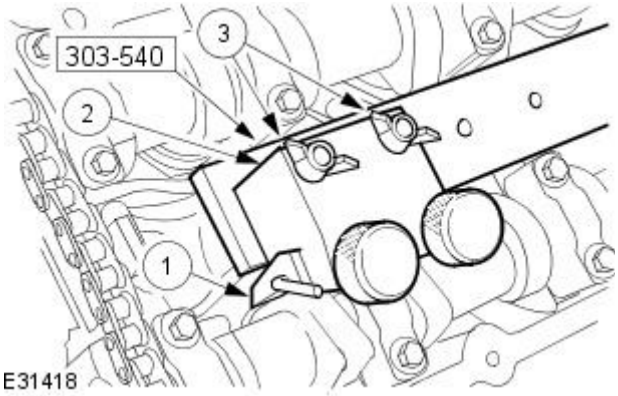

E31418

GETtheMANUALS.org

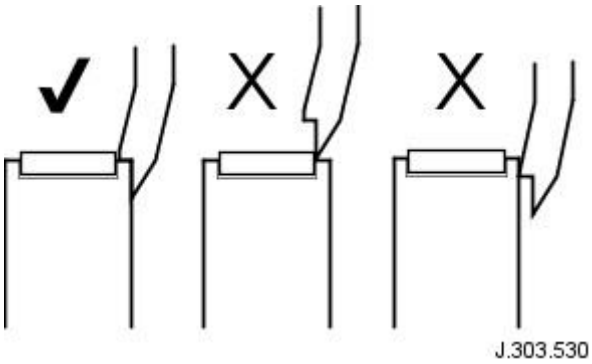


**7.** NOTE: Use a mirror to help locating the fingers of the special tool as access is restricted.

Position the fingers on the outer edges of the tappet. Make sure the recessed step on each finger locates on the edge of the tappet.

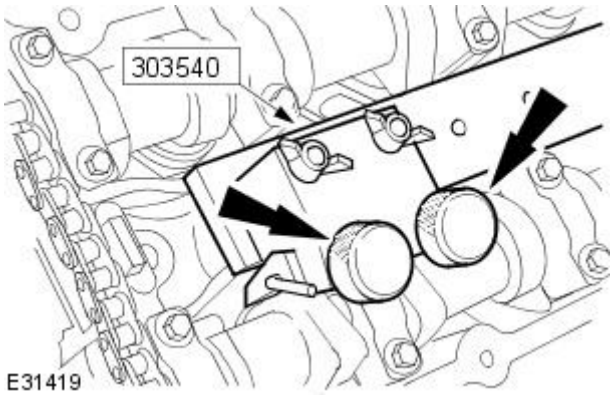


**8.** Tighten the special tool to compress the valve springs.

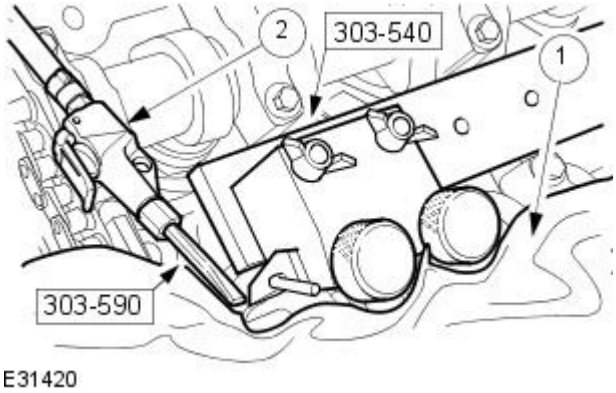


**9.** WARNING: The following operations require the use of compressed air. Always wear suitable eye protection.

CAUTION: Do not use a magnet to remove shims. Failure to follow these instructions may result in damage to the vehicle.

Remove, clean and measure the shim.

1. Surround the immediate working area with a cloth to retain any loose shims displaced by the compressed air.
2. Use special tool aimed at the edge of the shim to lift it from the tappet. Remove the shim from each tappet, noting the position of each one.

**10.** NOTE: Two shims within each procedure are possible to be replaced using the special tool.

Use the following formula to calculate the required shim thickness.

- Original shim thickness + measured shim clearance - desired clearance = required shim thickness.

**11.** CAUTION: Do not use a magnet to install shims. Failure to follow these instructions may result in damage to the vehicle.

• NOTE: Shims must be fitted with the size markings facing the tappet, not the camshaft.

Apply a light coat of engine oil to the replacement shim(s) and install.

**12.** Loosen the special tool to allow the valve springs to return to their normal position.

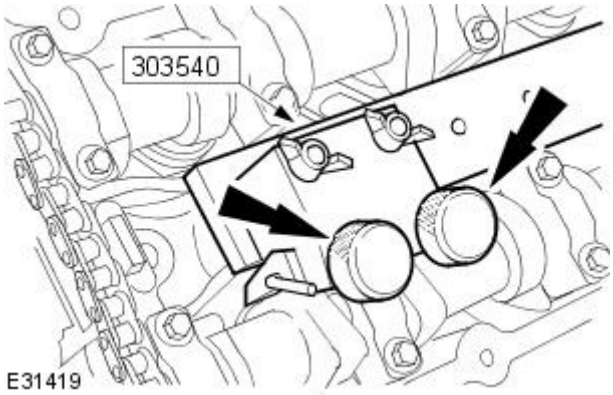


**13.** Using the feeler gauge set, measure the clearance between the camshaft and the shim surface. Record and check the readings.
For additional information, refer to: Valve Clearance Check (303-01B

GETtheMANUALS.com

Engine - V8 4.2L Petrol/V8 S/C 4.2L Petrol, General Procedures).

**14.** When the valve clearance is correct, remove the attachment from the base plate and repeat the procedure for the following two valves to be adjusted.

**15.** Install the right-hand valve cover. For additional information, refer to: (303-01B)

Valve Cover RH - VIN Range: G00442->G45170 (In-vehicle Repair),
Valve Cover RH - VIN Range: G45171->G99999 (In-vehicle Repair).

**16.** Install the left-hand valve cover. For additional information, refer to: (303-01B)

Valve Cover LH - VIN Range: G00442->G45170 (In-vehicle Repair),
Valve Cover LH - VIN Range: G45171->G99999 (In-vehicle Repair).

GETtheMANUALS.org

# Engine - V8 4.2L Petrol/V8 S/C 4.2L Petrol - Valve Clearance Check

General Procedures

1. Remove the left-hand valve cover. For additional information, refer to: (303-01B)

   Valve Cover LH - VIN Range: G00442->G45170 (In-vehicle Repair),
   Valve Cover LH - VIN Range: G45171->G99999 (In-vehicle Repair).

2. Remove the right-hand valve cover. For additional information, refer to: (303-01B)

   Valve Cover RH - VIN Range: G00442->G45170 (In-vehicle Repair),
   Valve Cover RH - VIN Range: G45171->G99999 (In-vehicle Repair).

3. CAUTIONS:

   Rotating the crankshaft in a counterclockwise direction may cause engine damage. Crankshaft journals are directionally machined. Rotating the crankshaft counterclockwise can raise burrs on bearing surfaces, reducing engine life.

   Camshaft lobes must be 180 degrees away from each valve tappet or the valve clearance will be incorrect.

   Rotate the engine clockwise to position the camshaft lobe away from the shim surface.

4. Using the feeler gauge set, measure the clearance between the camshaft and the shim surface. Record and check the readings. For additional information, refer to: Valve Clearance Check (303-01B Engine - V8 4.2L Petrol/V8 S/C 4.2L Petrol, General Procedures). Adjust the clearances as necessary.

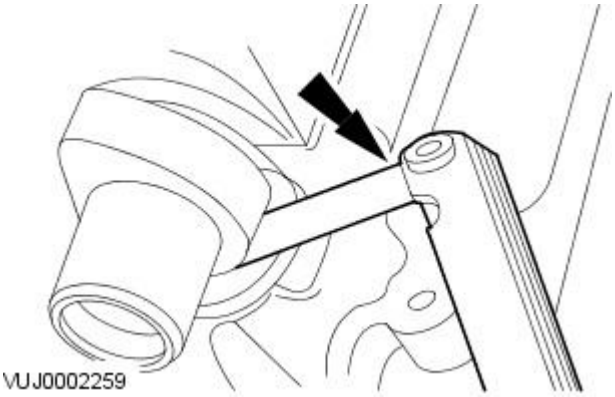


5. Install the right-hand valve cover. For additional information, refer to: (303-01B)

   Valve Cover RH - VIN Range: G00442->G45170 (In-vehicle Repair),
   Valve Cover RH - VIN Range: G45171->G99999 (In-vehicle Repair).

6. Install the left-hand valve cover. For additional information, refer to: (303-01B)

   Valve Cover LH - VIN Range: G00442->G45170 (In-vehicle Repair),
   Valve Cover LH - VIN Range: G45171->G99999 (In-vehicle Repair).

GETtheMANUALS.org

# Engine - V8 4.2L Petrol/V8 S/C 4.2L Petrol - Camshafts RHVIN Range: M45255->N52047

In-vehicle Repair

| Special Tool(s) | |
|---|---|
| 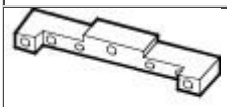 303-530 | Camshaft setting<br><br>303-530 |
| DWST021 | Timing chain tensioning tool<br><br>303-532 |
| DWST032 | Crankshaft setting, main tool<br><br>303-645 |

## Removal

All vehicles

1. Remove the air deflector.
   For additional information, refer to: Air Deflector (501-02 Front End Body Panels, Removal and Installation).
2. Disonnect the crankshaft position (CKP) sensor electrical connector.

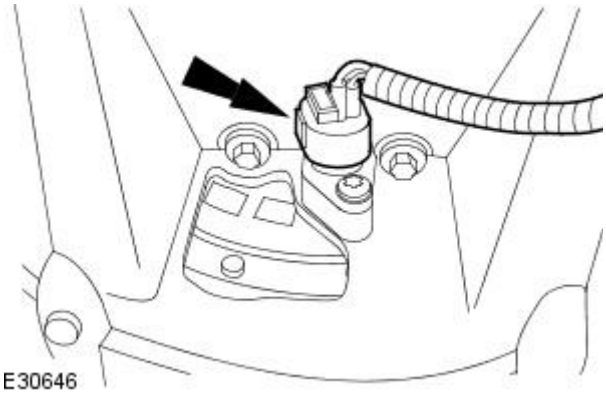

E30646

3. Remove the CKP sensor.

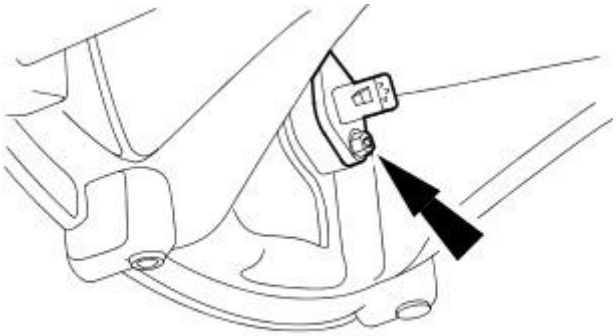

E30694

GETtheMANUALS.org

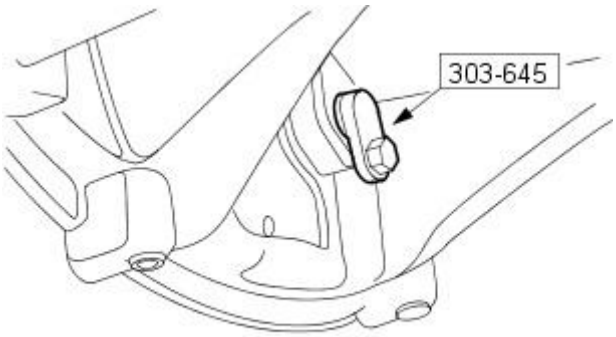


VUJ0002400

**4.** Install the special tool.

**5.** Remove the engine front cover.
For additional information, refer to: Engine Front Cover - VIN Range: M45255->N52047 (303-01B Engine - V8 4.2L Petrol/V8 S/C 4.2L Petrol, In-vehicle Repair).

Vehicles without supercharger

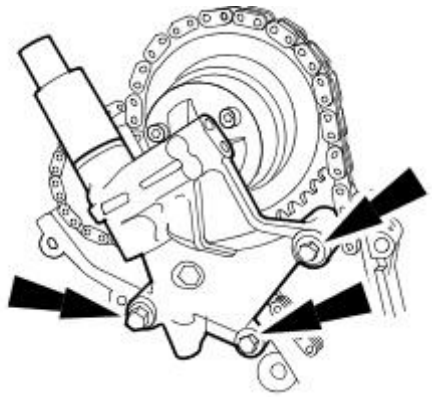

E30699

**6.** Remove the right-hand variable camshaft timing oil control unit housing.

- Remove and discard the O-ring seals.

All vehicles

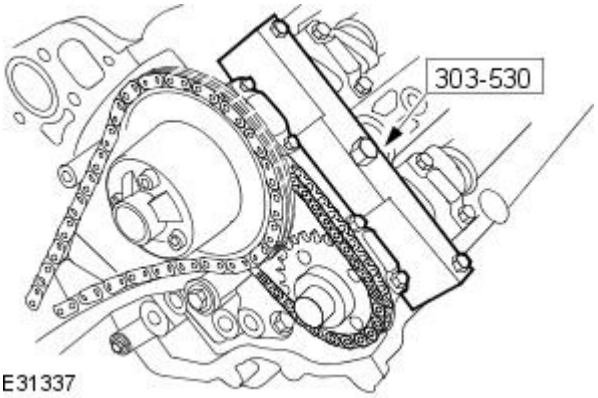


E31337

**7.** Install the special tool to the left-hand cylinder head.

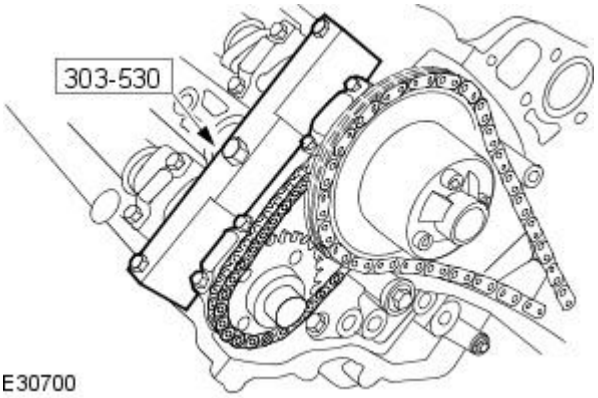


E30700

**8.** Install the special tool to the right-hand cylinder head.

GETtheMANUALS.org

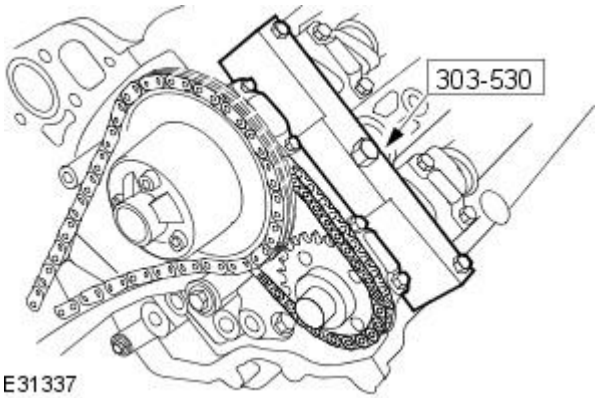

E31337

**9.** Install the special tool to the left-hand cylinder head.

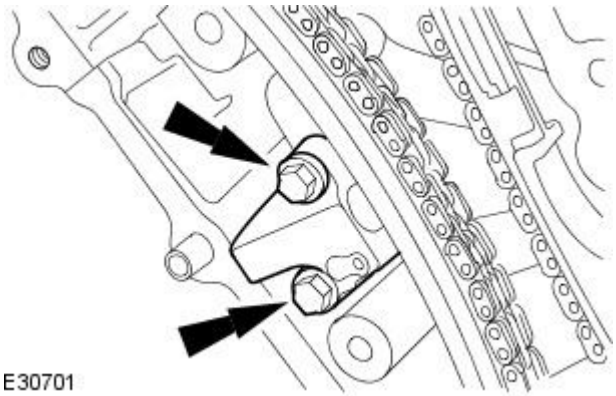
E30701

**10.** Remove the primary timing chain tensioner assembly.

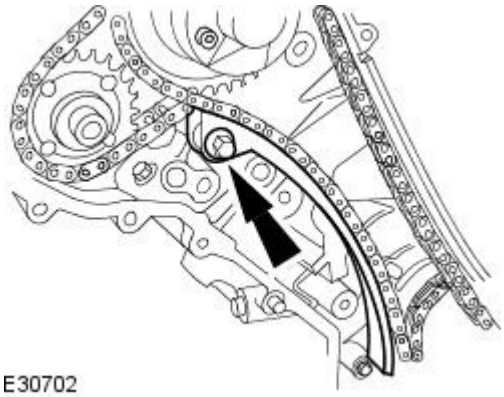
E30702

**11.** Remove the primary timing chain tensioner guide.

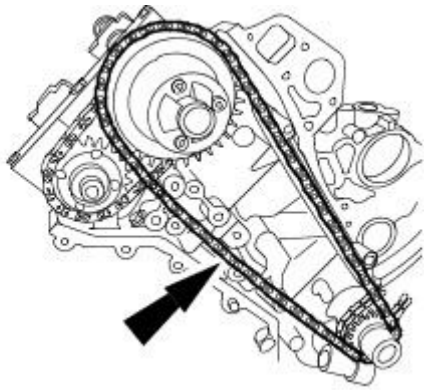
E30703

**12.** Remove the primary timing chain.

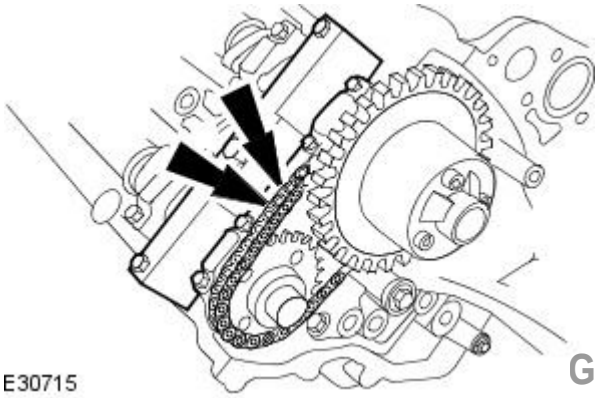
E30715

**13.** Remove the secondary timing chain tensioner retaining bolts.

GETtheMANUALS.org

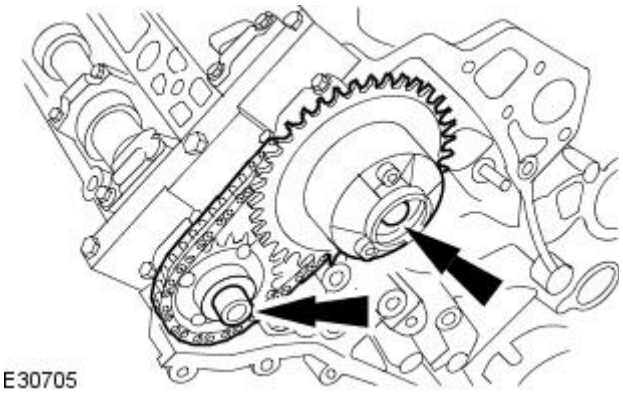


**14.** Remove the camshaft sprockets.

- Remove the secondary timing chain tensioner and secondary timing chain from the camshaft sprockets.

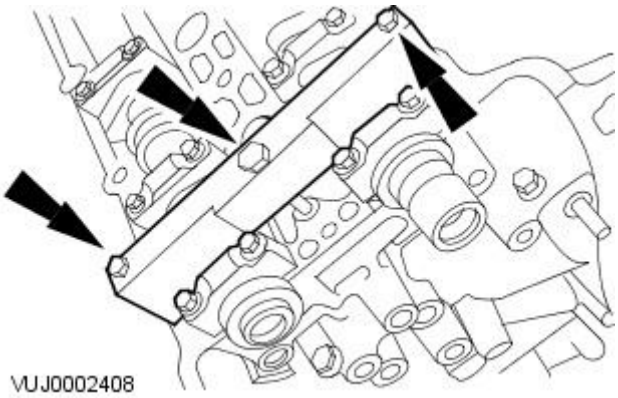


**15.** Remove the camshaft setting tool.

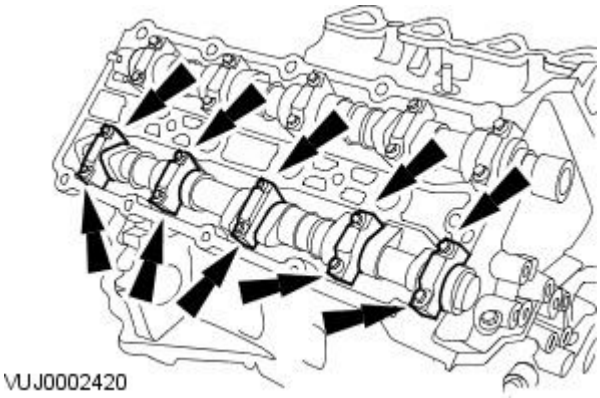


**16.** Remove the camshaft bearing caps.

- Remove the camshaft bearing cap retaining bolts evenly and in stages.
- Remove the camshaft bearing caps. Note their orientation and markings, each is marked with its position (a number) and orientation (an arrow).

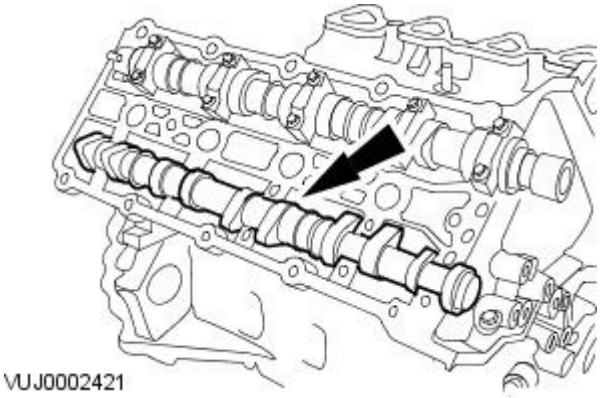


**17.** Remove the right-hand exhaust camshaft.

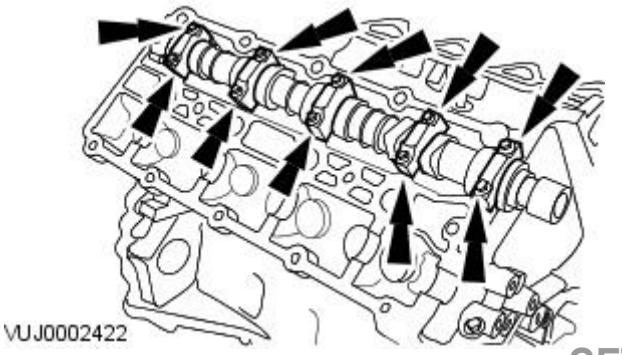


**18.** Remove the camshaft bearing caps.

- Remove the camshaft bearing cap retaining bolts evenly and in stages.
- Remove the camshaft bearing caps. Note their orientation and markings, each is marked with its position (a number) and orientation (an arrow).

GETtheMANUALS.org

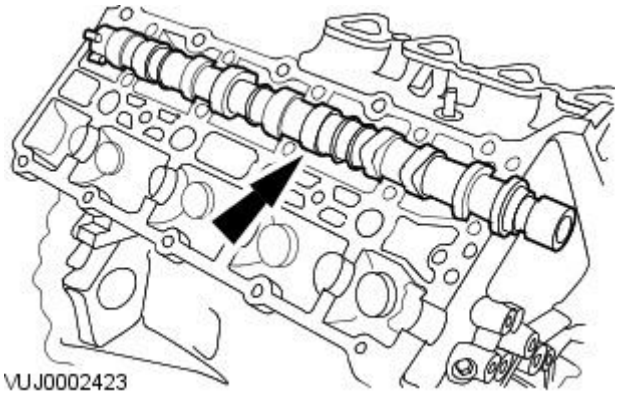


**19.** Remove the right-hand intake camshaft.

## Installation

All vehicles

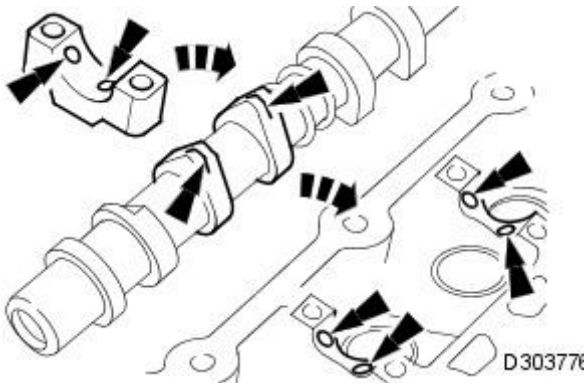


**1.** NOTE: Make sure all components are clean.

Apply oil (EP-90) to the camshaft and bearing surfaces, as follows:

- To the upper face of each bearing surface in the cylinder head.
- To the upper face of each bearing surface in each bearing cap.
- On the cam lobes ONLY, not on the base circle area.

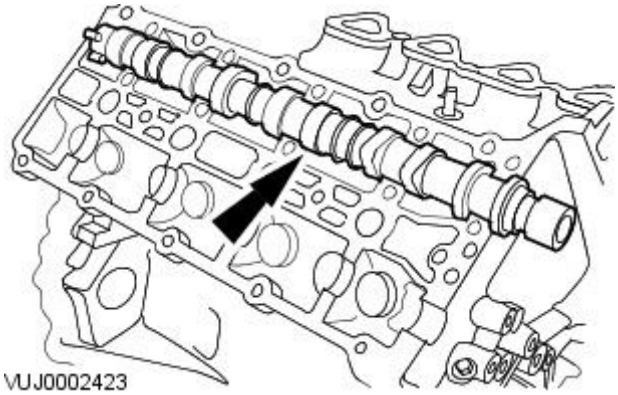


**2.** Install the right-hand inlet camshaft.

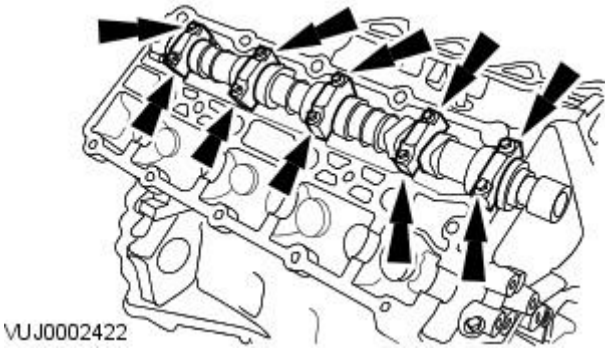


**3.** CAUTION: Alternate bolt tightening to correctly seat the camshaft bearing caps.

Install the camshaft bearing cap bolts evenly.

- Tighten to 10 Nm.

GETtheMANUALS.org

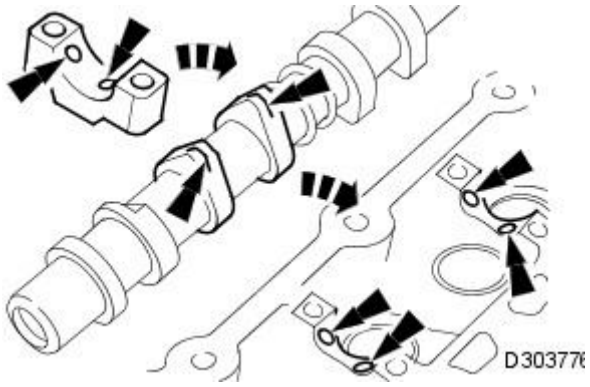


**4.** NOTE: Make sure all components are clean.

Apply oil (EP-90) to the camshaft and bearing surfaces, as follows:

- To the upper face of each bearing surface in the cylinder head.
- To the upper face of each bearing surface in each bearing cap.
- On the cam lobes ONLY, not on the base circle area.

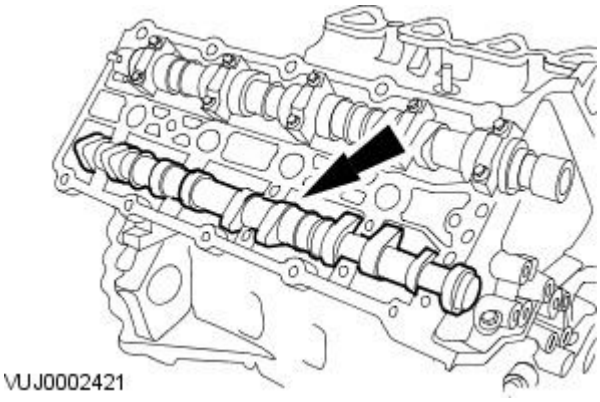


**5.** Install the right-hand exhaust camshaft.

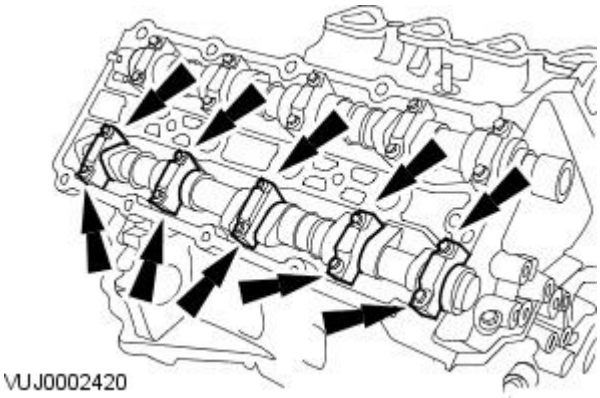


**6.** CAUTION: Alternate bolt tightening to correctly seat the camshaft bearing caps.

Install the camshaft bearing cap bolts evenly.

- Tighten to 10 Nm.

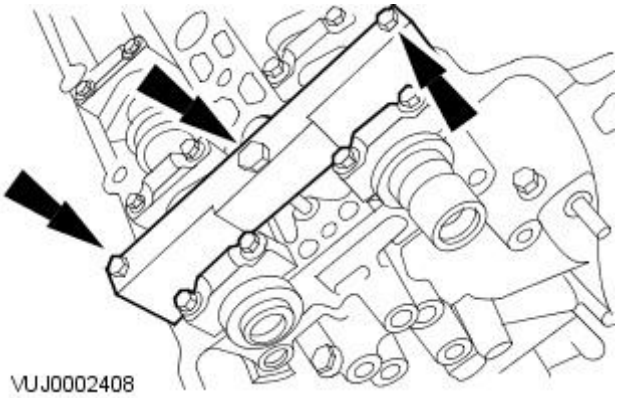


**7.** Install the camshaft setting tool.

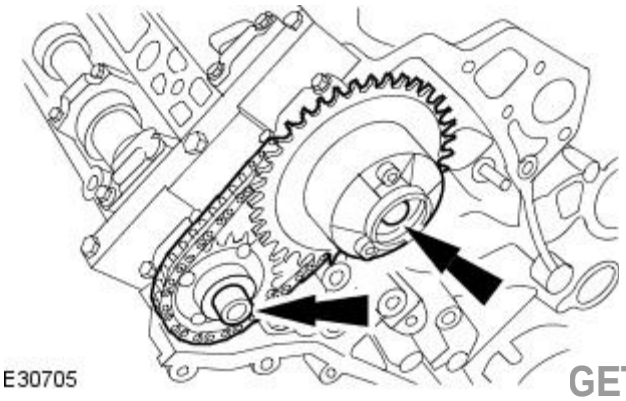


**8.** CAUTIONS:

Do not tighten the camshaft sprocket retaining bolts.

Make sure the secondary timing chain and camshaft sprockets are free to rotate.

Install the camshaft sprockets.

- Install the secondary timing chain tensioner and secondary timing chain to the camshaft sprockets.

GETtheMANUALS.org

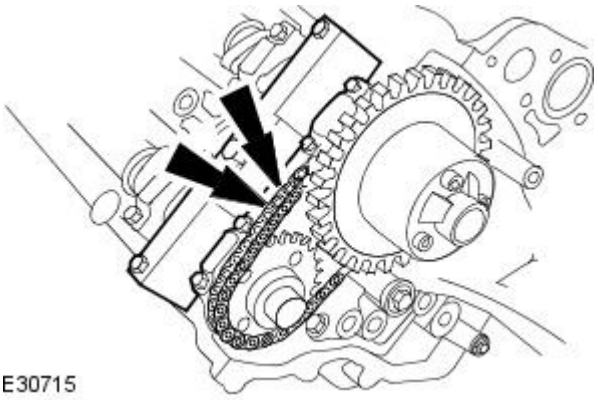
E30715

**9.** Install the secondary timing chain tensioner retaining bolts.

- Tighten to 12 Nm.

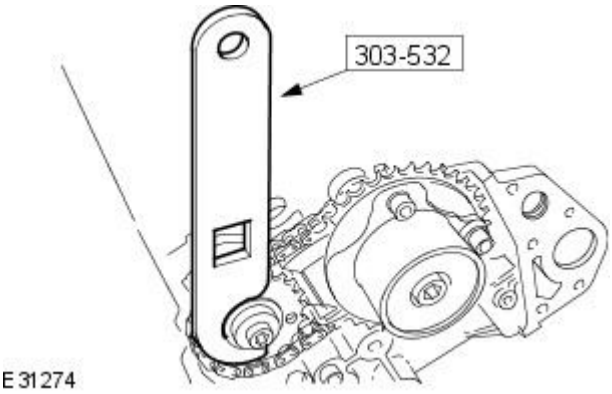

E31274

**10.** Install the special tool to the exhaust camshaft sprocket.

- Reposition the camshaft sprockets for the most advantageous position for use of the tool.

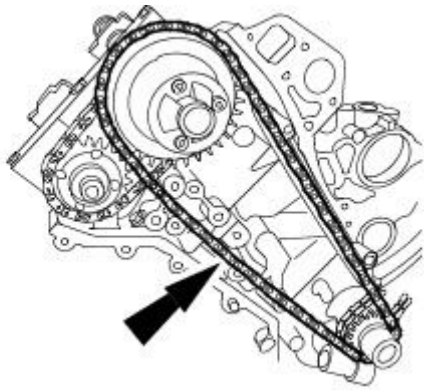
E30703

**11.** CAUTION: Make sure the timing chain slack is on the tensioned side of the timing chain.

Install the primary timing chain.

- Install the primary chain over the crankshaft sprocket and the intake sprocket.

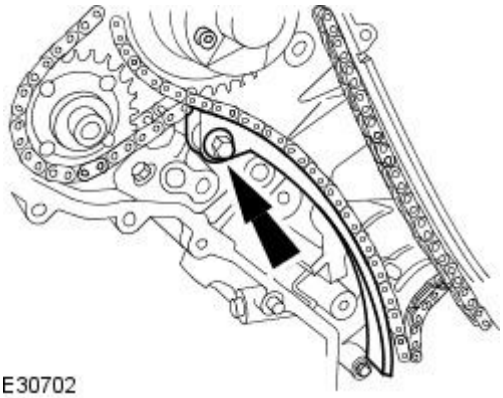
E30702

**12.** Install the primary timing chain tensioner guide.

- Tighten to 12 Nm.

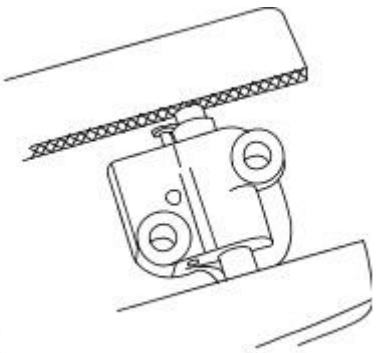
GA3138-B

**13.** CAUTION: Use suitable protective covers on the vice jaws to protect the timing chain tensioner.

Secure the right-hand timing chain tensioner in the vice jaws.

GETtheMANUALS.org

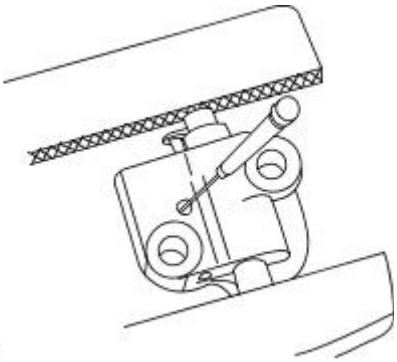

GA3139-B

**14.** CAUTION: During timing chain tensioner compression, do not release the ratchet stem until the timing chain tensioner piston is fully bottomed in its bore or damage to the ratchet stem will result.

Using a suitable tool, hold the right-hand timing chain tensioner ratchet lock mechanism away from the ratchet stem.

**15.** NOTE: The timing chain tensioner piston should retract with minimal force. If binding occurs, reposition the timing chain tensioner to eliminate side loading.

Slowly compress the right-hand timing chain tensioner.

**16.** NOTE: The retaining tool must remain in the timing chain tensioner until the timing chain tensioner is installed to the engine with the piston bottomed in the bore.

Using a suitable tool, retain the right-hand timing chain tensioner piston.

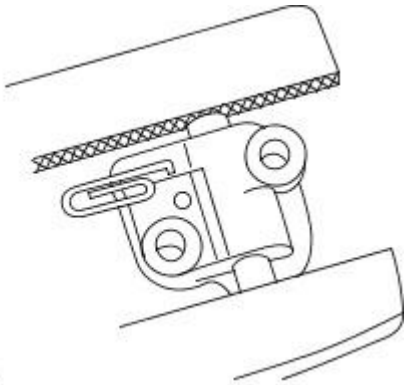

GA3140-A

**17.** Install the primary timing chain tensioner assembly.

- Tighten to 12 Nm.

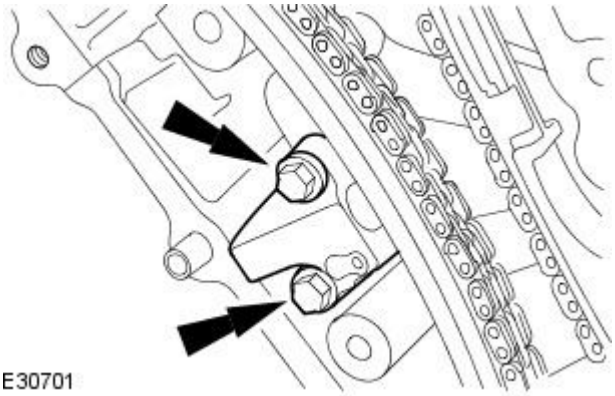

E30701

**18.** Release the tension in the right-hand timing chain tensioner.

- Remove the retaining tool.

**19.** CAUTIONS:

While applying the opposing force to sprocket and chain, tighten the sprocket bolt.

Make sure that a new bolt is installed.

Using the special tool, apply force to the tool in an anti-clockwise direction to tension the primary timing chain on its drive side.

- Tighten to 20 Nm + 90 deg.

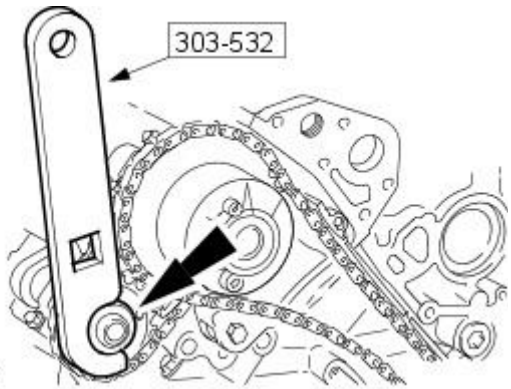


E31271

GETtheMANUALS.org

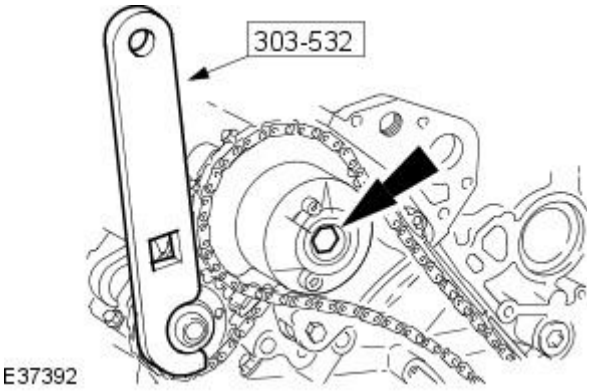


**20.** CAUTIONS:

While applying the opposing force to sprocket and chain, tighten the sprocket bolt.

Make sure that a new bolt is installed.

Using the special tool apply force to the tool in an anti-clockwise direction.

- Tighten to 20 Nm + 90 deg.

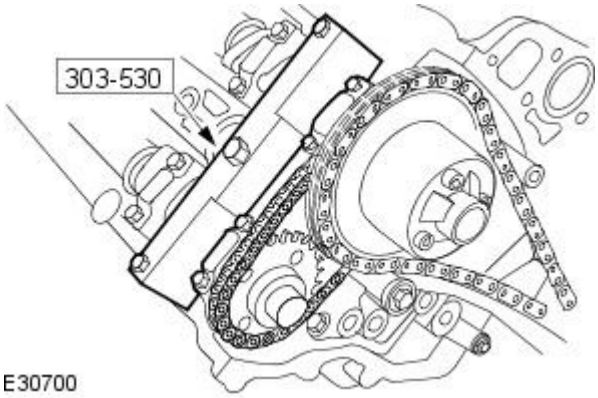


**21.** Remove the special tool from the right-hand cylinder head.

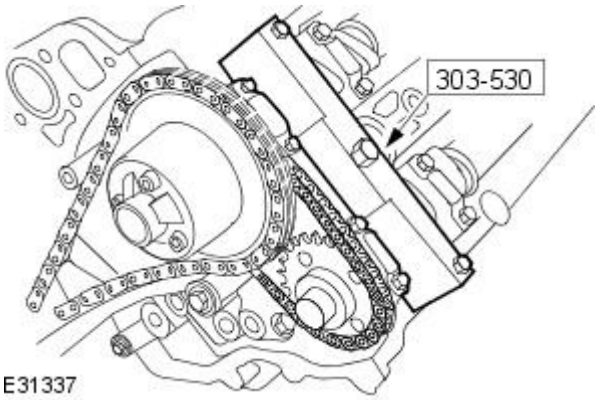


**22.** Remove the special tool from the left-hand cylinder head.

Vehicles without supercharger

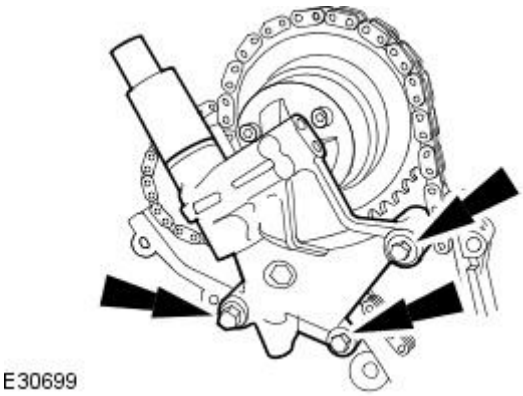


**23.** Install the right-hand variable camshaft timing oil control unit housing.

- Install new O-ring seals.
- Tighten to 22 Nm.

All vehicles

**24.** Carry out the valve clearance check.
For additional information, refer to: Valve Clearance Check (303-01B Engine - V8 4.2L Petrol/V8 S/C 4.2L Petrol, General Procedures).

**25.** Install the engine front cover.
For additional information, refer to: Engine Front Cover - VIN Range: M45255->N52047 (303-01B Engine - V8 4.2L Petrol/V8 S/C 4.2L Petrol, In-vehicle Repair).

GETtheMANUALS.org

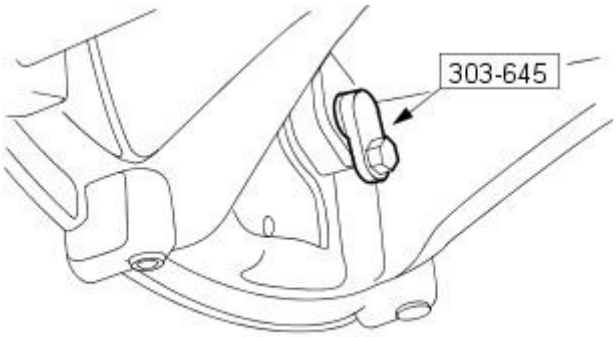


VUJ0002400

**26.** Remove the special tool.

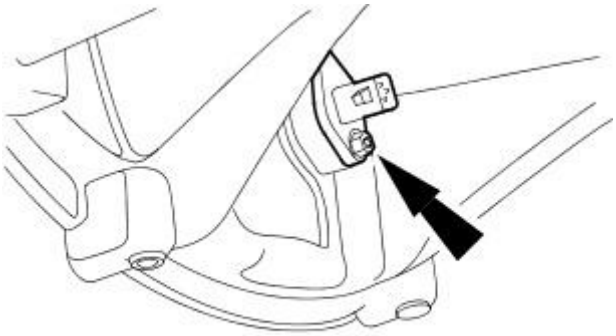

E30694

**27.** Install the CKP sensor.

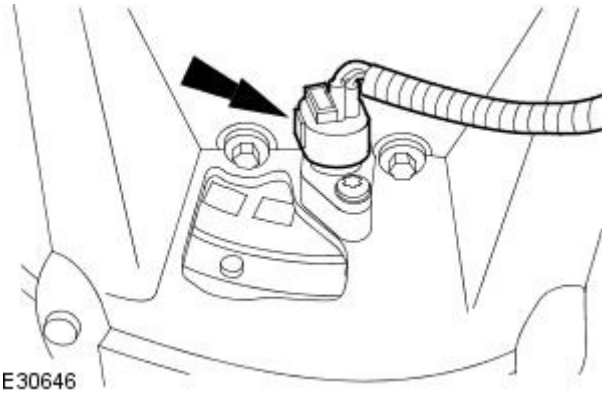

E30646

**28.** Connect the CKP sensor electrical connector.

**29.** Install the air deflector.
For additional information, refer to: Air Deflector (501-02 Front End Body Panels, Removal and Installation).

GETtheMANUALS.org

# Engine - V8 4.2L Petrol/V8 S/C 4.2L Petrol - Camshafts RHVIN Range: N52048->N99999

In-vehicle Repair

| Special Tool(s) | |
|---|---|
| 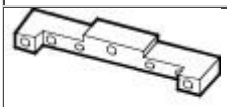 303-530 | Camshaft setting<br><br>303-530 |
| DWST021 | Timing chain tensioning tool<br><br>303-532 |
| DWST032 | Crankshaft setting, main tool<br><br>303-645 |

## Removal

1. Remove the engine front cover.
   For additional information, refer to: Engine Front Cover - VIN Range: N52048->N99999 (303-01B Engine - V8 4.2L Petrol/V8 S/C 4.2L Petrol, In-vehicle Repair).
2. Raise the vehicle.
3. Disconnect the crankshaft position (CKP) sensor electrical connector.

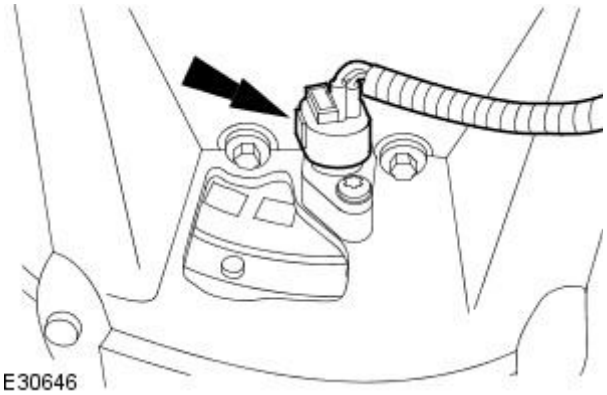

E30646

4. Remove the CKP sensor.

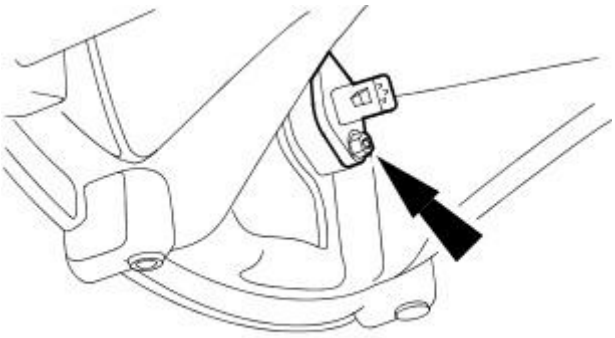

E30694

GETtheMANUALS.org

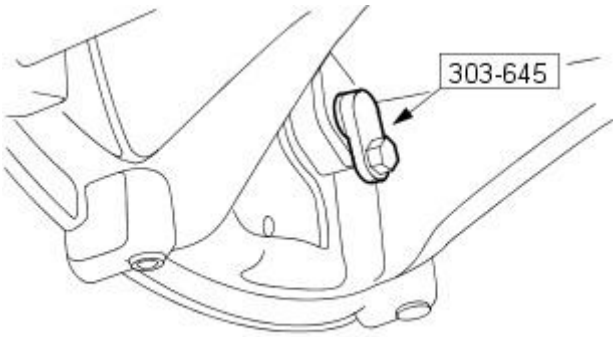


VUJ0002400

5. Install the special tool.

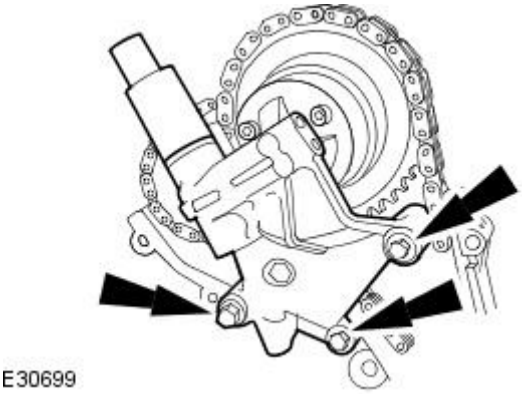

E30699

6. Lower the vehicle.
7. Remove the right-hand variable camshaft timing oil control unit housing.
   - Remove and discard the O-ring seals.

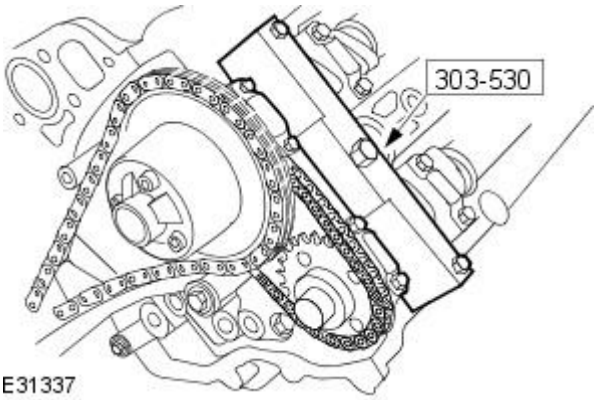


E31337

8. Install the special tool to the left-hand cylinder head.

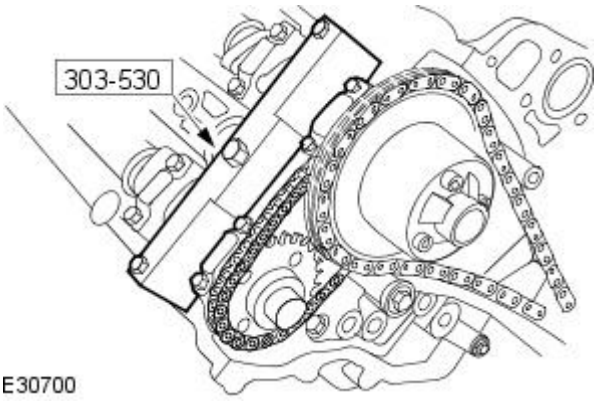


E30700

9. Install the special tool to the right-hand cylinder head.

GETtheMANUALS.org

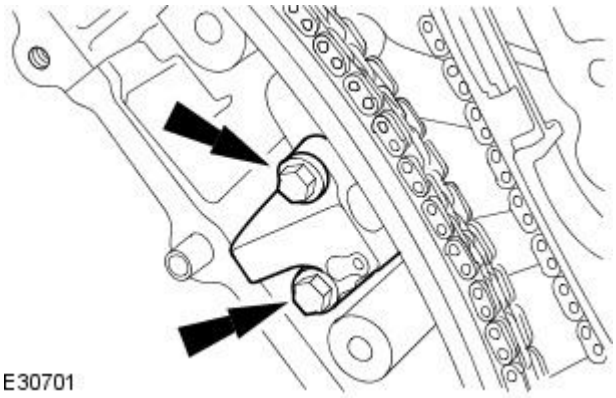
E30701

**10.** Remove the primary timing chain tensioner assembly.

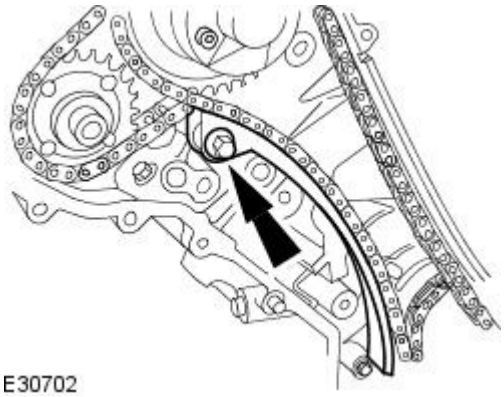
E30702

**11.** Remove the primary timing chain tensioner guide.

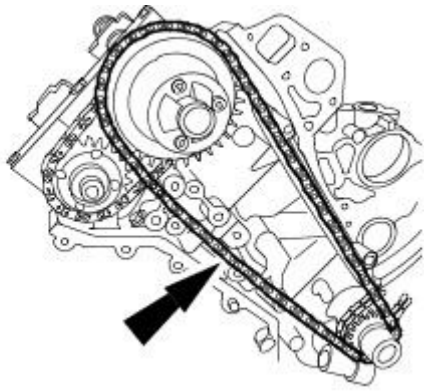
E30703

**12.** Remove the primary timing chain.

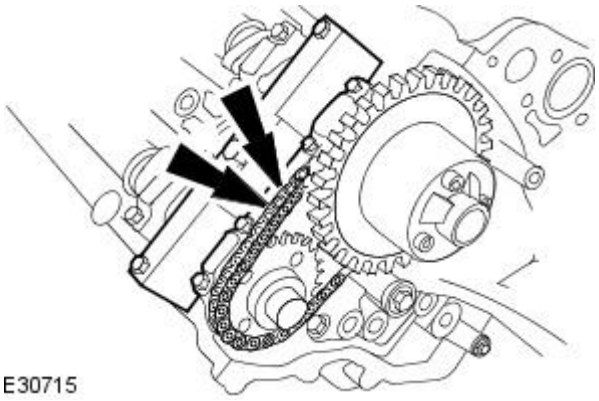
E30715

**13.** Remove the secondary timing chain tensioner retaining bolts.

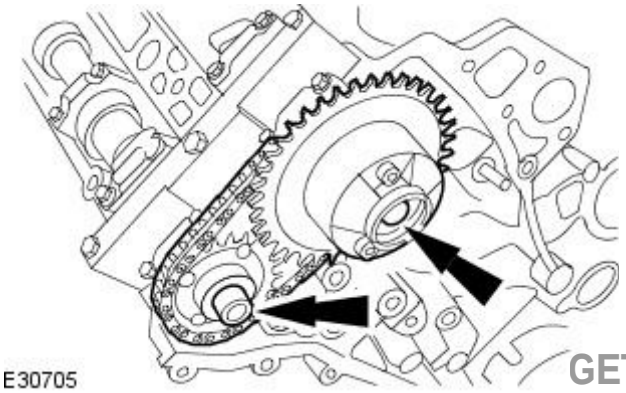
E30705

**14.** Remove the camshaft sprockets.

- Remove the secondary timing chain tensioner and secondary timing chain from the camshaft sprockets.

GETtheMANUALS.org

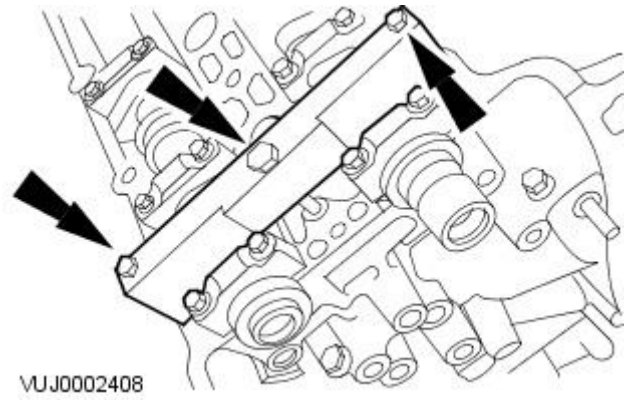


**15.** Remove the camshaft setting tool.

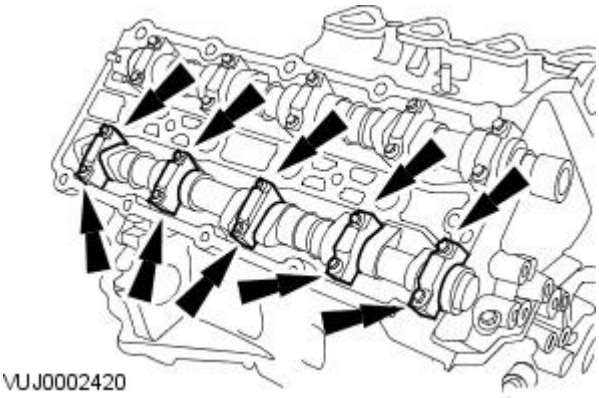


**16.** Remove the camshaft bearing caps.

- Remove the camshaft bearing cap retaining bolts evenly and in stages.
- Remove the camshaft bearing caps. Note their orientation and markings, each is marked with its position (a number) and orientation (an arrow).

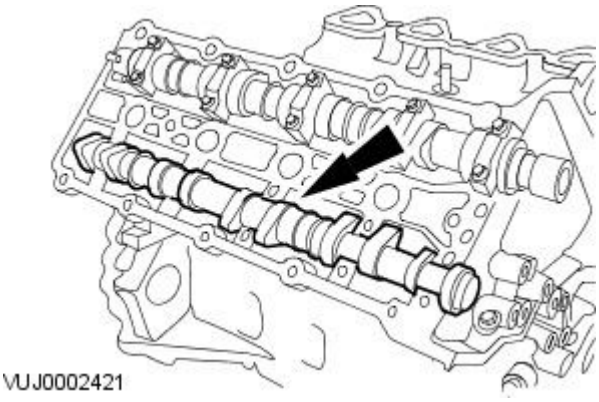


**17.** Remove the right-hand exhaust camshaft.

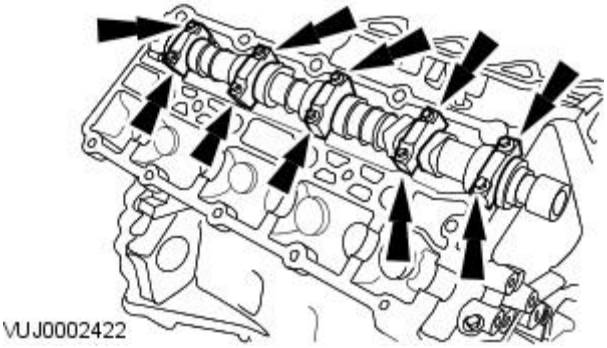


**18.** Remove the camshaft bearing caps.

- Remove the camshaft bearing cap retaining bolts evenly and in stages.
- Remove the camshaft bearing caps. Note their orientation and markings, each is marked with its position (a number) and orientation (an arrow).

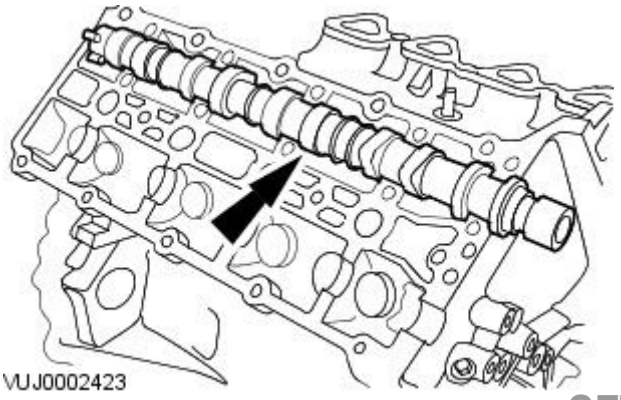


**19.** Remove the right-hand intake camshaft.

GETtheMANUALS.org

## Installation

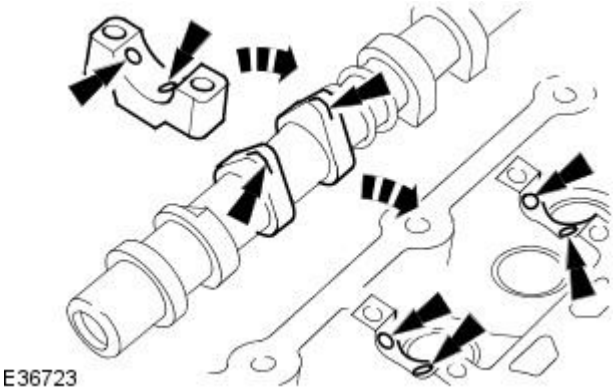


**1.** NOTE: Make sure all components are clean.

Apply oil (EP-90) to the camshaft and bearing surfaces, as follows:

- To the upper face of each bearing surface in the cylinder head.
- To the upper face of each bearing surface in each bearing cap.
- On the cam lobes ONLY, not on the base circle area.

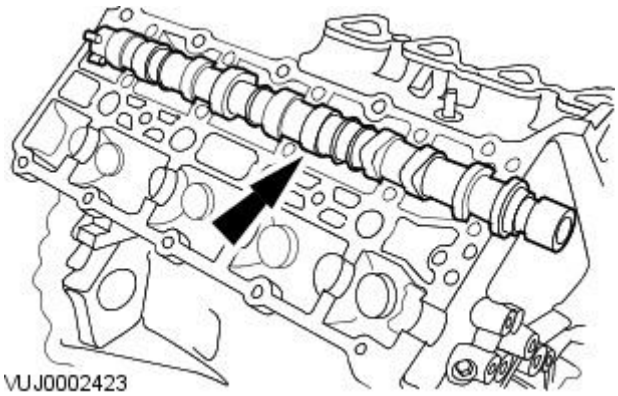


**2.** Install the right-hand inlet camshaft.

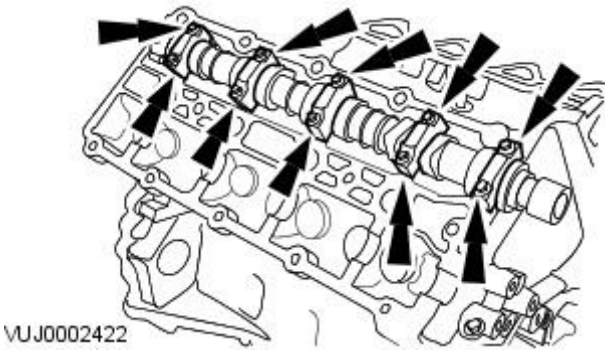


**3.** CAUTION: Alternate bolt tightening to correctly seat the camshaft bearing caps.

Install the camshaft bearing cap bolts evenly.

- Tighten to 10 Nm.

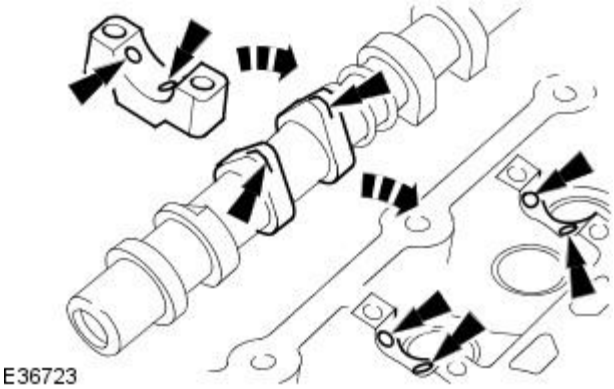


**4.** NOTE: Make sure all components are clean.

Apply oil (EP-90) to the camshaft and bearing surfaces, as follows:

- To the upper face of each bearing surface in the cylinder head.
- To the upper face of each bearing surface in each bearing cap.
- On the cam lobes ONLY, not on the base circle area.

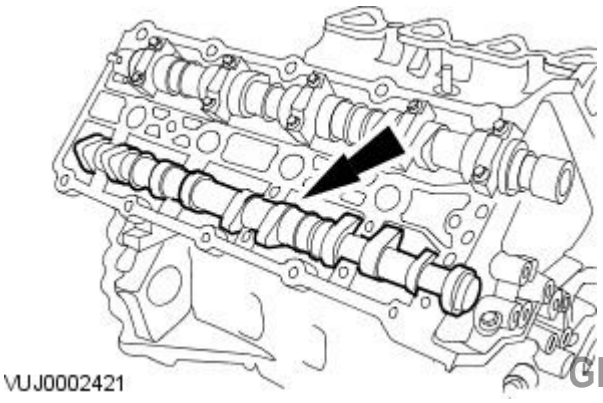


**5.** Install the right-hand exhaust camshaft.

GETtheMANUALS.org

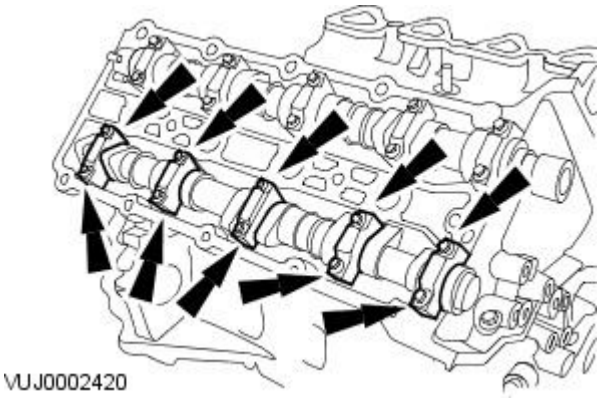


**6.** CAUTION: Alternate bolt tightening to correctly seat the camshaft bearing caps.

Install the camshaft bearing cap bolts evenly.

- Tighten to 10 Nm.

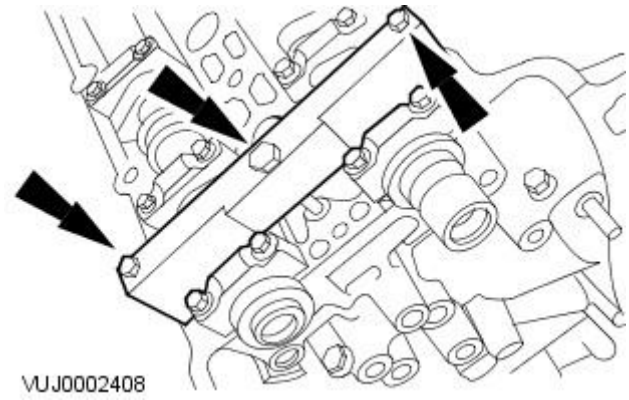


**7.** Install the camshaft setting tool.

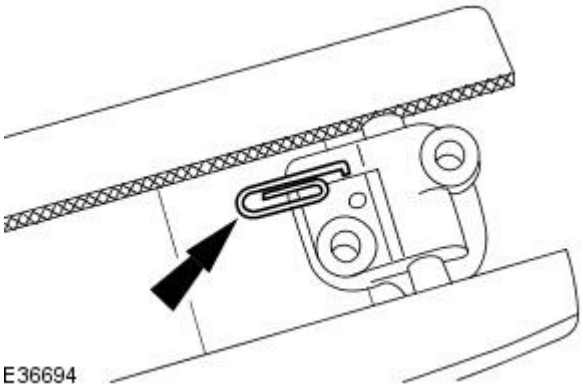


**8.** Using a suitable tool, retain the right-hand timing chain tensioner piston.

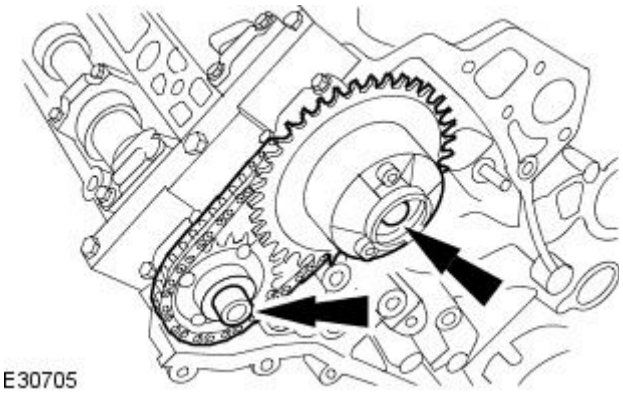


**9.** CAUTIONS:

Do not tighten the camshaft sprocket retaining bolts.

Make sure the secondary timing chain and camshaft sprockets are free to rotate.

Install the camshaft sprockets.

- Install the secondary timing chain tensioner and secondary timing chain to the camshaft sprockets.

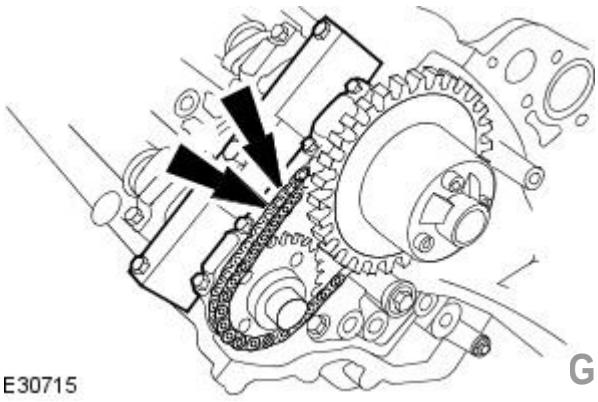


**10.** Install the secondary timing chain tensioner retaining bolts.

- Tighten to 12 Nm.

GETtheMANUALS.org

**11.** Release the tension in the right-hand timing chain tensioner.

- Remove the retaining tool.

**12.** Install the timing chain tensioning tool 303-532 to the exhaust camshaft sprocket.

- Reposition the camshaft sprockets for the most advantageous position for use of the tool.

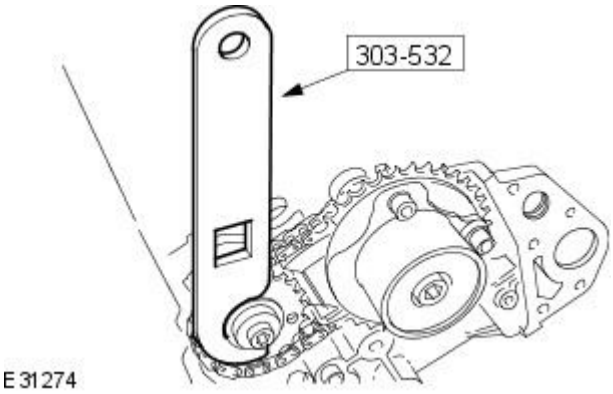


**13.** CAUTION: Make sure the timing chain slack is on the tensioned side of the timing chain.

Install the primary timing chain.

- Install the primary chain over the crankshaft sprocket and the intake sprocket.

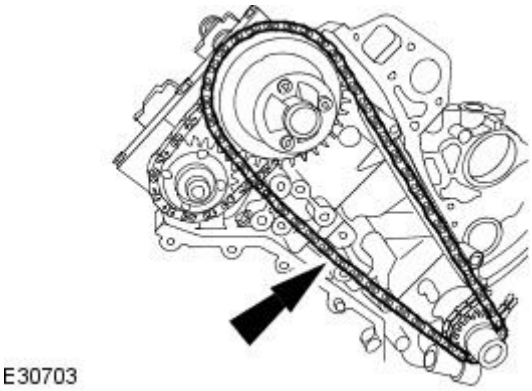


**14.** Install the primary timing chain tensioner guide.

- Tighten to 12 Nm.

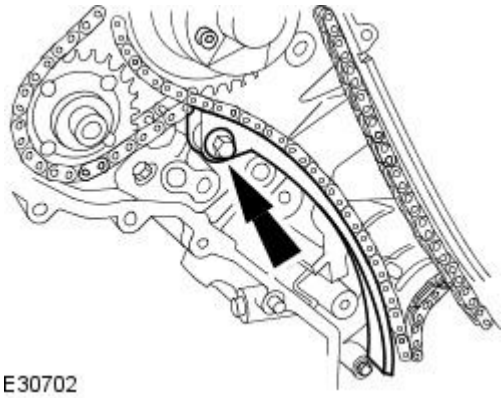


**15.** CAUTION: During timing chain tensioner compression, do not release the ratchet stem until the timing chain tensioner piston is fully bottomed in its bore or damage to the ratchet stem will result.

Using a suitable tool, hold the right-hand timing chain tensioner ratchet lock mechanism away from the ratchet stem.

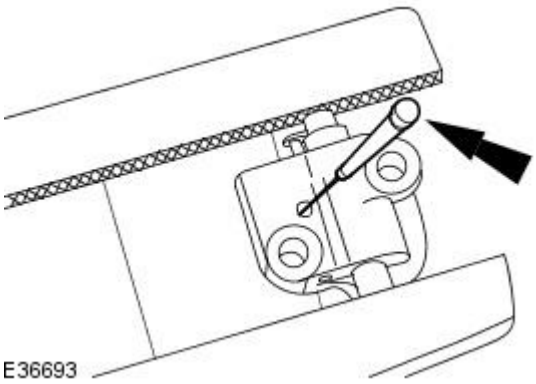


**16.** NOTE: The timing chain tensioner piston should retract with minimal force. If binding occurs, reposition the timing chain tensioner to eliminate side loading.

Slowly compress the right-hand timing chain tensioner.

GETtheMANUALS.org

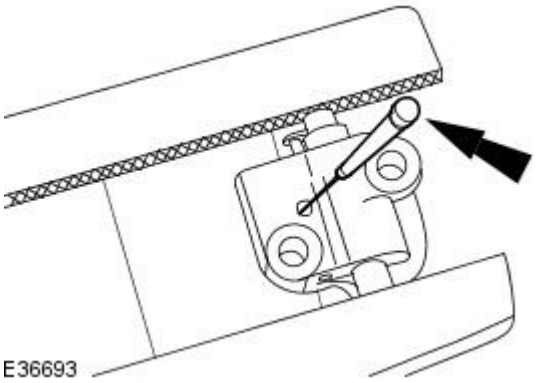


**17.** NOTE: The retaining tool must remain in the timing chain tensioner until the timing chain tensioner is installed to the engine with the piston bottomed in the bore.

Using a suitable tool, retain the right-hand timing chain tensioner piston.

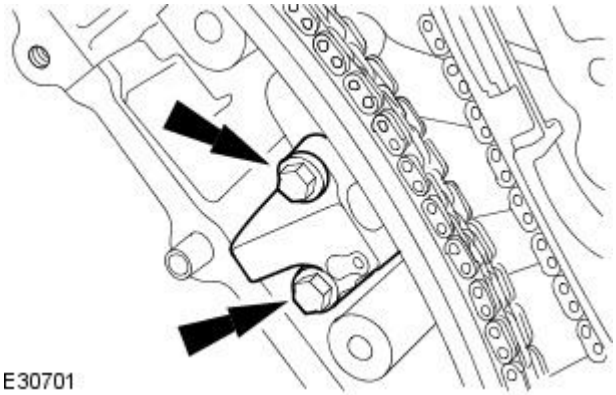


**18.** Install the primary timing chain tensioner assembly.

- Tighten to 12 Nm.

**19.** Release the tension in the right-hand timing chain tensioner.

- Remove the retaining tool.

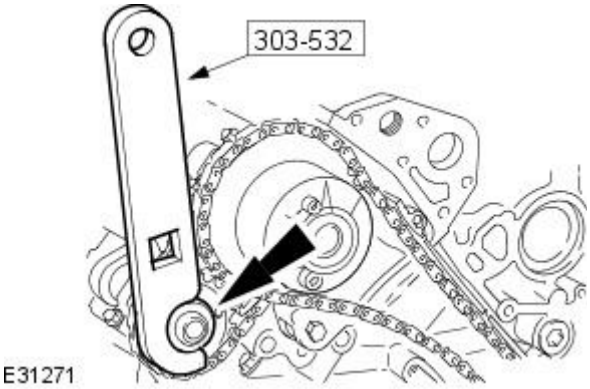


**20.** CAUTIONS:

While applying the opposing force to sprocket and chain, tighten the sprocket bolt.

Make sure that a new bolt is installed.

Using the special tool, apply force to the tool in an anti-clockwise direction to tension the primary timing chain on its drive side.

- Tighten to 20 Nm + 90 deg.

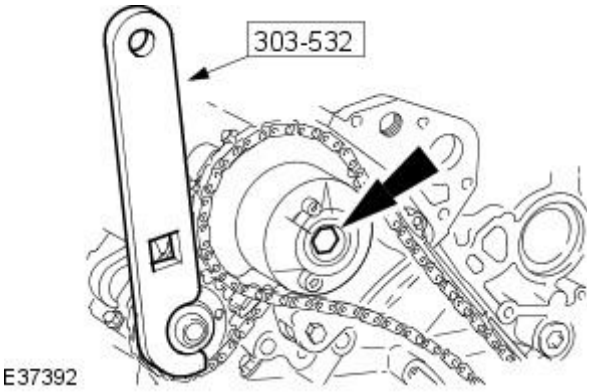


**21.** CAUTIONS:

While applying the opposing force to sprocket and chain, tighten the sprocket bolt.

Make sure that a new bolt is installed.

Using the special tool, apply force to the tool in an anti-clockwise direction.

- Tighten to 20 Nm + 90 deg.

GETtheMANUALS.org

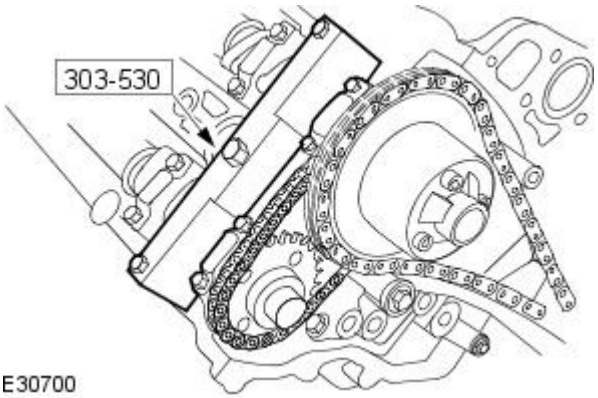

E30700

**22.** Remove the special tool from the right-hand cylinder head.

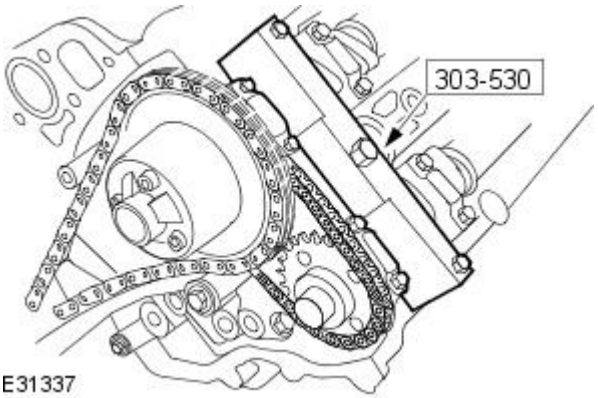

E31337

**23.** Remove the special tool from the left-hand cylinder head.

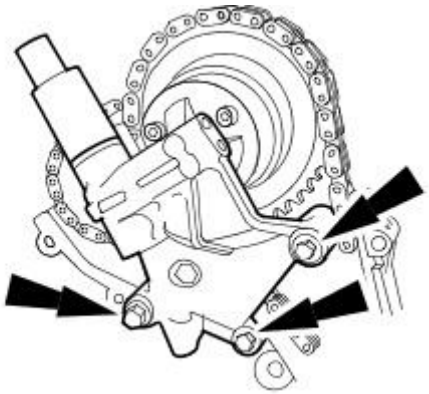
E30699

**24.** Install the right-hand variable camshaft timing oil control unit housing.

- Install new O-ring seals.
- Tighten to 22 Nm.

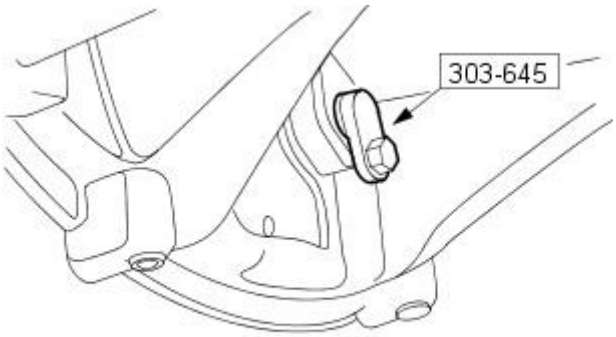

VUJ0002400

**25.** Raise the vehicle.

**26.** Remove the special tool.

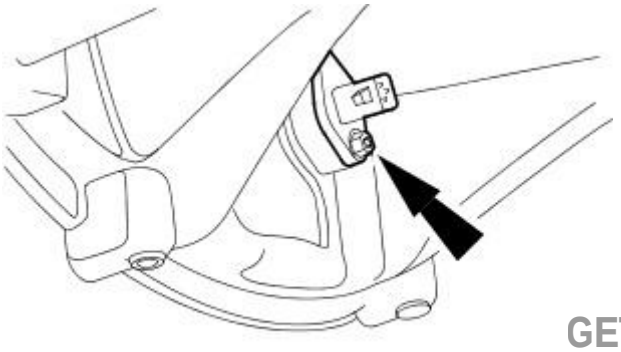
E30694

**27.** Install the CKP sensor.

- Tighten to 10 Nm.

GETtheMANUALS.org

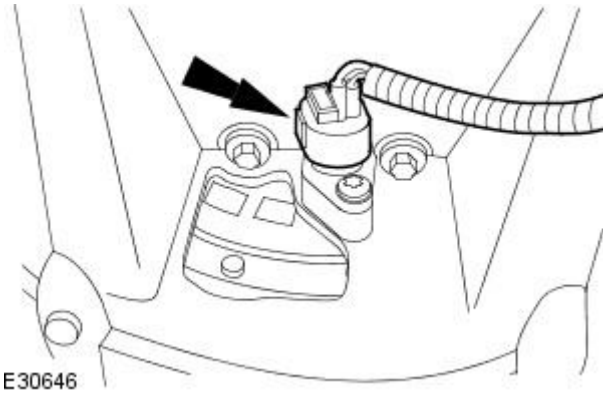


**28.** Connect the CKP sensor electrical connector.

**29.** Lower the vehicle.

**30.** Carry out the valve clearance check.
For additional information, refer to: Valve Clearance Check (303-01B Engine - V8 4.2L Petrol/V8 S/C 4.2L Petrol, General Procedures).

**31.** Install the engine front cover.
For additional information, refer to: Engine Front Cover - VIN Range: N52048->N99999 (303-01B Engine - V8 4.2L Petrol/V8 S/C 4.2L Petrol, In-vehicle Repair).

GETtheMANUALS.org

# Engine - V8 4.2L Petrol / V8 S/C 4.2L Petrol - Crankshaft Front Seal

In-vehicle Repair

| Special Tool(s) | |
|---|---|
| 303-750 | Installer, crankshaft front seal<br><br>303-750 |
| 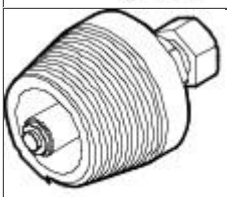 303-751 | Remover, crankshaft front seal<br><br>303-751 |

## Removal

1. Remove the crankshaft pulley.
   For additional information, refer to Crankshaft Pulley in this section.
2. Using the special tool, remove the crankshaft front seal.

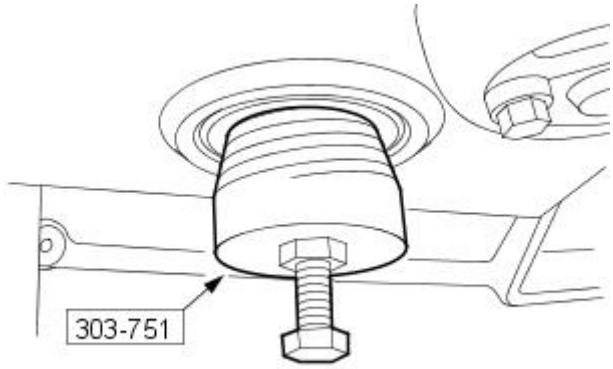


E31171

## Installation

1. CAUTIONS:

   Make sure the crankshaft front seal mating faces are clean and dry.

   Do not remove the crankshaft front seal protector.

   Using the special tool, install the crankshaft front seal.

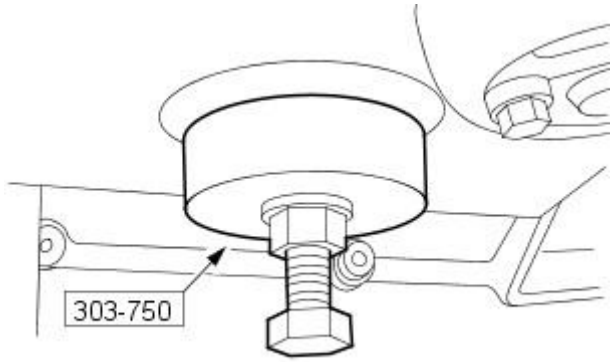


E31173

2. Remove the crankshaft seal protector.

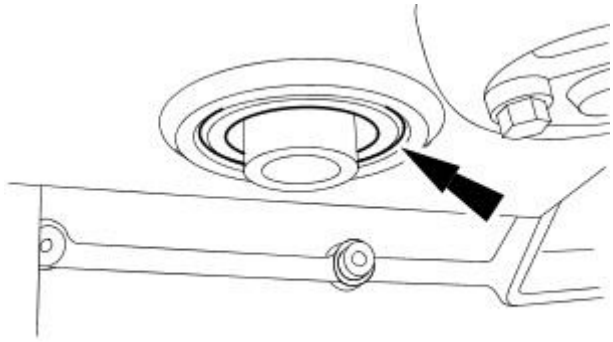

E31172

3. Install the crankshaft pulley.
   For additional information, refer to Crankshaft Pulley in this section.

GETtheMANUALS.org

# Engine - V8 4.2L Petrol/V8 S/C 4.2L Petrol - Crankshaft Pulley

In-vehicle Repair

| Special Tool(s) | |
|---|---|
| 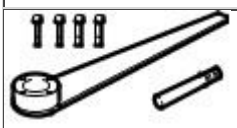 303-191 | Locking Tool, Crankshaft Pulley<br><br>303-191 |
| 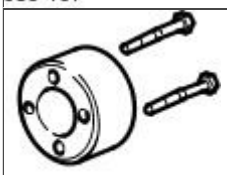 303-191-02 | Adapter for 303-191/303-588<br><br>303-191-02 |
| 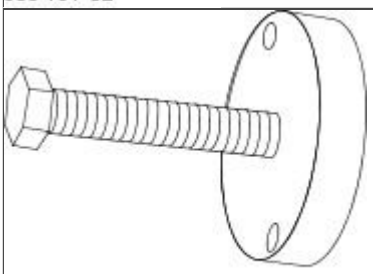 303-58 | Remover, Crankshaft Pulley<br><br>303-588 |
| 303-752 | Installer/remover, Oil Filter<br><br>303-752 |

## Removal

All vehicles

1. Remove the cooling fan motor and shroud.
   For additional information, refer to: Cooling Fan Motor and Shroud (303-03A Engine Cooling - V8 4.2L Petrol/V8 S/C 4.2L Petrol/2.5L NA V6 - AJV6/3.0L NA V6 - AJ27, Removal and Installation).
2. Remove the accessory drive belt .
   For additional information, refer to: Accessory Drive Belt - 4.2L (303-05, Removal and Installation).

Vehicles without supercharger

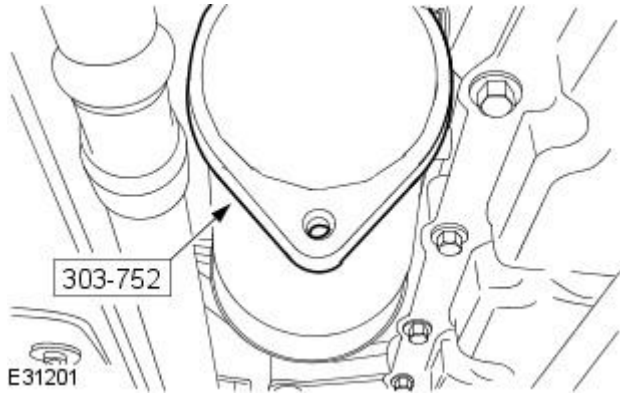


3. NOTE: Place a suitable container underneath the filter to prevent oil spillage.

   Using the special tool, remove and discard the oil filter element.

GETtheMANUALS.org

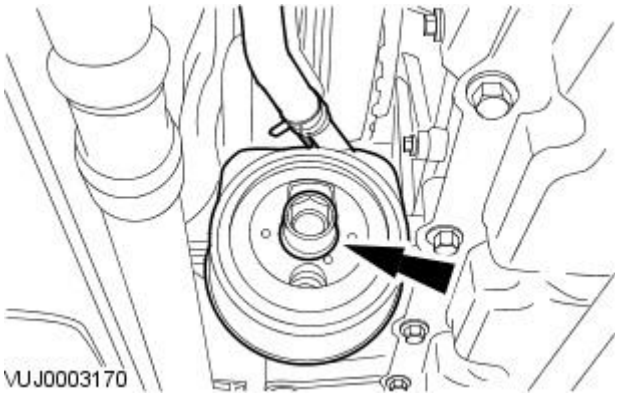


**4.** Detach the oil cooler.

- Remove and discard the O-ring seal.

**5.** Lower the vehicle

All vehicles

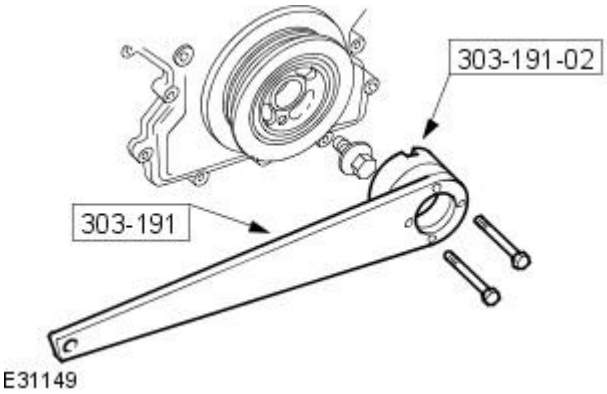


**6.** CAUTION: Under no circumstances should special tool 303-645 be used in the following operations to lock the crankshaft. Failure to follow this instruction may result in damage to the vehicle.

• NOTE: The crankshaft pulley retaining bolt will be very tight.

Using special tools, retain the crankshaft pulley.

- Remove and discard the crankshaft pulley retaining bolt.

**7.** Remove the special tools.

**8.** NOTE: The crankshaft pulley will be very tight.

Using special tools, remove the crankshaft pulley.

- Collect the locking ring.
- Remove and discard the O-ring seal.

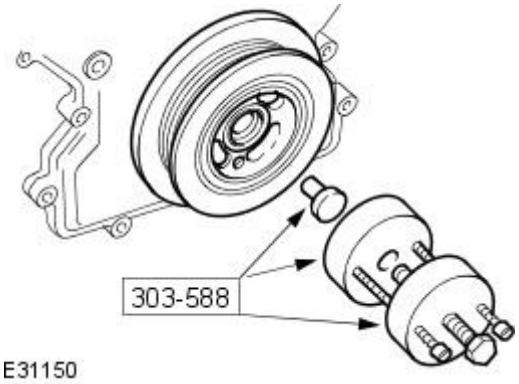


**9.** Remove the special tools.

**10.** Remove the crankshaft front seal.
For additional information, refer to: Crankshaft Front Seal (303-01B Engine - V8 4.2L Petrol/V8 S/C 4.2L Petrol, In-vehicle Repair).

**11.** NOTE: Check crankshaft pulley and locking ring for damage.

Clean all crankshaft pulley mating faces.

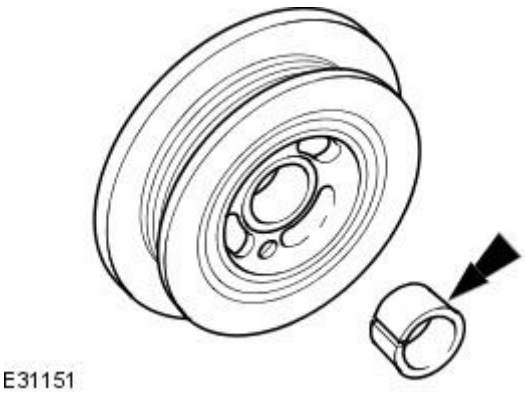


## Installation

All vehicles

**1.** Install a new crankshaft front seal.
For additional information, refer to: Crankshaft Front Seal (303-01B Engine - V8 4.2L Petrol/V8 S/C 4.2L Petrol, In-vehicle Repair).

GETtheMANUALS.org

**2.** Install a new O-ring seal to the crankshaft pulley.

- Lubricate the new O-ring seal.

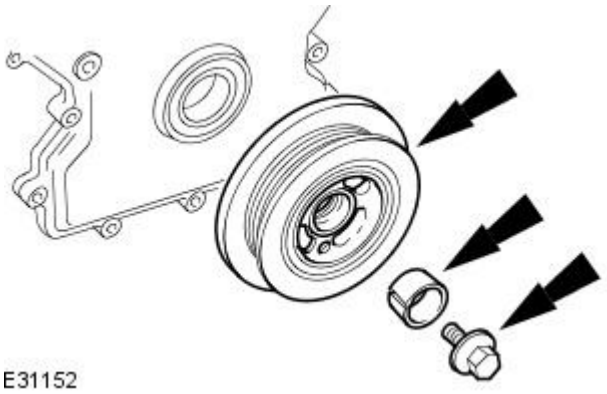


**3.** CAUTIONS:

The screw thread in the crankshaft must be cleaned out before a new crankshaft pulley retaining bolt is installed. Failure to follow this instruction may result in damage to the vehicle.

A new crankshaft pulley retaining bolt must be used. Failure to follow this instruction may result in damage to the vehicle.

Loosely installx a new crankshaft pulley retaining bolt.

- Install the crankshaft pulley and locking ring to the crankshaft.

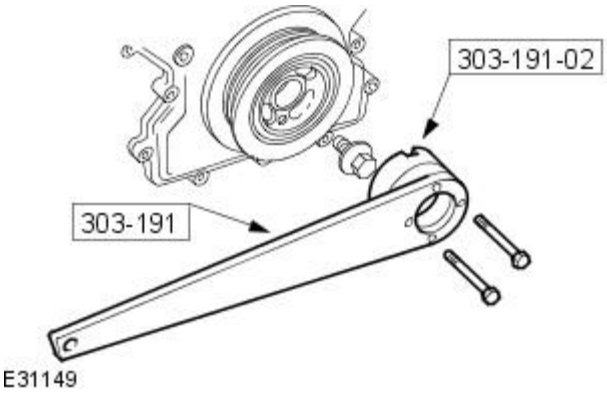


**4.** CAUTION: Under no circumstances should the special tool 303-645 be used in the following operations to lock the crankshaft. Failure to follow this instruction may result in damage to the vehicle.

Using special tools, retain the crankshaft pulley.

- Tighten the crankshaft pulley retaining bolt to 320 Nm.

**5.** Remove the special tools.

Vehicles without supercharger

**6.** Raise the vehicle.

**7.** Attach the oil cooler.

- Install a new O-ring seal.
- Tighten to 55 Nm.

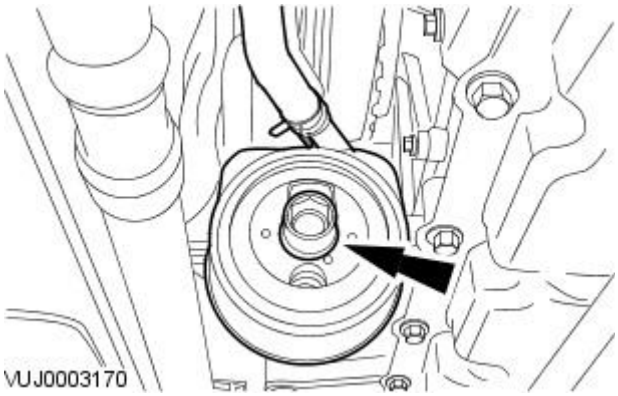


**8.** NOTE: Apply a suitable amount of clean engine oil to lubricate the oil filter O-ring seal.

Using special tool, install a new oil filter.

- Tighten to 18 Nm.

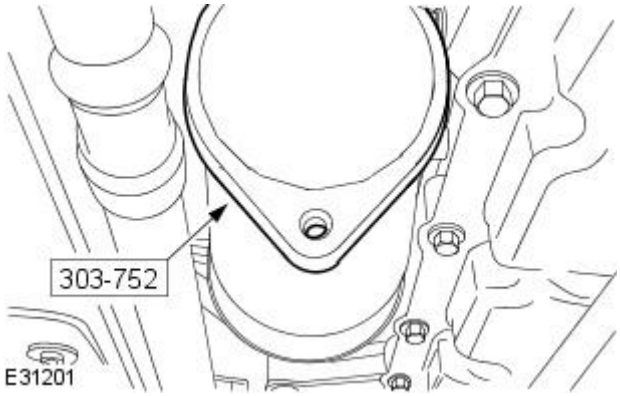


All vehicles

**9.** Install the accessory drive belt.
For additional information, refer to: Accessory Drive Belt - 4.2L (303-05, Removal and Installation).

**10.** Install the cooling fan motor and shroud.
For additional information, refer to: Cooling Fan Motor and Shroud (303-03A Engine Cooling - V8 4.2L Petrol/V8 S/C 4.2L Petrol/2.5L NA V6 - AJV6/3.0L NA V6 - AJ27, Removal and Installation).

**11.** Check and top up the engine oil to the correct level on the oil level indicator.

GETtheMANUALS.org

# Engine - V8 4.2L Petrol / V8 S/C 4.2L Petrol - Crankshaft Rear Seal

In-vehicle Repair

| Special Tool(s) | |
|---|---|
| 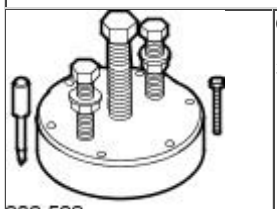 303-538 | Crankshaft rear seal remover/replacer<br><br>303-538 |

## Removal

1. Remove the flexplate.
   For additional information, refer to Flexplate in this section.
2. Install the special tool.

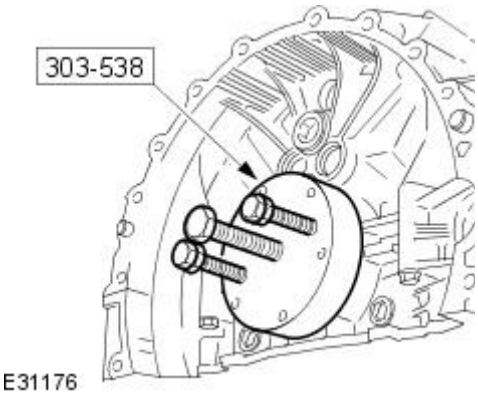

E31176

3. Reposition the special tool retaining nuts.

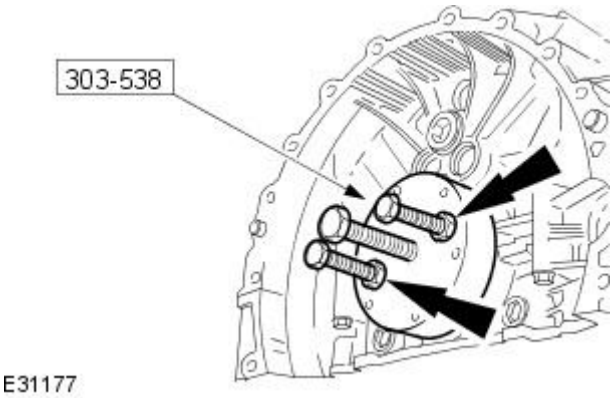

E31177

4. Using the special tool pierce the seal face and provide a pilot hole for the self-tapping screws.

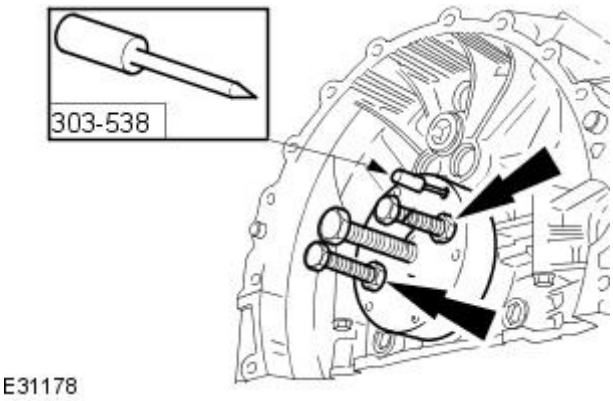

E31178

GETtheMANUALS.org

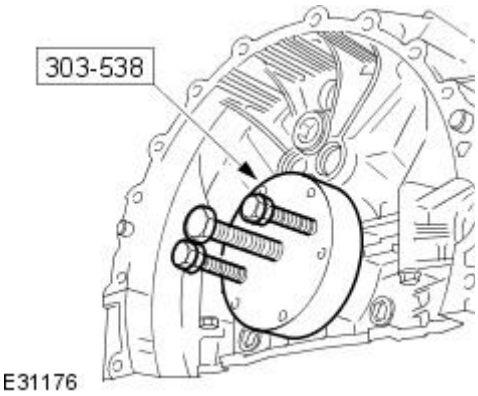


5. Loosen the special tool retaining nuts.

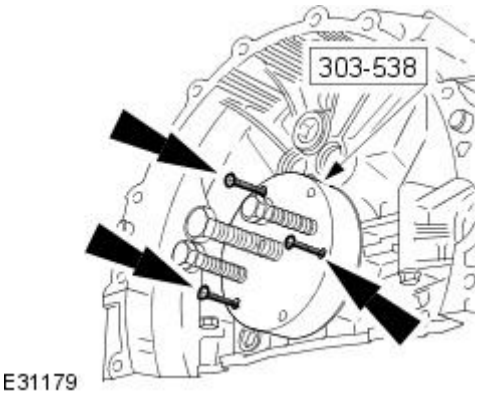


6. CAUTION: To prevent damage to special tool do not tighten screws more than one and a half turns.

   Install the special tool self-tapping screws.

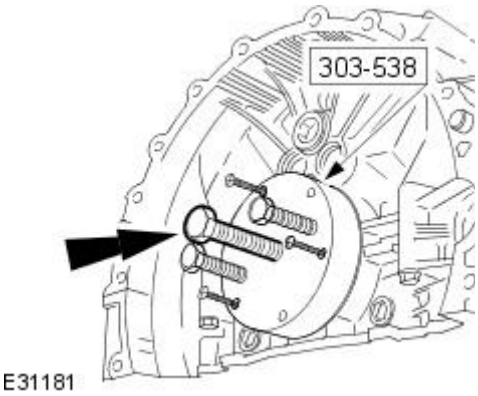


7. Using the special tool remove and discard the crankshaft rear seal.

## Installation

1. NOTE: Make sure all components are clean and dry.

   Make sure the transit sleeve is correctly in place and install the new seal over the crankshaft. Do not use any lubricant on the seal, the transit sleeve or the crankshaft.

2. Carefully remove the transit sleeve, leaving the seal in place.
3. Install the special tool to the crankshaft.

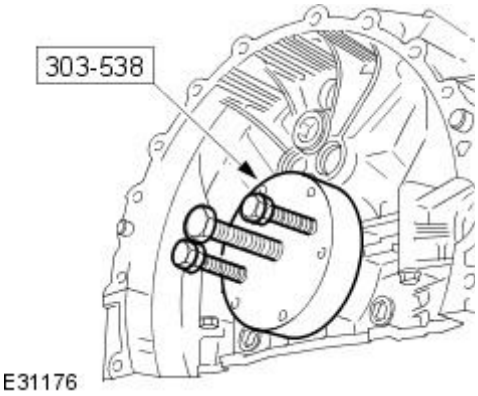


GETtheMANUALS.org

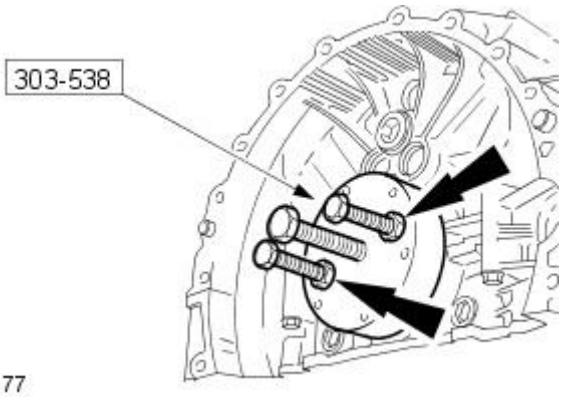


E31177

4. Reposition the nuts to hold the special tool against the crankshaft rear seal. Check that the crankshaft rear seal and the special tool are parallel to the rear of the engine.

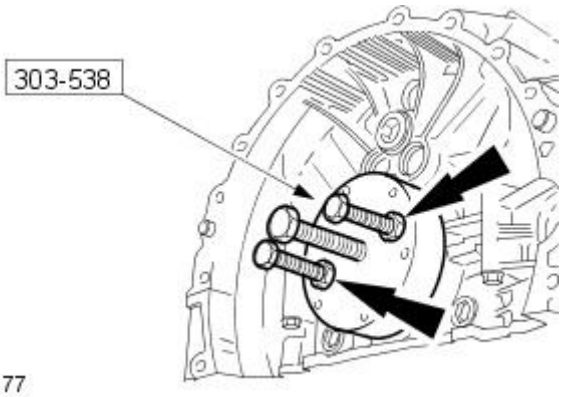


E31177

5. CAUTION: Alternate nut tightening to correctly seat the crankshaft rear seal.

Using the special tool, install the crankshaft rear seal.

6. Remove the special tool from the crankshaft.
   - Check that the seal is located correctly.

7. Install the flexplate.
   For additional information, refer to Flexplate in this section.

GETtheMANUALS.org

# Engine - V8 4.2L Petrol/V8 S/C 4.2L Petrol - Cylinder Head LHVIN Range: M45255->N52047

In-vehicle Repair

| Special Tool(s) | |
|---|---|
| 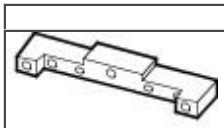 303-530 | Camshaft setting<br><br>303-530 |
| DWST021 | Timing chain tensioning tool<br><br>303-532 |
| 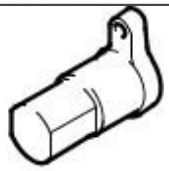 DWST032 | Crankshaft setting, main tool<br><br>303-645 |

## Removal

All vehicles

CAUTION: If a replacement cylinder head is to be installed to a vehicle with variable camshaft timing (VCT) the cylinder head must have the oil gallery blind rivet removed before installation.

1. Remove the air deflector.
   For additional information, refer to: Air Deflector (501-02 Front End Body Panels, Removal and Installation).
2. Disconnect the crankshaft position sensor electrical connector.

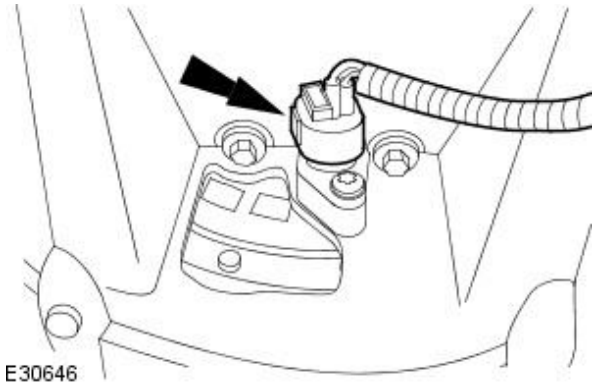

E30646

3. Remove the crankshaft position sensor.

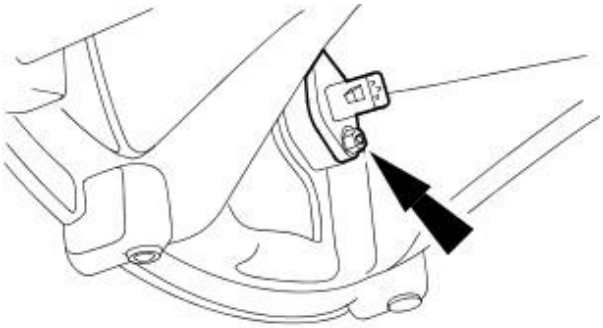

E30694

GETtheMANUALS.org

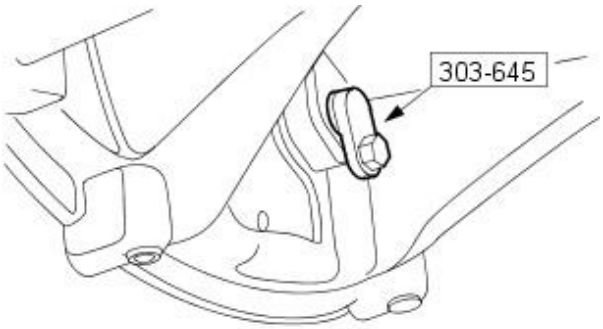


VUJ0002400

**4.** Remove the special tool.

**5.** Remove the engine front cover.
For additional information, refer to: Engine Front Cover - VIN Range: N52048->N99999 (303-01B Engine - V8 4.2L Petrol/V8 S/C 4.2L Petrol, In-vehicle Repair).

Vehicles without supercharger

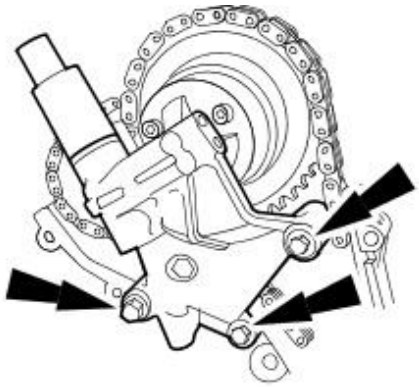

E30699

**6.** Remove the right-hand variable camshaft timing oil control unit housing.

- Remove and discard the O-ring seals.

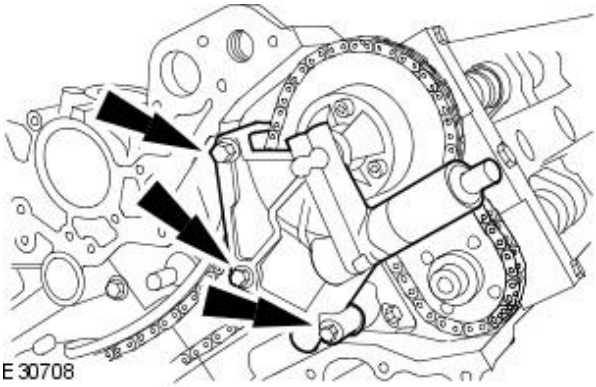

E30708

**7.** Remove the left-hand variable camshaft timing oil control unit housing.

- Remove and discard the O-ring seals.

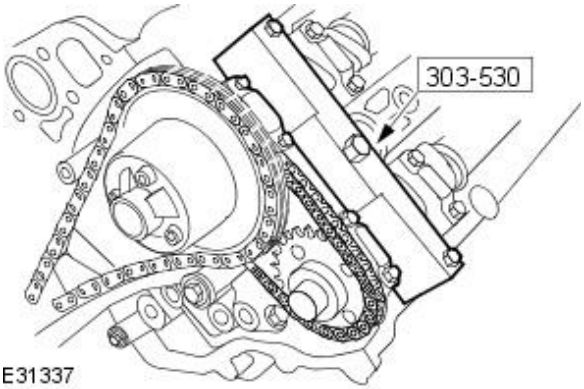


E31337

**8.** Install the special tool to the left-hand cylinder head.

GETtheMANUALS.org

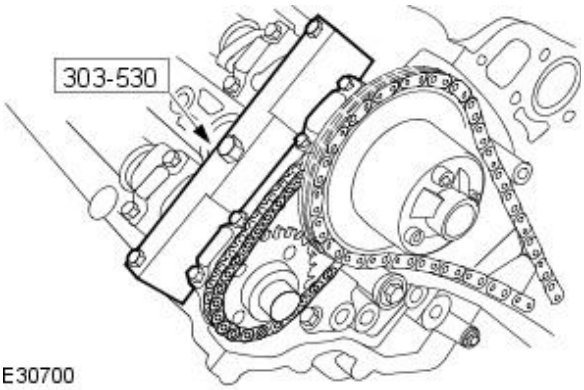

E30700

**9.** Install the special tool to the Right-hand cylinder head.

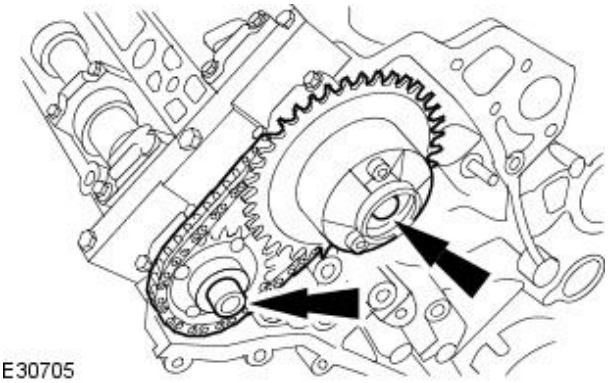
E30705

**10.** CAUTION: Make sure the secondary timing chain and camshaft sprockets are free to rotate.

Loosen the camshaft sprockets.

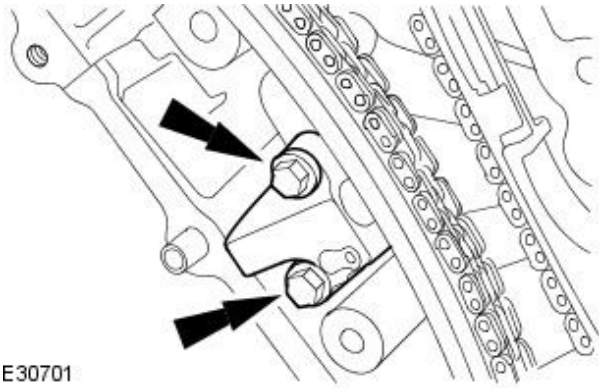
E30701

**11.** Remove the primary timing chain tensioner assembly.

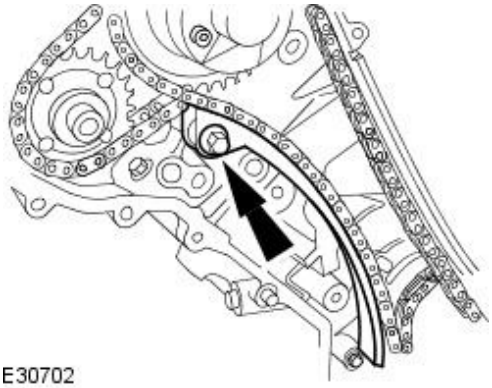
E30702

**12.** Remove the primary timing chain tensioner guide.

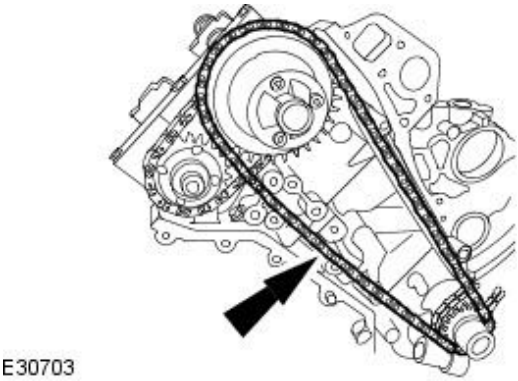
E30703

**13.** Remove the primary timing chain.

GETtheMANUALS.org

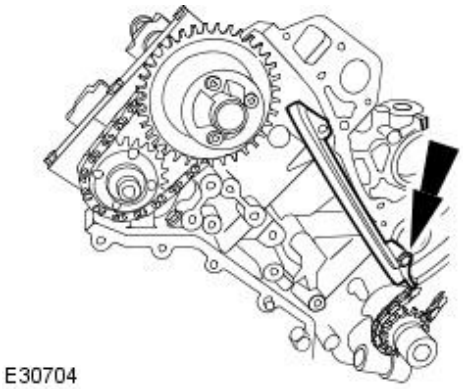


**14.** Remove the primary timing chain guide.

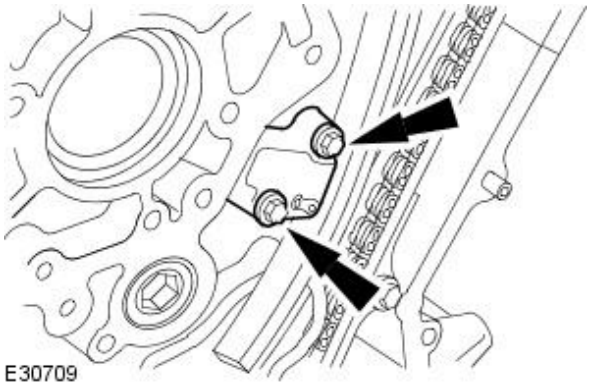


**15.** Remove the primary timing chain tensioner assembly.

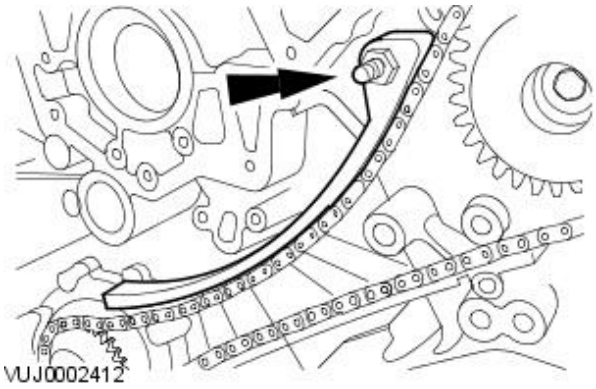


**16.** Remove the primary timing chain tensioner guide.

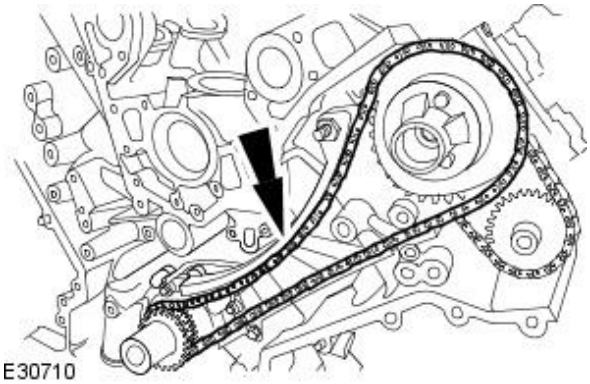


**17.** Remove the primary timing chain.

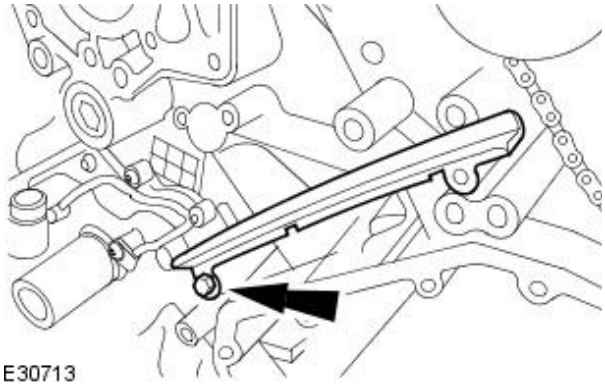


**18.** Remove the primary timing chain tensioner guide.

GETtheMANUALS.org

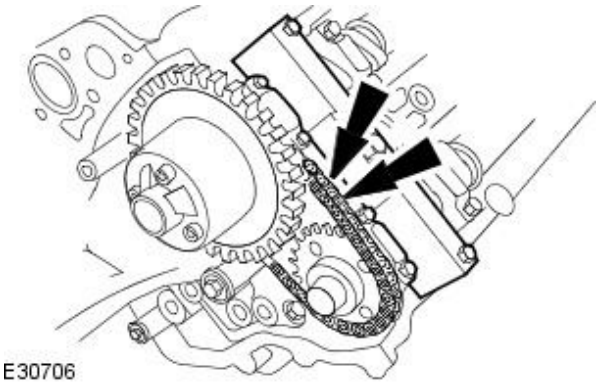


**19.** Remove the secondary timing chain tensioner retaining bolts.

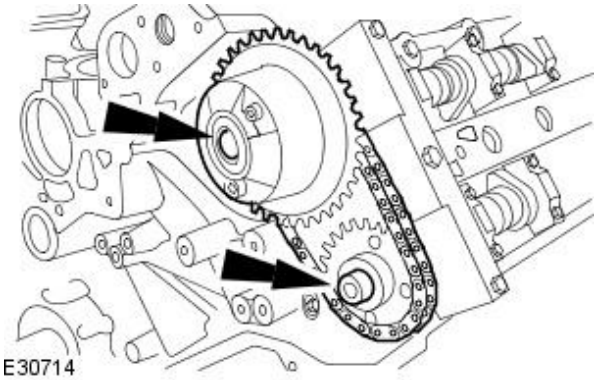


**20.** Remove the camshaft sprockets.

- Remove the secondary timing chain tensioner and secondary timing chain from the camshaft sprockets.

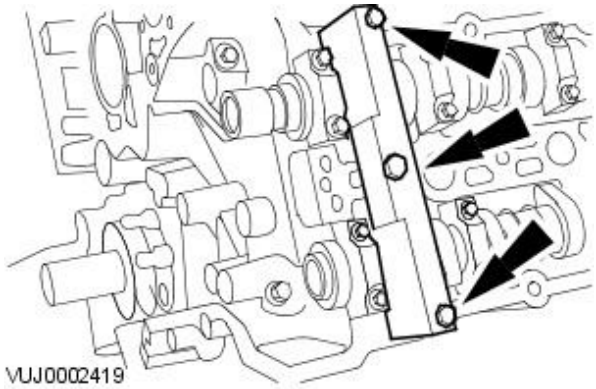


**21.** Remove the camshaft setting tool.

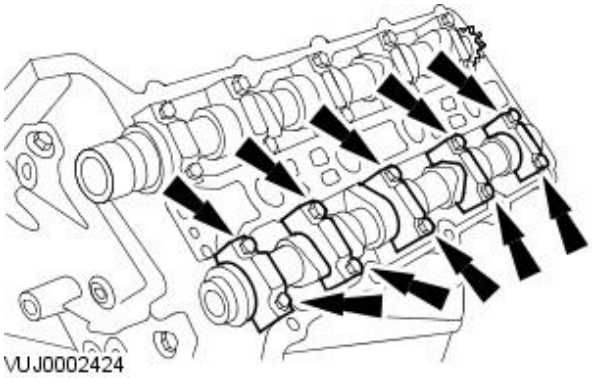


**22.** Remove the camshaft bearing caps.

- Remove the camshaft bearing cap retaining bolts evenly and in stages.
- Remove the camshaft bearing caps. Note their orientation and markings, each is marked with its position (a number) and orientation (an arrow).

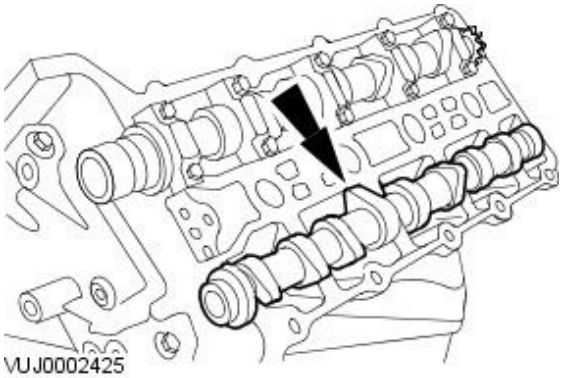


**23.** Remove the left-hand exhaust camshaft.

GETtheMANUALS.org

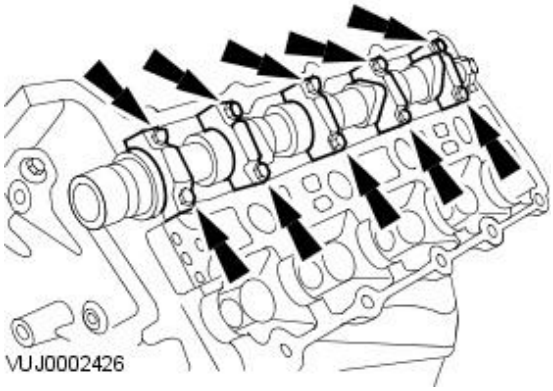


**24.** Remove the camshaft bearing caps.

- Remove the camshaft bearing cap retaining bolts evenly and in stages.
- Remove the camshaft bearing caps. Note their orientation and markings, each is marked with its position (a number) and orientation (an arrow).

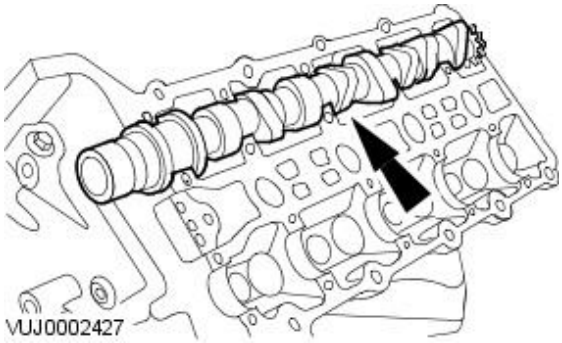


**25.** Remove the left-hand inlet camshaft.

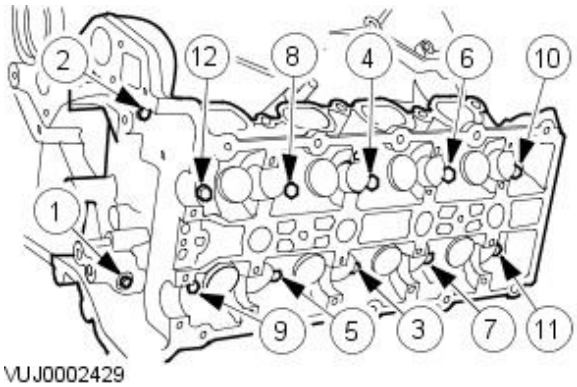


**26.** CAUTIONS:

The bolts can only be used twice, mark the bolts with a center punch. If two punch marks are visible, discard the bolts.

Vehicles fitted with Polydrive cylinder head bolts, the cylinder head bolts must be removed using a 10 mm Polydrive socket or a 10 mm Allen key. Failure to follow this instruction may result in damage to the component.

Remove the left-hand cylinder head.

- Remove the bolts in the indicated sequence.
- Remove and discard the gasket.

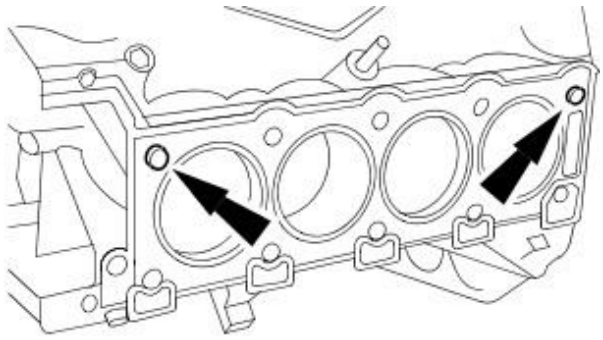


**27.** CAUTION: Only use a plastic scrapper to clean off old gasket.

Remove the cylinder head gasket.

- Clean the gasket mating faces.
- Clean the cylinder head locating dowels.

## Installation

All vehicles

GETtheMANUALS.org

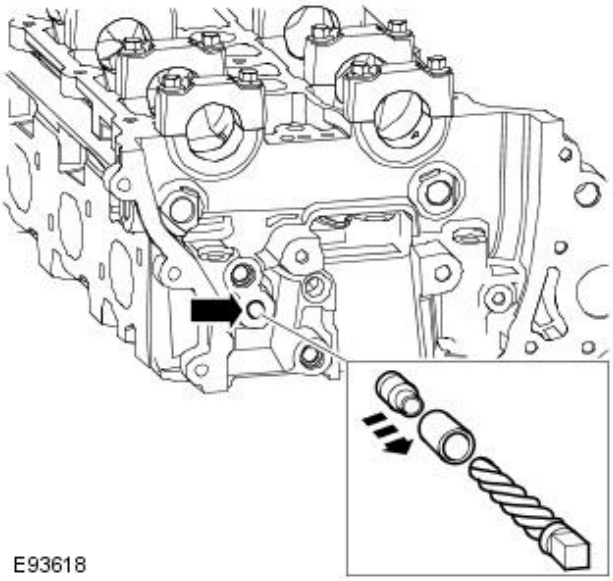


**1.** CAUTIONS:

If a replacement cylinder head is to be installed to a vehicle with VCT the cylinder head must have the oil gallery blind rivet removed before installation.

Make sure that all debris is removed from the cylinder head and cylinder head oil gallery.

Vehicles fitted with VCT: Remove the blind rivet from the VCT oil gallary.

• NOTE: The centre bore of the blind rivet is 6 mm (0.24 inch) diameter.

- Identify the VCT oil supply gallery and the 8 mm (0.31 inch) blind rivet.
- Using a suitable 3 mm (0.12 inch) punch release the centre of the blind rivet until it is released from the outer part of the blind rivet.
- Using a suitable extraction tool, remove the remaining part of the blind rivet.

**2.** Clean the component mating faces.

**3.** Check cylinder head face for distortion, across the center and from corner to corner.

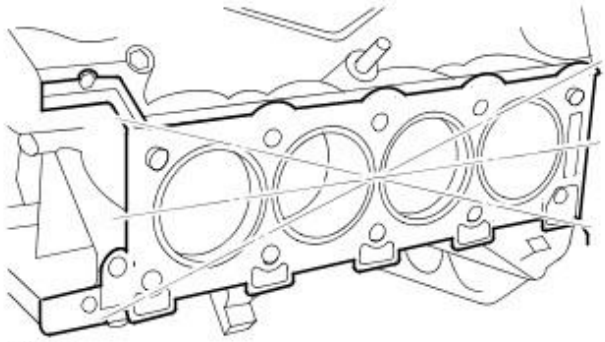


**4.** For cylinder head face distortion data, refer to specifications.
For additional information, refer to: Specifications (303-01B Engine - V8 4.2L Petrol/V8 S/C 4.2L Petrol, Specifications).

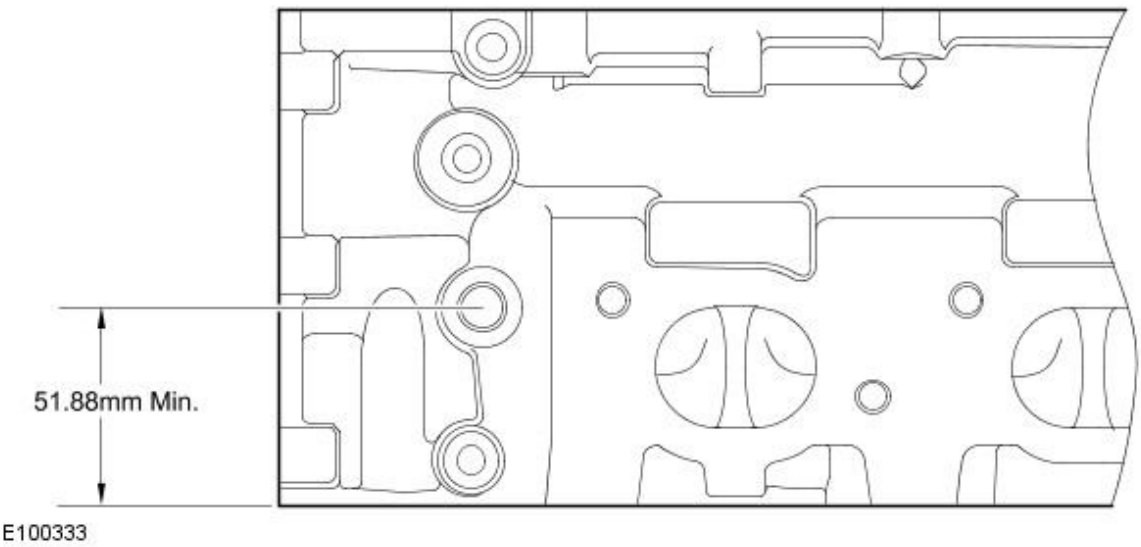


**5.** NOTE: For cylinder head with distortion above the maximum allowance, the cylinder head material must be measured.

Measure the cylinder head material.

- Check measurement from the centre of the exhaust dowel to the cylinder head face as shown.
- If the measurement is less than 51.88 mm the cylinder head requires replacement.

GETtheMANUALS.org

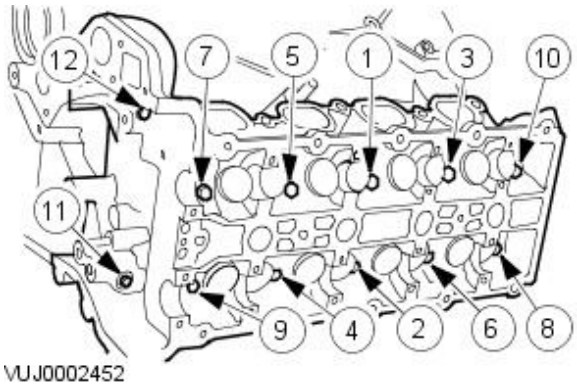


**6.** CAUTION: Vehicles fitted with Polydrive cylinder head bolts, the cylinder head bolts must be installed using a 10 mm Polydrive socket or a 10 mm Allen key. Failure to follow this instruction may result in damage to the component.

• NOTE: Tighten the bolts 1 to 10 in the sequence shown.

Install the left-hand cylinder head.

1. Tighten bolts 1 to 10 to 20 Nm.
2. Tighten bolts 1 to 10 to 35 Nm.
3. Tighten bolts 1 to 10 to 90°.
4. Tighten bolts 1 to 10 to 90°.
5. Tighten bolts 11 to 12 to 25 Nm.

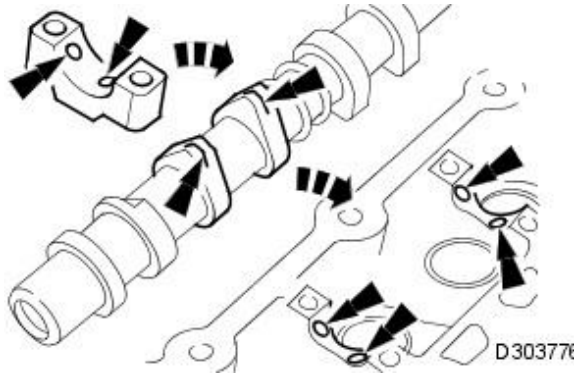


**7.** NOTE: Make sure all components are clean.

Apply oil (EP-90) to the camshaft and bearing surfaces, as follows:

- To the upper face of each bearing surface in the cylinder head.
- To the upper face of each bearing surface in each bearing cap.
- On the cam lobes ONLY, not on the base circle area.

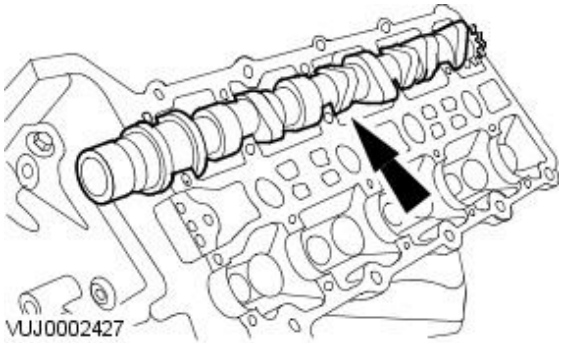


**8.** Install the left-hand inlet camshaft.

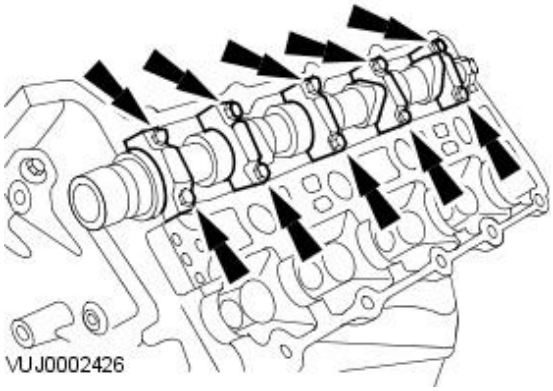


**9.** CAUTION: Alternate bolt tightening to correctly seat the camshaft bearing caps.

Install the camshaft bearing cap bolts evenly.

- Tighten to 10 Nm.

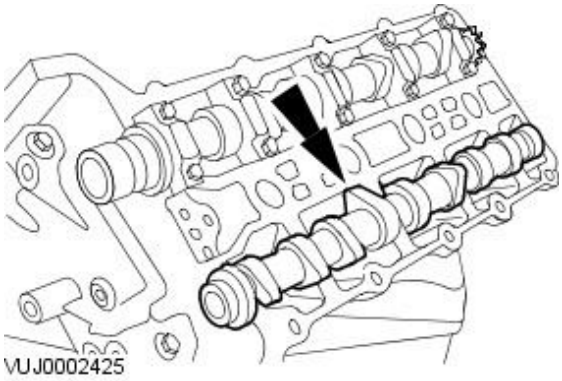


**10.** Install the left-hand exhaust camshaft.

GETtheMANUALS.org

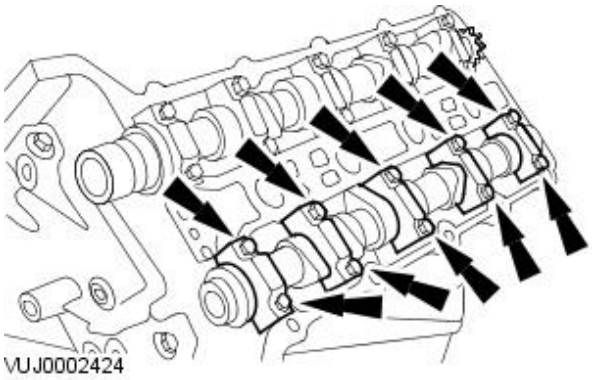


**11.** CAUTION: Alternate bolt tightening to correctly seat the camshaft bearing caps.

Install the camshaft bearing cap bolts evenly.

- Tighten to 10 Nm.

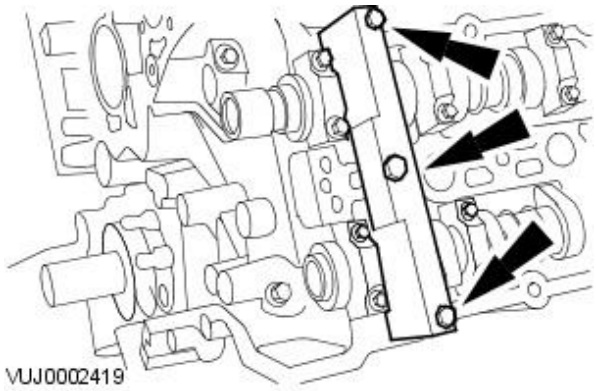


**12.** Install the camshaft setting tool.

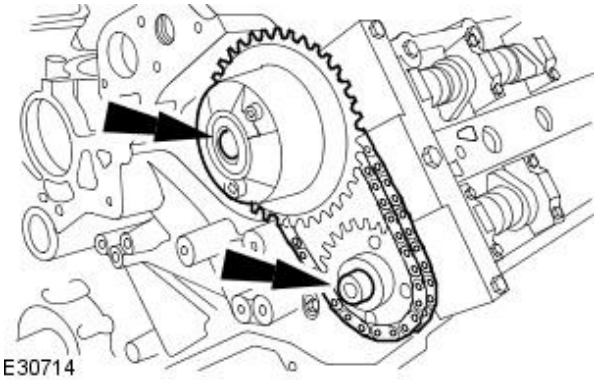


**13.** CAUTIONS:

Do not tighten the camshaft sprocket retaining bolts.

Make sure the secondary timing chain and camshaft sprockets are free to rotate.

Install the camshaft sprockets.

- Install the secondary timing chain tensioner and secondary timing chain to the camshaft sprockets.

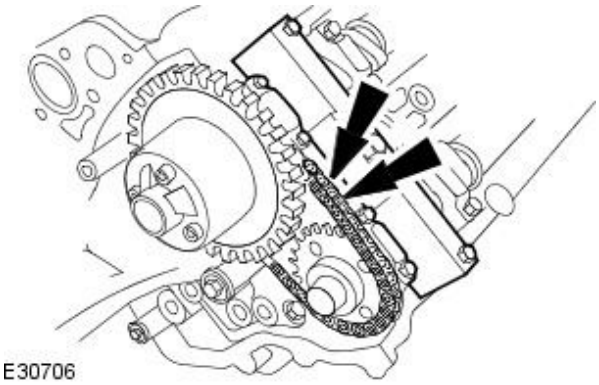


**14.** Install the secondary timing chain tensioner retaining bolts.

- Tighten to 12 Nm.

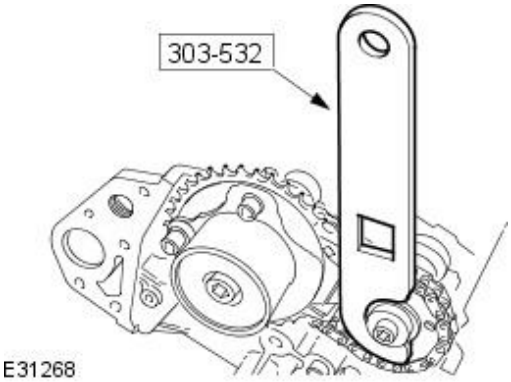


**15.** Install the timing chain tensioning tool 303-532 to the exhaust camshaft sprocket.

- Reposition the camshaft sprockets for the most advantageous position for use of the tool.

GETtheMANUALS.org

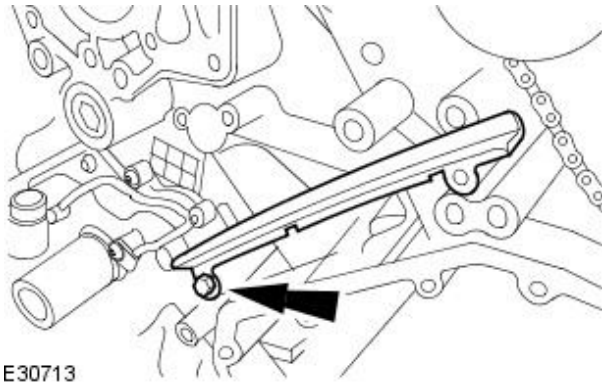


**16.** Install the primary timing chain tensioner guide.

- Tighten to 12 Nm.

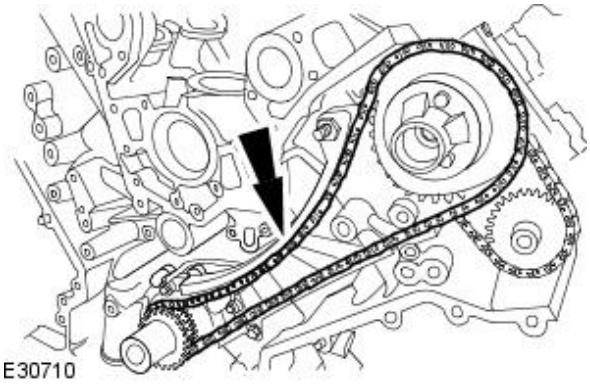


**17.** CAUTION: Make sure the timing chain slack is on the tensioned side of the timing chain.

Install the primary timing chain.

- Install the primary chain over the crankshaft sprocket and the intake sprocket.

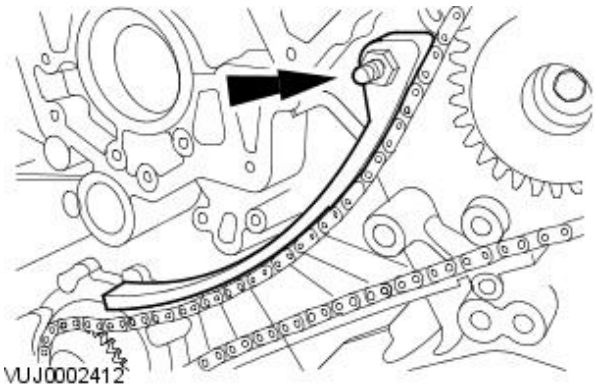


**18.** Install the primary timing chain tensioner guide.

- Tighten to 12 Nm.

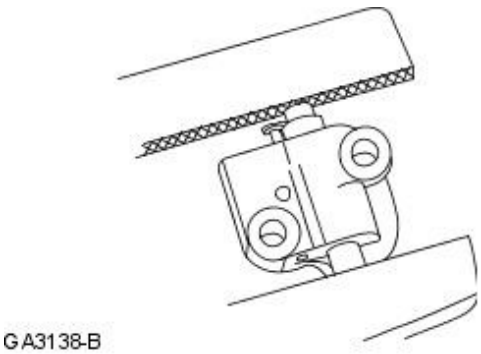


**19.** CAUTION: Use suitable protective covers on the vice jaws to protect the timing chain tensioner.

Secure the left-hand timing chain tensioner in the vice jaws.

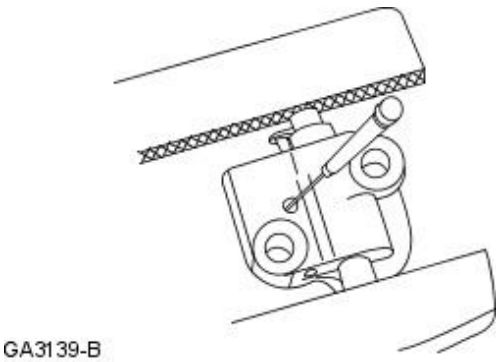


**20.** CAUTION: During timing chain tensioner compression, do not release the ratchet stem until the timing chain tensioner piston is fully bottomed in its bore or damage to the ratchet stem will result.

Using a suitable tool, hold the left-hand timing chain tensioner ratchet lock mechanism away from the ratchet stem.

**21.** NOTE: The timing chain tensioner piston should retract with minimal force. If binding occurs, reposition the timing chain tensioner to eliminate side loading.

GETtheMANUALS.org

Slowly compress the left-hand timing chain tensioner.

**22.** NOTE: The retaining tool must remain in the timing chain tensioner until the timing chain tensioner is installed to the engine with the piston bottomed in the bore.

Using a suitable tool, retain the left-hand timing chain tensioner piston.

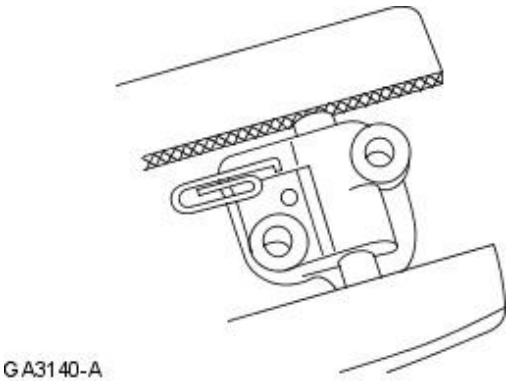


**23.** Install the primary timing chain tensioner assembly.

- Tighten to 12 Nm.

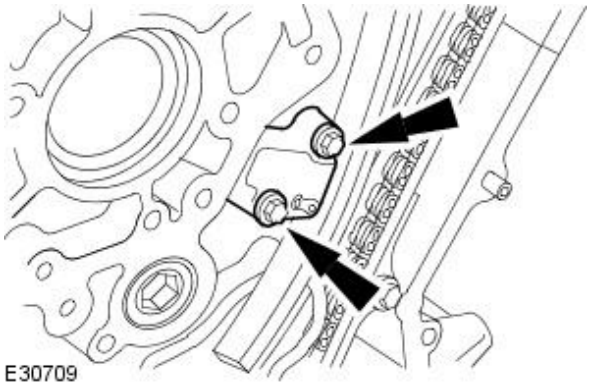


**24.** Release the tension in the left-hand timing chain tensioner.

- Remove the retaining tool.

**25.** CAUTIONS:

While applying the opposing force to sprocket and chain, tighten the sprocket bolt.

Make sure that a new bolt is installed.

Using the special tool apply force to the tool in an anti-clockwise direction to tension the primary timing chain on its drive side.

- Tighten to 20 Nm + 90 deg.

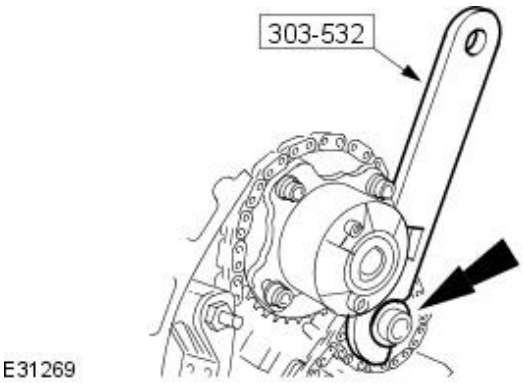


**26.** CAUTIONS:

While applying the opposing force to sprocket and chain, tighten the sprocket bolt.

Make sure that a new bolt is installed.

Using the special tool apply force to the tool in an anti-clockwise direction.

- Tighten to 20 Nm + 90 deg.

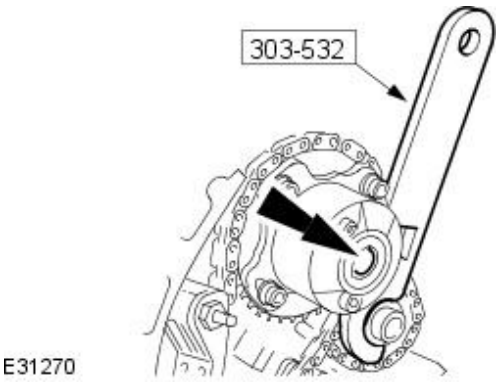


GETtheMANUALS.org

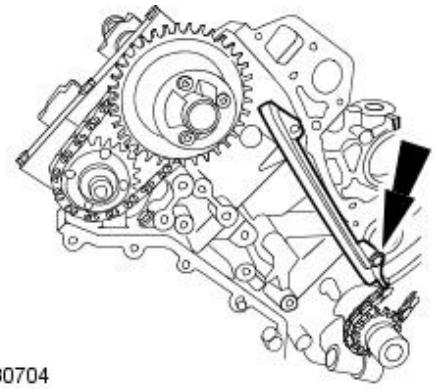

E30704

**27.** Install the primary timing chain guide.

- Tighten to 12 Nm.

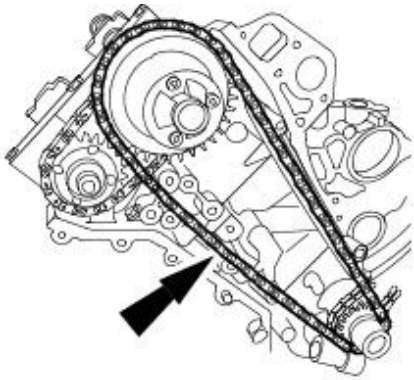

E30703

**28.** CAUTION: Make sure the timing chain slack is on the tensioned side of the timing chain.

Install the primary timing chain.

- Install the primary chain over the crankshaft sprocket and the intake sprocket.

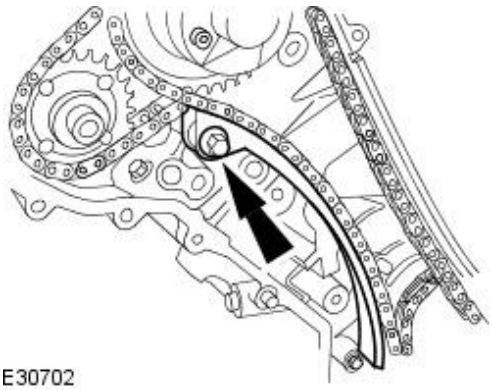

E30702

**29.** Install the primary timing chain tensioner guide.

- Tighten to 12 Nm.

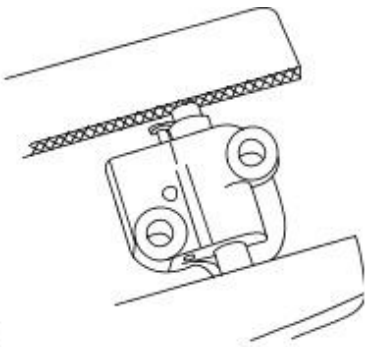

GA3138-B

**30.** CAUTION: Use suitable protective covers on the vice jaws to protect the timing chain tensioner.

Secure the right-hand timing chain tensioner in the vice jaws.

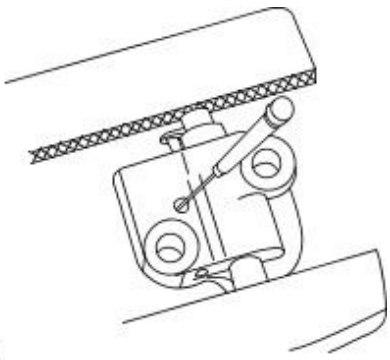

GA3139-B

**31.** CAUTION: During timing chain tensioner compression, do not release the ratchet stem until the timing chain tensioner piston is fully bottomed in its bore or damage to the ratchet stem will result.

Using a suitable tool, hold the right-hand timing chain tensioner ratchet lock mechanism away from the ratchet stem.

**32.** NOTE: The timing chain tensioner piston should retract with minimal force. If binding occurs, reposition the timing chain tensioner to eliminate side loading.

GETtheMANUALS.org

Slowly compress the right-hand timing chain tensioner.

**33.** NOTE: The retaining tool must remain in the timing chain tensioner until the timing chain tensioner is installed to the engine with the piston bottomed in the bore.

Using a suitable tool, retain the right-hand timing chain tensioner piston.

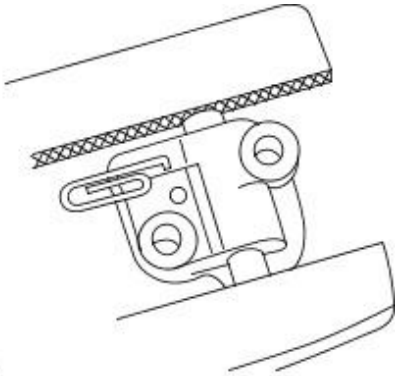

GA3140-A

**34.** Install the primary timing chain tensioner assembly.

- Tighten to 12 Nm.

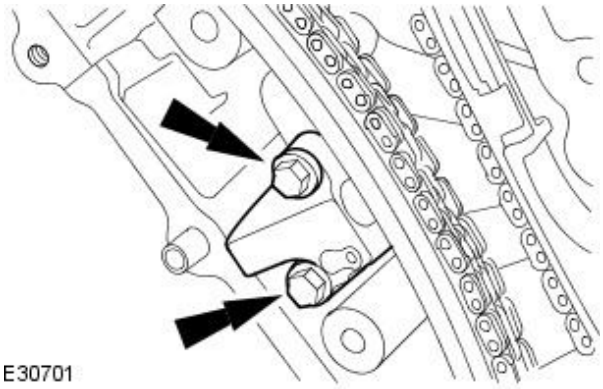

E30701

**35.** Release the tension in the right-hand timing chain tensioner.

- Remove the retaining tool.

**36.** CAUTIONS:

While applying the opposing force to sprocket and chain, tighten the sprocket bolt.

Make sure that a new bolt is installed.

Using the special tool apply force to the tool in an anti-clockwise direction to tension the primary timing chain on its drive side.

- Tighten to 20 Nm + 90 deg.

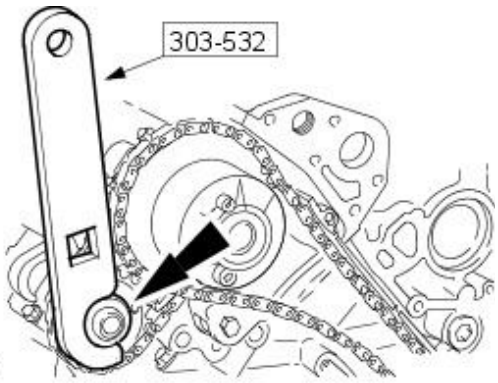


E31271

**37.** CAUTIONS:

While applying the opposing force to sprocket and chain, tighten the sprocket bolt.

Make sure that a new bolt is installed.

Using the special tool apply force to the tool in an anti-clockwise direction.

- Tighten to 20 Nm + 90 deg.

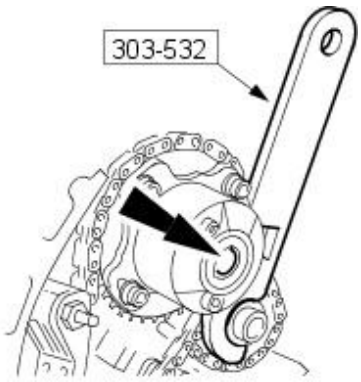


E31270

GETtheMANUALS.org

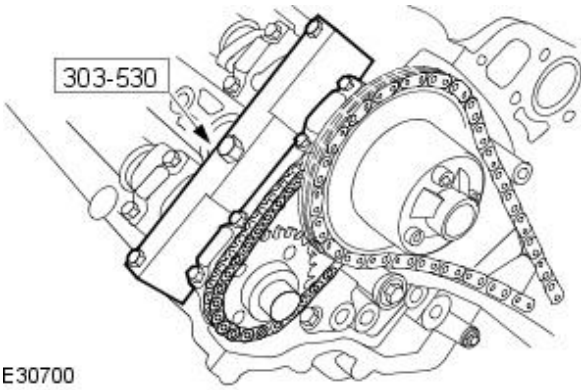


**38.** Remove the special tool to the Right-hand cylinder head.

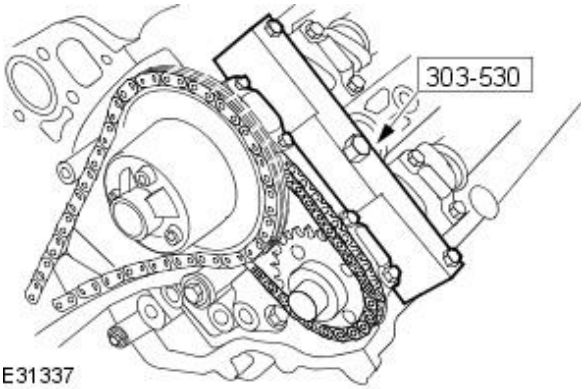


**39.** Remove the special tool to the left-hand cylinder head.

Vehicles without supercharger

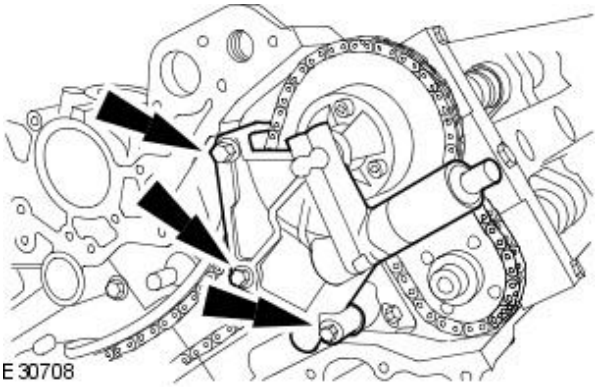


**40.** Install the left-hand variable camshaft timing oil control unit housing.

- Install new O-ring seals.
- Tighten to 22 Nm.

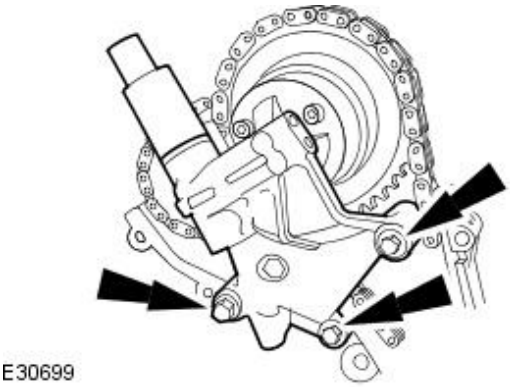


**41.** Install the right-hand variable camshaft timing oil control unit housing.

- Install new O-ring seals.
- Tighten to 22 Nm.

All vehicles

GETtheMANUALS.org

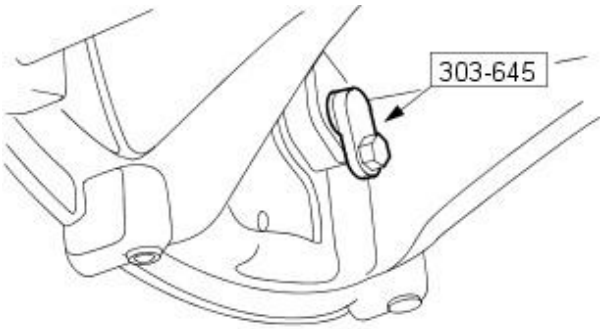


VUJ0002400

**42.** Remove the special tool.

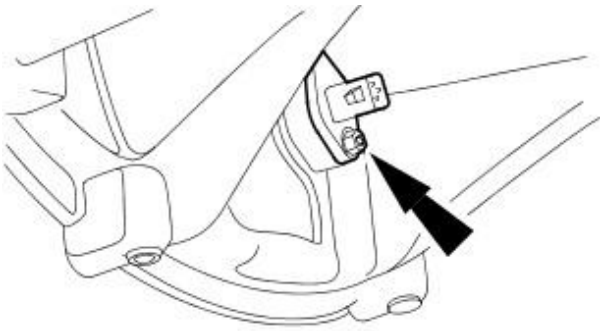

E30694

**43.** Install the crankshaft position sensor.

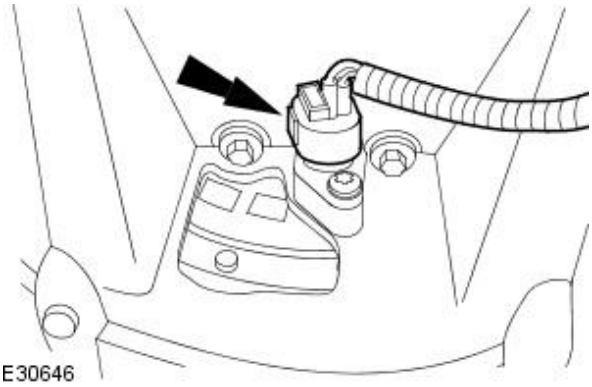

E30646

**44.** Connect the crankshaft position sensor electrical connector.

**45.** Install the air deflector.
For additional information, refer to: Air Deflector (501-02 Front End Body Panels, Removal and Installation).

**46.** Install the engine front cover.
For additional information, refer to: Engine Front Cover - VIN Range: N52048->N99999 (303-01B Engine - V8 4.2L Petrol/V8 S/C 4.2L Petrol, In-vehicle Repair).

**47.** Carry out the valve clearance check.
For additional information, refer to: Valve Clearance Check (303-01B Engine - V8 4.2L Petrol/V8 S/C 4.2L Petrol, General Procedures).

GETtheMANUALS.org

# Engine - V8 4.2L Petrol/V8 S/C 4.2L Petrol - Cylinder Head LHVIN Range: N52048->N99999

In-vehicle Repair

| Special Tool(s) | |
|---|---|
| 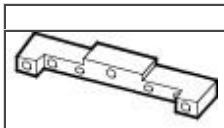 303-530 | Camshaft setting<br><br>303-530 |
| DWST021 | Timing chain tensioning tool<br><br>303-532 |
| 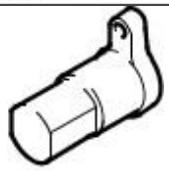 DWST032 | Crankshaft setting, main tool<br><br>303-645 |

## Removal

All vehicles

CAUTION: If a replacement cylinder head is to be installed to a vehicle with variable camshaft timing (VCT) the cylinder head must have the oil gallery blind rivet removed before installation.

1. Remove the air deflector.
   For additional information, refer to: Air Deflector (501-02 Front End Body Panels, Removal and Installation).
2. Disconnect the crankshaft position (CKP) sensor electrical connector.

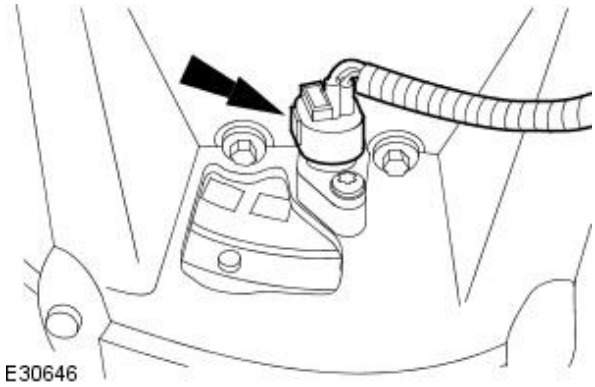

E30646

3. Remove the CKP sensor.

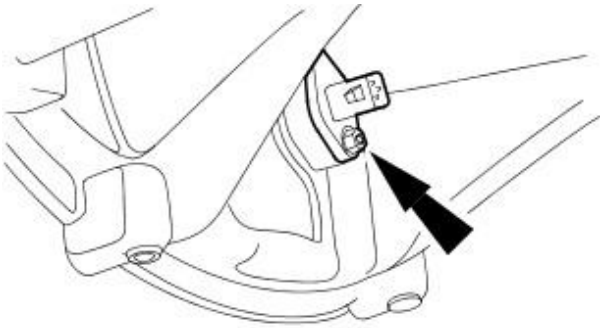

E30694

GETtheMANUALS.org

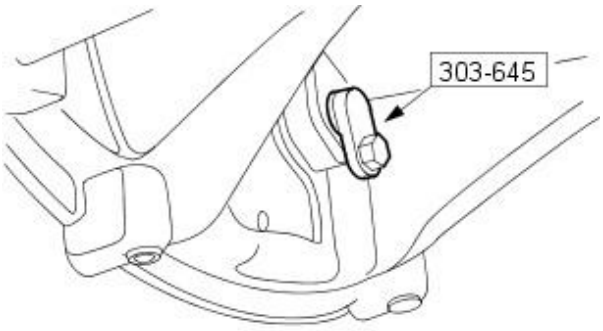


VUJ0002400

**4.** Install the special tool.

Vehicles without supercharger

**5.** Remove the intake manifold.
For additional information, refer to: Intake Manifold - VIN Range: N52048->N99999 (303-01B Engine - V8 4.2L Petrol/V8 S/C 4.2L Petrol, In-vehicle Repair).

Vehicles with supercharger

**6.** Remove the charge air cooler.
For additional information, refer to: Charge Air Cooler (303-12B Intake Air Distribution and Filtering - V8 4.2L Petrol/V8 S/C 4.2L Petrol, Removal and Installation).

**7.** NOTE: Left-hand shown, right-hand similar.

Remove the lower intake manifold.

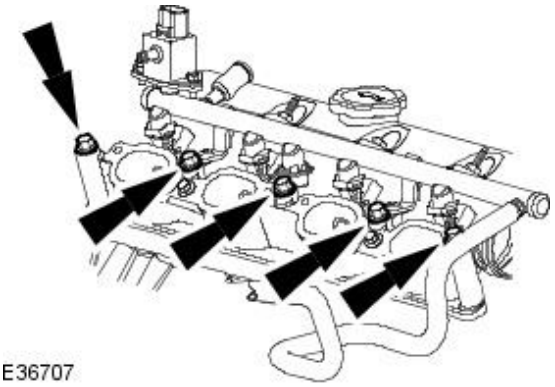

E36707

All vehicles

**8.** Remove the engine front cover.
For additional information, refer to: Engine Front Cover - VIN Range: N52048->N99999 (303-01B Engine - V8 4.2L Petrol/V8 S/C 4.2L Petrol, In-vehicle Repair).

**9.** Remove the right-hand variable camshaft timing oil control unit housing.

- Remove and discard the O-ring seals.

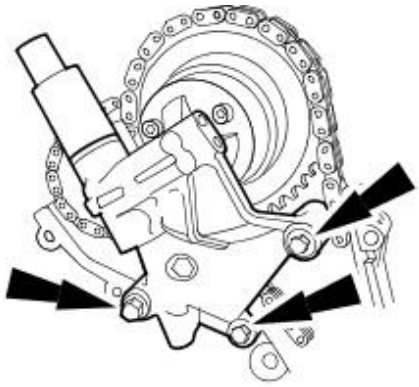

E30699

**10.** Remove the left-hand variable camshaft timing oil control unit housing.

- Remove and discard the O-ring seals.

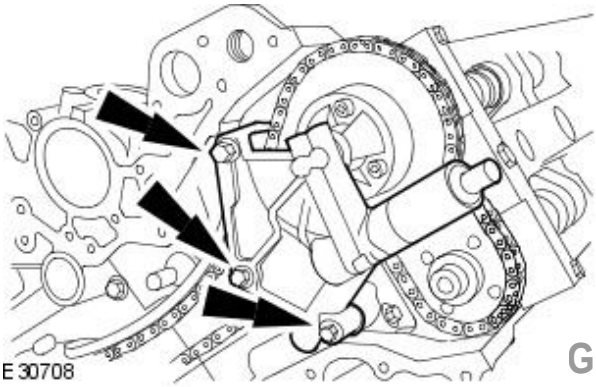

E30708

GETtheMANUALS.org

**11.** Install the special tool to the left-hand cylinder head.

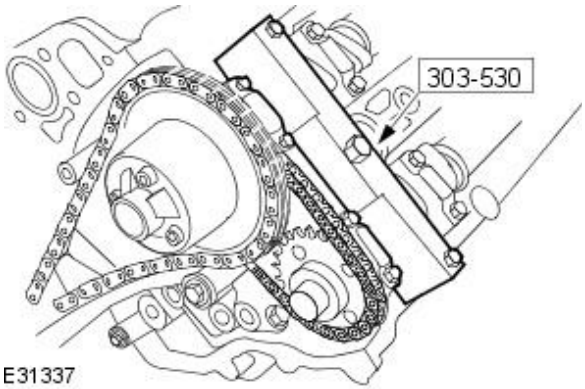


E31337

**12.** Install the special tool to the right-hand cylinder head.

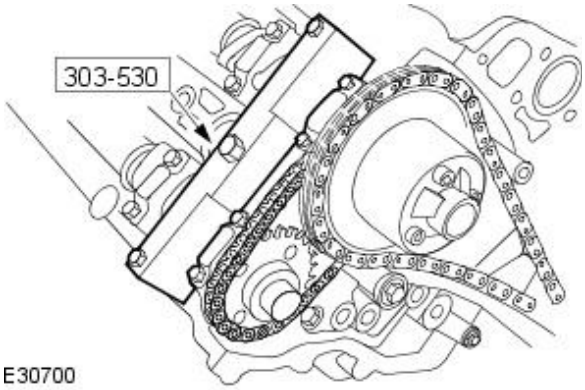


E30700

**13.** Remove the primary timing chain tensioner assembly.

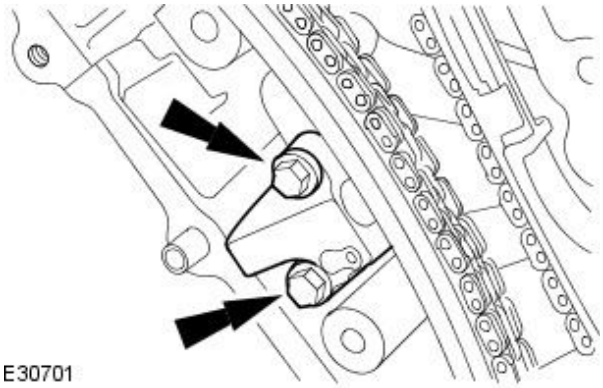

E30701

**14.** Remove the primary timing chain tensioner guide.

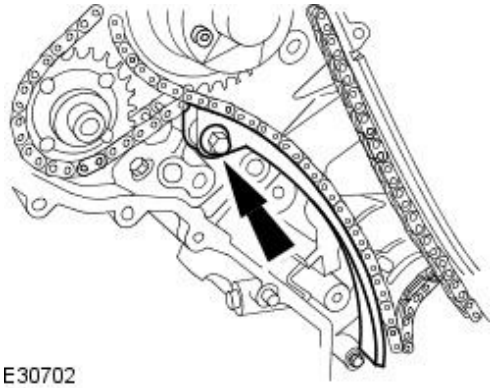

E30702

**15.** Remove the primary timing chain.

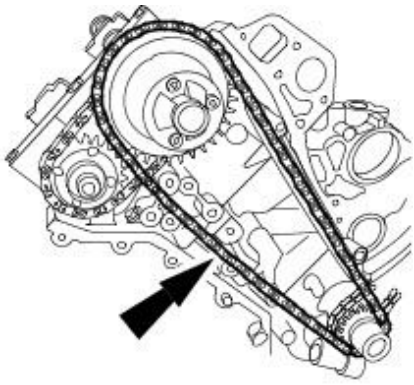

E30703

GETtheMANUALS.org

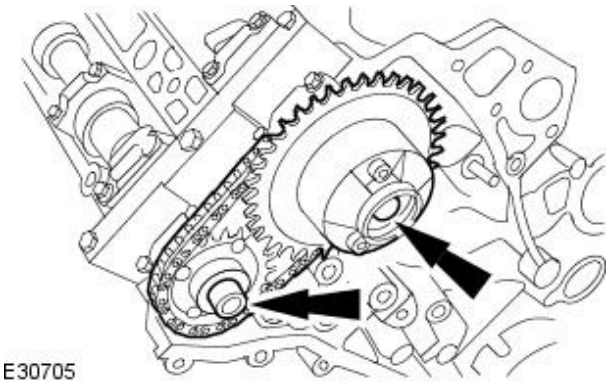


**16.** CAUTION: Make sure the secondary timing chain and camshaft sprockets are free to rotate.

Loosen the camshaft sprockets.

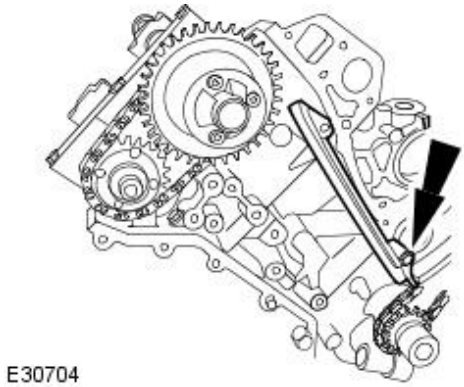


**17.** Remove the primary timing chain guide.

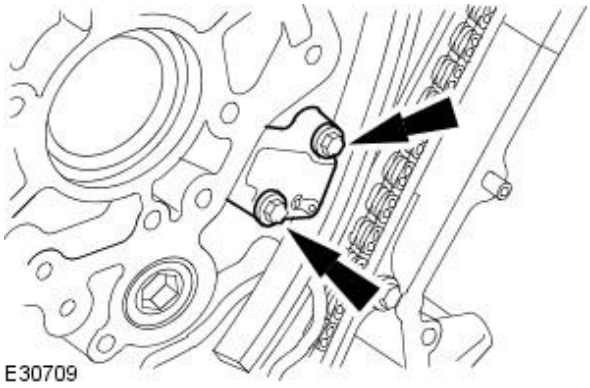


**18.** Remove the primary timing chain tensioner assembly.

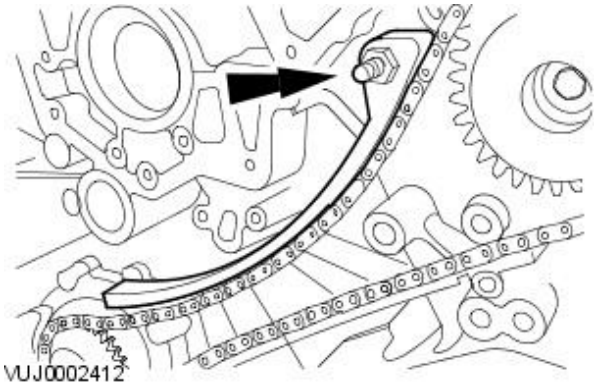


**19.** Remove the primary timing chain tensioner guide.

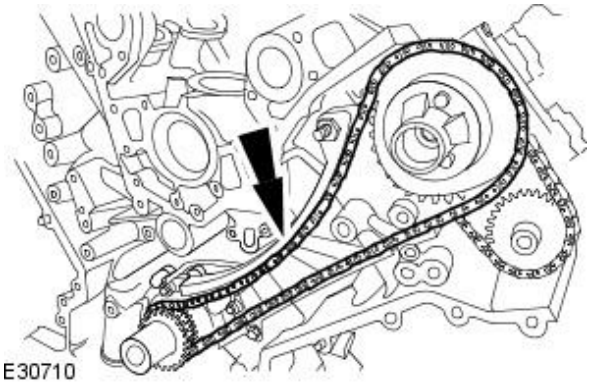


**20.** Remove the primary timing chain.

GETtheMANUALS.org

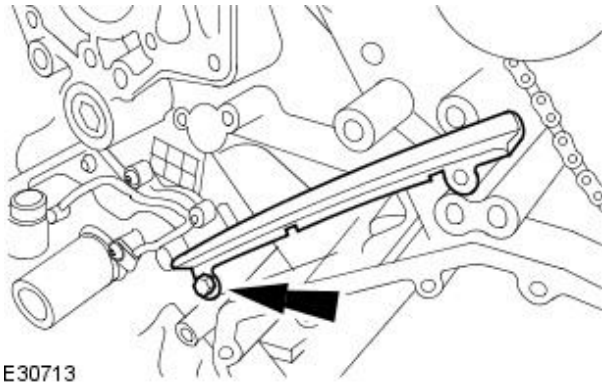


**21.** Remove the primary timing chain tensioner guide.

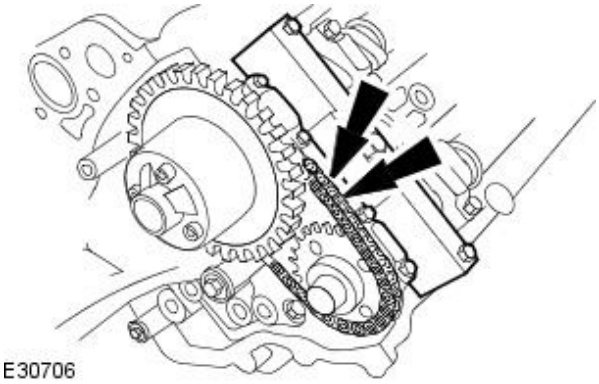


**22.** Remove the secondary timing chain tensioner retaining bolts.

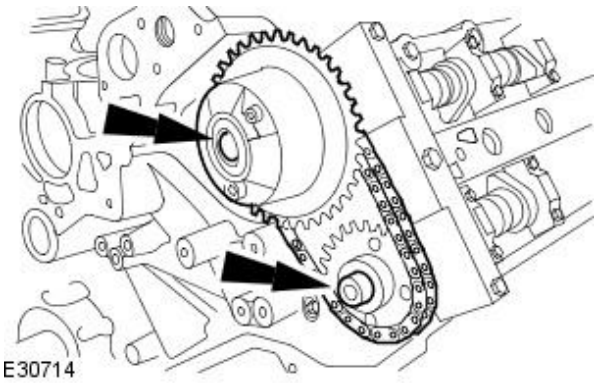


**23.** Remove the camshaft sprockets.

- Remove the secondary timing chain tensioner and secondary timing chain from the camshaft sprockets.

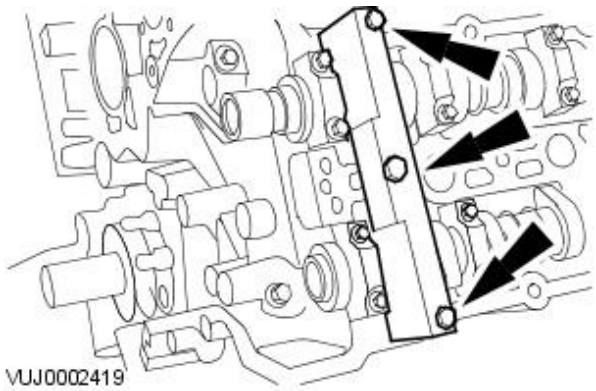


**24.** Remove the camshaft setting tool.

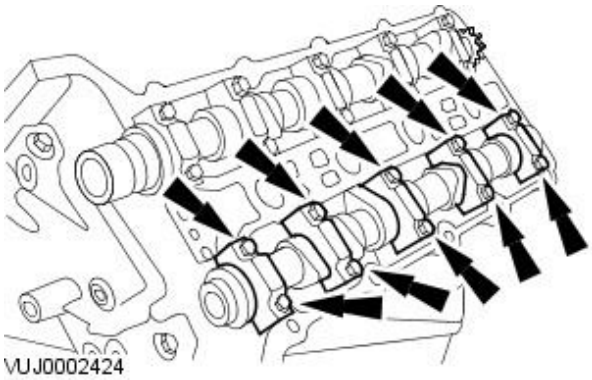


**25.** Remove the camshaft bearing caps.

- Remove the camshaft bearing cap retaining bolts evenly and in stages.
- Remove the camshaft bearing caps. Note their orientation and markings, each is marked with its position (a number) and orientation (an arrow).

GETtheMANUALS.org

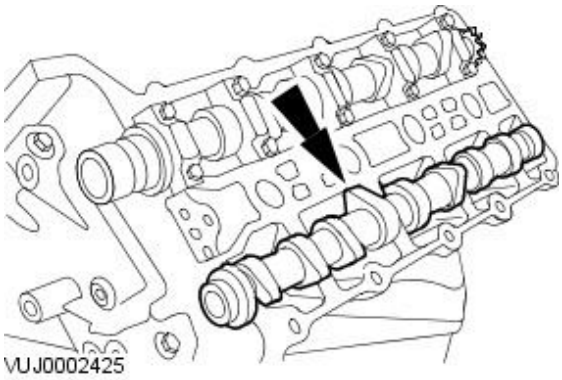


**26.** Remove the left-hand exhaust camshaft.

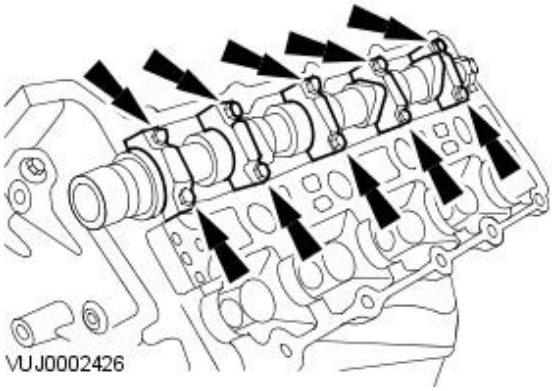


**27.** Remove the camshaft bearing caps.

- Remove the camshaft bearing cap retaining bolts evenly and in stages.
- Remove the camshaft bearing caps. Note their orientation and markings, each is marked with its position (a number) and orientation (an arrow).

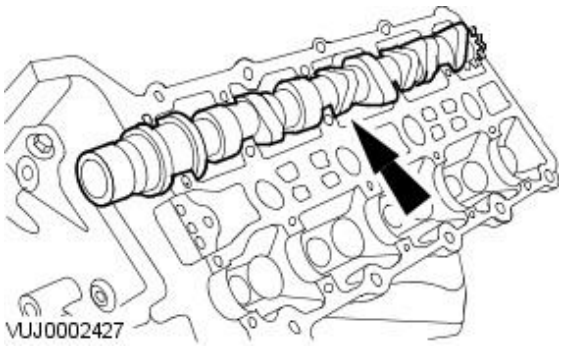


**28.** Remove the left-hand inlet camshaft.

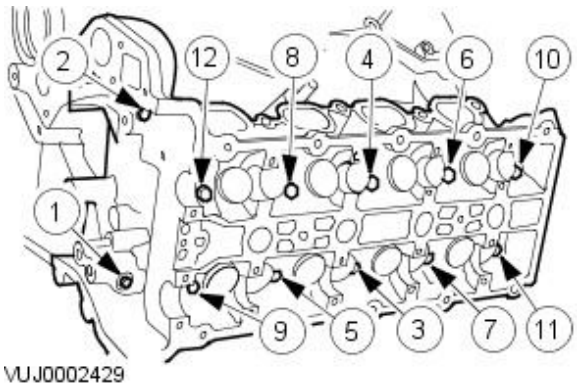


**29.** CAUTIONS:

The bolts can only be used twice, mark the bolts with a center punch. If two punch marks are visible, discard the bolts.

Vehicles fitted with Polydrive cylinder head bolts, the cylinder head bolts must be removed using a 10 mm Polydrive socket or a 10 mm Allen key. Failure to follow this instruction may result in damage to the component.

Remove the left-hand cylinder head.

- Remove the bolts in the indicated sequence.

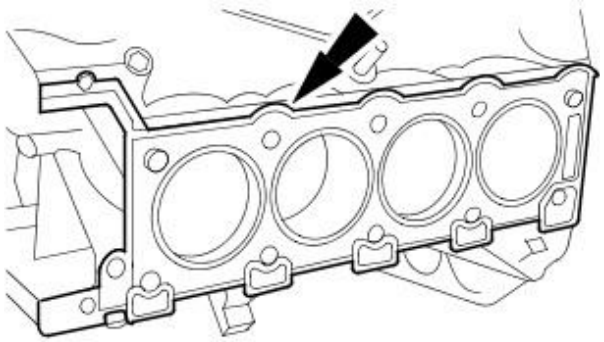


**30.** CAUTION: Only use a plastic scrapper to clean off old gasket.

Remove the cylinder head gasket.

- Clean the gasket mating faces.

GETtheMANUALS.org

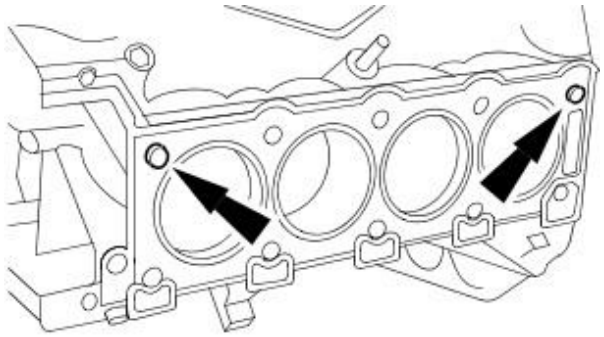

E31267

**31.** CAUTION: Only use a plastic scrapper to clean off old gasket.

Clean the cylinder head locating dowels.

**32.** Clean and inspect the cylinder head and cylinder block.
For additional information, refer to: Cylinder Head Distortion (303-00 Engine System - General Information, General Procedures).

## Installation

All vehicles

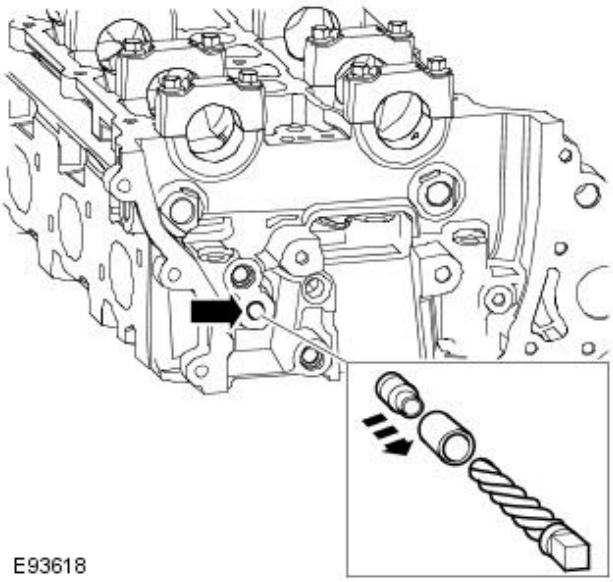

E93618

**1.** CAUTIONS:

If a replacement cylinder head is to be installed to a vehicle with VCT the cylinder head must have the oil gallery blind rivet removed before installation.

Make sure that all debris is removed from the cylinder head and cylinder head oil gallery.

Vehicles fitted with VCT: Remove the blind rivet from the VCT oil gallary.

- NOTE: The centre bore of the blind rivet is 6 mm (0.24 inch) diameter.

- Identify the VCT oil supply gallery and the 8 mm (0.31 inch) blind rivet.
- Using a suitable 3 mm (0.12 inch) punch release the centre of the blind rivet until it is released from the outer part of the blind rivet.
- Using a suitable extraction tool, remove the remaining part of the blind rivet.

**2.** Clean the component mating faces.

**3.** Check cylinder head face for distortion, across the center and from corner to corner.

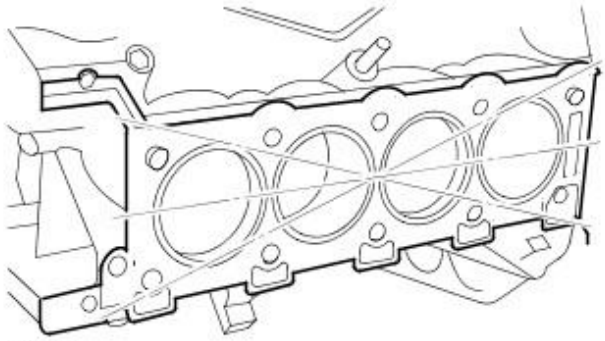

E46855

**4.** For cylinder head face distortion data, refer to specifications.
For additional information, refer to: Specifications (303-01B Engine - V8 4.2L Petrol/V8 S/C 4.2L Petrol, Specifications).

GETtheMANUALS.org

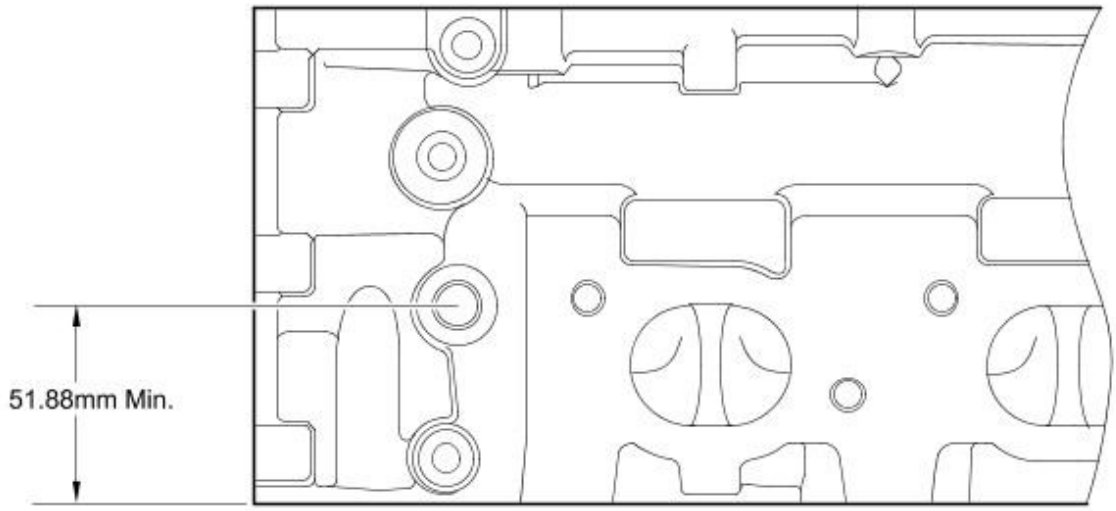

E100333

**5.** NOTE: For cylinder head with distortion above the maximum allowance, the cylinder head material must be measured.

Measure the cylinder head material.

- Check measurement from the centre of the exhaust dowel to the cylinder head face as shown.
- If the measurement is less than 51.88 mm the cylinder head requires replacement.

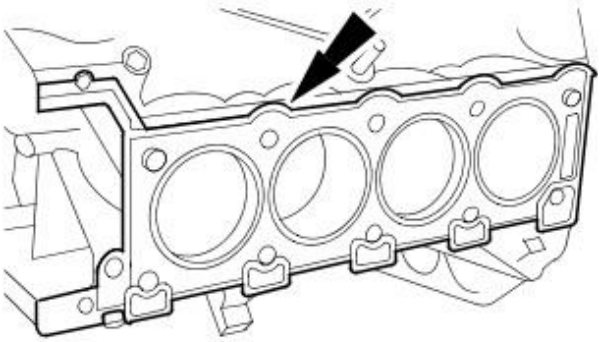
E36711

**6.** CAUTION: The head gasket must be installed over the cylinder block dowels.

Install a new cylinder head gasket

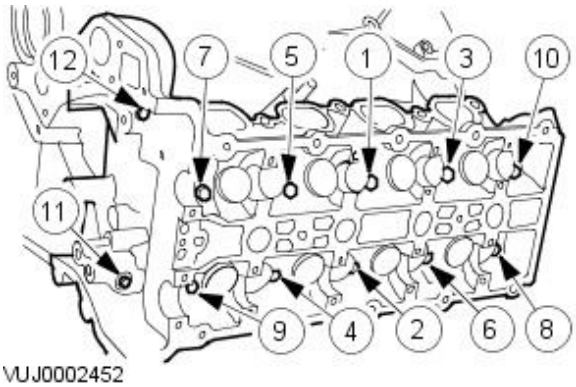

VUJ0002452

**7.** NOTE: Tighten the bolts 1 to 10 in the sequence shown.

Install the left-hand cylinder head.

1. Tighten bolts 1 to 10 to 20 Nm.
2. Tighten bolts 1 to 10 to 35 Nm.
3. Tighten bolts 1 to 10 to 90°.
4. Tighten bolts 1 to 10 to 90°.
5. Tighten bolts 11 to 12 to 25 Nm.

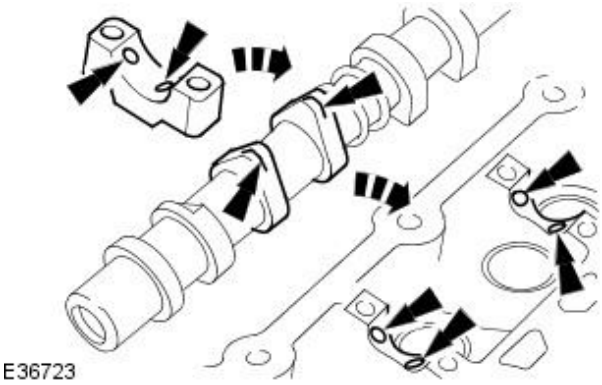
E36723

**8.** NOTE: Make sure all components are clean.

Apply oil (EP-90) to the camshaft and bearing surfaces, as follows:

- To the upper face of each bearing surface in the cylinder head.
- To the upper face of each bearing surface in each bearing cap.
- On the cam lobes ONLY, not on the base circle area.

GETtheMANUALS.org

**9.** Install the left-hand inlet camshaft.

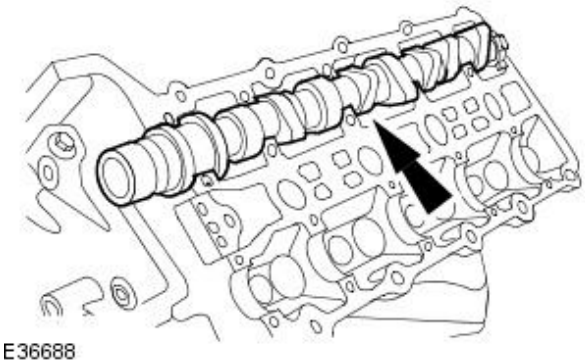


**10.** CAUTION: Alternate bolt tightening to correctly seat the camshaft bearing caps.

Install the camshaft bearing cap bolts evenly.

- Tighten to 10 Nm.

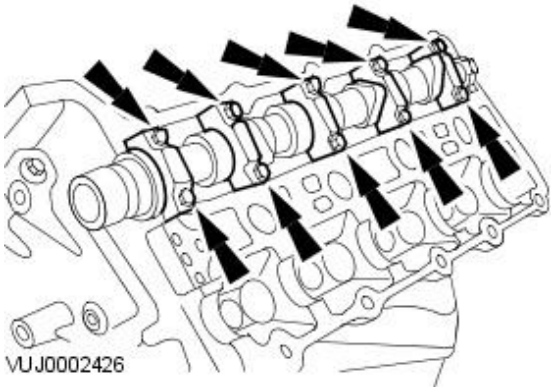


**11.** Install the left-hand exhaust camshaft.

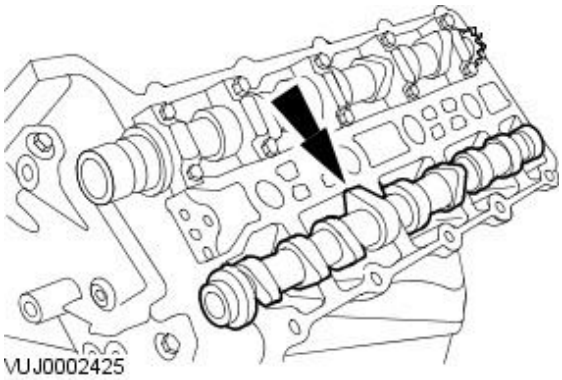


**12.** CAUTION: Alternate bolt tightening to correctly seat the camshaft bearing caps.

Install the camshaft bearing cap bolts evenly.

- Tighten to 10 Nm.

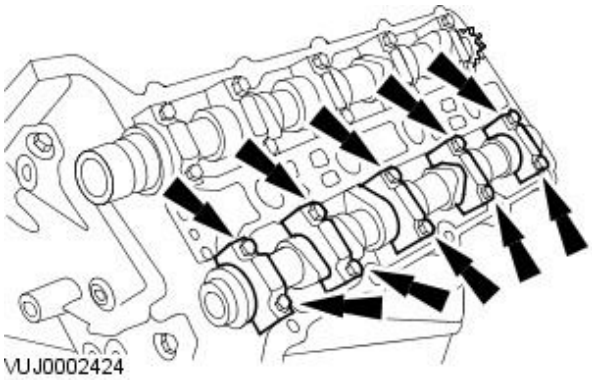


**13.** Install the camshaft setting tool.

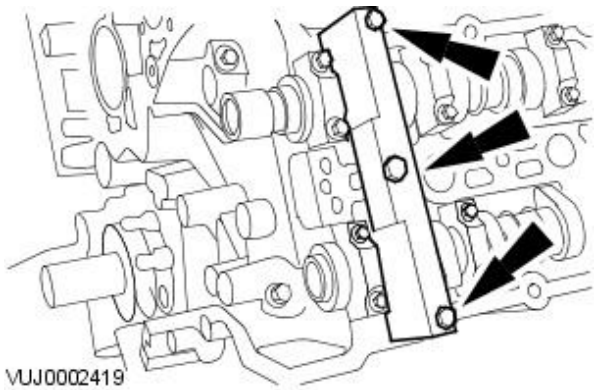


GETtheMANUALS.org

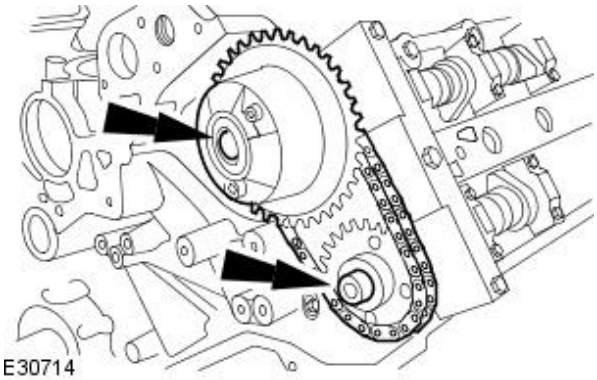


**14.** CAUTIONS:

Do not tighten the camshaft sprocket retaining bolts.

Make sure the secondary timing chain and camshaft sprockets are free to rotate.

Install the camshaft sprockets.

- Install the secondary timing chain tensioner and secondary timing chain to the camshaft sprockets.

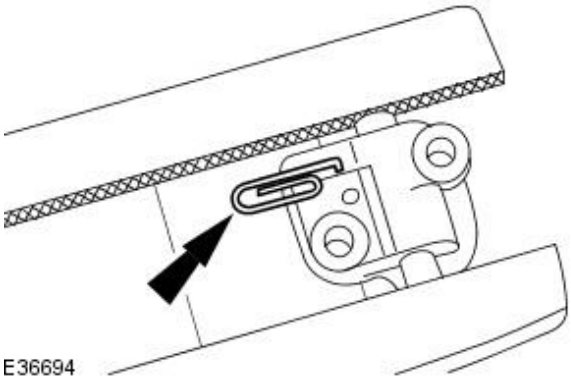


**15.** Using a suitable tool, retain the left-hand timing chain tensioner piston.

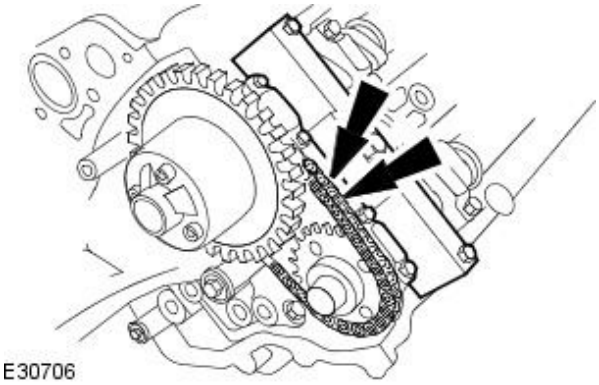


**16.** Install the secondary timing chain tensioner retaining bolts.

- Tighten to 12 Nm.

**17.** Release the tension in the left-hand timing chain tensioner.

- Remove the retaining tool.

**18.** Install the timing chain tensioning tool 303-532 to the exhaust camshaft sprocket.

- Reposition the camshaft sprockets for the most advantageous position for use of the tool.

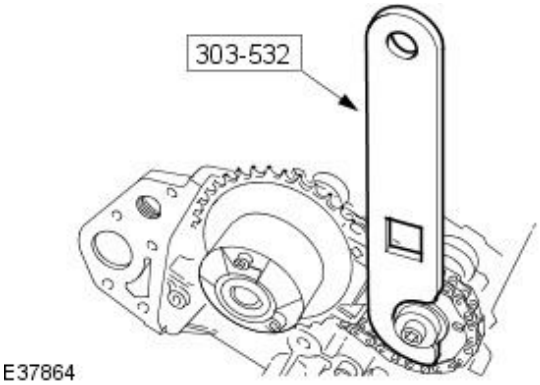


GETtheMANUALS.org

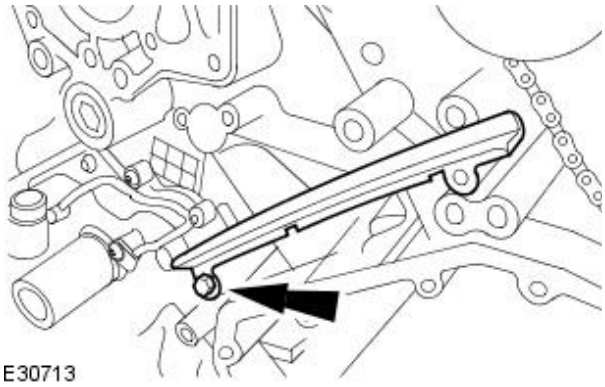


**19.** Install the primary timing chain tensioner guide.

- Tighten to 12 Nm.

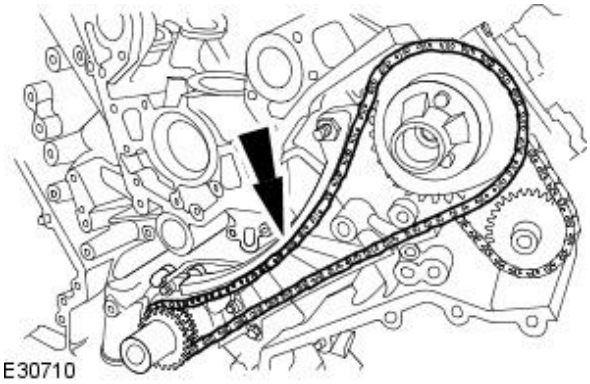


**20.** CAUTION: Make sure the timing chain slack is on the tensioned side of the timing chain.

Install the primary timing chain.

- Install the primary chain over the crankshaft sprocket and the intake sprocket.

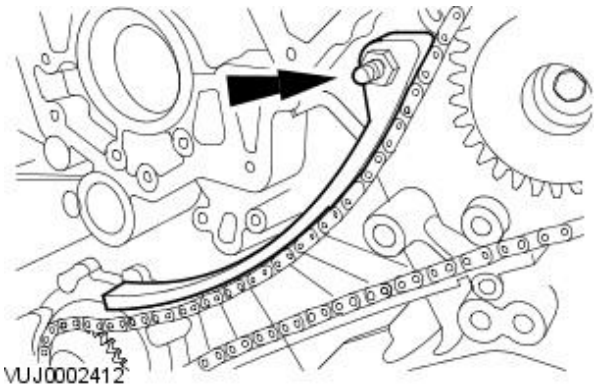


**21.** Install the primary timing chain tensioner guide.

- Tighten to 12 Nm.

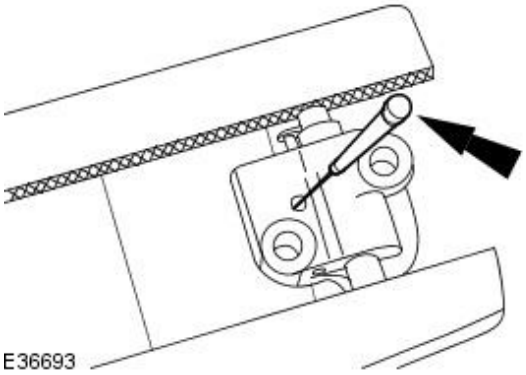


**22.** CAUTION: During timing chain tensioner compression, do not release the ratchet stem until the timing chain tensioner piston is fully bottomed in its bore or damage to the ratchet stem will result.

Using a suitable tool, hold the left-hand timing chain tensioner ratchet lock mechanism away from the ratchet stem.

**23.** NOTE: The timing chain tensioner piston should retract with minimal force. If binding occurs, reposition the timing chain tensioner to eliminate side loading.

Slowly compress the left-hand timing chain tensioner.

GETtheMANUALS.org

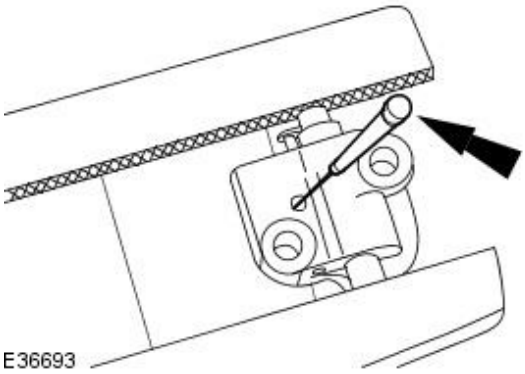


**24.** NOTE: The retaining tool must remain in the timing chain tensioner until the timing chain tensioner is installed to the engine with the piston bottomed in the bore.

Using a suitable tool, retain the left-hand timing chain tensioner piston.

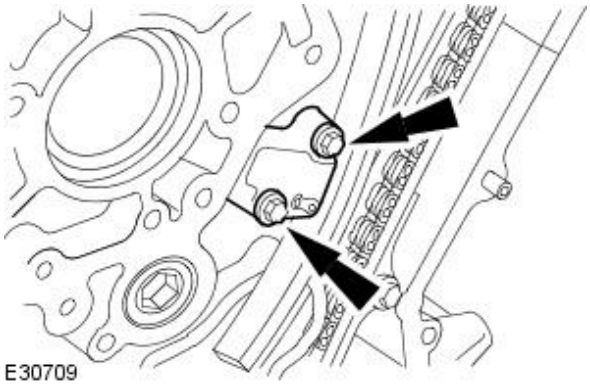


**25.** Install the primary timing chain tensioner assembly.

- Tighten to 12 Nm.

**26.** Release the tension in the left-hand timing chain tensioner.

- Remove the retaining tool.

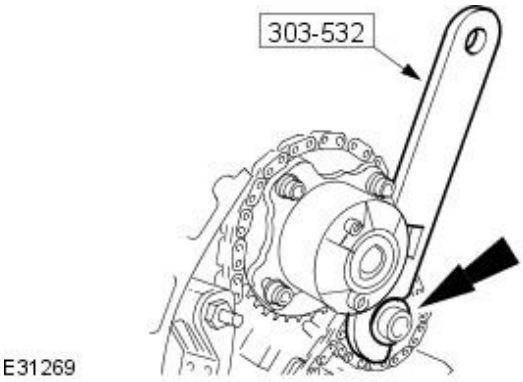


**27.** CAUTIONS:

While applying the opposing force to sprocket and chain, tighten the sprocket bolt.

Make sure that a new bolt is installed.

Using the special tool, apply force to the tool in an anti-clockwise direction to tension the primary timing chain on its drive side.

- Tighten to 20 Nm + 90 deg.

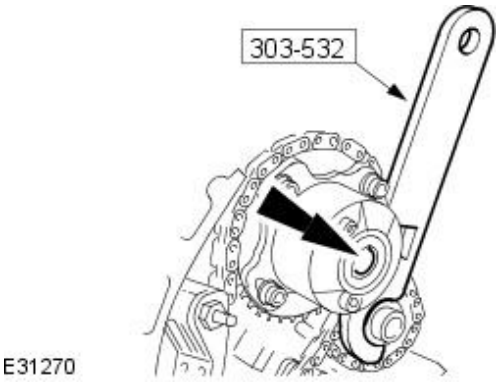


**28.** CAUTIONS:

While applying the opposing force to sprocket and chain, tighten the sprocket bolt.

Make sure that a new bolt is installed.

Using the special tool, apply force to the tool in an anti-clockwise direction.

- Tighten to 20 Nm + 90 deg.

GETtheMANUALS.org

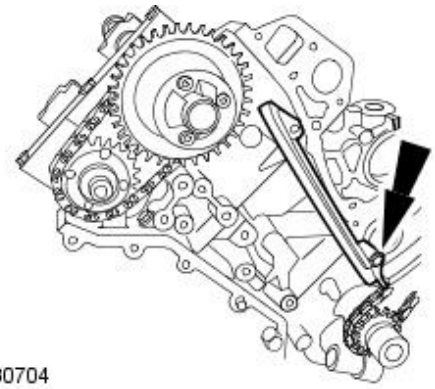

E30704

**29.** Install the primary timing chain guide.

- Tighten to 12 Nm.

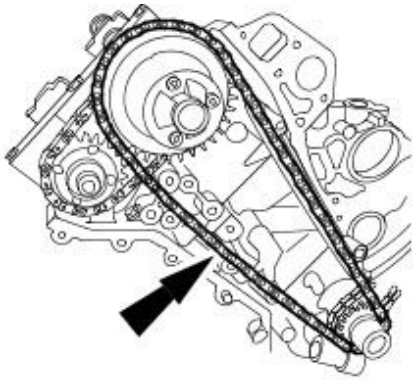

E30703

**30.** CAUTION: Make sure the timing chain slack is on the tensioned side of the timing chain.

Install the primary timing chain.

- Install the primary chain over the crankshaft sprocket and the intake sprocket.

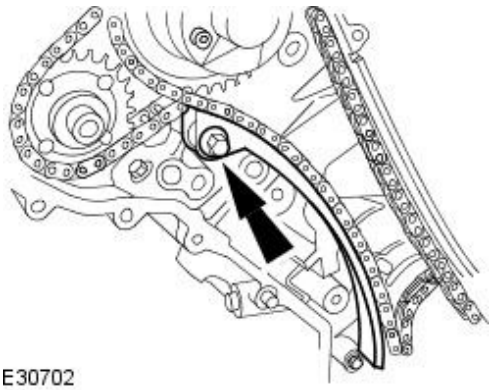

E30702

**31.** Install the primary timing chain tensioner guide.

- Tighten to 12 Nm.

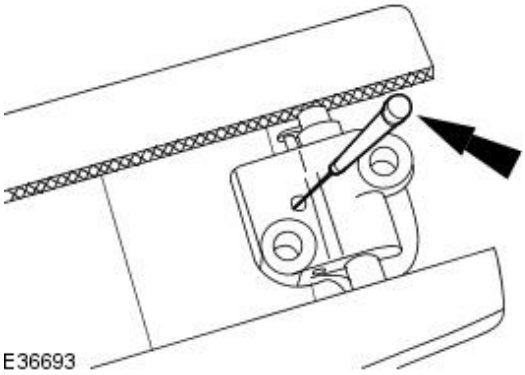

E36693

**32.** CAUTION: During timing chain tensioner compression, do not release the ratchet stem until the timing chain tensioner piston is fully bottomed in its bore or damage to the ratchet stem will result.

Using a suitable tool, hold the right-hand timing chain tensioner ratchet lock mechanism away from the ratchet stem.

**33.** NOTE: The timing chain tensioner piston should retract with minimal force. If binding occurs, reposition the timing chain tensioner to eliminate side loading.

Slowly compress the right-hand timing chain tensioner.

GETtheMANUALS.org

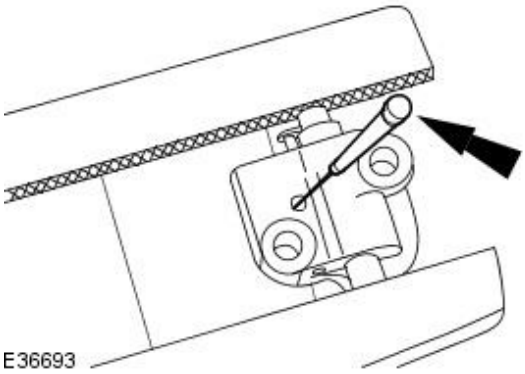


**34.** NOTE: The retaining tool must remain in the timing chain tensioner until the timing chain tensioner is installed to the engine with the piston bottomed in the bore.

Using a suitable tool, retain the right-hand timing chain tensioner piston.

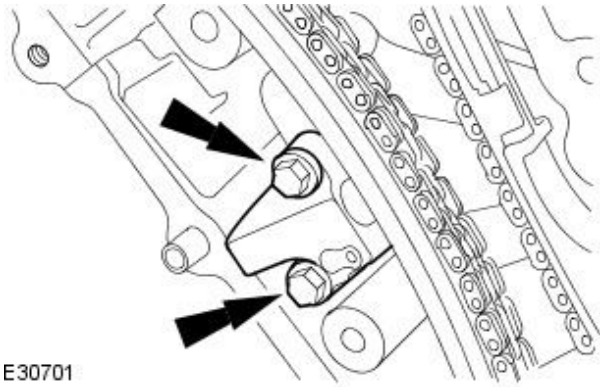


**35.** Install the primary timing chain tensioner assembly.

- Tighten to 12 Nm.

**36.** Release the tension in the right-hand timing chain tensioner.

- Remove the retaining tool.

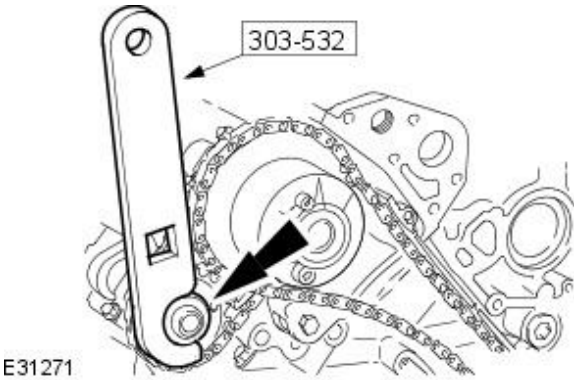


**37.** CAUTIONS:

While applying the opposing force to sprocket and chain, tighten the sprocket bolt.

Make sure that a new bolt is installed.

Using the special tool apply force to the tool in an anti-clockwise direction to tension the primary timing chain on its drive side.

- Tighten to 20 Nm + 90 deg.

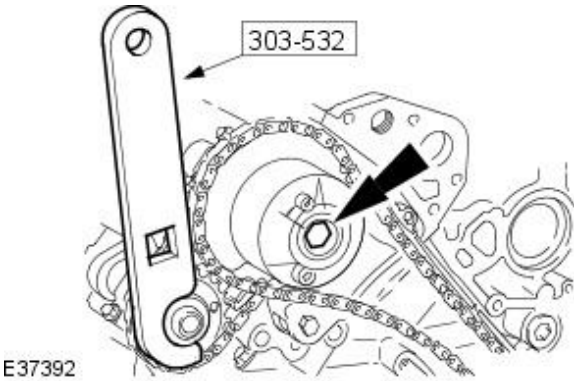


**38.** CAUTIONS:

While applying the opposing force to sprocket and chain, tighten the sprocket bolt.

Make sure that a new bolt is installed.

Using the special tool, apply force to the tool in an anti-clockwise direction.

- Tighten to 20 Nm + 90 deg.

GETtheMANUALS.org

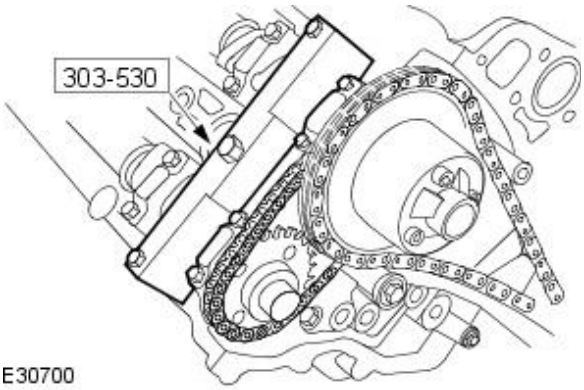

E30700

**39.** Remove the special tool from the right-hand cylinder head.

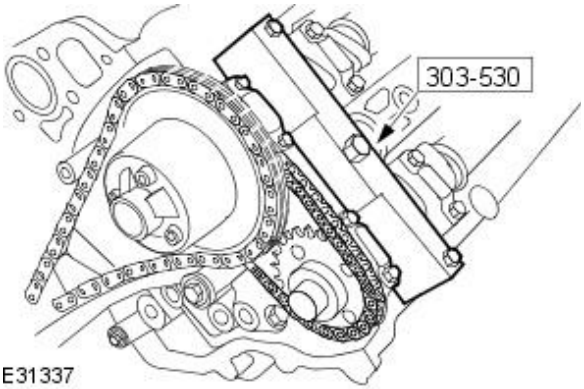

E31337

**40.** Remove the special tool from the left-hand cylinder head.

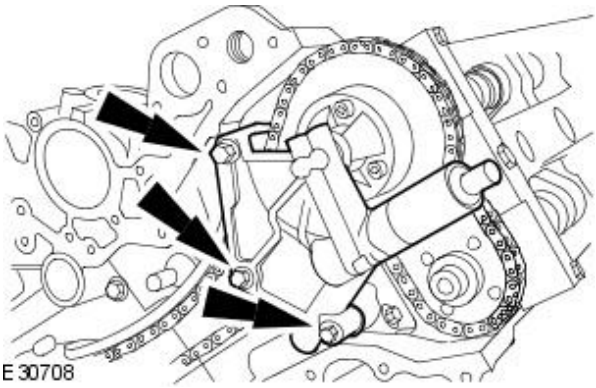
E30708

**41.** Install the left-hand variable camshaft timing oil control unit housing.

- Install new O-ring seals.
- Tighten to 22 Nm.

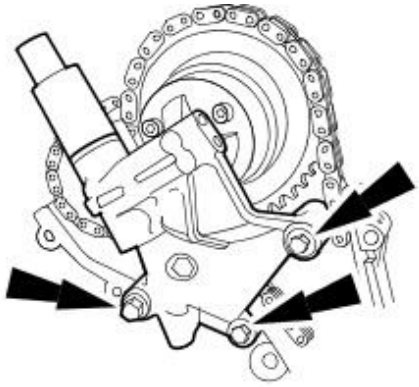
E30699

**42.** Install the right-hand variable camshaft timing oil control unit housing.

- Install new O-ring seals.
- Tighten to 22 Nm.

**43.** Raise the vehicle.

**44.** Remove the special tool.

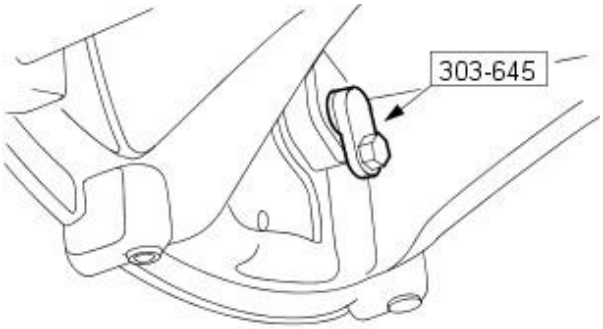

VUJ0002400

GETtheMANUALS.org

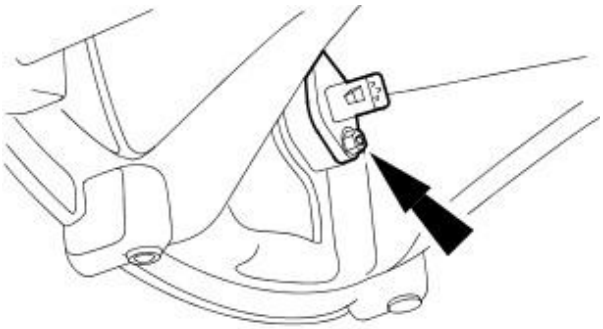

E30694

**45.** Install the CKP sensor.

- Tighten to 10 Nm.

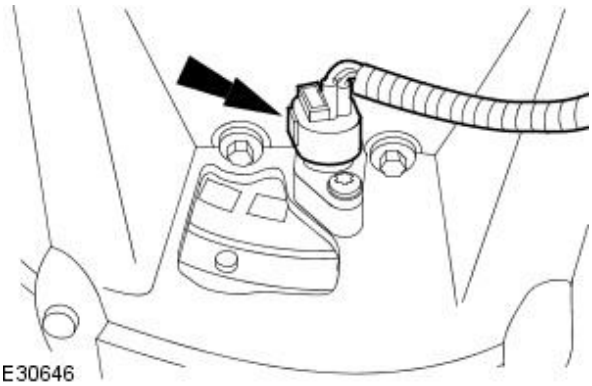

E30646

**46.** Connect the CKP sensor electrical connector.

Vehicles with supercharger

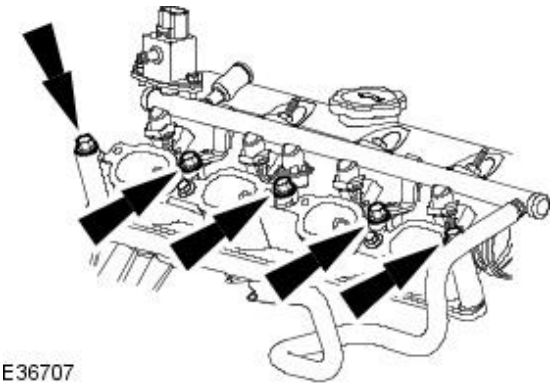

E36707

**47.** Install the lower intake manifold.

- Tighten to 22 Nm.

**48.** Install the charge air cooler.
For additional information, refer to: Charge Air Cooler (303-12B Intake Air Distribution and Filtering - V8 4.2L Petrol/V8 S/C 4.2L Petrol, Removal and Installation).

Vehicles without supercharger

**49.** Install the intake manifold.
For additional information, refer to: Intake Manifold - VIN Range: N52048->N99999 (303-01B Engine - V8 4.2L Petrol/V8 S/C 4.2L Petrol, In-vehicle Repair).

All vehicles

**50.** Carry out the valve clearance check.
For additional information, refer to: Valve Clearance Check (303-01B Engine - V8 4.2L Petrol/V8 S/C 4.2L Petrol, General Procedures).

**51.** Install the engine front cover.
For additional information, refer to: Engine Front Cover - VIN Range: N52048->N99999 (303-01B Engine - V8 4.2L Petrol/V8 S/C 4.2L Petrol, In-vehicle Repair).

GETtheMANUALS.org

# Engine - V8 4.2L Petrol/V8 S/C 4.2L Petrol - Engine Front CoverVIN Range: M45255->N52047

In-vehicle Repair

## Removal

All vehicles

1. Remove the cooling fan motor and shroud. For additional information, refer to Section 303-03A Engine Cooling / 303-03B Supercharger Cooling / 303-03C Engine Cooling.
2. Remove the left-hand valve cover.
   For additional information, refer to Valve Cover LH in this section.
3. Remove the right-hand valve cover.
   For additional information, refer to Valve Cover RH in this section.

Vehicles without supercharger

4. Remove the oil cooler.
   For additional information, refer to Oil Cooler in this section.

Vehicles with supercharger

5. Remove the supercharger drive belt.
   For additional information, refer to Section 303-05 Accessory Drive.

All vehicles

6. Remove power steering pump.
   For additional information, refer to Section 211-02 Power Steering.
7. Remove the air conditioning compressor.
   For additional information, refer to Section 412-03 Air Conditioning.
8. Remove the water pump pulley.

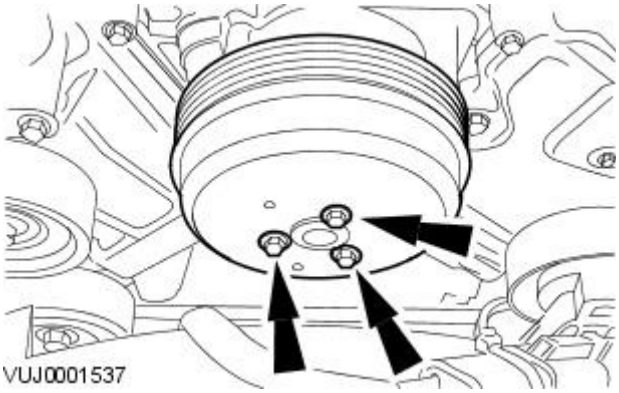


9. Remove the accessory drive belt idler pulley.

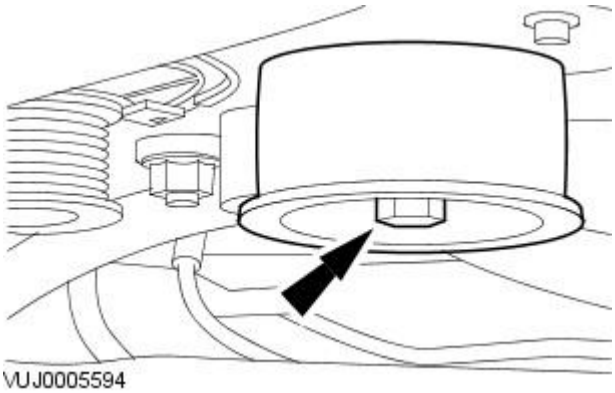


Vehicles with supercharger

10. Remove supercharger drive belt tensioner.
    For additional information, refer to Section 303-05 Accessory Drive.

All vehicles

GETtheMANUALS.org

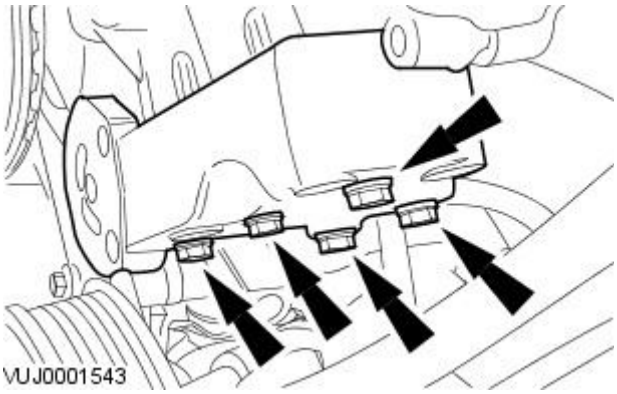


**11.** Remove the power steering pump mounting bracket.

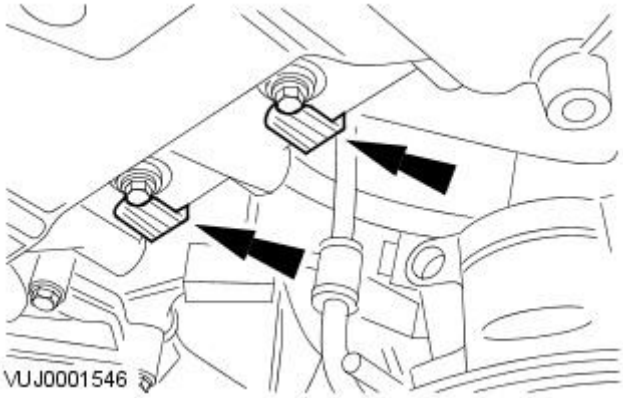


**12.** Detach the engine harness.

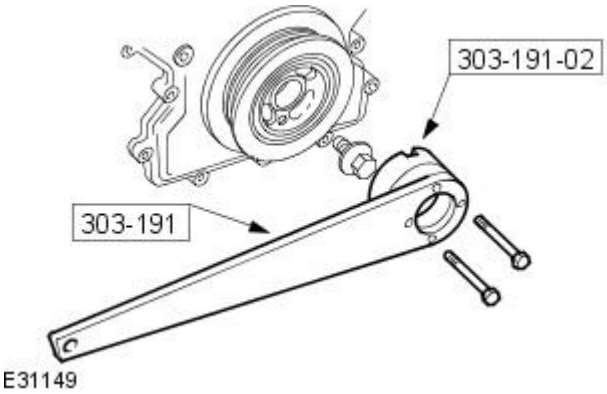


**13.** CAUTION: Under no circumstances should the crankshaft setting peg 303-645 be used in the following operations to lock the crankshaft.

Using special tools, retain the crankshaft pulley.

- Remove and discard the crankshaft pulley bolt.

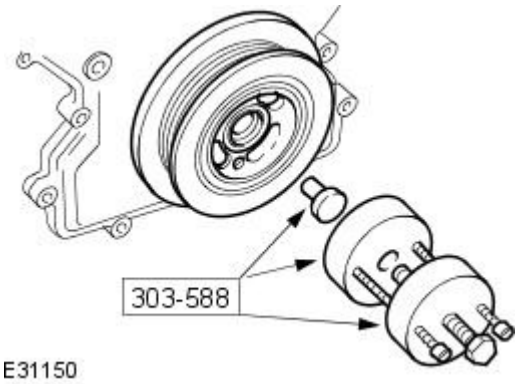


**14.** Remove the special tools.

**15.** Using special tools, remove the crankshaft pulley.

- Collect the locking ring.
- Remove and discard the O-ring seal.

**16.** Remove the special tools.

GETtheMANUALS.org

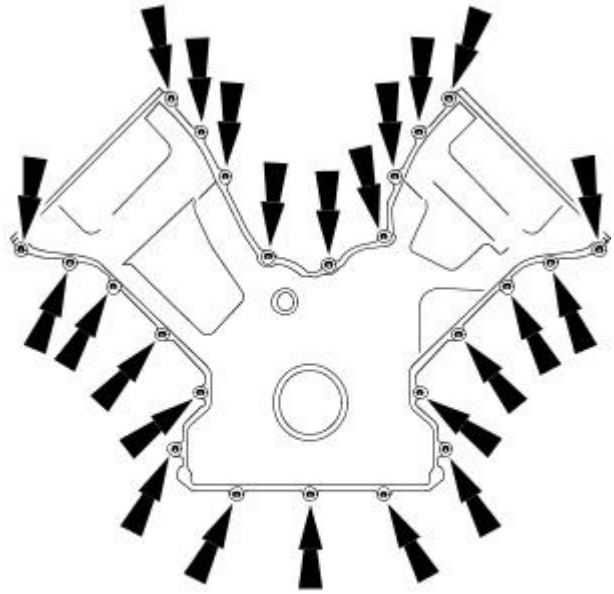

VUJ0002018

**17.** Remove the engine front cover.

- Remove and discard all the seals.

## Installation

All vehicles

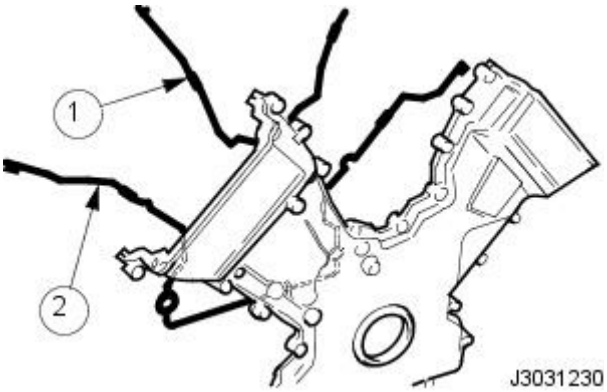


**1.** Install new seals to the timing cover.

1. Install the new seal to the inner groove on the face of the timing cover.
2. Install the new seal to the outer groove on the face of the timing cover.

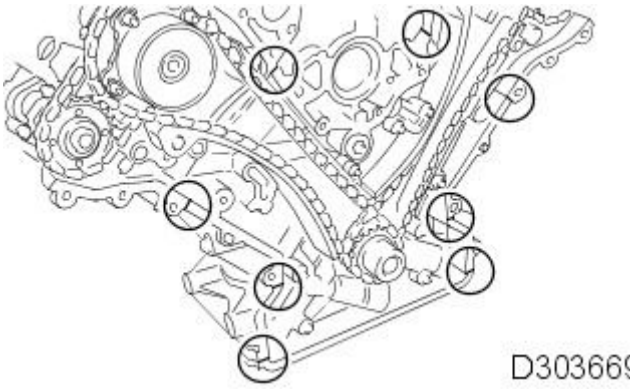


**2.** Apply sealant to the eight joints on the engine face.

- Sealant beads to be 3mm diameter and 12mm long. Cut the nozzle of the sealant tube to produce a 3 mm (0.12 in) bead. (Install and tighten the securing bolts within twenty minutes of sealant application).

GETtheMANUALS.org

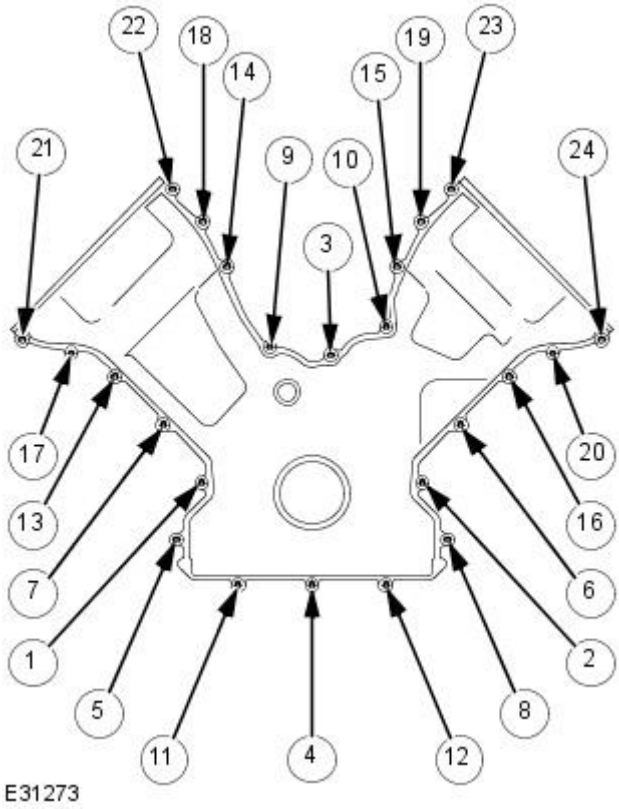


**3.** Install the timing cover.

- Tighten in the sequence shown.
- Tighten to 13 Nm.

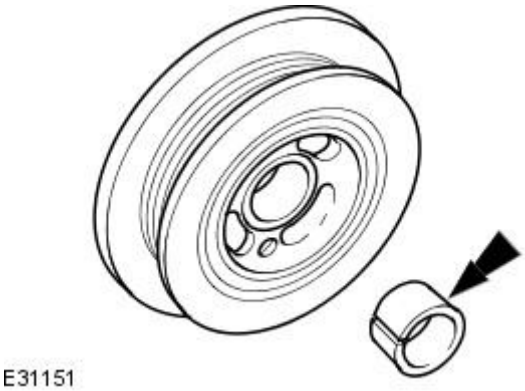


**4.** NOTE: Check crankshaft pulley and locking ring for damage.

Clean all crankshaft pulley mating faces.

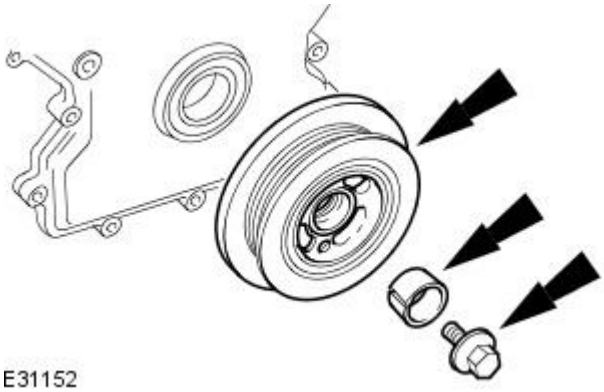


**5.** CAUTIONS:

The screw thread in the crankshaft must be cleaned out before a new crankshaft pulley bolt is installed.

A new crankshaft pulley bolt must be used.

Install, but do not tighten, a new crankshaft pulley retaining bolt.

- Install the crankshaft pulley and locking ring to the crankshaft.

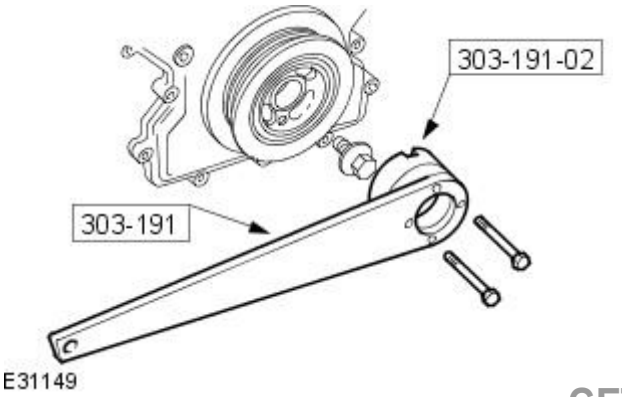


**6.** CAUTION: Under no circumstances should the crankshaft setting peg 303-645 be used in the following operations to lock the crankshaft.

Using special tools, retain the crankshaft pulley.

- Tighten the crankshaft pulley retaining bolt to 375 Nm.

GETtheMANUALS.org

**7.** Remove the special tools.

**8.** Attach the engine harness.

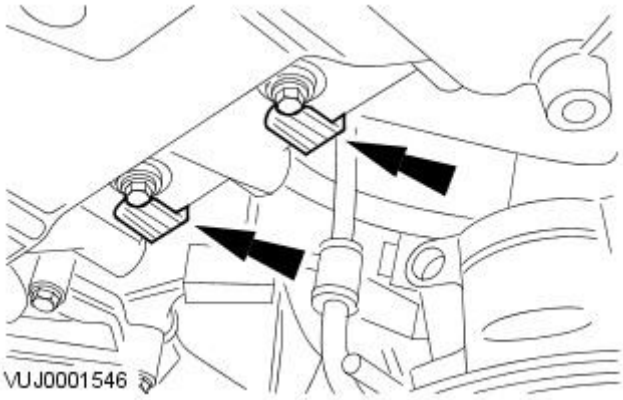


**9.** Install the power steering pump mounting bracket.

- Tighten to 25 Nm.

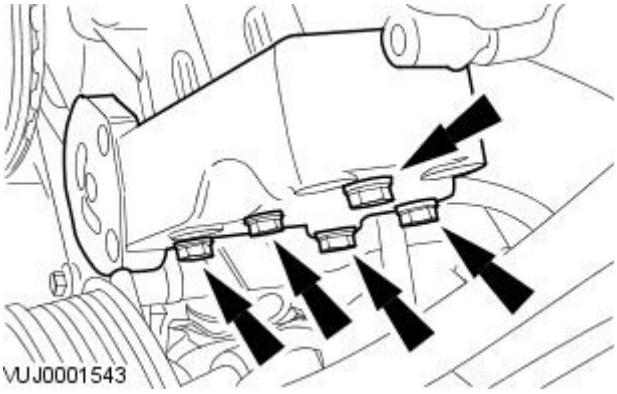


All vehicles

**10.** Install the accessory drive belt idler pulley.

- Tighten to 25 Nm.

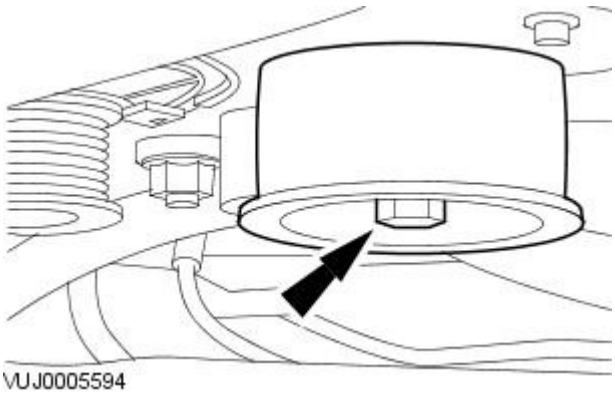


**11.** Install the water pump pulley.

- Tighten to 10 Nm + 45°.

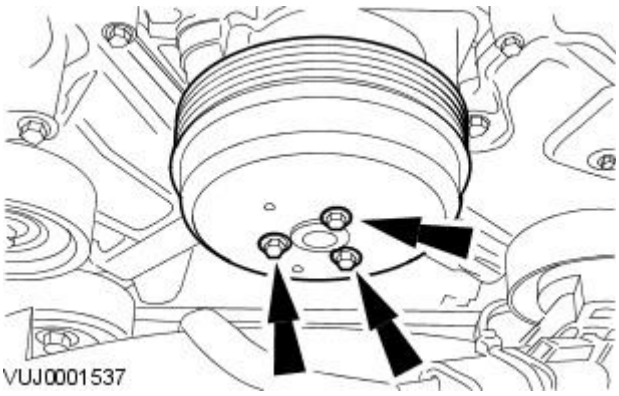


**12.** Install the air conditioning compressor.
For additional information, refer to Section 412-03 Air Conditioning.

**13.** Install power steering pump.
For additional information, refer to Section 211-02 Power Steering.

Vehicles with supercharger

**14.** Install the supercharger drive belt.
For additional information, refer to Section 303-05 Accessory Drive.

Vehicles without supercharger

**15.** Install the oil cooler.
For additional information, refer to Oil Cooler in this section.

GETtheMANUALS.org

**16.** Install the left-hand valve cover.
For additional information, refer to Valve Cover LH in this section.

**17.** Install the right-hand valve cover.
For additional information, refer to Valve Cover RH in this section.

**18.** Remove the cooling fan motor and shroud. For additional information, refer to Section 303-03A Engine Cooling / 303-03B Supercharger Cooling / 303-03C Engine Cooling.

GETtheMANUALS.org

# Engine - V8 4.2L Petrol/V8 S/C 4.2L Petrol - Engine Front CoverVIN Range: N52048->N99999

In-vehicle Repair

## Removal

All vehicles

1. Remove the left-hand valve cover.
   For additional information, refer to: Valve Cover LH - VIN Range: N52048->N99999 (303-01B Engine - V8 4.2L Petrol/V8 S/C 4.2L Petrol, In-vehicle Repair).
2. Remove the right-hand valve cover.
   For additional information, refer to: Valve Cover RH - VIN Range: N52048->N99999 (303-01B Engine - V8 4.2L Petrol/V8 S/C 4.2L Petrol, In-vehicle Repair).
3. Remove the crankshaft pulley.
   For additional information, refer to: Crankshaft Pulley (303-01B Engine - V8 4.2L Petrol/V8 S/C 4.2L Petrol, In-vehicle Repair).

Vehicles without supercharger

4. Remove the oil cooler.
   For additional information, refer to: Oil Cooler - Vehicles Without: Supercharger (303-01B Engine - V8 4.2L Petrol/V8 S/C 4.2L Petrol, In-vehicle Repair).

Vehicles with supercharger

5. Disconnect the coolant hose.

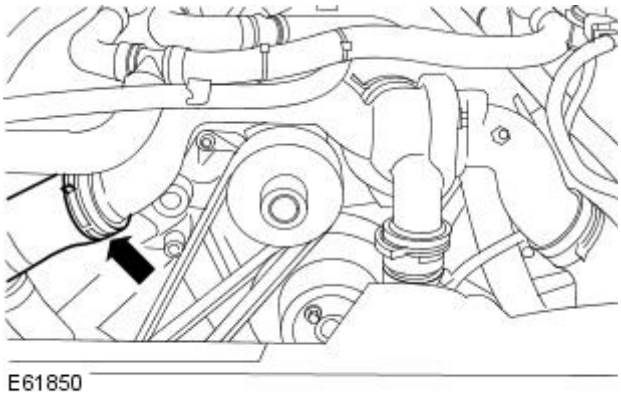

E61850

6. Disconnect the coolant hose.

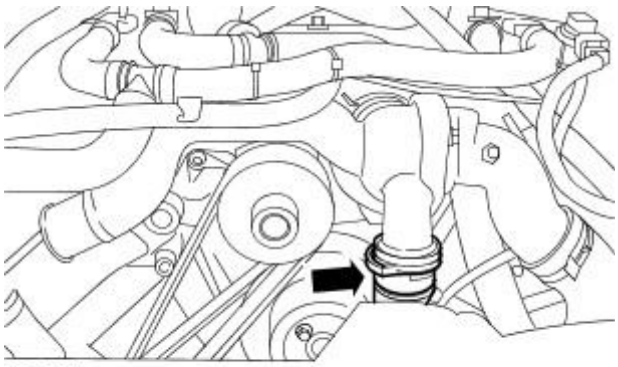

E61851

GETtheMANUALS.org

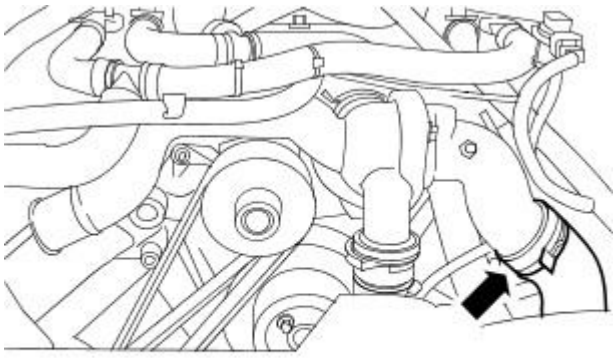

E61852

**7.** Disconnect the coolant hose.

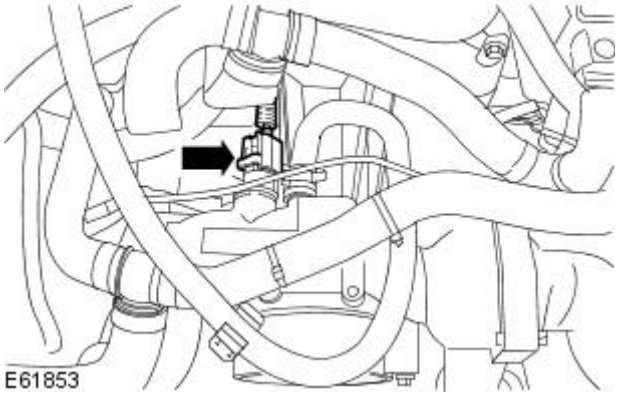

E61853

**8.** Disconnect the engine coolant temperature (ECT) sensor electrical connector.

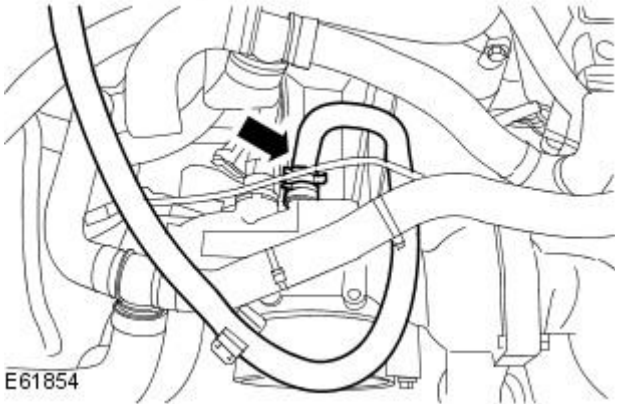

E61854

**9.** Disconnect the coolant hose.

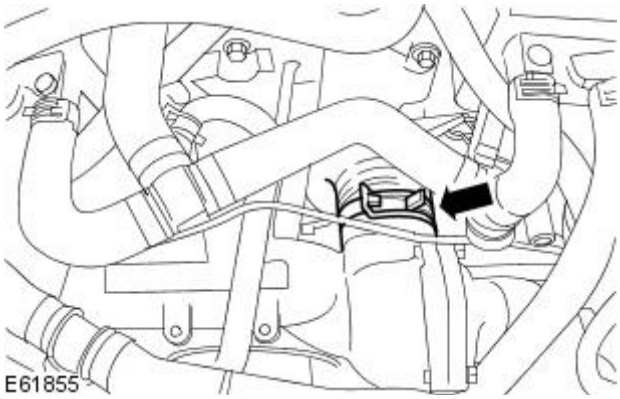

E61855

**10.** Disconnect the coolant hose.

GETtheMANUALS.org

**11.** Detach the coolant assembly.

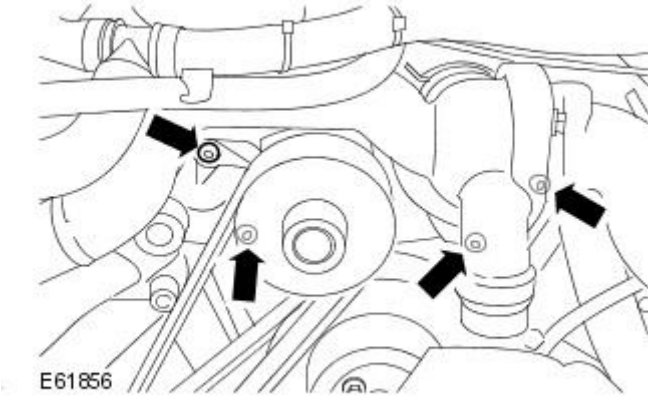


**12.** Remove the coolant assembly.

- Disconnect the coolant hose.
- Remove and discard the O-ring seals.

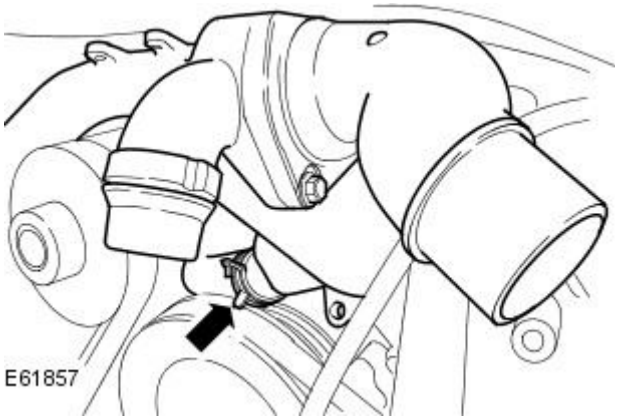


All vehicles

**13.** Remove the water pump pulley.

- Using a suitable tool, retain the water pump pulley.

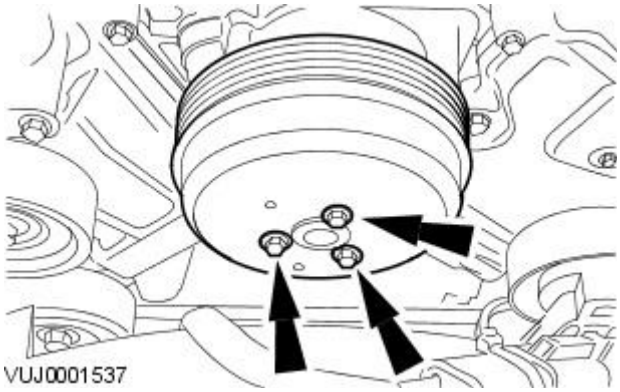


**14.** Remove the air conditioning (A/C) compressor. For additional information, refer to: (412-03 Air Conditioning)

Air Conditioning (A/C) Compressor - 2.5L NA V6 - AJV6/3.0L NA V6 - AJ27 (Removal and Installation),
Air Conditioning (A/C) Compressor - V8 4.2L Petrol/V8 S/C 4.2L Petrol (Removal and Installation).

**15.** CAUTIONS:

Cap the power steering line to prevent loss of fluid and prevent dirt ingress.

If power steering fluid comes into contact with the paintwork, the affected area must be immediately washed down with cold water.

• NOTE: Drain the fluid into a suitable container.

Disconnect the power steering reservoir to power steering pump supply line.

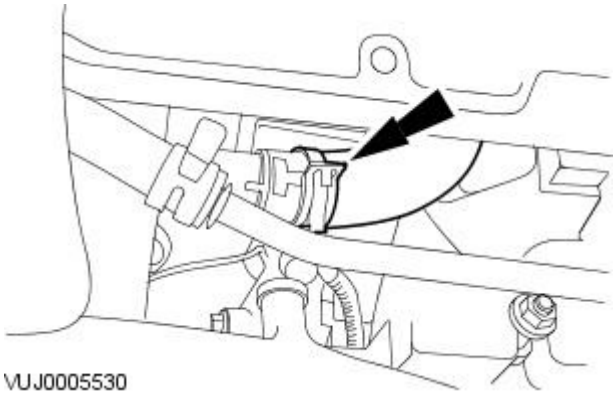


GETtheMANUALS.org

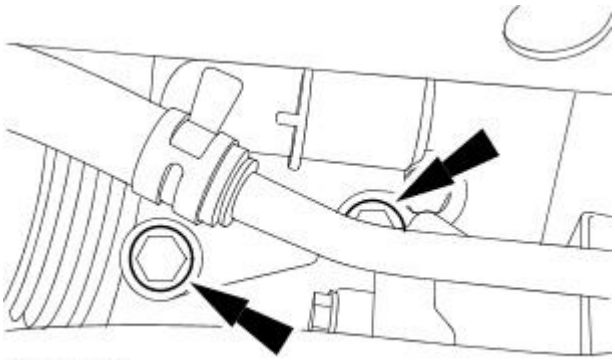


**16.** Remove the power steering pump lower retaining bolts.

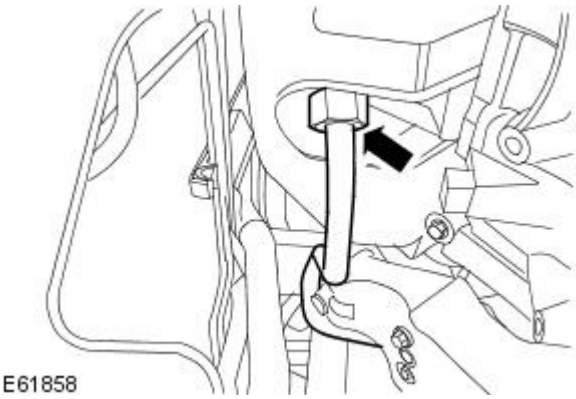


**17.** Disconnect the secondary air injection (AIR) control valve to exhaust manifold tube.

**18.** Lower the vehicle.

**19.** CAUTIONS:

Cap the power steering lines to prevent loss of fluid and prevent dirt ingress.

If power steering fluid comes into contact with the paintwork, the affected area must be immediately washed down with cold water.

- NOTE: Drain the fluid into a suitable container.

Disconnect the power steering pump to steering gear high-pressure line.

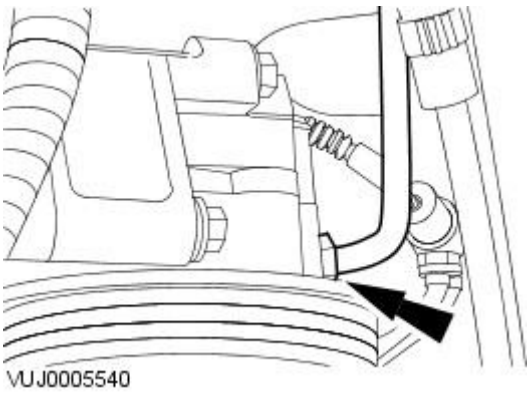


**20.** Remove the power steering pump.

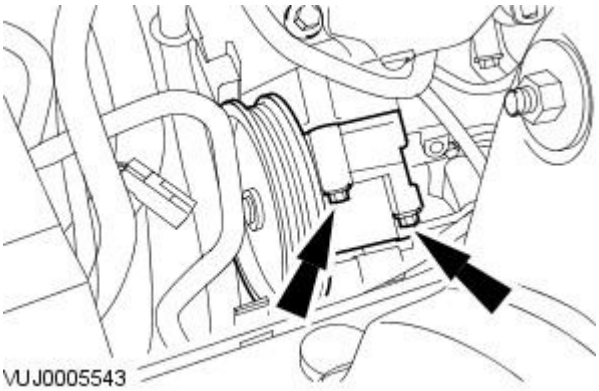


**21.** Remove the accessory drive belt idler pulley.

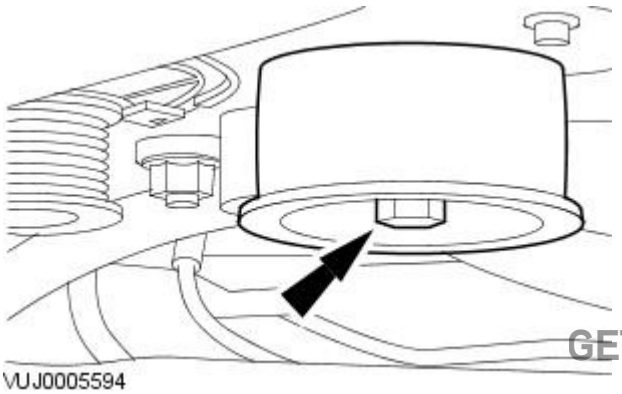


GETtheMANUALS.org

Vehicles with supercharger

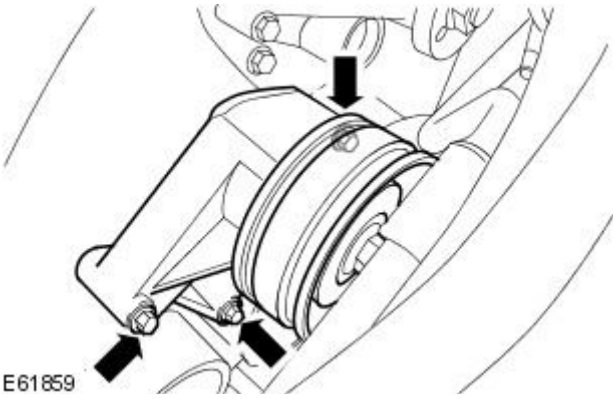


**22.** Remove the supercharger belt idler pulley and bracket assembly.

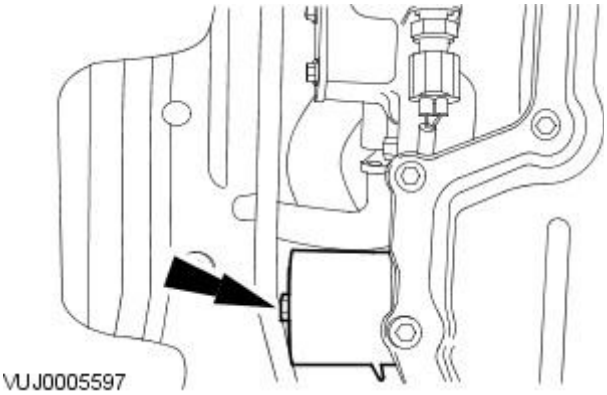


**23.** Remove the supercharger belt tensioner.

All vehicles

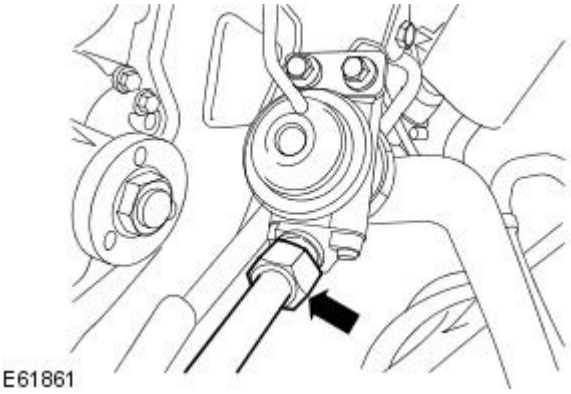


**24.** NOTE: Vehicles with supercharger shown, vehicles without supercharger similar.

Disconnect the AIR control valve to exhaust manifold tube.

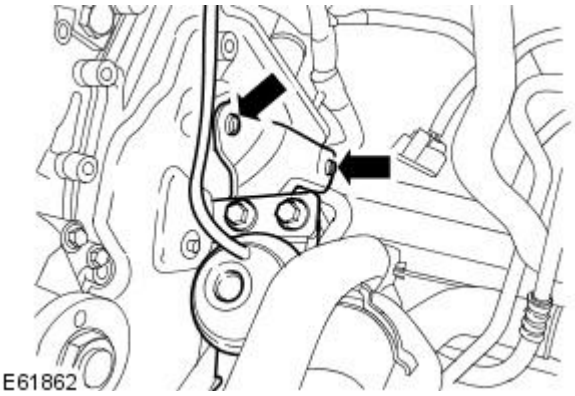


**25.** NOTE: Vehicles with supercharger shown, vehicles without supercharger similar.

Reposition the AIR control valve and bracket assembly.

- Remove the retaining bolts.

Vehicles with supercharger

GETtheMANUALS.org

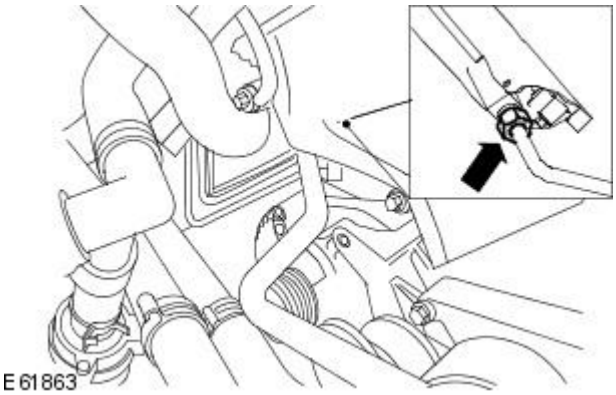


**26.** Disconnect the AIR control valve to exhaust manifold tube.

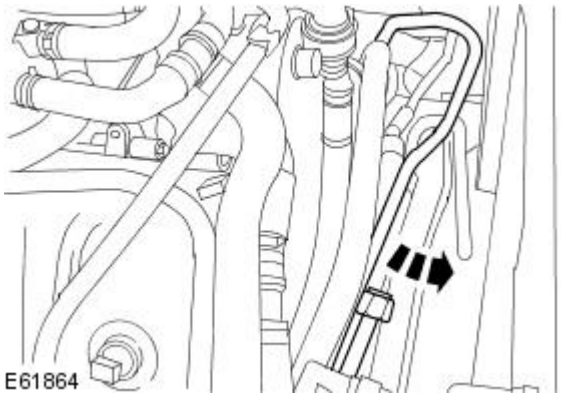


**27.** Remove the AIR control valve to exhaust manifold tube.

All vehicles

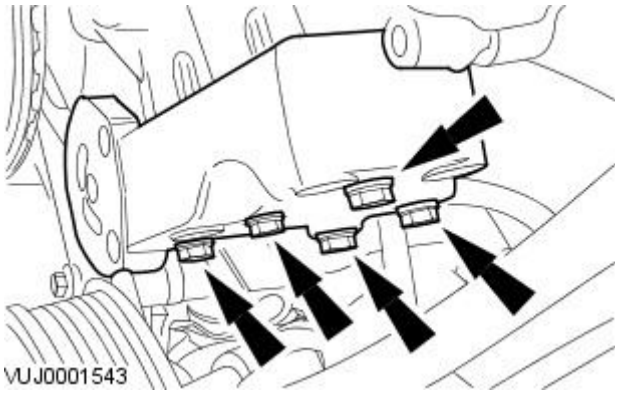


**28.** Remove the power steering pump mounting bracket.

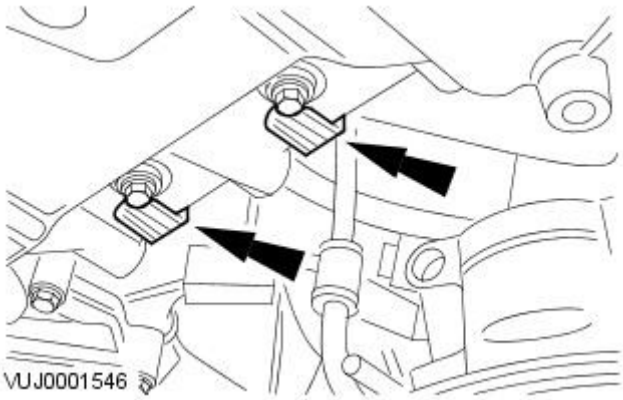


**29.** Detach the engine harness.

GETtheMANUALS.org

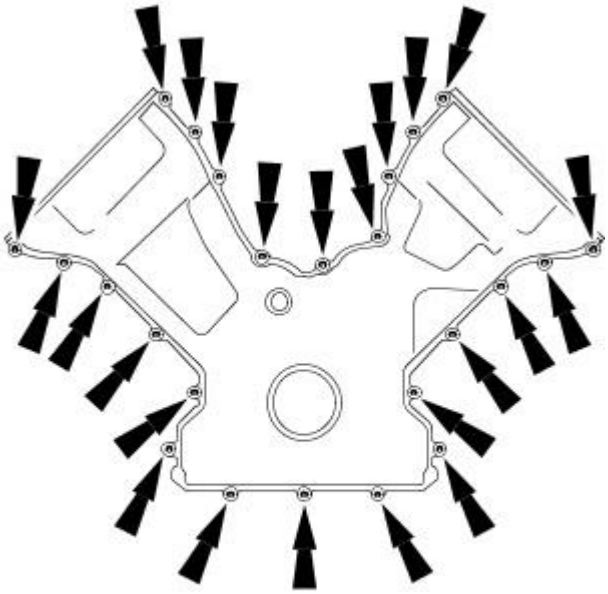

VUJ0002018

**30.** Remove the engine front cover.

- Remove and discard all the seals.

## Installation

All vehicles

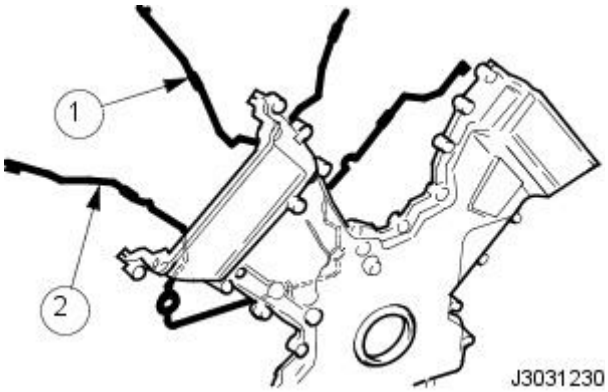


J3031230

**1.** Install new seals to the timing cover.

1. Install the new seal to the inner groove on the face of the timing cover.
2. Install the new seal to the outer groove on the face of the timing cover.

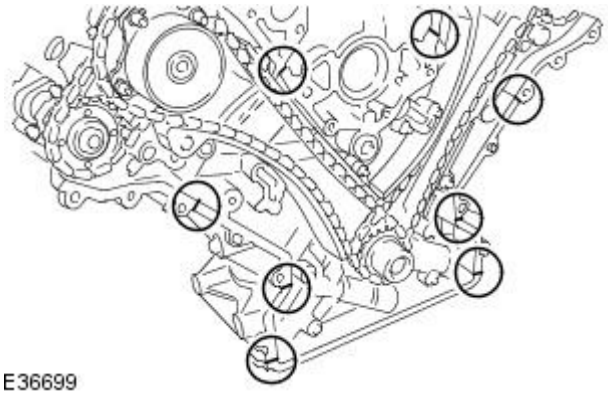

E36699

**2.** Apply sealant to the eight joints on the engine face.

- Sealant beads to be 3mm diameter and 12mm long. Cut the nozzle of the sealant tube to produce a 3 mm (0.12 in) bead. (Install and tighten the securing bolts within twenty minutes of sealant application).

GETtheMANUALS.org

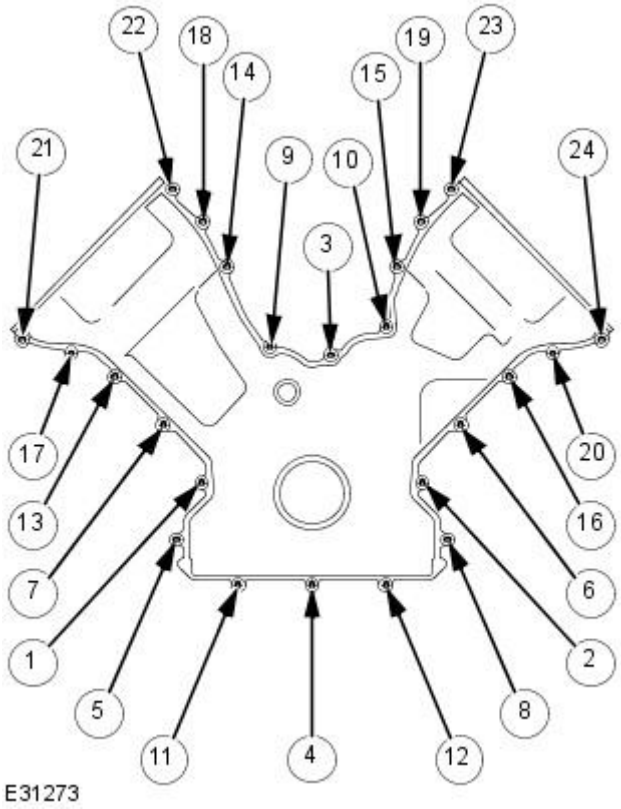


**3.** Install the timing cover.

- Tighten in the sequence shown.
- Tighten to 12 Nm.

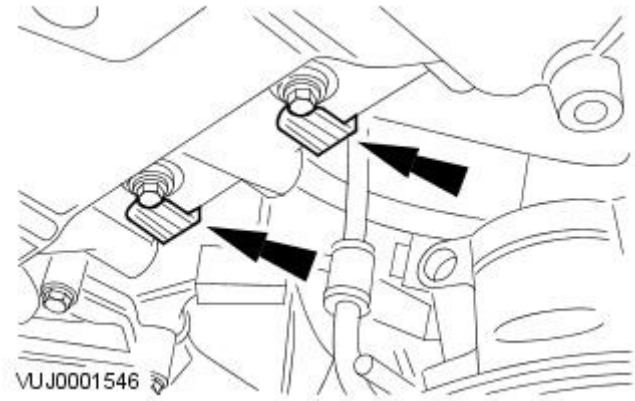


**4.** Attach the engine harness.

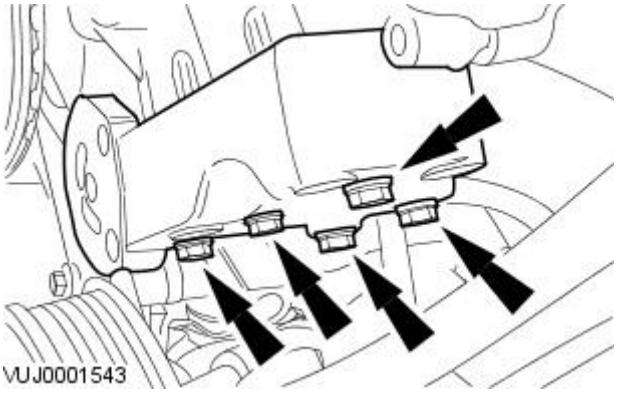


**5.** Install the power steering pump mounting bracket.

- Tighten to 25 Nm.

Vehicles with supercharger

GETtheMANUALS.org

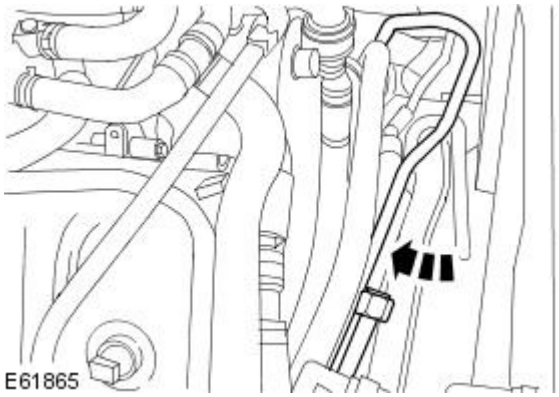


**6.** Install the AIR control valve to exhaust manifold tube.

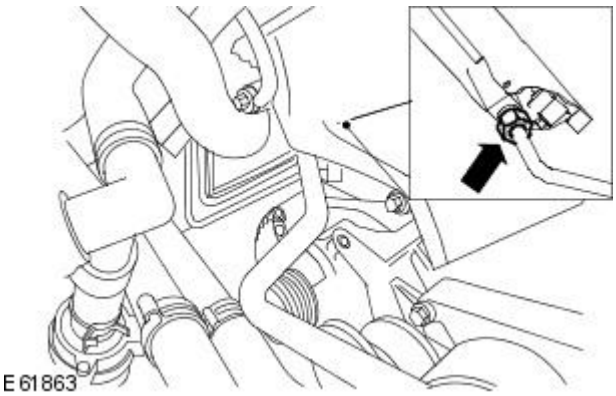


**7.** Connect the AIR control valve to exhaust manifold tube.

- Tighten to 35 Nm.

All vehicles

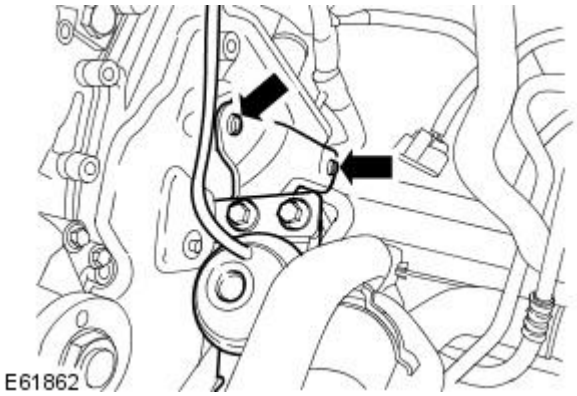


**8.** NOTE: Vehicles with supercharger shown, vehicles without supercharger similar.

Reposition the AIR control valve and bracket assembly.

- Tighten to 8 Nm.

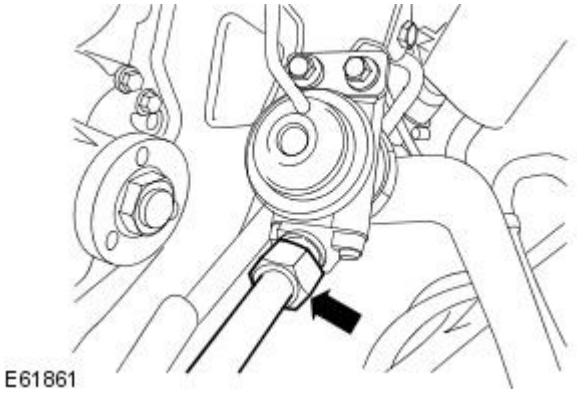


**9.** NOTE: Vehicles with supercharger shown, vehicles without supercharger similar.

Connect the AIR control valve to exhaust manifold tube.

- Tighten to 35 Nm.

Vehicles with supercharger

GETtheMANUALS.org

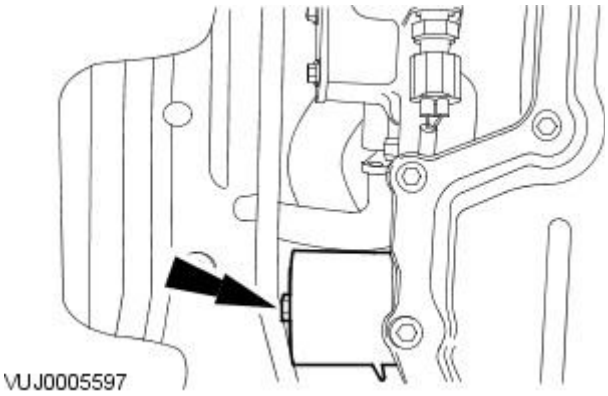


**10.** Install the supercharger belt tensioner.

- Tighten to 40 Nm.

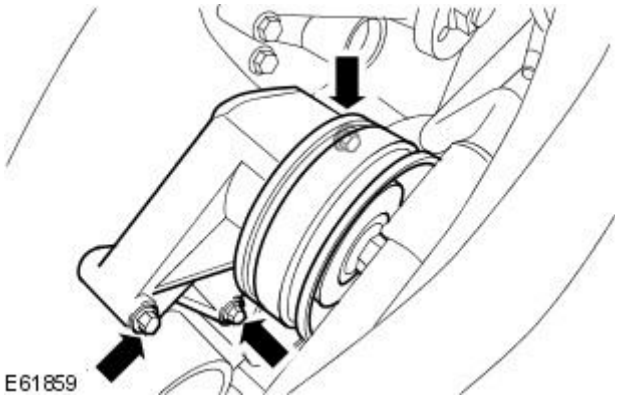


**11.** Install the supercharger belt idler pulley and bracket assembly.

- Tighten to 9 Nm.

All vehicles

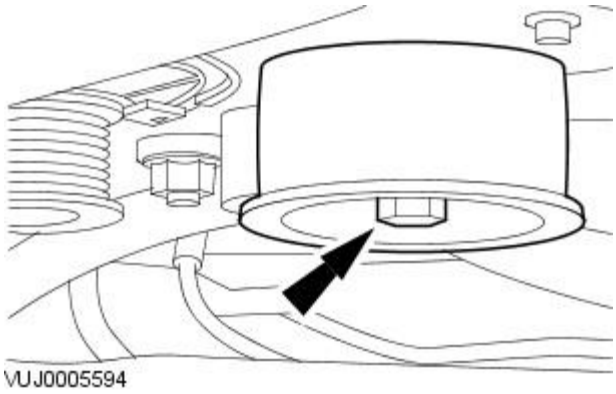


**12.** Install the accessory drive belt idler pulley.

- Tighten to 61 Nm.

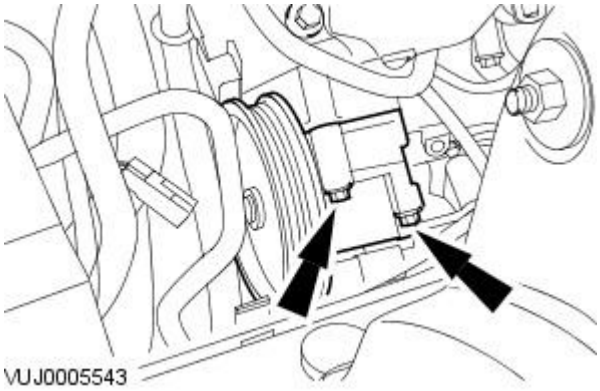


**13.** Install the power steering pump.

- Tighten to 25 Nm.

GETtheMANUALS.org

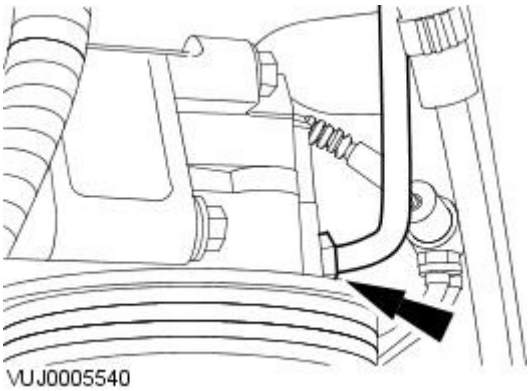


**14.** NOTE: Remove the blanking caps.

Connect the power steering pump to steering gear high-pressure line.

- Install a new O-ring seal.
- Tighten to 25 Nm.

**15.** Raise the vehicle.

**16.** Connect the AIR control valve to exhaust manifold tube.

- Tighten to 35 Nm.

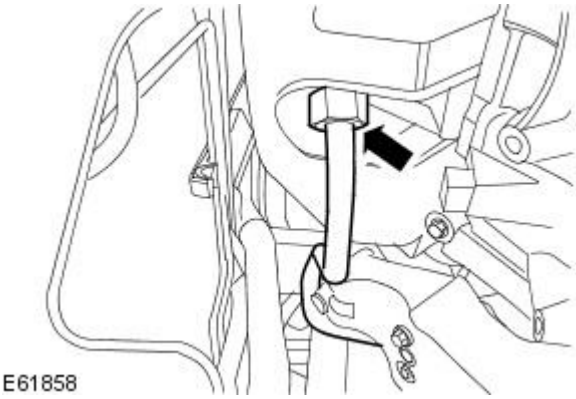


**17.** Install the power steering pump lower retaining bolts.

- Tighten to 25 Nm.

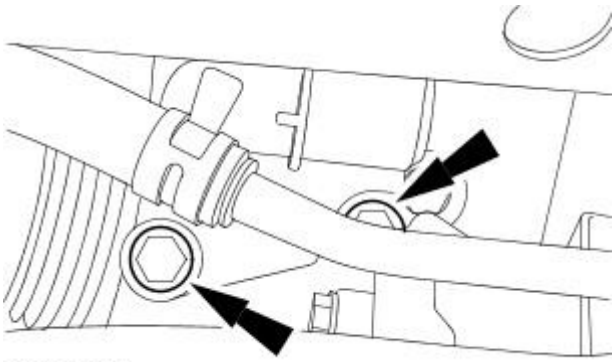


**18.** NOTE: Remove the blanking caps.

Connect the power steering reservoir to power steering pump supply line.

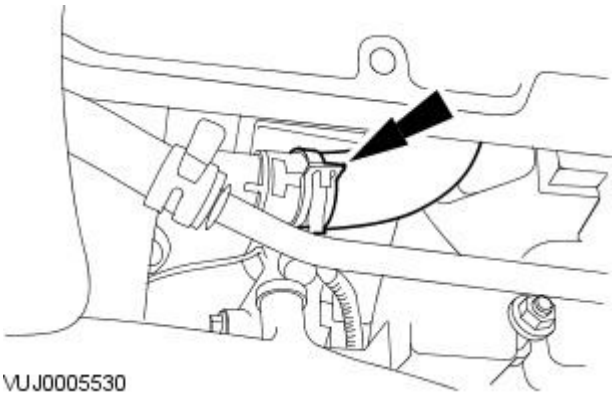


**19.** Install the A/C compressor. For additional information, refer to: (412-03 Air Conditioning)

Air Conditioning (A/C) Compressor - 2.5L NA V6 - AJV6/3.0L NA V6 - AJ27 (Removal and Installation),
Air Conditioning (A/C) Compressor - V8 4.2L Petrol/V8 S/C 4.2L Petrol (Removal and Installation).

GETtheMANUALS.org

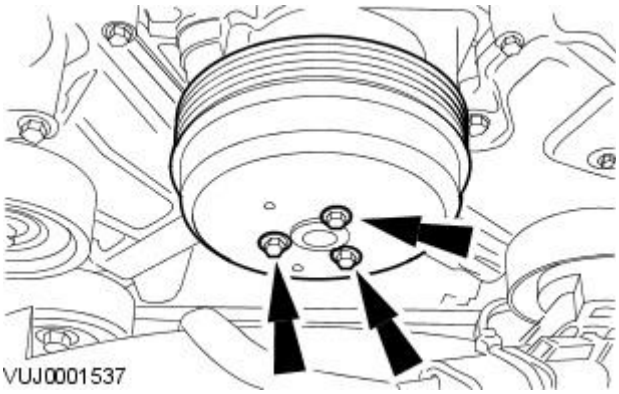


**20.** Install the water pump pulley.

- Using a suitable tool, retain the water pump pulley.
- Tighten to 10 Nm + 45°.

Vehicles with supercharger

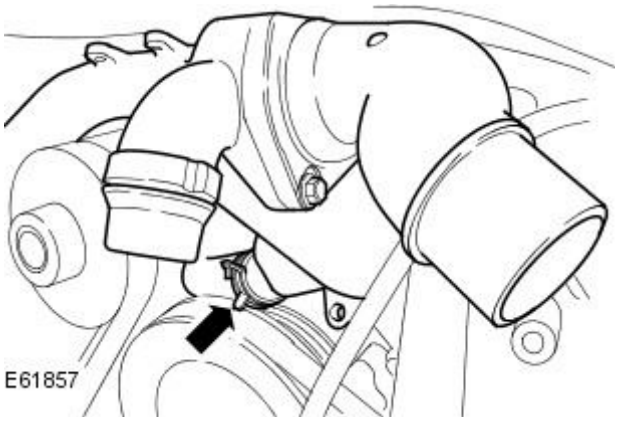


**21.** Install the coolant assembly.

- Install new O-ring seals.
- Connect the coolant hose.

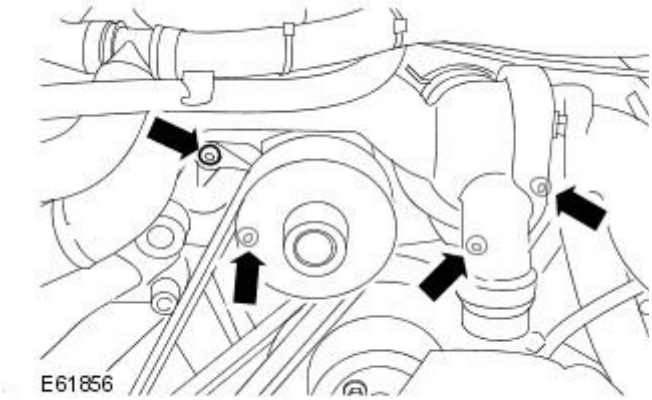


**22.** Attach the coolant assembly.

- Tighten to 9 Nm.

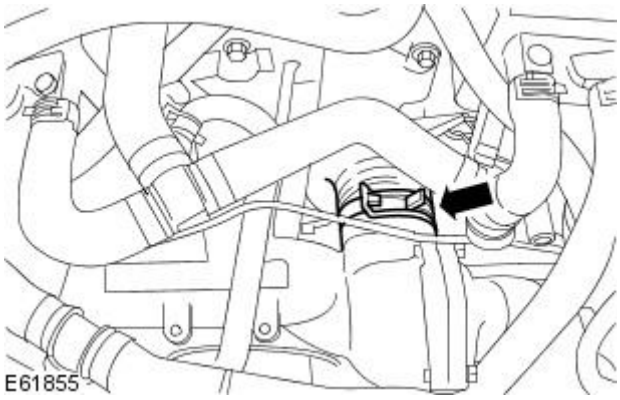


**23.** Connect the coolant hose.

GETtheMANUALS.org

**24.** Connect the coolant hose.

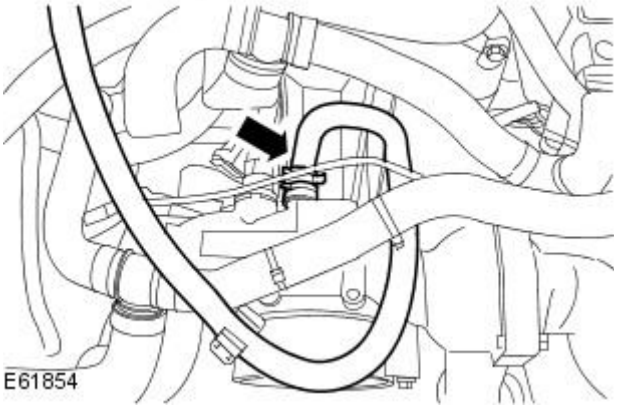


**25.** Connect the ECT sensor electrical connector.

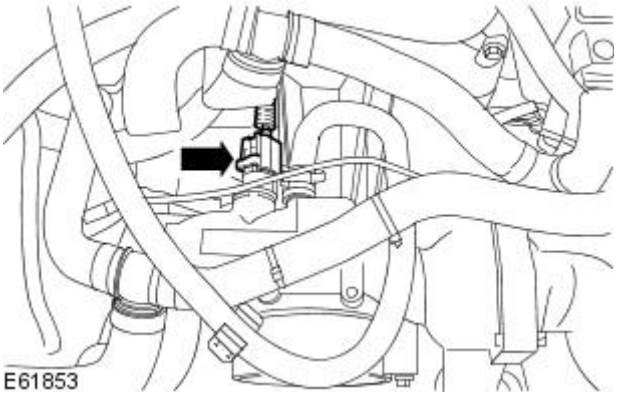


**26.** Connect the coolant hose.

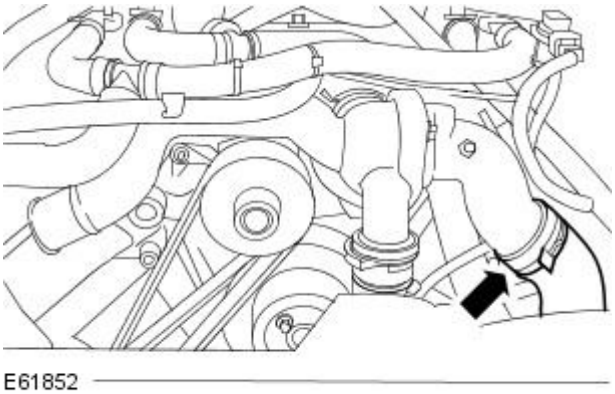


**27.** Connect the coolant hose.

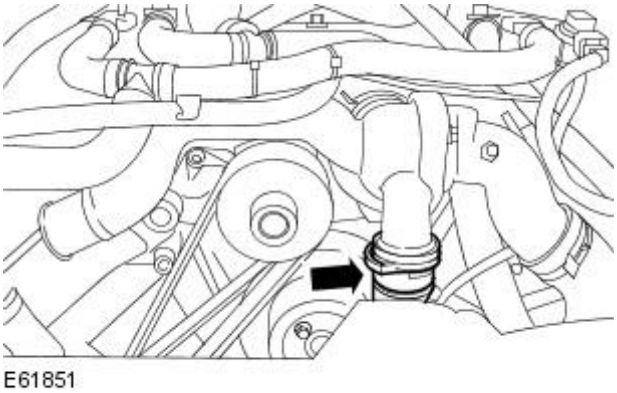


GETtheMANUALS.org

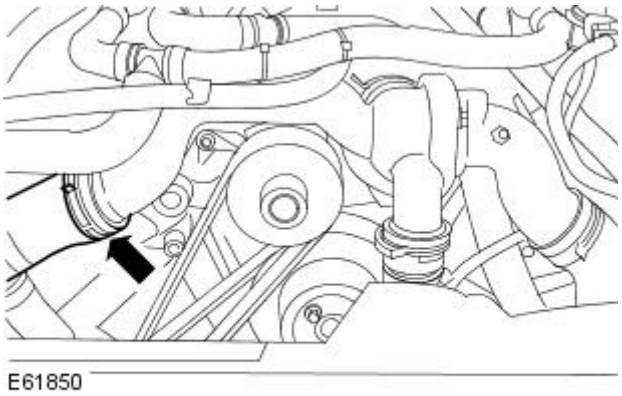


**28.** Connect the coolant hose.

Vehicles without supercharger

**29.** Install the oil cooler.
For additional information, refer to: Oil Cooler - Vehicles Without: Supercharger (303-01B Engine - V8 4.2L Petrol/V8 S/C 4.2L Petrol, In-vehicle Repair).

All vehicles

**30.** Install the crankshaft pulley.
For additional information, refer to: Crankshaft Pulley (303-01B Engine - V8 4.2L Petrol/V8 S/C 4.2L Petrol, In-vehicle Repair).

**31.** Install the right-hand valve cover.
For additional information, refer to: Valve Cover RH - VIN Range: N52048->N99999 (303-01B Engine - V8 4.2L Petrol/V8 S/C 4.2L Petrol, In-vehicle Repair).

**32.** Install the left-hand valve cover.
For additional information, refer to: Valve Cover LH - VIN Range: N52048->N99999 (303-01B Engine - V8 4.2L Petrol/V8 S/C 4.2L Petrol, In-vehicle Repair).

GETtheMANUALS.org

# Engine - V8 4.2L Petrol / V8 S/C 4.2L Petrol - Engine Mount LH

In-vehicle Repair

| Special Tool(s) | |
|---|---|
| 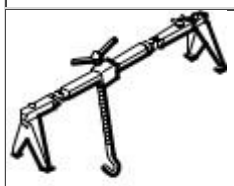 303-021 | Engine Support Beam<br><br>303-021 |
| 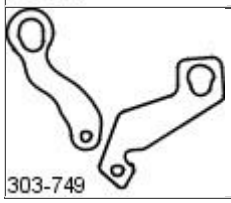 303-749 | Engine lifting brackets<br><br>303-749 |

## Removal

Vehicles without supercharger

1. Remove the throttle body. For additional information, refer to Section 303-04A Fuel Charging and Controls / 303-04B Fuel Charging and Controls / 303-04C Fuel Charging and Controls / 303-04D Fuel Charging and Controls - Turbocharger.

Vehicles with supercharger

2. Remove the air cleaner outlet pipe. For additional information, refer to Section 303-12A Intake Air Distribution and Filtering / 303-12B Intake Air Distribution and Filtering / 303-12C Intake Air Distribution and Filtering.

All vehicles

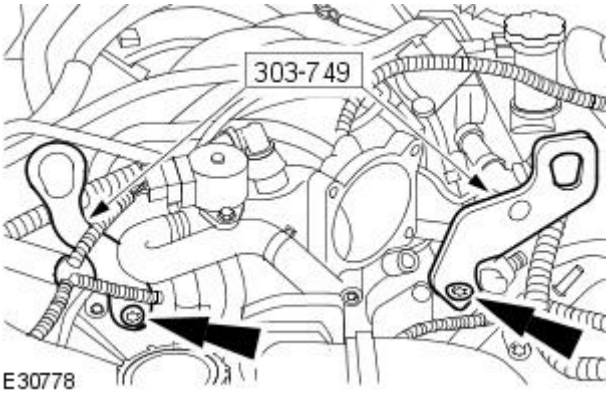


3. NOTE: Vehicles with 4.2L engine without supercharger shown, vehicles with 4.2L engine with supercharger similar.

   Install the special tools.

GETtheMANUALS.org

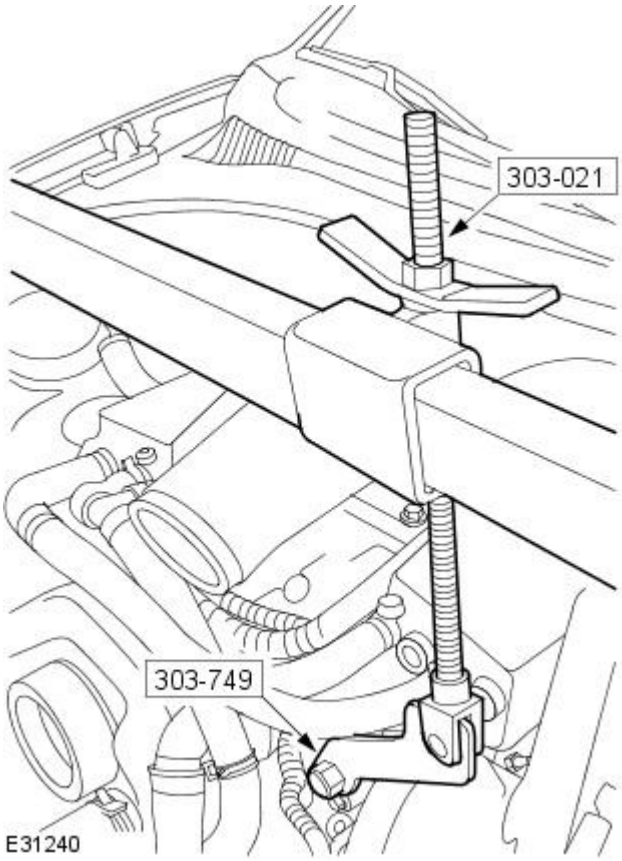


**4.** NOTE: Vehicles with 4.2L engine with supercharger shown, vehicles with 4.2L engine without supercharger similar.

• NOTE: Left-hand shown, Right-hand similar.

Install the special tool.

**5.** Remove the air deflector.
For additional information, refer to Section 501-02 Front End Body Panels.

**6.** Remove the steering gear shaft pinch bolt.

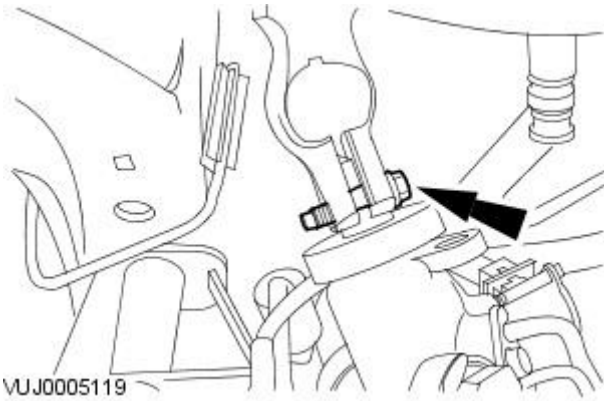


**7.** Detach the steering gear.

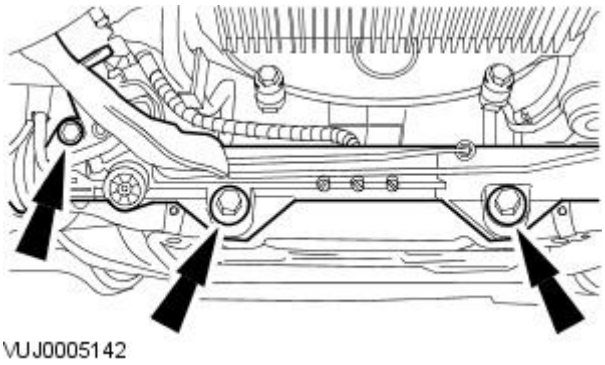


GETtheMANUALS.org

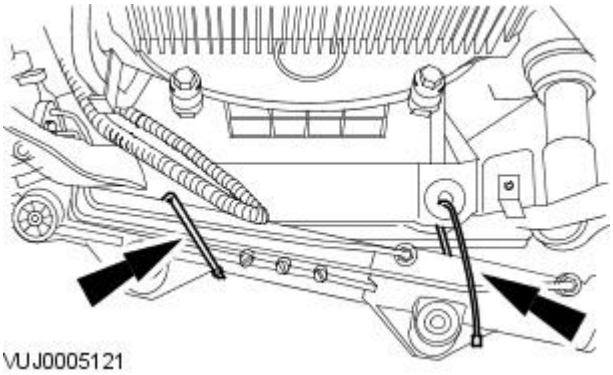


**8.** Secure the steering gear.

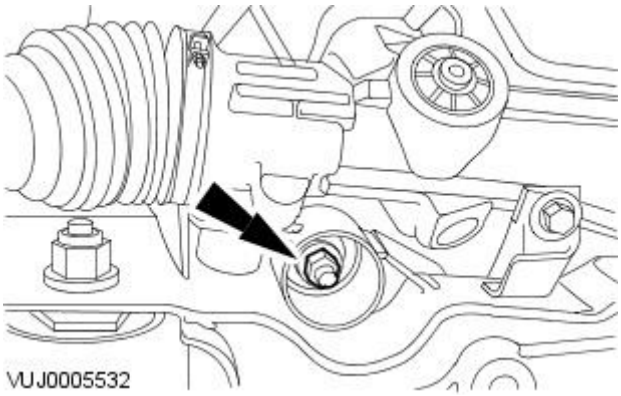


**9.** Remove the engine mount retaining nut.

**10.** Lower the vehicle.

**11.** NOTE: Vehicles with 4.2L engine with supercharger shown, vehicles with 4.2L engine without supercharger similar.

- NOTE: Left-hand shown, Right-hand similar.

Using the special tools, raise the engine to a suitable height.

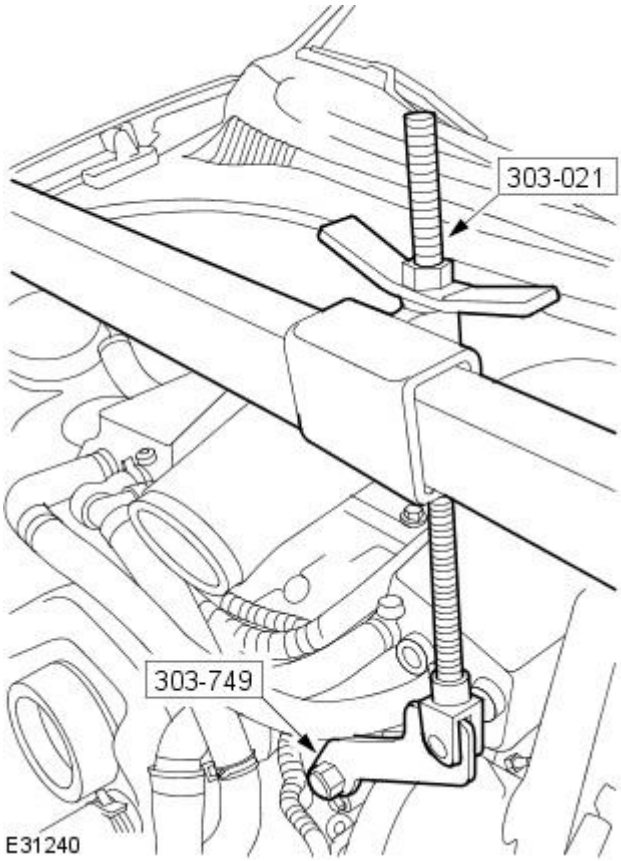


**12.** Raise the vehicle.

GETtheMANUALS.org

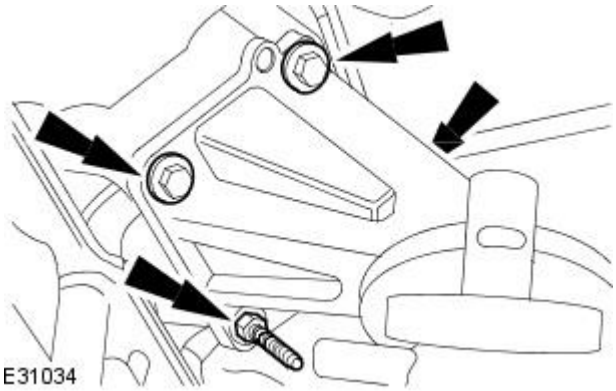


**13.** Remove the engine mount and bracket assembly.

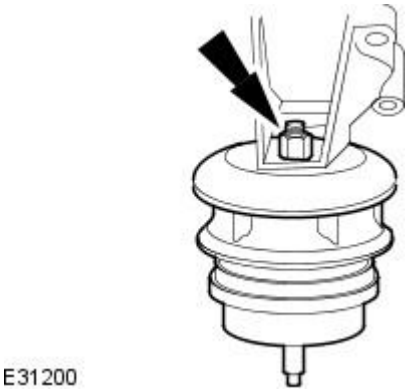


**14.** Remove the engine mount.

## Installation

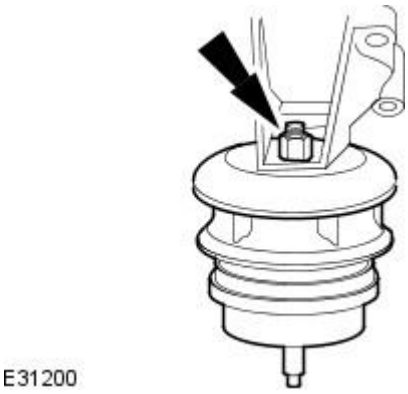


**1.** CAUTION: Make sure the engine mount location peg is correctly located into the engine bracket. Failure to follow this instruction may result in damage to the vehicle.

To install, reverse the removal procedure.

- Tighten to 55 Nm (+/- 15%).

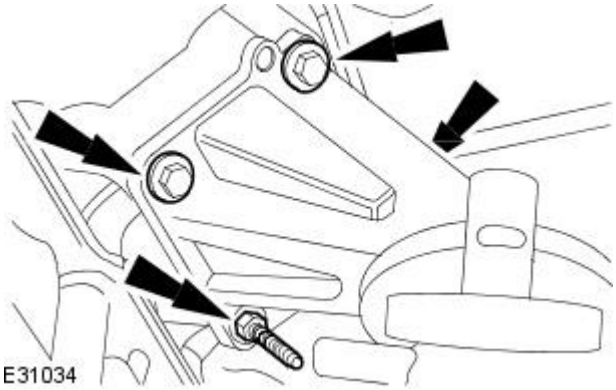


**2.** Tighten to 40 Nm (+/- 15%).

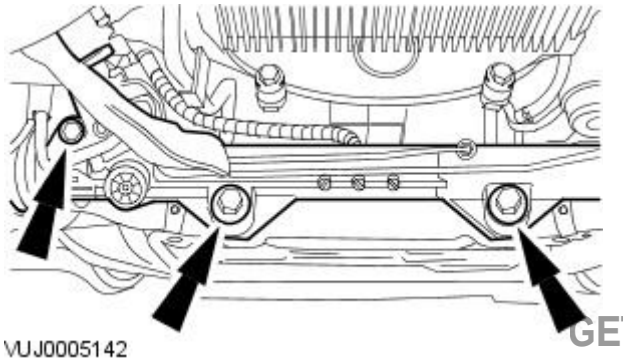


**3.** Tighten to 100 Nm.

GETtheMANUALS.org

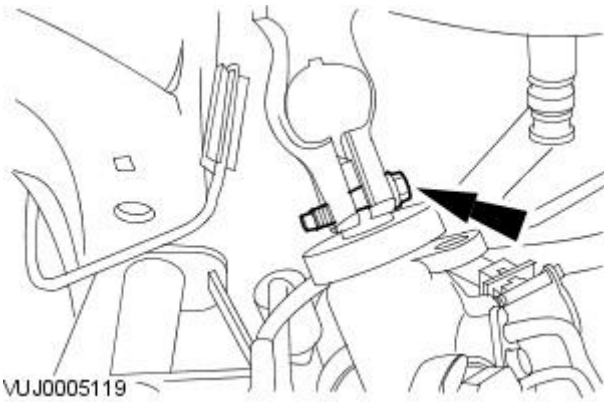


**4.** Tighten to 35 Nm.

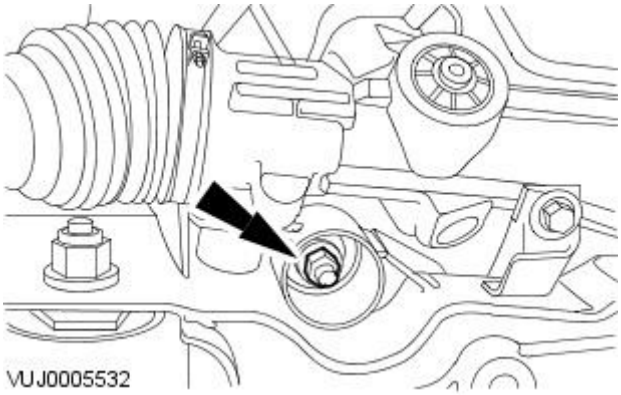


**5.** Tighten to 63 Nm (+/- 15%).

GETtheMANUALS.org

# Engine - V8 4.2L Petrol/V8 S/C 4.2L Petrol - Exhaust Manifold RHVIN Range: M45255->N52047

In-vehicle Repair

## Removal

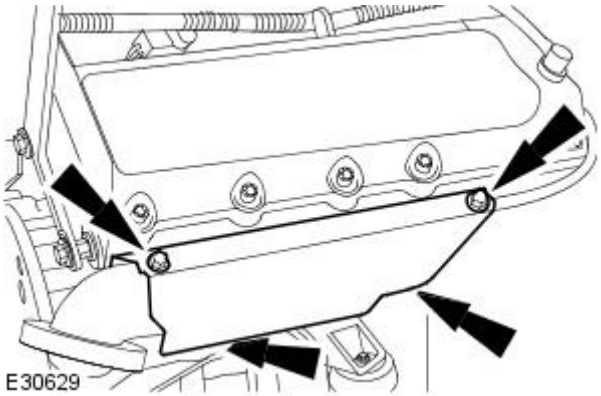


1. Remove the exhaust system.
   For additional information, refer to Section 309-00 Exhaust System.
2. Remove the right-hand exhaust manifold heat shield

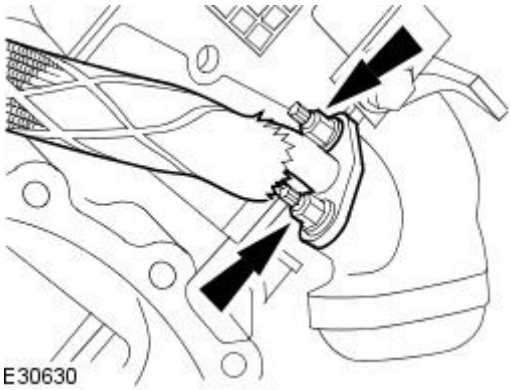


3. Detach the exhaust gas recirculation (EGR) valve.
   - Remove and discard the retaining nuts and gasket.

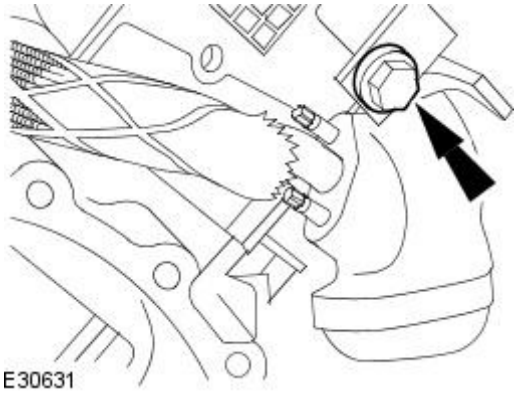


4. Remove the right-hand exhaust manifold heat shield/gasket retaining bolt.

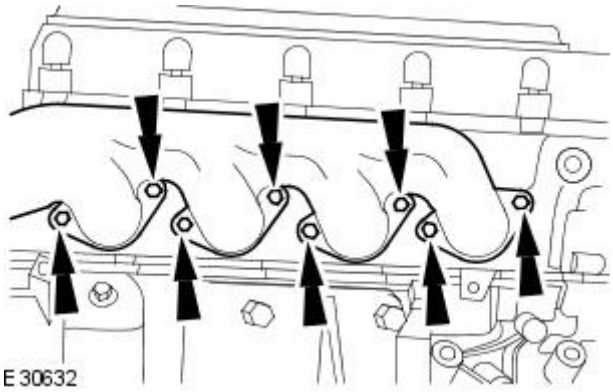


5. NOTE: New exhaust manifold retaining studs must be fitted if the old studs are removed.

   Remove the exhaust manifold.
   - Remove and discard the retaining nuts and heat shield/gasket.

## Installation

GETtheMANUALS.org

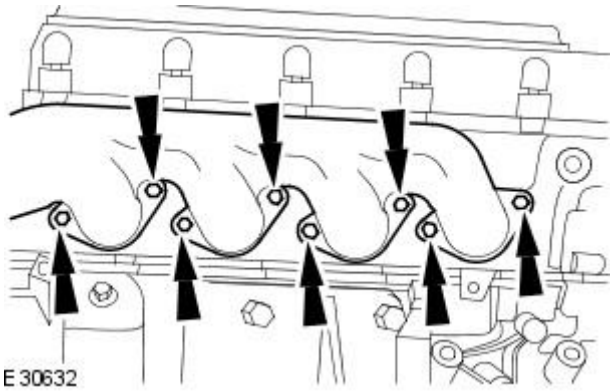


**1.** CAUTIONS:

When all retaining nuts have been torqued, re-torque all retainig nuts to 25 Nm.

Ensure exhaust manifold and heat shield/gasket is correctly aligned to cylinder head and studs.

Install the exhaust manifold.

- Install new retaining nuts and a new heat shield/gasket.
- Tighten to 25 Nm.

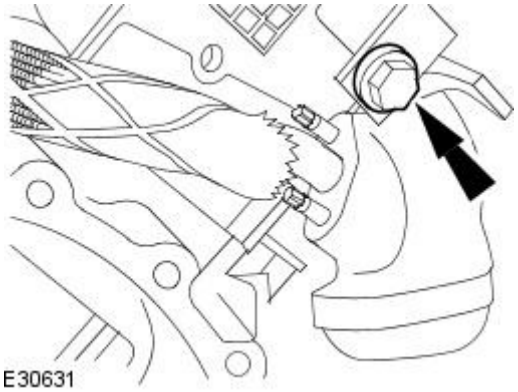


**2.** Install the right-hand exhaust manifold heat shield/gasket retaining bolt.

- Tighten to 50 Nm.

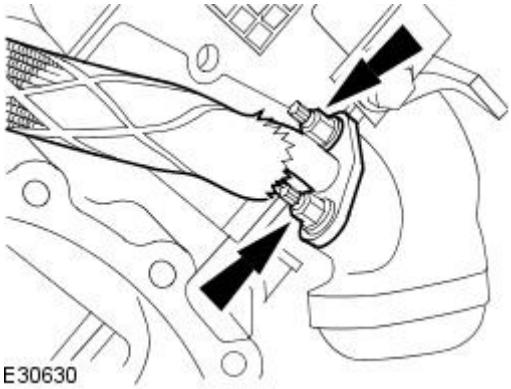


**3.** Attach the exhaust gas recirculation (EGR) valve.

- Install new retaining nuts and a new gasket.
- Tighten to 22 Nm.

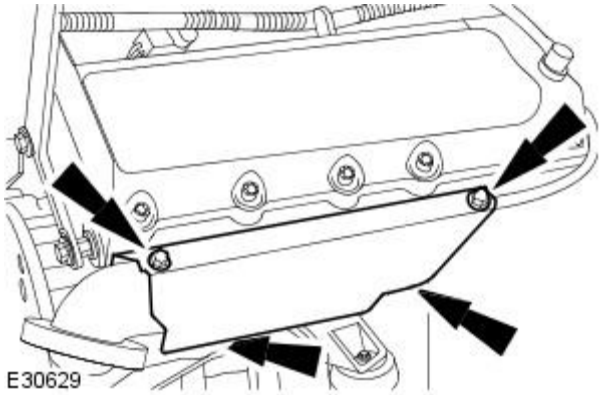


**4.** Install the right-hand exhaust manifold heat shield

- Tighten to 3 Nm.

**5.** Install the exhaust system.
For additional information, refer to Section 309-00 Exhaust System.

GETtheMANUALS.org

# Engine - V8 4.2L Petrol/V8 S/C 4.2L Petrol - Exhaust Manifold RHVIN Range: N52048->N99999

In-vehicle Repair

## Removal

Right-hand drive vehicles

1. Center the steering wheel.
   - Lock in position, remove the ignition key.

All vehicles

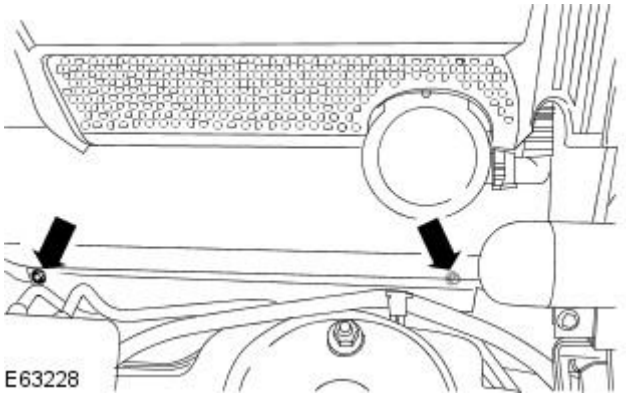


2. Remove the right-hand exhaust manifold heat shield upper retaining bolts.

3. Remove the right-hand catalytic converter.
   For additional information, refer to: Catalytic Converter - V8 4.2L Petrol/V8 S/C 4.2L Petrol/2.5L NA V6 - AJV6/3.0L NA V6 - AJ27 (309-00 Exhaust System, Removal and Installation).

Right-hand drive vehicles

4. Remove the steering gear coupling upper pinch bolt

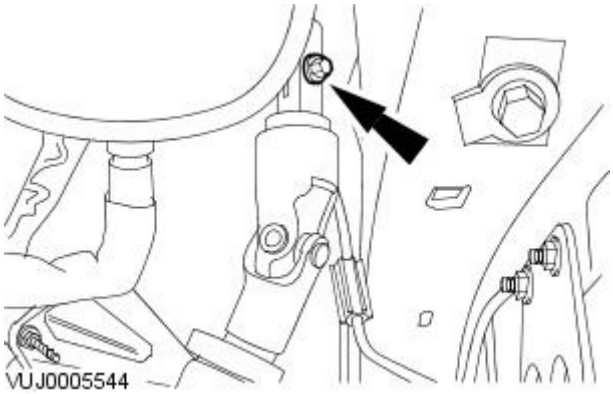


5. Remove the steering gear coupling.
   - Remove the steering gear coupling lower pinch bolt.

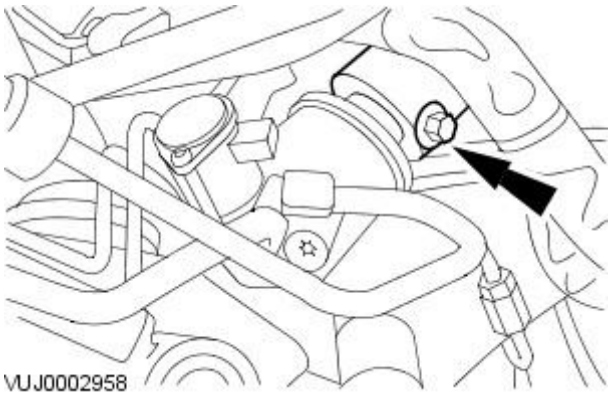


All vehicles

GETtheMANUALS.org

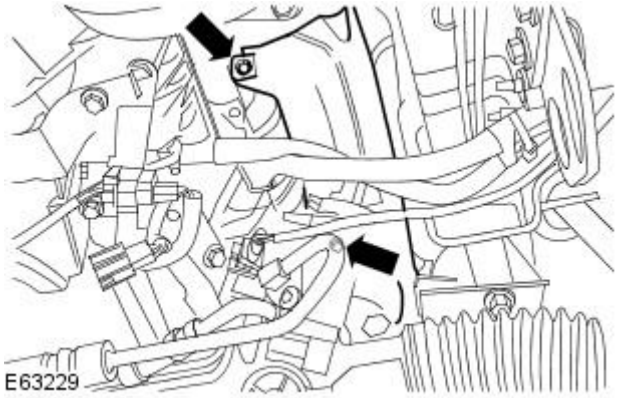


**6.** Remove the right-hand exhaust manifold heat shield.

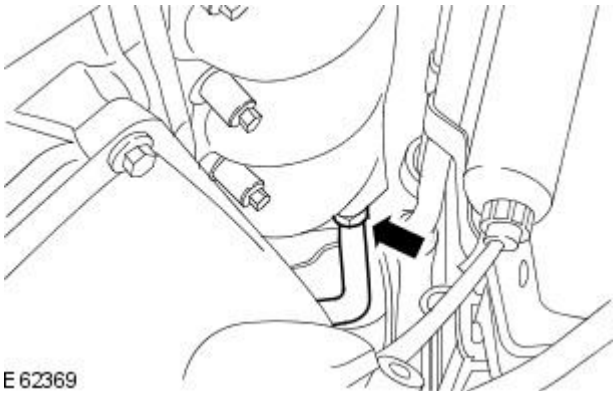


**7.** Disconnect the secondary air injection (AIR) control valve to exhaust manifold tube from the left-hand exhaust manifold.

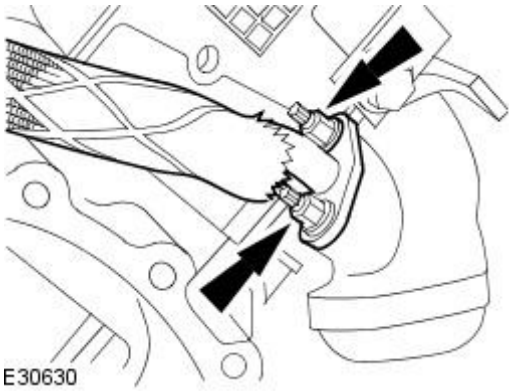


**8.** NOTE: Engine shown removed for clarity.

Detach the exhaust gas recirculation (EGR) valve.

- Remove and discard the retaining nuts and gasket.

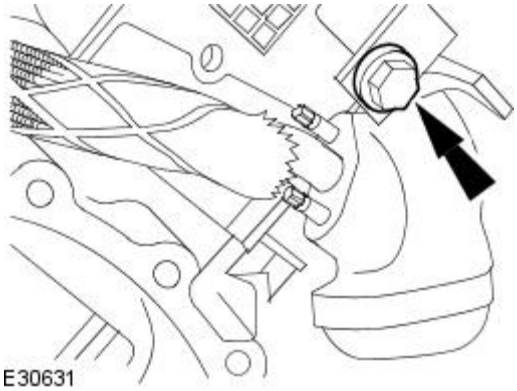


**9.** NOTE: Engine shown removed for clarity.

Remove the right-hand exhaust manifold heat shield/gasket retaining bolt.

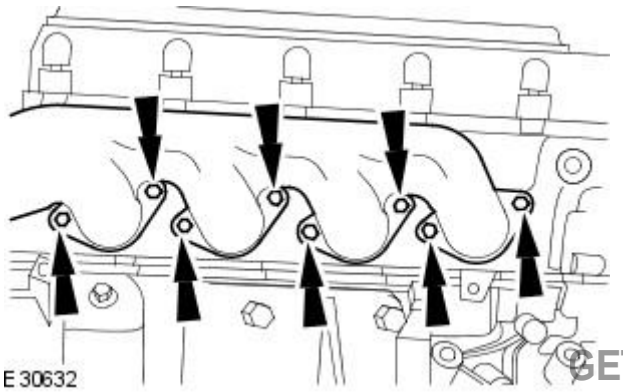


**10.** Remove the exhaust manifold.

- Remove and discard the retaining bolts and heat shield/gasket.

GETtheMANUALS.org

## Installation

All vehicles

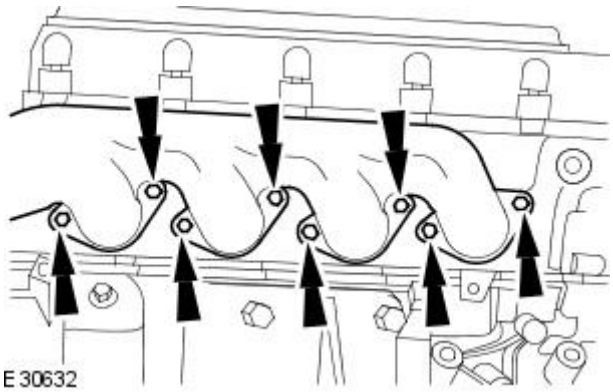


**1.** CAUTION: Make sure that the exhaust manifold and heat shield/gasket is correctly aligned to cylinder head.

Install the exhaust manifold.

- Loosely install new retaining bolts and a new heat shield/gasket.

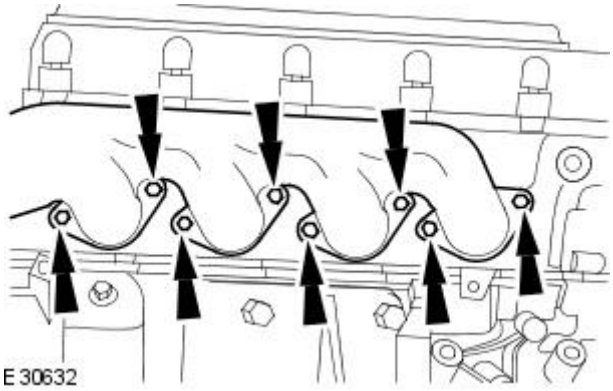


**2.** Tighten the exhaust manifold retaining bolts to 25 Nm.

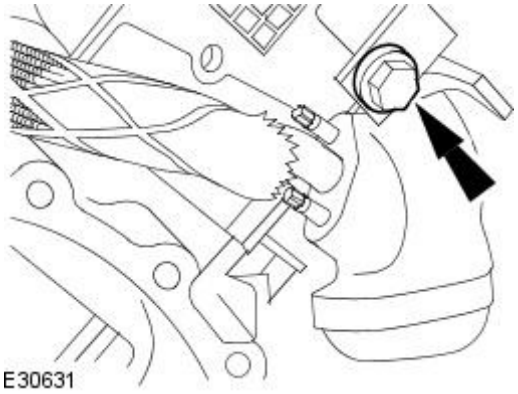


**3.** NOTE: Engine shown removed for clarity.

Install the right-hand exhaust manifold heat shield/gasket retaining bolt.

- Tighten to 50 Nm.

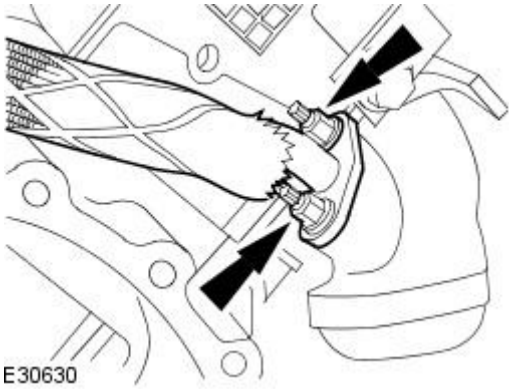


**4.** NOTE: Engine shown removed for clarity.

Attach the EGR valve.

- Install new retaining nuts and a new gasket.
- Tighten to 22 Nm.

GETtheMANUALS.org

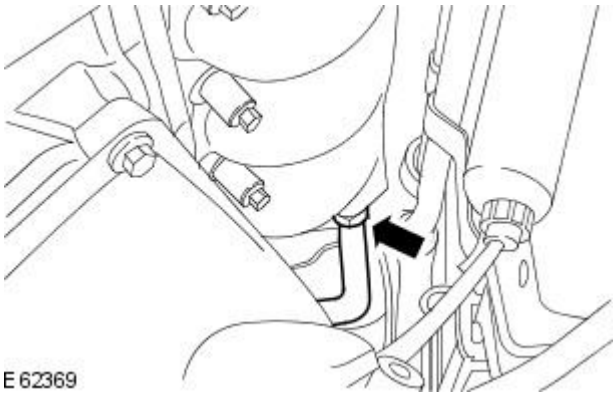


5. Connect the AIR control valve to exhaust manifold tube.
   - Tighten to 35 Nm.

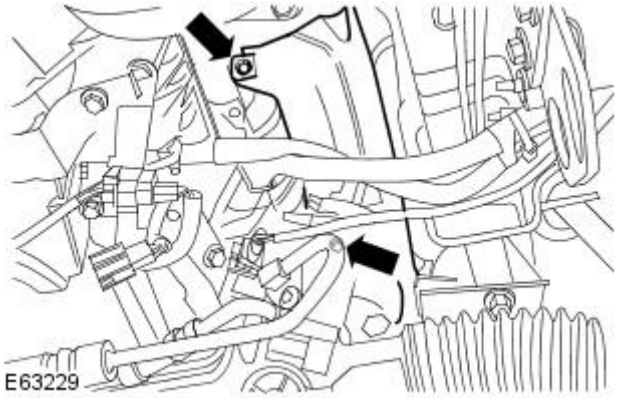


6. Install the right-hand exhaust manifold heat shield
   - Tighten to 3 Nm.

Right-hand drive vehicles

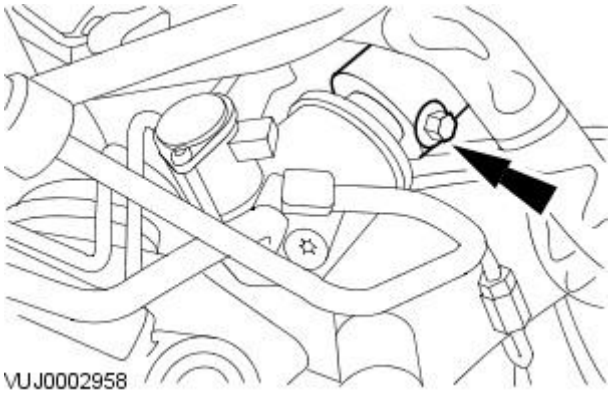


7. Install the steering gear coupling.
   - Tighten the steering gear coupling lower pinch bolt to 35 Nm.

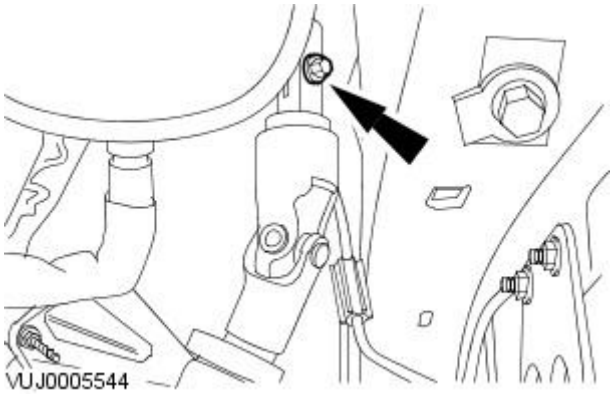


8. Install the steering gear coupling upper pinch bolt.
   - Tighten to 35 Nm.

All vehicles

9. Install the right-hand catalytic converter.
   For additional information, refer to: Catalytic Converter - V8 4.2L Petrol/V8 S/C 4.2L Petrol/2.5L NA V6 - AJV6/3.0L NA V6 - AJ27 (309-00 Exhaust System, Removal and Installation).

GETtheMANUALS.org

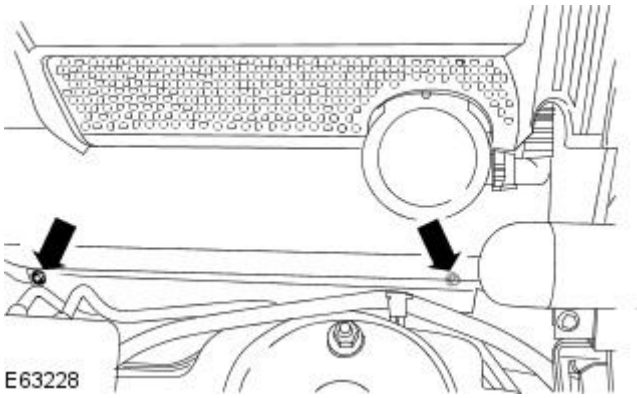


**10.** Install the right-hand exhaust manifold heat shield upper retaining bolts.

- Tighten to 3 Nm.

GETtheMANUALS.org

# Engine - V8 4.2L Petrol/V8 S/C 4.2L Petrol - Flexplate

In-vehicle Repair

## Removal

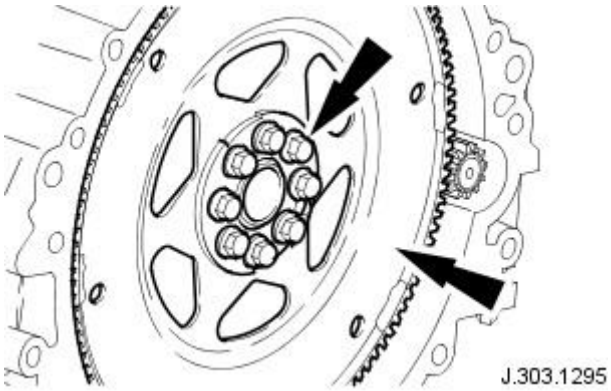


**1.** Remove the automatic transmission. For additional information, refer toFor additional information, refer to: Transmission - V8 4.2L Petrol/V8 S/C 4.2L Petrol (307-01 Automatic Transmission/Transaxle, Removal).

**2.** CAUTION: The bolts can only be used 3 times, mark the bolts with a center punch. If 2 punch marks are visible, discard the bolts.

• NOTE: Prevent the flexplate from rotating.

Remove the flexplate.

- Remove the 8 bolts.

## Installation

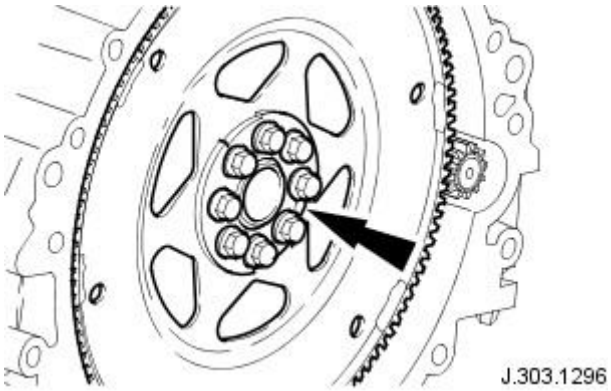


**1.** NOTE: Make sure the crankshaft and flexplate mating faces are clean before installation.

• NOTE: The flexplate will only locate in one position.

• NOTE: Install, but do not tighten, the flexplate retaining bolts.

Install the flexplate.

- Prevent the flexplate from rotating.

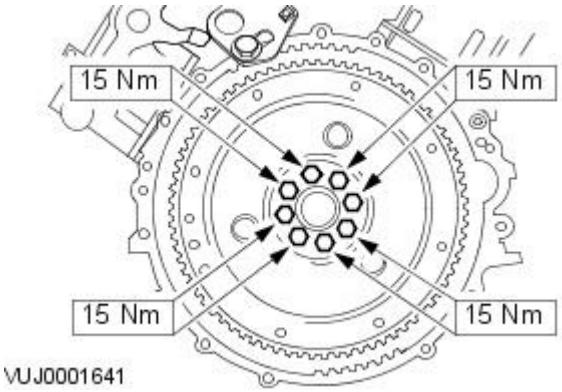


**2.** NOTE: Tighten the retaining bolts working diagonally.

Tighten to 15 Nm.

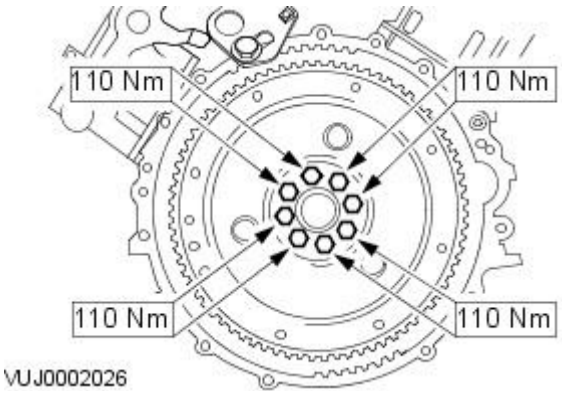


**3.** NOTE: Tighten the retaining bolts working diagonally.

Tighten to 110 Nm.

**4.** Install the automatic transmission. For additional information, refer toFor additional information, refer to: Transmission - V8 4.2L Petrol/V8 S/C 4.2L Petrol (307-01 Automatic Transmission/Transaxle, Installation).

GETtheMANUALS.org

# Engine - V8 4.2L Petrol/V8 S/C 4.2L Petrol - Intake ManifoldVIN Range: M45255->N52047

In-vehicle Repair

## Removal

1. Remove the cowl vent screen.
   For additional information, refer to Section 501-02 Front End Body Panels.
2. Remove the air cleaner outlet pipe. For additional information, refer to Section 303-12A Intake Air Distribution and Filtering / 303-12B Intake Air Distribution and Filtering / 303-12C Intake Air Distribution and Filtering.
3. Remove the engine compartment brace.

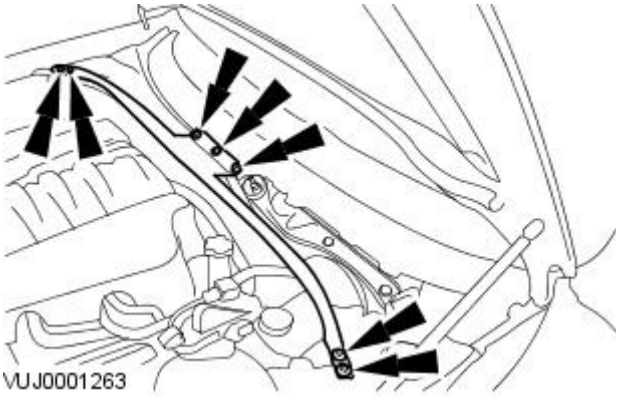


4. NOTE: Left-hand shown, right-hand similar.

   Remove the on-plug coil covers.

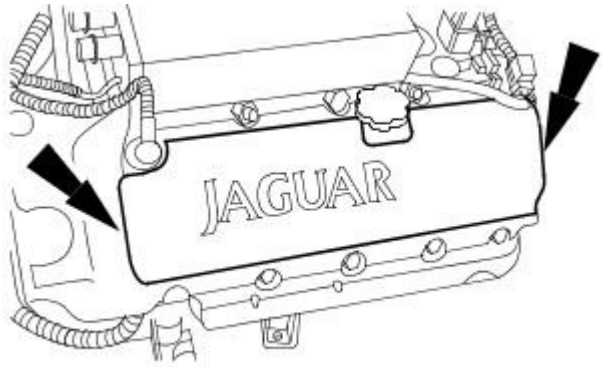


5. Disconnect the throttle potentiometer (TP) electrical connector.

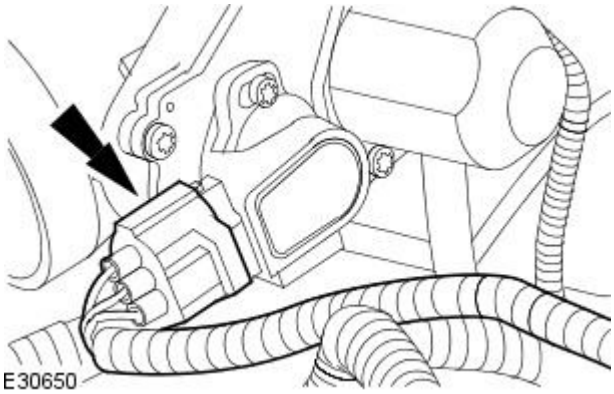


6. Disconnect the throttle motor electrical connector.

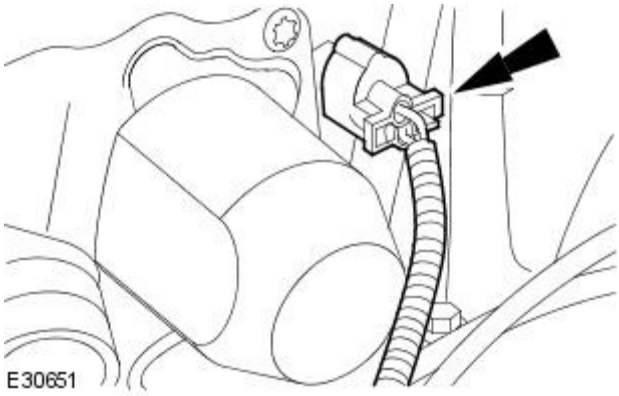


GETtheMANUALS.org

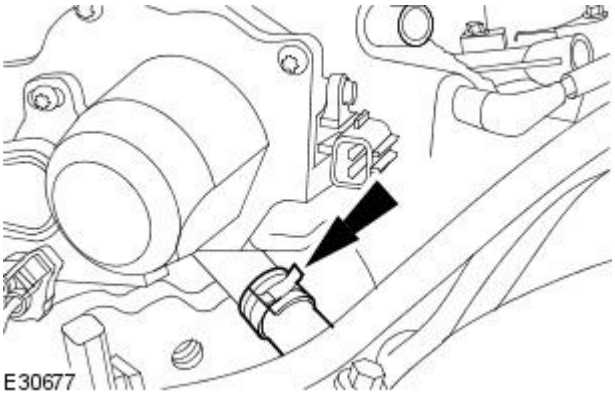


**7.** NOTE: Cap the coolant system hose to minimize coolant loss

Disconnect the throttle body coolant hose.

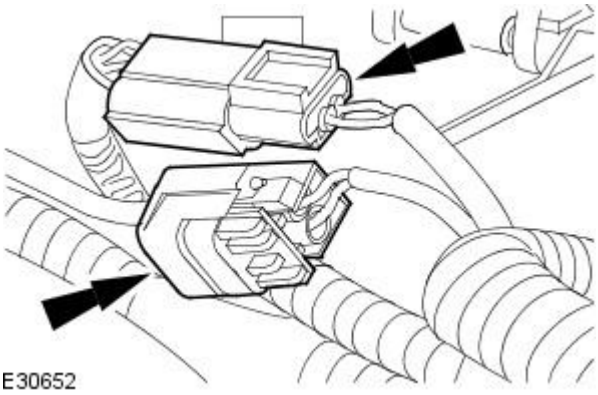


**8.** Disconnect the knock sensors (KS) electrical connectors.

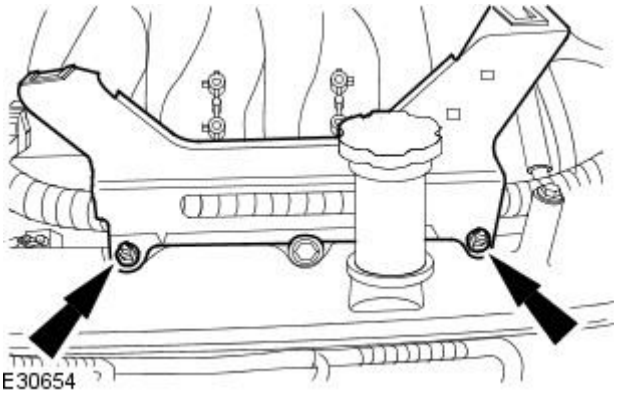


**9.** Remove the left-hand engine cover bracket.

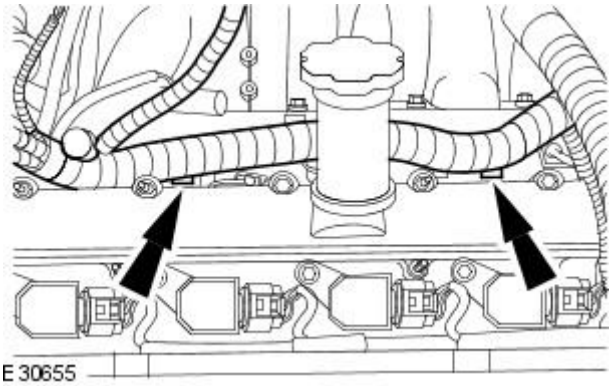


**10.** Detach the left-hand engine wiring harness.

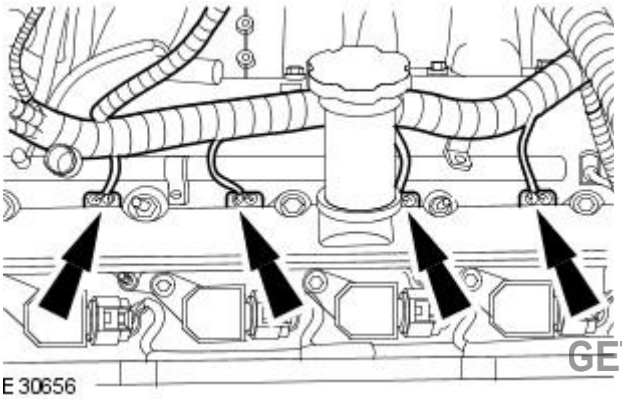


**11.** Disconnect the left-hand fuel injector electrical connectors.

GETtheMANUALS.org

**12.** Detach the fuel line.
For additional information, refer to Section 310-00 Fuel System - General Information.

**13.** Detach the left-hand camshaft position sensor electrical connector.

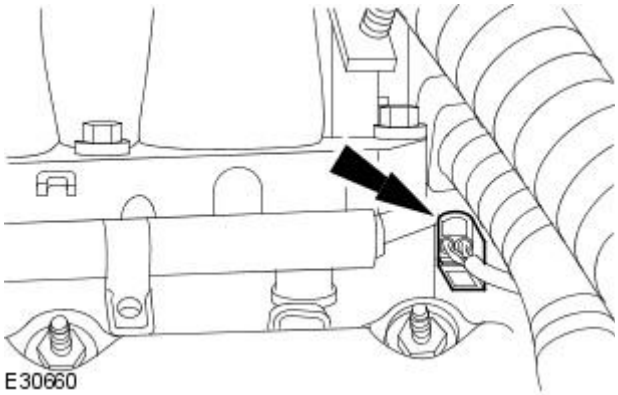


**14.** Disconnect the coolant temperature sensor electrical connector.

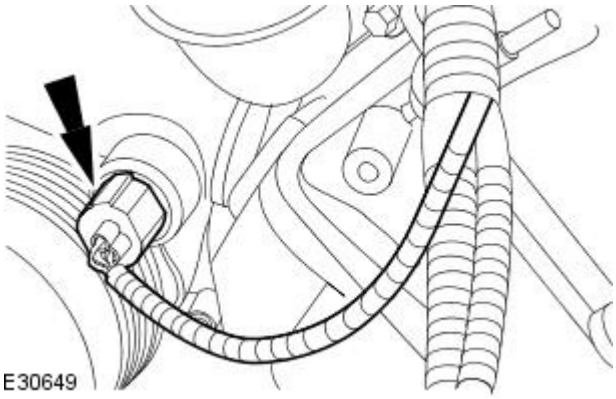


**15.** Remove the right-hand engine cover bracket.

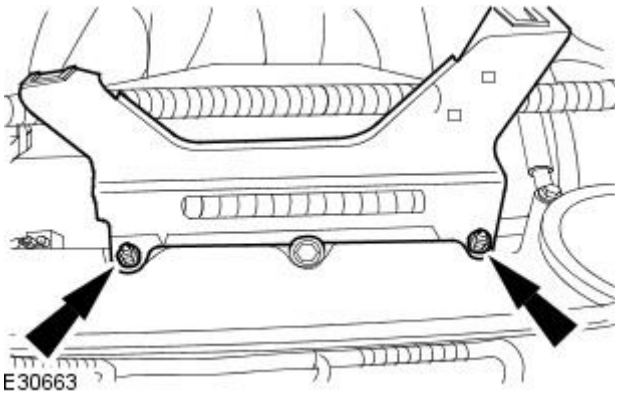


**16.** Remove the positive crankcase ventilation (PCV) valve.

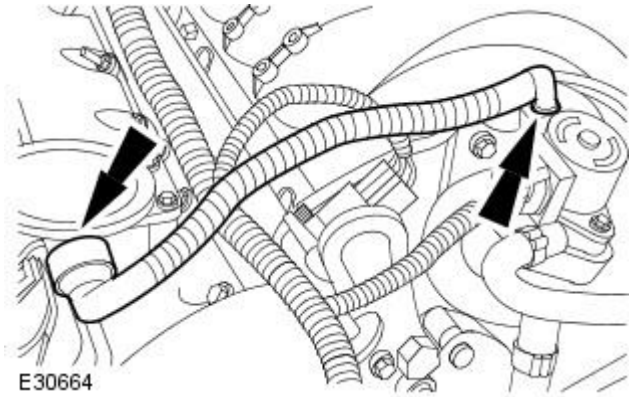


GETtheMANUALS.org

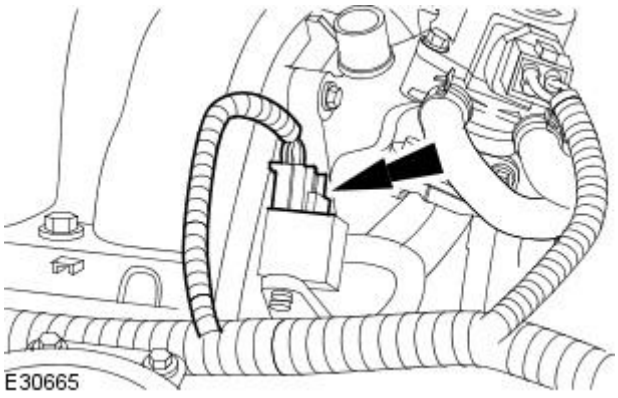


**17.** Disconnect the fuel pressure regulator electrical connector.

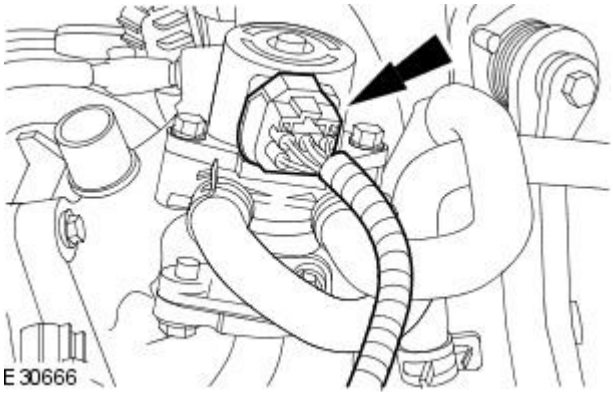


**18.** Disconnect the exhaust gas recirculation (EGR) valve electrical connector.

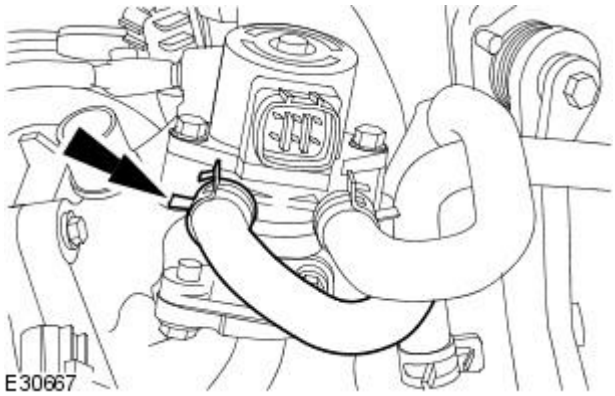


**19.** NOTE: Cap the coolant hose.

Disconnect the exhaust gas recirculation (EGR) valve coolant hose.

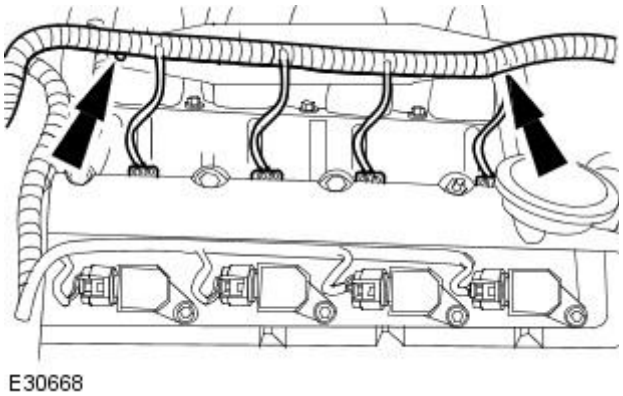


**20.** Detach the right-hand engine wiring harness.

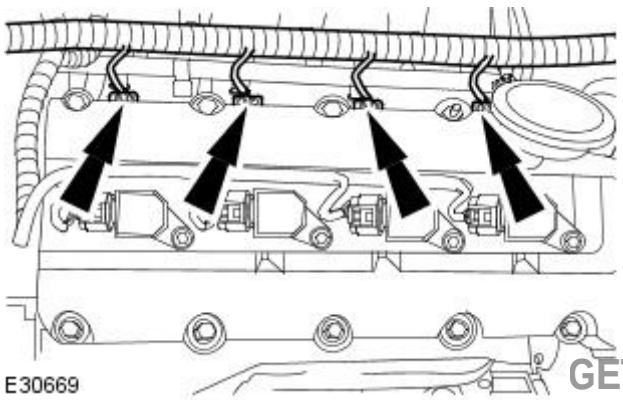


**21.** Disconnect the right-hand fuel injector electrical connectors.

GETtheMANUALS.org

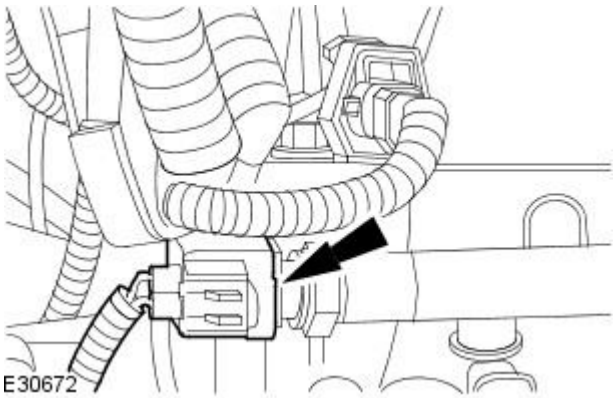


**22.** Disconnect the fuel temperature sensor electrical connector.

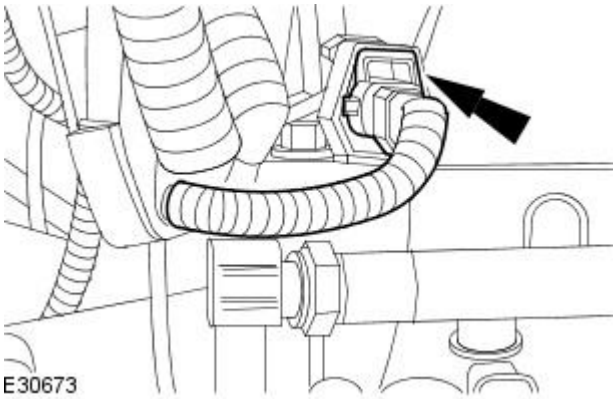


**23.** Disconnect the right-hand camshaft position (CMP) sensor.

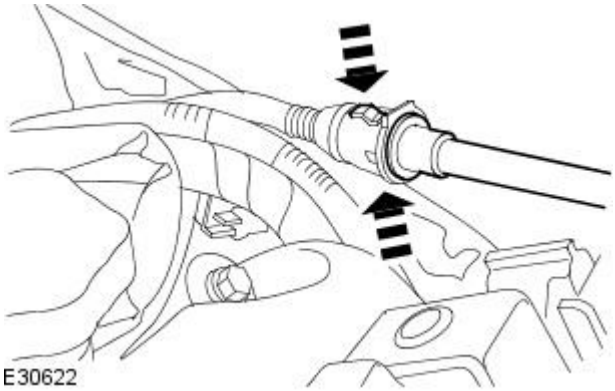


**24.** Detach the brake booster vacumn pipe.

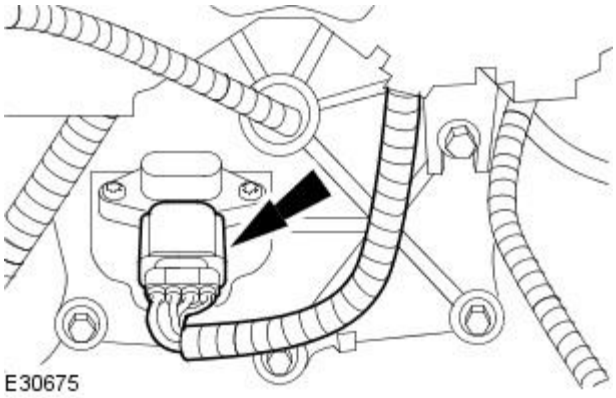


**25.** Disconnect the manifold absolute pressure (MAP) sensor electrical connector.

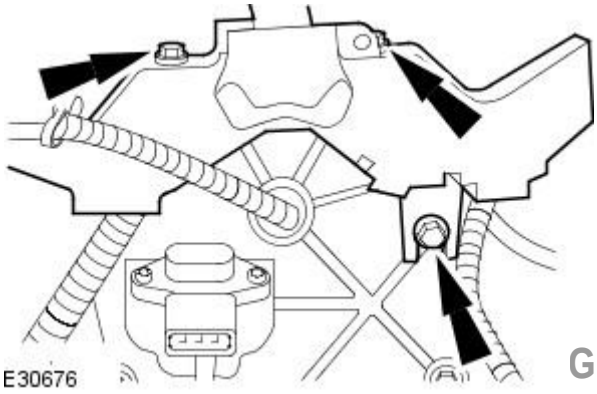


**26.** Detach the engine wiring harness.

GETtheMANUALS.org

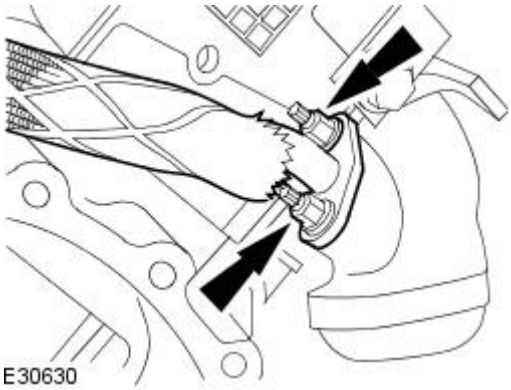


**27.** Detach the exhaust gas recirculation (EGR) valve tube.

- Remove and discard the gasket.

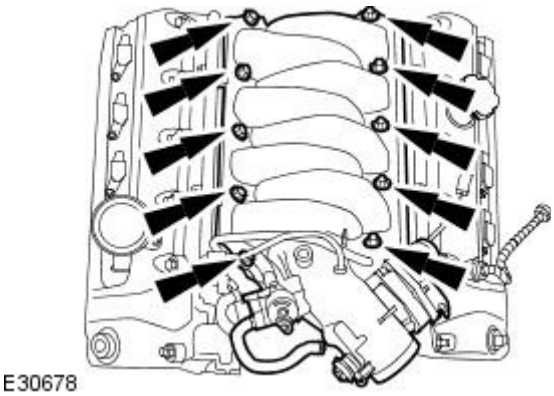


**28.** Remove the intake manifold.

- Remove and discard the gaskets.

## Installation

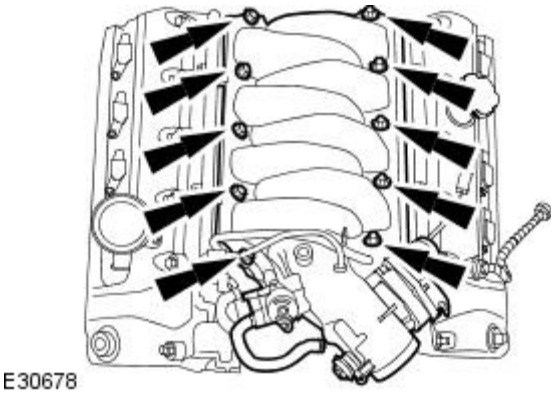


**1.** Install the intake manifold.

- Install new gaskets.
- Tighten to 22 Nm.

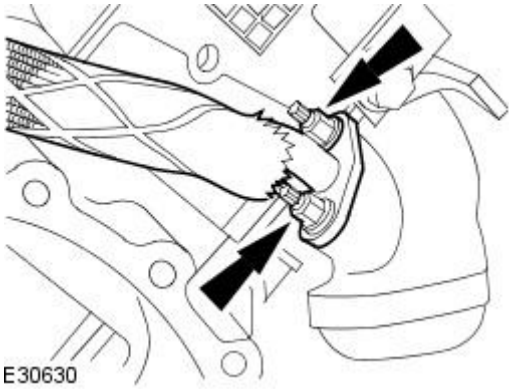


**2.** Attach the exhaust gas recirculation (EGR) valve tube.

- Install a new gasket.

GETtheMANUALS.org

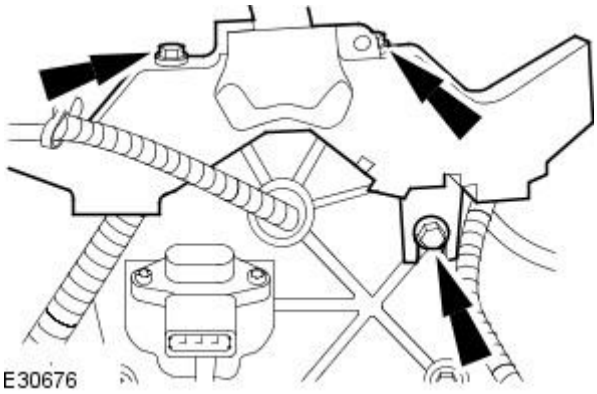


**3.** Attach the engine wiring harness.

- Tighten to 10 Nm.

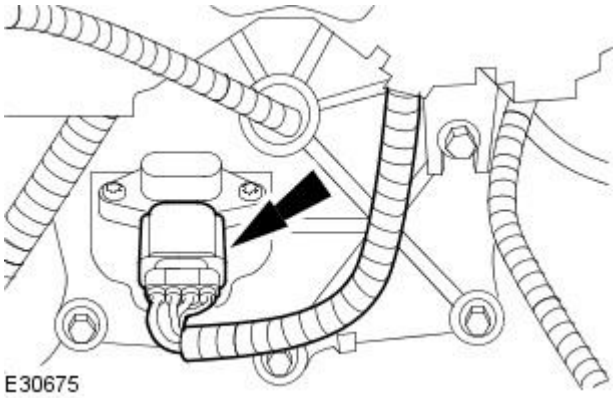


**4.** Connect the manifold absolute pressure (MAP) sensor electrical connector.

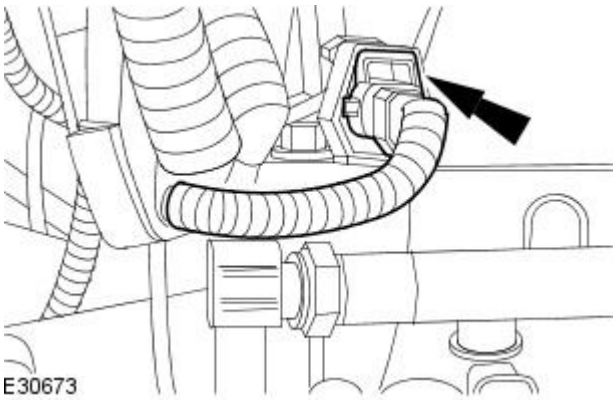


**5.** Connect the right-hand camshaft position (CMP) sensor.

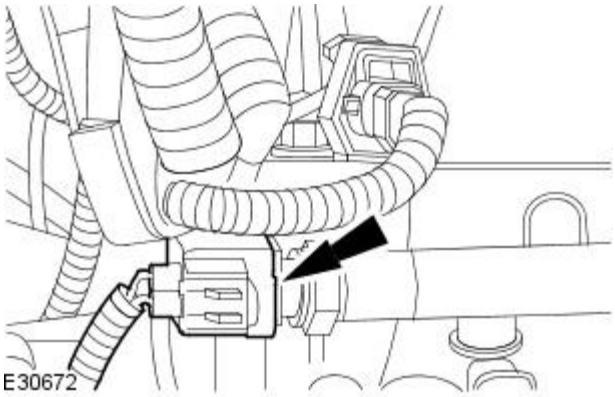


**6.** Connect the fuel temperature sensor electrical connector.

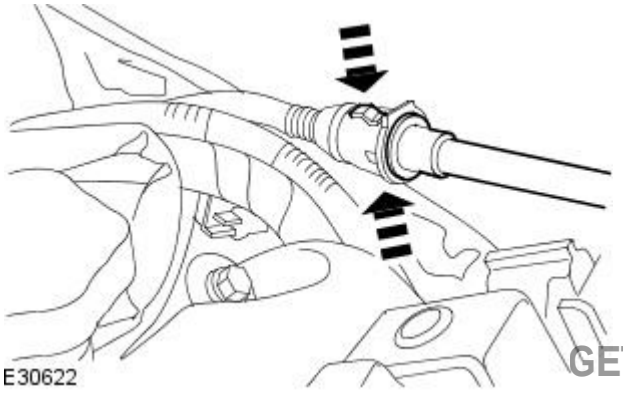


**7.** Attach the brake booster vacumn pipe.

GETtheMANUALS.org

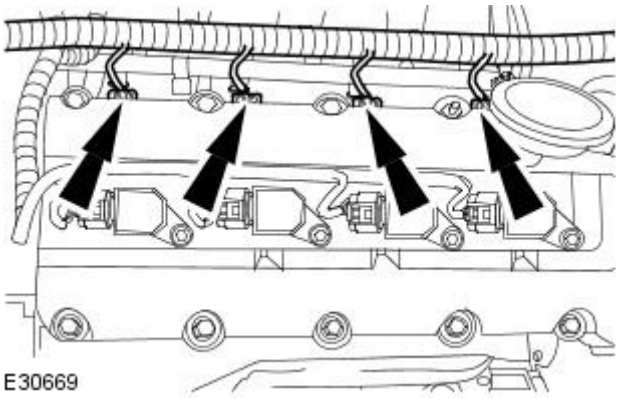


**8.** Connect the right-hand fuel injector electrical connectors.

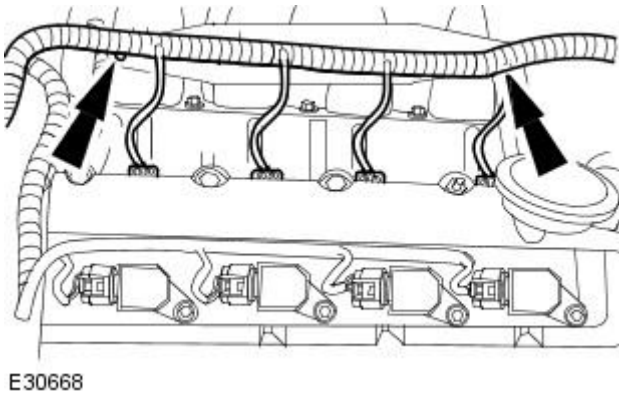


**9.** Attach the right-hand engine wiring harness.

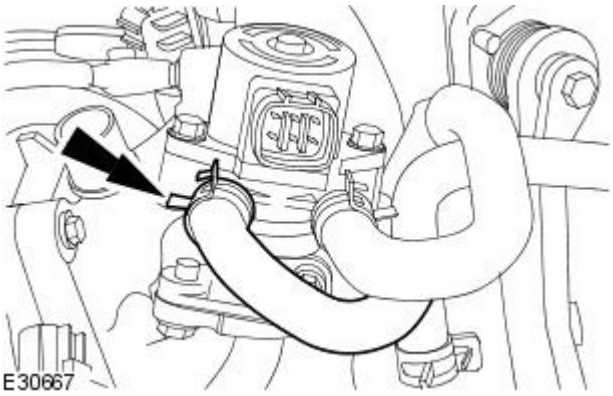


**10.** NOTE: Remove the cap from the coolant hose.

Connect the exhaust gas recirculation (EGR) valve coolant hose.

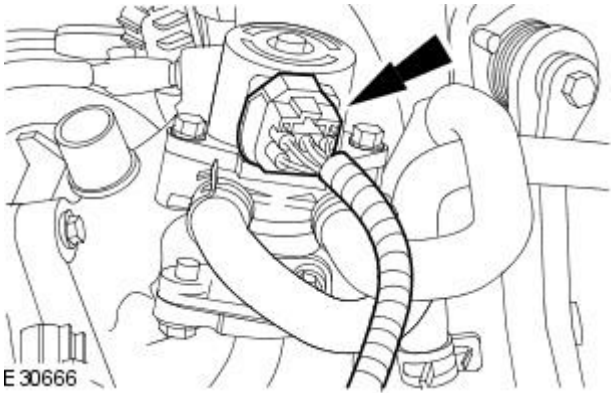


**11.** Connect the exhaust gas recirculation (EGR) valve electrical connector.

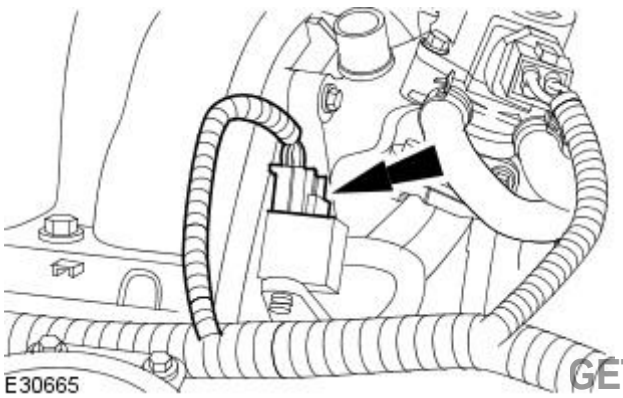


**12.** Connect the fuel pressure regulator electrical connector.

GETtheMANUALS.org

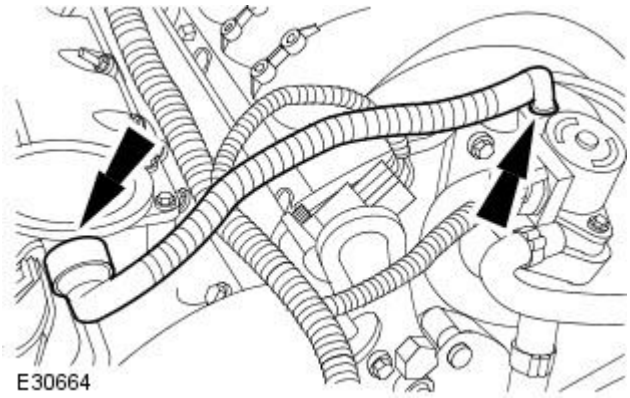


**13.** Install the positive crankcase ventilation (PCV) pipe.

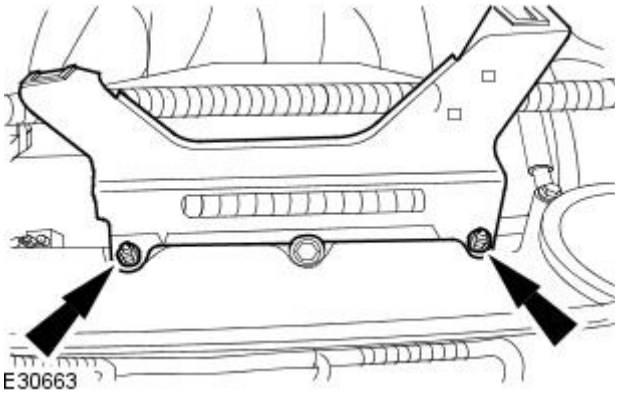


**14.** Install the right-hand engine cover bracket.

- Tighten to 6 Nm.

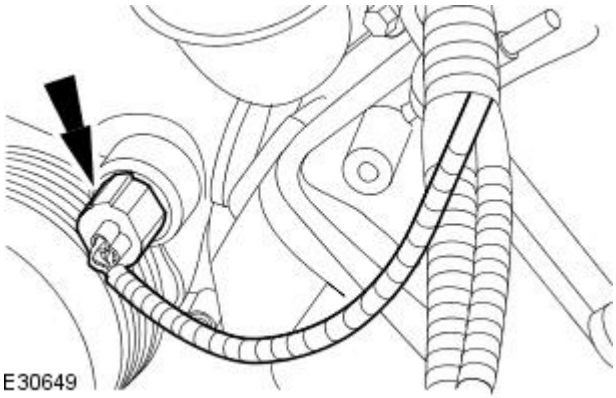


**15.** Connect the coolant temperature sensor electrical connector.

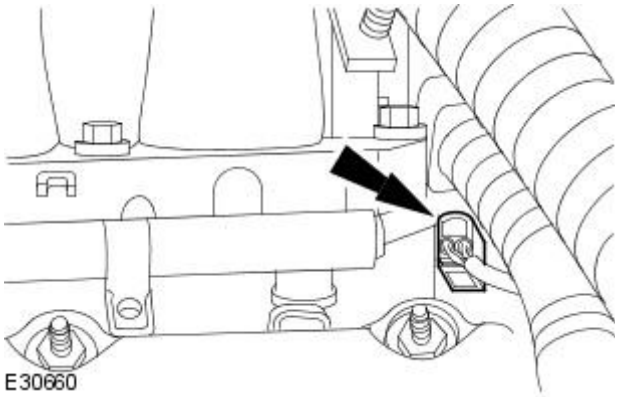


**16.** Attach the left-hand camshaft position sensor electrical connector.

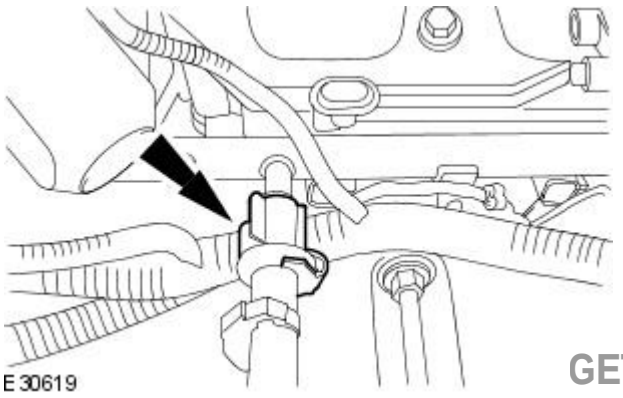


**17.** Connect the fuel line.

- Install new O-ring seals.
- Attach the fuel line retaining clip.

GETtheMANUALS.org

**18.** Connect the left-hand fuel injector electrical connectors.

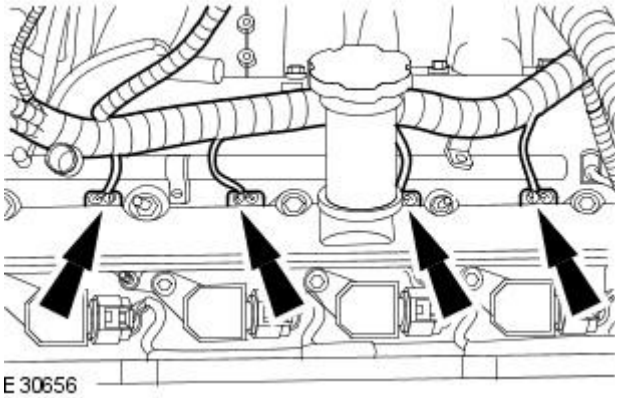


**19.** Attach the left-hand engine wiring harness.

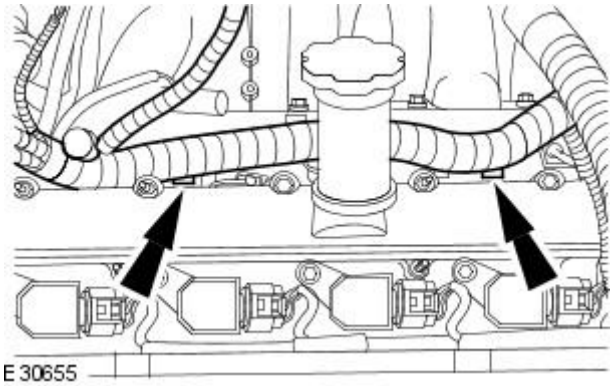


**20.** Install the left-hand engine cover bracket.

- Tighten to 6 Nm.

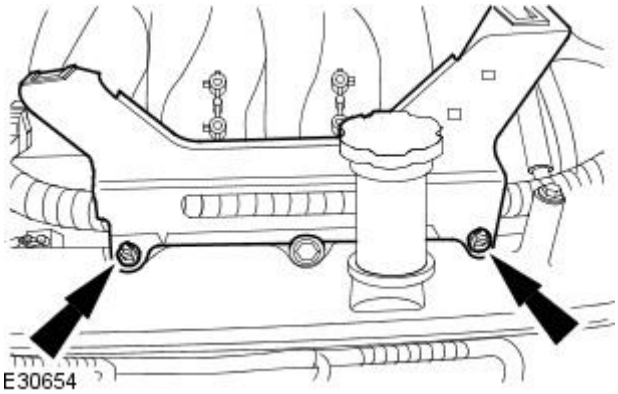


**21.** Connect the knock sensor (KS) electrical connectors.

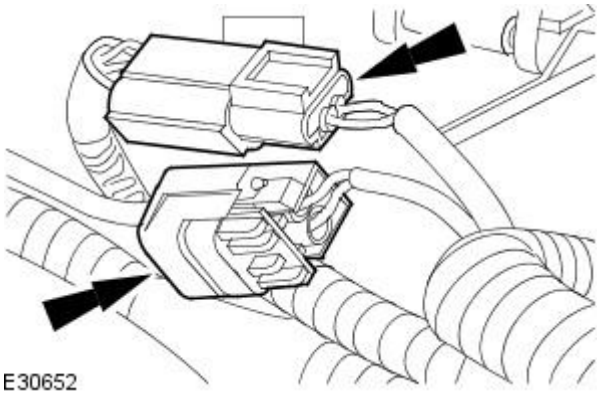


**22.** NOTE: Remove the cap from the coolant hose.

Connect the throttle body coolant hose.

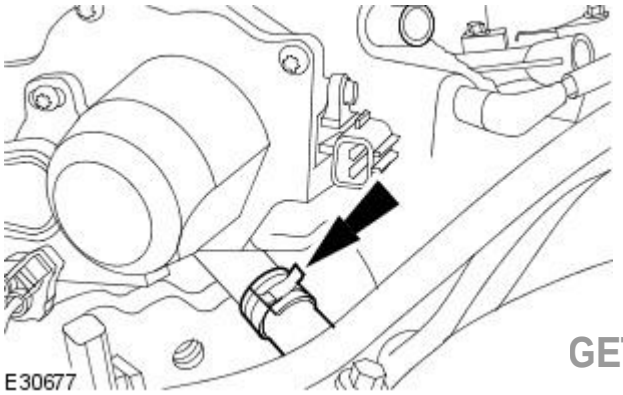


GETtheMANUALS.org

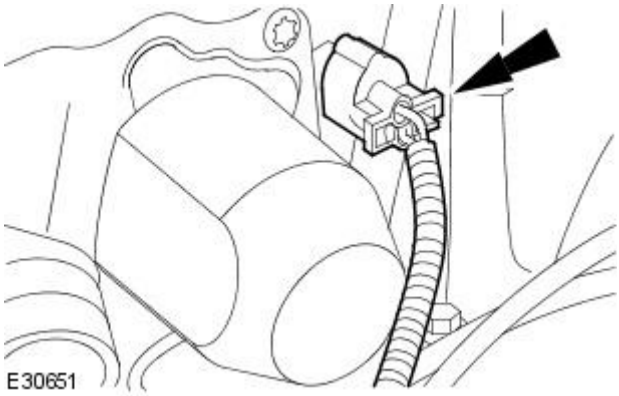


**23.** Connect the throttle motor electrical connector.

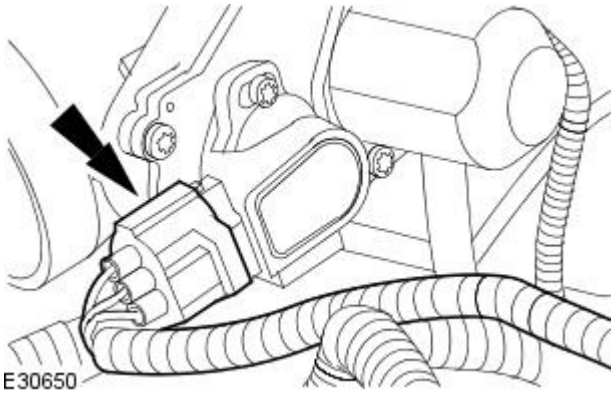


**24.** Connect the throttle potentiometer (TP) electrical connector.

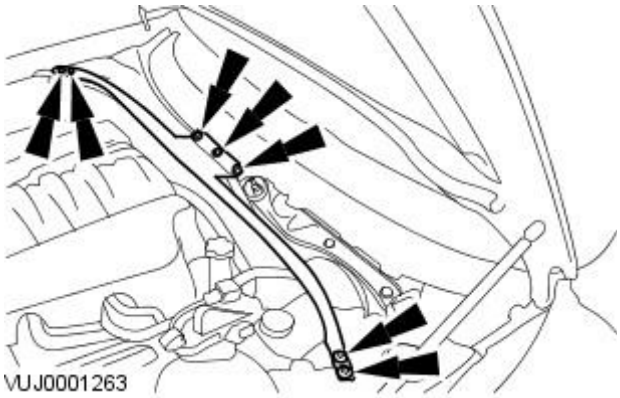


**25.** Install the engine compartment brace.

- Tighten to 18 Nm.

**26.** Install the air cleaner outlet pipe. For additional information, refer to Section 303-12A Intake Air Distribution and Filtering / 303-12B Intake Air Distribution and Filtering / 303-12C Intake Air Distribution and Filtering.

**27.** Install the cowl vent screen.
For additional information, refer to Section 501-02 Front End Body Panels.

**28.** Check and top up the cooling system.

GETtheMANUALS.org

# Engine - V8 4.2L Petrol/V8 S/C 4.2L Petrol - Intake ManifoldVIN Range: N52048->N99999

In-vehicle Repair

## Removal

1. Remove the cowl panel grille.
   For additional information, refer to: Cowl Panel Grille (501-02 Front End Body Panels, Removal and Installation).
2. Remove the air cleaner outlet pipe.
   For additional information, refer to: Air Cleaner Outlet Pipe (303-12B Intake Air Distribution and Filtering - V8 4.2L Petrol/V8 S/C 4.2L Petrol, Removal and Installation).
3. Remove the engine compartment brace.

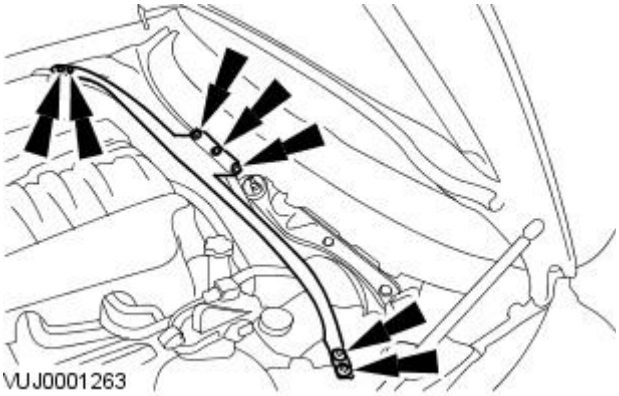


4. Disconnect the supressor electrical connector.

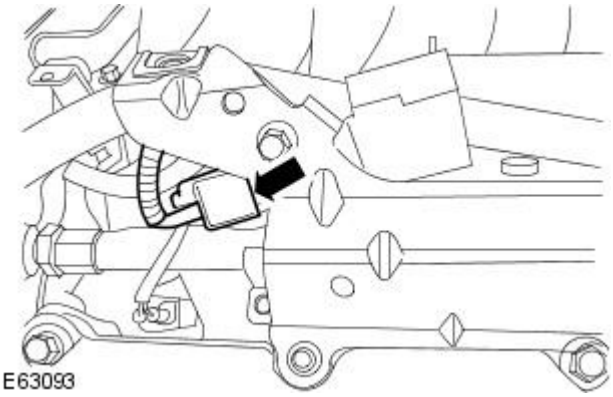


5. Remove the engine cover right-hand bracket.

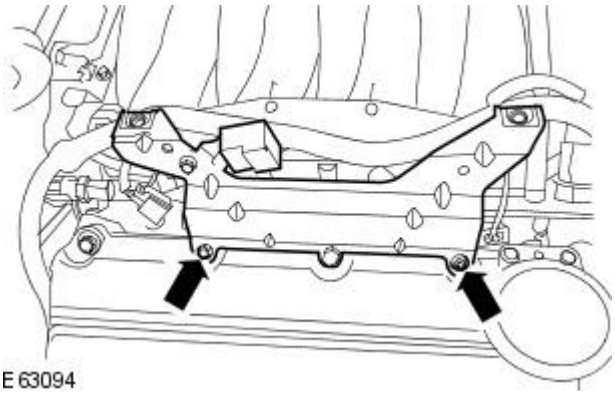


6. Disconnect the fuel pressure regulator electrical connector.

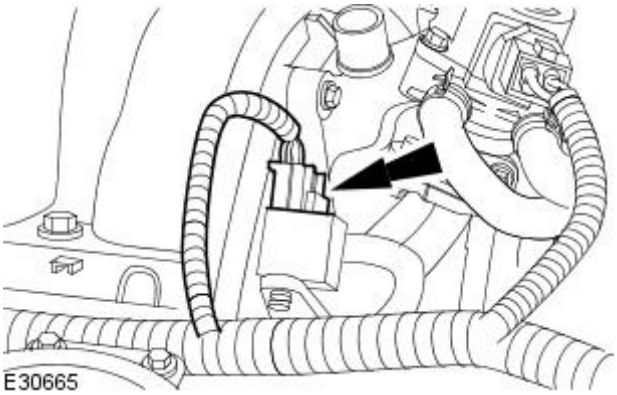


GETtheMANUALS.org

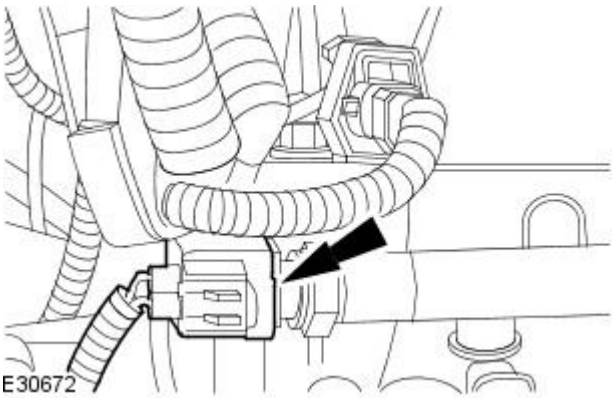


**7.** Disconnect the fuel temperature sensor electrical connector.

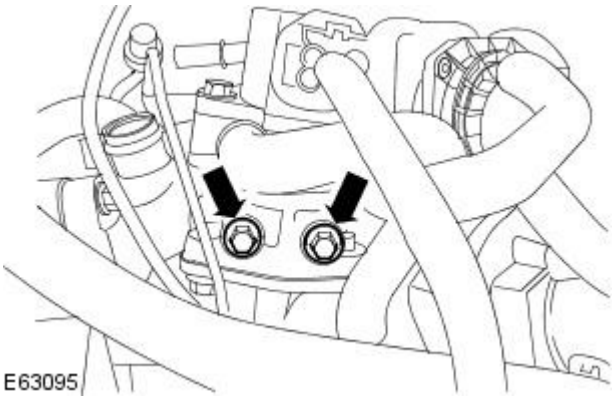


**8.** Remove the exhaust gas recirculation (EGR) valve retaining bolts.

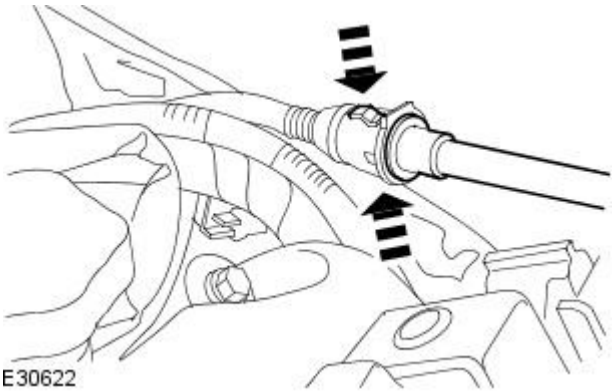


**9.** Disconnect the brake booster vacumn pipe.

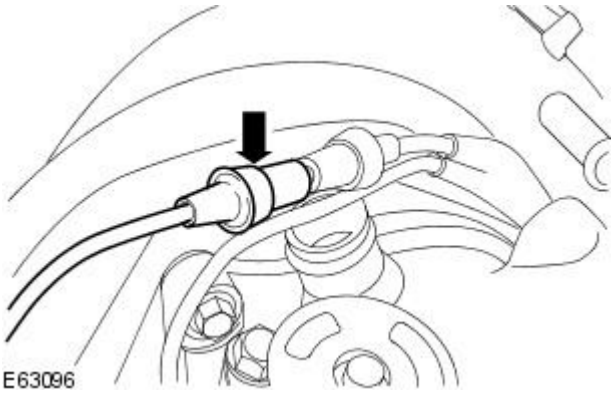


**10.** Disconnect the secondary air injection (AIR) vacuum line.

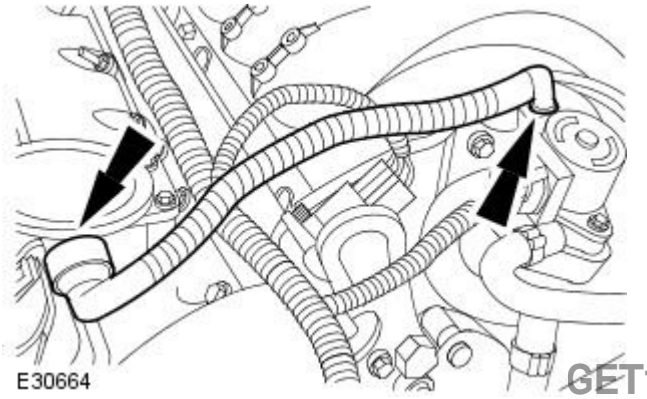


**11.** Remove the positive crankcase ventilation (PCV) valve.

GETtheMANUALS.org

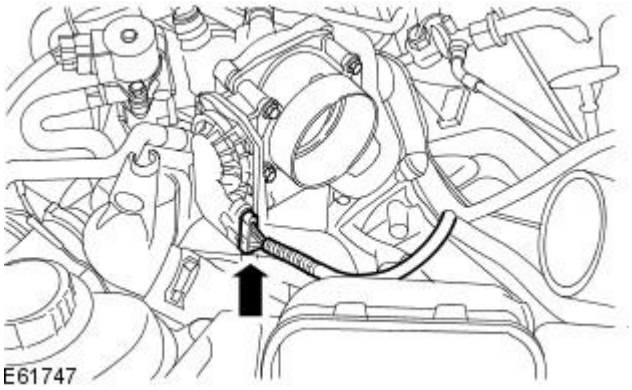


**12.** Disconnect the throttle body electrical connector.

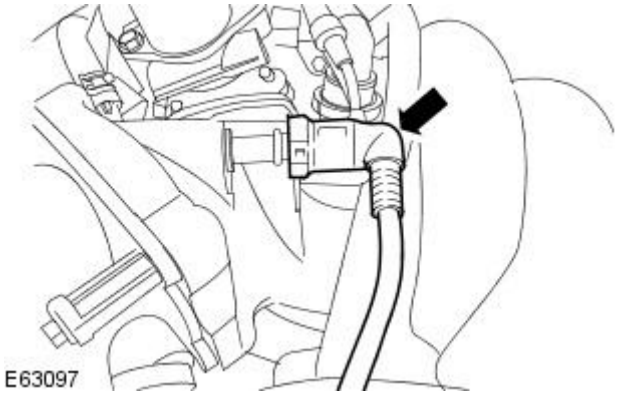


**13.** Disconnect the evaporative emission vent hose.

**14.** WARNING: When relieving cooling system pressure, cover the expansion tank cap with a thick cloth to prevent the possibility of scalding. Failure to follow these instructions may result in personal injury.

Remove the coolant expansion tank cap.

**15.** NOTE: Cap the coolant hose to minimize coolant loss.

Disconnect the throttle body coolant hose.

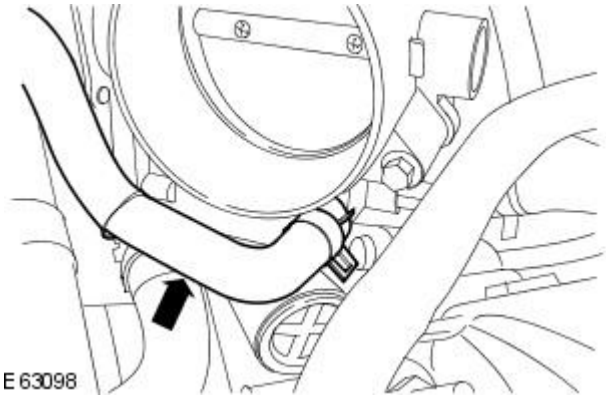


**16.** Disconnect the engine cooolant temperature (ECT) sensor electrical connector.

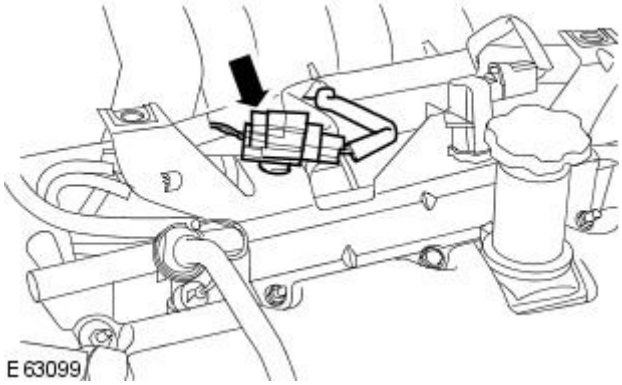


GETtheMANUALS.org

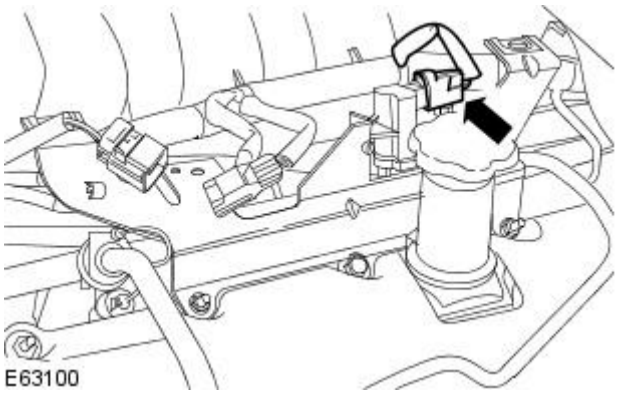


**17.** Disconnect the evaporative emission cannister purge valve electrical connector.

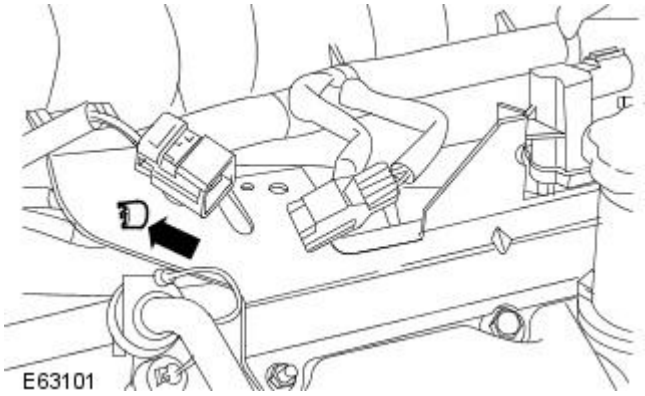


**18.** Detach the knock sensor (KS) electrical connector.

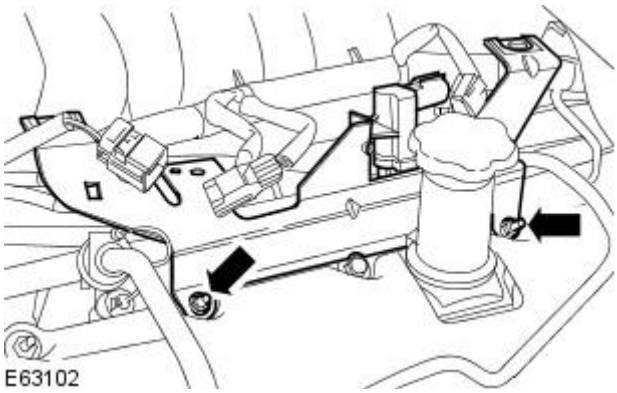


**19.** Reposition the engine cover left-hand bracket.

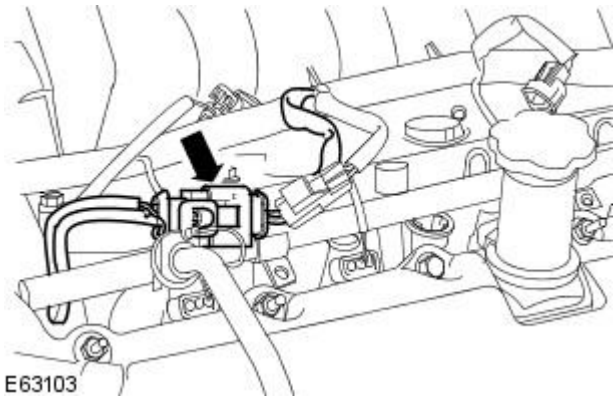


**20.** Disconnect the KS electrical connector.

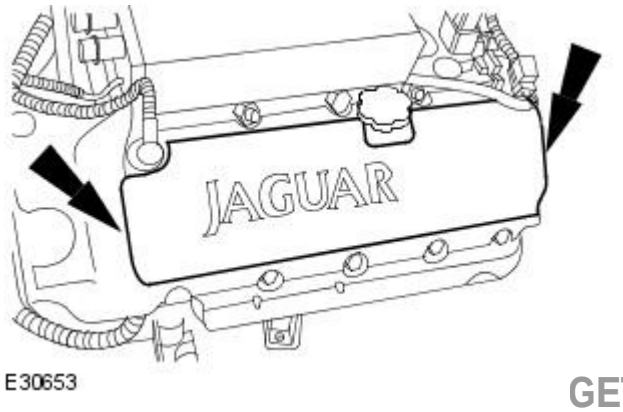


**21.** NOTE: Left-hand shown, right-hand similar.

Remove the on-plug coil covers.

GETtheMANUALS.org

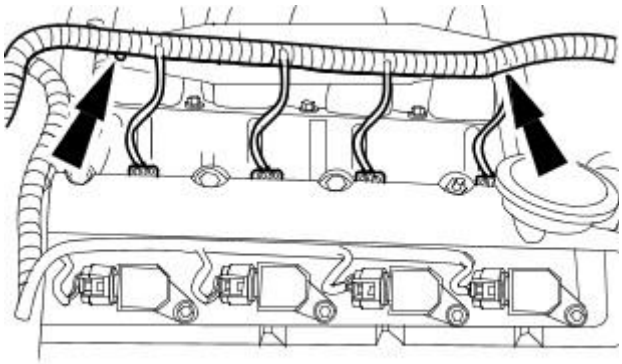
E30668

**22.** NOTE: Right-hand shown, left-hand similar.

Detach the engine wiring harness.

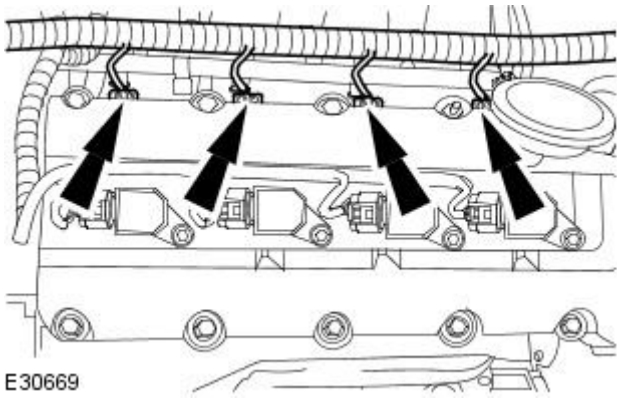
E30669

**23.** NOTE: Right-hand shown, left-hand similar.

Disconnect the fuel injector electrical connectors.

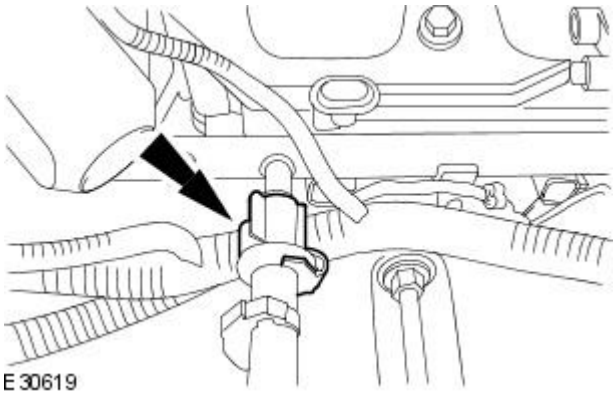
E30619

**24.** Disconnect the fuel line.
For additional information, refer to: Spring Lock Couplings (310-00 Fuel System - General Information, General Procedures).

- Release the retaining clip.
- Remove and discard the O-ring seals.

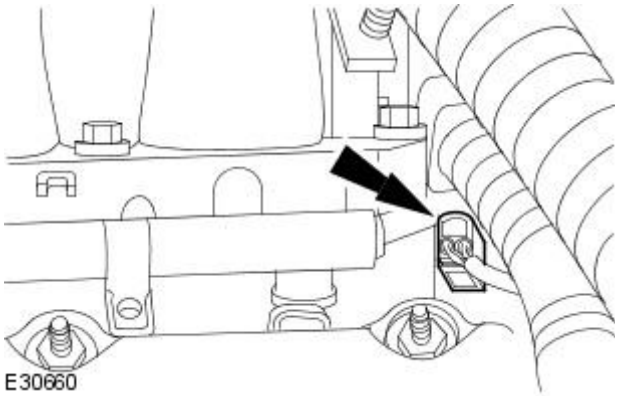
E30660

**25.** Detach the left-hand camshaft position sensor electrical connector.

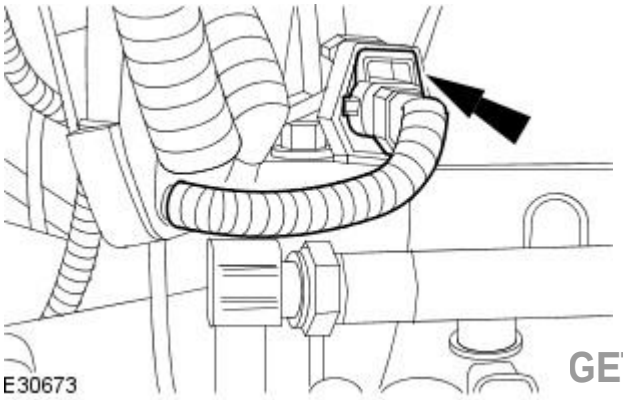
E30673

**26.** Disconnect the right-hand camshaft position (CMP) sensor.

GETtheMANUALS.org

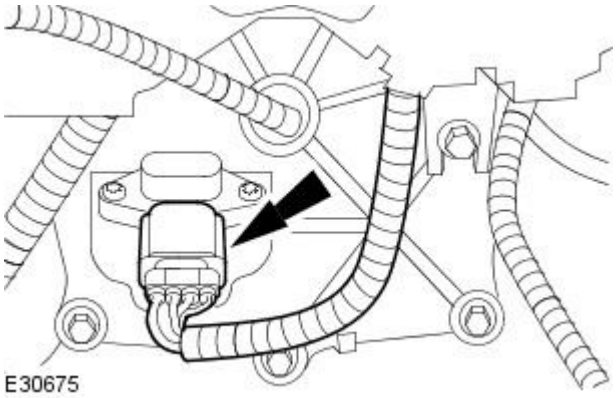


**27.** Disconnect the manifold absolute pressure (MAP) sensor electrical connector.

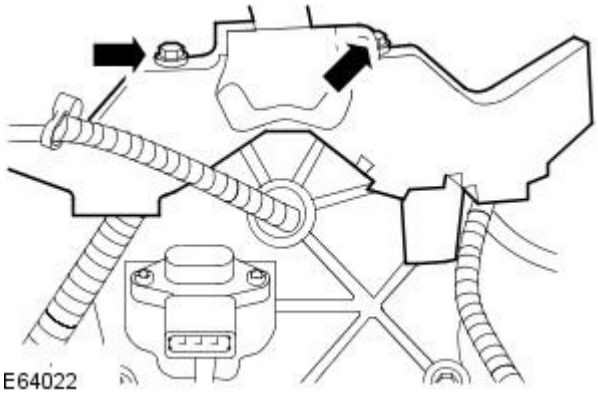


**28.** Detach the engine wiring harness.

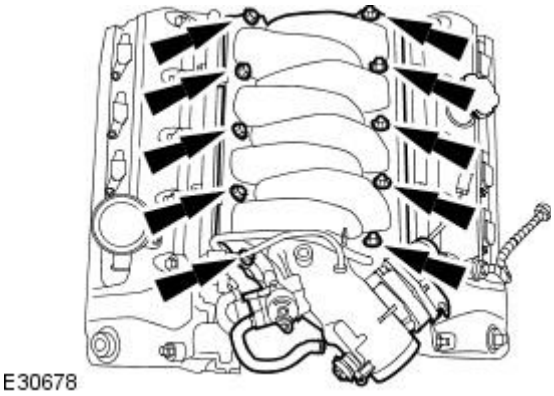


**29.** Remove the intake manifold.

- Remove and discard the gaskets.

## Installation

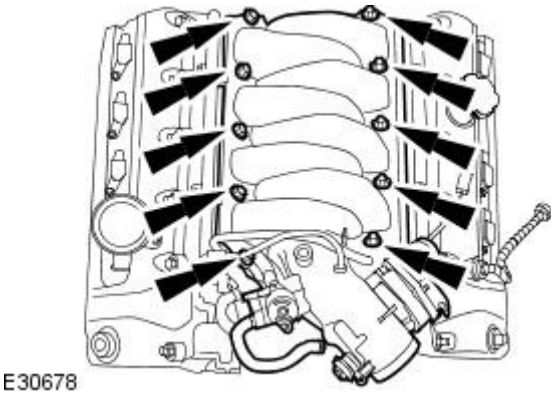


**1.** CAUTION: Make sure that all gasket mating faces are clean and dry.

Install the intake manifold.

- Install new gaskets.
- Tighten to 22 Nm.

GETtheMANUALS.org

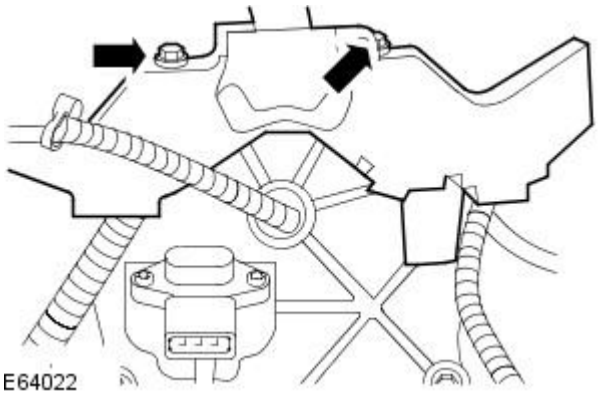


**2.** Attach the engine wiring harness.

- Tighten to 10 Nm.

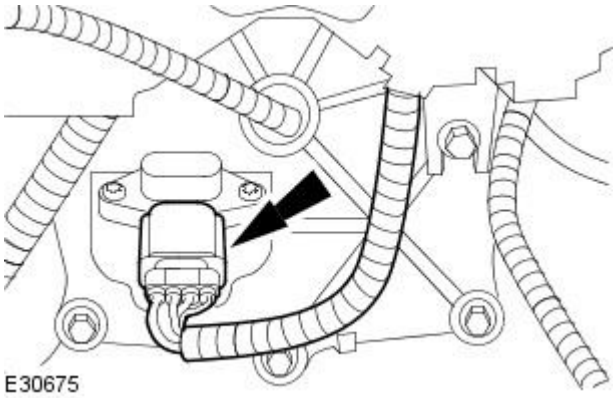


**3.** Connect the MAP sensor electrical connector.

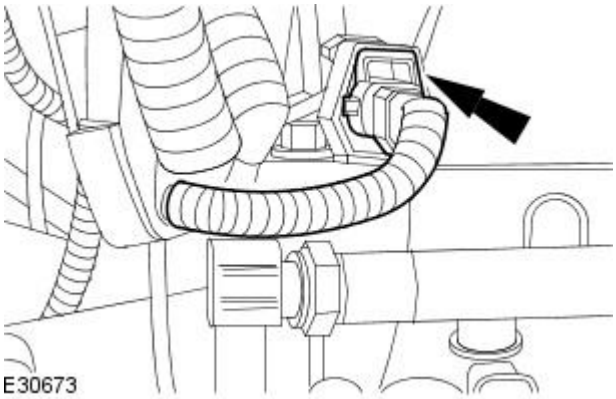


**4.** Connect the right-hand CMP sensor.

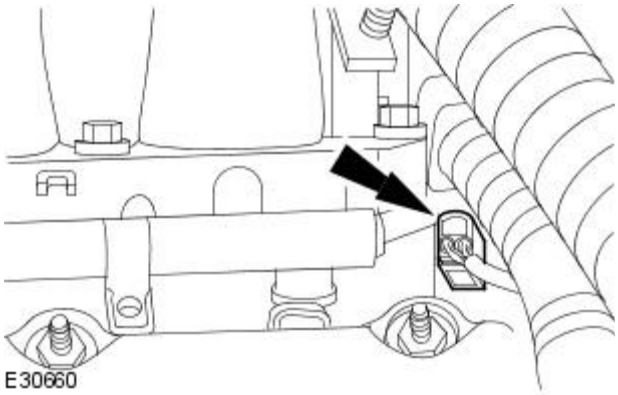


**5.** Attach the left-hand CMP sensor electrical connector.

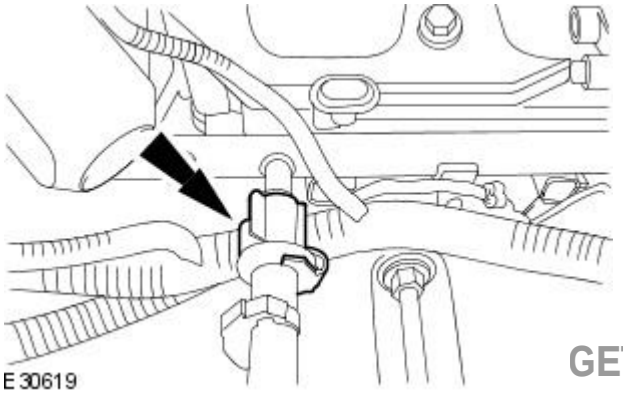


**6.** Connect the fuel line.
For additional information, refer to: Spring Lock Couplings (310-00 Fuel System - General Information, General Procedures).

- Install new O-ring seals.
- Secure the retaining clip.

GETtheMANUALS.org

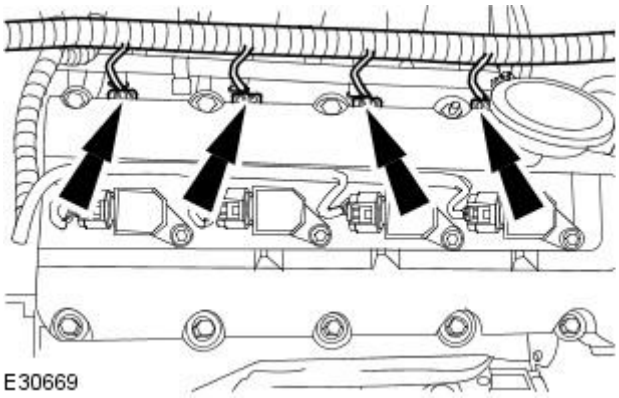
E30669

**7.** NOTE: Right-hand shown, left-hand similar.

Connect the fuel injector electrical connectors.

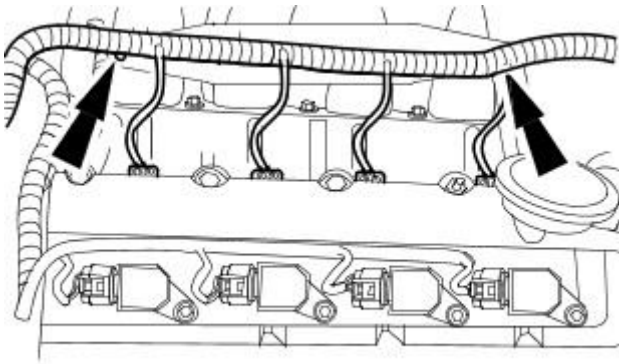
E30668

**8.** NOTE: Right-hand shown, left-hand similar.

Attach the engine wiring harness.

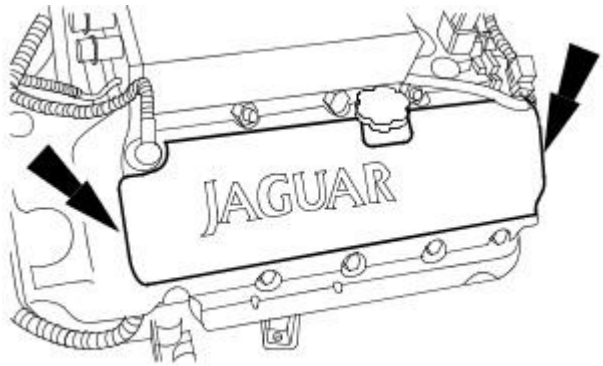

E30653

**9.** NOTE: Left-hand shown, right-hand similar.

Install the on-plug coil covers.

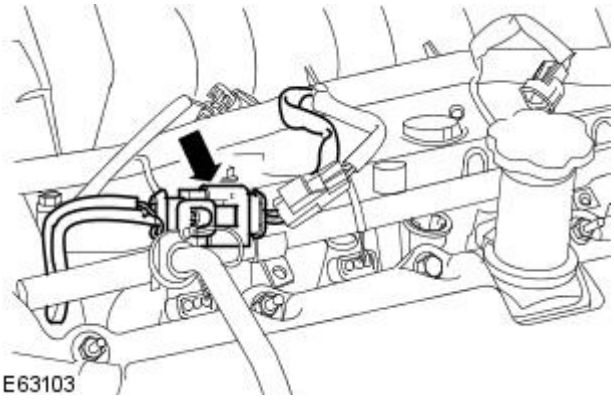
E63103

**10.** Connect the KS electrical connector.

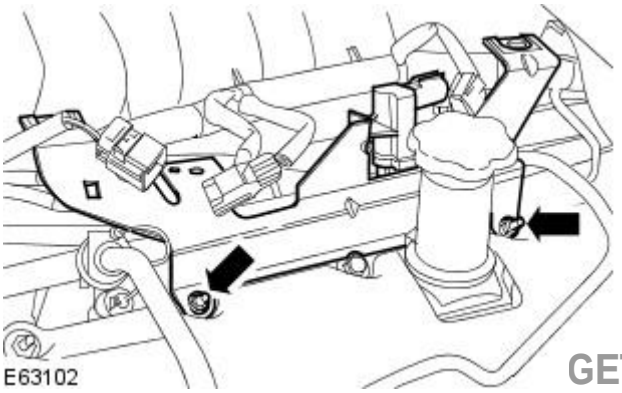
E63102

**11.** Reposition the engine cover left-hand bracket.

- Tighten to 6 Nm.

GETtheMANUALS.org

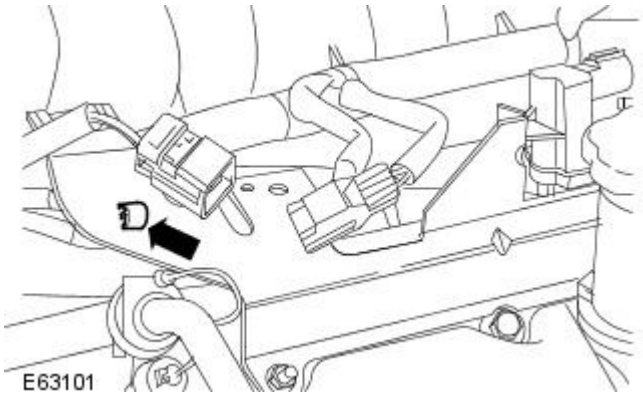


**12.** Attach the KS electrical connector.

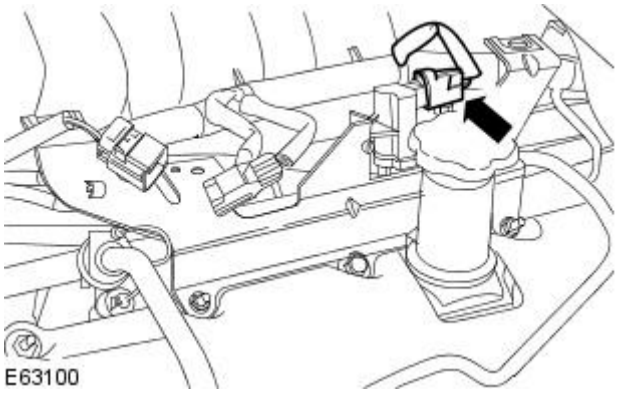


**13.** Connect the evaporative emission cannister purge valve electrical connector.

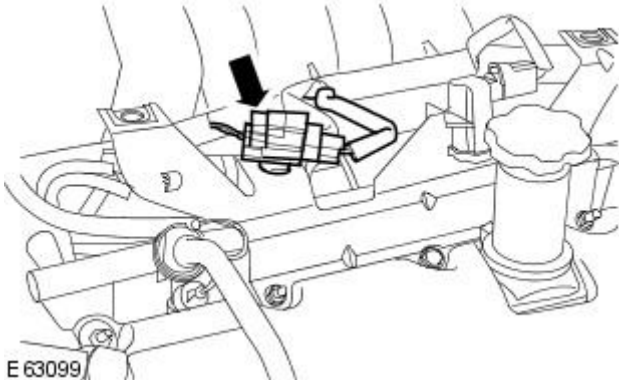


**14.** Connect the ECT sensor electrical connector.

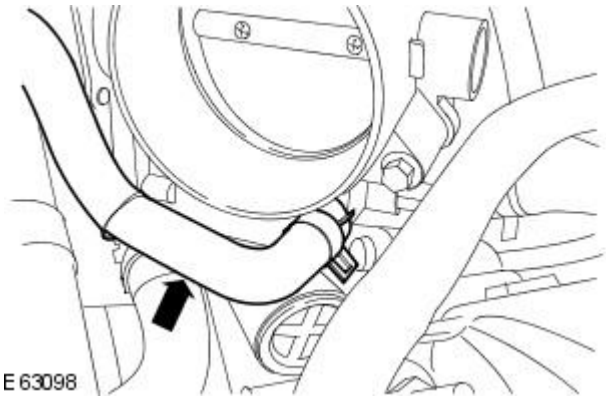


**15.** NOTE: Remove the blanking caps.

Connect the throttle body coolant hose.

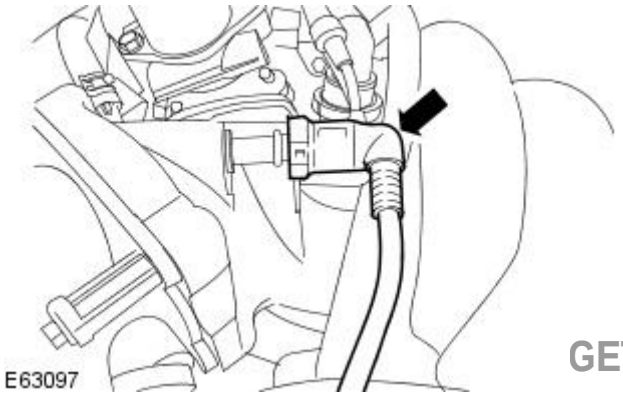


**16.** Install the coolant expansion tank cap.

**17.** Connect the evaporative emission vent hose.

GETtheMANUALS.org

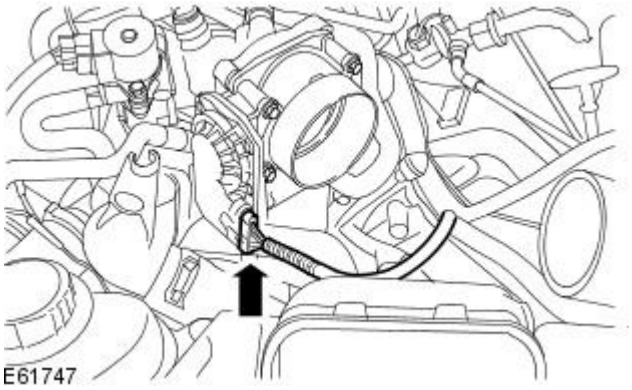


**18.** Connect the throttle body electrical connector.

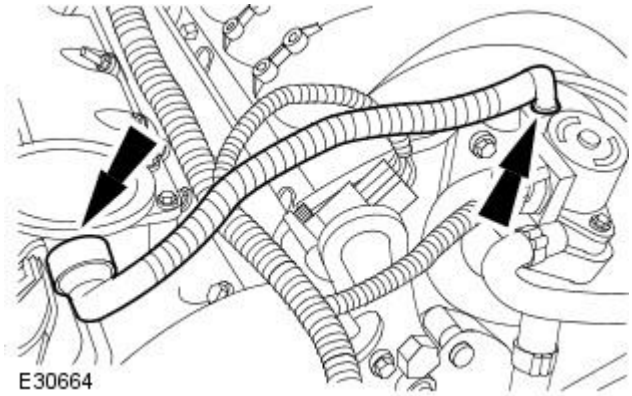


**19.** Install the PCV valve.

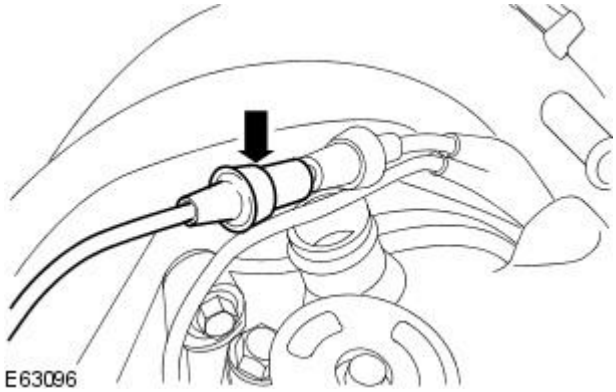


**20.** Connect the AIR vacuum line.

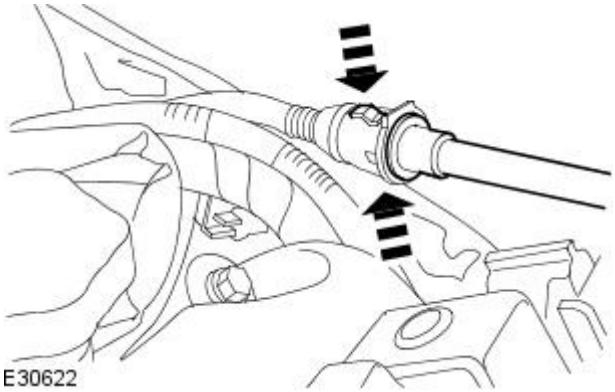


**21.** Connect the brake booster vacumn pipe.

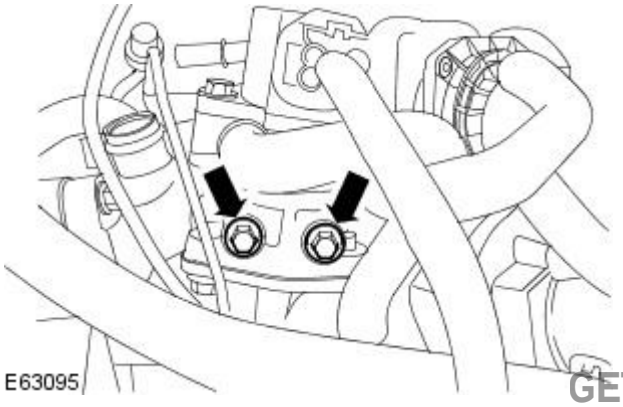


**22.** Install the EGR valve retaining bolts.

- Tighten to 10 Nm.

GETtheMANUALS.org

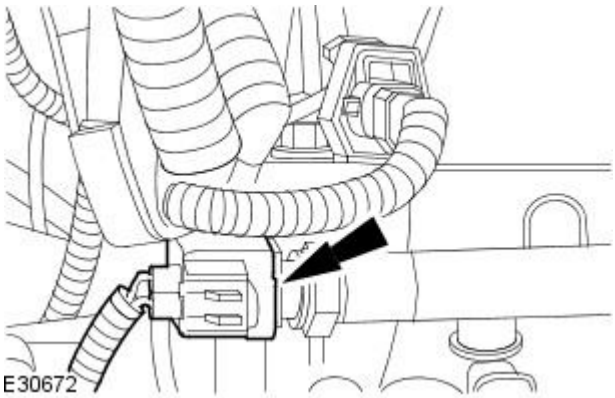


**23.** Connect the fuel temperature sensor electrical connector.

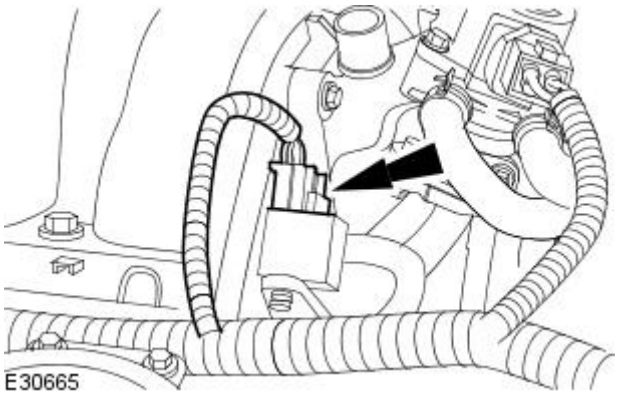


**24.** Connect the fuel pressure regulator electrical connector.

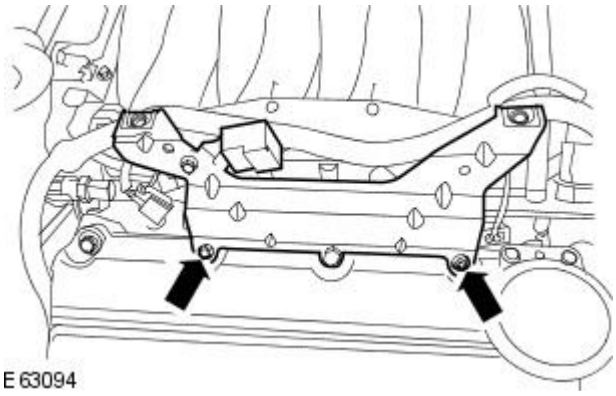


**25.** Install the engine cover right-hand bracket.

- Tighten to 6 Nm.

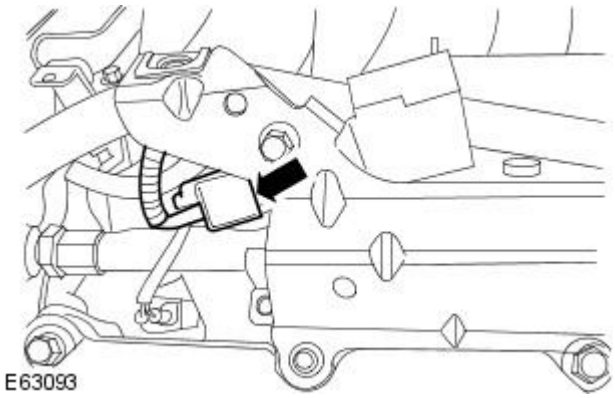


**26.** Connect the supressor electrical connector.

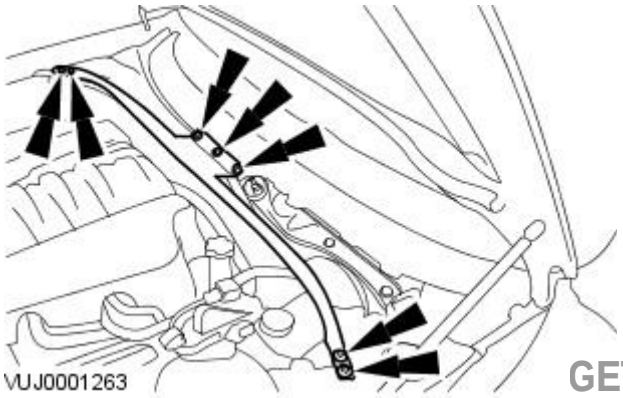


**27.** Install the engine compartment brace.

- Tighten to 18 Nm.

GETtheMANUALS.org

**28.** Install the air cleaner outlet pipe.
For additional information, refer to: Air Cleaner Outlet Pipe (303-12B Intake Air Distribution and Filtering - V8 4.2L Petrol/V8 S/C 4.2L Petrol, Removal and Installation).

**29.** Install the cowl panel grille.
For additional information, refer to: Cowl Panel Grille (501-02 Front End Body Panels, Removal and Installation).

**30.** Check and top up the cooling system.

GETtheMANUALS.org

# Engine - V8 4.2L Petrol/V8 S/C 4.2L Petrol - Oil CoolerVehicles With: Supercharger

In-vehicle Repair

## Removal

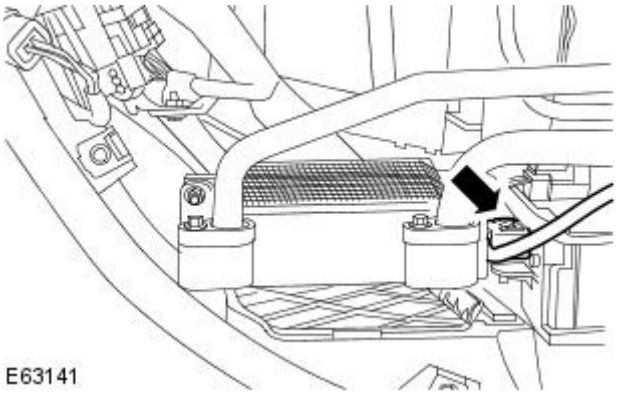


**1.** Remove the radiator splash shield.
For additional information, refer to: Radiator Splash Shield (501-02 Front End Body Panels, Removal and Installation).

**2.** NOTE: Left-hand shown, right-hand similar.

Disconnect the adaptive cruise control (ACC) electrical connector.

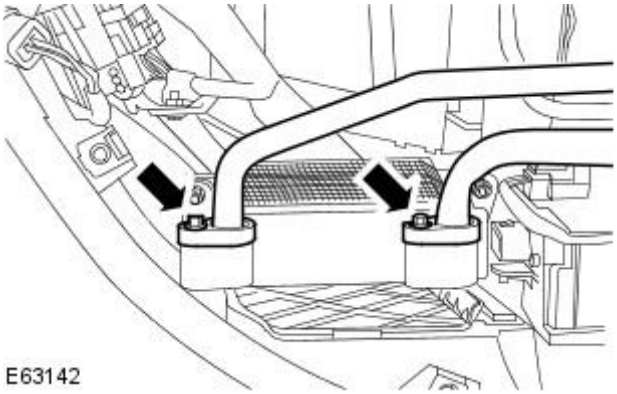


**3.** NOTE: Left-hand shown, right-hand similar.

• NOTE: Place a suitable container underneath the oil cooler to prevent oil spillage.

• NOTE: Install blanking caps to the exposed ports.

Detach the oil cooler lines.

- Remove and discard the oil cooler O-ring seals.

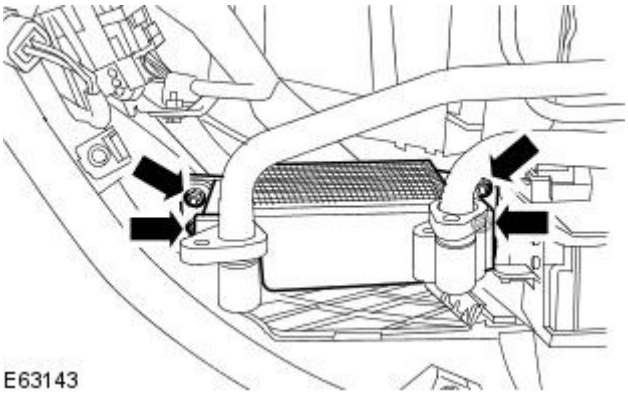


**4.** NOTE: Left-hand shown, right-hand similar.

Remove the oil cooler.

## Installation

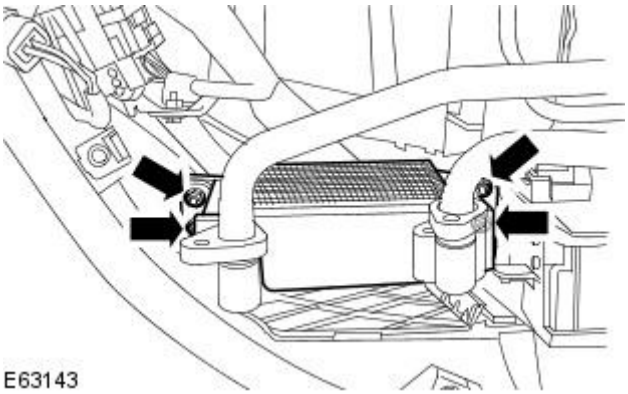


**1.** NOTE: Left-hand shown, right-hand similar.

To install, reverse the removal procedure.

- Tighten to 10 Nm.

GETtheMANUALS.org

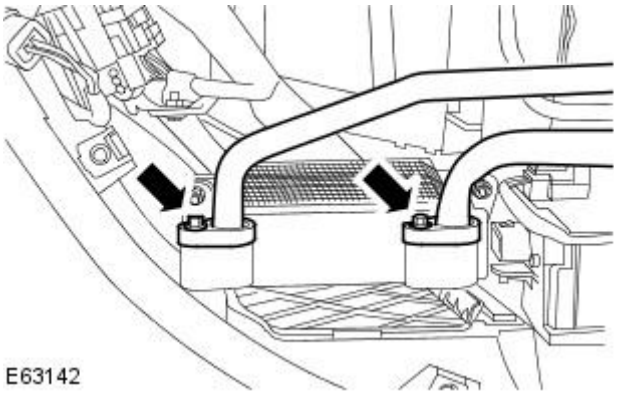


2. NOTE: Left-hand shown, right-hand similar.

   Tighten to 10 Nm.

3. Check and fill the engine oil to the correct level on the oil level indicator.

GETtheMANUALS.org

# Engine - V8 4.2L Petrol / V8 S/C 4.2L Petrol - Oil CoolerVehicles Without: Supercharger

In-vehicle Repair

| Special Tool(s) | |
|---|---|
| 303-752 | Installer/remover, Oil Filter<br><br>303-752 |

## Removal

Vehicles with supercharger

1. Remove the radiator splash shield.
   For additional information, refer to Section 501-02 Front End Body Panels.
2. Detach the oil cooler lines.
   - Remove and discard the oil cooler O rings.

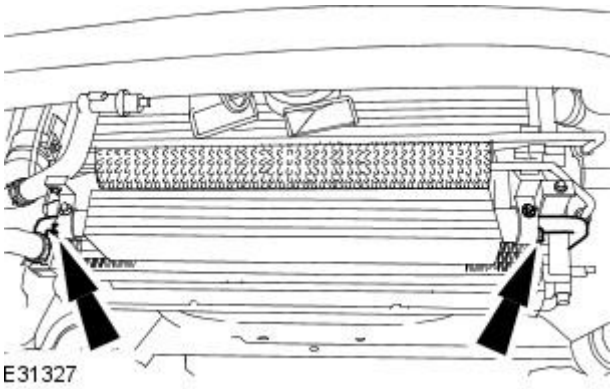
E31327

3. Remove the oil cooler.

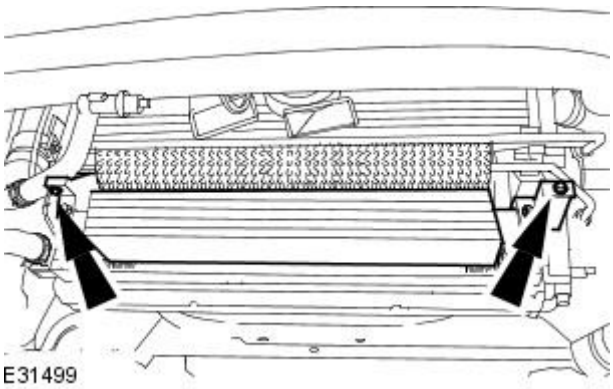
E31499

Vehicles without supercharger

4. Drain the cooling system.For additional information, refer to Section 303-03A Engine Cooling / 303-03B Supercharger Cooling / 303-03C Engine Cooling.
5. Lower the vehicle.
6. Disconnect the oil cooler hose.

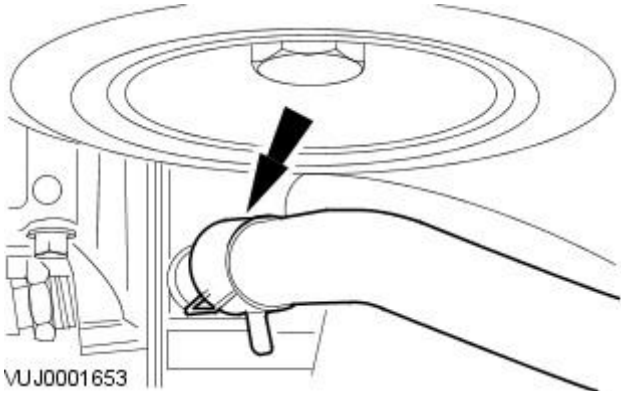
VUJ0001653

7. Raise the vehicle.

GETtheMANUALS.org

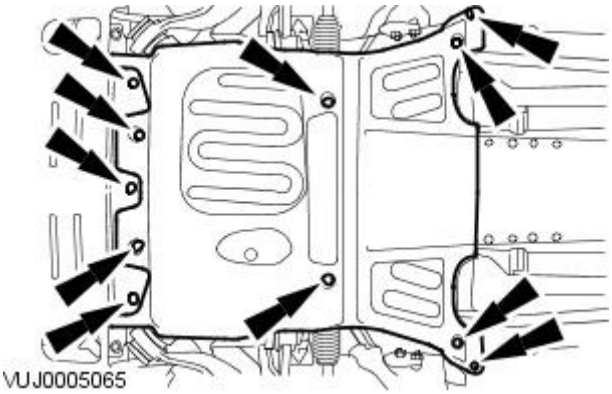


**8.** Remove the air deflector.

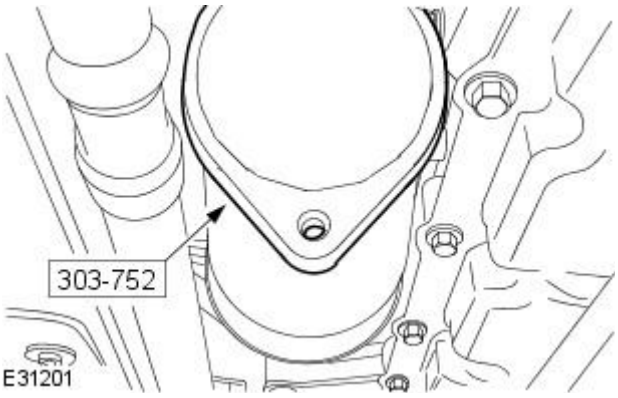


**9.** NOTE: Place a suitable container underneath filter to prevent oil spillage.

Remove and discard the oil filter element.

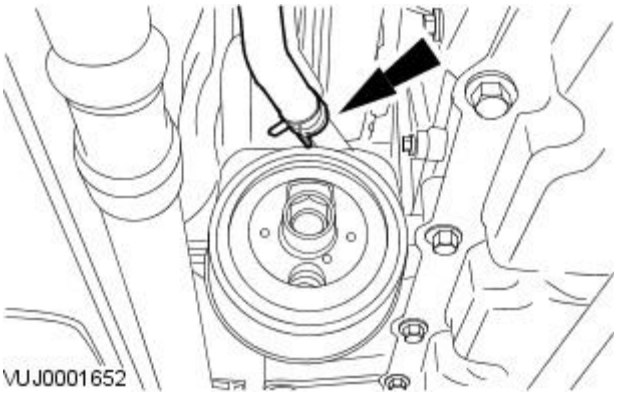


**10.** Disconnect the oil cooler hose.

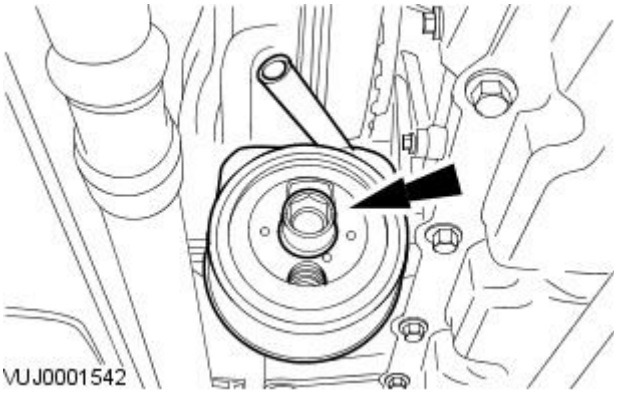


**11.** Remove the oil cooler.

- Remove and discard the O-ring.

## Installation

Vehicles without supercharger

GETtheMANUALS.org

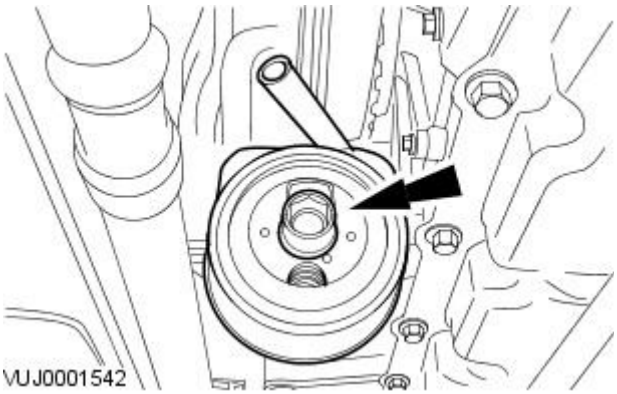


**1.** Install the oil cooler.

- Install a new O-ring seal.
- Tighten to 55 Nm.

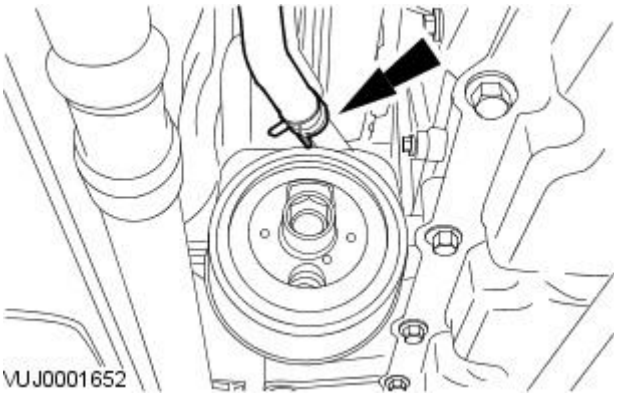


**2.** Connect the oil cooler hose.

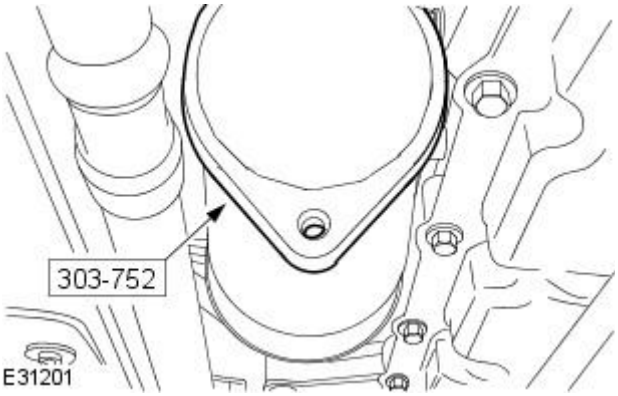


**3.** NOTE: Apply a suitable amount of clean engine oil to lubricate the oil filter O-ring seal.

Install a new oil filter.

- Tighten to 18 Nm.

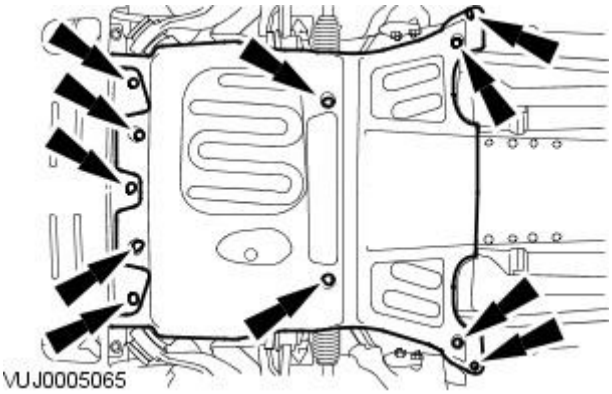


**4.** Install the air deflector.

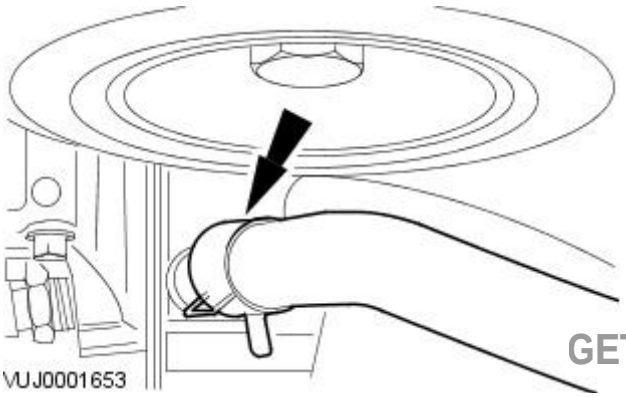


**5.** Lower the vehicle.

**6.** Connect the oil cooler hose.

GETtheMANUALS.org

7. Carry out cooling system filling and bleeding procedure.For additional information, refer to Section 303-03A Engine Cooling / 303-03B Supercharger Cooling / 303-03C Engine Cooling.

Vehicles with supercharger

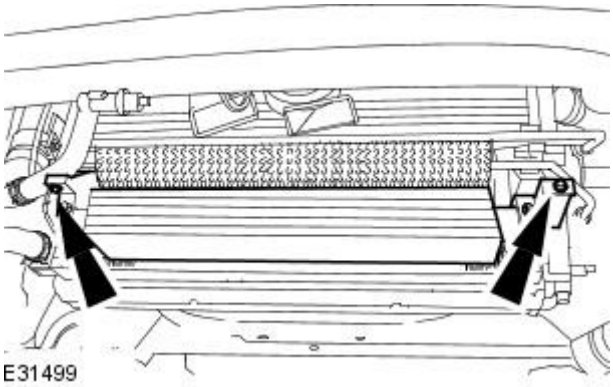


8. Install the oil cooler.
   - Tighten to 7 Nm.

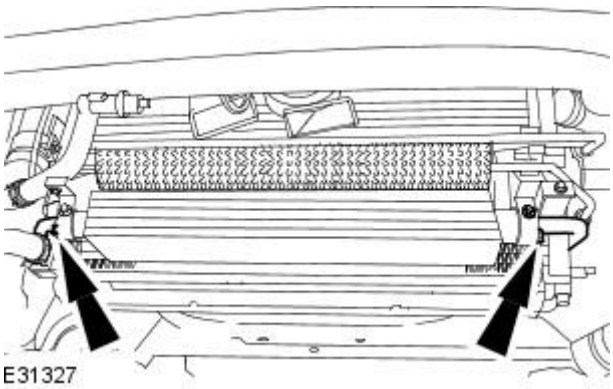


9. Install the oil cooler lines.
   - Install new oil cooler O rings.

10. Install the radiator splash shield.
    For additional information, refer to Section 501-02 Front End Body Panels.

GETtheMANUALS.org

# Engine - V8 4.2L Petrol/V8 S/C 4.2L Petrol - Oil Pan

In-vehicle Repair

## Removal

1. Remove the air deflector.
   For additional information, refer to: Air Deflector (501-02 Front End Body Panels, Removal and Installation).
2. Drain the engine oil.
   - Place suitable container under the vehicle.
   - Remove the drain plug and drain the engine oil.
3. Remove the oil pan.
   - Remove and discard the gasket.

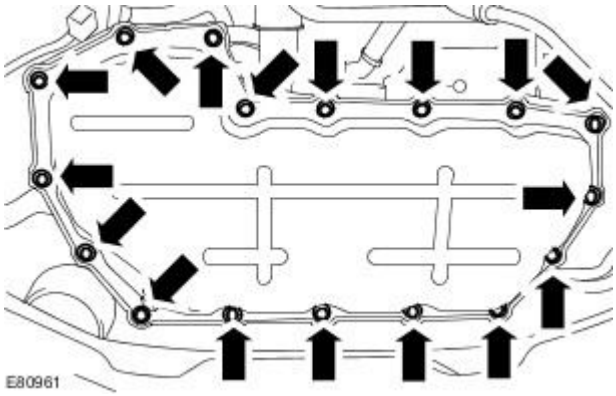


## Installation

1. NOTE: Make sure all surfaces are clean.

   Install the oil pan gasket to the oil pan extension.

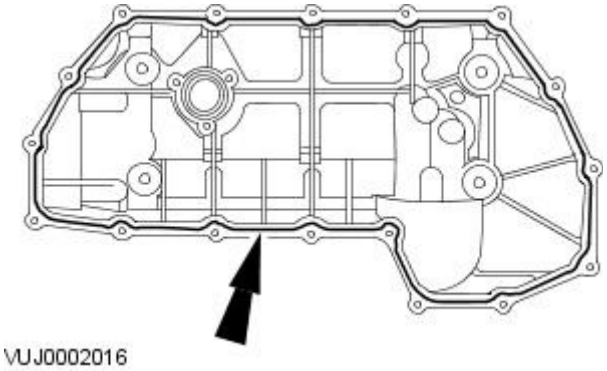


2. Install the oil pan.
   - Install, but do not fully tighten the retaining bolts.

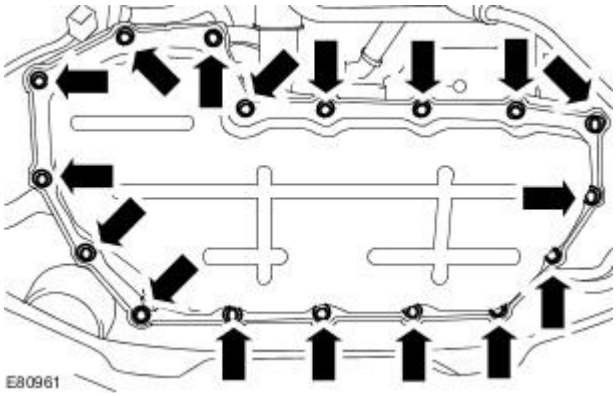


3. NOTE: A new oil pan is supplied with the drain plug installed. Check that the drain plug is tightened to 25 Nm.

   Tighten the retaining bolts in the indicated sequence in two stages.
   - Stage 1: bolts 1 to 7, tighten to 5 Nm.
   - Stage 2: bolts 1 to 17, tighten to 12 Nm.

GETtheMANUALS.org

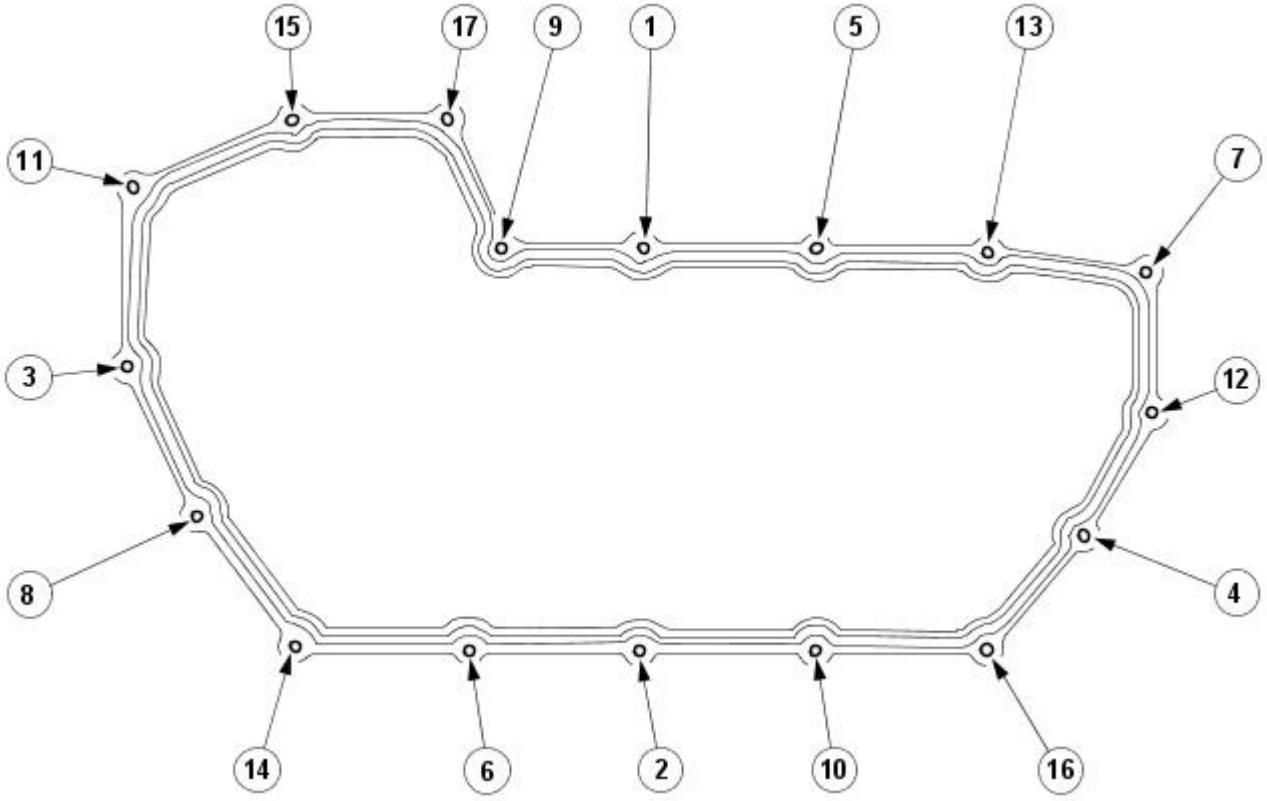

E36705

4. Install the air deflector.
   For additional information, refer to: Air Deflector (501-02 Front End Body Panels, Removal and Installation).
5. Check and top-up the engine oil.

GETtheMANUALS.org

# Engine - V8 4.2L Petrol/V8 S/C 4.2L Petrol - Oil Pan Extension

In-vehicle Repair

## Removal

1. Remove the engine front cover. For additional information, refer to: (303-01B Engine - V8 4.2L Petrol/V8 S/C 4.2L Petrol)

   Engine Front Cover - VIN Range: M45255->N52047 (In-vehicle Repair),
   Engine Front Cover - VIN Range: N52048->N99999 (In-vehicle Repair).

2. Remove the oil pan.
   For additional information, refer to: Oil Pan (303-01B Engine - V8 4.2L Petrol/V8 S/C 4.2L Petrol, In-vehicle Repair).

3. Disconnect the engine oil temperature sensor electrical connector.

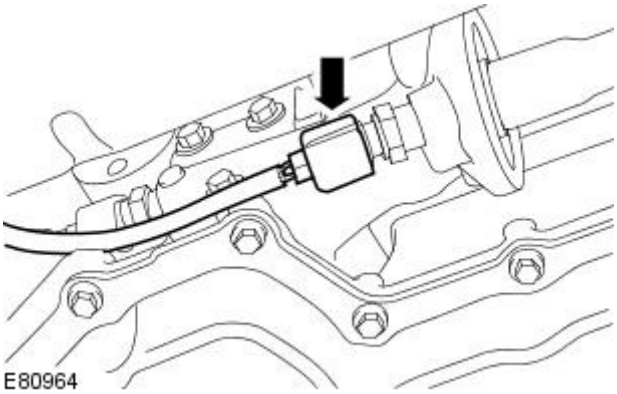


4. Disconnect the engine oil pressure sensor electrical connector.

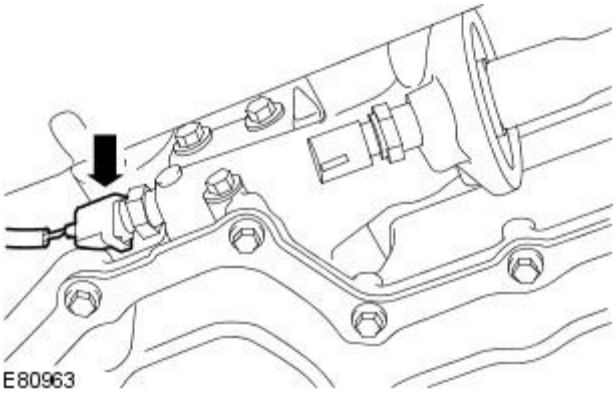


5. Remove the oil filter housing.
   - Remove and discard the O-ring seal.
   - Using suitable blanking plugs, blank the exposed ports.

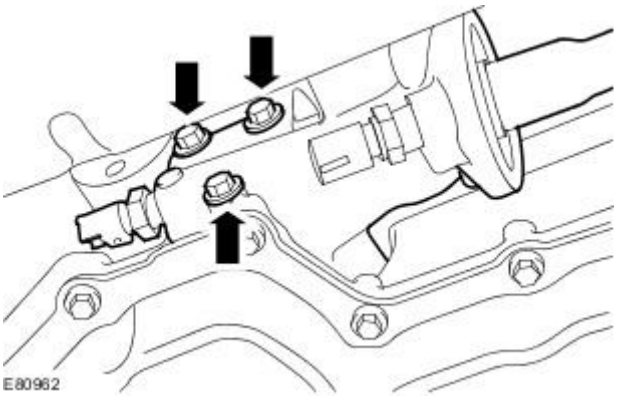


6. Remove the oil strainer.
   - Remove and discard the O-ring seal.

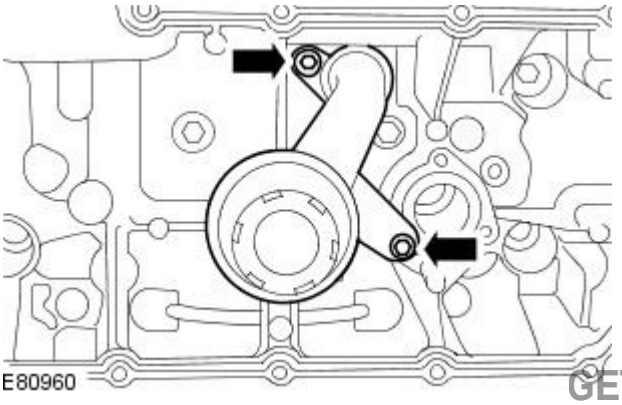


GETtheMANUALS.org

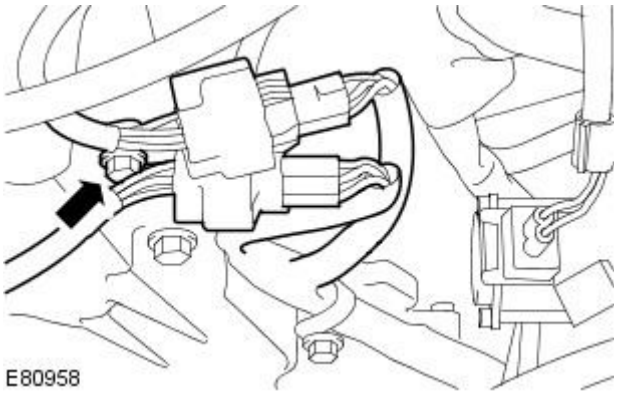


**7.** Detach the right-hand heated oxygen sensor (HO2S) electrical connector retaining bracket.

- Remove the retaining bolt.

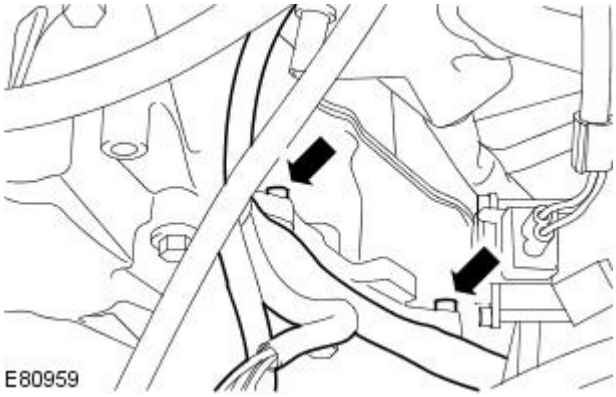


**8.** Detach the engine wiring harness.

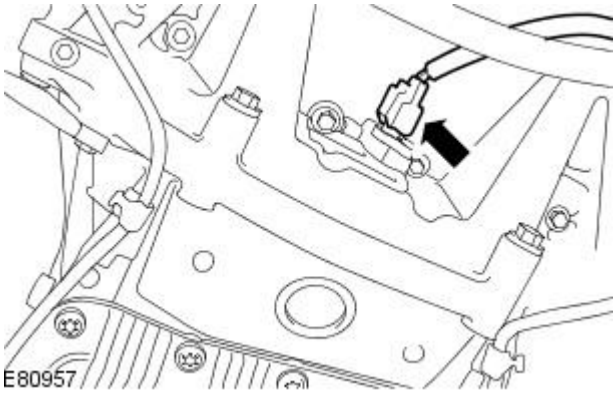


**9.** Disconnect the crankshaft position (CKP) sensor electrical connector.

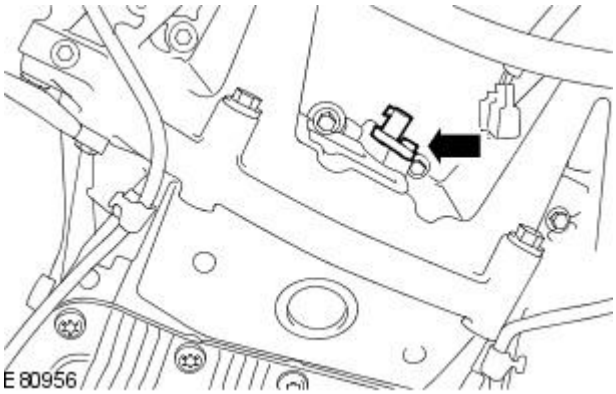


**10.** Remove the CKP sensor.

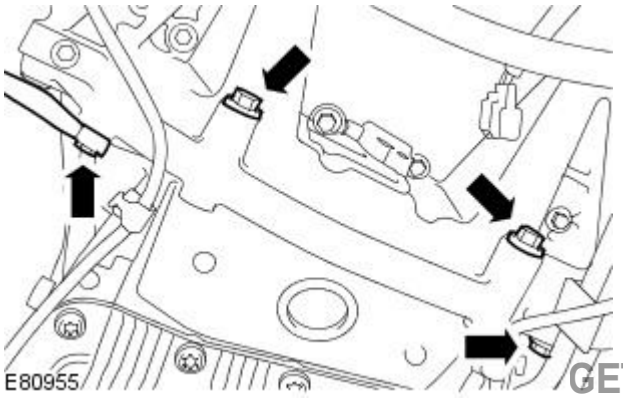


**11.** Remove the transmission bell housing to oil pan retaining bolts.

- Detach the engine ground cable.

GETtheMANUALS.org

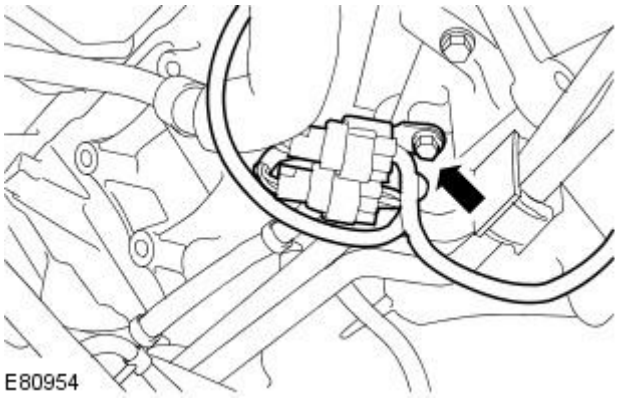


**12.** Detach the left-hand HO2S electrical connector retaining bracket.

- Remove the retaining bolt.

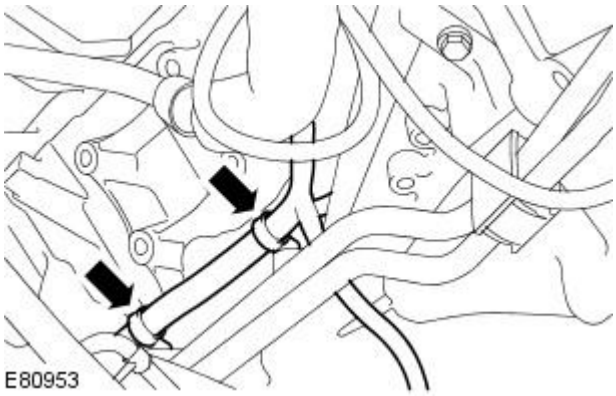


**13.** Detach the engine wiring harness.

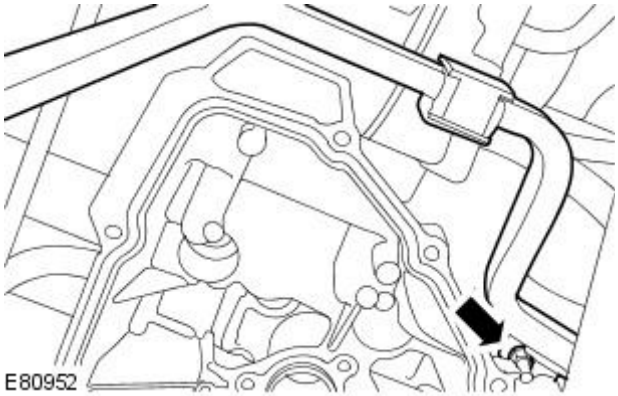


**14.** Detach the transmission fluid cooler pipes.

- Remove the retaining nut.

**15.** Remove the oil pan extension.

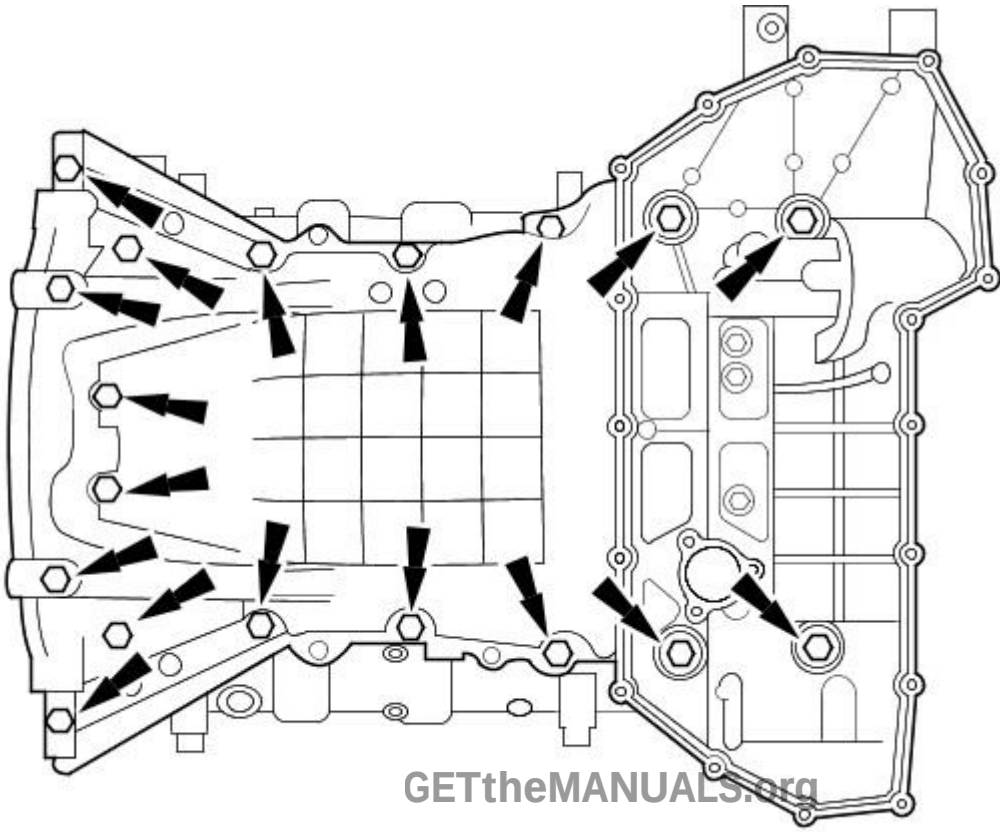


GETtheMANUALS.org

## Installation

**1.** NOTE: Use only a plastic scraper when removing old gasket material.

Clean all the mating faces and reusable parts thoroughly and check for damage.

**2.** NOTE: It is important that the oil pan extension is bolted to the bedplate within 20 minutes of applying the RTV sealant.

Apply a continuous bead of RTV sealant (Loctite 5699) 3 mm diameter, around the flange as indicated.

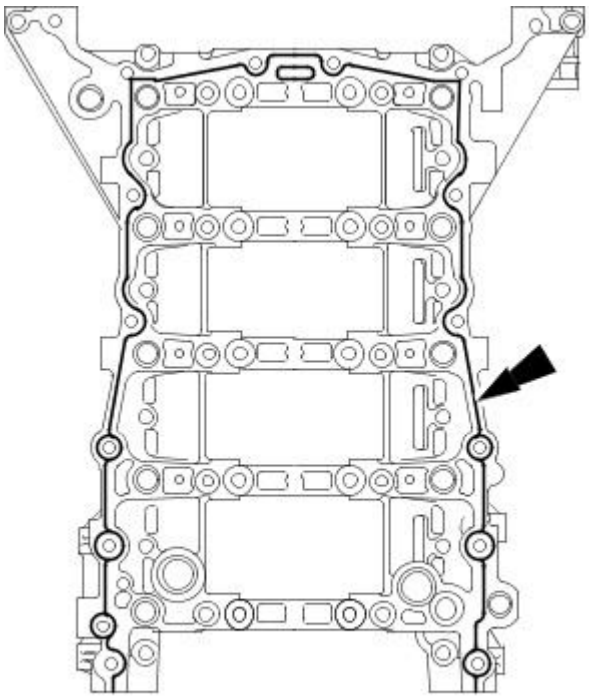

E32647

**3.** NOTE: It is important that the oil pan extension is bolted to the bedplate within 20 minutes of applying the RTV sealant.

Apply a continuous bead of RTV sealant (Loctite 5699) 2 mm diameter, around the diverter valve flange as indicated.

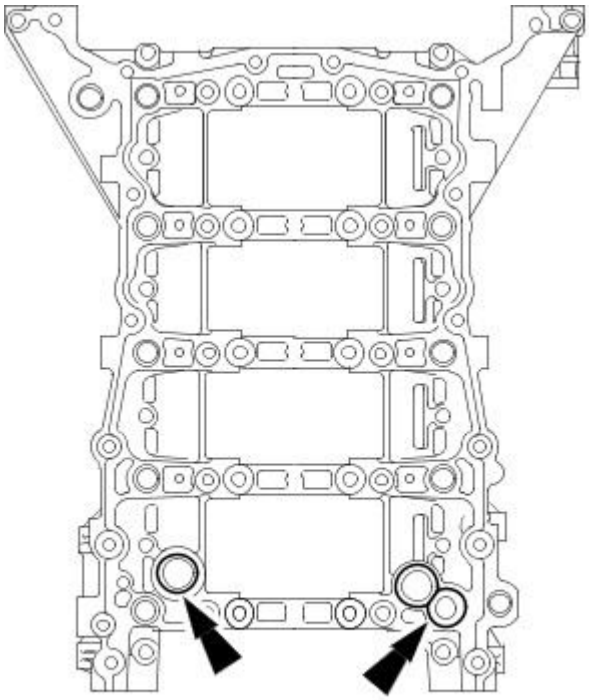

E32648

**4.** NOTE: Tighten the retaining bolts in the indicated sequence.

Install the oil pan extension to the bedplate.

1. Tighten to 21 Nm.

GETtheMANUALS.org

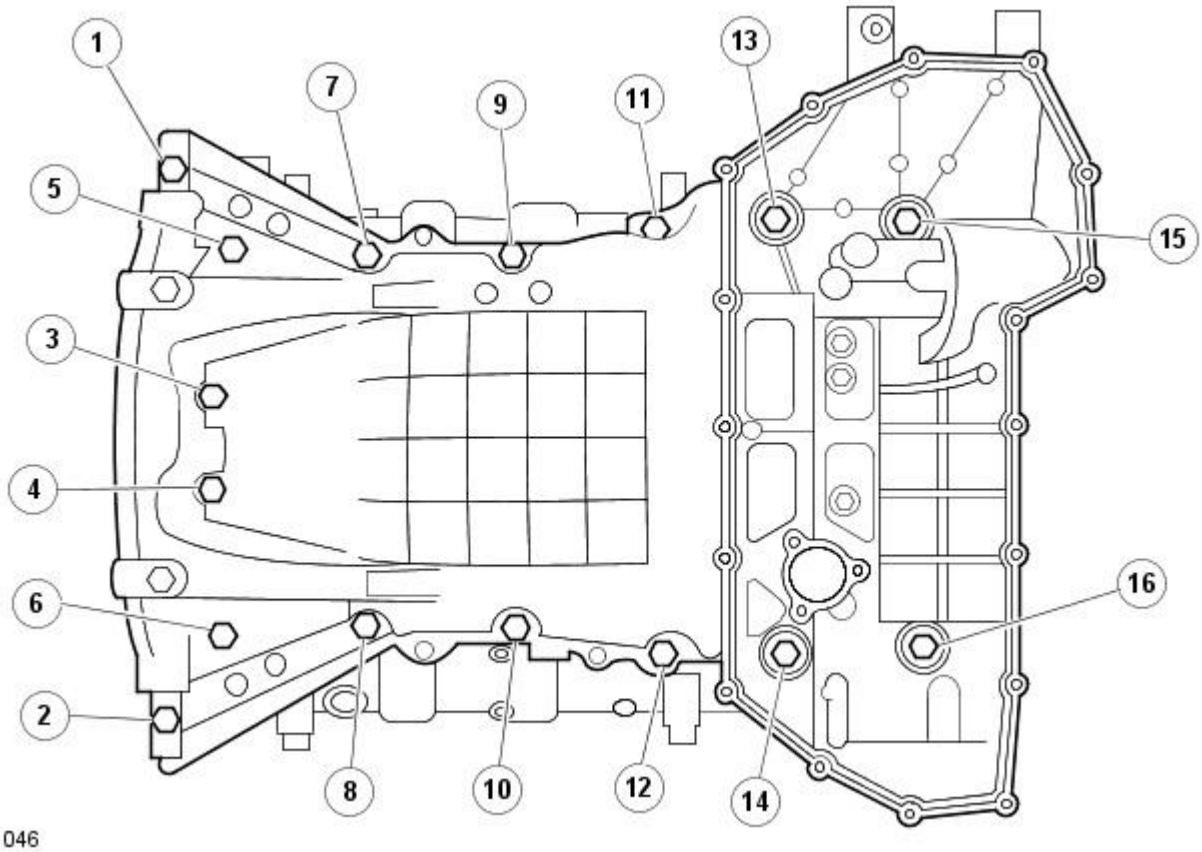

E81046

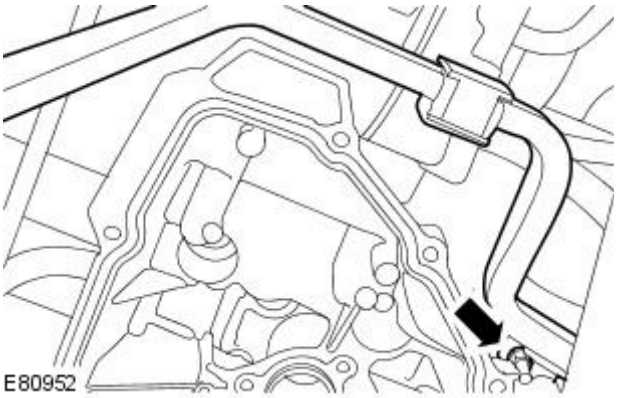
E80952

**5.** Attach the transmission fluid cooler pipes.

- Install the retaining nut.
- Tighten to 10 Nm.

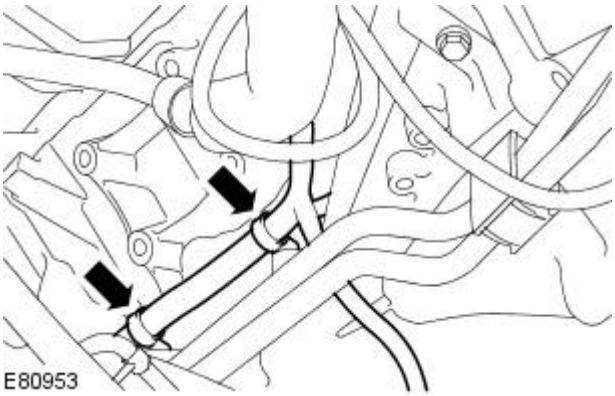
E80953

**6.** Attach the engine wiring harness.

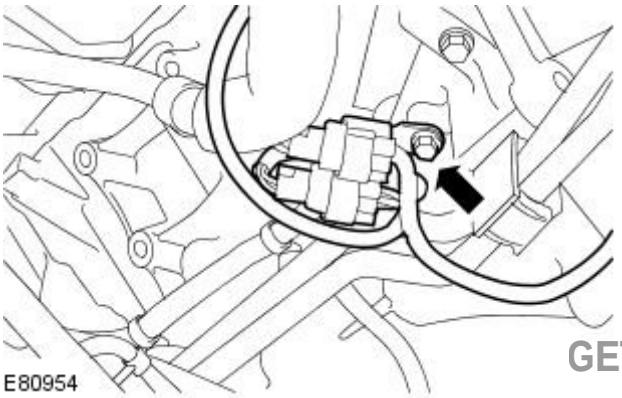
E80954

**7.** Attach the left-hand HO2S electrical connector retaining bracket.

- Install the retaining bolt.
- Tighten to 10 Nm.

GETtheMANUALS.org

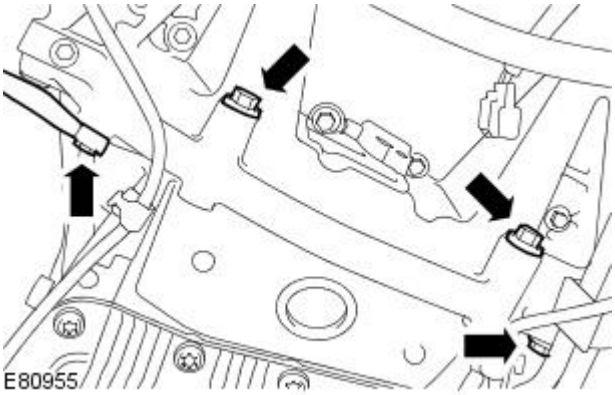


**8.** Install the transmission bell housing to oil pan retaining bolts.

- Attach the engine ground cable.
- Tighten to 48 Nm.

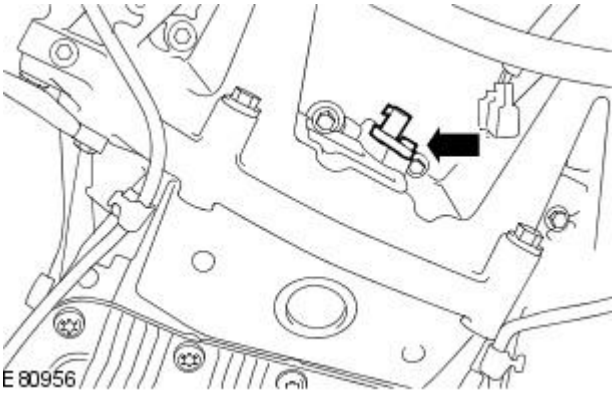


**9.** Install the CKP sensor.

- Tighten to 10 Nm.

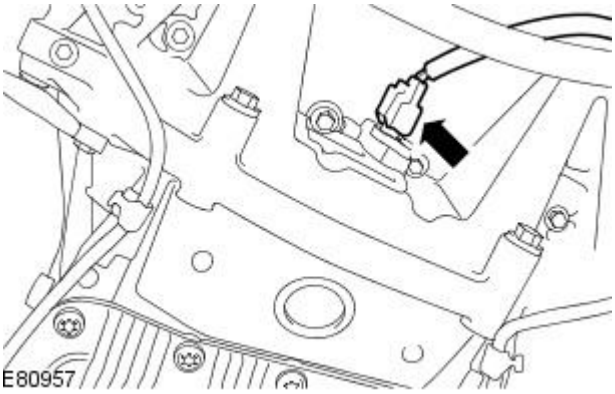


**10.** Connect the CKP sensor electrical connector.

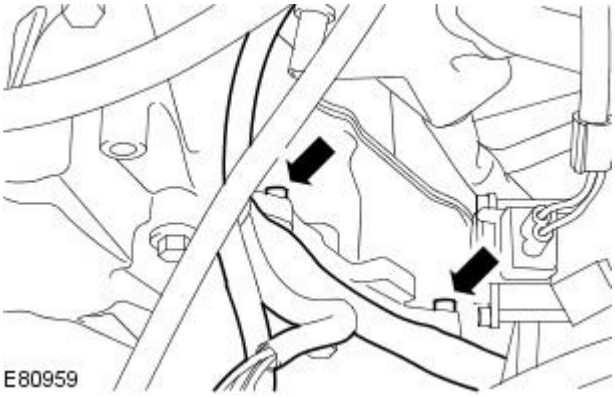


**11.** Attach the engine wiring harness.

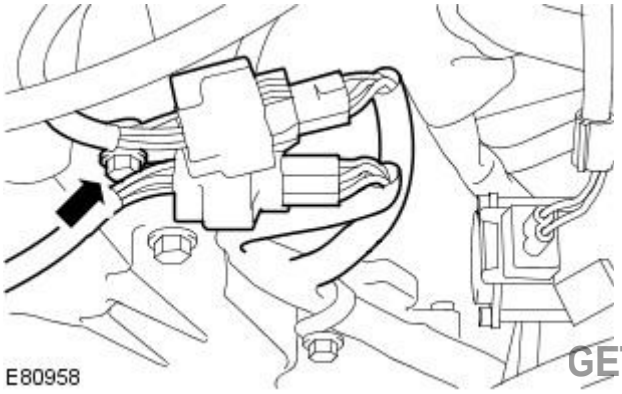


**12.** Attach the right-hand HO2S electrical connector retaining bracket.

- Install the retaining bolt.
- Tighten to 10 Nm.

GETtheMANUALS.org

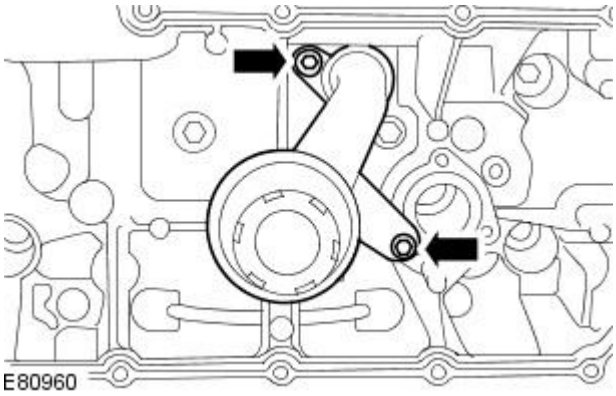


**13.** Install the oil strainer.

- Install a new O-ring seal.
- Tighten to 12 Nm.

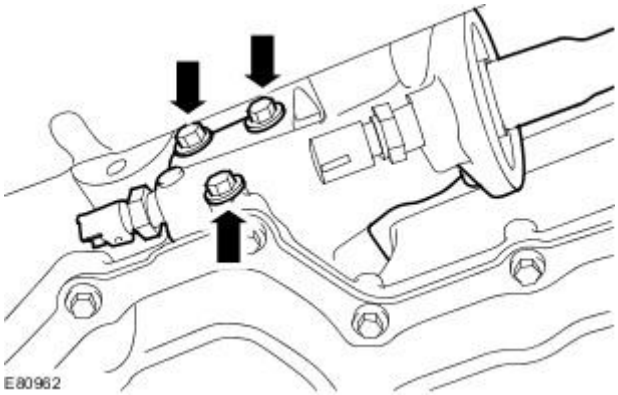


**14.** Install the oil filter housing.

- Remove the blanking plugs.
- Install a new O-ring seal.
- Tighten to 21 Nm.

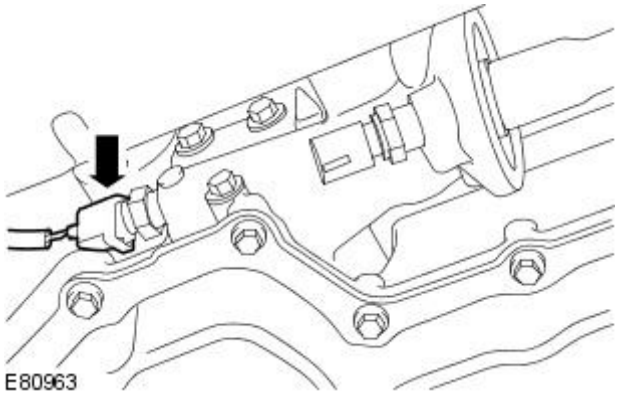


**15.** Connect the engine oil pressure sensor electrical connector.

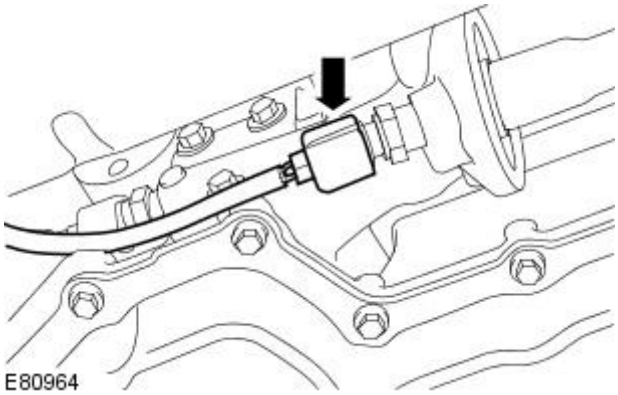


**16.** Connect the engine oil temperature sensor electrical connector.

**17.** Install the oil pan.
For additional information, refer to: Oil Pan (303-01B Engine - V8 4.2L Petrol/V8 S/C 4.2L Petrol, In-vehicle Repair).

**18.** Install the engine front cover. For additional information, refer to: (303-01B Engine - V8 4.2L Petrol/V8 S/C 4.2L Petrol)

Engine Front Cover - VIN Range: M45255->N52047 (In-vehicle Repair),
Engine Front Cover - VIN Range: N52048->N99999 (In-vehicle Repair).

GETtheMANUALS.org

# Engine - V8 4.2L Petrol/V8 S/C 4.2L Petrol - Oil PumpVIN Range: M45255->N52047

In-vehicle Repair

| Special Tool(s) | |
|---|---|
| 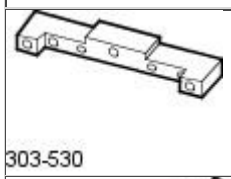 303-530 | Camshaft setting<br><br>303-530 |
| 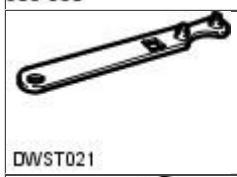 DWST021 | Timing chain tensioning tool<br><br>303-532 |
| 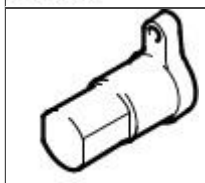 DWST032 | Crankshaft setting, main tool<br><br>303-645 |

## Removal

All vehicles

1. Remove the oil pan.
   For additional information, refer to Oil Pan in this section.
2. Remove the oil strainer.
   - Remove and discard the O-ring seal.

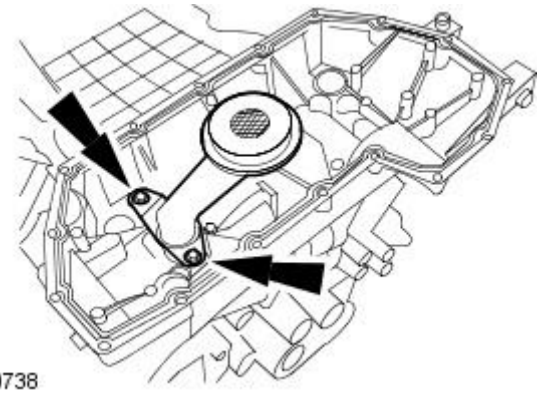

E30738

3. Disconnect the crankshaft position sensor electrical connector.

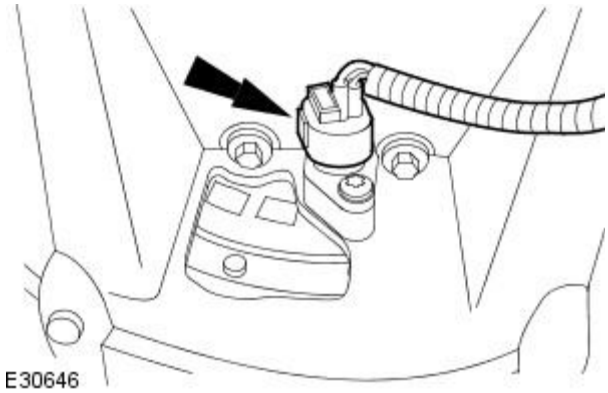

E30646

4. Remove the crankshaft position sensor.

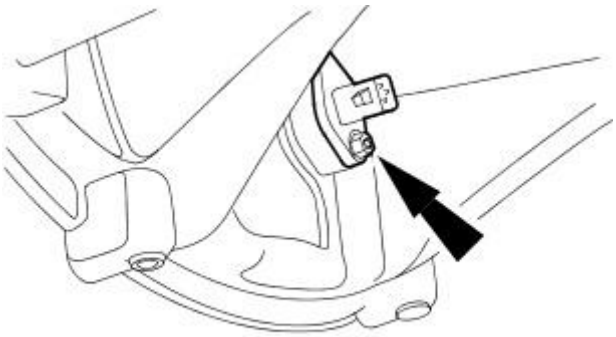

E30694

GETtheMANUALS.org

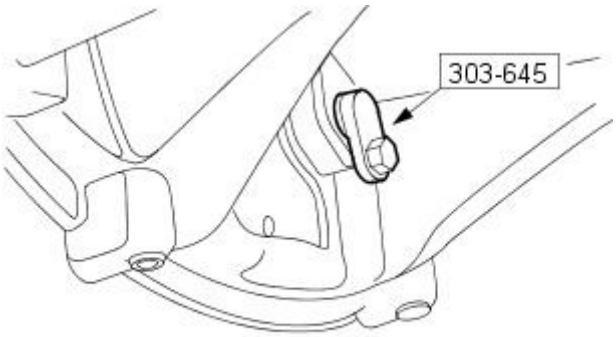


VUJ0002400

**5.** Remove the special tool.

**6.** Remove the engine front cover.
For additional information, refer to Engine Front Cover in this section.

Vehicles without supercharger

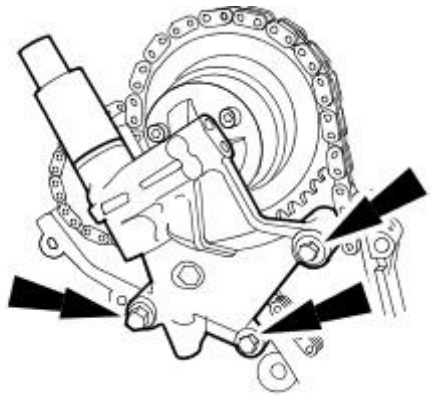

E30699

**7.** Remove the right-hand variable camshaft timing oil control unit housing.

- Remove and discard the O-ring seals.

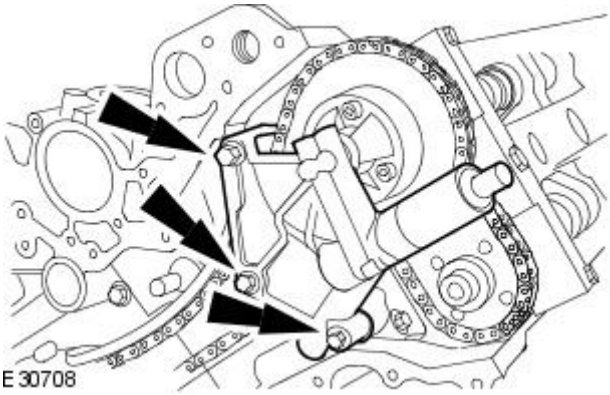

E30708

**8.** Remove the left-hand variable camshaft timing oil control unit housing.

- Remove and discard the O-ring seals.

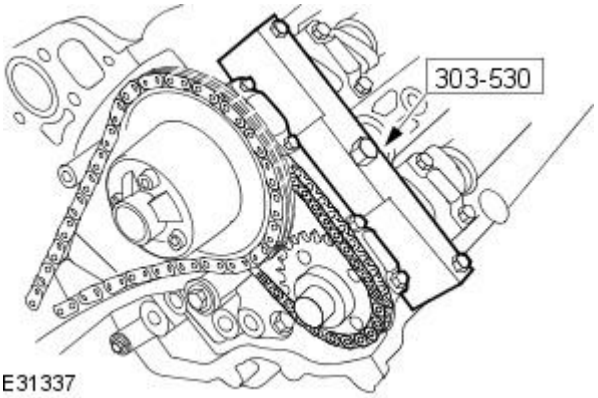


E31337

**9.** Install the special tool to the left-hand cylinder head.

GETtheMANUALS.org

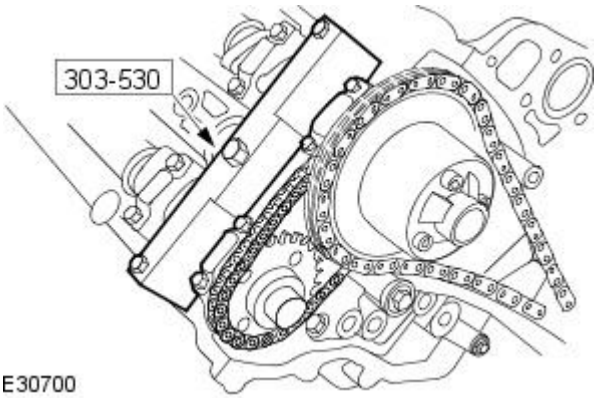

E30700

**10.** Install the special tool to the Right-hand cylinder head.

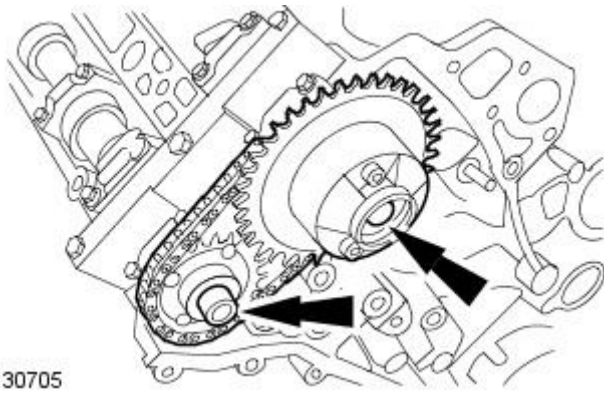
E30705

**11.** CAUTION: Make sure the secondary timing chain and camshaft sprockets are free to rotate.

Loosen the camshaft sprockets.

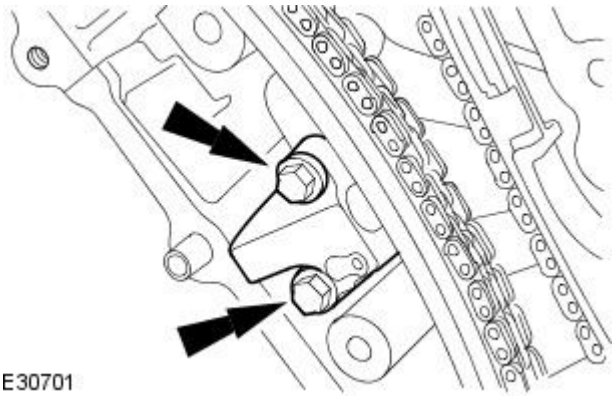
E30701

**12.** Remove the primary timing chain tensioner assembly.

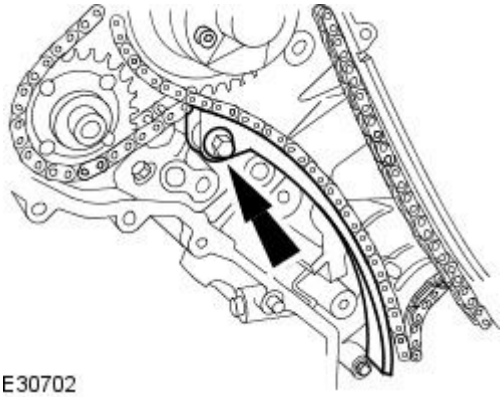
E30702

**13.** Remove the primary timing chain tensioner guide.

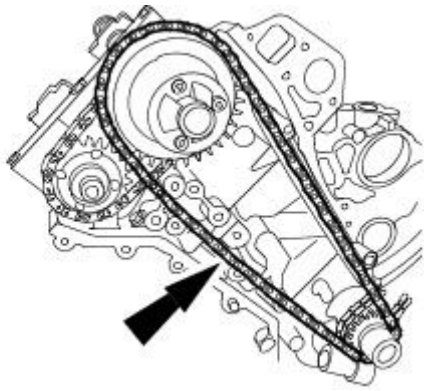
E30703

**14.** Remove the primary timing chain.

GETtheMANUALS.org

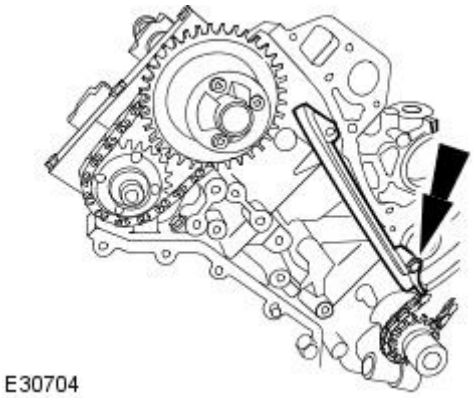


**15.** Remove the primary timing chain guide.

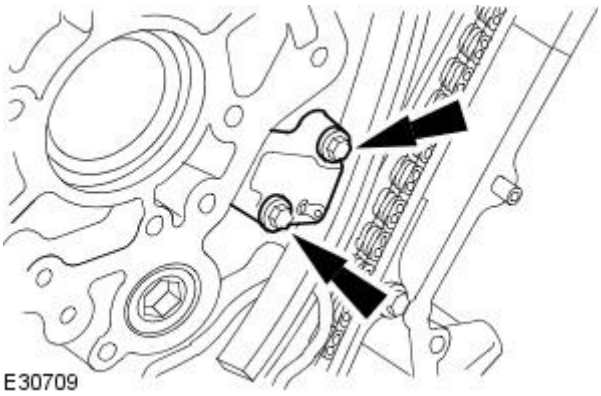


**16.** Remove the primary timing chain tensioner assembly.

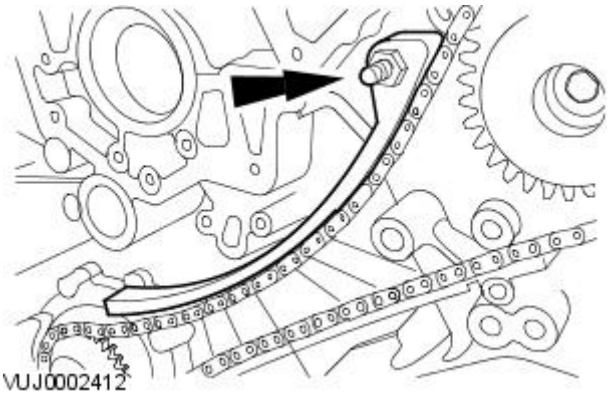


**17.** Remove the primary timing chain tensioner guide.

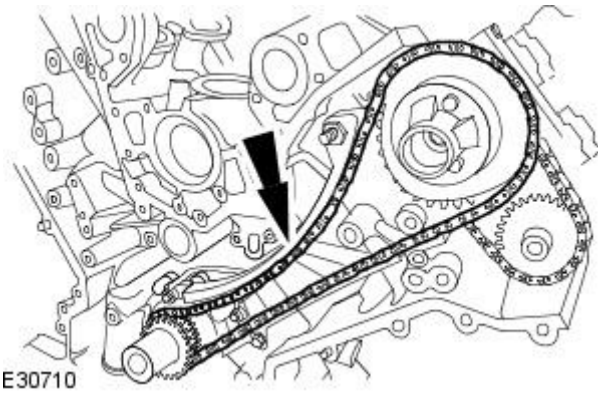


**18.** Remove the primary timing chain.

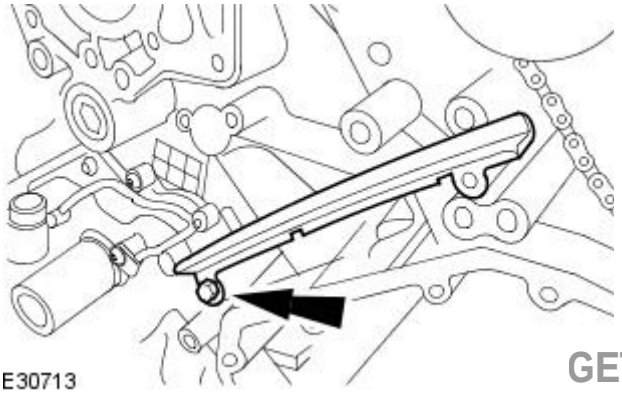


**19.** Remove the primary timing chain tensioner guide.

GETtheMANUALS.org

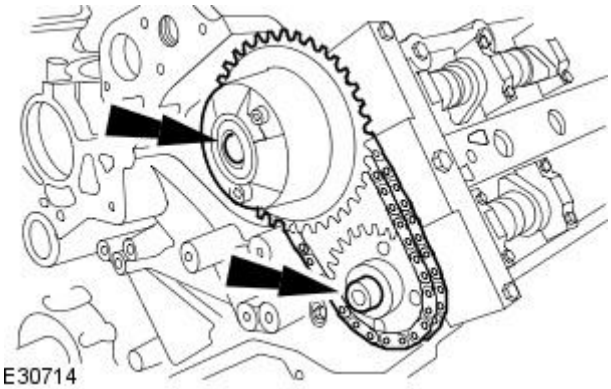


**20.** CAUTION: Make sure the secondary timing chain and camshaft sprockets are free to rotate.

Loosen the camshaft sprockets.

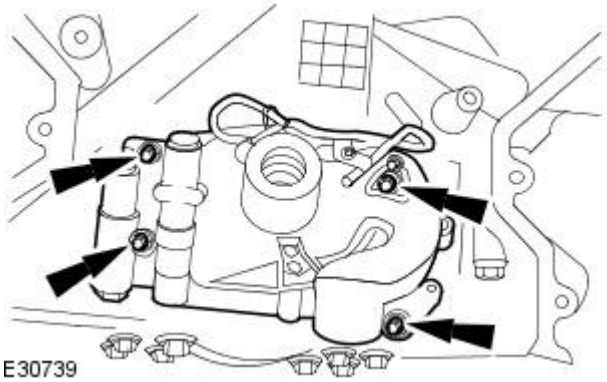


**21.** Remove the oil pump.

- Remove and discard the gasket.

## Installation

All vehicles

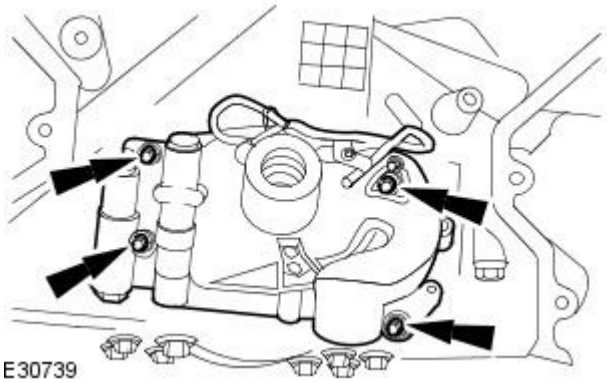


**1.** Install the oil pump.

- Install a new gasket.
- Tighten to 12 Nm.

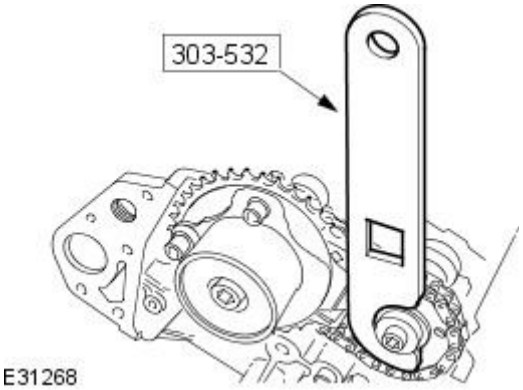


**2.** Install the timing chain tensioning tool 303-532 to the exhaust camshaft sprocket.

- Reposition the camshaft sprockets for the most advantageous position for use of the tool.

GETtheMANUALS.org

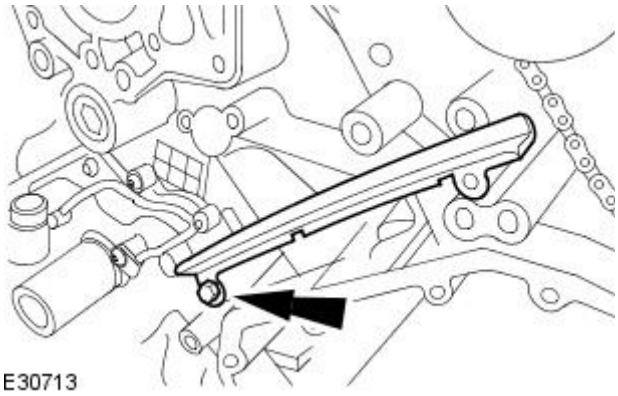


**3.** Install the primary timing chain tensioner guide.

- Tighten to 12 Nm.

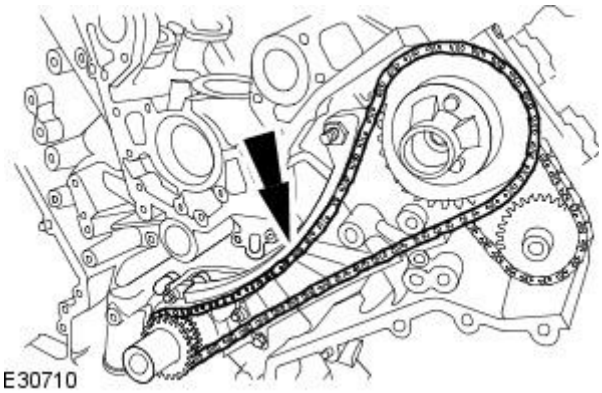


**4.** CAUTION: Make sure the timing chain slack is on the tensioned side of the timing chain.

Install the primary timing chain.

- Install the primary chain over the crankshaft sprocket and the intake sprocket.

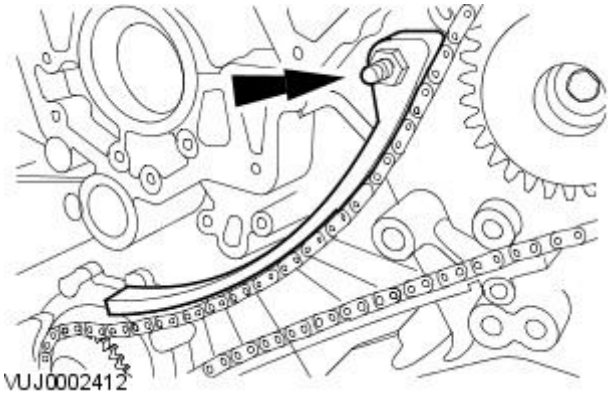


**5.** Install the primary timing chain tensioner guide.

- Tighten to 12 Nm.

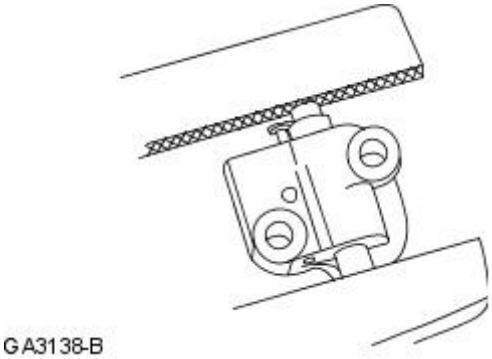


**6.** CAUTION: Use suitable protective covers on the vice jaws to protect the timing chain tensioner.

Secure the left-hand timing chain tensioner in the vice jaws.

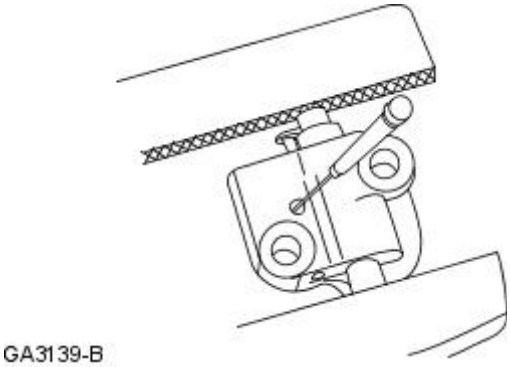


**7.** CAUTION: During timing chain tensioner compression, do not release the ratchet stem until the timing chain tensioner piston is fully bottomed in its bore or damage to the ratchet stem will result.

Using a suitable tool, hold the left-hand timing chain tensioner ratchet lock mechanism away from the ratchet stem.

GETtheMANUALS.org

**8.** NOTE: The timing chain tensioner piston should retract with minimal force. If binding occurs, reposition the timing chain tensioner to eliminate

side loading.

Slowly compress the left-hand timing chain tensioner.

**9.** NOTE: The retaining tool must remain in the timing chain tensioner until the timing chain tensioner is installed to the engine with the piston bottomed in the bore.

Using a suitable tool, retain the left-hand timing chain tensioner piston.

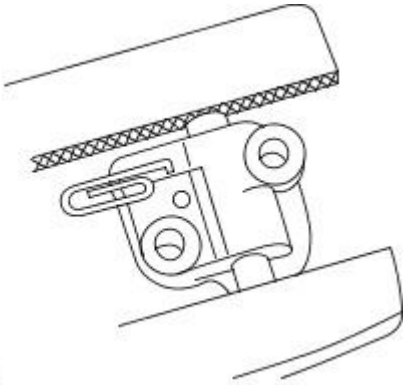

GA3140-A

**10.** Install the primary timing chain tensioner assembly.

- Tighten to 12 Nm.

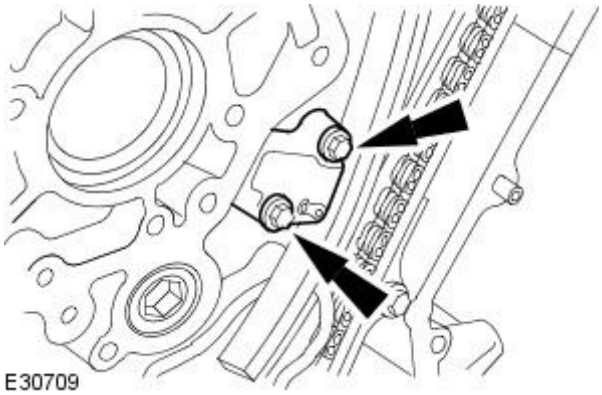

E30709

**11.** Release the tension in the left-hand timing chain tensioner.

- Remove the retaining tool.

**12.** CAUTION: While applying the opposing force to sprocket and chain, tighten the sprocket bolt.

Using the special tool apply force to the tool in an anti-clockwise direction to tension the primary timing chain on its drive side.

- Tighten to 120 Nm.

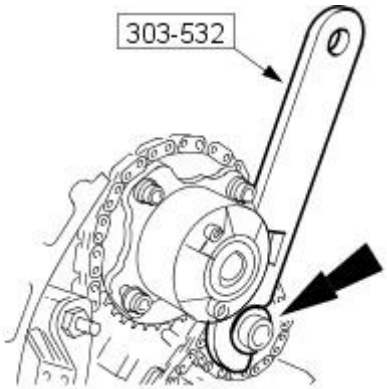


E31269

**13.** CAUTION: While applying the opposing force to sprocket and chain, tighten the sprocket bolt.

Using the special tool apply force to the tool in an anti-clockwise direction.

- Tighten to 120 Nm.

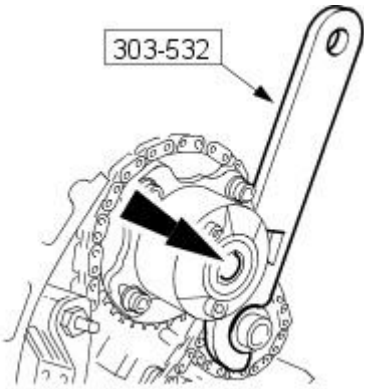


E31270

GETtheMANUALS.org

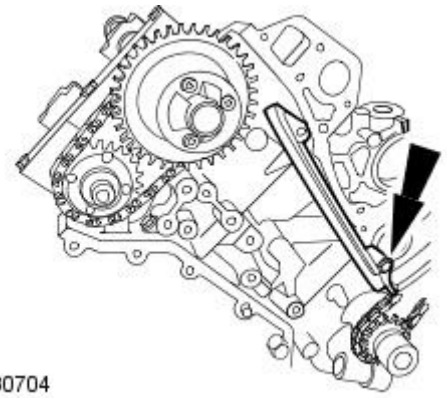

E30704

**14.** Install the primary timing chain guide.

- Tighten to 12 Nm.

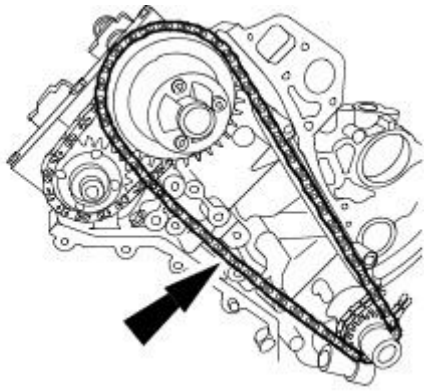

E30703

**15.** CAUTION: Make sure the timing chain slack is on the tensioned side of the timing chain.

Install the primary timing chain.

- Install the primary chain over the crankshaft sprocket and the intake sprocket.

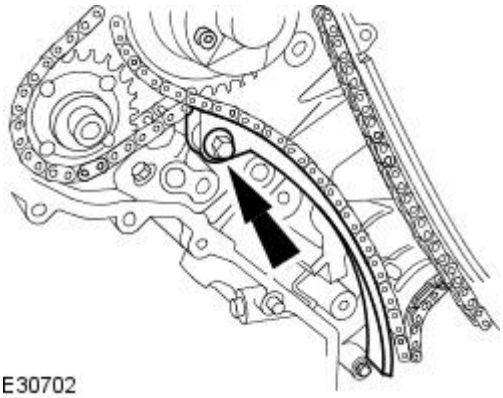

E30702

**16.** Install the primary timing chain tensioner guide.

- Tighten to 12 Nm.

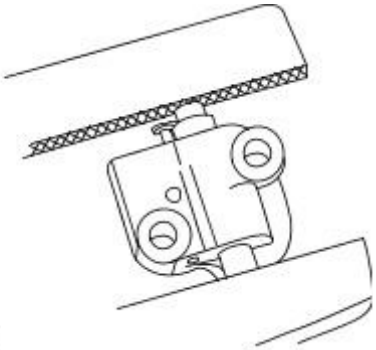

GA3138-B

**17.** CAUTION: Use suitable protective covers on the vice jaws to protect the timing chain tensioner.

Secure the right-hand timing chain tensioner in the vice jaws.

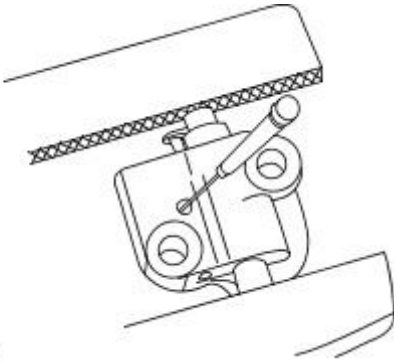

GA3139-B

**18.** CAUTION: During timing chain tensioner compression, do not release the ratchet stem until the timing chain tensioner piston is fully bottomed in its bore or damage to the ratchet stem will result.

Using a suitable tool, hold the right-hand timing chain tensioner ratchet lock mechanism away from the ratchet stem.

GETtheMANUALS.org

**19.** NOTE: The timing chain tensioner piston should retract with minimal force. If binding occurs, reposition the timing chain tensioner to eliminate

side loading.

Slowly compress the right-hand timing chain tensioner.

**20.** NOTE: The retaining tool must remain in the timing chain tensioner until the timing chain tensioner is installed to the engine with the piston bottomed in the bore.

Using a suitable tool, retain the right-hand timing chain tensioner piston.

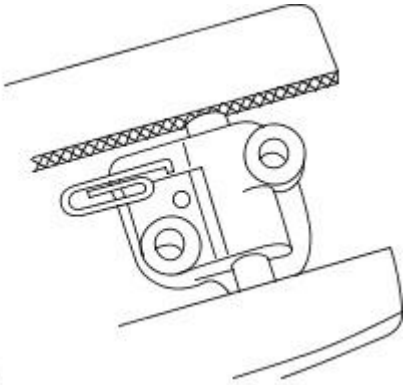

GA3140-A

**21.** Install the primary timing chain tensioner assembly.

- Tighten to 12 Nm.

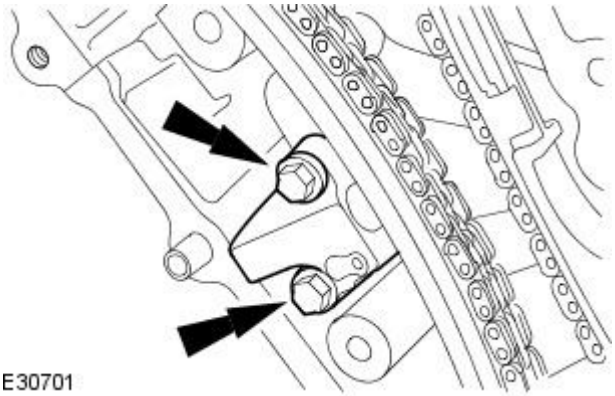

E30701

**22.** Release the tension in the left-hand timing chain tensioner.

- Remove the retaining tool.

**23.** CAUTION: While applying the opposing force to sprocket and chain, tighten the sprocket bolt.

Using the special tool apply force to the tool in an anti-clockwise direction to tension the primary timing chain on its drive side.

- Tighten to 120 Nm.

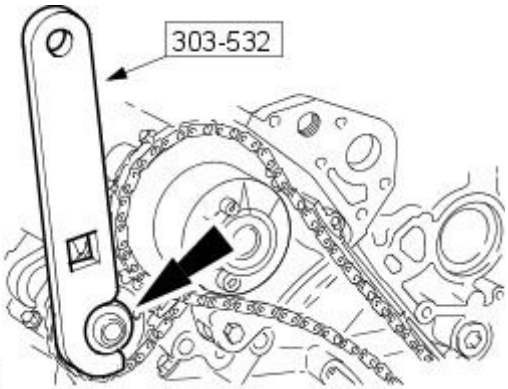


E31271

**24.** CAUTION: While applying the opposing force to sprocket and chain, tighten the sprocket bolt.

Using the special tool apply force to the tool in an anti-clockwise direction.

- Tighten to 120 Nm.

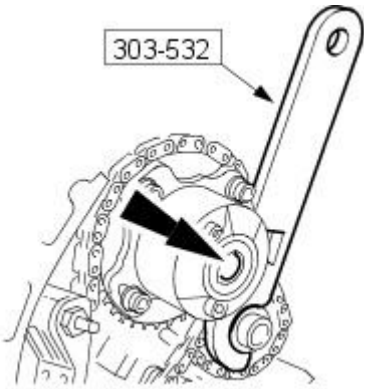


E31270

GETtheMANUALS.org

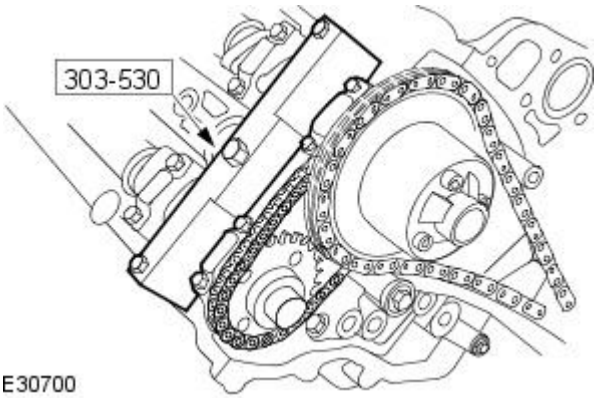


**25.** Remove the special tool to the Right-hand cylinder head.

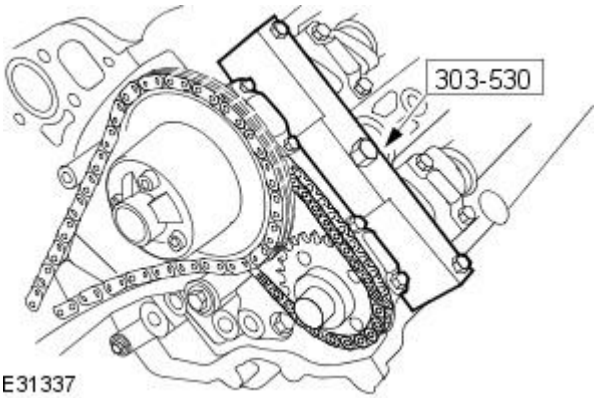


**26.** Remove the special tool to the left-hand cylinder head.

Vehicles without supercharger

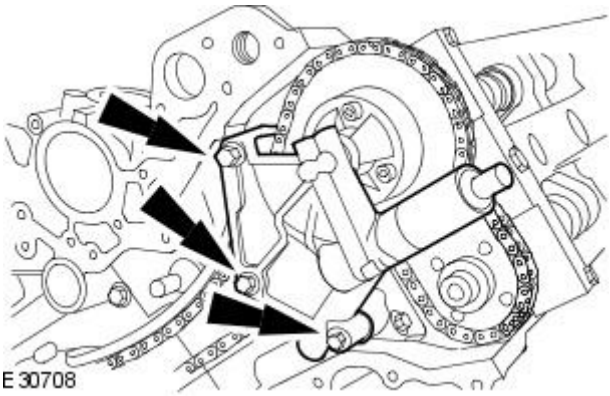


**27.** Install the left-hand variable camshaft timing oil control unit housing.

- Install new O-ring seals.
- Tighten to 22 Nm.

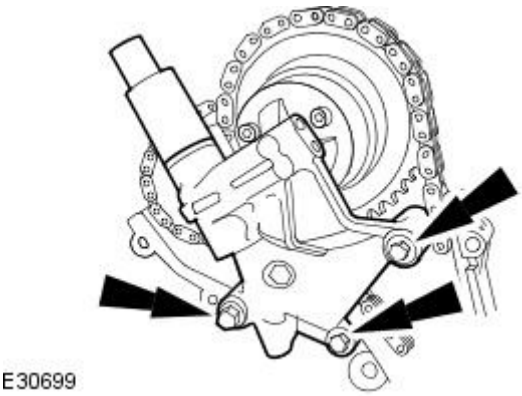


**28.** Install the right-hand variable camshaft timing oil control unit housing.

- Install new O-ring seals.
- Tighten to 22 Nm.

All vehicles

GETtheMANUALS.org

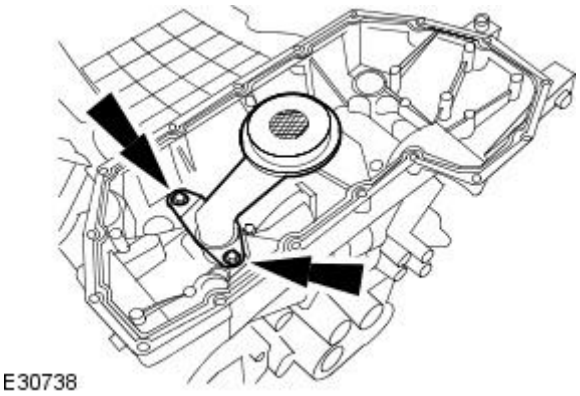
E30738

**29.** Install the oil strainer.

- Install new O-ring seals.
- Tighten to 12 Nm.

**30.** Install the oil pan.
For additional information, refer to Oil Pan in this section.

**31.** Remove the special tool.

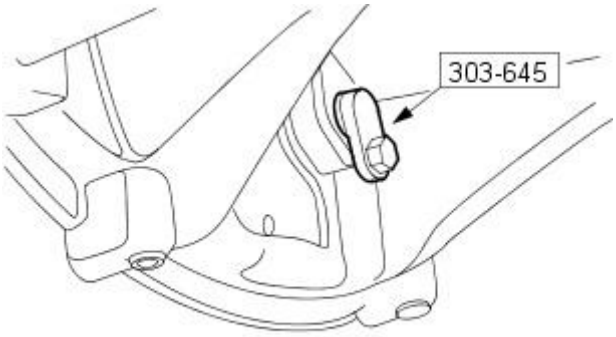

VUJ0002400

**32.** Install the crankshaft position sensor.

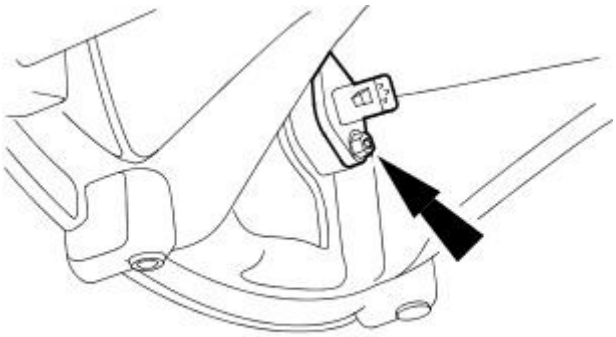
E30694

**33.** Connect the crankshaft position sensor electrical connector.

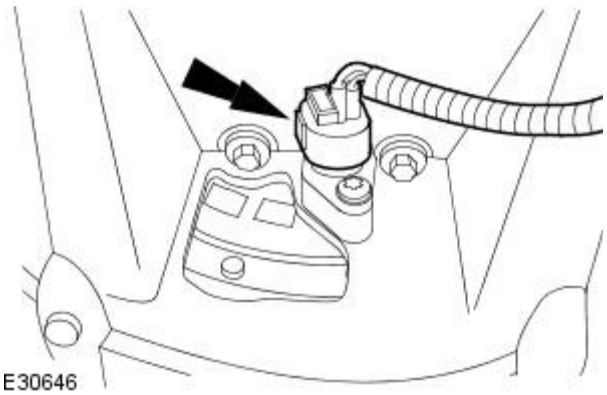
E30646

**34.** Install the air deflector. For additional information, refer to Section 501-20A Safety Belt System / 501-20B Supplemental Restraint System.

**35.** Install the engine front cover.
For additional information, refer to Engine Front Cover in this section.

GETtheMANUALS.org

# Engine - V8 4.2L Petrol/V8 S/C 4.2L Petrol - Oil PumpVIN Range: N52048->N99999

In-vehicle Repair

| Special Tool(s) | |
|---|---|
| 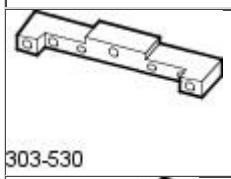 303-530 | Camshaft setting<br><br>303-530 |
| 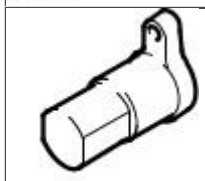 DWST032 | Crankshaft setting, main tool<br><br>303-645 |
| DWST021 | Timing chain tensioning tool<br><br>303-532 |

## Removal

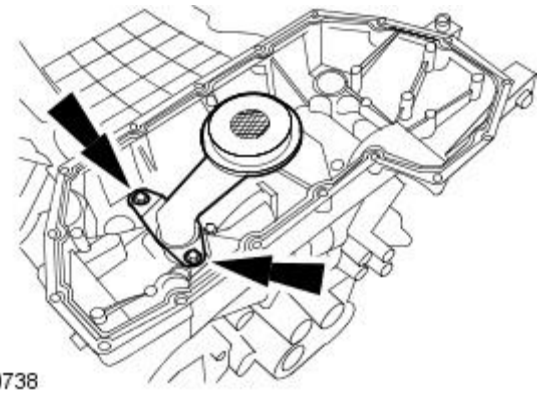
E30738

1. Remove the oil pan.
   For additional information, refer to: Oil Pan (303-01B Engine - V8 4.2L Petrol/V8 S/C 4.2L Petrol, In-vehicle Repair).
2. Remove the oil strainer.
   - Remove and discard the O-ring seal.

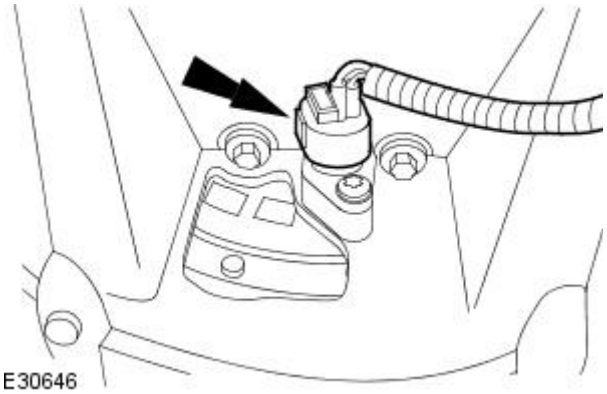
E30646

3. Disconnect the crankshaft position (CKP) sensor electrical connector.

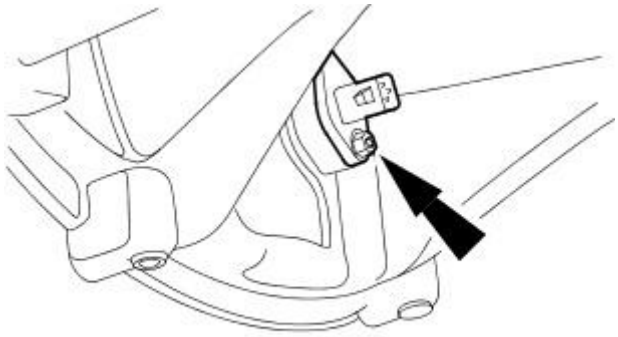
E30694

4. Remove the CKP.

GETtheMANUALS.org

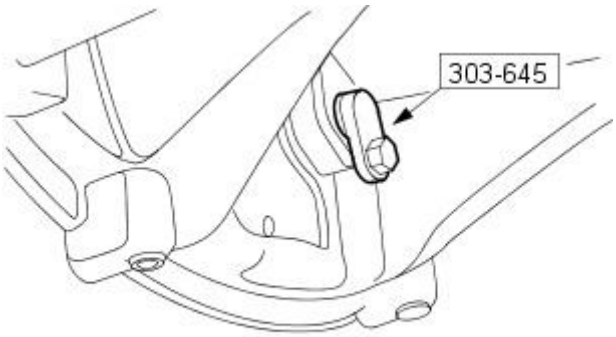


VUJ0002400

**5.** Install the special tool.

**6.** Remove the engine front cover.
For additional information, refer to: Engine Front Cover - VIN Range: N52048->N99999 (303-01B Engine - V8 4.2L Petrol/V8 S/C 4.2L Petrol, In-vehicle Repair).

**7.** Remove the right-hand variable camshaft timing oil control unit housing.

- Remove and discard the O-ring seals.

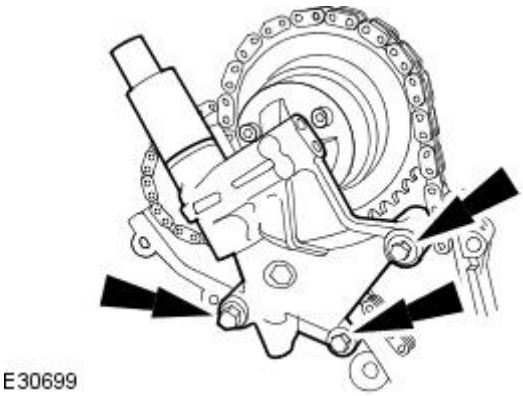

E30699

**8.** Remove the left-hand variable camshaft timing oil control unit housing.

- Remove and discard the O-ring seals.

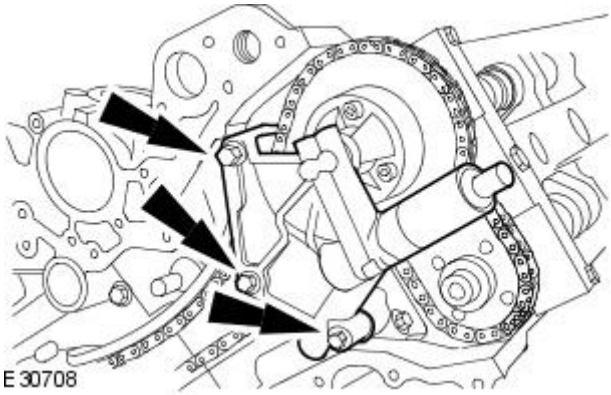

E30708

**9.** Install the special tool to the left-hand cylinder head.

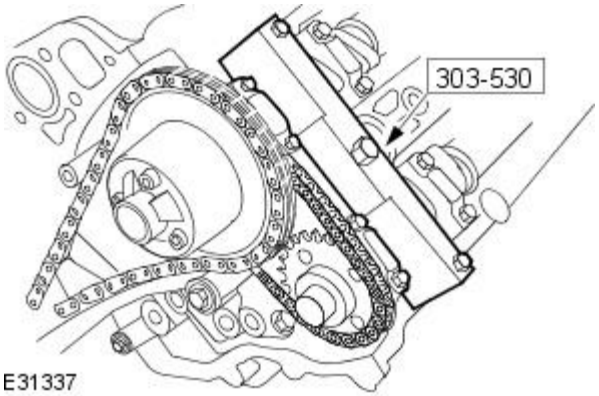


E31337

GETtheMANUALS.org

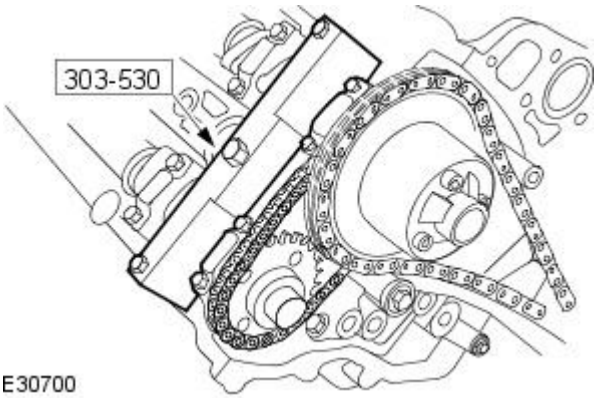

E30700

**10.** Install the special tool to the right-hand cylinder head.

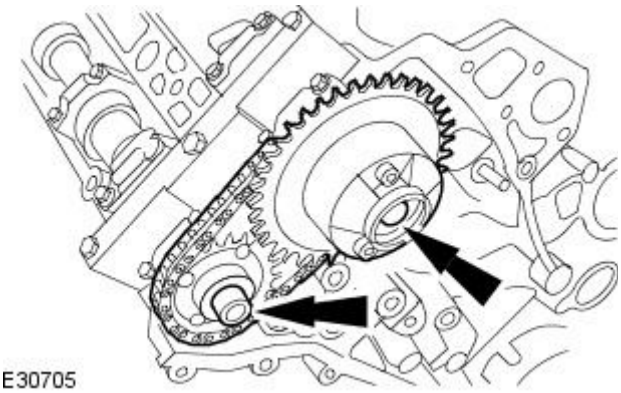
E30705

**11.** CAUTION: Make sure the secondary timing chain and camshaft sprockets are free to rotate.

Loosen the camshaft sprockets.

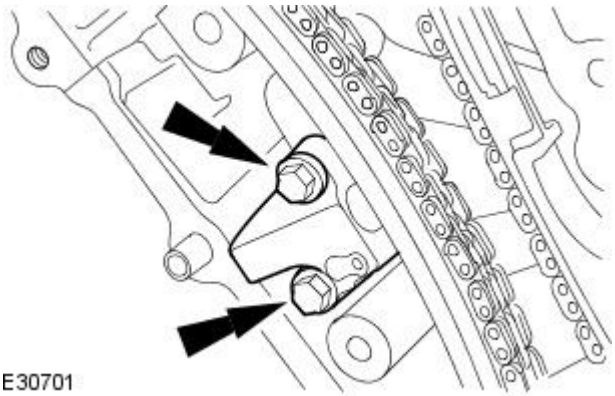
E30701

**12.** Remove the primary timing chain tensioner assembly.

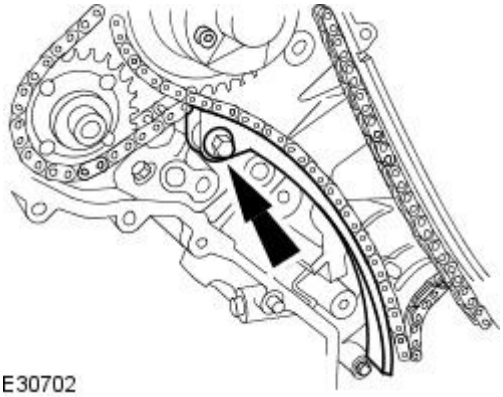
E30702

**13.** Remove the primary timing chain tensioner guide.

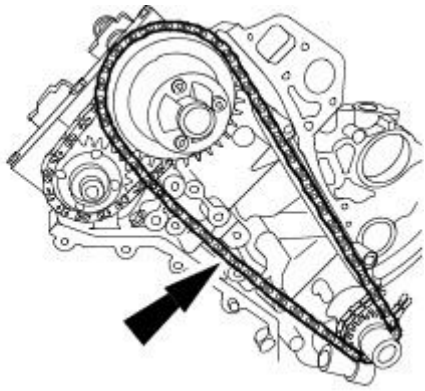
E30703

**14.** Remove the primary timing chain.

GETtheMANUALS.org

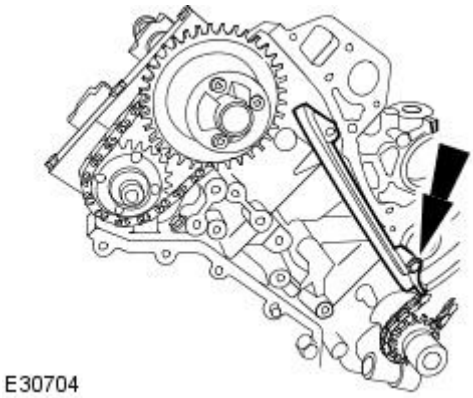


**15.** Remove the primary timing chain guide.

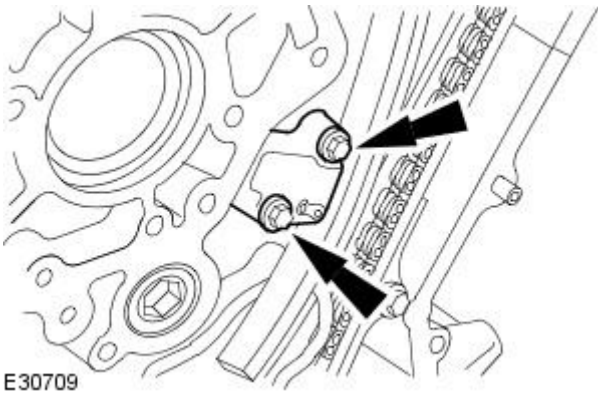


**16.** Remove the primary timing chain tensioner assembly.

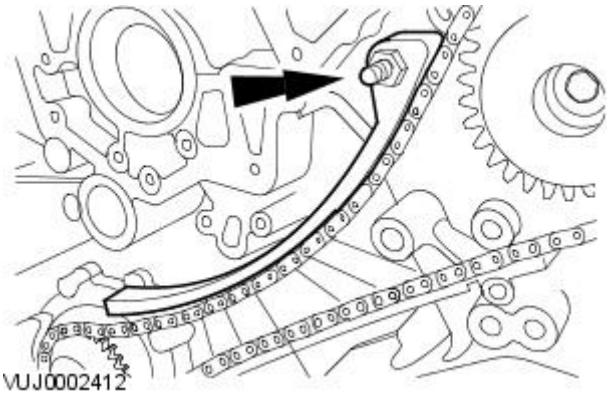


**17.** Remove the primary timing chain tensioner guide.

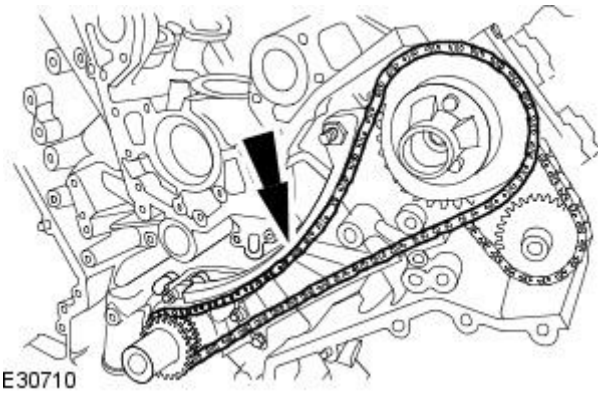


**18.** Remove the primary timing chain.

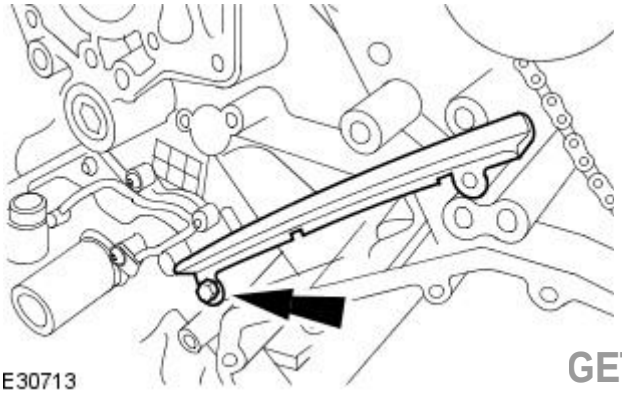


**19.** Remove the primary timing chain tensioner guide.

GETtheMANUALS.org

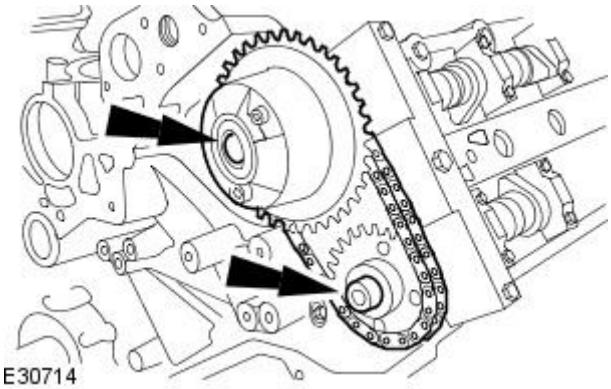


**20.** CAUTION: Make sure the secondary timing chain and camshaft sprockets are free to rotate.

Loosen the camshaft sprockets.

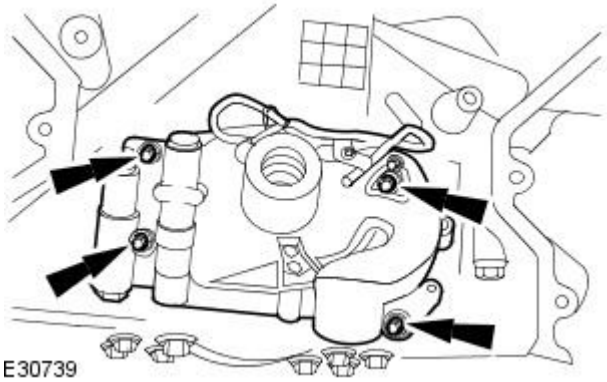


**21.** Remove the oil pump.

- Remove and discard the gasket.

## Installation

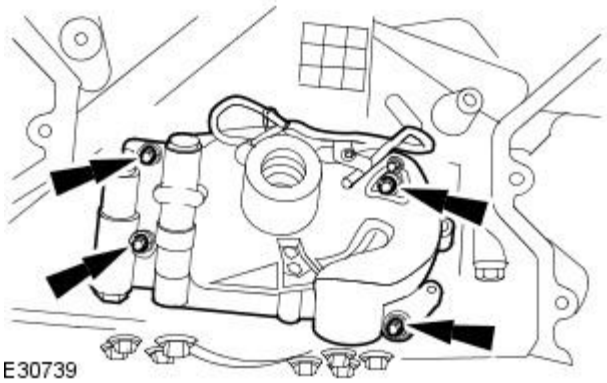


**1.** Install the oil pump.

- Install a new gasket.
- Tighten to 12 Nm.

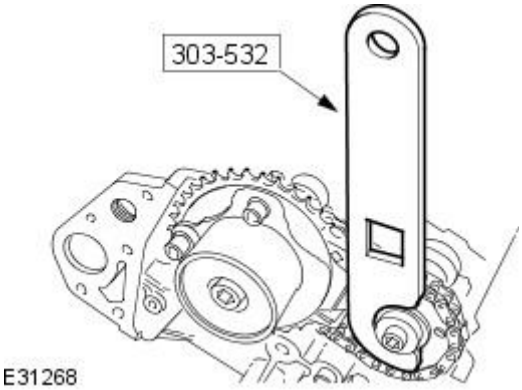


**2.** Install the special tool to the exhaust camshaft sprocket.

- Reposition the camshaft sprockets for the most advantageous position for use of the tool.

GETtheMANUALS.org

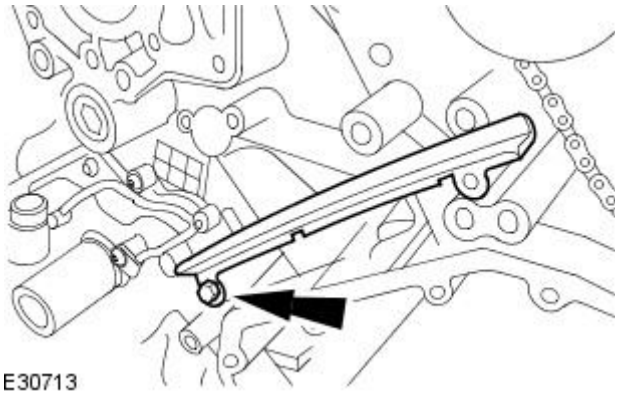


**3.** Install the primary timing chain tensioner guide.

- Tighten to 12 Nm.

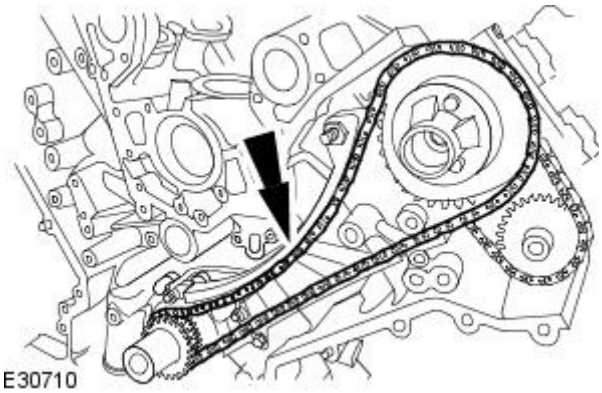


**4.** CAUTION: Make sure the timing chain slack is on the tensioned side of the timing chain.

Install the primary timing chain.

- Install the primary chain over the crankshaft sprocket and the intake sprocket.

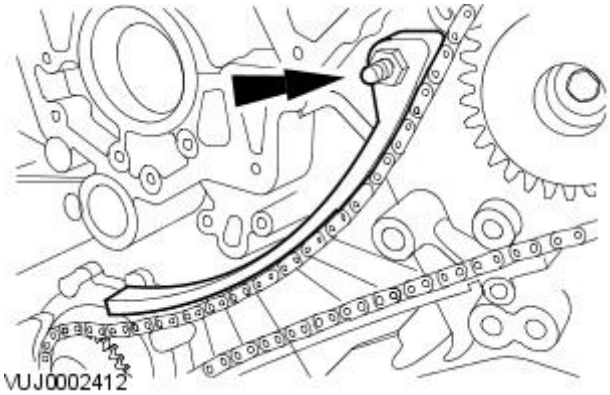


**5.** Install the primary timing chain tensioner guide.

- Tighten to 12 Nm.

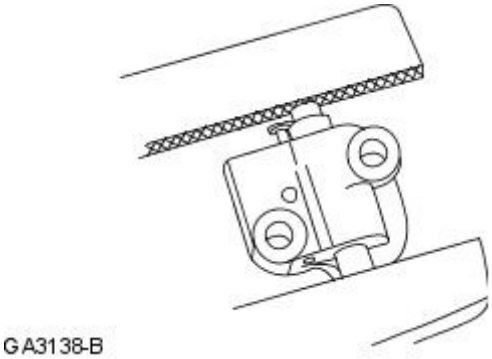


**6.** CAUTION: Use suitable protective covers on the vice jaws to protect the timing chain tensioner.

Secure the left-hand timing chain tensioner in the vice jaws.

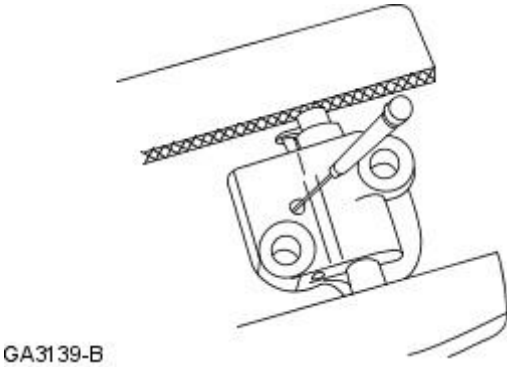


**7.** CAUTION: During timing chain tensioner compression, do not release the ratchet stem until the timing chain tensioner piston is fully bottomed in its bore or damage to the ratchet stem will result.

Using a suitable tool, hold the left-hand timing chain tensioner ratchet lock mechanism away from the ratchet stem.

GETtheMANUALS.org

**8.** NOTE: The timing chain tensioner piston should retract with minimal force. If binding occurs, reposition the timing chain tensioner to eliminate

side loading.

Slowly compress the left-hand timing chain tensioner.

**9.** NOTE: The retaining tool must remain in the timing chain tensioner until the timing chain tensioner is installed to the engine with the piston bottomed in the bore.

Using a suitable tool, retain the left-hand timing chain tensioner piston.

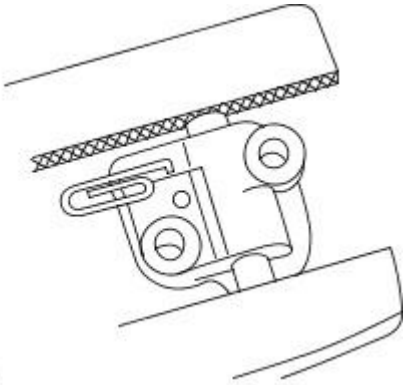

GA3140-A

**10.** Install the primary timing chain tensioner assembly.

- Tighten to 12 Nm.

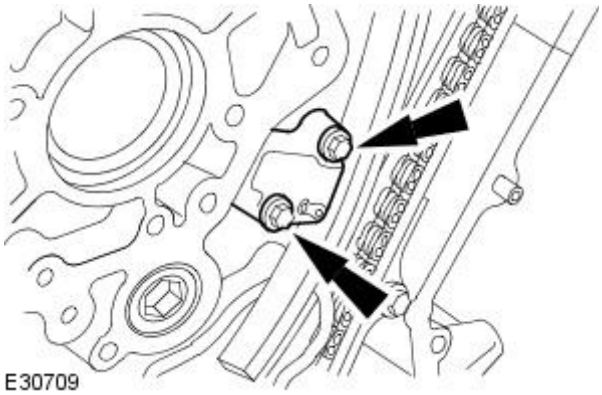

E30709

**11.** Release the tension in the left-hand timing chain tensioner.

- Remove the retaining tool.

**12.** CAUTION: While applying the opposing force to sprocket and chain, tighten the sprocket bolt.

Using the special tool, apply force to the tool in an anti-clockwise direction to tension the primary timing chain on its drive side.

- Tighten to 120 Nm.

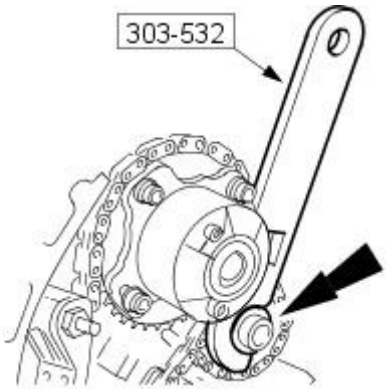


E31269

**13.** CAUTION: While applying the opposing force to sprocket and chain, tighten the sprocket bolt.

Using the special tool, apply force to the tool in an anti-clockwise direction.

- Tighten to 120 Nm.

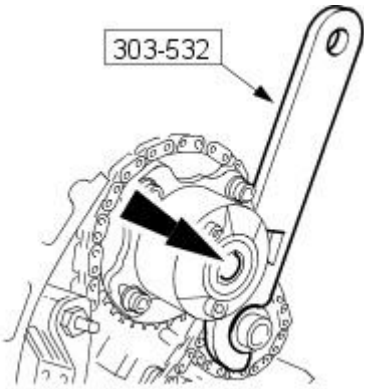


E31270

GETtheMANUALS.org

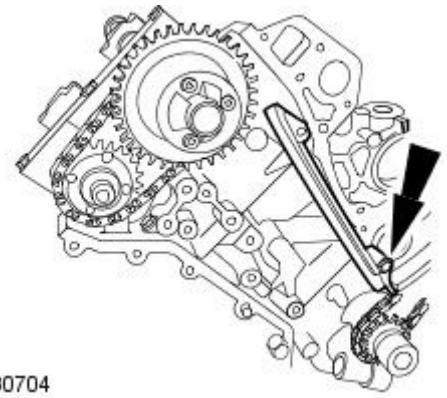

E30704

**14.** Install the primary timing chain guide.

- Tighten to 12 Nm.

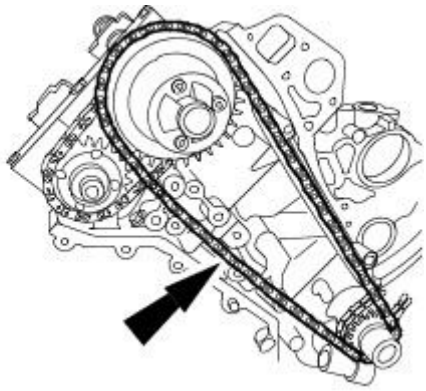

E30703

**15.** CAUTION: Make sure the timing chain slack is on the tensioned side of the timing chain.

Install the primary timing chain.

- Install the primary chain over the crankshaft sprocket and the intake sprocket.

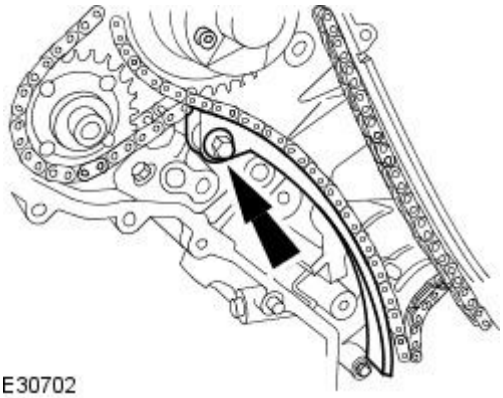

E30702

**16.** Install the primary timing chain tensioner guide.

- Tighten to 12 Nm.

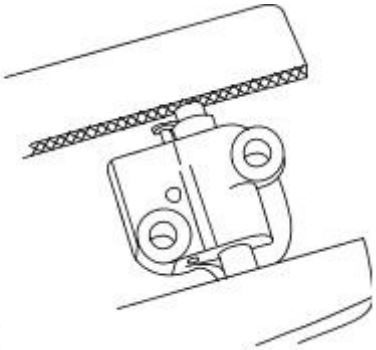

GA3138-B

**17.** CAUTION: Use suitable protective covers on the vice jaws to protect the timing chain tensioner.

Secure the right-hand timing chain tensioner in the vice jaws.

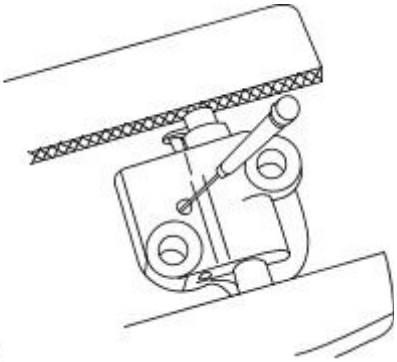

GA3139-B

**18.** CAUTION: During timing chain tensioner compression, do not release the ratchet stem until the timing chain tensioner piston is fully bottomed in its bore or damage to the ratchet stem will result.

Using a suitable tool, hold the right-hand timing chain tensioner ratchet lock mechanism away from the ratchet stem.

GETtheMANUALS.org

**19.** NOTE: The timing chain tensioner piston should retract with minimal force. If binding occurs, reposition the timing chain tensioner to eliminate

side loading.

Slowly compress the right-hand timing chain tensioner.

**20.** NOTE: The retaining tool must remain in the timing chain tensioner until the timing chain tensioner is installed to the engine with the piston bottomed in the bore.

Using a suitable tool, retain the right-hand timing chain tensioner piston.

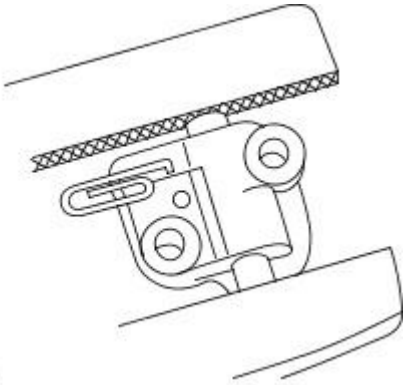

GA3140-A

**21.** Install the primary timing chain tensioner assembly.

- Tighten to 12 Nm.

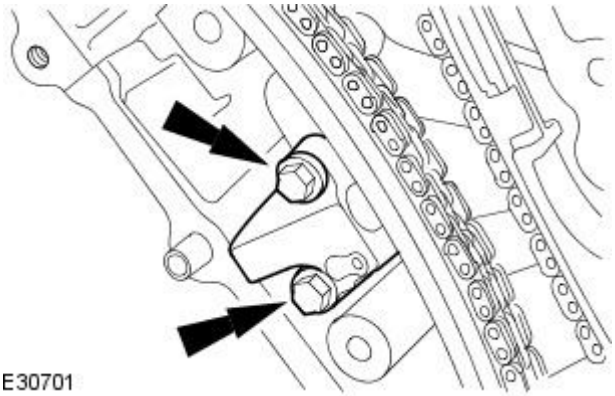

E30701

**22.** Release the tension in the left-hand timing chain tensioner.

- Remove the retaining tool.

**23.** CAUTION: While applying the opposing force to sprocket and chain, tighten the sprocket bolt.

Using the special tool, apply force to the tool in an anti-clockwise direction to tension the primary timing chain on its drive side.

- Tighten to 120 Nm.

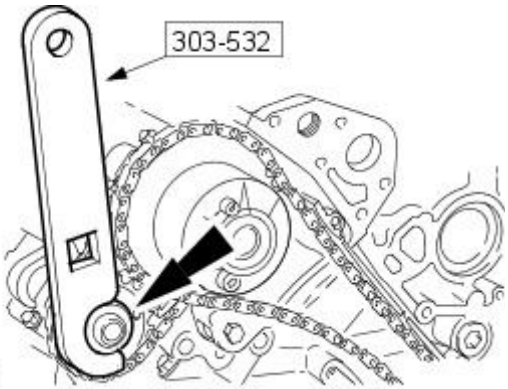


E31271

**24.** CAUTION: While applying the opposing force to sprocket and chain, tighten the sprocket bolt.

Using the special tool, apply force to the tool in an anti-clockwise direction.

- Tighten to 120 Nm.

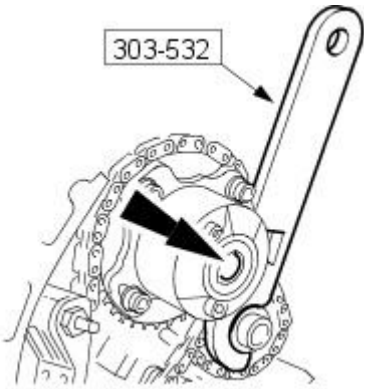


E31270

GETtheMANUALS.org

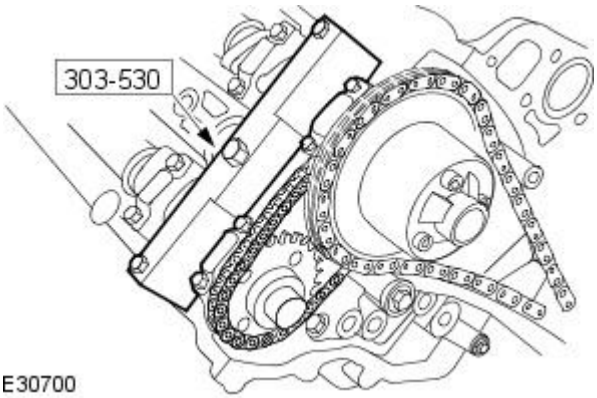


**25.** Remove the special tool from the right-hand cylinder head.

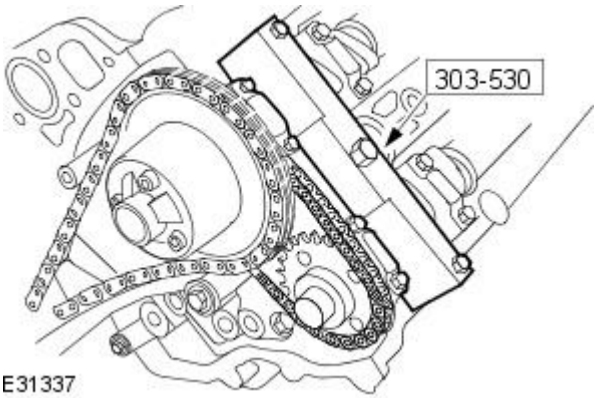


**26.** Remove the special tool from the left-hand cylinder head.

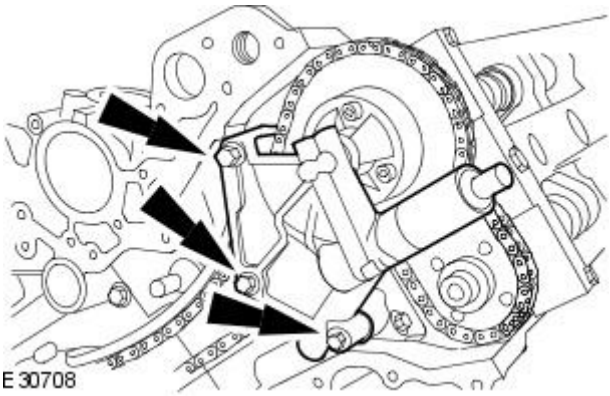


**27.** Install the left-hand variable camshaft timing oil control unit housing.

- Install new O-ring seals.
- Tighten to 22 Nm.

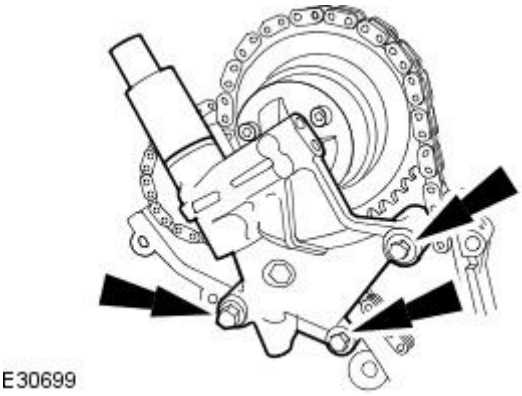


**28.** Install the right-hand variable camshaft timing oil control unit housing.

- Install new O-ring seals.
- Tighten to 22 Nm.

**29.** Install the engine front cover.
For additional information, refer to: Engine Front Cover - VIN Range: M45255->N52047 (303-01B Engine - V8 4.2L Petrol/V8 S/C 4.2L Petrol, In-vehicle Repair).

GETtheMANUALS.org

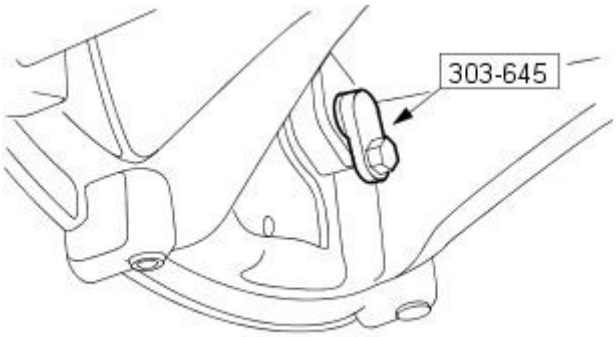


VUJ0002400

**30.** Remove the special tool.

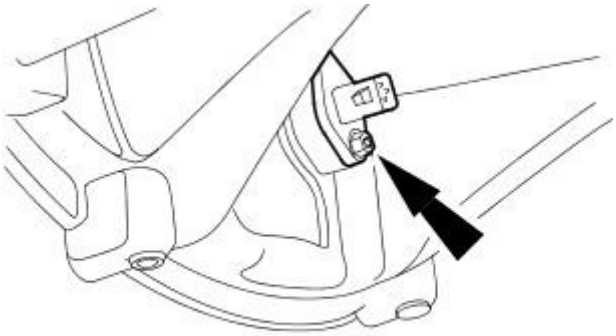

E30694

**31.** Install the CKP sensor.

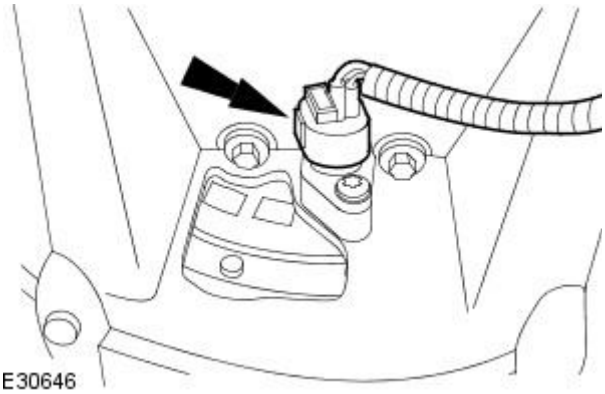

E30646

**32.** Connect the CKP sensor electrical connector.

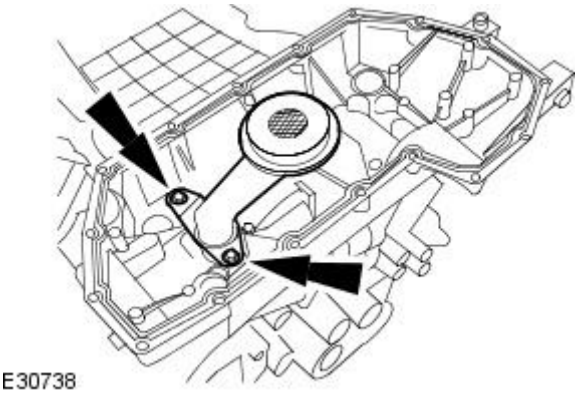

E30738

**33.** Install the oil strainer.

- Install new O-ring seals.
- Tighten to 12 Nm.

**34.** Install the oil pan.
For additional information, refer to: Oil Pan (303-01B Engine - V8 4.2L Petrol/V8 S/C 4.2L Petrol, In-vehicle Repair).

GETtheMANUALS.org

# Engine - V8 4.2L Petrol / V8 S/C 4.2L Petrol - Secondary Timing Chain Tensioner

In-vehicle Repair

| Special Tool(s) | |
|---|---|
| 303-1077A E76151 | 12mm Ribe bit socket<br><br>303-1077A |
| 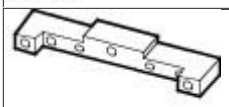 303-530 | Camshaft setting tool<br><br>303-530 |
| DWST021 | Timing chain tensioning tool<br><br>303-532 |
| 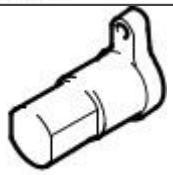 DWST032 | Crankshaft setting, main tool<br><br>303-645 |

## Removal

1. Remove the air deflector. For additional information, refer to: Air Deflector (501-02 Front End Body Panels, Removal and Installation).
2. Disconnect the crankshaft position (CKP) sensor electrical connector.

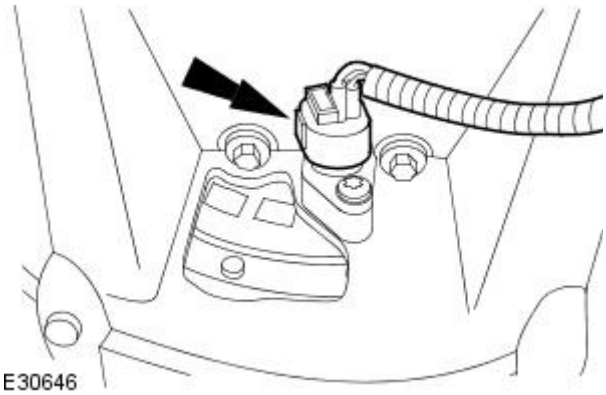

E30646

3. Remove the CKP sensor.

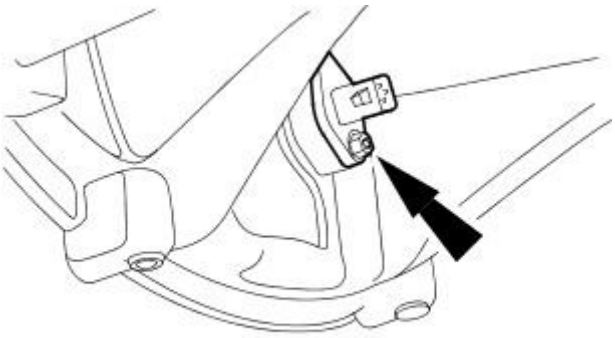

E30694

GETtheMANUALS.org

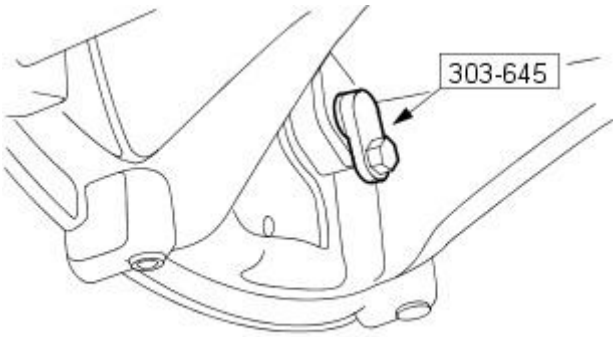


VUJ0002400

**4.** Install the special tool.

**5.** Remove the valve cover. For additional information, refer to: (303-01B Engine - V8 4.2L Petrol/V8 S/C 4.2L Petrol)

Valve Cover LH - VIN Range: M45255->N52047 (In-vehicle Repair),
Valve Cover LH - VIN Range: N52048->N99999 (In-vehicle Repair),
Valve Cover RH - VIN Range: M45255->N52047 (In-vehicle Repair),
Valve Cover RH - VIN Range: N52048->N99999 (In-vehicle Repair).

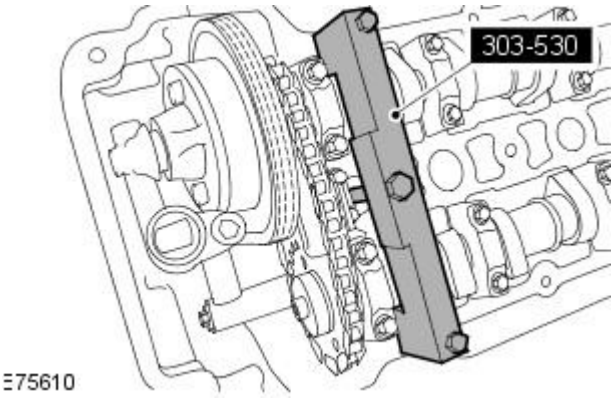


E75610

**6.** NOTE: Left-hand shown, right-hand similar.

Install the special tool to the left-hand cylinder head.

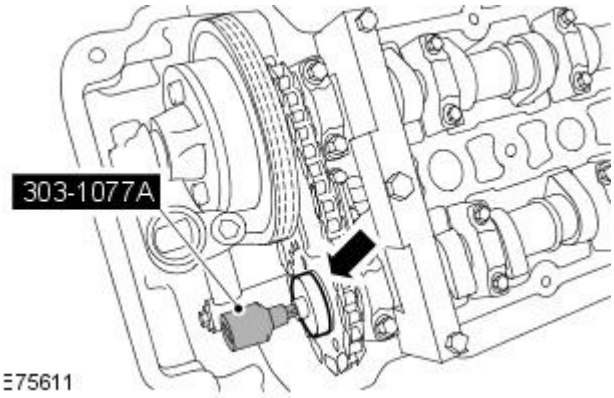


E75611

**7.** NOTE: Left-hand shown, right-hand similar.

Using the special tool, remove the exhaust camshaft sprocket retaining bolt.

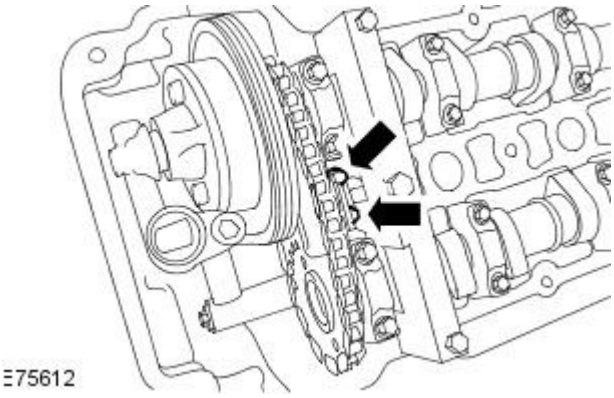

E75612

**8.** NOTE: Left-hand shown, right-hand similar.

Remove the secondary timing chain tensioner retaining bolts.

GETtheMANUALS.org

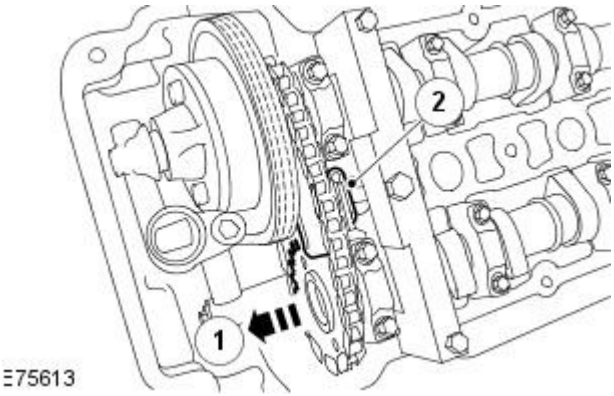


**9.** NOTE: Left-hand shown, right-hand similar.

Remove the secondary timing chain tensioner.

1. Reposition the exhaust camshaft sprocket and secondary timing chain.
2. Remove the secondary timing chain tensioner.

## Installation

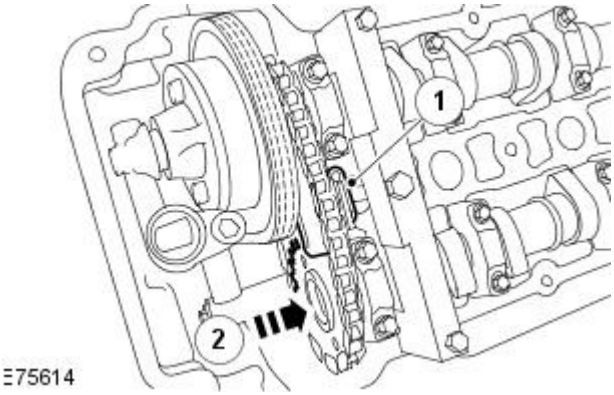


**1.** NOTE: Left-hand shown, right-hand similar.

Install the secondary timing chain tensioner.

1. Install the secondary timing chain tensioner.
2. Reposition the exhaust camshaft sprocket and secondary timing chain.

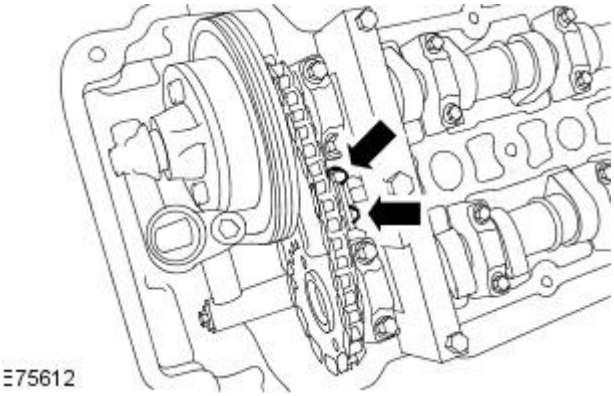


**2.** NOTE: Left-hand shown, right-hand similar.

Install the secondary timing chain tensioner retaining bolts.

- Tighten to 12 Nm.

**3.** Release the tension in the secondary timing chain tensioner.

- Remove the retaining tool.

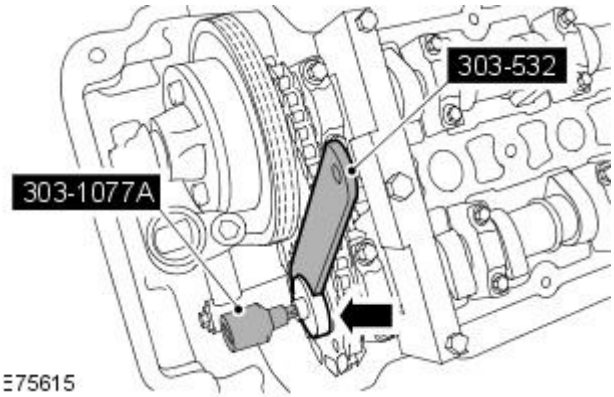


**4.** CAUTION: Make sure that a new bolt is installed.

• NOTE: Left-hand shown, right-hand similar.

Using the special tools, install the exhaust camshaft sprocket retaining bolt.

- Tighten to 20 Nm + 90 deg.

GETtheMANUALS.org

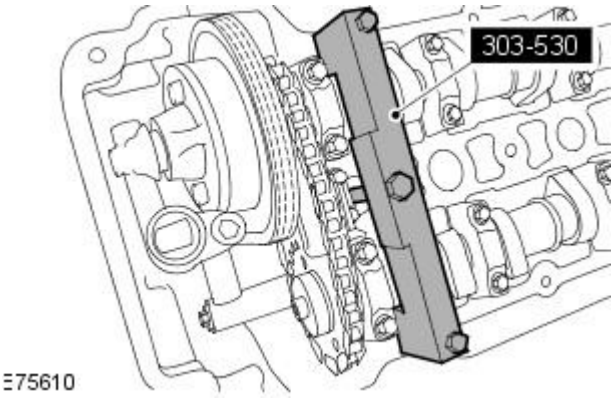

E75610

**5.** NOTE: Left-hand shown, right-hand similar.

Remove the special tool.

**6.** Install the valve cover. For additional information, refer to: (303-01B Engine - V8 4.2L Petrol/V8 S/C 4.2L Petrol)

Valve Cover LH - VIN Range: M45255->N52047 (In-vehicle Repair),
Valve Cover LH - VIN Range: N52048->N99999 (In-vehicle Repair),
Valve Cover RH - VIN Range: M45255->N52047 (In-vehicle Repair),
Valve Cover RH - VIN Range: N52048->N99999 (In-vehicle Repair).

**7.** Remove the special tool.

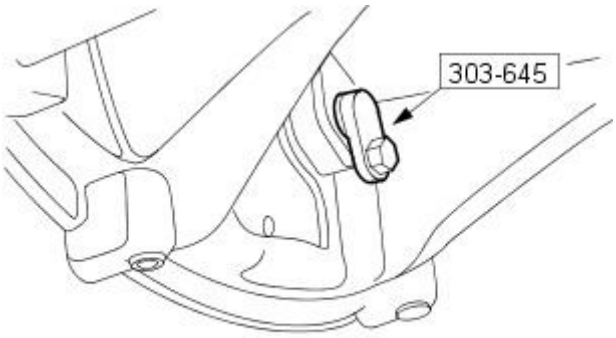

VUJ0002400

**8.** Install the CKP sensor.

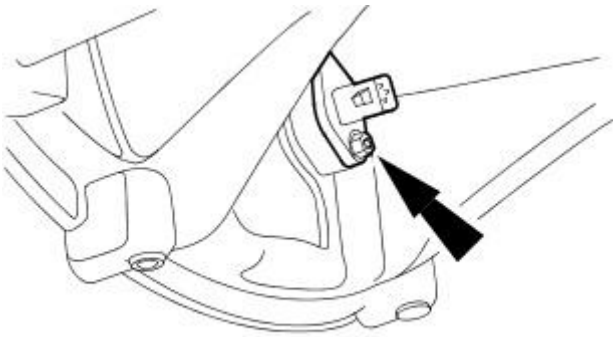
E30694

**9.** Connect the crankshaft position (CKP) sensor electrical connector.

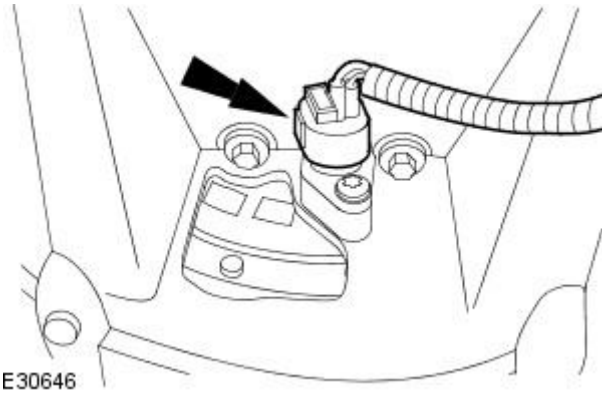
E30646

**10.** Install the air deflector. For additional information, refer to: Air Deflector (501-02 Front End Body Panels, Removal and Installation).

GETtheMANUALS.org

# Engine - V8 4.2L Petrol/V8 S/C 4.2L Petrol - Timing Drive ComponentsVIN Range: M45255->N52047

In-vehicle Repair

| Special Tool(s) | |
|---|---|
| 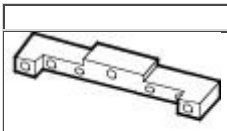 303-530 | Camshaft setting tool<br><br>303-530 |
| 303-532 | Timing chain tensioning tool<br><br>303-532 |
| 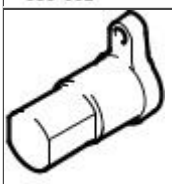 303-645 | Crankshaft setting tool<br><br>303-645 |

## Removal

All vehicles

1. Remove the engine front cover. For additional information, refer to: Engine Front Cover - VIN Range: M45255->N52047 (303-01B Engine - V8 4.2L Petrol/V8 S/C 4.2L Petrol, In-vehicle Repair).
2. Remove the spark plugs.
3. Remove the air deflector. For additional information, refer to: Air Deflector (501-02 Front End Body Panels, Removal and Installation).
4. Disconnect the crankshaft position sensor electrical connector.

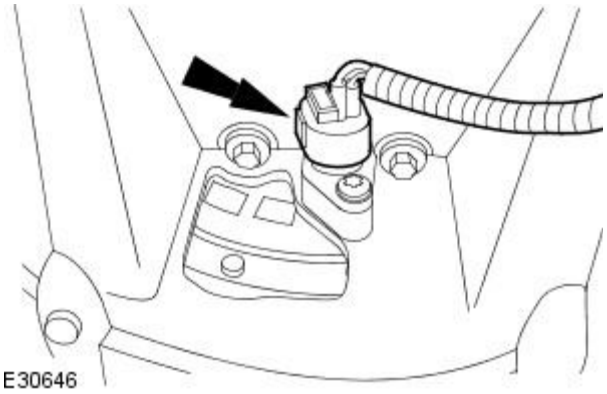

E30646

5. Remove the crankshaft position sensor.

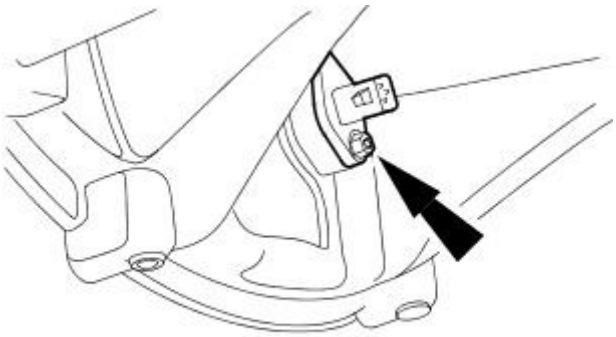

E30694

GETtheMANUALS.org

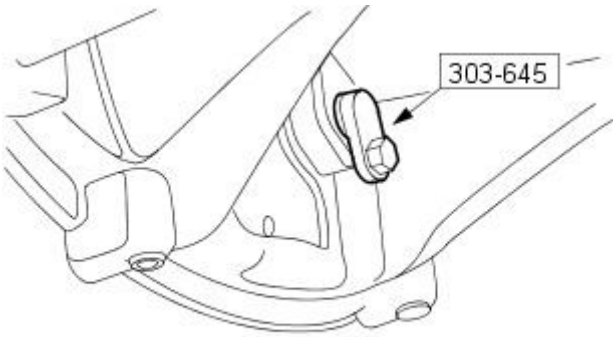


VUJ0002400

**6.** CAUTIONS:

Make sure the spark plugs are removed to enable the engine to rotate freely.

Do not rotate the crankshaft counterclockwise. The timing chains may bind causing engine damage.

Rotate the crankshaft clockwise to position the engine to top dead center (TDC) No. 1 cylinder

Install the special tool 303-645.

Vehicles without supercharger

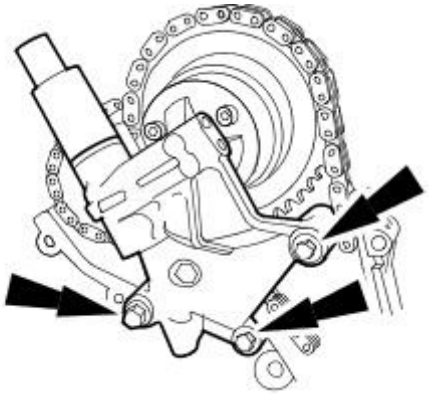

E30699

**7.** Remove the right-hand variable camshaft timing oil control unit housing.

- Remove and discard the O-ring seals.

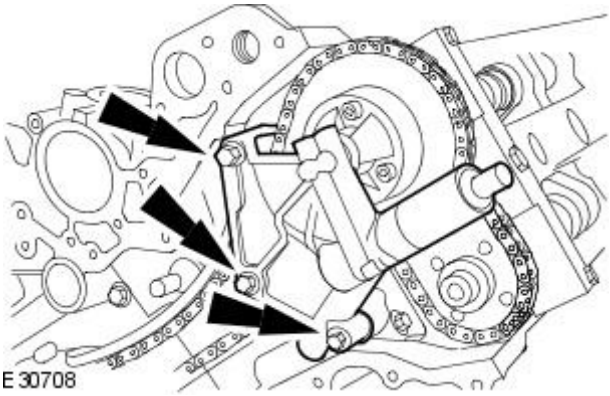

E30708

**8.** Remove the left-hand variable camshaft timing oil control unit housing.

- Remove and discard the O-ring seals.

All vehicles

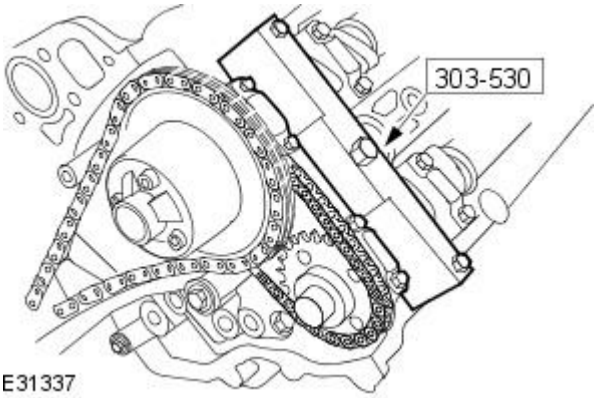


E31337

**9.** Install the special tool to the left-hand cylinder head.

GETtheMANUALS.org

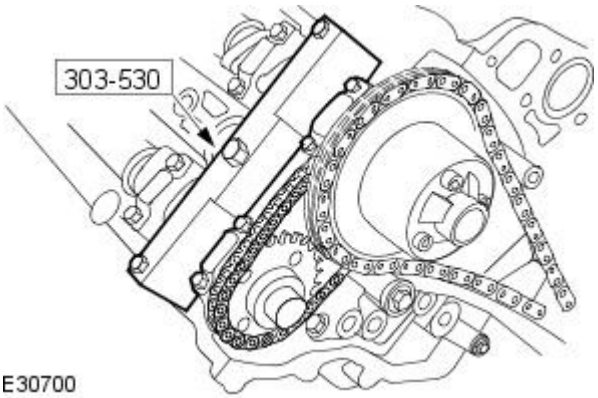

E30700

**10.** Install the special tool to the Right-hand cylinder head.

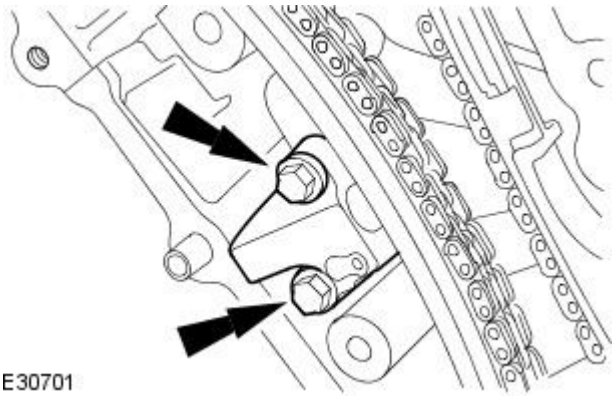
E30701

**11.** Remove the primary timing chain tensioner assembly.

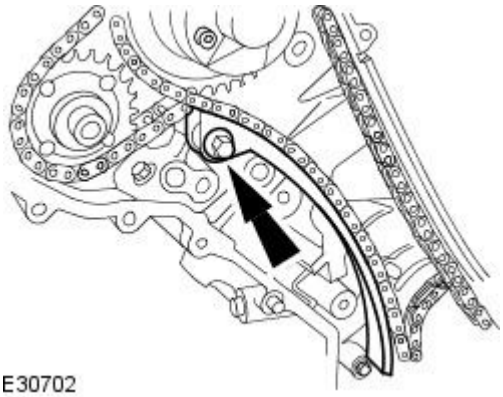
E30702

**12.** Remove the primary timing chain tensioner guide.

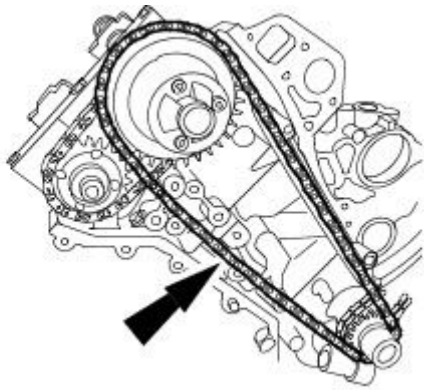
E30703

**13.** Remove the primary timing chain.

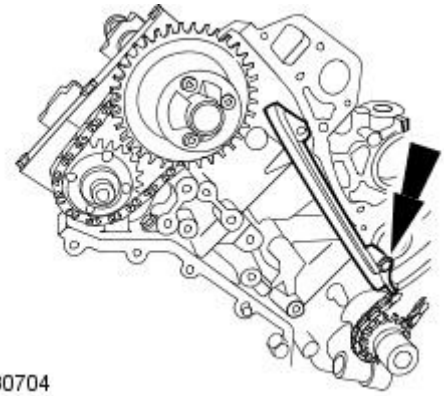
E30704

**14.** Remove the primary timing chain guide.

GETtheMANUALS.org

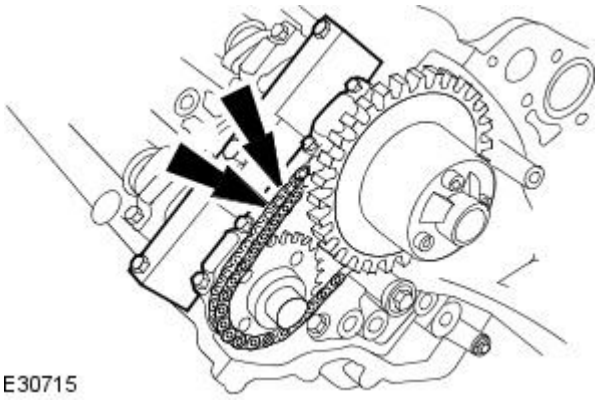


**15.** Remove the secondary timing chain tensioner retaining bolts.

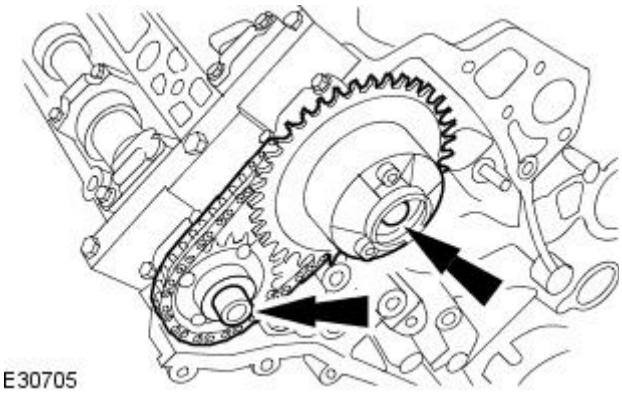


**16.** Remove the camshaft sprockets.

- Remove the secondary timing chain tensioner and secondary timing chain from the camshaft sprockets.

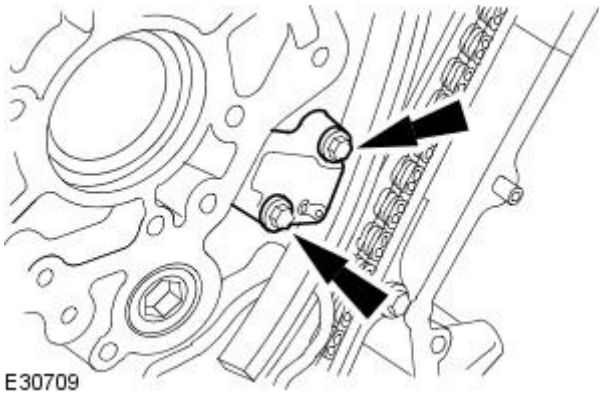


**17.** Remove the primary timing chain tensioner assembly.

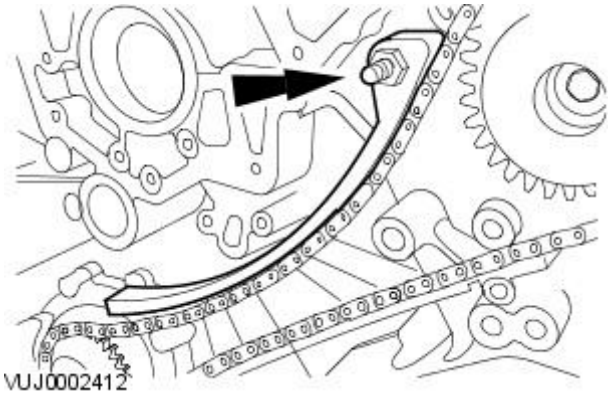


**18.** Remove the primary timing chain tensioner guide.

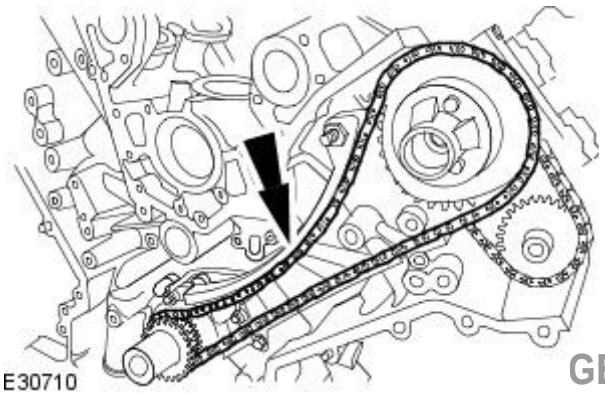


**19.** Remove the primary timing chain.

GETtheMANUALS.org

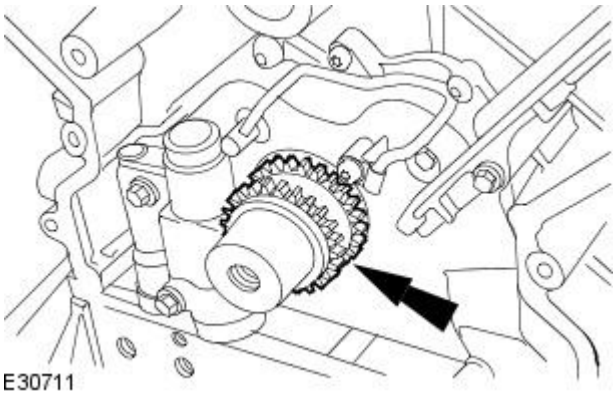


**20.** Remove the crankshaft sprocket.

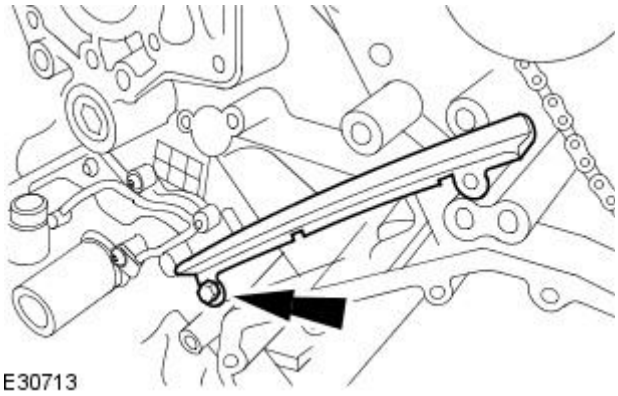


**21.** Remove the primary timing chain tensioner guide.

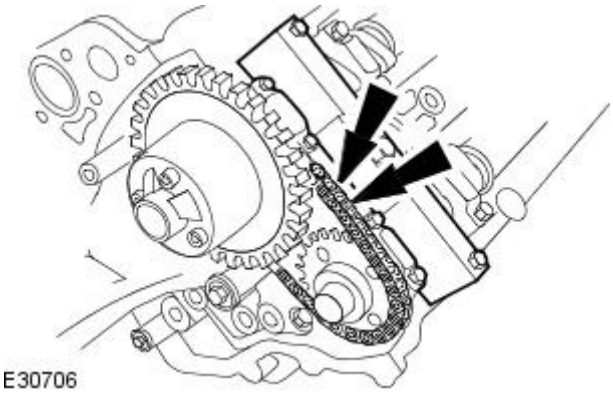


**22.** Remove the secondary timing chain tensioner retaining bolts.

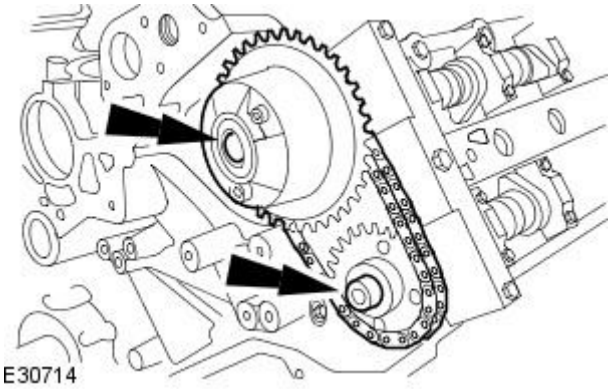


**23.** Remove the camshaft sprockets.

- Remove the secondary timing chain tensioner and secondary timing chain from the camshaft sprockets.

## Installation

All vehicles

GETtheMANUALS.org

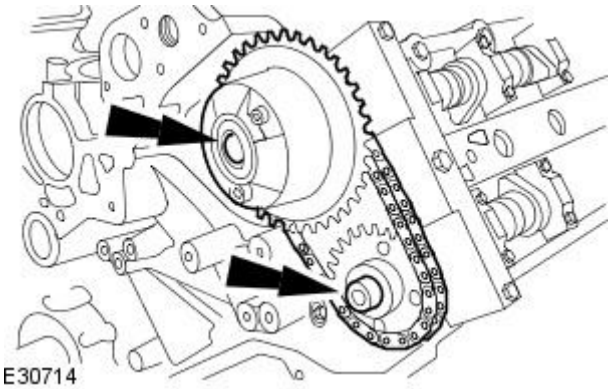
E30714

**1.** CAUTIONS:

Do not tighten the camshaft sprocket retaining bolts.

Make sure the secondary timing chain and camshaft sprockets are free to rotate.

Install the camshaft sprockets.

- Install the secondary timing chain tensioner and secondary timing chain to the camshaft sprockets.

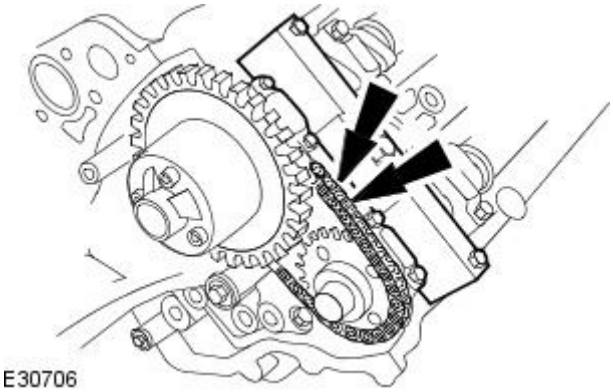
E30706

**2.** Install the secondary timing chain tensioner retaining bolts.

- Tighten to 12 Nm.

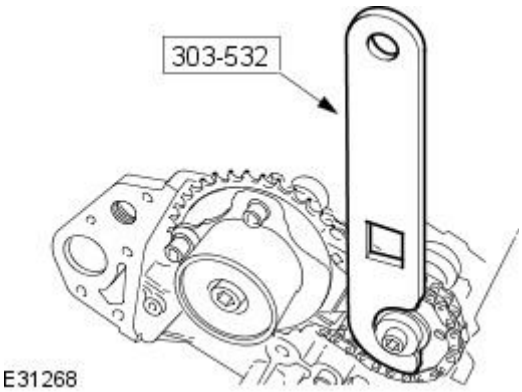

E31268

**3.** Install the timing chain tensioning tool 303-532 to the exhaust camshaft sprocket.

- Reposition the camshaft sprockets for the most advantageous position for use of the tool.

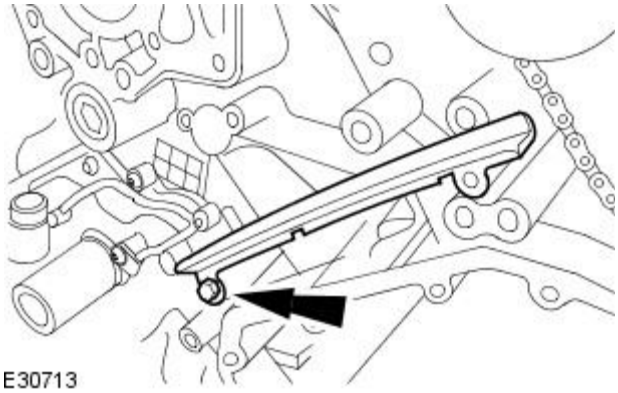
E30713

**4.** Install the primary timing chain tensioner guide.

- Tighten to 12 Nm.

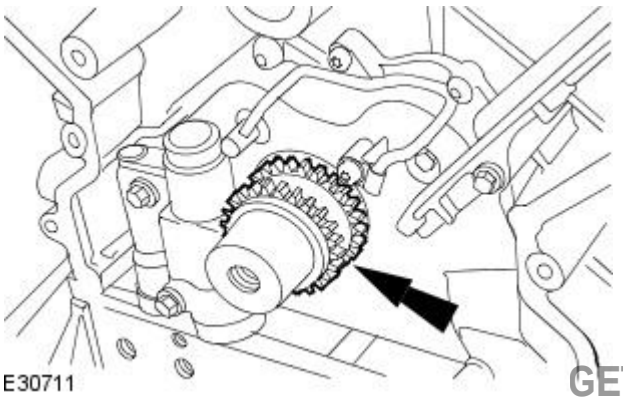
E30711

**5.** Install the crankshaft sprocket.

GETtheMANUALS.org

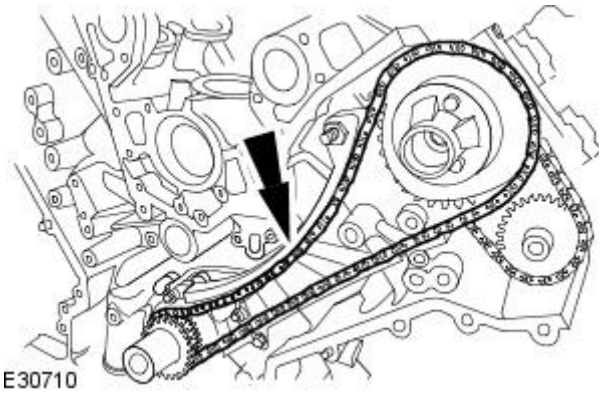


**6.** CAUTION: Make sure the timing chain slack is on the tensioned side of the timing chain.

Install the primary timing chain.

- Install the primary chain over the crankshaft sprocket and the intake sprocket.

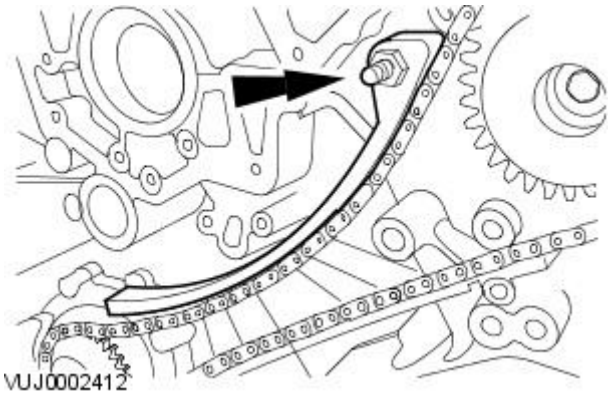


**7.** Install the primary timing chain tensioner guide.

- Tighten to 12 Nm.

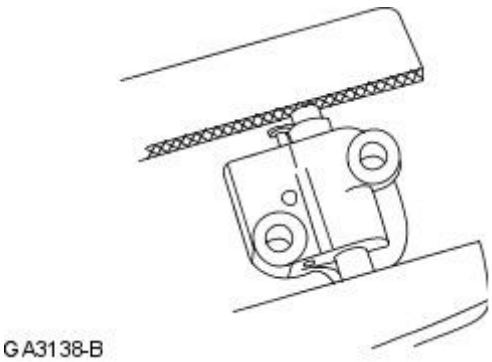


**8.** CAUTION: Use suitable protective covers on the vice jaws to protect the timing chain tensioner.

Secure the left-hand timing chain tensioner in the vice jaws.

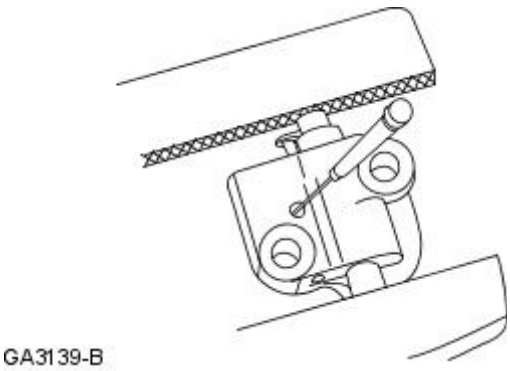


**9.** CAUTION: During timing chain tensioner compression, do not release the ratchet stem until the timing chain tensioner piston is fully bottomed in its bore or damage to the ratchet stem will result.

Using a suitable tool, hold the left-hand timing chain tensioner ratchet lock mechanism away from the ratchet stem.

**10.** NOTE: The timing chain tensioner piston should retract with minimal force. If binding occurs, reposition the timing chain tensioner to eliminate side loading.

Slowly compress the left-hand timing chain tensioner.

GETtheMANUALS.org

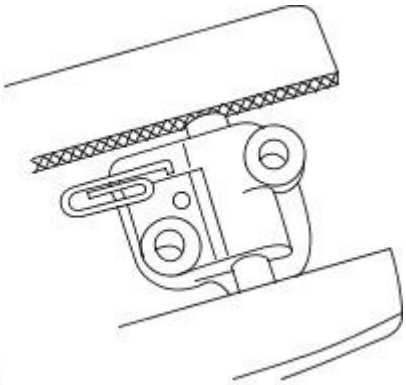

GA3140-A

**11.** NOTE: The retaining tool must remain in the timing chain tensioner until the timing chain tensioner is installed to the engine with the piston bottomed in the bore.

Using a suitable tool, retain the left-hand timing chain tensioner piston.

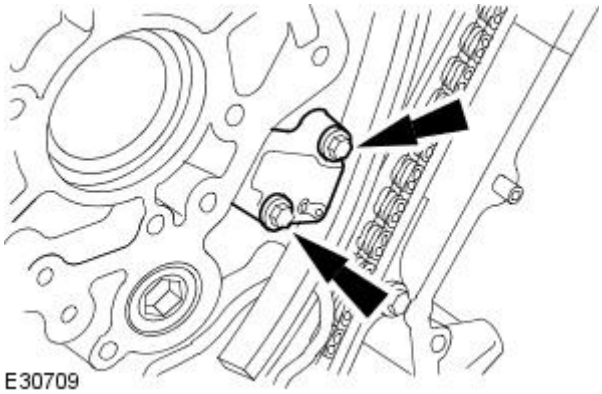

E30709

**12.** Install the primary timing chain tensioner assembly.

- Tighten to 12 Nm.

**13.** Release the tension in the left-hand timing chain tensioner.

- Remove the retaining tool.

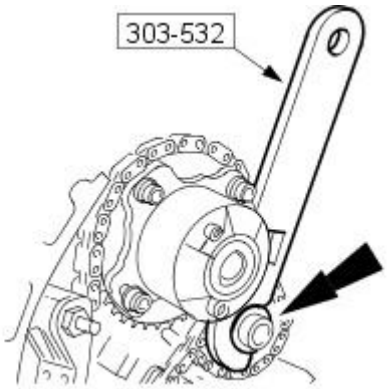


E31269

**14.** CAUTIONS:

While applying the opposing force to sprocket and chain, tighten the sprocket bolt.

Make sure that a new bolt is installed.

Using the special tool apply force to the tool in an anti-clockwise direction to tension the primary timing chain on its drive side.

- Tighten to 20 Nm + 90 deg.

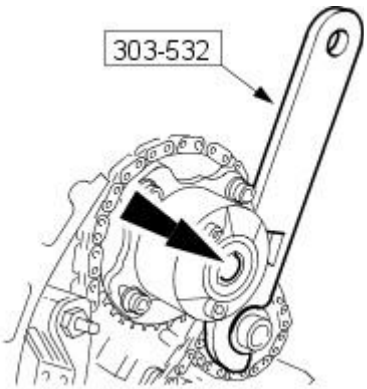


E31270

**15.** CAUTIONS:

While applying the opposing force to sprocket and chain, tighten the sprocket bolt.

Make sure that a new bolt is installed.

Using the special tool apply force to the tool in an anti-clockwise direction.

- Tighten to 20 Nm + 90 deg.

GETtheMANUALS.org

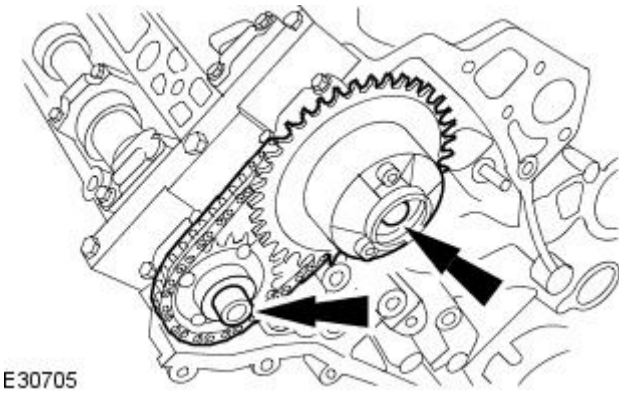

E30705

**16.** CAUTIONS:

Do not tighten the camshaft sprocket retaining bolts.

Make sure the secondary timing chain and camshaft sprockets are free to rotate.

Install the camshaft sprockets.

- Install the secondary timing chain tensioner and secondary timing chain to the camshaft sprockets.

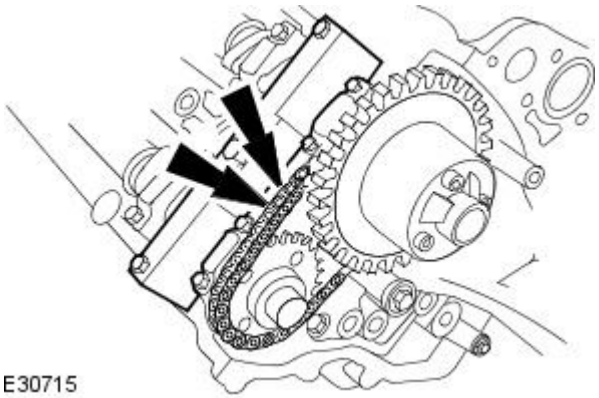

E30715

**17.** Install the secondary timing chain tensioner retaining bolts.

- Tighten to 12 Nm.

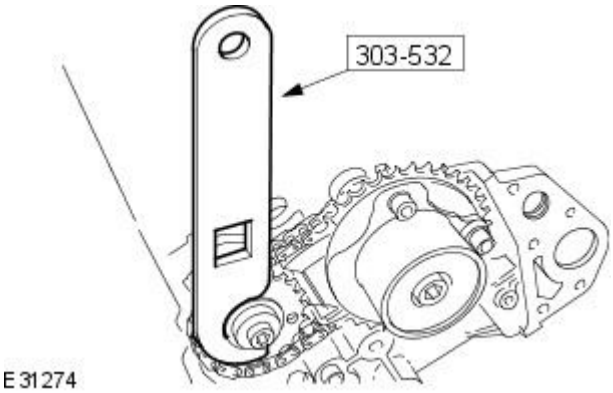


E31274

**18.** Install the timing chain tensioning tool 303-532 to the exhaust camshaft sprocket.

- Reposition the camshaft sprockets for the most advantageous position for use of the tool.

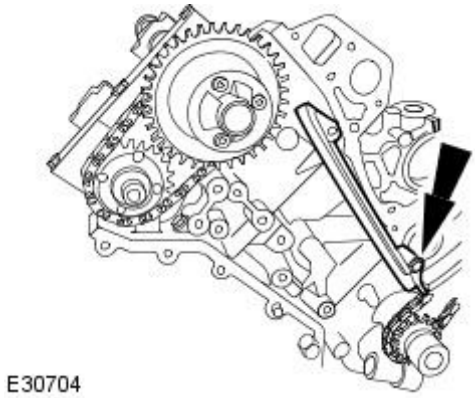

E30704

**19.** Install the primary timing chain guide.

- Tighten to 12 Nm.

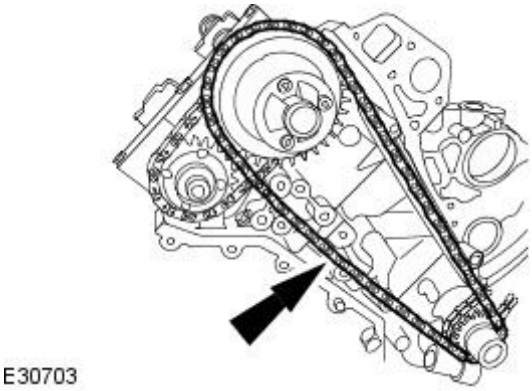

E30703

**20.** CAUTION: Make sure the timing chain slack is on the tensioned side of the timing chain.

Install the primary timing chain.

- Install the primary chain over the crankshaft sprocket and the intake sprocket.

GETtheMANUALS.org

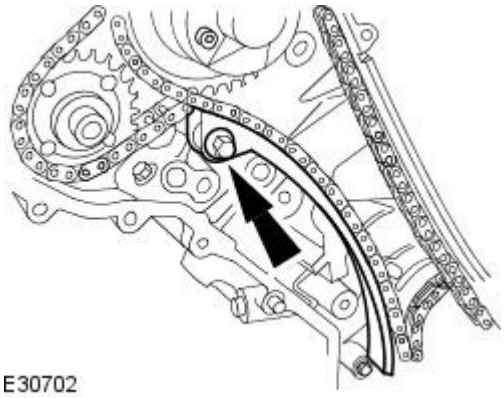

E30702

**21.** Install the primary timing chain tensioner guide.

- Tighten to 12 Nm.

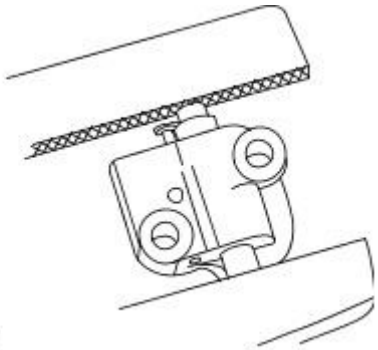

GA3138-B

**22.** CAUTION: Use suitable protective covers on the vice jaws to protect the timing chain tensioner.

Secure the right-hand timing chain tensioner in the vice jaws.

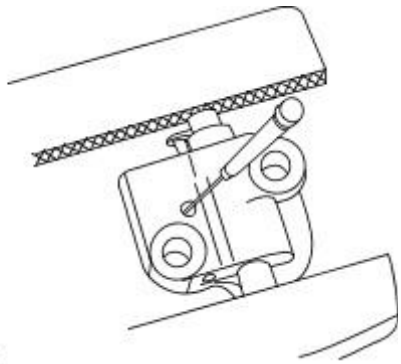

GA3139-B

**23.** CAUTION: During timing chain tensioner compression, do not release the ratchet stem until the timing chain tensioner piston is fully bottomed in its bore or damage to the ratchet stem will result.

Using a suitable tool, hold the right-hand timing chain tensioner ratchet lock mechanism away from the ratchet stem.

**24.** NOTE: The timing chain tensioner piston should retract with minimal force. If binding occurs, reposition the timing chain tensioner to eliminate side loading.

Slowly compress the right-hand timing chain tensioner.

**25.** NOTE: The retaining tool must remain in the timing chain tensioner until the timing chain tensioner is installed to the engine with the piston bottomed in the bore.

Using a suitable tool, retain the right-hand timing chain tensioner piston.

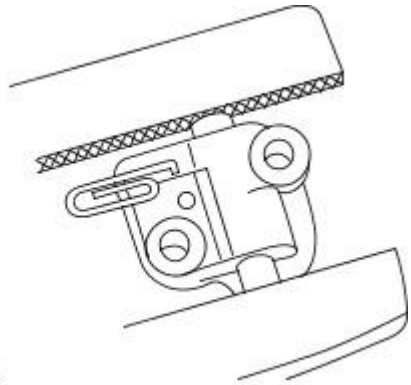

GA3140-A

GETtheMANUALS.org

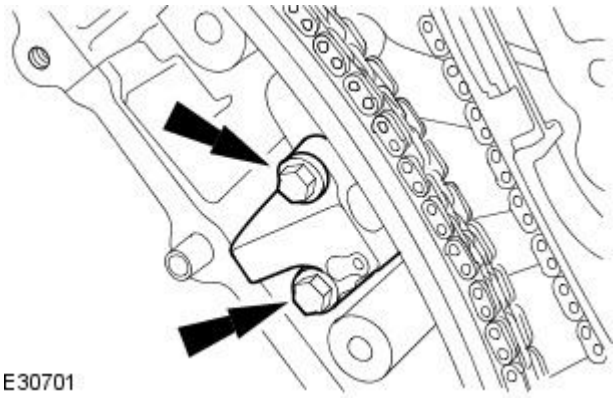


**26.** Install the primary timing chain tensioner assembly.

- Tighten to 12 Nm.

**27.** Release the tension in the right-hand timing chain tensioner.

- Remove the retaining tool.

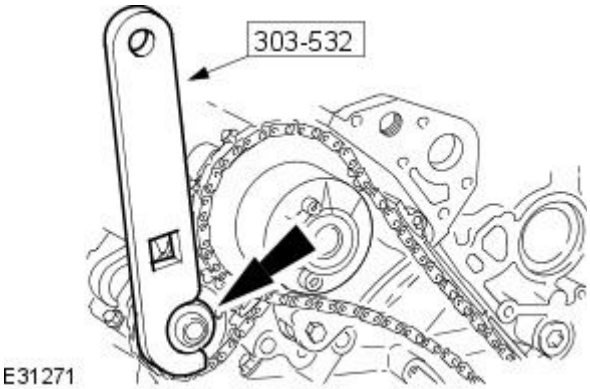


**28.** CAUTIONS:

While applying the opposing force to sprocket and chain, tighten the sprocket bolt.

Make sure that a new bolt is installed.

Using the special tool apply force to the tool in an anti-clockwise direction to tension the primary timing chain on its drive side.

- Tighten to 20 Nm + 90 deg.

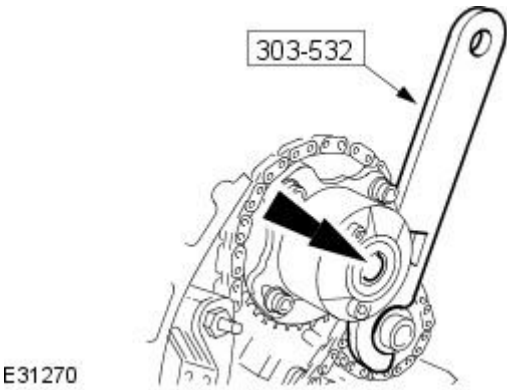


**29.** CAUTIONS:

While applying the opposing force to sprocket and chain, tighten the sprocket bolt.

Make sure that a new bolt is installed.

Using the special tool apply force to the tool in an anti-clockwise direction.

- Tighten to 20 Nm + 90 deg.

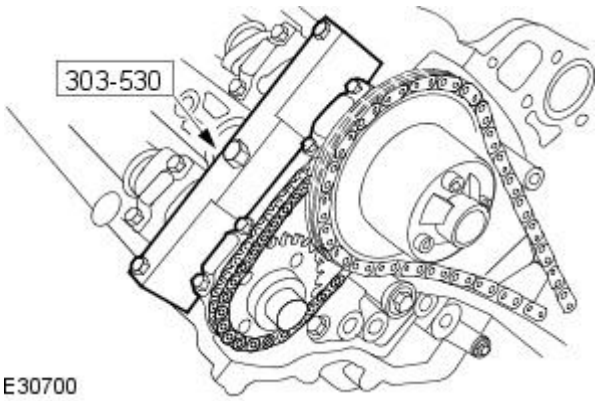


**30.** Remove the special tool to the Right-hand cylinder head.

GETtheMANUALS.org

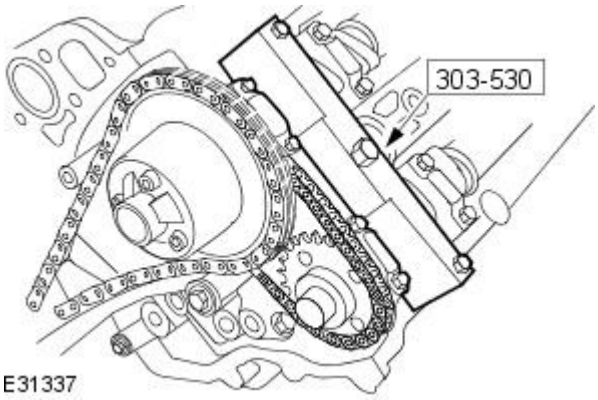

E31337

**31.** Remove the special tool to the left-hand cylinder head.

Vehicles without supercharger

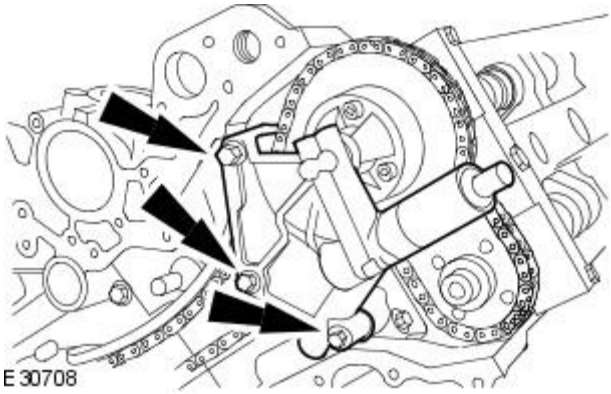
E30708

**32.** Install the left-hand variable camshaft timing oil control unit housing.

- Install new O-ring seals.
- Tighten to 22 Nm.

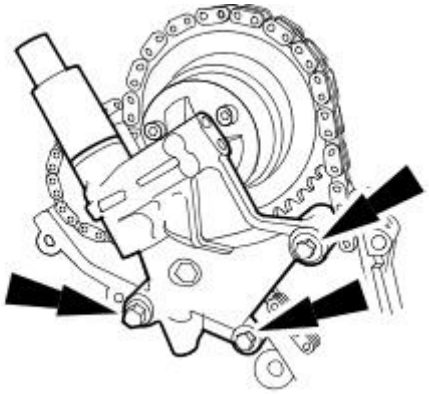
E30699

**33.** Install the right-hand variable camshaft timing oil control unit housing.

- Install new O-ring seals.
- Tighten to 22 Nm.

All vehicles

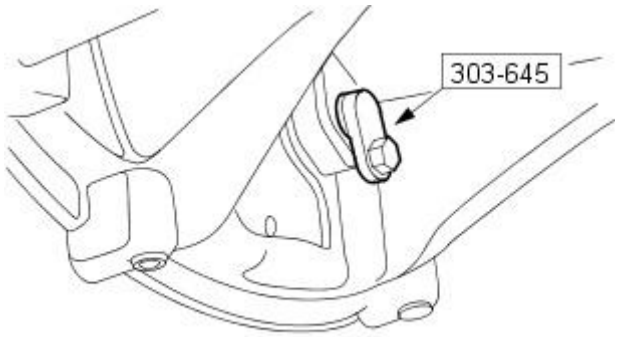

VUJ0002400

**34.** Remove the special tool.

GETtheMANUALS.org

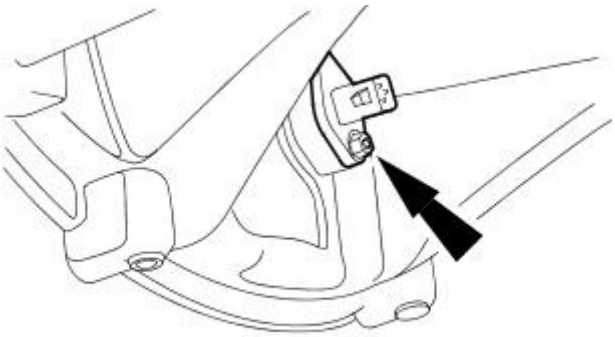

E30694

**35.** Install the crankshaft position sensor.

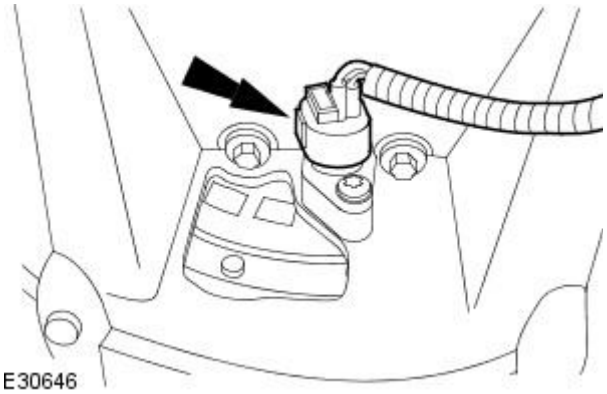

E30646

**36.** Connect the crankshaft position sensor electrical connector.

**37.** Install the air deflector. For additional information, refer to: Air Deflector (501-02 Front End Body Panels, Removal and Installation).

**38.** Install the spark plugs.

**39.** Install the engine front cover. For additional information, refer to: Cylinder Head LH - VIN Range: M45255->N52047 (303-01B Engine - V8 4.2L Petrol/V8 S/C 4.2L Petrol, In-vehicle Repair).

GETtheMANUALS.org

# Engine - V8 4.2L Petrol/V8 S/C 4.2L Petrol - Timing Drive ComponentsVIN Range: N52048->N99999

In-vehicle Repair

| Special Tool(s) | |
|---|---|
| 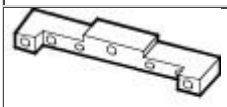 303-530 | Camshaft setting tool<br><br>303-530 |
| 303-532 | Timing chain tensioning tool<br><br>303-532 |
| 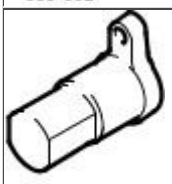 303-645 | Crankshaft setting tool<br><br>303-645 |

## Removal

1. Remove the engine front cover.
   For additional information, refer to: Engine Front Cover - VIN Range: N52048->N99999 (303-01B Engine - V8 4.2L Petrol/V8 S/C 4.2L Petrol, In-vehicle Repair).
2. Remove the spark plugs.
3. Raise the vehicle.
4. Disconnect the crankshaft position (CKP) sensor electrical connector.

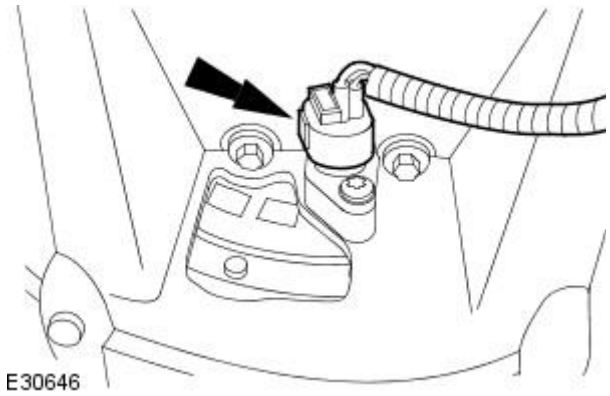

E30646

5. Remove the CKP sensor.

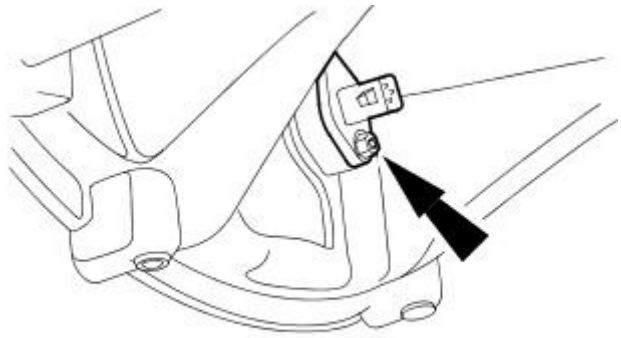

E30694

GETtheMANUALS.org

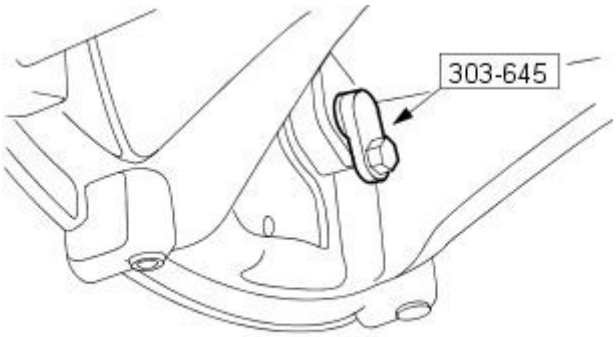


VUJ0002400

**6.** CAUTIONS:

Make sure the spark plugs are removed to enable the engine to rotate freely.

Do not rotate the crankshaft counterclockwise. The timing chains may bind causing engine damage.

Rotate the crankshaft clockwise to position the engine to top dead center (TDC) No. 1 cylinder

Install the special tool 303-645.

**7.** Lower the vehicle.

**8.** Remove the right-hand variable camshaft timing oil control unit housing.

- Remove and discard the O-ring seals.

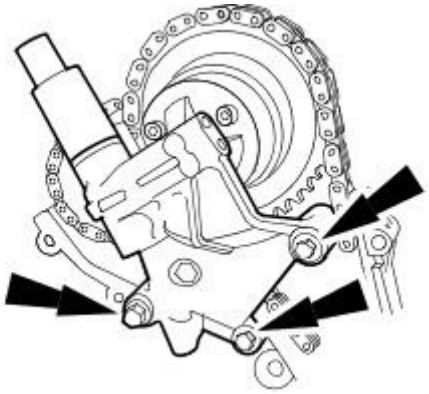

E30699

**9.** Remove the left-hand variable camshaft timing oil control unit housing.

- Remove and discard the O-ring seals.

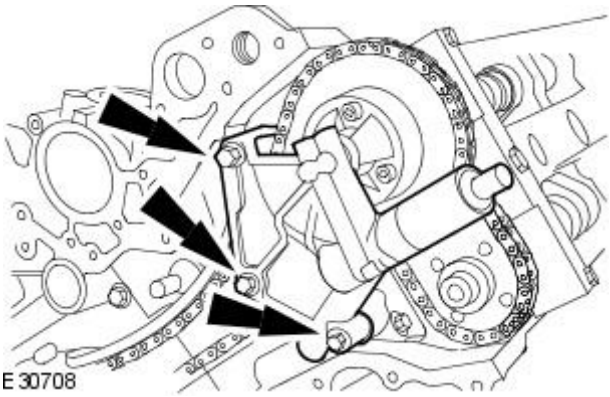

E30708

**10.** Install the special tool to the left-hand cylinder head.

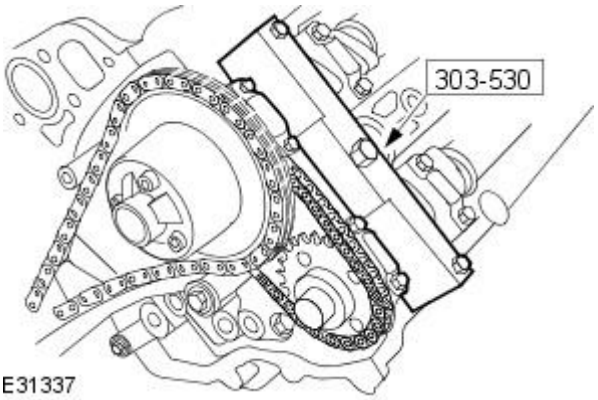


E31337

**11.** Install the special tool to the right-hand cylinder head.

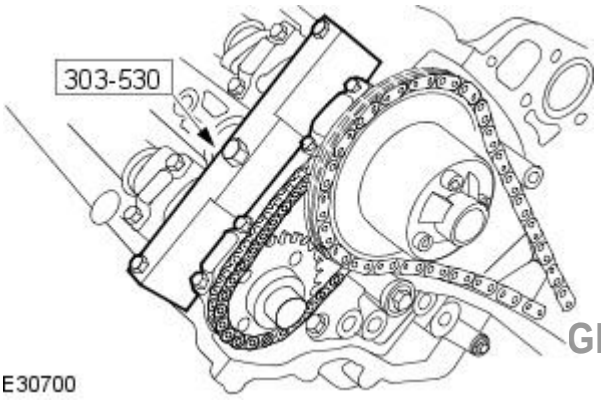


E30700

GETtheMANUALS.org

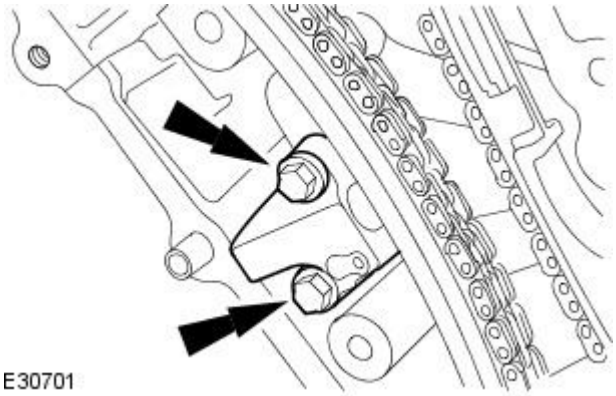
E30701

**12.** Remove the primary timing chain tensioner assembly.

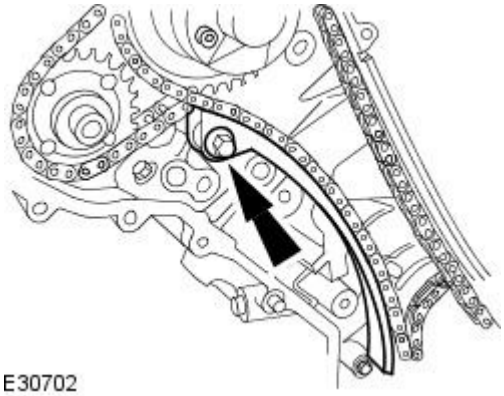
E30702

**13.** Remove the primary timing chain tensioner guide.

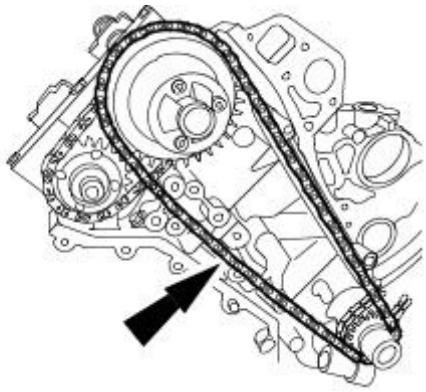
E30703

**14.** Remove the primary timing chain.

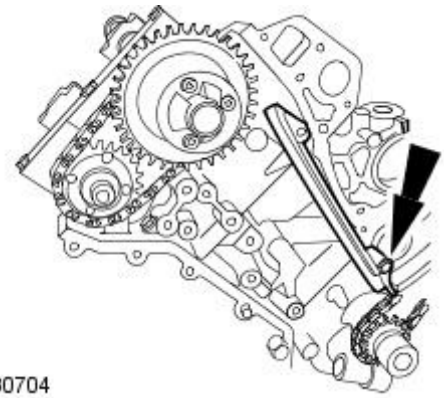
E30704

**15.** Remove the primary timing chain guide.

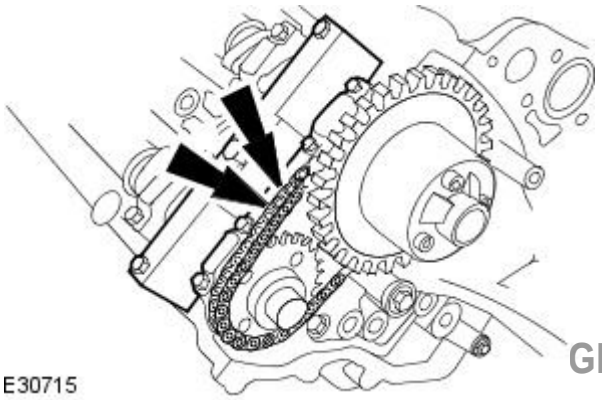
E30715

**16.** Remove the secondary timing chain tensioner retaining bolts.

GETtheMANUALS.org

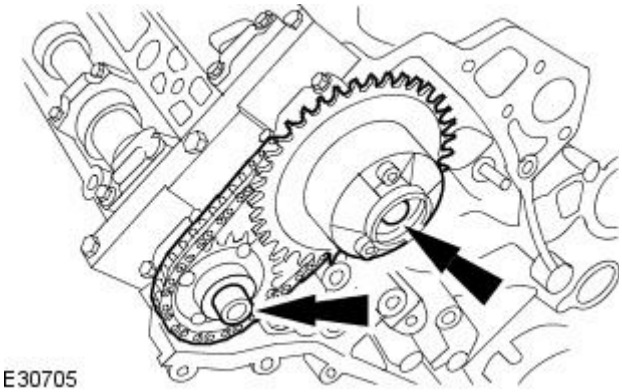


**17.** Remove the camshaft sprockets.

- Remove the secondary timing chain tensioner and secondary timing chain from the camshaft sprockets.

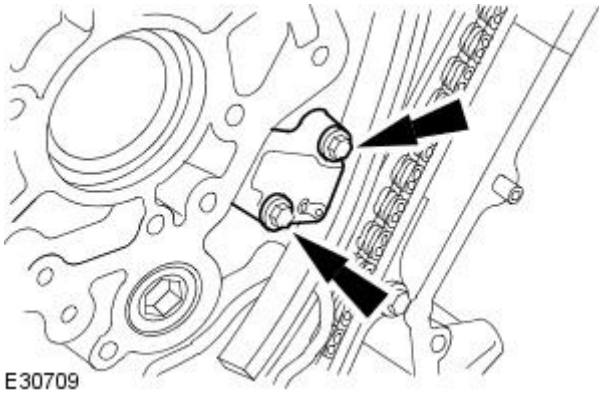


**18.** Remove the primary timing chain tensioner assembly.

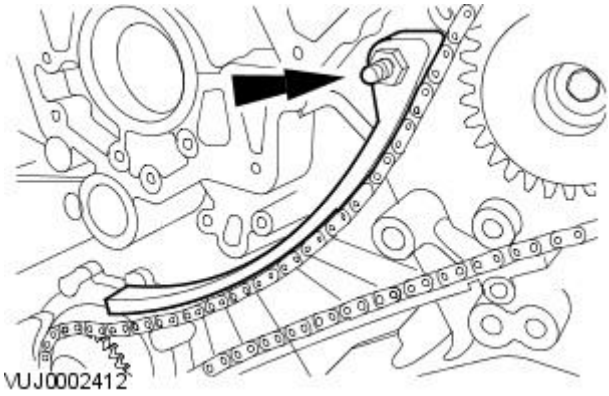


**19.** Remove the primary timing chain tensioner guide.

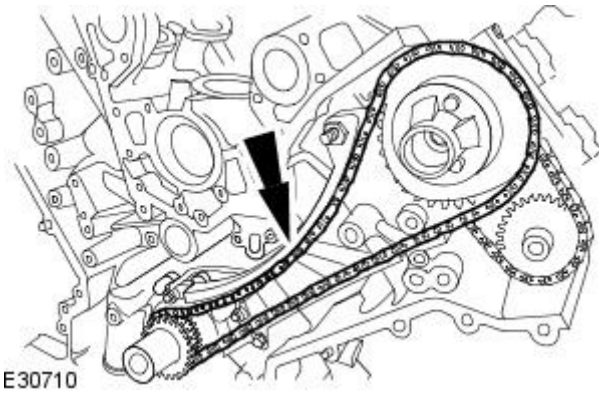


**20.** Remove the primary timing chain.

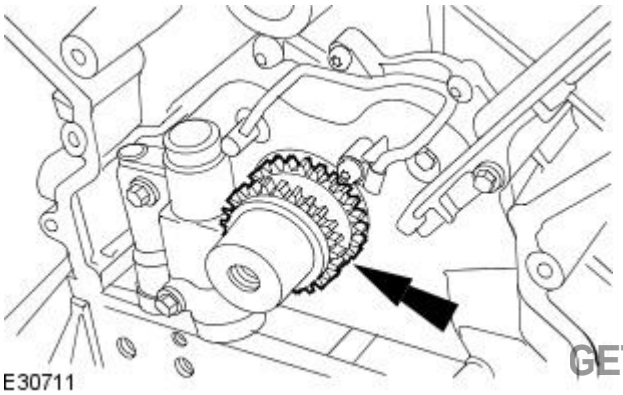


**21.** Remove the crankshaft sprocket.

GETtheMANUALS.org

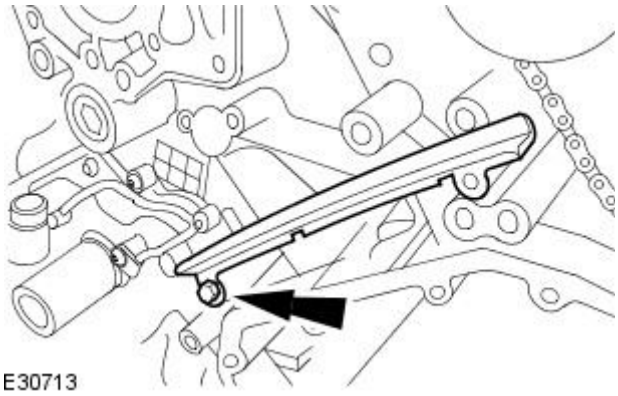


**22.** Remove the primary timing chain tensioner guide.

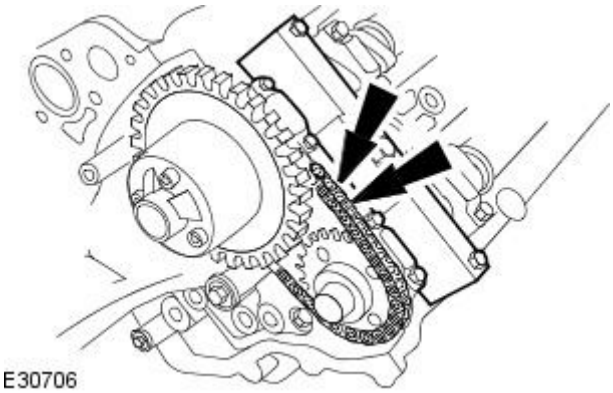


**23.** Remove the secondary timing chain tensioner retaining bolts.

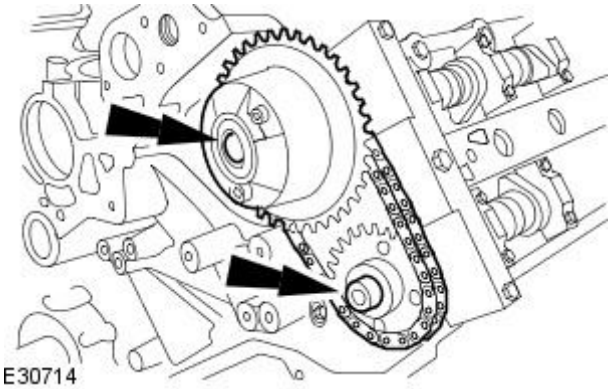


**24.** Remove the camshaft sprockets.

- Remove the secondary timing chain tensioner and secondary timing chain from the camshaft sprockets.

## Installation

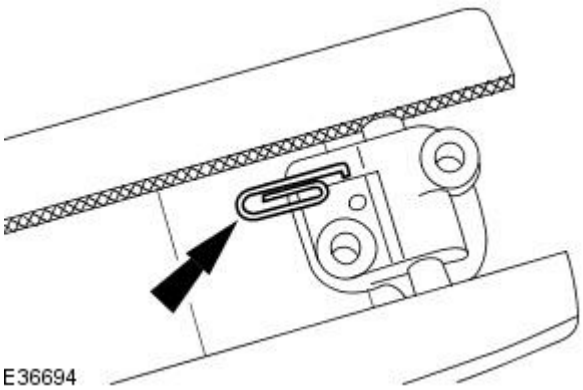


**1.** Using a suitable tool, retain the left-hand timing chain tensioner piston.

GETtheMANUALS.org

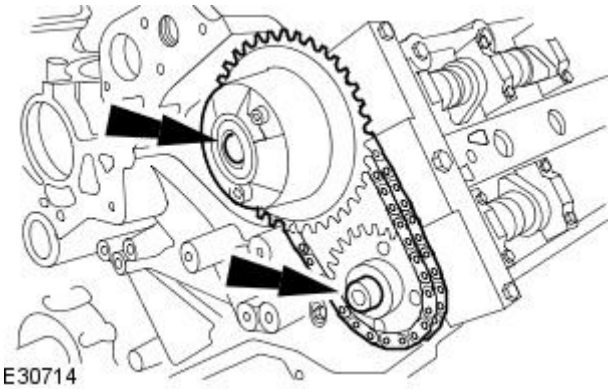


**2.** CAUTIONS:

Do not tighten the camshaft sprocket retaining bolts.

Make sure the secondary timing chain and camshaft sprockets are free to rotate.

Install the camshaft sprockets.

- Install the secondary timing chain tensioner and secondary timing chain to the camshaft sprockets.

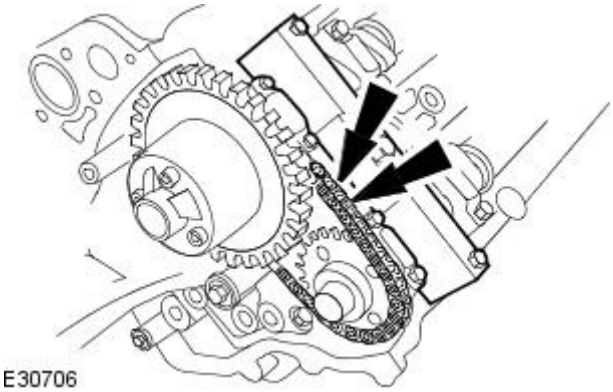


**3.** Install the secondary timing chain tensioner retaining bolts.

- Tighten to 12 Nm.

**4.** Release the tension in the left-hand timing chain tensioner.

- Remove the retaining tool.

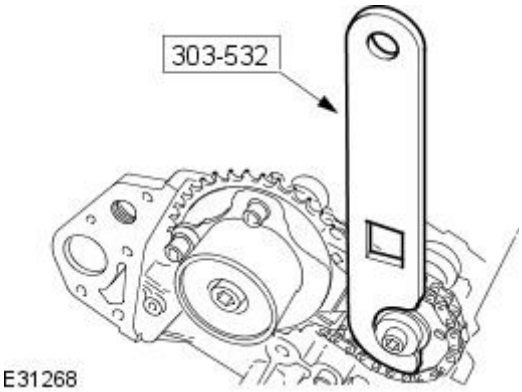


**5.** Install the timing chain tensioning tool 303-532 to the exhaust camshaft sprocket.

- Reposition the camshaft sprockets for the most advantageous position for use of the tool.

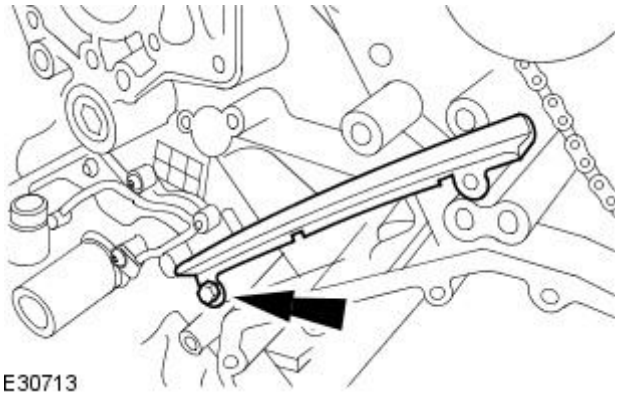


**6.** Install the primary timing chain tensioner guide.

- Tighten to 12 Nm.

GETtheMANUALS.org

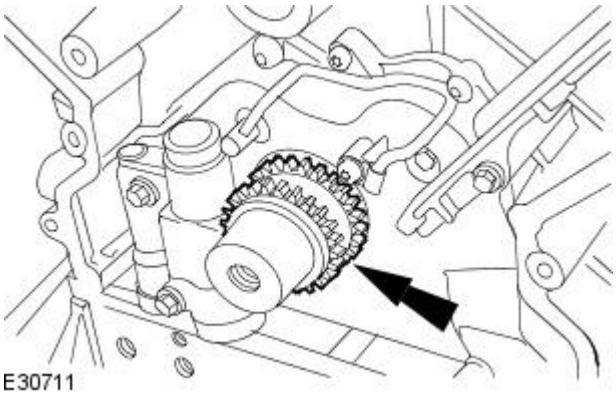


**7.** Install the crankshaft sprocket.

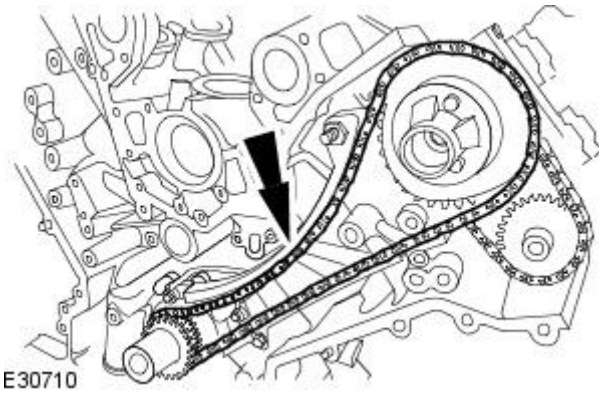


**8.** CAUTION: Make sure the timing chain slack is on the tensioned side of the timing chain.

Install the primary timing chain.

- Install the primary chain over the crankshaft sprocket and the intake sprocket.

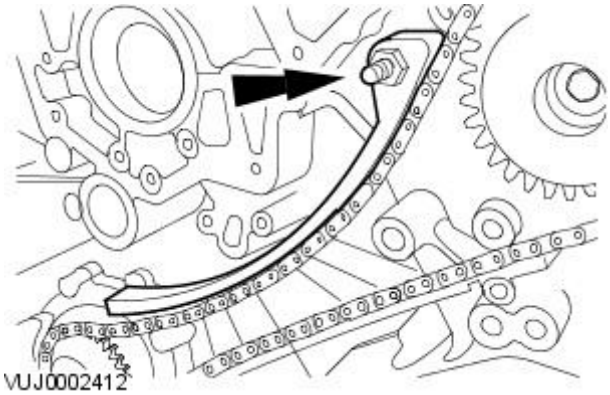


**9.** Install the primary timing chain tensioner guide.

- Tighten to 12 Nm.

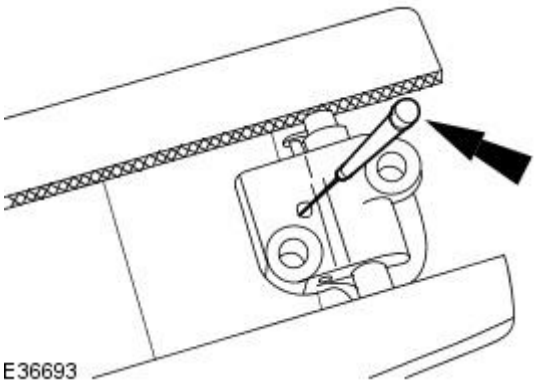


**10.** CAUTION: During timing chain tensioner compression, do not release the ratchet stem until the timing chain tensioner piston is fully bottomed in its bore or damage to the ratchet stem will result.

Using a suitable tool, hold the left-hand timing chain tensioner ratchet lock mechanism away from the ratchet stem.

**11.** NOTE: The timing chain tensioner piston should retract with minimal force. If binding occurs, reposition the timing chain tensioner to eliminate side loading.

Slowly compress the left-hand timing chain tensioner.

GETtheMANUALS.org

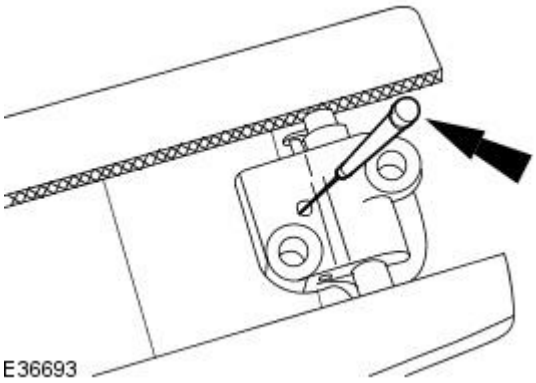


**12.** NOTE: The retaining tool must remain in the timing chain tensioner until the timing chain tensioner is installed to the engine with the piston bottomed in the bore.

Using a suitable tool, retain the left-hand timing chain tensioner piston.

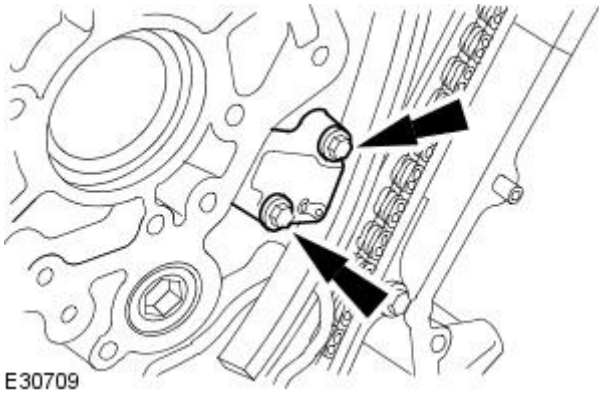


**13.** Install the primary timing chain tensioner assembly.

- Tighten to 12 Nm.

**14.** Release the tension in the left-hand timing chain tensioner.

- Remove the retaining tool.

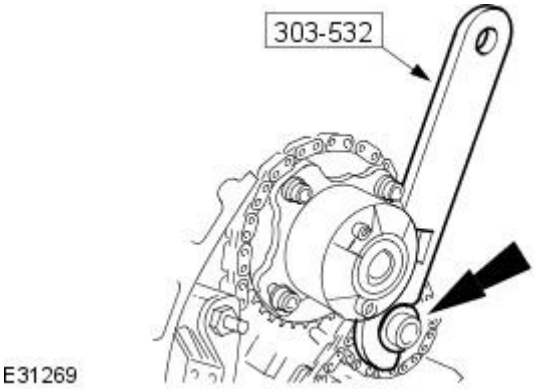


**15.** CAUTIONS:

While applying the opposing force to sprocket and chain, tighten the sprocket bolt.

Make sure that a new bolt is installed.

Using the special tool apply force to the tool in an anti-clockwise direction to tension the primary timing chain on its drive side.

- Tighten to 20 Nm + 90 deg.

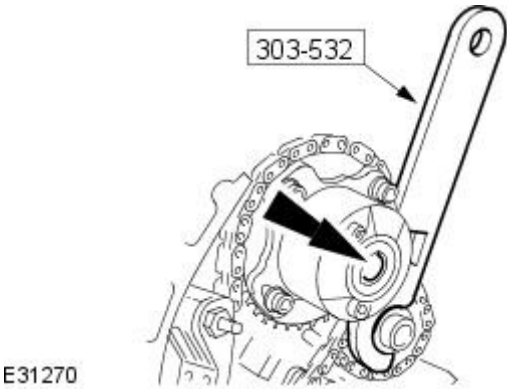


**16.** CAUTIONS:

While applying the opposing force to sprocket and chain, tighten the sprocket bolt.

Make sure that a new bolt is installed.

Using the special tool apply force to the tool in an anti-clockwise direction.

- Tighten to 20 Nm + 90 deg.

GETtheMANUALS.org

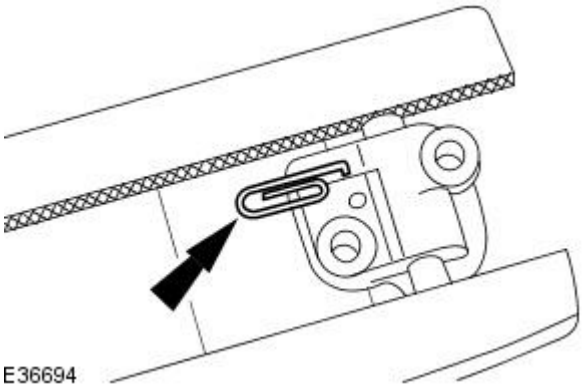


**17.** Using a suitable tool, retain the right-hand timing chain tensioner piston.

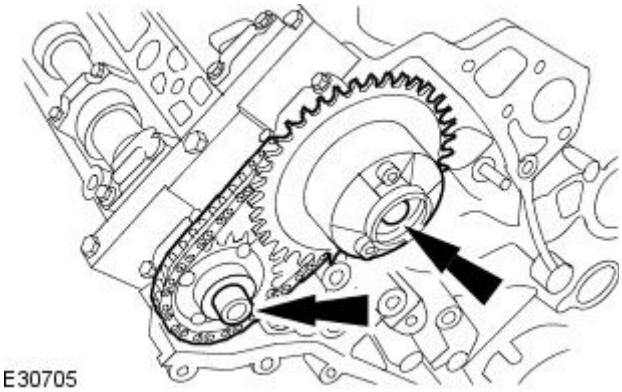


**18.** CAUTIONS:

Do not tighten the camshaft sprocket retaining bolts.

Make sure the secondary timing chain and camshaft sprockets are free to rotate.

Install the camshaft sprockets.

- Install the secondary timing chain tensioner and secondary timing chain to the camshaft sprockets.

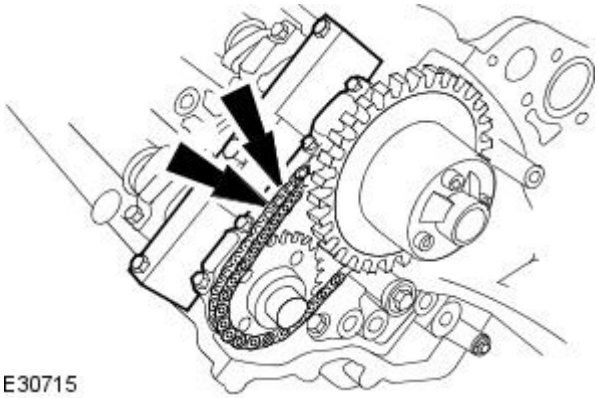


**19.** Install the secondary timing chain tensioner retaining bolts.

- Tighten to 12 Nm.

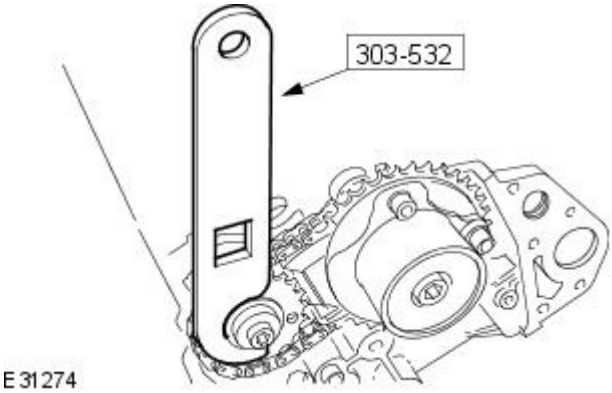


**20.** Install the timing chain tensioning tool 303-532 to the exhaust camshaft sprocket.

- Reposition the camshaft sprockets for the most advantageous position for use of the tool.

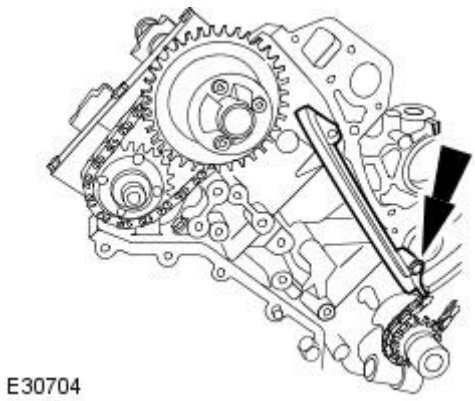


**21.** Install the primary timing chain guide.

- Tighten to 12 Nm.

GETtheMANUALS.org

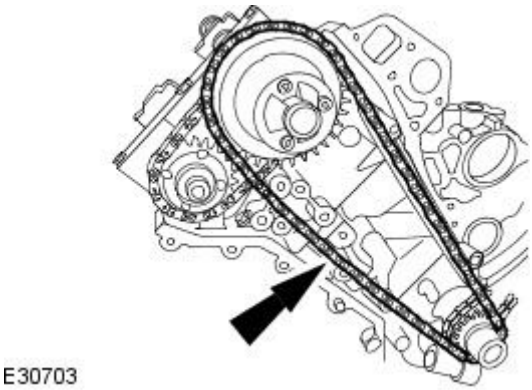

E30703

**22.** CAUTION: Make sure the timing chain slack is on the tensioned side of the timing chain.

Install the primary timing chain.

- Install the primary chain over the crankshaft sprocket and the intake sprocket.

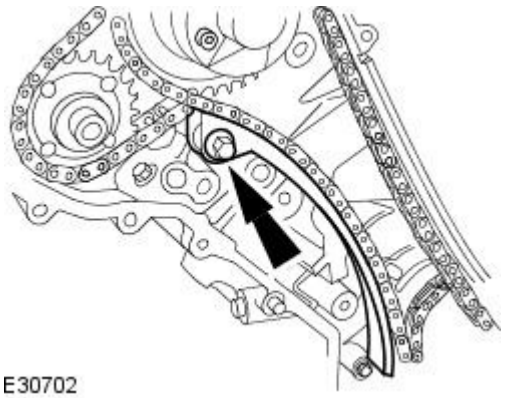

E30702

**23.** Install the primary timing chain tensioner guide.

- Tighten to 12 Nm.

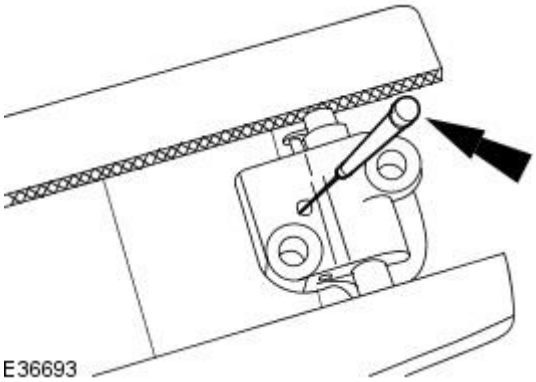

E36693

**24.** CAUTION: During timing chain tensioner compression, do not release the ratchet stem until the timing chain tensioner piston is fully bottomed in its bore or damage to the ratchet stem will result.

Using a suitable tool, hold the right-hand timing chain tensioner ratchet lock mechanism away from the ratchet stem.

**25.** NOTE: The timing chain tensioner piston should retract with minimal force. If binding occurs, reposition the timing chain tensioner to eliminate side loading.

Slowly compress the right-hand timing chain tensioner.

**26.** NOTE: The retaining tool must remain in the timing chain tensioner until the timing chain tensioner is installed to the engine with the piston bottomed in the bore.

Using a suitable tool, retain the right-hand timing chain tensioner piston.

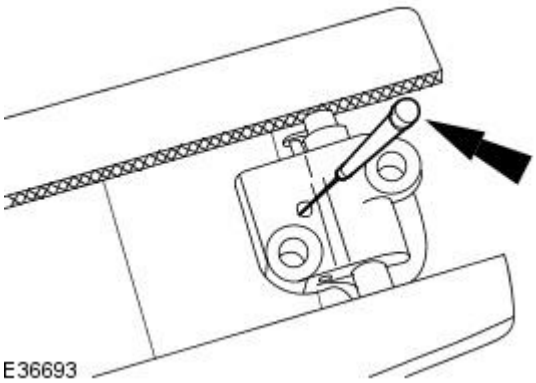

E36693

GETtheMANUALS.org

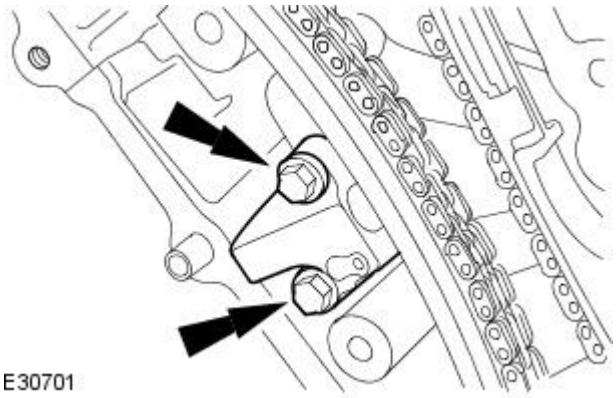


**27.** Install the primary timing chain tensioner assembly.

- Tighten to 12 Nm.

**28.** Release the tension in the right-hand timing chain tensioner.

- Remove the retaining tool.

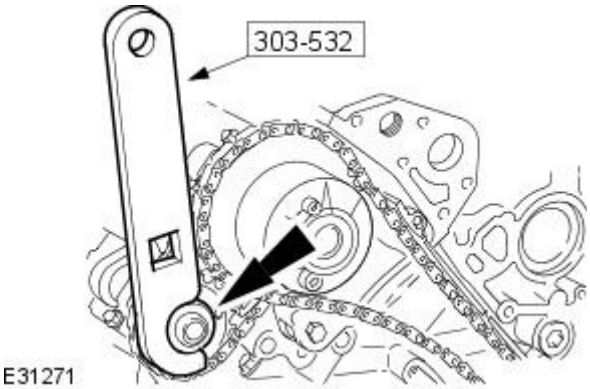


**29.** CAUTIONS:

While applying the opposing force to sprocket and chain, tighten the sprocket bolt.

Make sure that a new bolt is installed.

Using the special tool apply force to the tool in an anti-clockwise direction to tension the primary timing chain on its drive side.

- Tighten to 20 Nm + 90 deg.

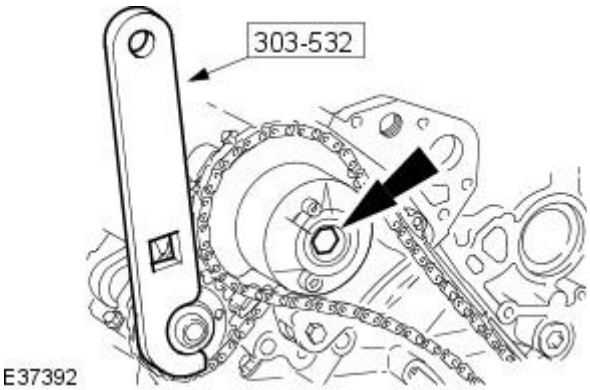


**30.** CAUTIONS:

While applying the opposing force to sprocket and chain, tighten the sprocket bolt.

Make sure that a new bolt is installed.

Using the special tool apply force to the tool in an anti-clockwise direction.

- Tighten to 20 Nm + 90 deg.

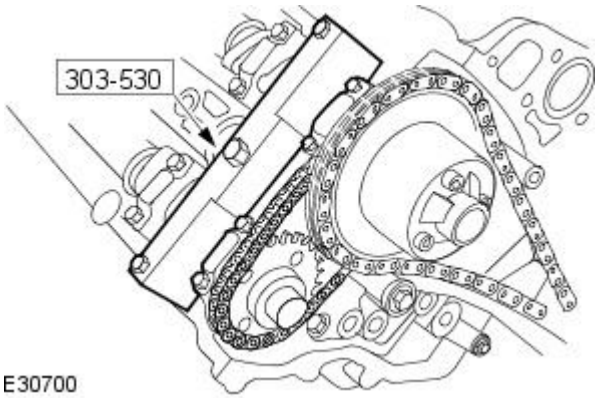


**31.** Remove the special tool from the right-hand cylinder head.

GETtheMANUALS.org

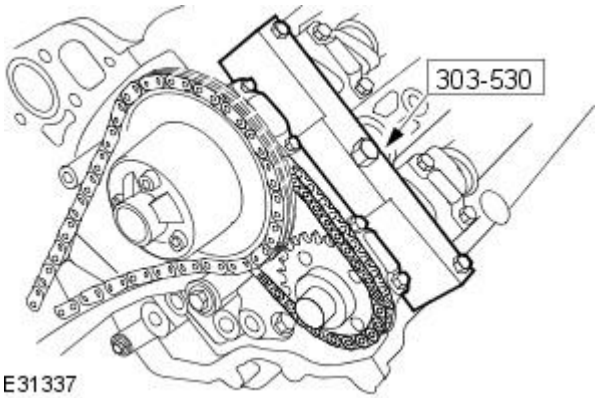

E31337

**32.** Remove the special tool from the left-hand cylinder head.

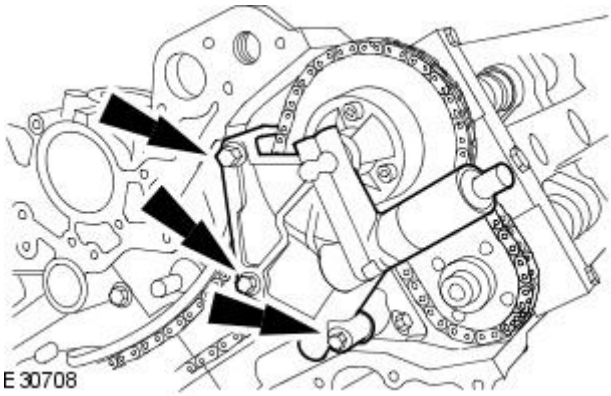
E30708

**33.** Install the left-hand variable camshaft timing oil control unit housing.

- Install new O-ring seals.
- Tighten to 22 Nm.

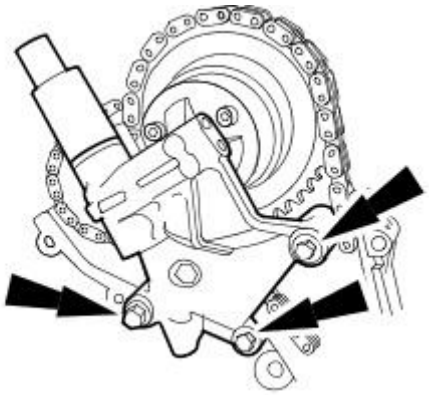
E30699

**34.** Install the right-hand variable camshaft timing oil control unit housing.

- Install new O-ring seals.
- Tighten to 22 Nm.

**35.** Raise the vehicle.

**36.** Remove the special tool.

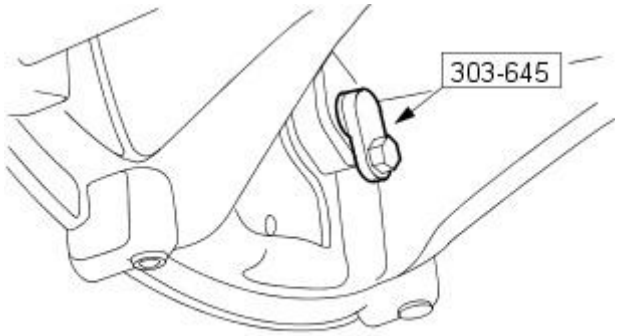

VUJ0002400

**37.** Install the CKP sensor.

- Tighten to 10 Nm.

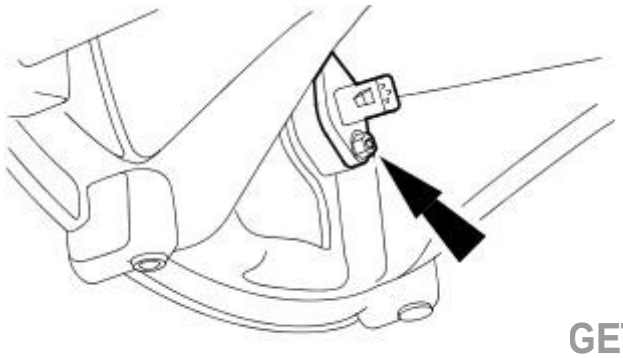
E30694

GETtheMANUALS.org

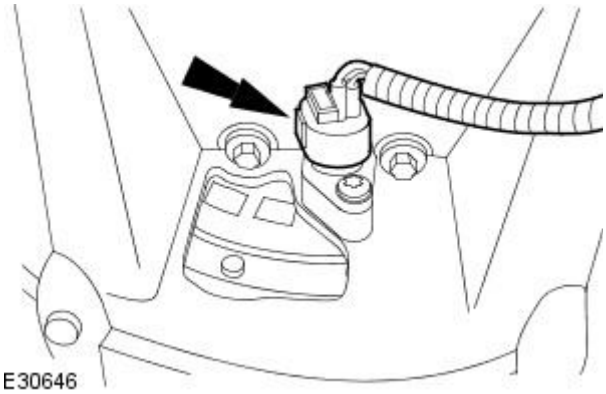


**38.** Connect the CKP sensor electrical connector.

**39.** Lower the vehicle.

**40.** Install the spark plugs.

**41.** Install the engine front cover.
For additional information, refer to: Engine Front Cover - VIN Range: N52048->N99999 (303-01B Engine - V8 4.2L Petrol/V8 S/C 4.2L Petrol, In-vehicle Repair).

GETtheMANUALS.org

# Engine - V8 4.2L Petrol/V8 S/C 4.2L Petrol - Valve Cover LHVIN Range: M45255->N52047

In-vehicle Repair

## Removal

All vehicles

1. Remove the air cleaner. For additional information, refer to Section 303-12A Intake Air Distribution and Filtering / 303-12B Intake Air Distribution and Filtering / 303-12C Intake Air Distribution and Filtering.
2. Remove the ignition coil-on-plug cover.

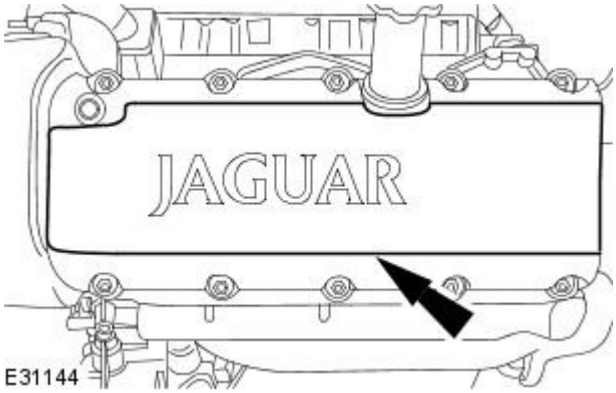


3. Remove the oil level indicator and tube.
   - Remove and discard the O-ring seal.

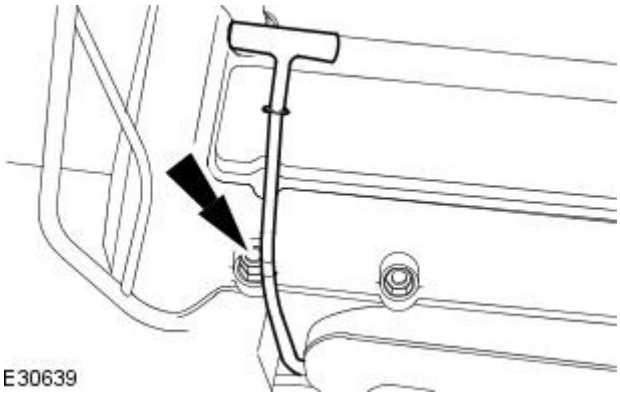


Vehicles without supercharger

4. Remove the left-hand engine cover bracket.

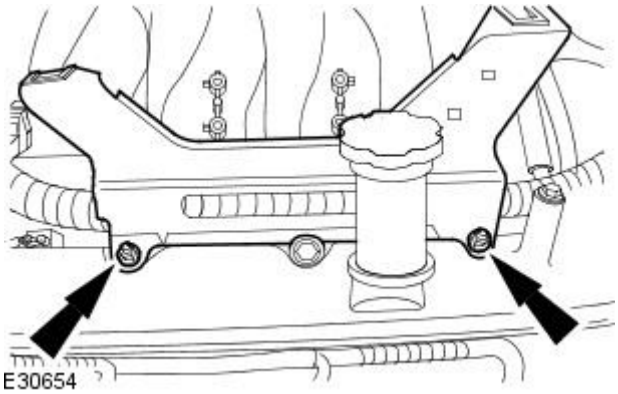


5. Detach the engine wiring harness.
   1. Disconnect the variable camshaft timing (VCT) oil control solenoid electrical connector.
   2. Detach the engine wiring harness.

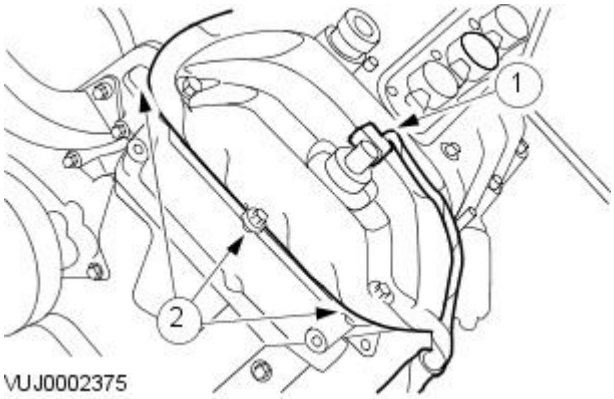


GETtheMANUALS.org

All vehicles

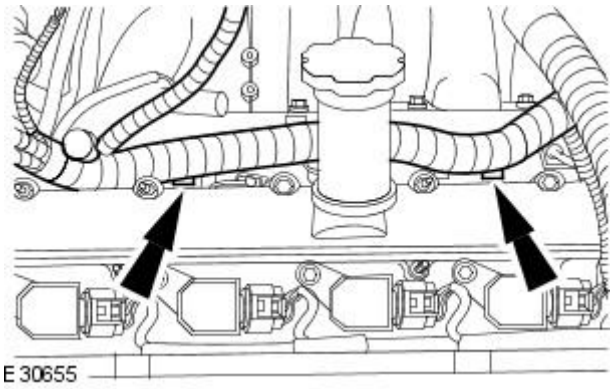


**6.** Detach the left-hand engine wiring harness.

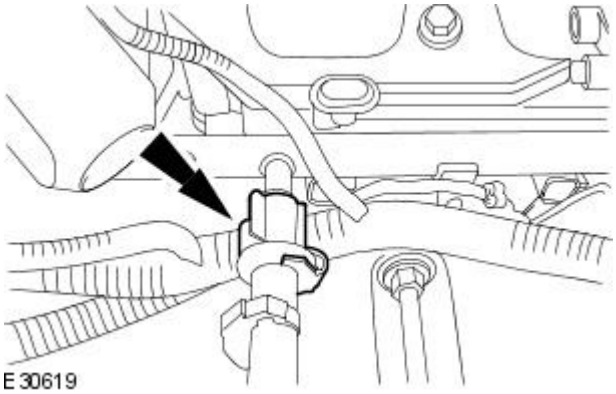


**7.** Detach the fuel line retaining clip.

**8.** Detach the fuel line.
For additional information, refer to Section 310-00 Fuel System - General Information.

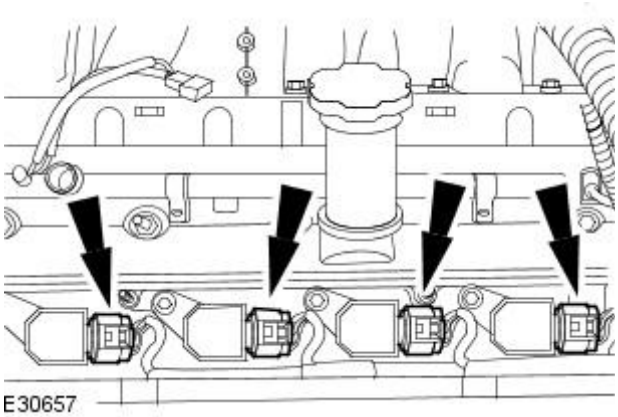


**9.** Disconnect the ignition coil-on-plug electrical connectors.

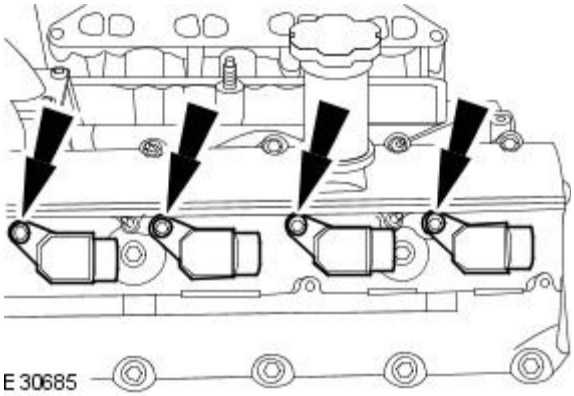


**10.** Remove the ignition coil on-plugs.

**11.** Remove the valve cover assembly.

- Remove and discard valve cover gaskets.

GETtheMANUALS.org

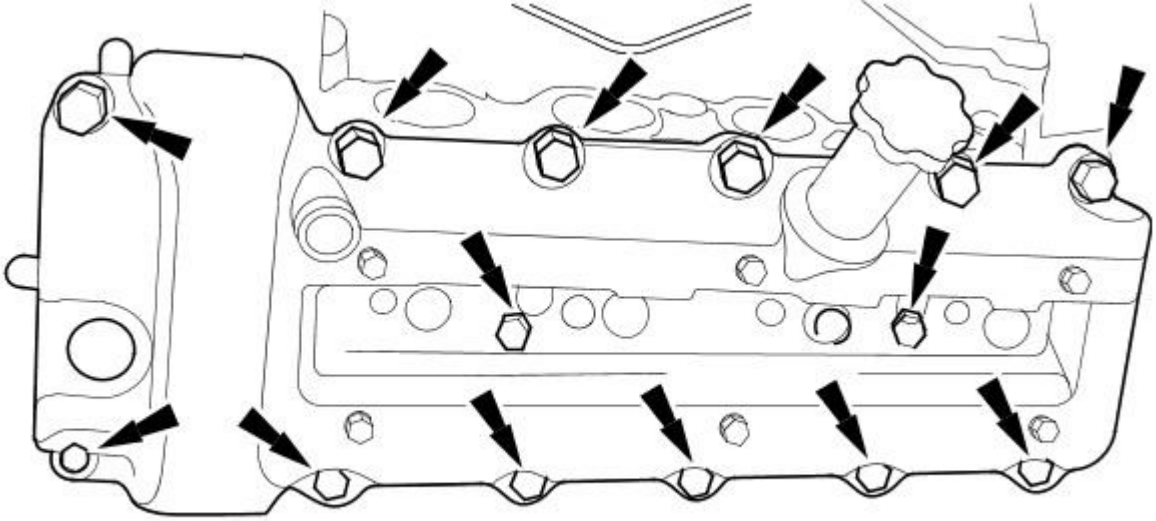

E30697

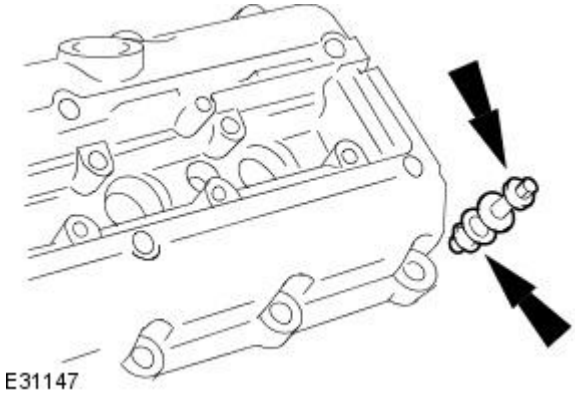

E31147

**12.** NOTE: On removal of the valve cover retaining bolts note their positions in the valve cover.

Remove the valve cover retaining bolts.

- Remove and discard the valve cover retaining bolt O-ring seals.

## Installation

All vehicles

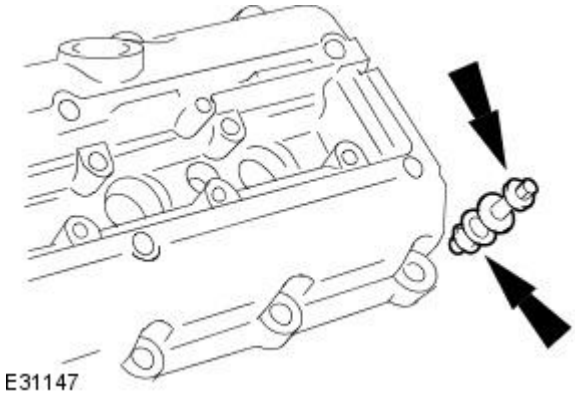

E31147

**1.** NOTE: Install the valve cover retaining bolts to their positions previously noted.

Install the valve cover retaining bolts.

- Install new valve cover retaining bolt O-ring seals.

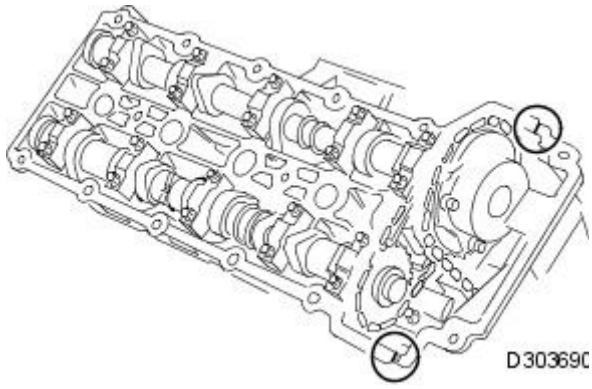

D303690

**2.** Apply bead of silicone gasket sealant or equivalent meeting Jaguar specification on the two places where the cylinder head and front cover join.

- The application of sealant must be 3mm diameter by 12mm long. Install the valve cover immediately after applying the sealant.
- The cover should be fitted directly to the head without smearing the sealant or the seals.

GETtheMANUALS.org

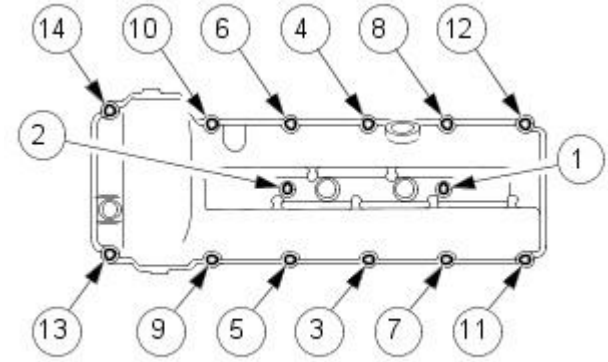

VUJ0001977

**3.** Install the valve cover.

- Install new valve cover gaskets.
- Complete the tightening sequence.
- Tighten to 12 Nm.

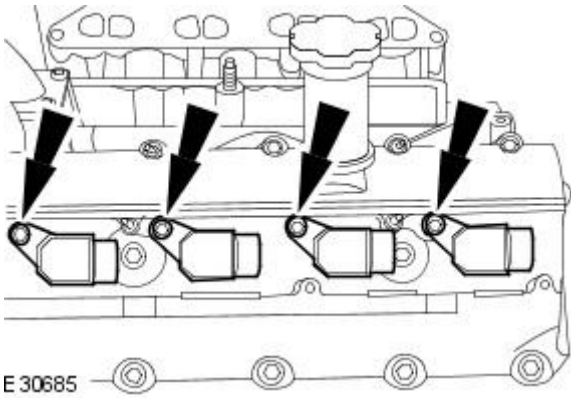
E30685

**4.** Install the ignition coil-on-plugs.

- Tighten to 5 Nm.

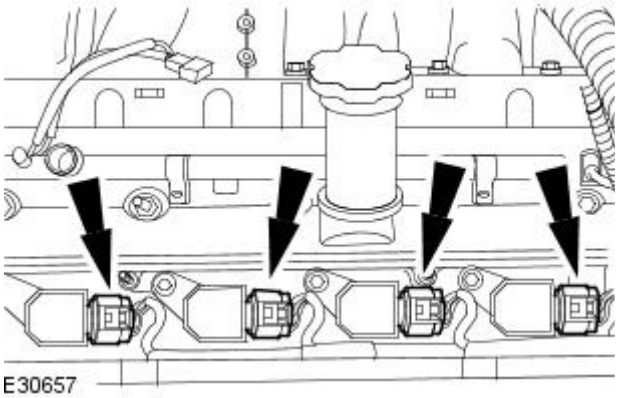
E30657

**5.** Connect the ignition coil-on-plug electrical connectors.

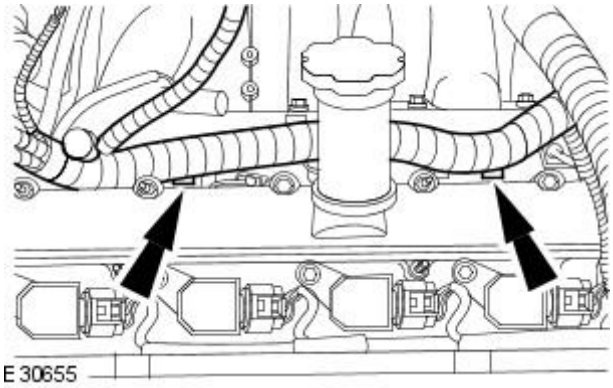
E30655

**6.** Attach the left-hand engine wiring harness.

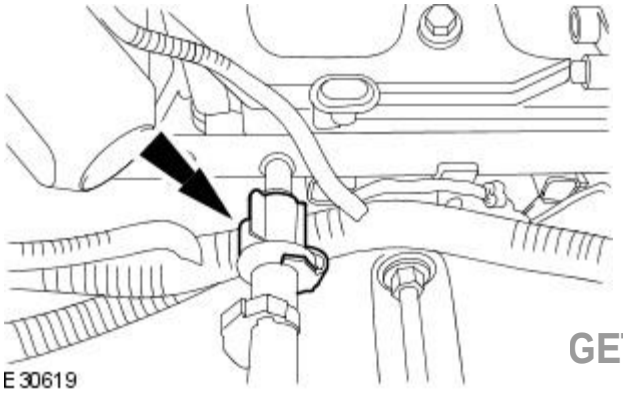
E30619

**7.** Connect the fuel line.

- Attach the fuel line retaining clip.
- Install new O-ring seals.

GETtheMANUALS.org

Vehicles without supercharger

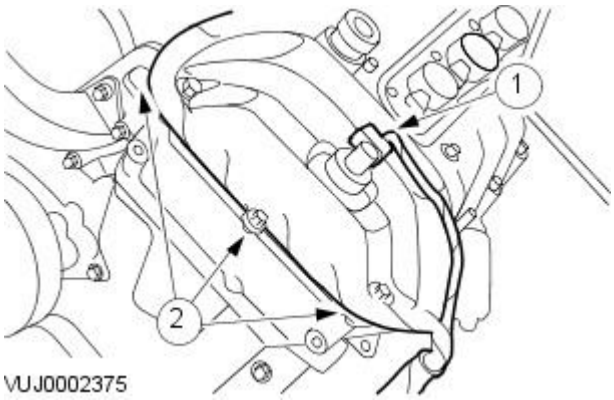


**8.** Attach the engine wiring harness.

1. Connect the variable camshaft timing (VCT) oil control solenoid electrical connector.
2. Attach the engine wiring harness.

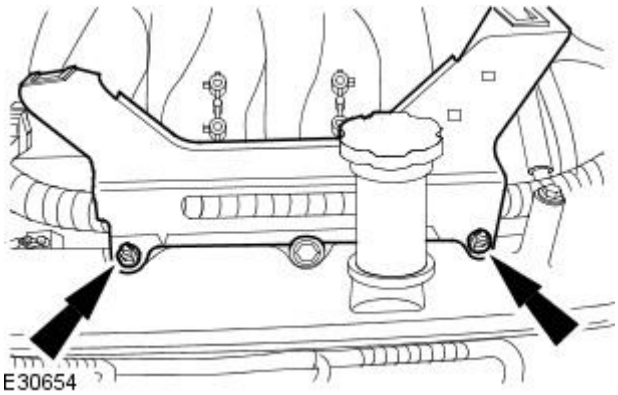


**9.** Install the left-hand engine cover bracket.

- Tighten to 6 Nm.

All vehicles

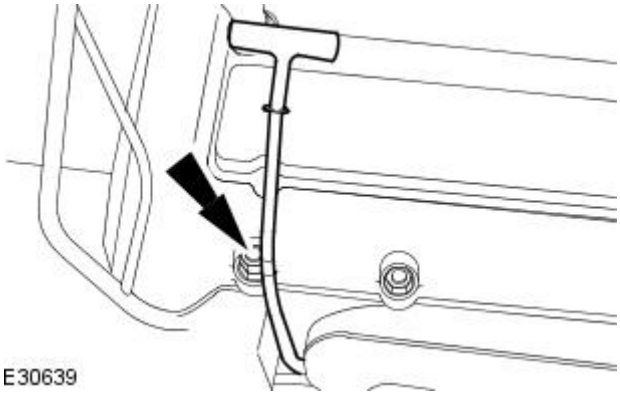


**10.** Install the oil level indicator and tube.

- Install a new O-ring seal.
- Tighten to 6 Nm.

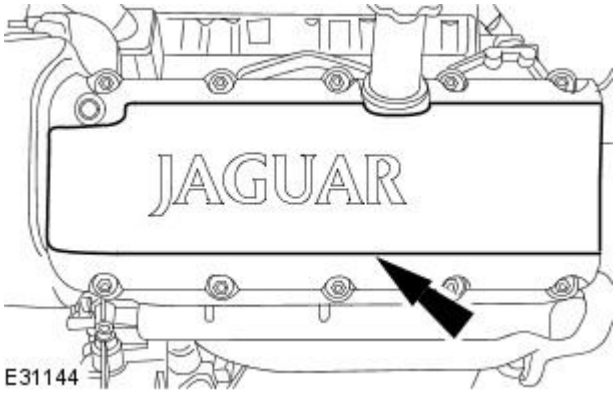


**11.** Install the ignition coil-on-plug cover.

**12.** Install the air cleaner. For additional information, refer to Section 303-12A Intake Air Distribution and Filtering / 303-12B Intake Air Distribution and Filtering / 303-12C Intake Air Distribution and Filtering.

GETtheMANUALS.org

# Engine - V8 4.2L Petrol/V8 S/C 4.2L Petrol - Valve Cover LHVIN Range: N52048->N99999

In-vehicle Repair

## Removal

**1.** Remove the air cleaner.
For additional information, refer to: Air Cleaner (303-12B Intake Air Distribution and Filtering - V8 4.2L Petrol/V8 S/C 4.2L Petrol, Removal and Installation).

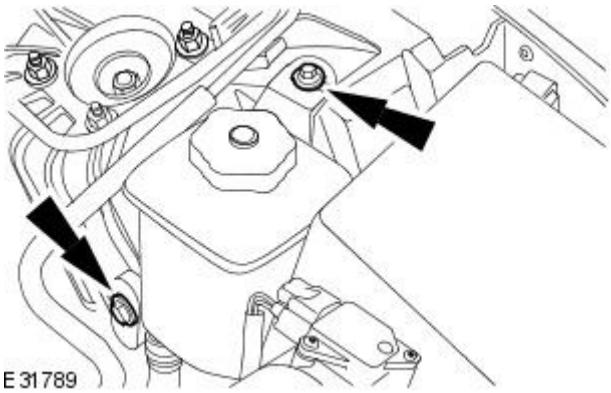


**2.** CAUTION: If power steering fluid comes into contact with the paintwork, the affected area must be immediately washed down with cold water.

Detach the power steering fluid reservoir.

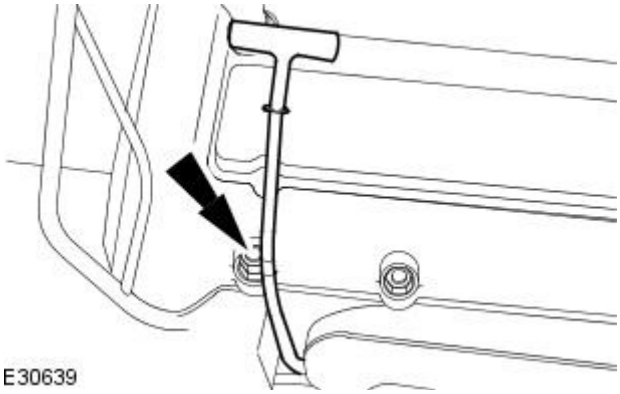


**3.** Remove the oil level indicator and tube.

- Remove and discard the O-ring seal.

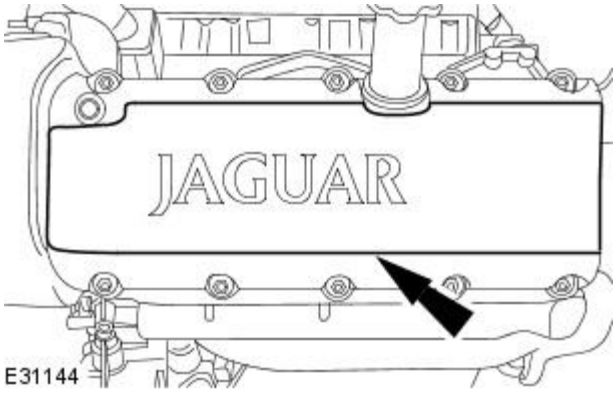


**4.** Remove the ignition coil-on-plug cover.

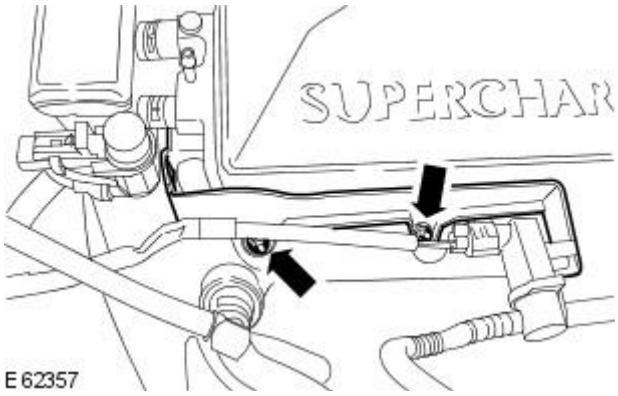


**5.** NOTE: Vehicles with supercharger shown, vehicles without supercharger similar.

Detach the engine cover bracket.

GETtheMANUALS.org

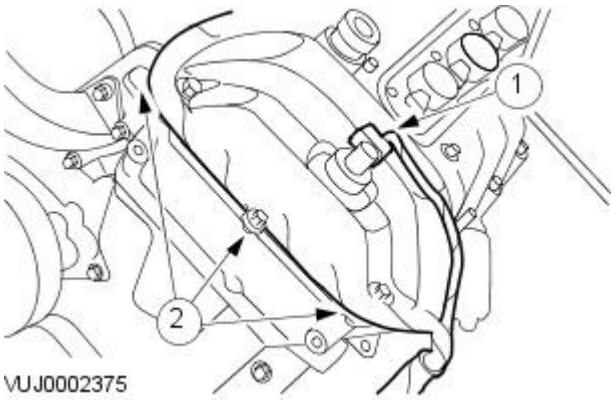


**6.** Detach the engine wiring harness.

1. Disconnect the variable camshaft timing (VCT) oil control solenoid electrical connector.
2. Detach the engine wiring harness.

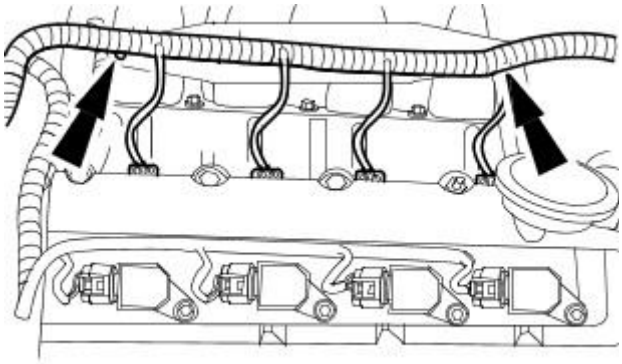


**7.** NOTE: Right-hand shown, left-hand similar.

Detach the engine wiring harness.

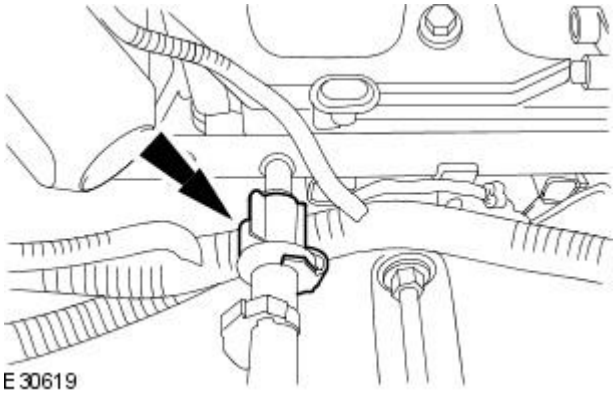


**8.** Disconnect the fuel line.
For additional information, refer to: Spring Lock Couplings (310-00 Fuel System - General Information, General Procedures).

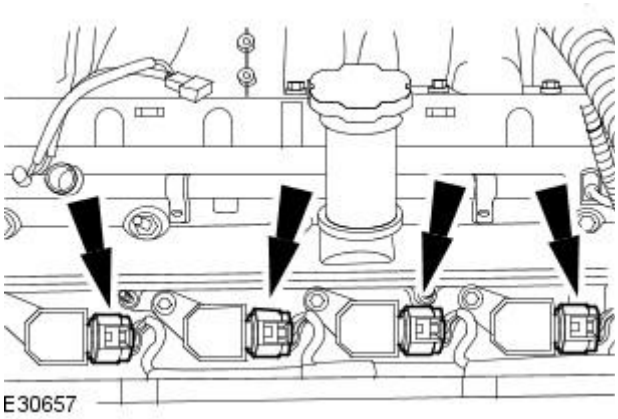


**9.** Disconnect the ignition coil-on-plug electrical connectors.

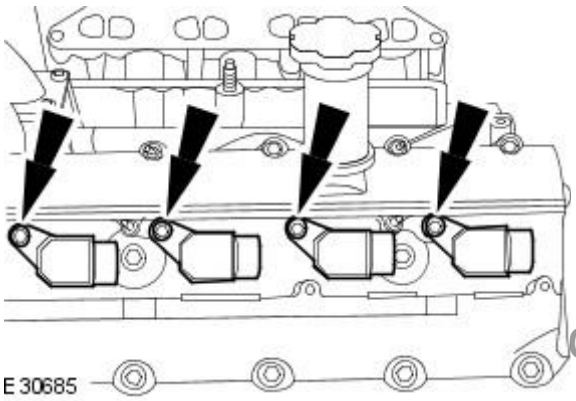


**10.** Remove the ignition coil on-plugs.

GETtheMANUALS.org

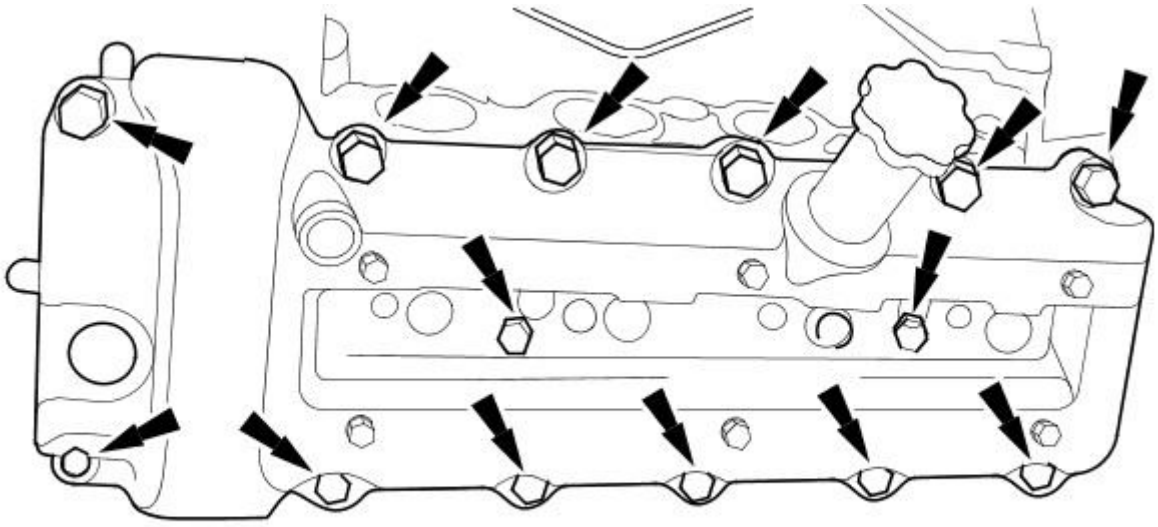

E30697

**11.** Remove the valve cover assembly.

- Remove and discard valve cover gaskets.

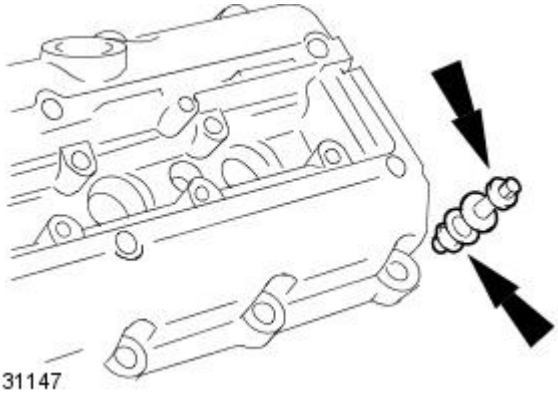

E31147

**12.** NOTE: On removal of the valve cover retaining bolts note their positions in the valve cover.

Remove the valve cover retaining bolts.

- Remove and discard the valve cover retaining bolt O-ring seals.

## Installation

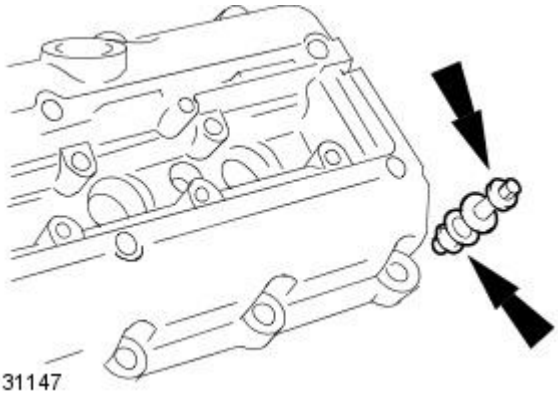

E31147

**1.** NOTE: Install the valve cover retaining bolts to their positions previously noted.

Install the valve cover retaining bolts.

- Install new valve cover retaining bolt O-ring seals.

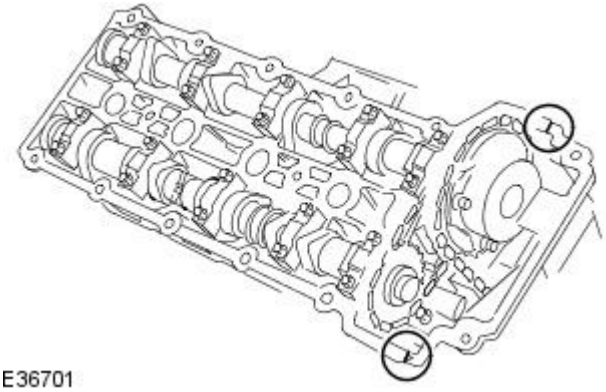

E36701

**2.** Apply bead of silicone gasket sealant or equivalent meeting Jaguar specification on the two places where the cylinder head and front cover join.

- The application of sealant must be 3mm diameter by 12mm long. Install the valve cover immediately after applying the sealant.
- The cover should be fitted directly to the head without smearing the sealant or the seals.

GETtheMANUALS.org

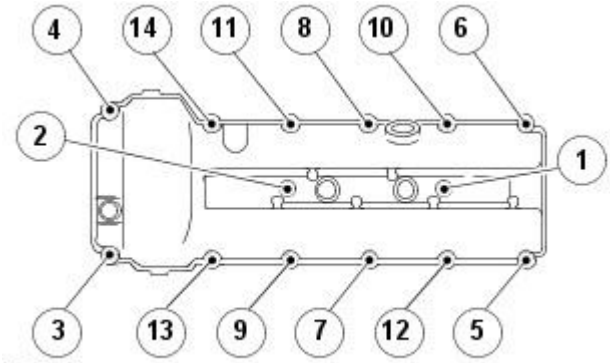

E63485

**3.** Install the valve cover.

- Install new valve cover gaskets.
- Complete the tightening sequence.
- Tighten to 10 Nm.

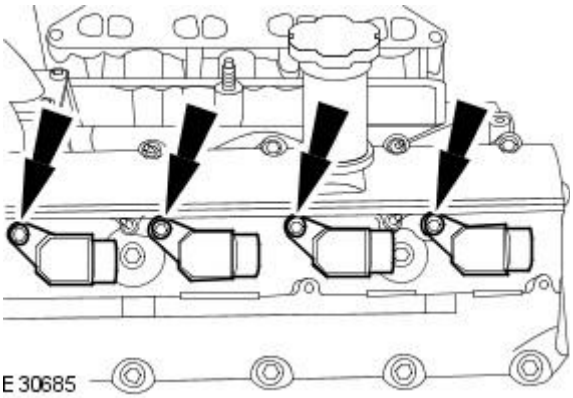
E30685

**4.** Install the ignition coil-on-plugs.

- Tighten to 5 Nm.

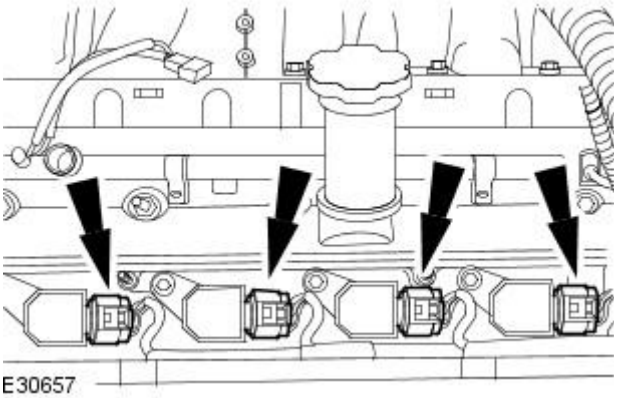
E30657

**5.** Connect the ignition coil-on-plug electrical connectors.

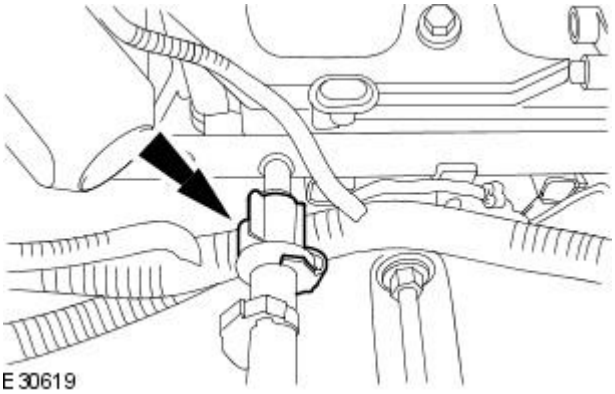
E30619

**6.** Connect the fuel line.

- Attach the fuel line retaining clip.
- Install new O-ring seals.

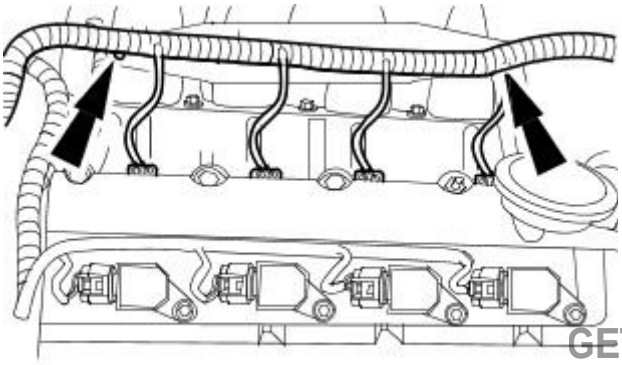
E30668

**7.** NOTE: Right-hand shown, left-hand similar.

Attach the engine wiring harness.

GETtheMANUALS.org

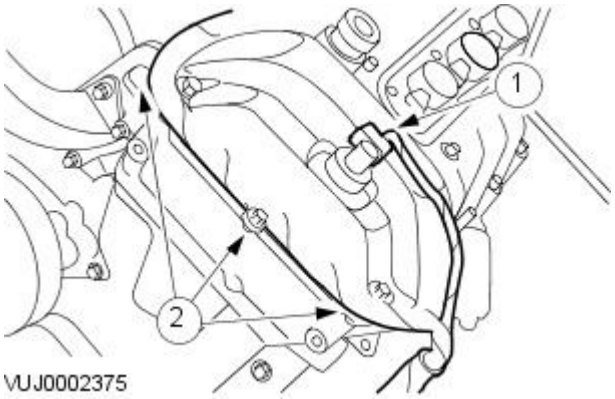


**8.** Attach the engine wiring harness.

1. Connect the VCT oil control solenoid electrical connector.
2. Attach the engine wiring harness.

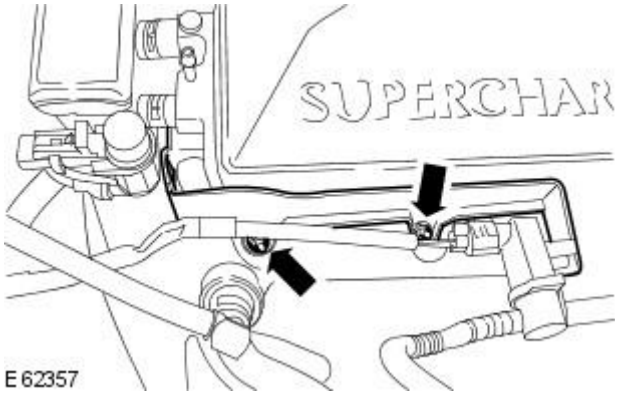


**9.** NOTE: Vehicles with supercharger shown, vehicles without supercharger similar.

Attach the engine cover bracket.

- Tighten to 6 Nm.

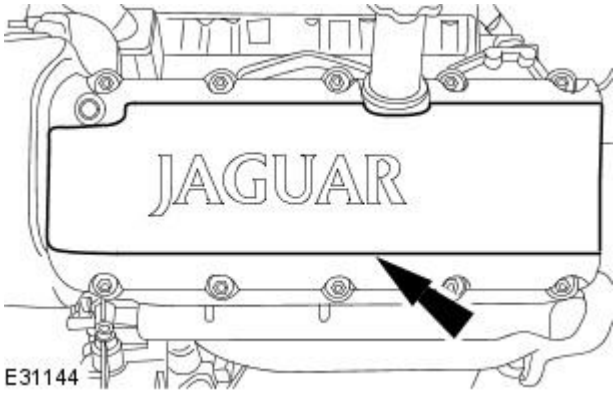


**10.** Install the ignition coil-on-plug cover.

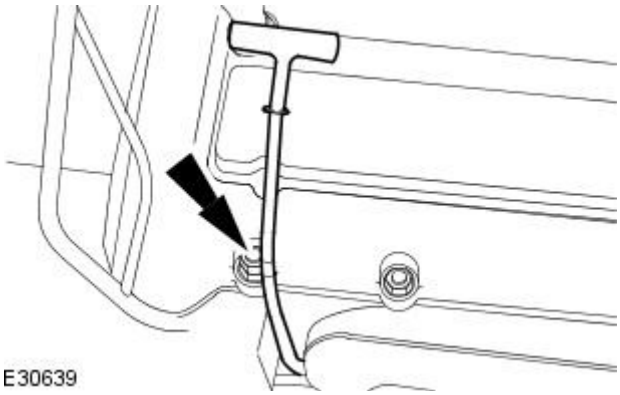


**11.** Install the oil level indicator and tube.

- Install a new O-ring seal.
- Tighten to 6 Nm.

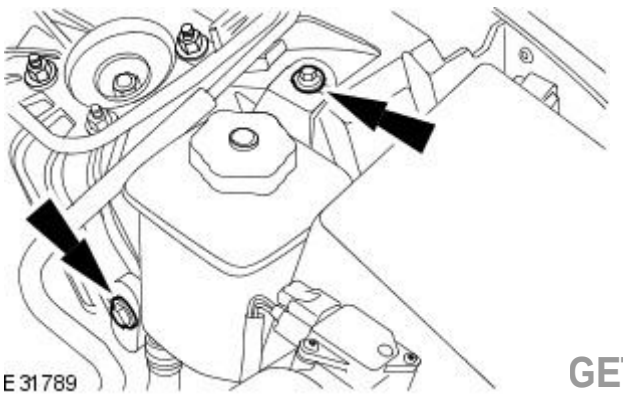


**12.** CAUTION: If power steering fluid comes into contact with the paintwork, the affected area must be immediately washed down with cold water.

Attach the power steering fluid reservoir.

**13.** Install the air cleaner.
For additional information, refer to: Air Cleaner (303-12B Intake Air Distribution and Filtering - V8 4.2L Petrol/V8 S/C 4.2L Petrol, Removal and Installation).

GETtheMANUALS.org

# Engine - V8 4.2L Petrol/V8 S/C 4.2L Petrol - Valve Cover RHVIN Range: M45255->N52047

In-vehicle Repair

## Removal

All vehicles

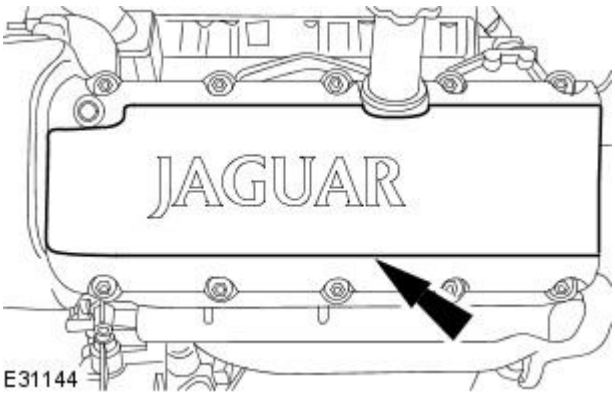


**1.** NOTE: Left-hand shown right-hand similar.

Remove the ignition coil-on-plug cover.

Vehicles without supercharger

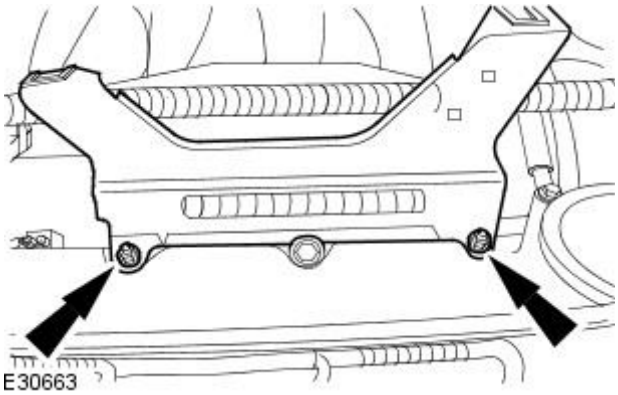


**2.** Remove the right-hand engine cover bracket.

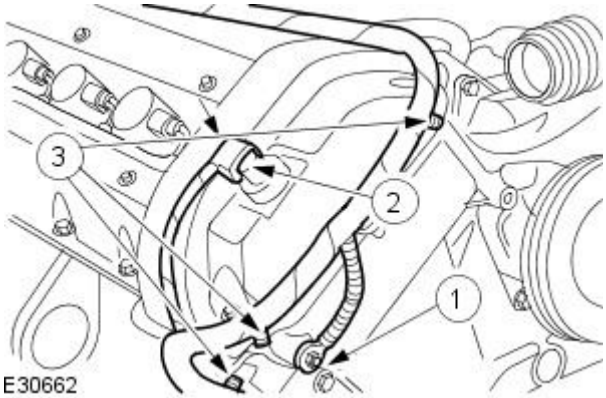


**3.** Detach the engine wiring harness.

1. Detach the ground harness
2. Disconnect the variable camshaft timing (VCT) oil control solenoid electrical connector.
3. Detach the engine wiring harness.

All vehicles

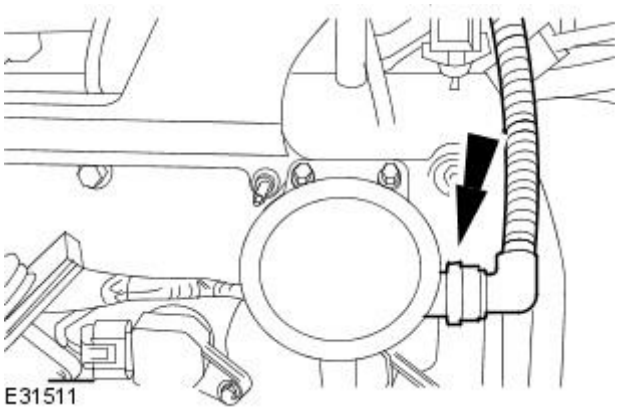


**4.** Disconnect the positive crank ventilation (PCV) pipe.

GETtheMANUALS.org

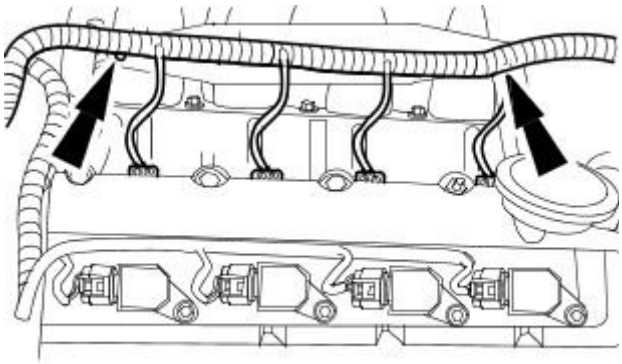

E30668

**5.** Detach the right-hand engine wiring harness.

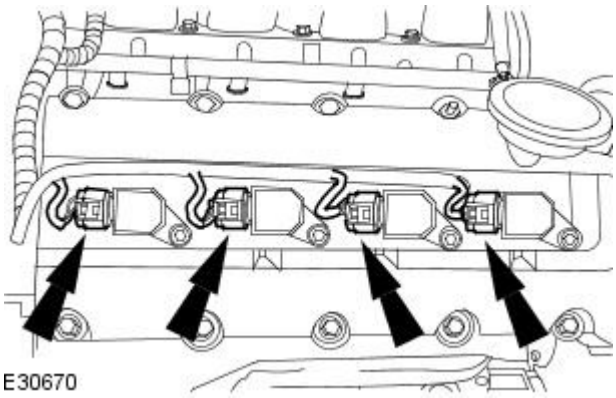

E30670

**6.** Remove the ignition coil-on-plugs.

- Remove the retaining bolts.

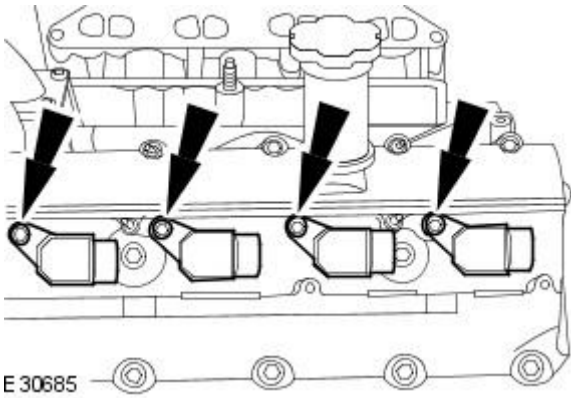

E30685

**7.** Remove the ignition coil-on-plugs.

- Remove the retaining bolts.

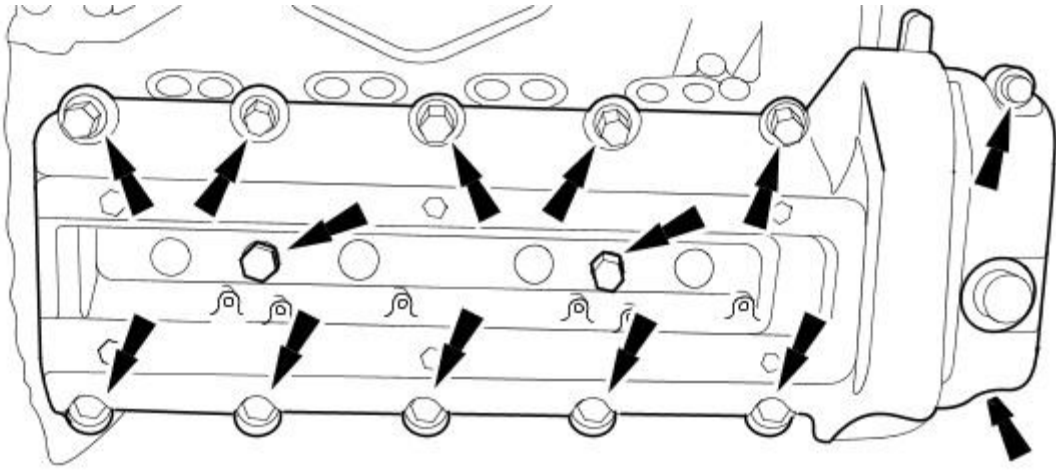

E30696

**8.** Remove the valve cover assembly.

- Remove and discard valve cover gaskets.

GETtheMANUALS.org

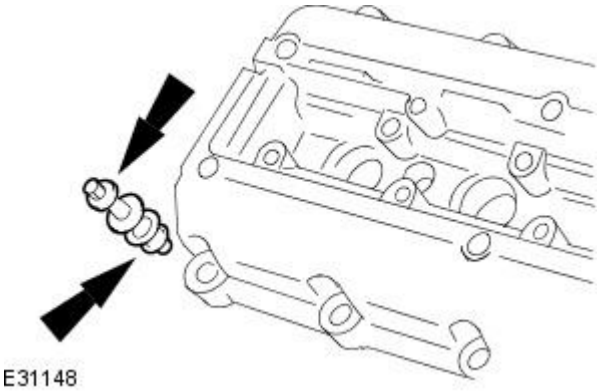


**9.** NOTE: On removal of the valve cover retaining bolts note their positions in the valve cover.

Remove the valve cover retaining bolts.

- Remove and discard the valve cover retaining bolt O-ring seals.

## Installation

All vehicles

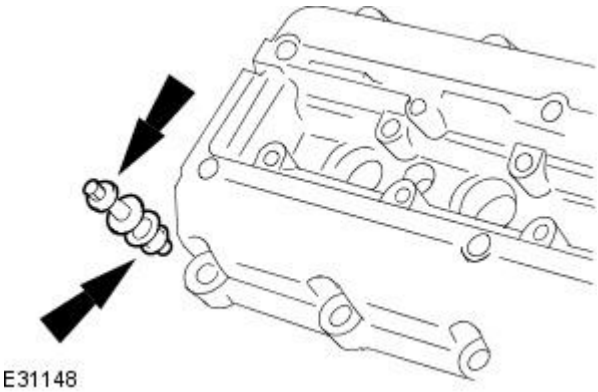


**1.** NOTE: Install the valve cover retaining bolts to their positions previously noted.

Install the valve cover retaining bolts.

- Install new valve cover retaining bolt O-ring seals.

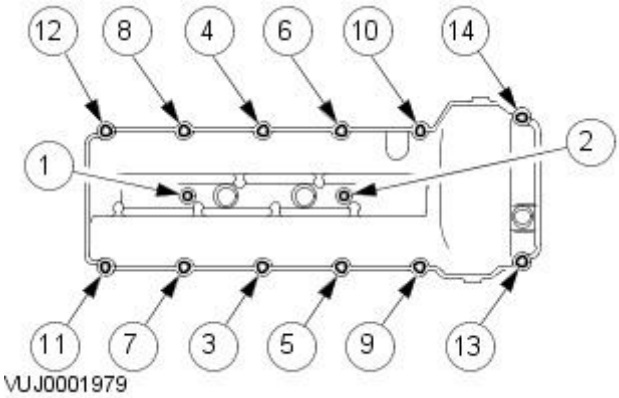


**2.** Install the valve cover.

- Install new valve cover gaskets.
- Complete the tightening sequence.
- Tighten to 12 Nm.

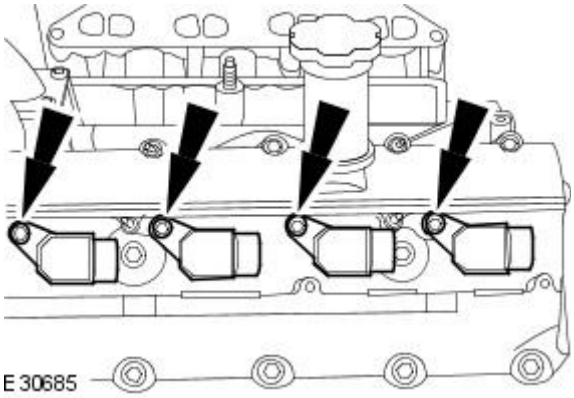


**3.** Install the ignition coil-on-plugs.

- Tighten to 5 Nm.

GETtheMANUALS.org

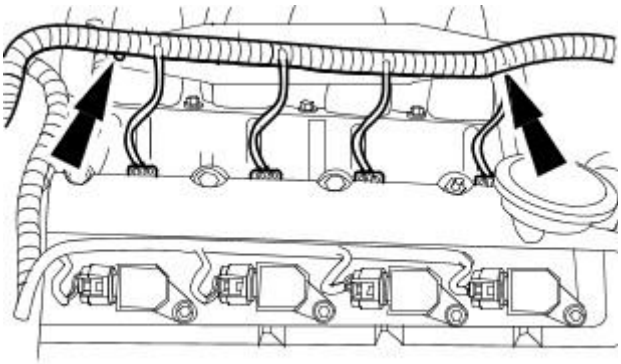


**4.** Attach the right-hand engine wiring harness.

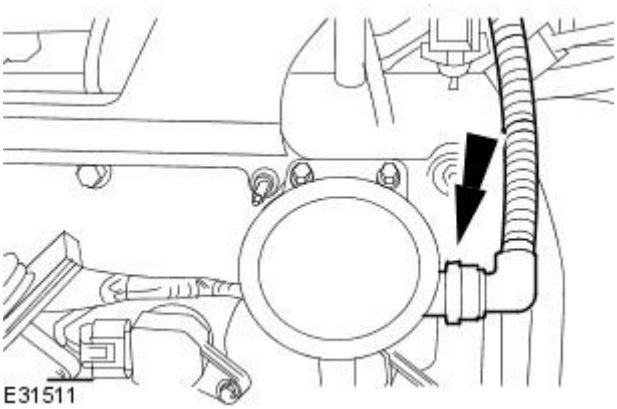


**5.** Connect the positive crank ventilation (PCV) pipe.

Vehicles without supercharger

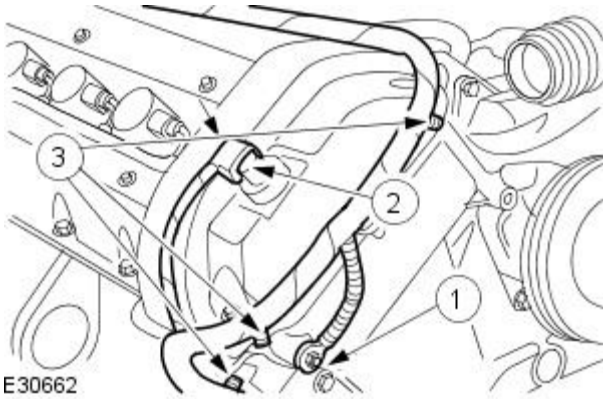


**6.** Attach the engine wiring harness.

1. Attach the ground harness
2. Connect the VCT oil control solenoid electrical connector.
3. Attach the engine wiring harness.

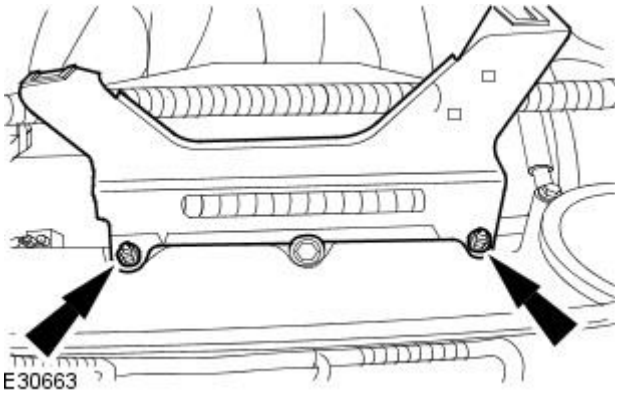


**7.** Install the right-hand engine cover bracket.

All vehicles

GETtheMANUALS.org

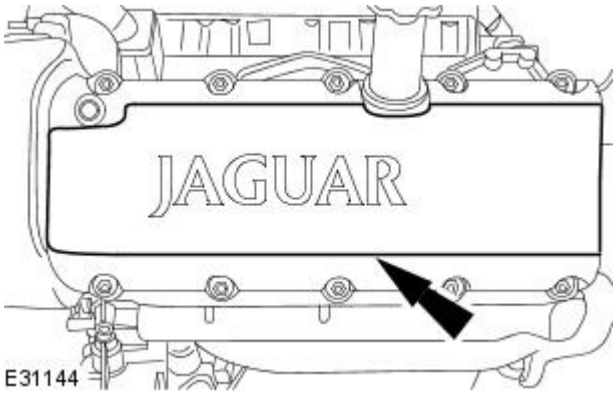


**8.** NOTE: Left-hand shown right-hand similar.

Install the ignition coil-on-plug cover.

GETtheMANUALS.org

# Engine - V8 4.2L Petrol/V8 S/C 4.2L Petrol - Valve Cover RHVIN Range: N52048->N99999

In-vehicle Repair

## Removal

All vehicles

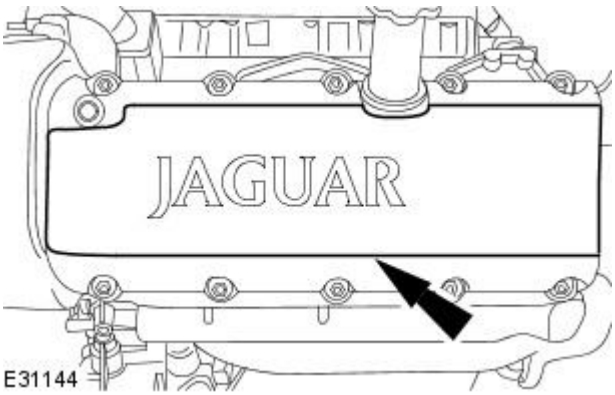


**1.** NOTE: Left-hand shown, right-hand similar.

Remove the ignition coil-on-plug cover.

Vehicles without supercharger

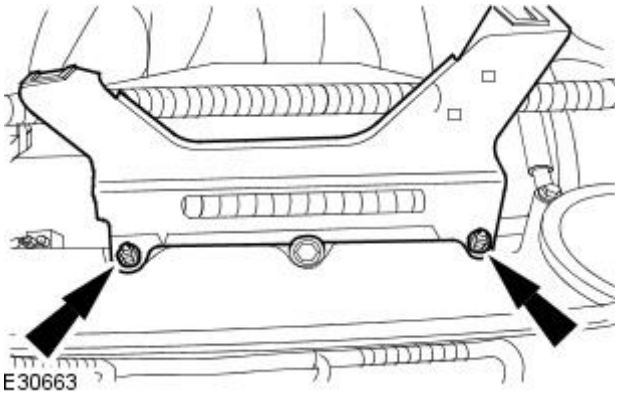


**2.** Remove the engine cover right-hand bracket.

All vehicles

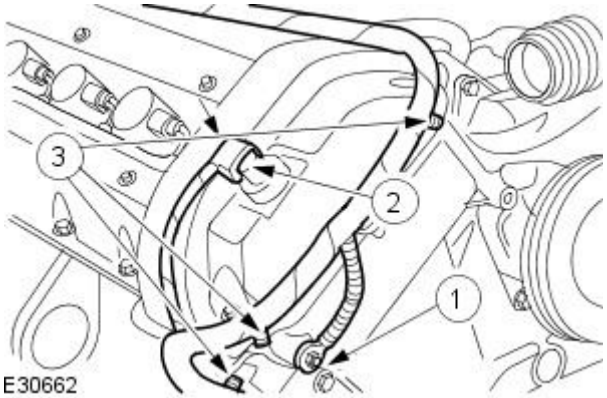


**3.** Detach the engine wiring harness.

1. Detach the ground harness.
2. Disconnect the variable camshaft timing (VCT) oil control solenoid electrical connector.
3. Detach the engine wiring harness.

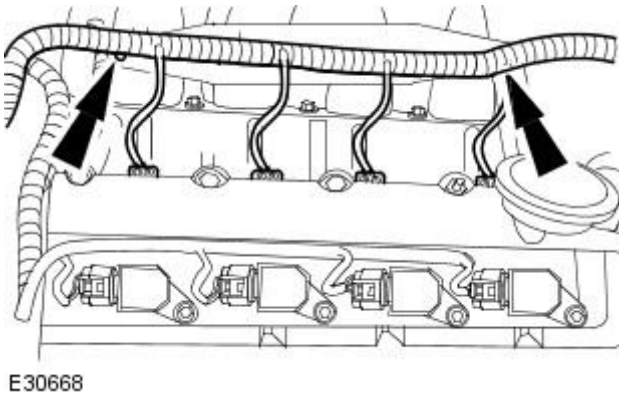


**4.** Detach the engine wiring harness.

GETtheMANUALS.org

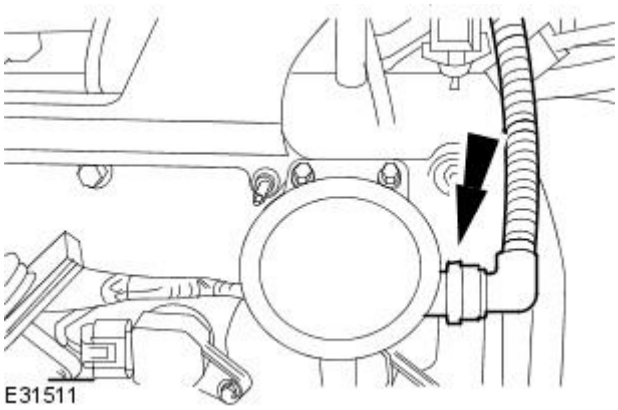


**5.** Disconnect the positive crank ventilation (PCV) pipe.

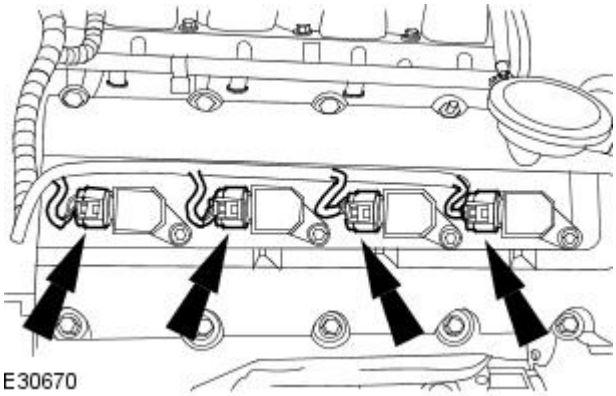


**6.** Disconnect the ignition coil on-plug electrical connectors.

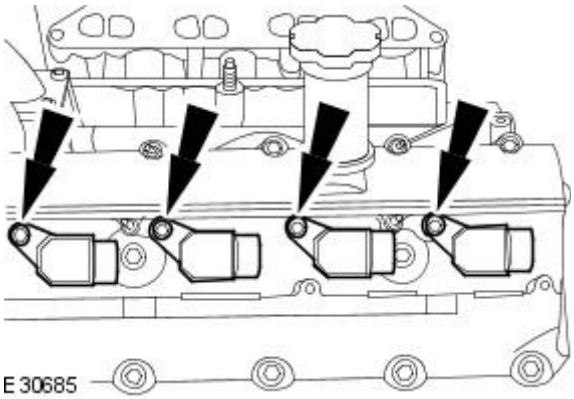


**7.** NOTE: Left-hand shown, right-hand similar.

Remove the ignition coil-on-plugs.

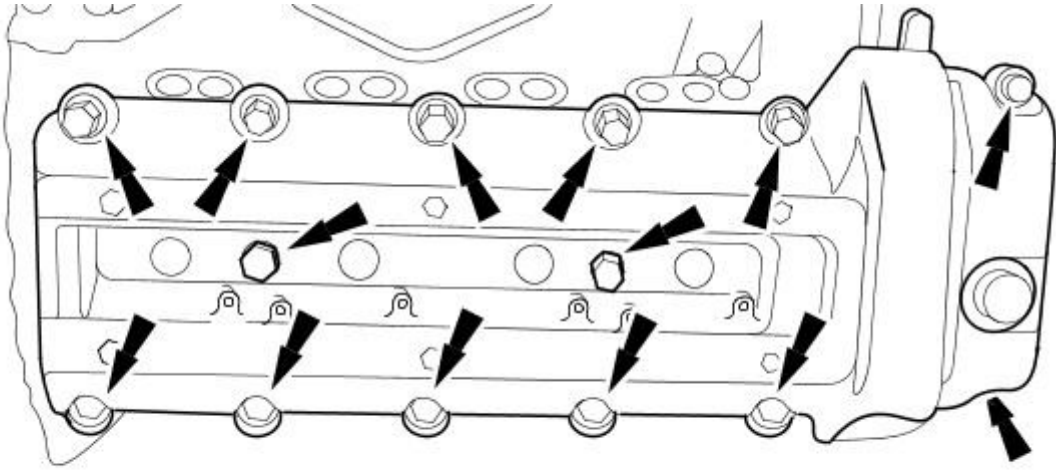


**8.** Remove the valve cover assembly.

- Remove and discard valve cover gaskets.

GETtheMANUALS.org

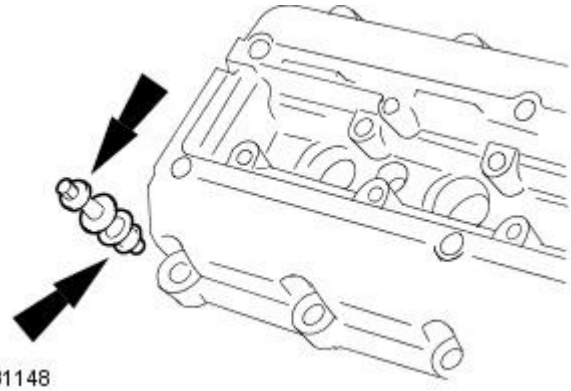

E31148

**9.** NOTE: On removal of the valve cover retaining bolts note their positions in the valve cover.

Remove the valve cover retaining bolts.

- Remove and discard the valve cover retaining bolt O-ring seals.

## Installation

All vehicles

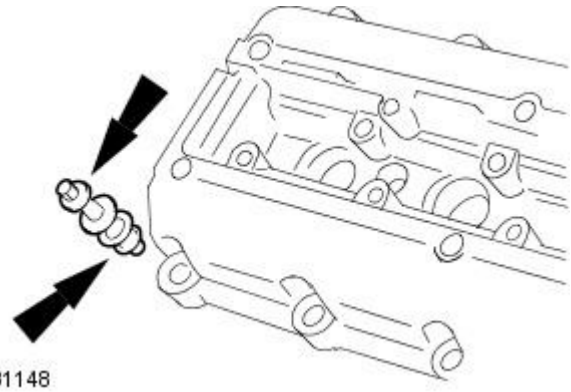

E31148

**1.** NOTE: Install the valve cover retaining bolts to their positions previously noted.

Install the valve cover retaining bolts.

- Install new valve cover retaining bolt O-ring seals.

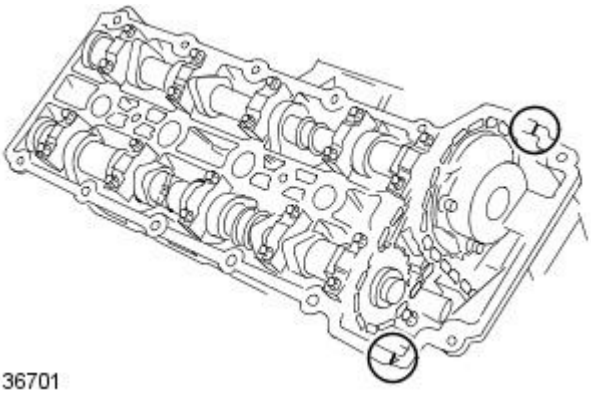

E36701

**2.** Apply bead of silicone gasket sealant or equivalent meeting Jaguar specification on the two places where the cylinder head and front cover join.

- The application of sealant must be 3mm diameter by 12mm long. Install the valve cover immediately after applying the sealant.
- The cover should be fitted directly to the head without smearing the sealant or the seals.

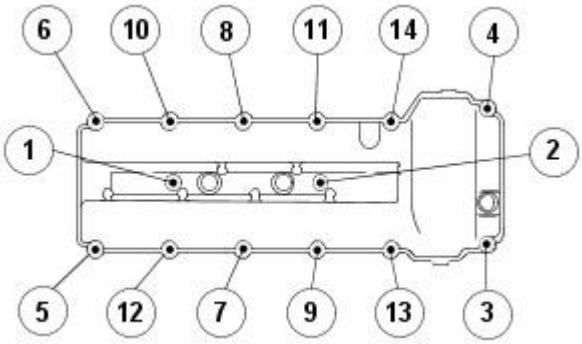


E63483

**3.** Install the valve cover.

- Install new valve cover gaskets.
- Complete the tightening sequence.
- Tighten to 10 Nm.

GETtheMANUALS.org

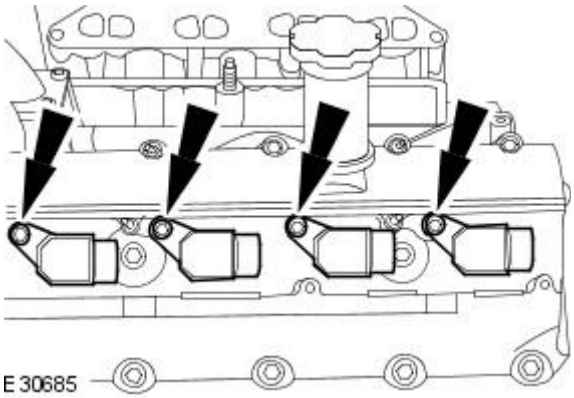


**4.** NOTE: Left-hand shown, right-hand similar.

Install the ignition coil-on-plugs.

- Tighten to 5 Nm.

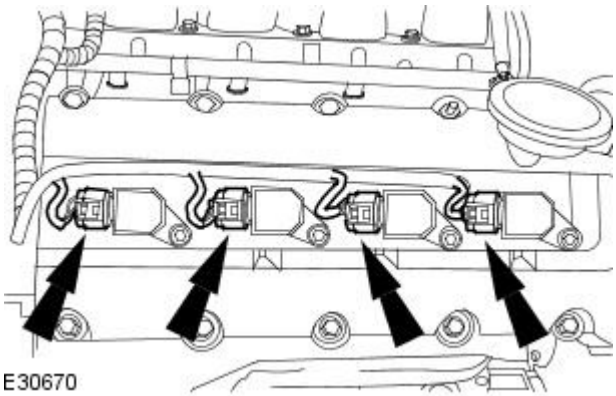


**5.** Connect the ignition coil on-plug electrical connectors.

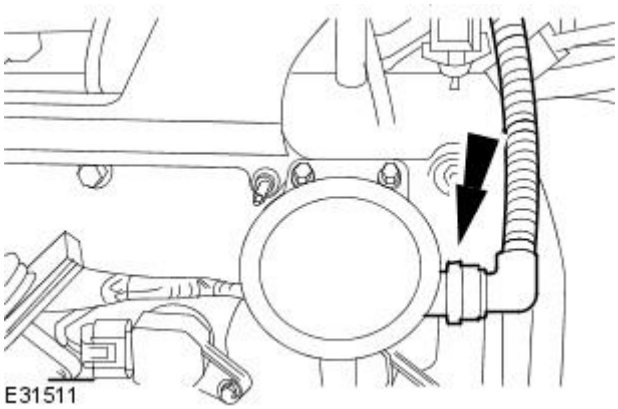


**6.** Connect the PCV pipe.

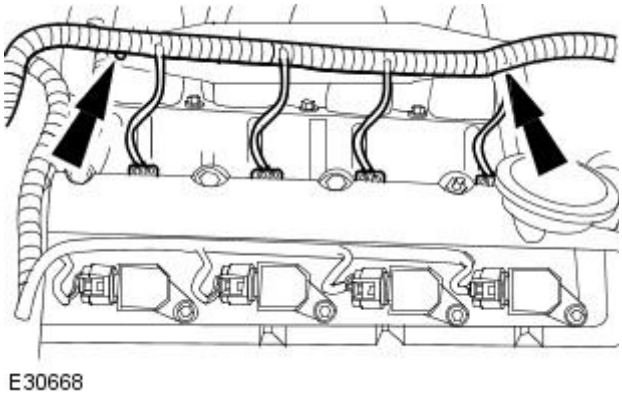


**7.** Attach the engine wiring harness.

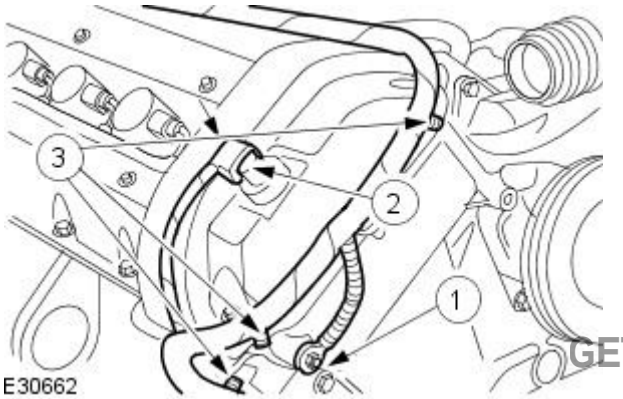


**8.** Attach the engine wiring harness.

1. Attach the ground harness.
2. Connect the VCT oil control solenoid electrical connector.
3. Attach the engine wiring harness.

GETtheMANUALS.org

Vehicles without supercharger

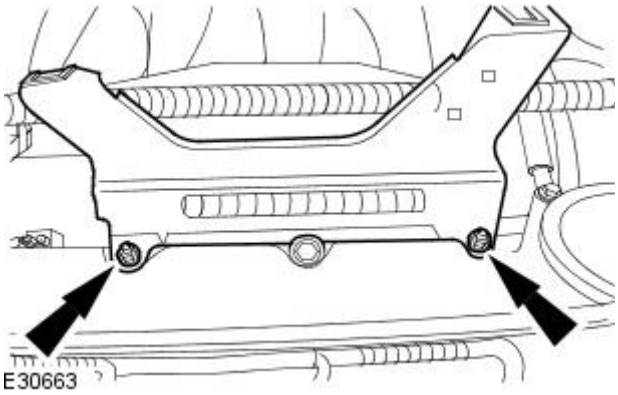


**9.** Install the engine cover bracket.

- Tighten to 6 Nm.

All vehicles

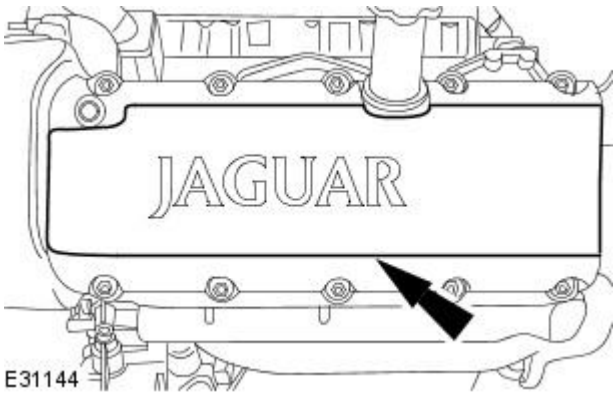


**10.** NOTE: Left-hand shown, right-hand similar.

Install the ignition coil-on-plug cover.

GETtheMANUALS.org

# Engine - V8 4.2L Petrol / V8 S/C 4.2L Petrol - Crankshaft Main Bearing Carrier

Removal and Installation

| Special Tool(s) | |
|---|---|
| 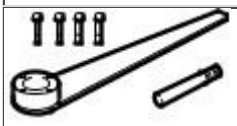 303-191 | Crankshaft locking, main tool<br><br>303-191 |
| 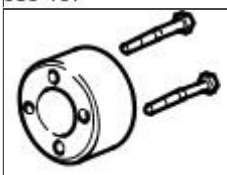 303-191-02 | Adapter<br><br>303-191-02 |
| 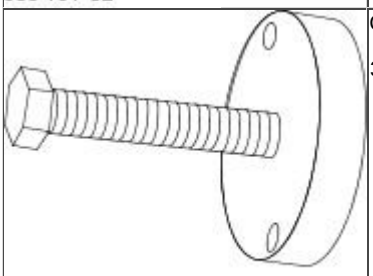 303-588 | Crankshaft pulley/damper remover<br><br>303-588 |
| 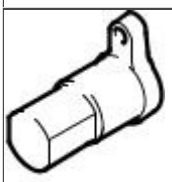 303-645 | Crankshaft setting, main tool<br><br>303-645 |
| 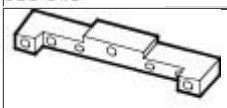 303-530 | Camshaft setting<br><br>303-530 |
| 303-532 | Timing chain tensioning tool<br><br>303-532 |
| 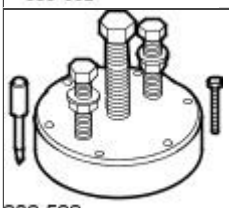 303-538 | Crankshaft rear oil seal remover/replacer<br><br>303-538 |
| 303-750 | Crankshaft front seal installer<br><br>303-538 |
| 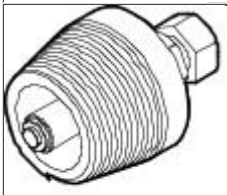 303-751 | Remover, crankshaft front seal<br><br>303-751 |

## Removal

All vehicles

GETtheMANUALS.org

1. Remove the engine from the vehicle.
2. Mount the engine to an engine stand.

Vehicles without supercharger

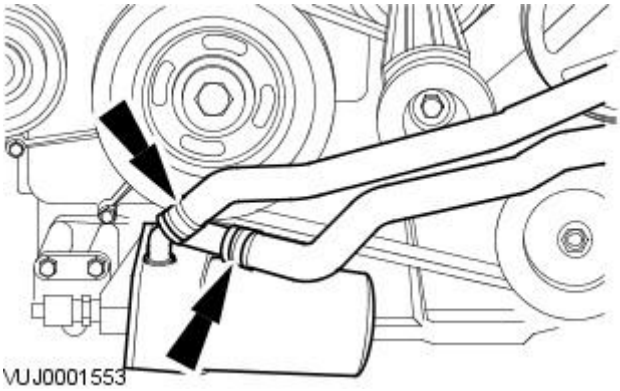


**3.** Disconnect the oil cooler hoses.

Vehicles with supercharger

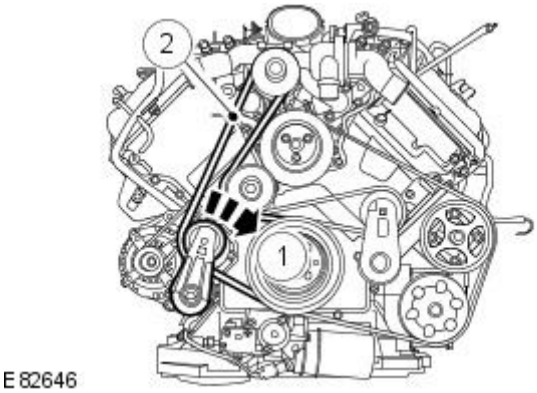


**4.** Detach the supercharger belt.

- Use a ½ inch square drive bar to rotate the supercharger belt tensioner.
- Detach the supercharger belt.

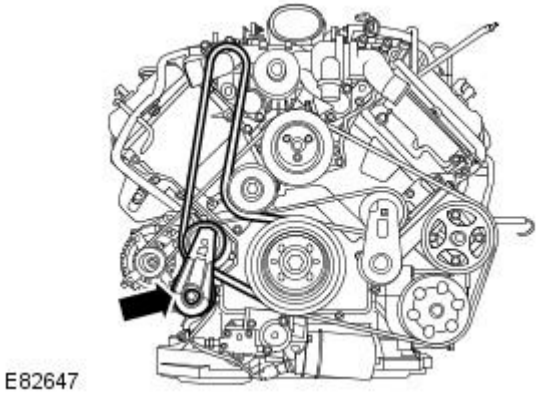


**5.** Remove the supercharger belt tensioner.

- Remove the supercharger belt.

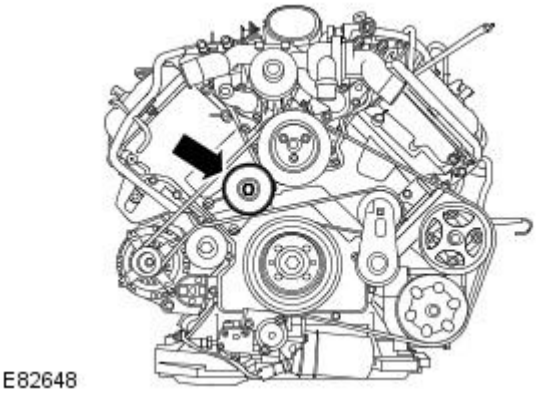


**6.** Remove the supercharger belt idler pulley.

- Remove the retaining bolt.

GETtheMANUALS.org

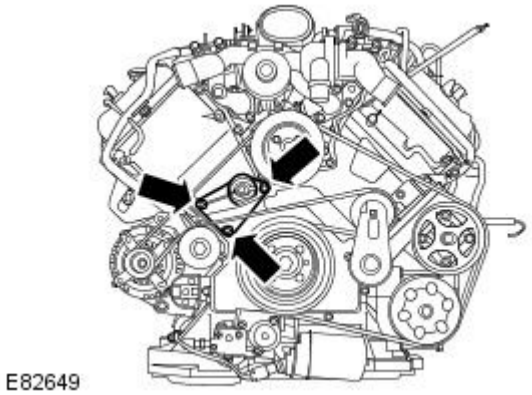


**7.** Remove the mounting bracket.

- Remove the retaining bolts.

All vehicles

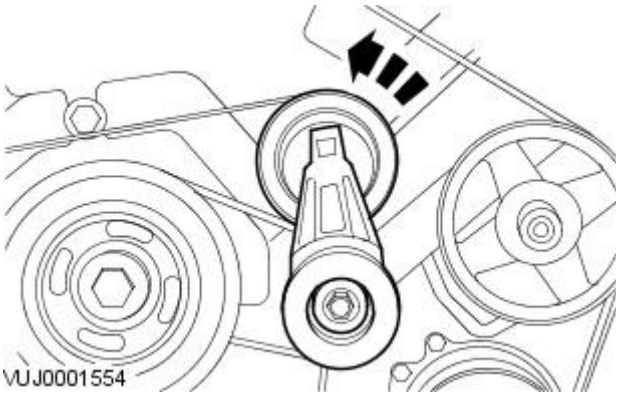


**8.** Detach the accessory drive belt.

- Rotate the accessory drive belt tensioner counter-clockwise.
- Detach the accessory drive belt.

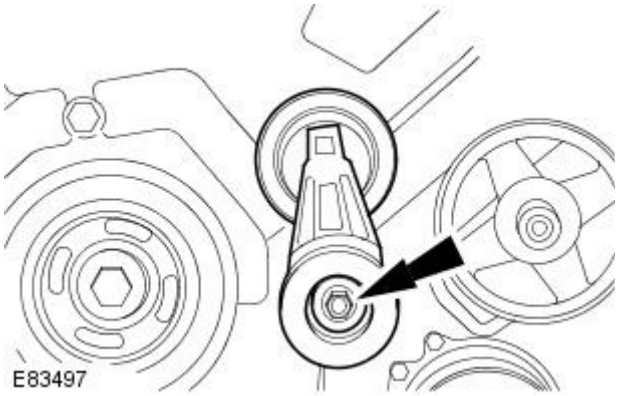


**9.** Remove the accessory drive belt tensioner.

- Remove the accessory drive belt.

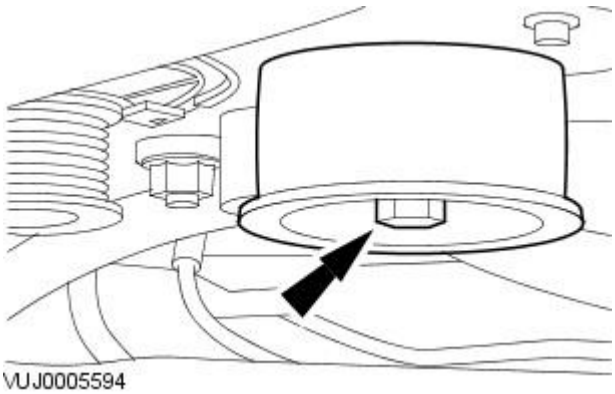


**10.** Remove the accessory drive belt idler pulley.

GETtheMANUALS.org

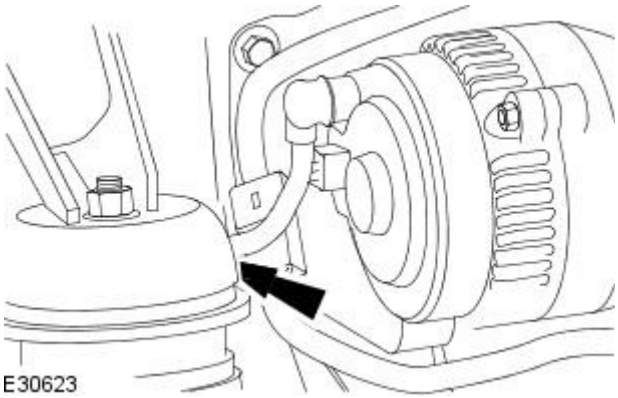


**11.** Detach the battery positive cable.

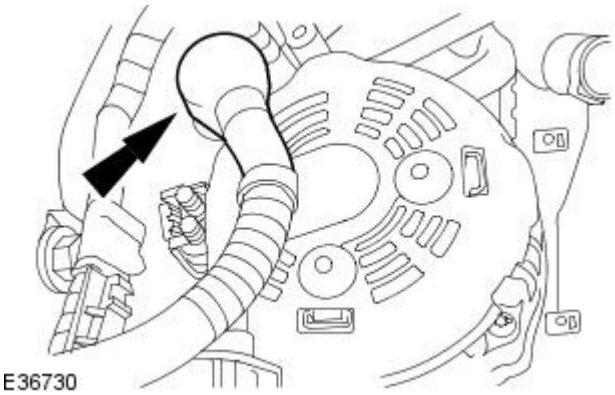


**12.** Detach the generator battery positive cable protective cover.

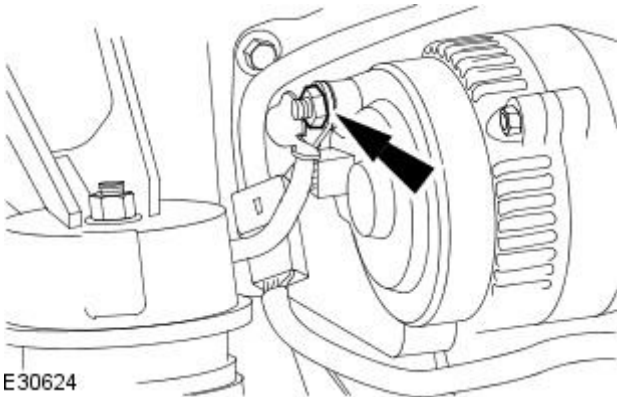


**13.** Remove the battery positive cable.

- Remove the retaining nut.

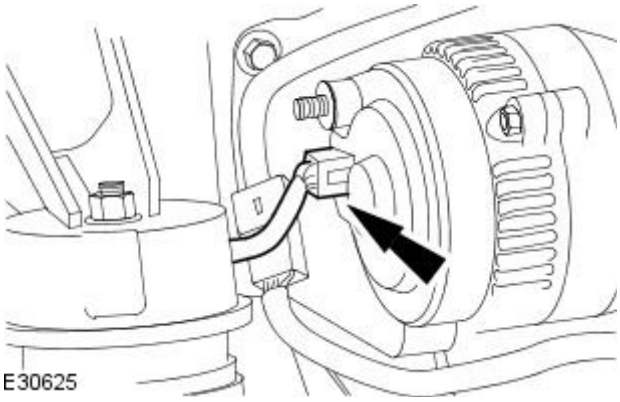


**14.** Disconnect the generator electrical connector.

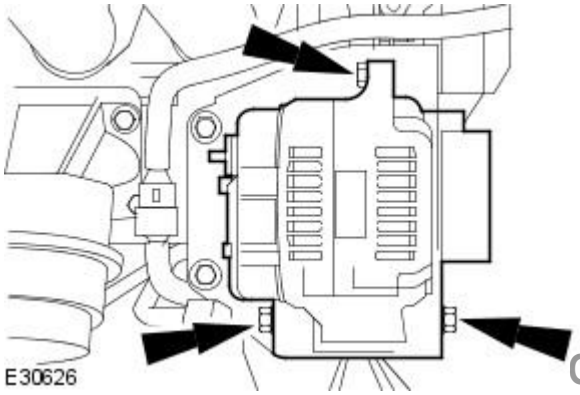


**15.** Remove the generator.

GETtheMANUALS.org

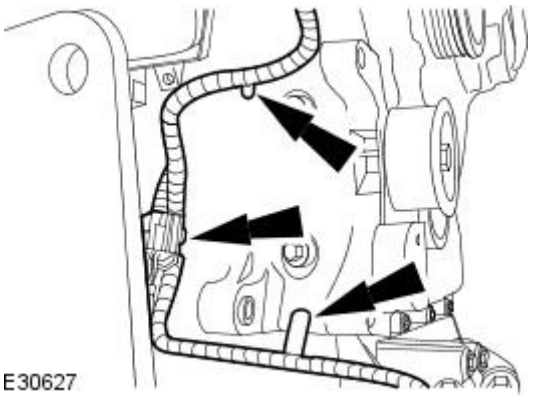


**16.** Detach the engine wiring harness.

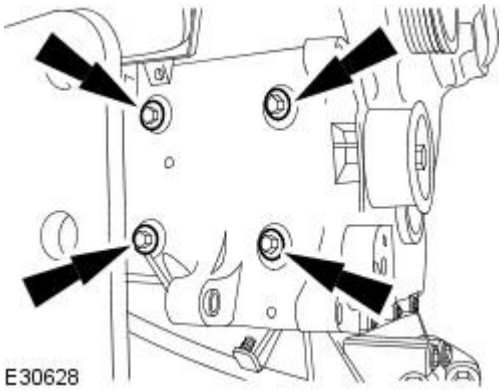


**17.** Remove the generator mounting bracket.

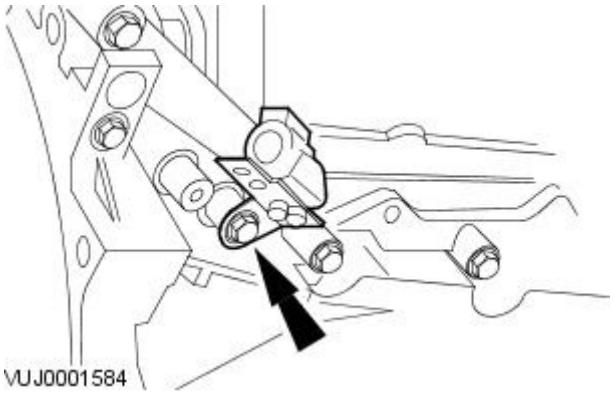


**18.** Detach the right-hand heated oxygen sensor (HO2S) retaining bracket.

- Remove the retaining bolt.

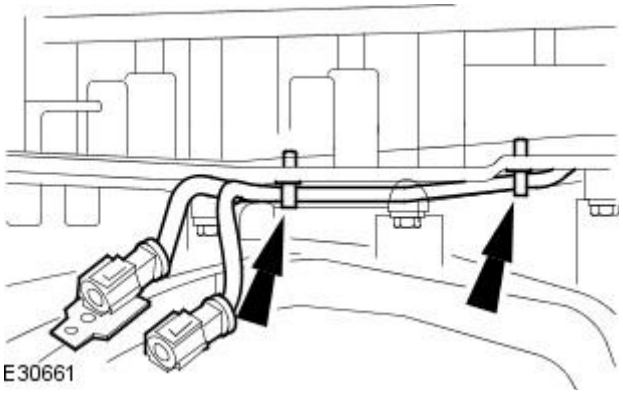


**19.** Detach the HO2S wiring harness, from the engine.

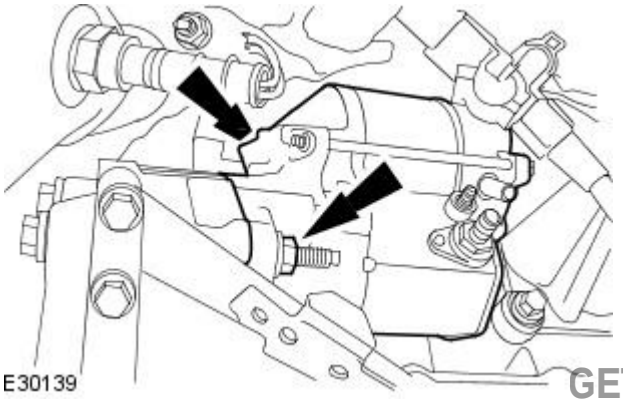


**20.** Remove the starter motor.

GETtheMANUALS.org

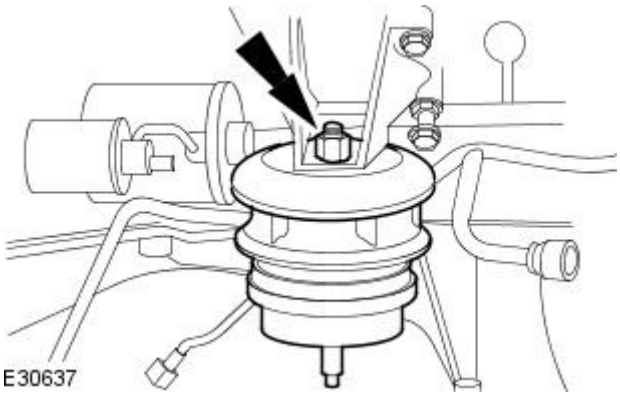


**21.** NOTE: Right-hand shown, left-hand similar.

Remove both engine mounts.

- Remove the retaining nuts.

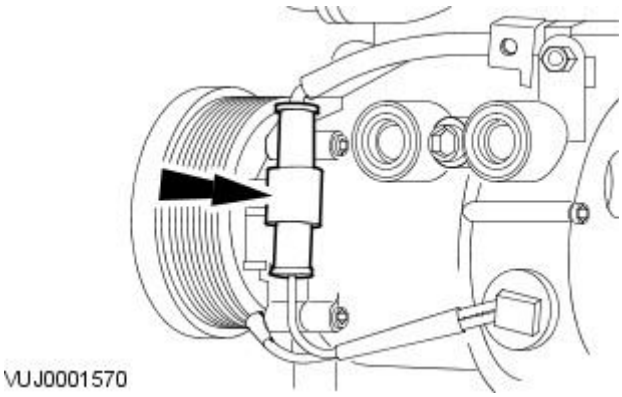


**22.** Disconnect the air conditioning compressor electrical connector.

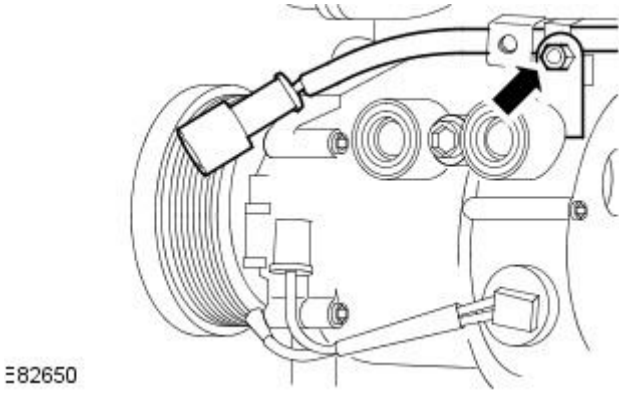


**23.** Detach the A/C compressor wiring harness.

- Remove the retaining nut.

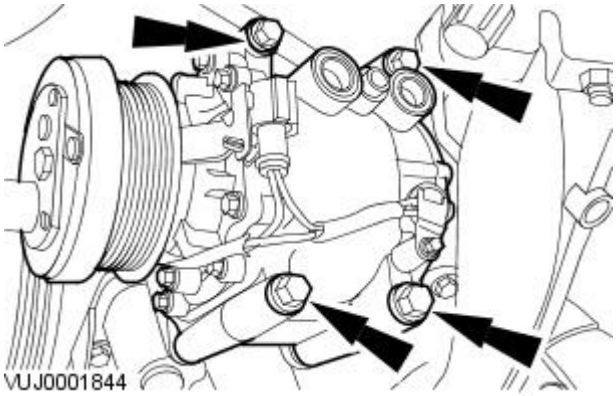


**24.** Remove the A/C compressor.

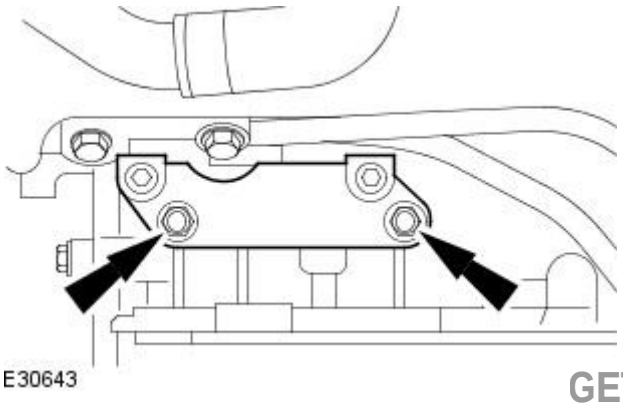


**25.** Remove the air conditioning compressor mounting bracket.

GETtheMANUALS.org

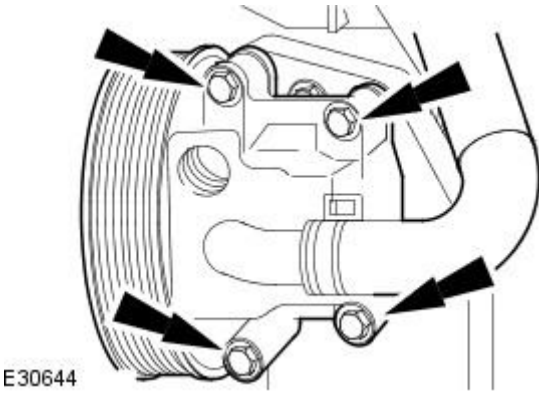


**26.** Remove the power steering pump.

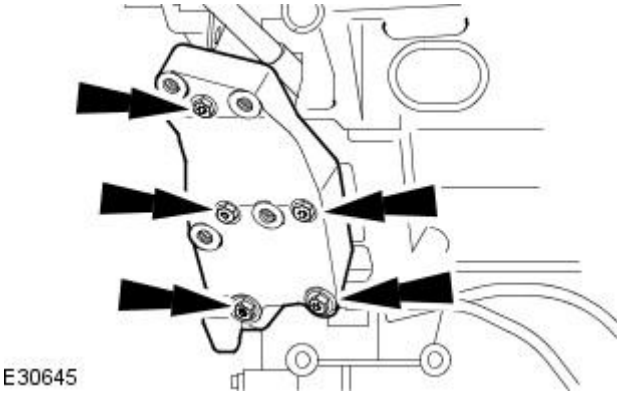


**27.** Remove the power steering pump mounting bracket.

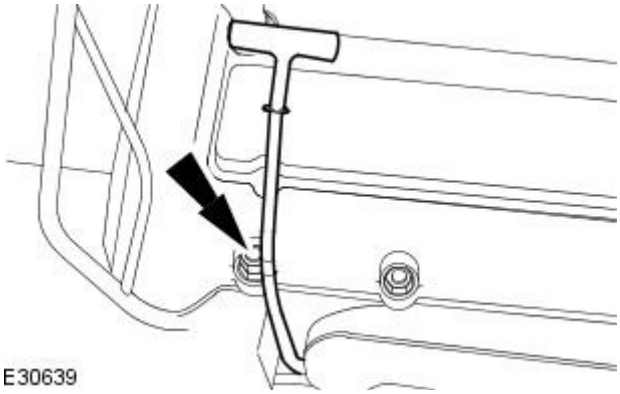


**28.** Remove the oil level indicator and tube.

- Remove and discard the O-ring seal.

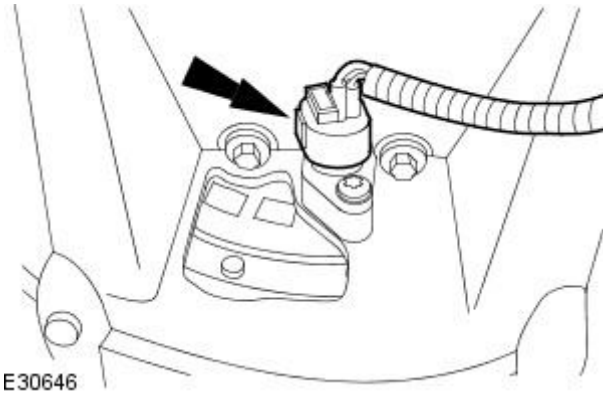


**29.** Disconnect the crankshaft position (CKP) sensor electrical connector.

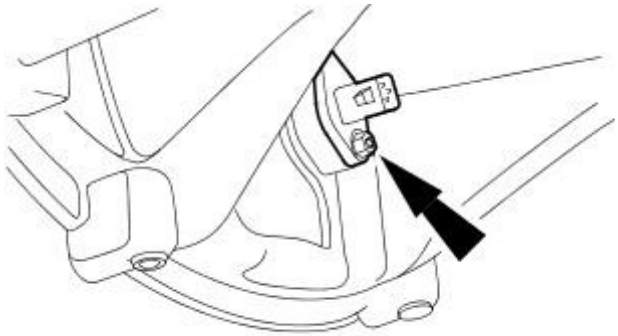


**30.** Remove the CKP sensor.

GETtheMANUALS.org

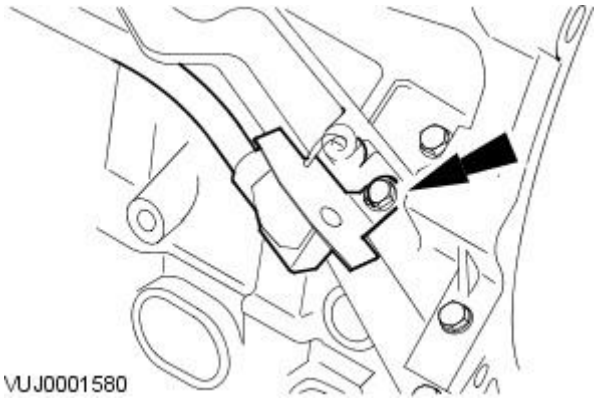


**31.** Detach the left-hand heated oxygen sensor (HO2S) wiring harness.

- Remove the retaining bolt.

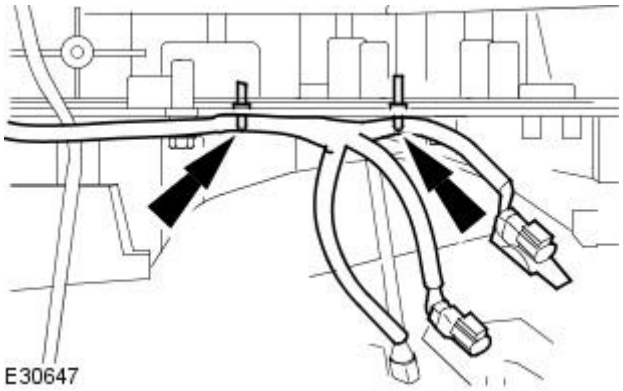


**32.** Detach the engine wiring harness from the cylinder block.

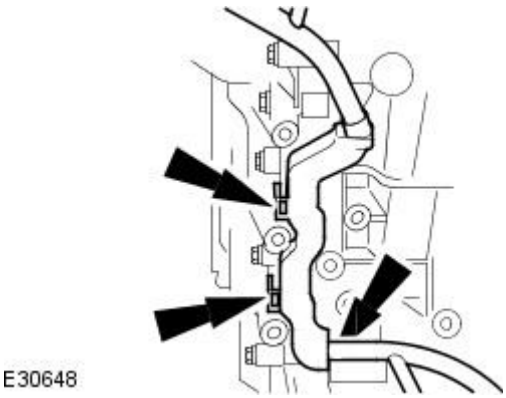


**33.** Detach the engine wiring harness.

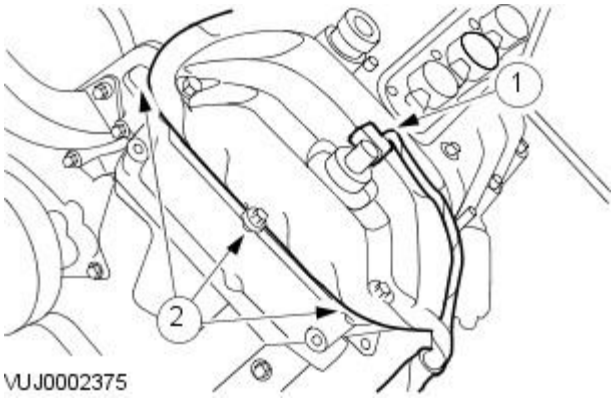


**34.** Detach the engine wiring harness.

- Disconnect the variable camshaft timing (VCT) solenoid electrical connector.
- Detach the engine wiring harness.

Vehicles without supercharger

GETtheMANUALS.org

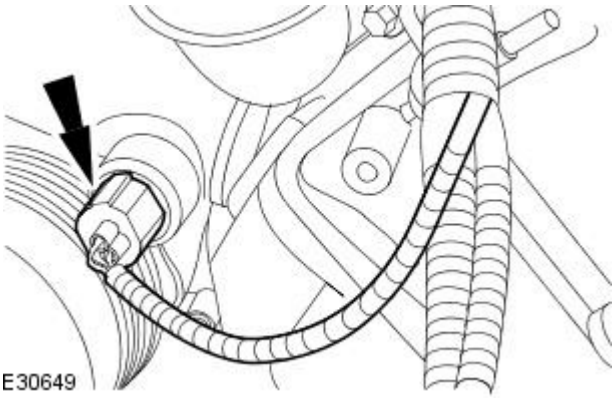


**35.** Disconnect the engine coolant temperature (ECT) sensor electrical connector.

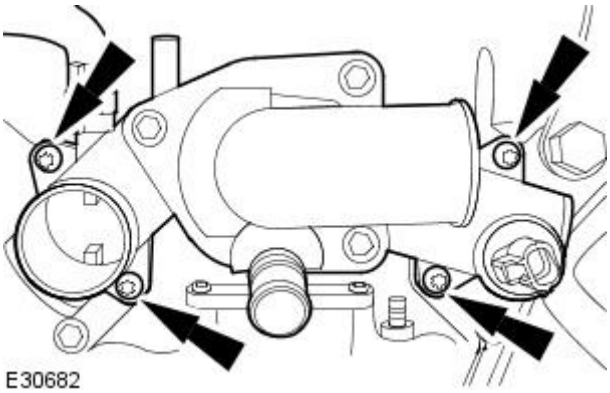


**36.** Remove the thermostat housing.

- Remove and discard the O-ring seals.

Vehicles with supercharger

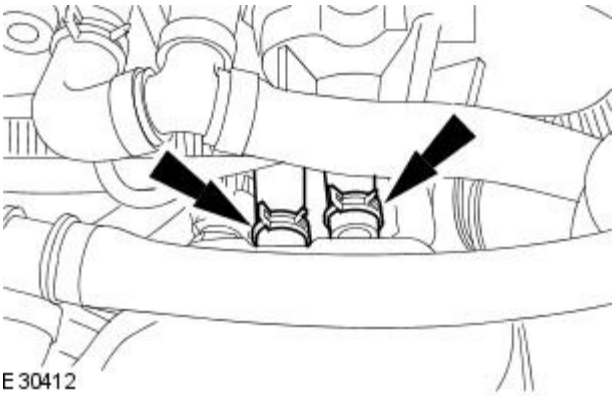


**37.** Disconnect the thermostat housing hoses

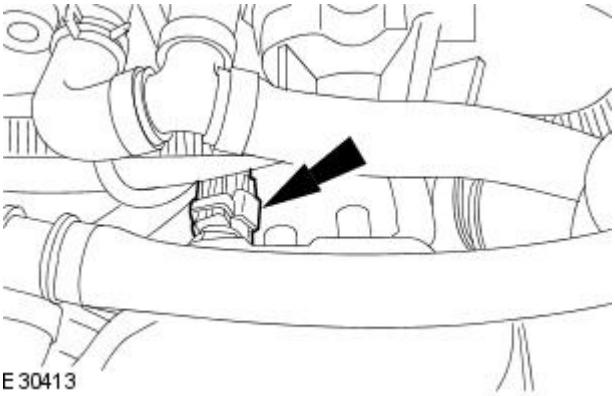


**38.** Disconnect the ECT sensor electrical connector.

GETtheMANUALS.org

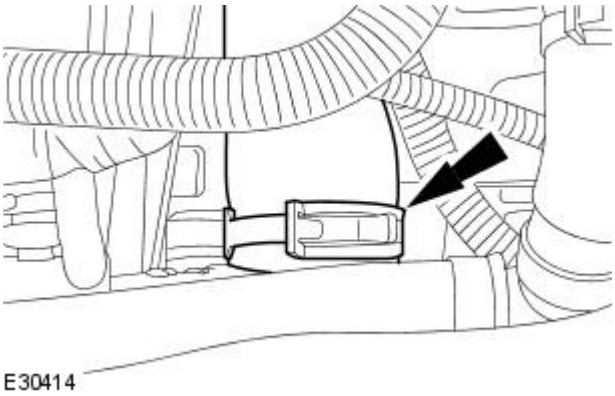


**39.** Reposition the thermostat housing hose retaining clip.

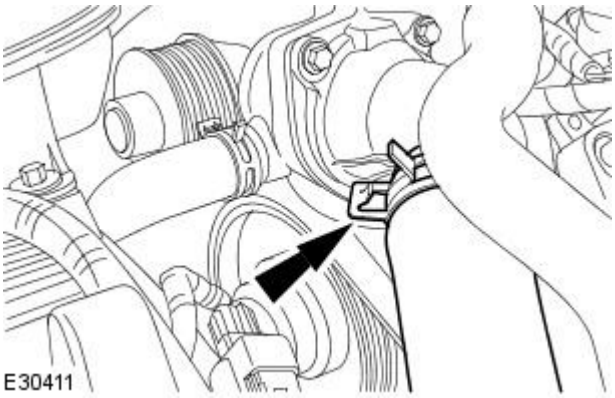


**40.** Disconnect the hose.

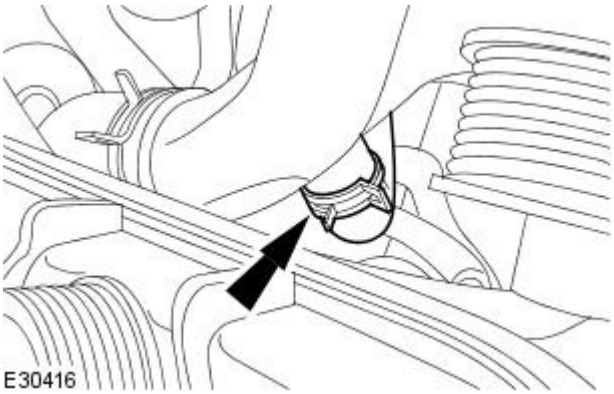


**41.** Disconnect the heater supply hose from the thermostat housing.

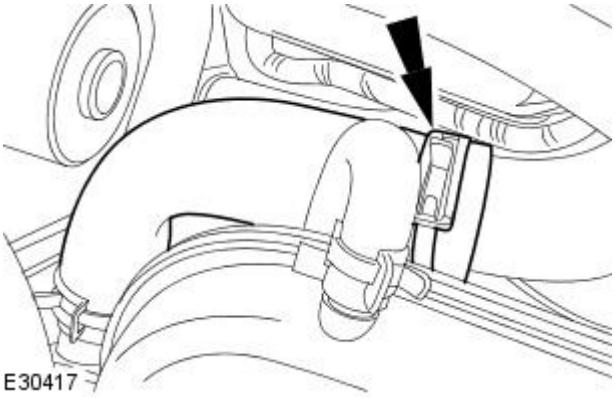


**42.** Disconnect the water pump outlet hose.

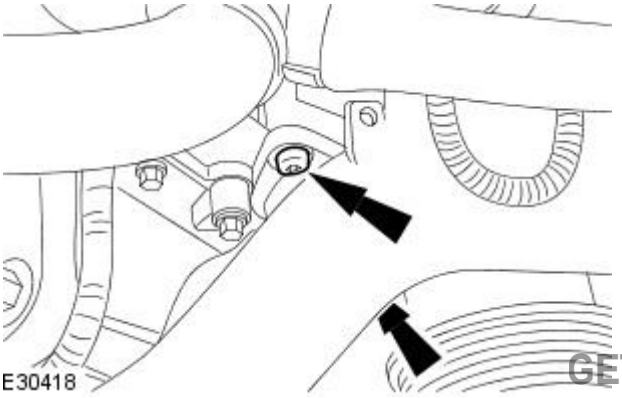


**43.** Remove the thermostat housing retaining bolts.

GETtheMANUALS.org

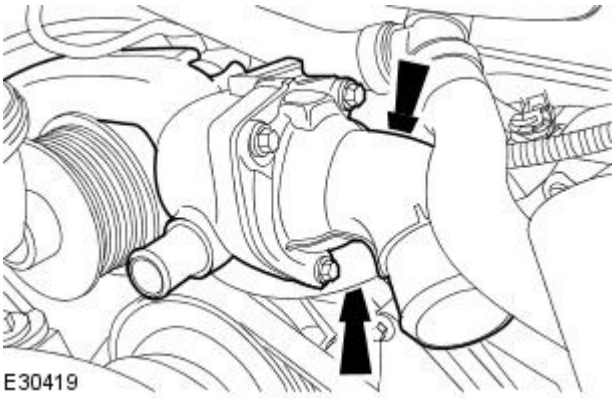


**44.** Remove the thermostat housing.

- Remove and discard thermostat housing O-ring seals.

Vehicles without supercharger

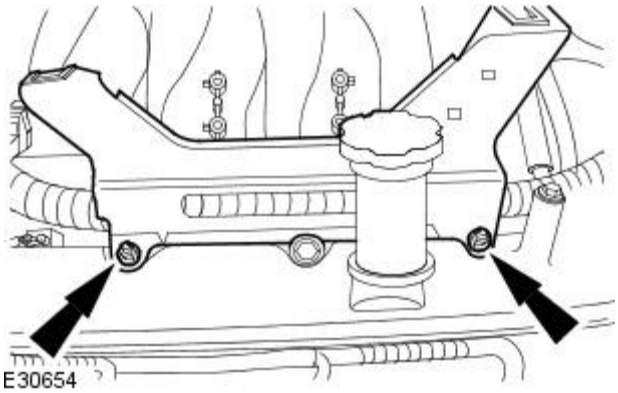


**45.** Remove the engine cover left-hand retaining bracket.

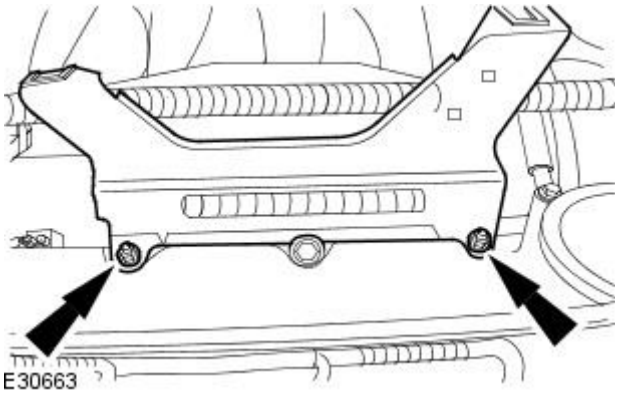


**46.** Remove the engine cover right-hand retaining bracket.

All vehicles

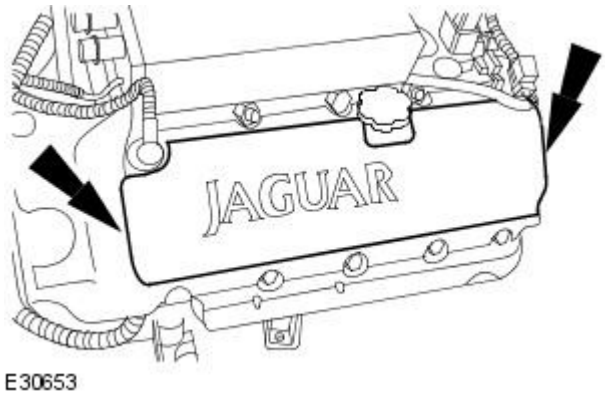


**47.** NOTE: Left-hand shown, right-hand similar.

Remove both ignition coil covers.

GETtheMANUALS.org

**48.** Disconnect the left-hand ignition coil electrical connectors.

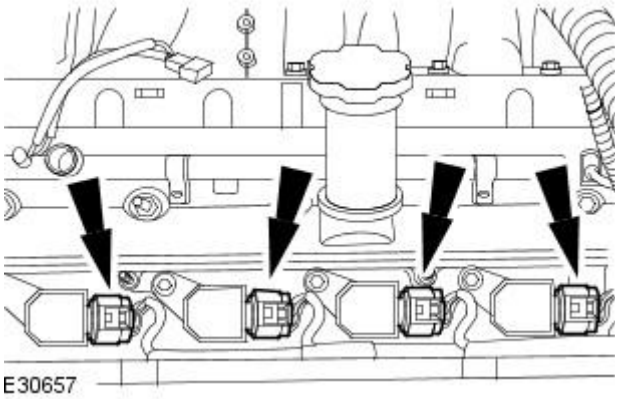


**49.** Detach the left-hand ignition coil wiring harness.

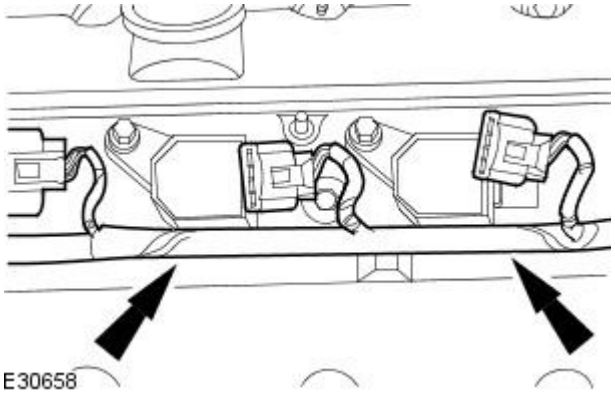


**50.** Detach the left-hand ignition coil wiring harness.

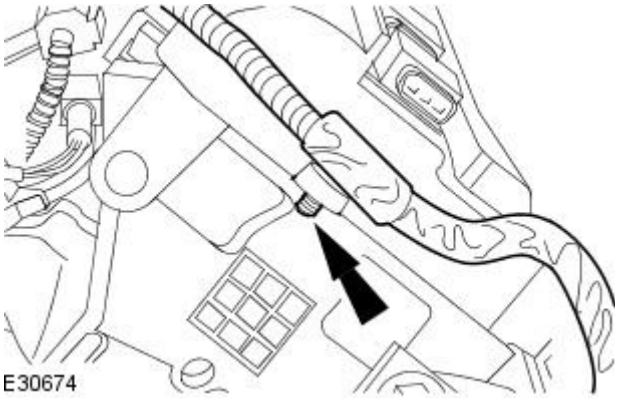


**51.** Detach the right-hand ignition coil wiring harness.

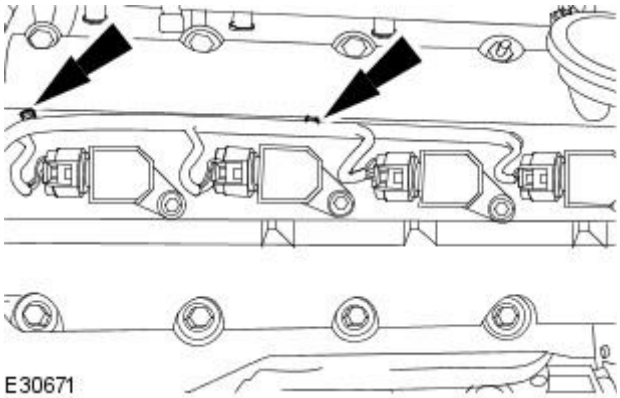


**52.** Disconnect the right-hand ignition coil electrical connectors.

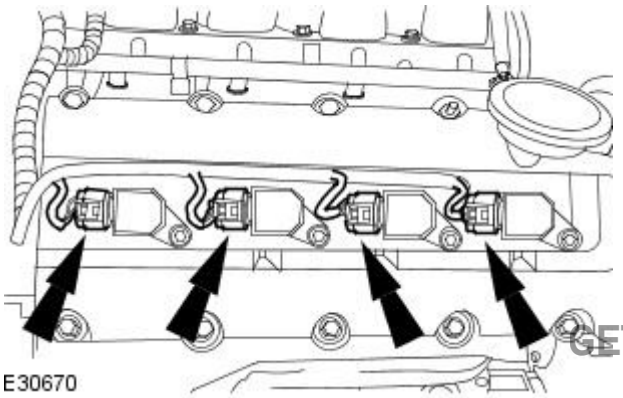


GETtheMANUALS.org

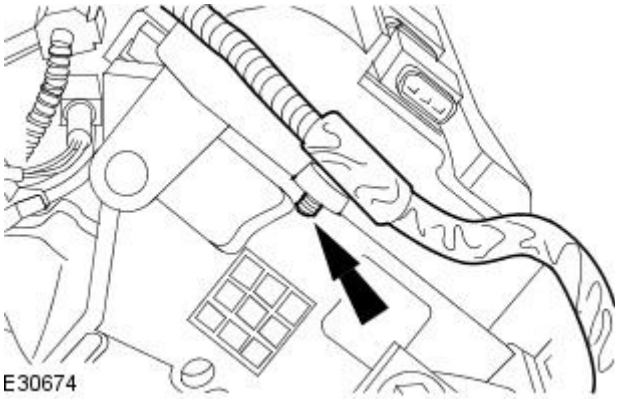


**53.** Detach the right-hand ignition coil wiring harness.

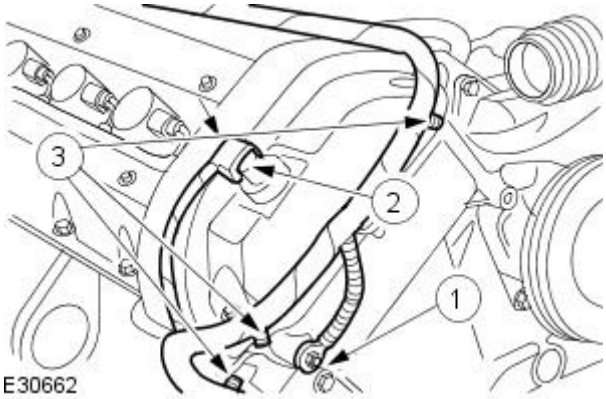


**54.** Detach the engine wiring harness.

- Detach the ground cable.
- Disconnect the variable camshaft timing (VCT) solenoid electrical connector.
- Detach the engine wiring harness.

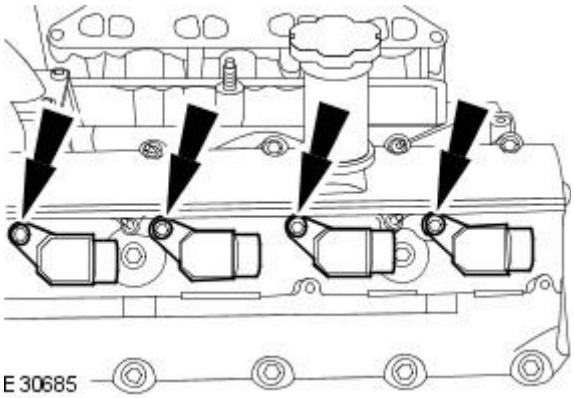


**55.** NOTE: Left-hand shown, right-hand similar

Remove the ignition coils.

- Remove the retaining bolts.

Vehicles without supercharger

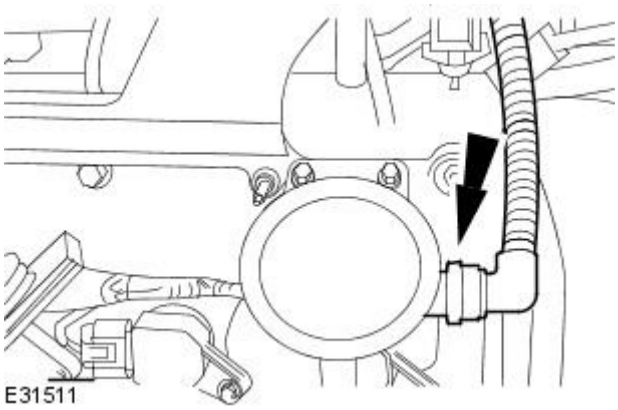


**56.** Disconnect the positive crankcase ventilation (PCV) pipe.

All vehicles

**57.** Remove the right-hand valve cover.

- Remove and discard the valve cover gaskets.

GETtheMANUALS.org

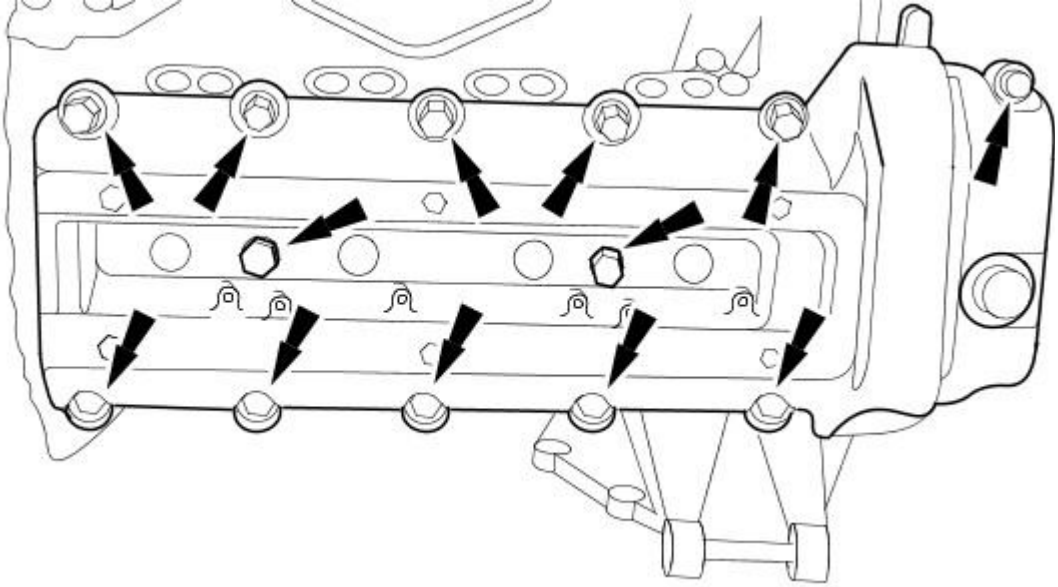

VUJ0002395

**58.** Remove the left-hand valve cover.

- Remove and discard the valve cover gaskets.

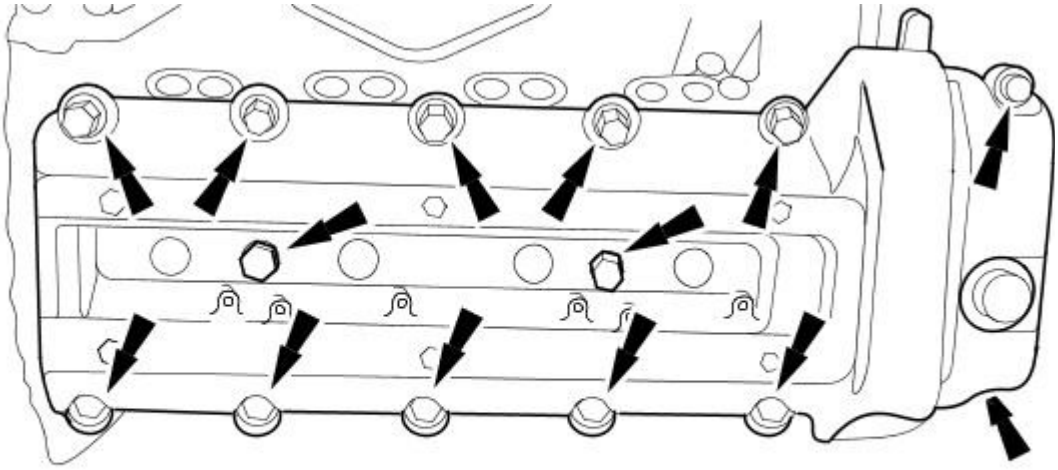

E30696

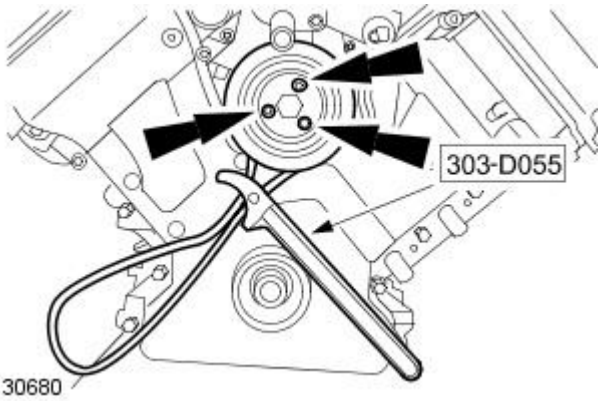


E30680

**59.** Using the special tool, remove the water pump pulley.

- Using the special tool, retain the water pump pulley.

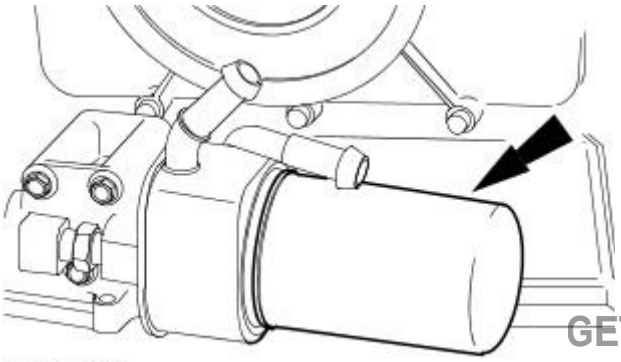

VUJ0001576

**60.** NOTE: Place a suitable container underneath the oil filter housing to prevent oil spillage.

Remove the oil filter.

GETtheMANUALS.org

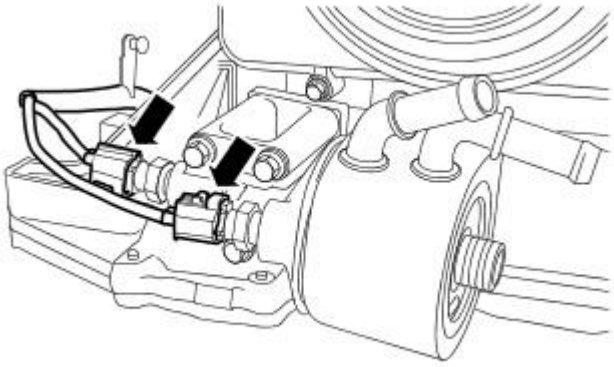

E82652

**61.** Disconnect the oil pressure switch and oil temperature sensor electrical connectors.

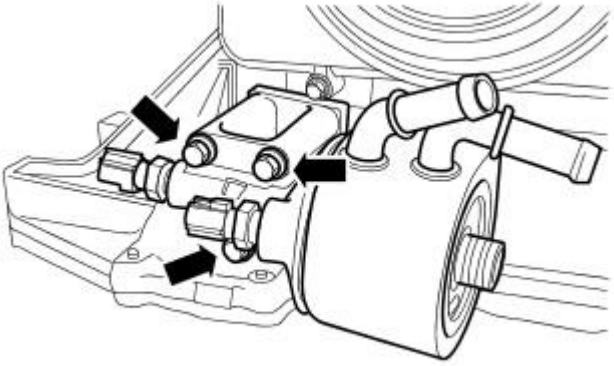

E82653

**62.** Remove the oil filter housing.

- Remove and discard the O-ring seal.

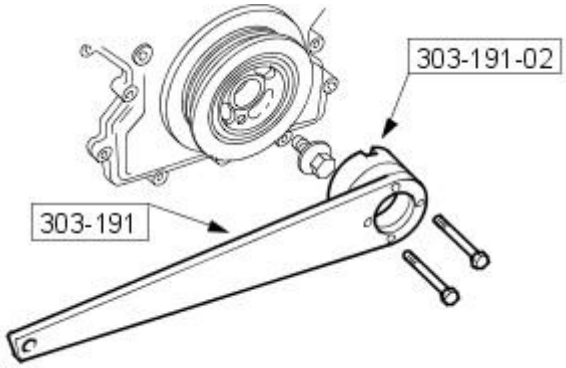


E31149

**63.** CAUTION: Under no circumstances should the crankshaft setting peg 303-645 be used in the following operations to lock the crankshaft.

• NOTE: The crankshaft retaining bolt will be very tight.

Using special tools, retain the crankshaft pulley.

- Remove and discard the crankshaft pulley bolt.

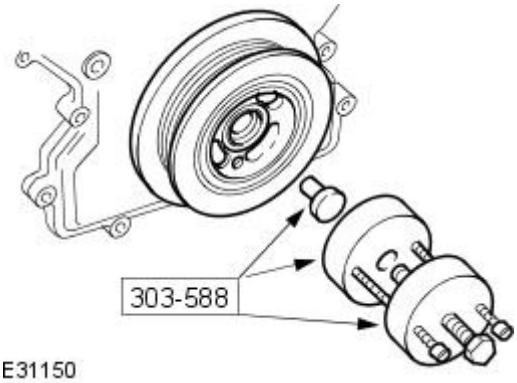


E31150

**64.** Remove the special tools.

**65.** NOTE: The crankshaft pulley will be very tight.

Using special tools, remove the crankshaft pulley.

- Collect the locking ring.
- Remove and discard the O-ring seal.

GETtheMANUALS.org

**66.** Using the special tool, remove the crankshaft front seal.

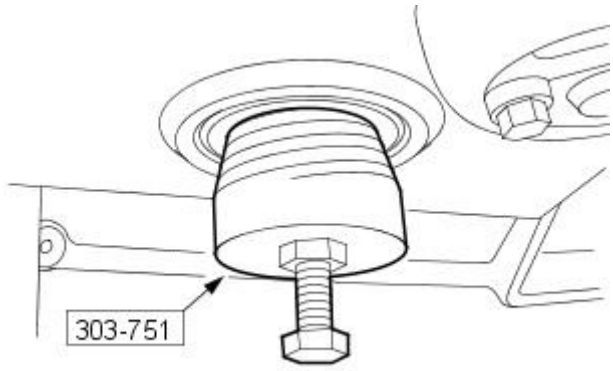


E31171

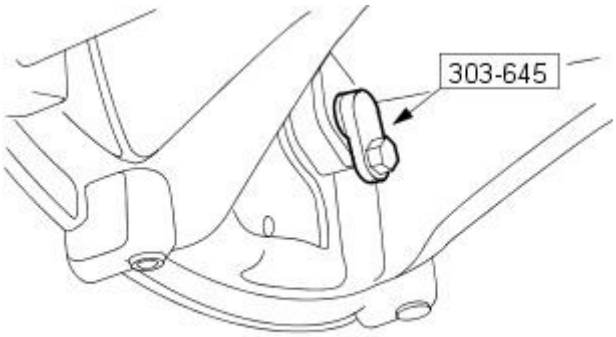


VUJ0002400

**67.** CAUTIONS:

Make sure the spark plugs are removed to enable the engine to rotate freely.

Do not rotate the crankshaft counterclockwise. The timing chains may bind causing engine damage.

Rotate the crankshaft clockwise to position the engine to top dead center (TDC) No. 1 cylinder

Install the special tool.

**68.** Remove the engine front cover.

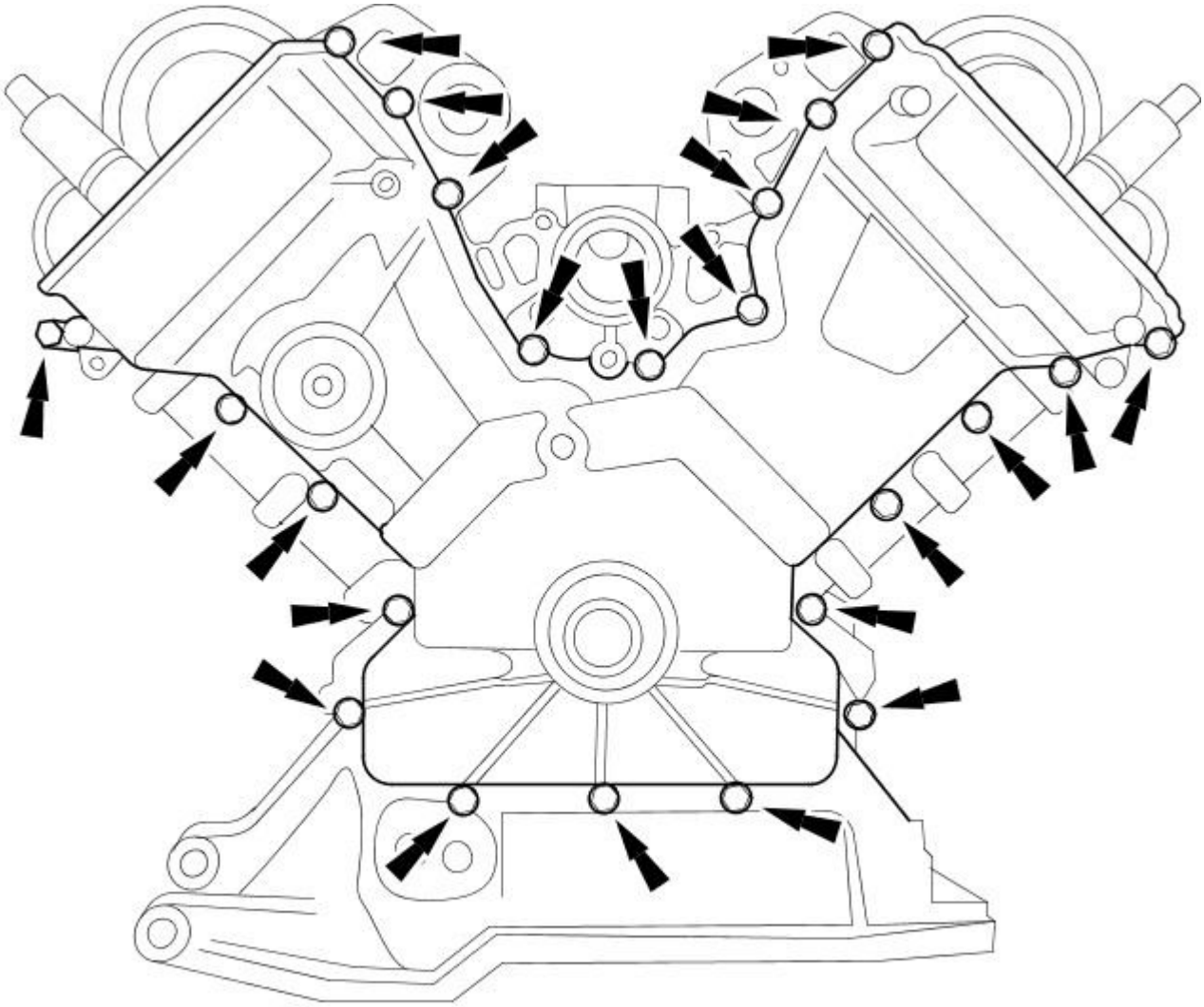

VUJ0002398

GETtheMANUALS.org

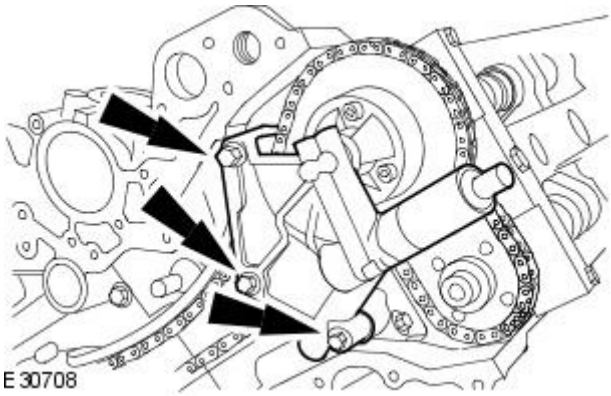


**69.** Remove the left-hand VCT oil control unit housing.

- Remove and discard the O-ring seals.

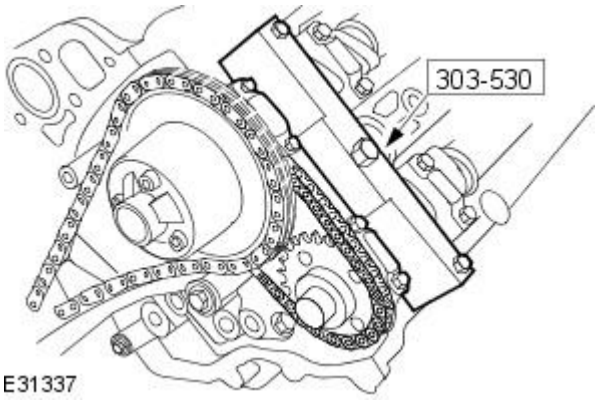


**70.** Install the special tool to the left-hand cylinder head.

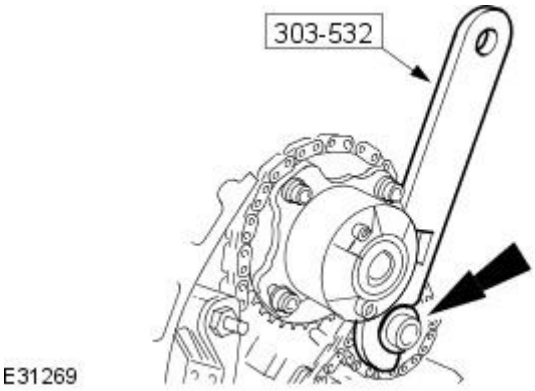


**71.** Loosen the left-hand exhaust camshaft sprocket retaining bolt.

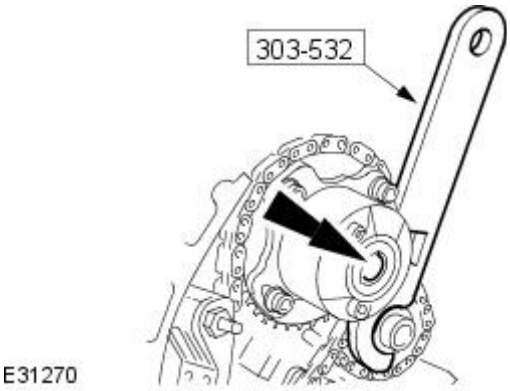


**72.** Loosen the left-hand inlet camshaft sprocket retaining bolt.

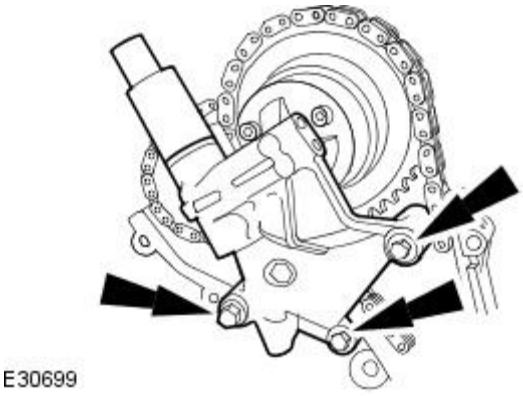


**73.** Remove the right-hand VCT oil control unit housing.

- Remove and discard the O-ring seals.

GETtheMANUALS.org

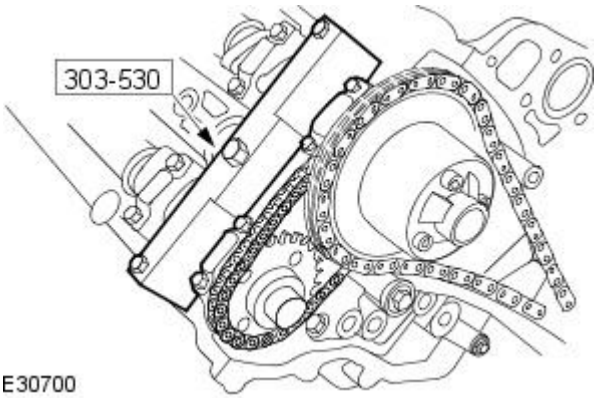


**74.** Install the special tool to the right-hand cylinder head.

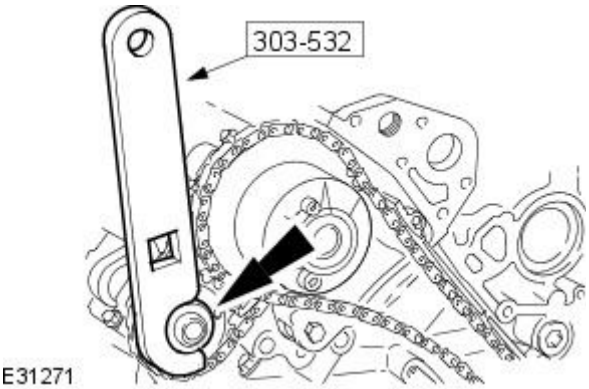


**75.** Loosen the right-hand exhaust camshaft sprocket retaining bolt.

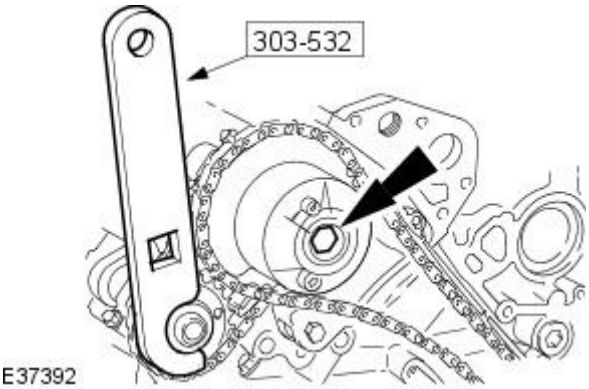


**76.** Loosen the right-hand exhaust camshaft sprocket retaining bolt.

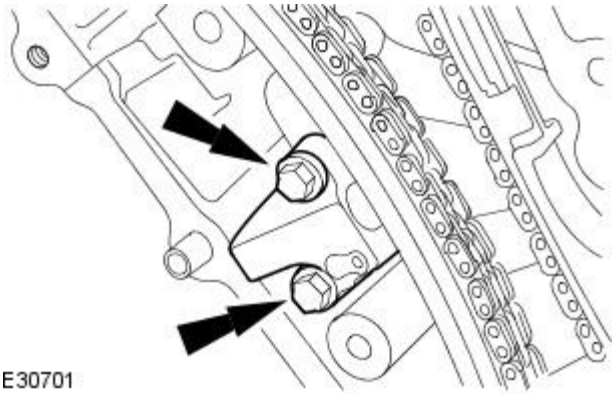


**77.** Remove the right-hand primary timing chain tensioner assembly.

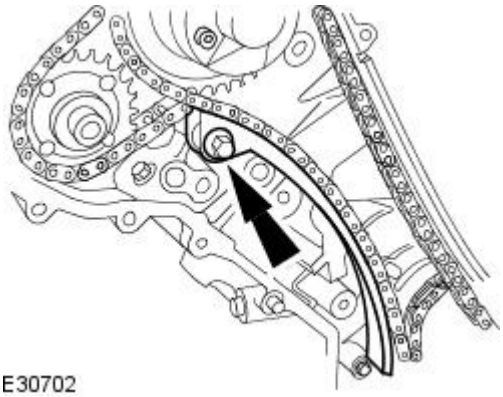


**78.** Remove the right-hand primary timing chain tensioner guide.

GETtheMANUALS.org

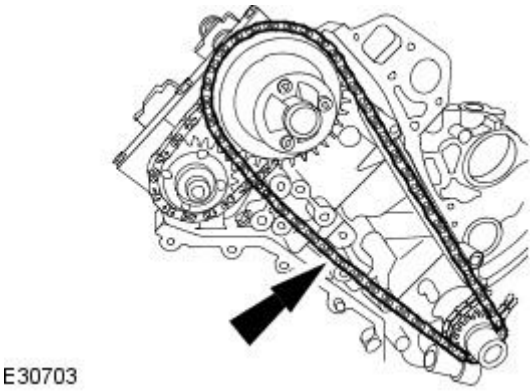


**79.** Remove the right-hand primary timing chain.

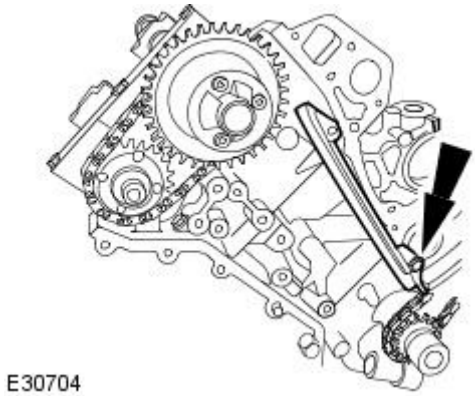


**80.** Remove the right-hand primary timing chain guide.

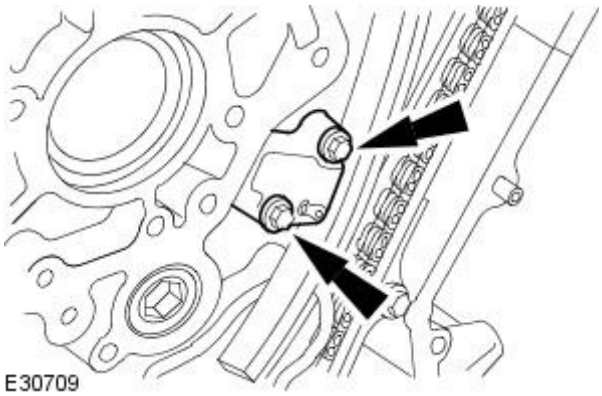


**81.** Remove the left-hand primary timing chain tensioner assembly.

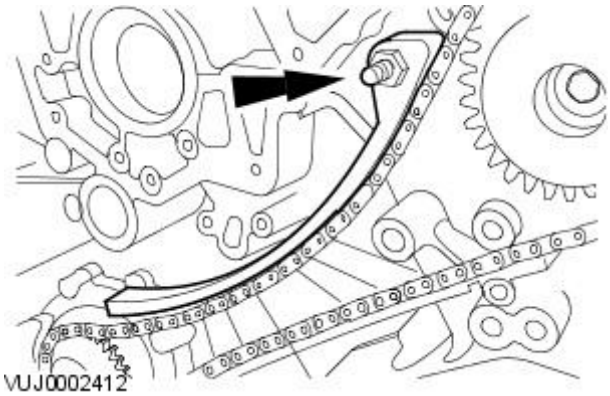


**82.** Remove the left-hand primary timing chain tensioner guide.

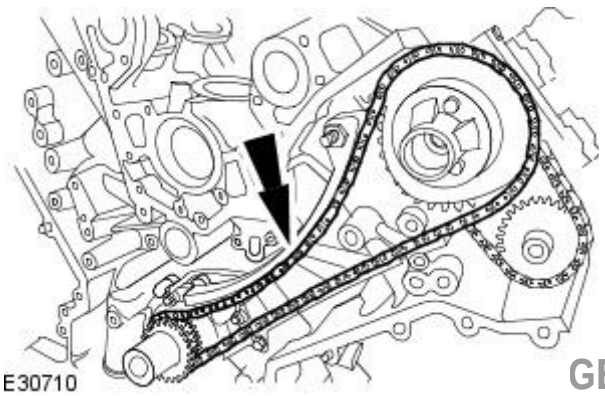


**83.** Remove the left-hand primary timing chain.

GETtheMANUALS.org

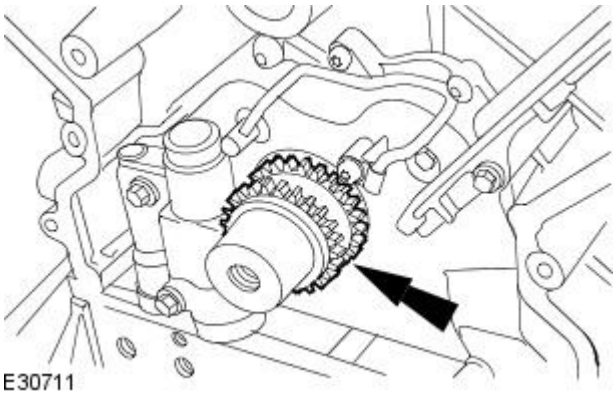


**84.** Remove the crankshaft sprocket.

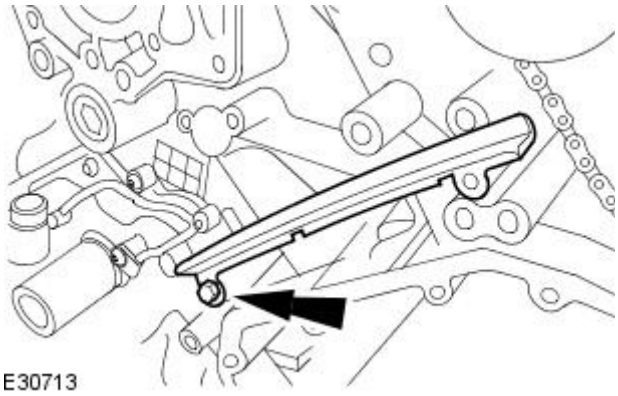


**85.** Remove the left-hand primary timing chain tensioner guide.

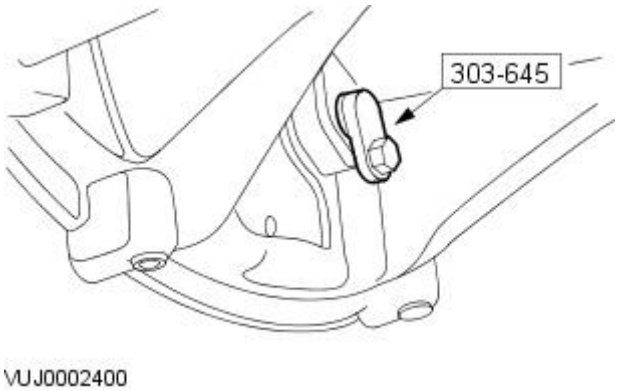


**86.** Remove the special tool.

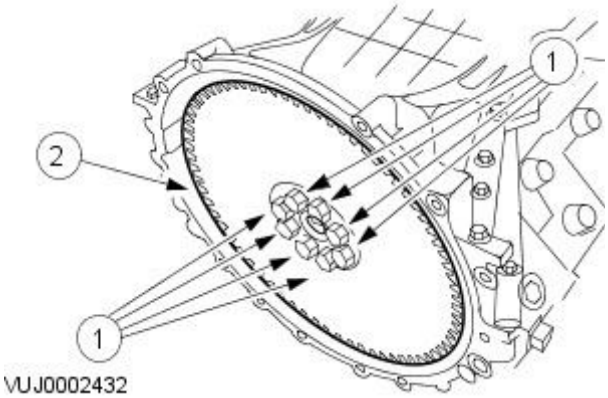


**87.** CAUTION: The bolts can only be used 3 times, mark the bolts with a center punch. If 2 punch marks are visible, discard the bolts.

Remove the drive plate.

- Remove the 8 bolts.

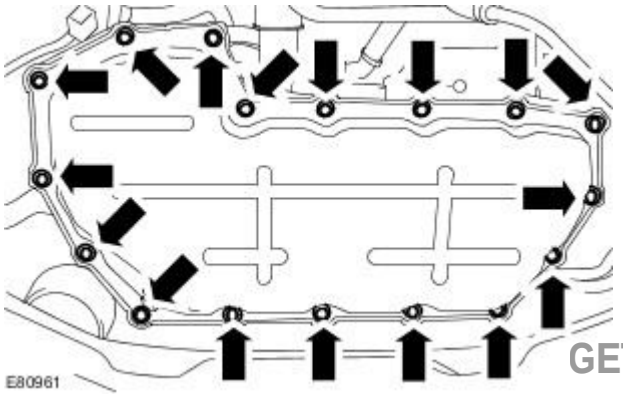


**88.** Remove the lower oil pan.

- Remove and discard the gasket.

GETtheMANUALS.org

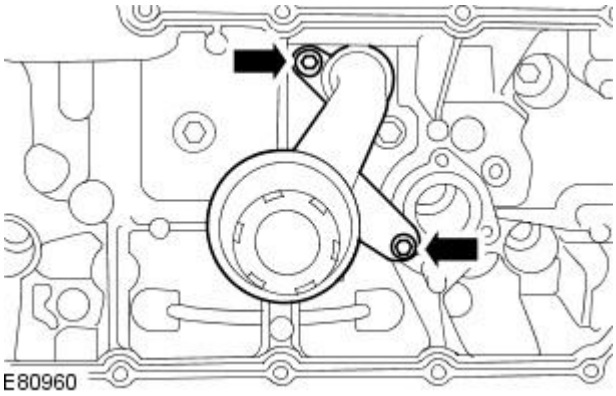


**89.** Remove the oil strainer.

- Remove and discard the O-ring seal.

**90.** Remove the upper oil pan.

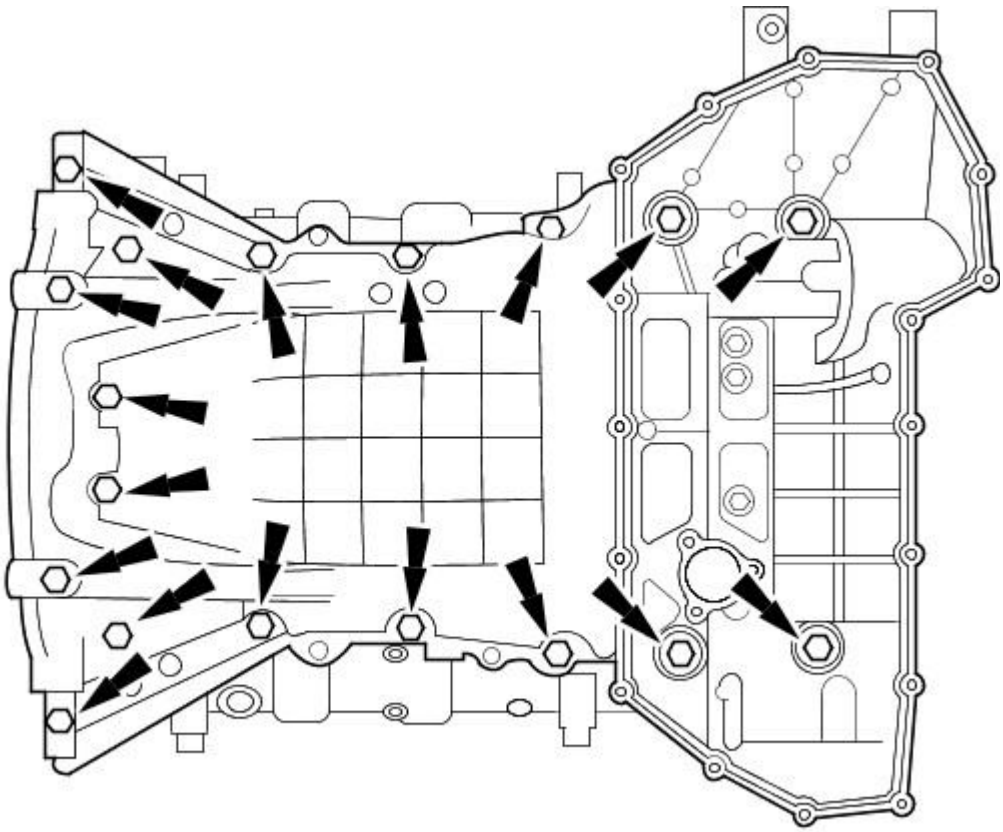


**91.** Remove the oil pump.

- Remove and discard the gasket.

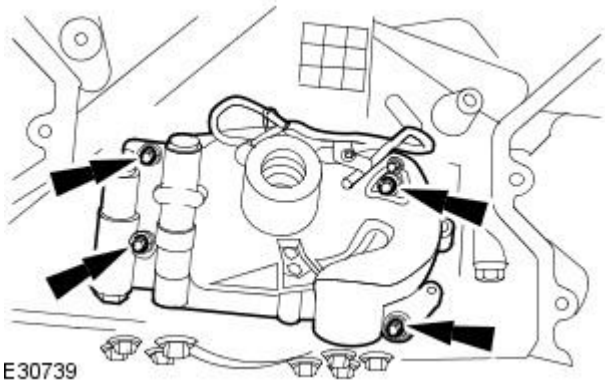


**92.** CAUTION: To make sure damage does not occur to the crankshaft and piston components, the engine must be inverted on the engine stand. Failure to follow this instruction may result in damage to the engine.

• NOTE: If the crankshaft main bearing carrier retaining bolts have been marked with a center punch dot, they must be discarded and new bolts installed.

Remove the crankshaft main bearing carrier.

- Remove the crankshaft main bearing carrier retaining bolts in the indicated sequence.

GETtheMANUALS.org

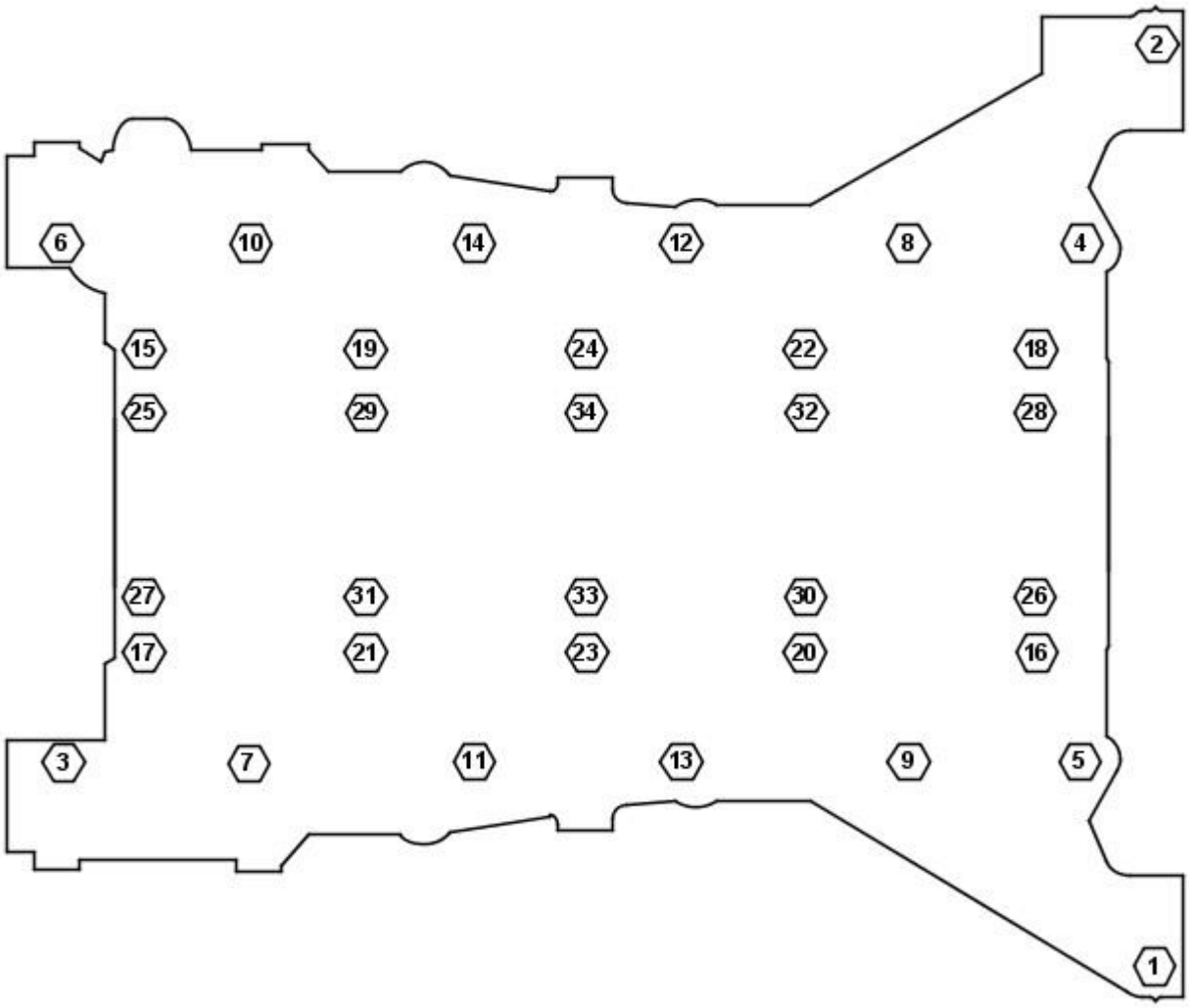


VUJ0002439

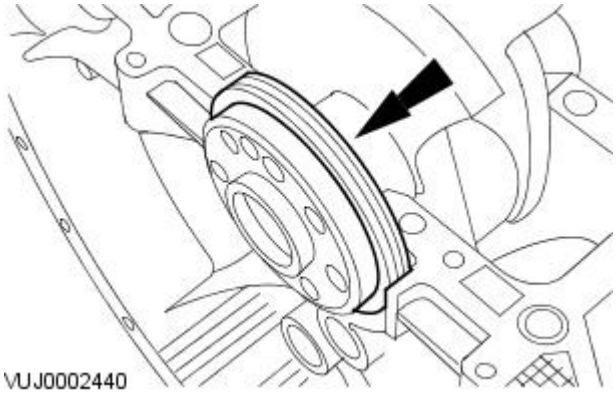

VUJ0002440

**93.** Discard the crankshaft rear main oil seal.

## Installation

All vehicles

**1.** CAUTIONS:

Use only a plastic scraper when removing the sealing material.

If any new bolts are to be installed to retain the crankshaft main bearing carrier, pre-stress the retaining bolts by installing the crankshaft main bearing carrier without any sealant and tightening the new retaining bolts to the specified torque. Remove the crankshaft main bearing carrier once the bolts have been pre-stressed. Failure to follow this instruction may result in damage to the vehicle.

GETtheMANUAL.org

Clean all the mating faces and reusable parts thoroughly and check for damage.

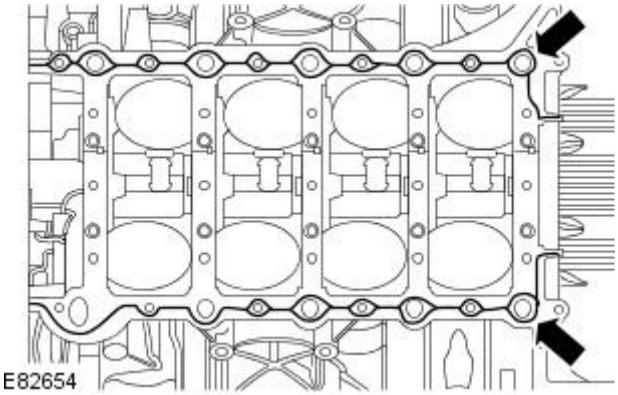


**2.** NOTE: Install the crankshaft main bearing carrier and tighten bolts to specification within twenty minutes of applying the sealant.

Apply a 2 mm (0.08in) bead of sealant to the cylinder block in the area shown.

- Use WSS-M4G323-A4-RTV sealant.

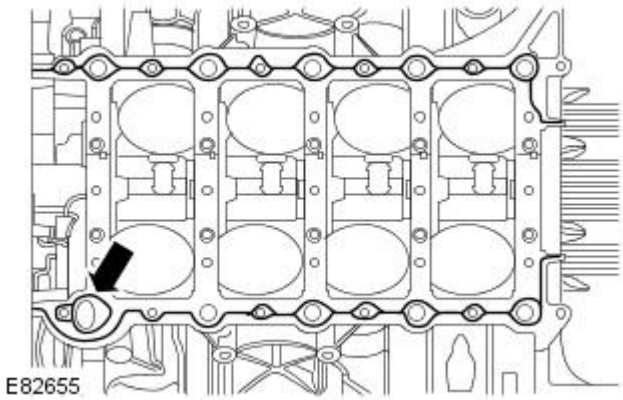


**3.** NOTE: Install the crankshaft main bearing carrier and tighten bolts to specification within twenty minutes of applying the sealant.

Apply a 1 mm (0.039in) bead of sealant to the cylinder block in the area shown.

- Use WSS-M4G323-A4-RTV sealant.

**4.** CAUTION: Make sure all dowels are fully seated into the crankshaft main bearing carrier prior to tightening the bolts.

• NOTE: Do not lubricate the crankshaft main bearing carrier retaining bolts.

• NOTE: Do not rotate the crankshaft until all the retaining bolts are tightened to specification.

• NOTE: The retaining bolts must be tightened within twenty minutes of applying the sealant.

• NOTE: Tighten the retaining bolts in the sequence shown.

Install the crankshaft main bearing carrier to the cylinder block.

- Stage 1: Bolts 21 to 32, tighten to 15 Nm.
- Stage 2: Bolts 33 to 34, tighten to 15 Nm.
- Stage 3: Bolts 1 to 10, tighten to 25 Nm.
- Stage 4: Bolts 11 to 20, tighten to 15 Nm.
- Stage 5: Bolts 1 to 10, tighten to 35 Nm + 135 degrees.
- Stage 6: Bolts 11 to 20, tighten to 20 Nm + 150 degrees.
- Stage 7: Bolts 21 to 32, tighten to 20 Nm + 90 degrees.
- Stage 8: Bolts 33 to 34, tighten to 20 Nm + 150 degrees.
- Stage 9: Center punch each of the bolt heads to indicate it has been reused.

GETtheMANUALS.org

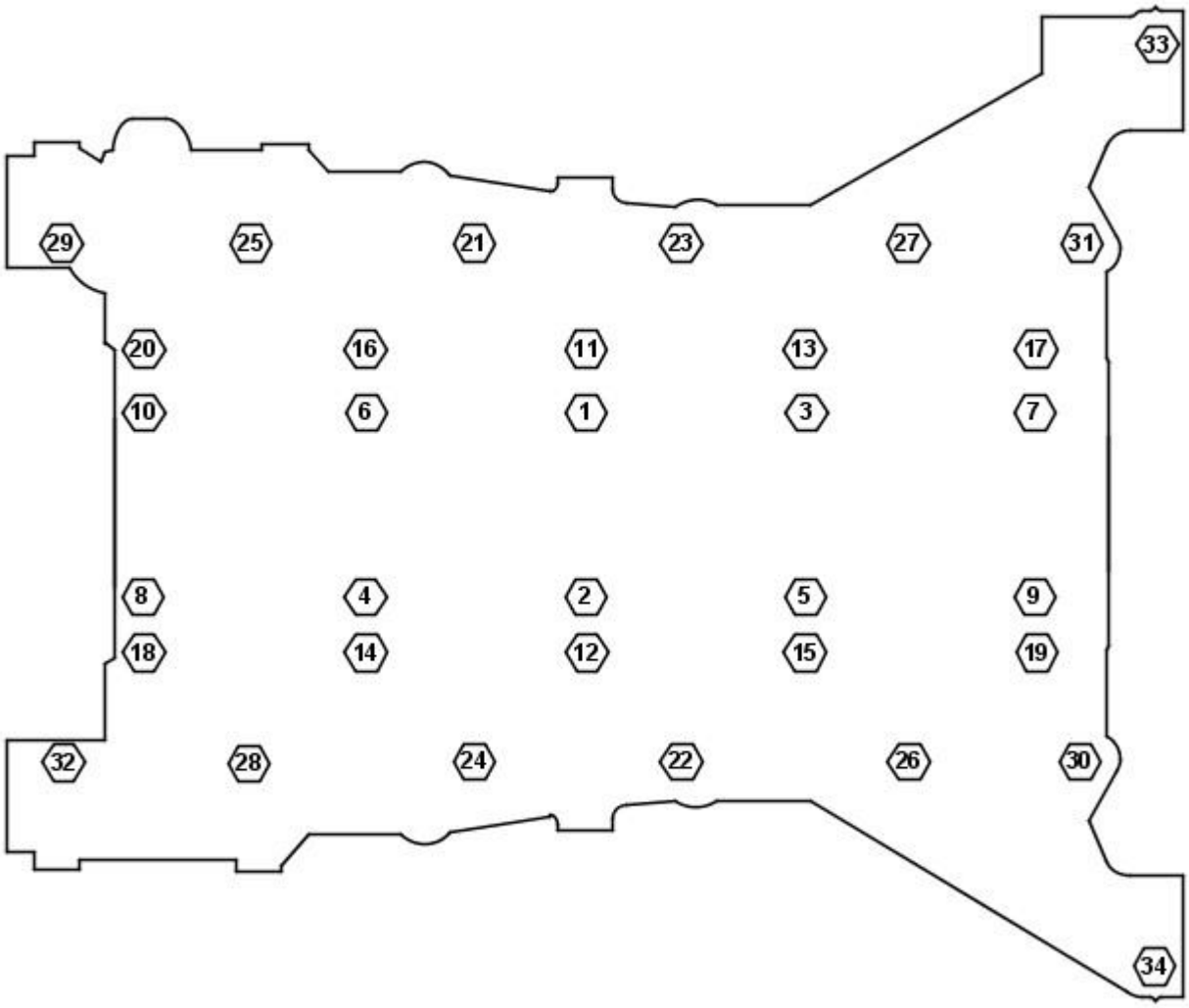


VUJ0002450

**5.** Remove the special tool.

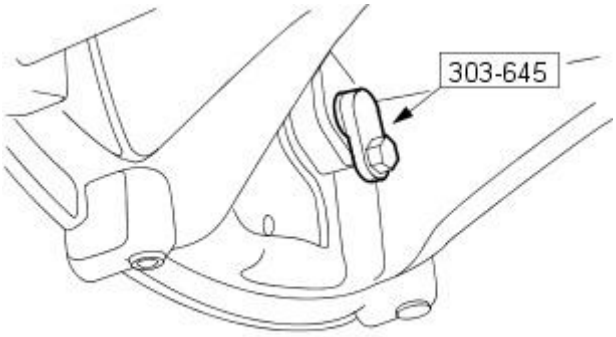


VUJ0002400

**6.** Remove the special tool from the left-hand cylinder head.

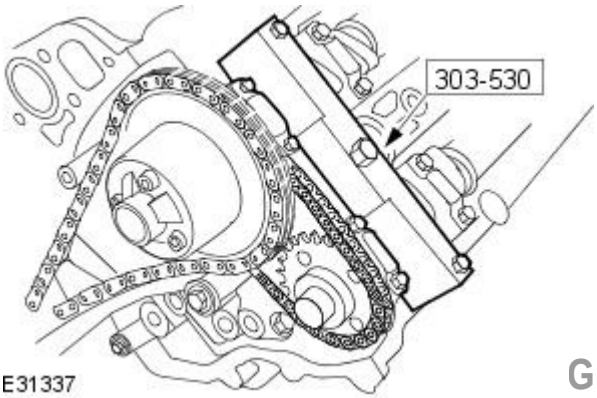


E31337

GETtheMANUALS.org

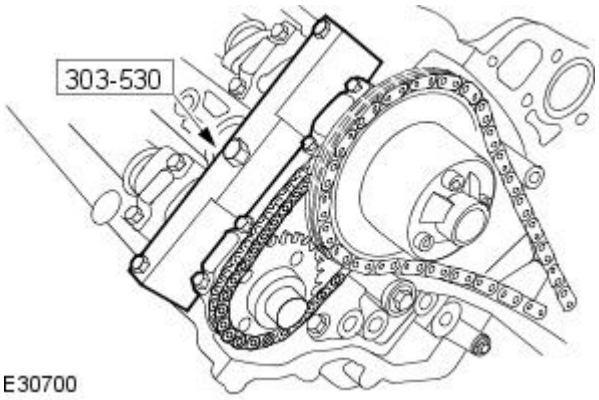


**7.** Remove the special tool from the right-hand cylinder head.

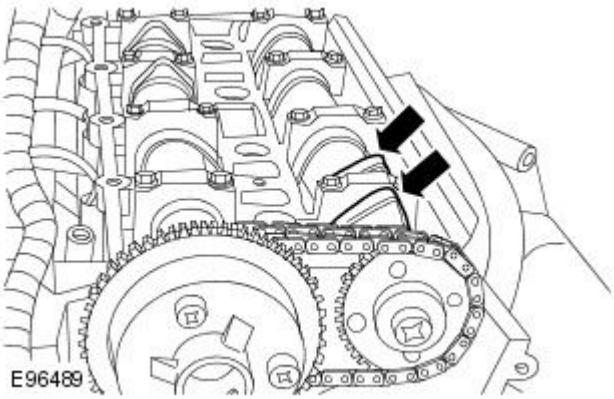


**8.** CAUTION: Make sure that number 1 cylinder intake camshaft lobes are vertical to the cylinder head face.

Position the right-hand camshafts to the neutral position.

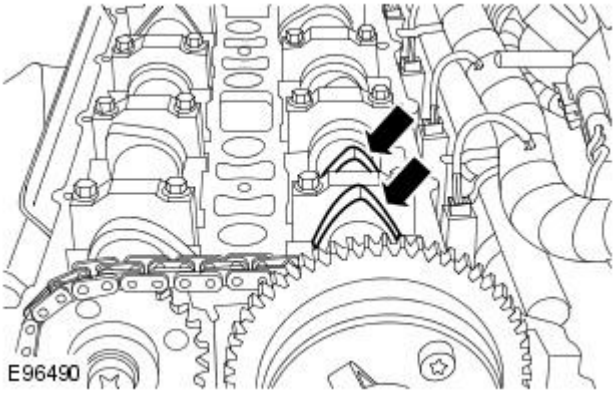


**9.** CAUTION: Make sure that number 2 cylinder exhaust camshaft lobes are vertical to the cylinder head face.

Position the left-hand camshafts to the neutral position.

**10.** CAUTIONS:

Make sure no binding of the crankshaft occurs.

Make sure the spark plugs are removed to enable the engine to rotate freely.

Carefully rotate the crankshaft two complete turns to check for correct operation.

**11.** CAUTIONS:

Make sure the spark plugs are removed to enable the engine to rotate freely.

Do not rotate the crankshaft counterclockwise.

Rotate the crankshaft clockwise to position the engine to top dead center (TDC) No. 1 cylinder

Install the special tool.

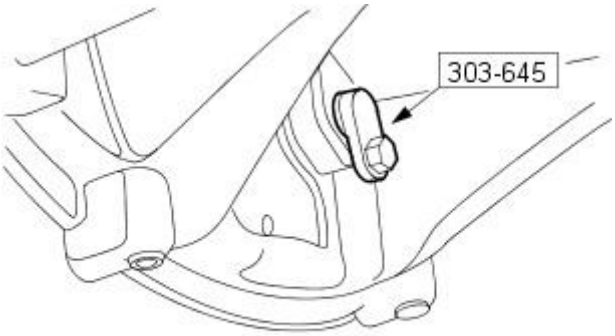


GETtheMANUALS.org

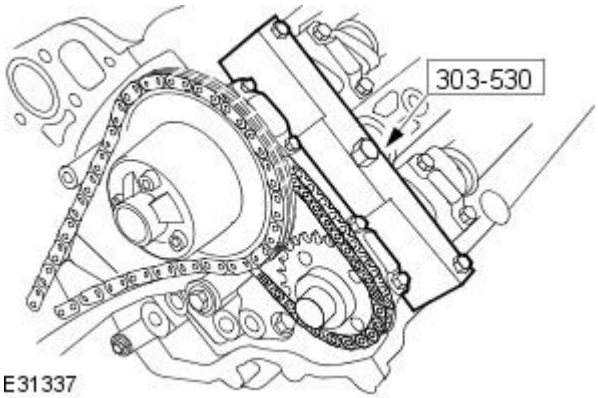

E31337

**12.** Install the special tool to the left-hand cylinder head.

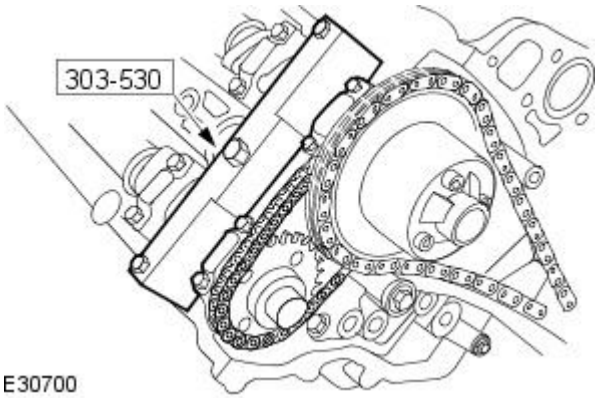

E30700

**13.** Install the special tool to the right-hand cylinder head.

**14.** Remove excess sealant which may squeeze out at the front cover sealing surfaces.

**15.** NOTE: Make sure the transit sleeve is correctly positioned.

Align the rear crankshaft oil seal, to the crankshaft.

- Carefully remove the transit sleeve, leaving the seal in place.

**16.** Install the special tool to the crankshaft.

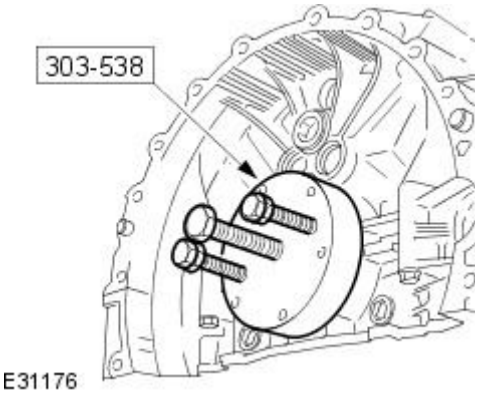

E31176

**17.** Reposition the nuts to hold the special tool against the crankshaft rear seal. Check that the crankshaft rear seal and the special tool are parallel to the rear of the engine.

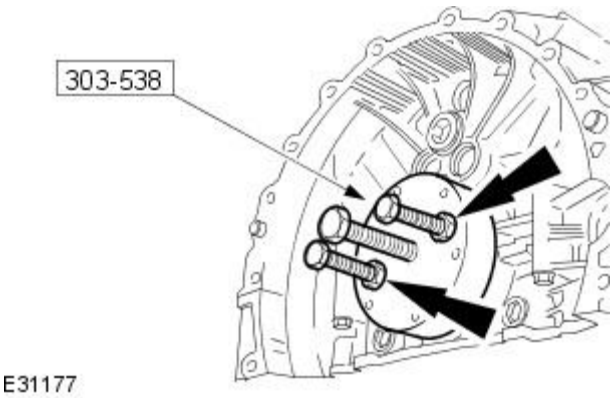

E31177

GETtheMANUALS.org

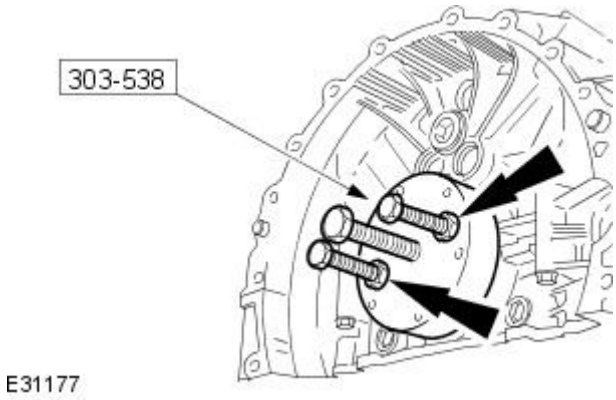


**18.** NOTE: Alternate nut tightening to correctly seat the crankshaft rear seal.

Using the special tool, install the crankshaft rear seal.

**19.** Remove the special tool from the crankshaft.

- Check that the seal is located correctly.

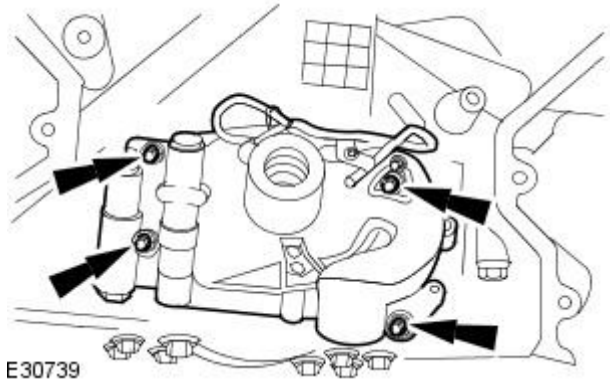


**20.** NOTE: Install a new gasket.

Install the oil pump.

- Tighten to 12 Nm.

**21.** NOTE: It is important that the oil pan extension is bolted to the crankshaft main bearing carrier within twenty minutes of applying the sealant.

Apply a continuous 3mm bead of sealant around the crankshaft main bearing carrier flange OR around the oil pan body flange as shown.

- Use WSS-M4G323-A4-RTV sealant.

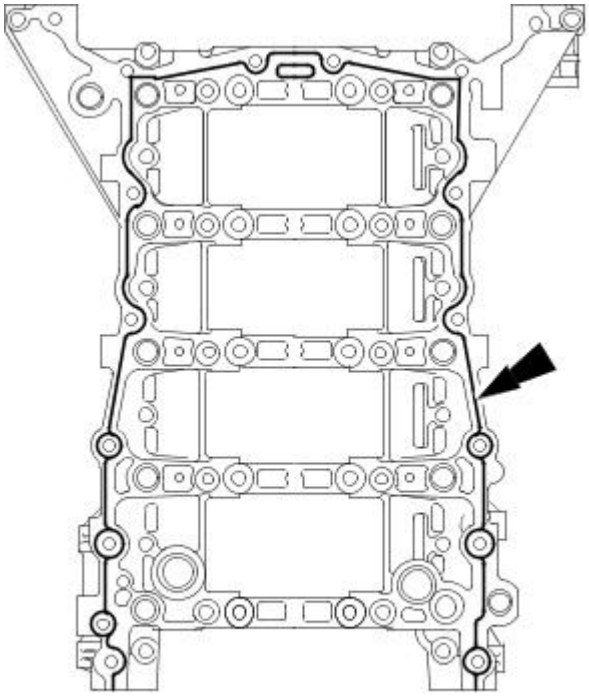


**22.** NOTE: It is important that the oil pan extension is bolted to the crankshaft main bearing carrier within twenty minutes of applying the sealant.

Apply a continuous 2mm bead of sealant, around the diverter valve flange as shown.

- Use WSS-M4G323-A4-RTV sealant.

GETtheMANUALS.org

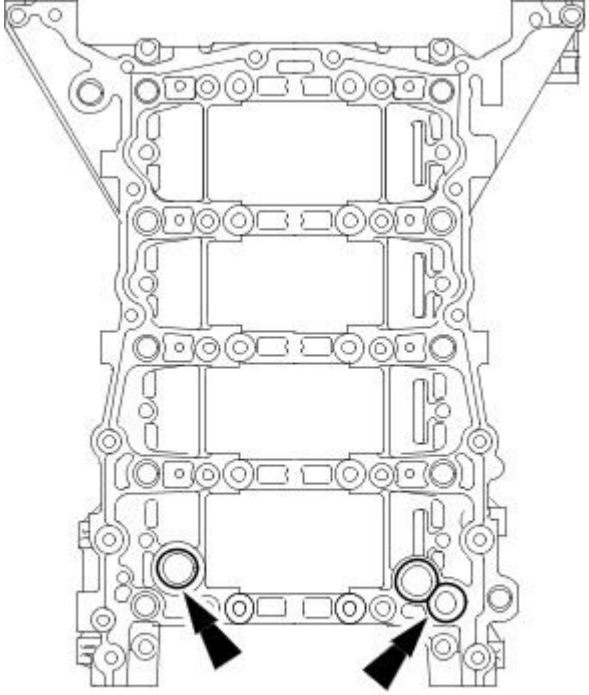

E32648

**23.** NOTE: Tighten the retaining bolts in the sequence shown.

Install the upper oil pan.

- Tighten to 21 Nm.

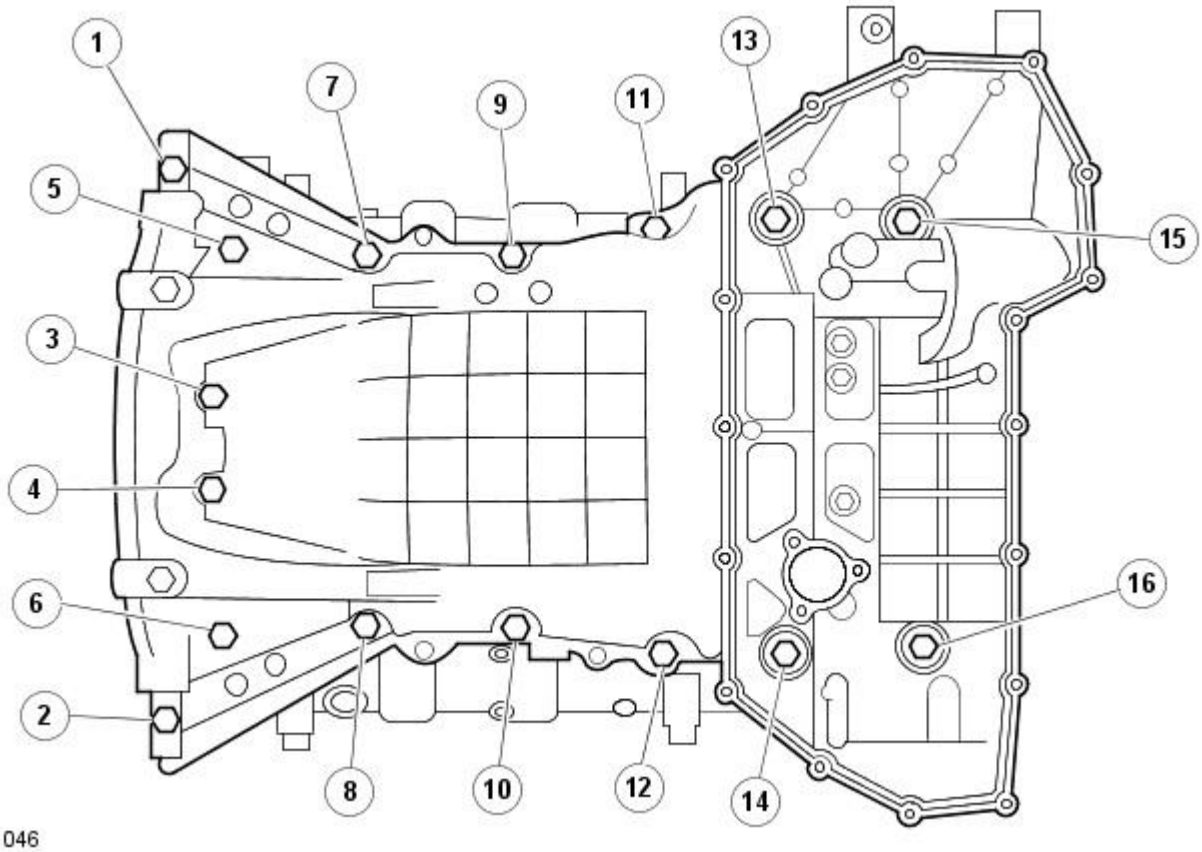


E81046

GETtheMANUALS.org

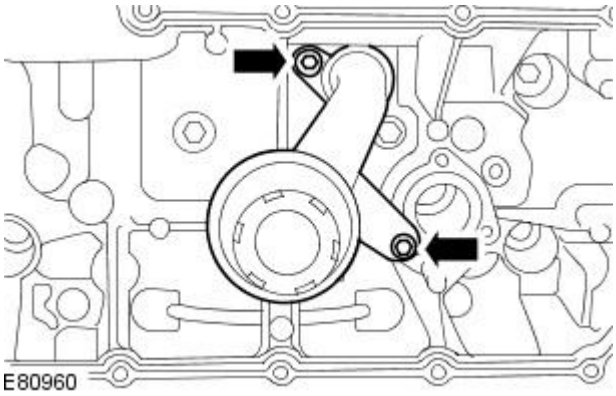


**24.** NOTE: Install a new O-ring seal.

Install the oil strainer.

- Tighten to 12 Nm.

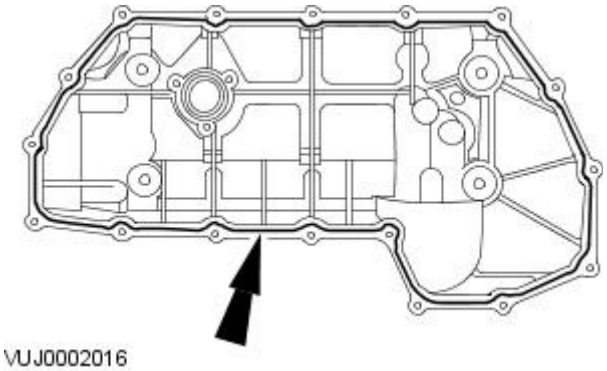


**25.** Install the oil pan gasket to the oil pan body assembly.

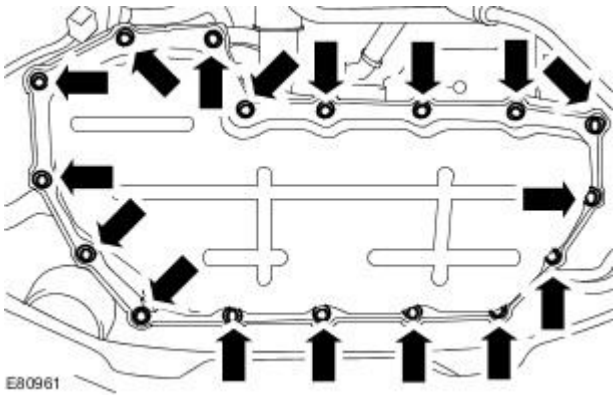


**26.** Install the lower oil pan.

- Install, but do not fully tighten the retaining bolts.

**27.** Tighten the retaining bolts in the indicated sequence in two stages.

- Stage 1: bolts 1 to 7, tighten to 5 Nm.
- Stage 2: bolts 1 to 17, tighten to 12 Nm.

GETtheMANUALS.org

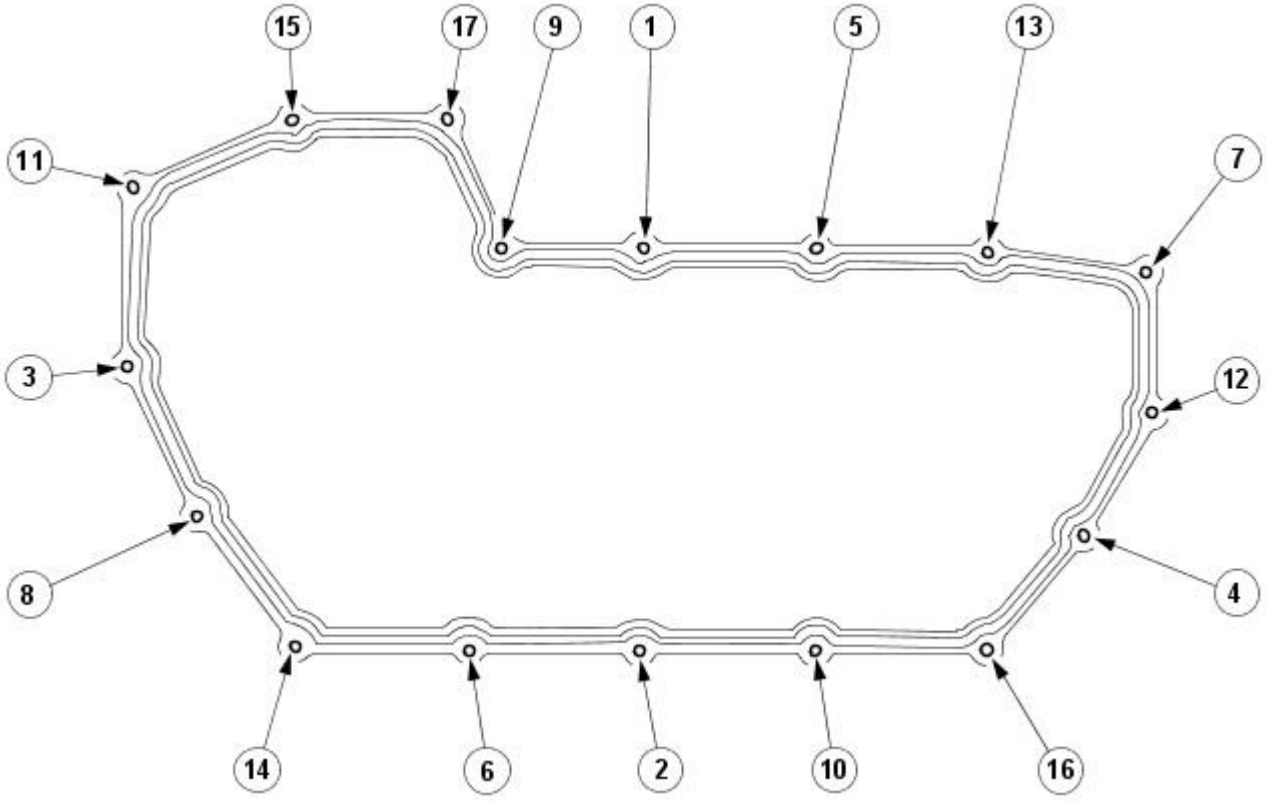

E36705

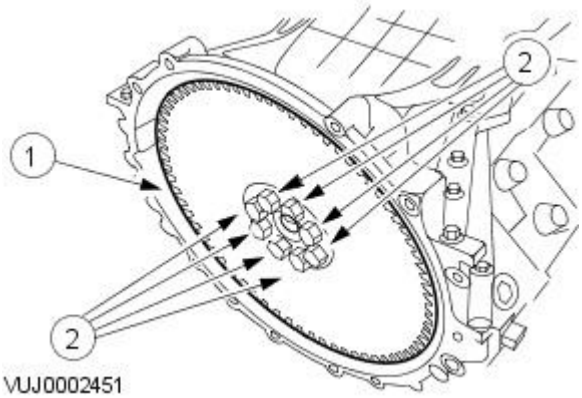

VUJ0002451

**28.** Install the drive plate.

- Install the drive plate retaining bolts, and tighten in 2 stages.
- Stage 1: Tighten to 15 Nm.
- Stage 2: Tighten to 110 Nm.

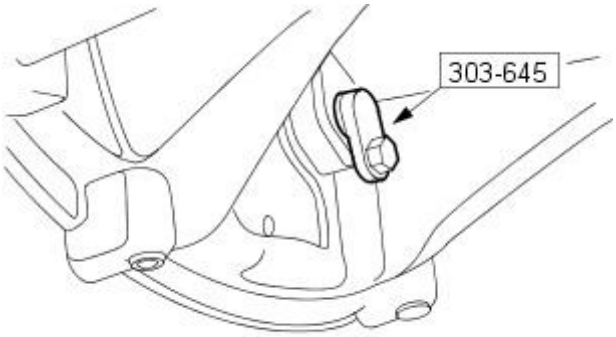

VUJ0002400

**29.** Position the crankshaft.

- Install the special tool.

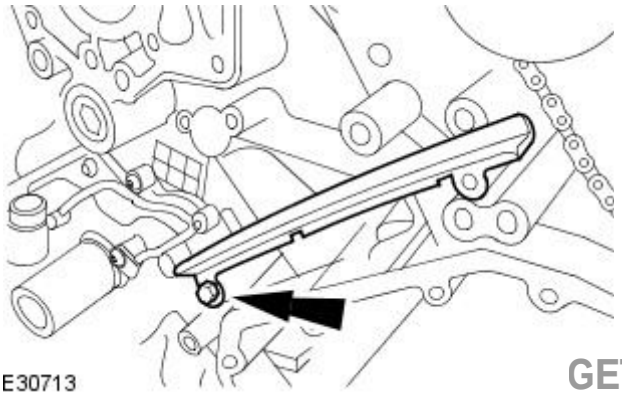
E30713

**30.** Install the left-hand primary timing chain tensioner guide.

- Tighten to 12 Nm.

GETtheMANUALS.org

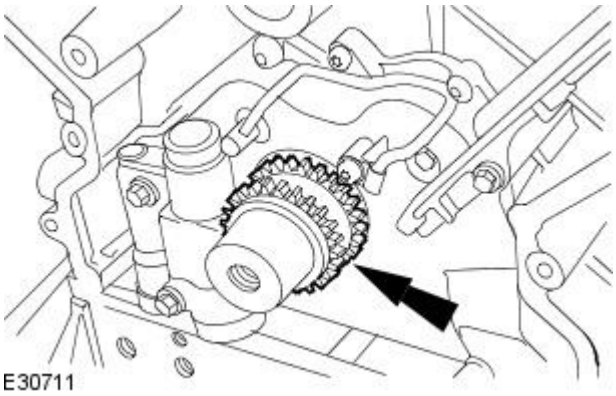
E30711

**31.** Install the crankshaft sprocket.

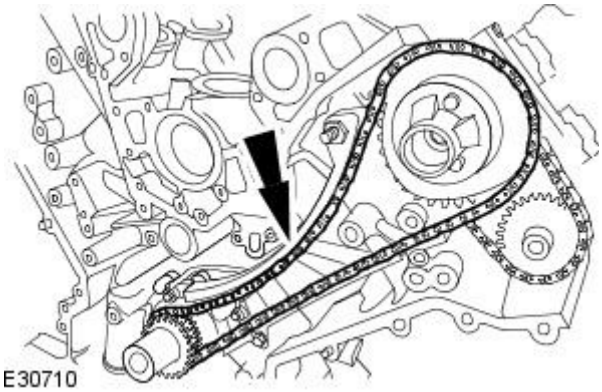
E30710

**32.** CAUTION: Make sure the timing chain slack is on the tensioned side of the timing chain.

Install the left-hand primary timing chain.

- Install the primary chain over the crankshaft sprocket and the intake sprocket.

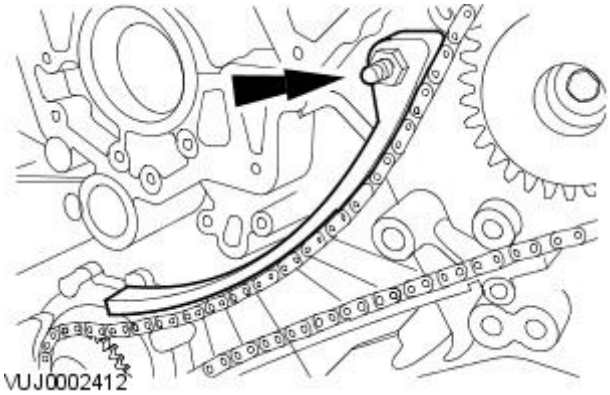
VUJ0002412

**33.** Install the left-hand primary timing chain tensioner guide.

- Tighten to 12 Nm.

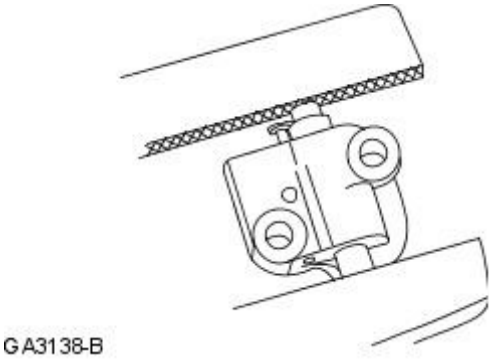
GA3138-B

**34.** CAUTION: Use suitable protective covers on the vice jaws to protect the timing chain tensioner.

Secure the left-hand timing chain tensioner in the vice jaws.

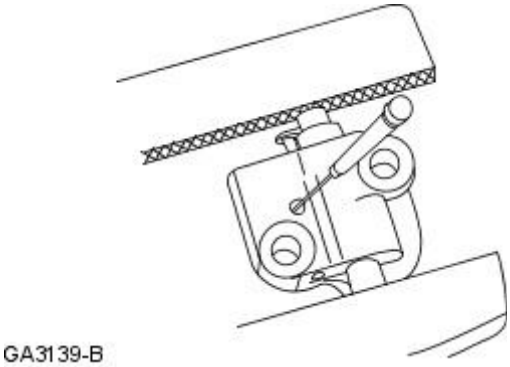
GA3139-B

**35.** CAUTION: During timing chain tensioner compression, do not release the ratchet stem until the timing chain tensioner piston is fully bottomed in its bore or damage to the ratchet stem will result.

Using a suitable tool, hold the left-hand timing chain tensioner ratchet lock mechanism away from the ratchet stem.

GETtheMANUALS.org

**36.** NOTE: The timing chain tensioner piston should retract with minimal force. If binding occurs, reposition the timing chain tensioner to eliminate

side loading.

Slowly compress the left-hand timing chain tensioner.

**37.** NOTE: The retaining tool must remain in the timing chain tensioner until the timing chain tensioner is installed to the engine with the piston bottomed in the bore.

Using a suitable tool, retain the left-hand timing chain tensioner piston.

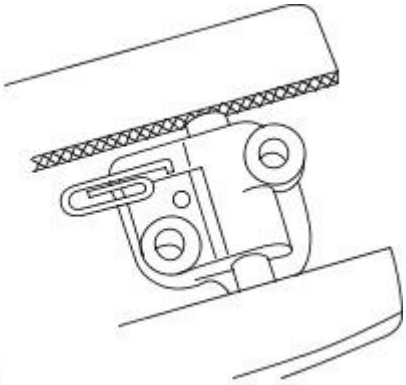

GA3140-A

**38.** Install the left-hand primary timing chain tensioner assembly.

- Tighten to 12 Nm.

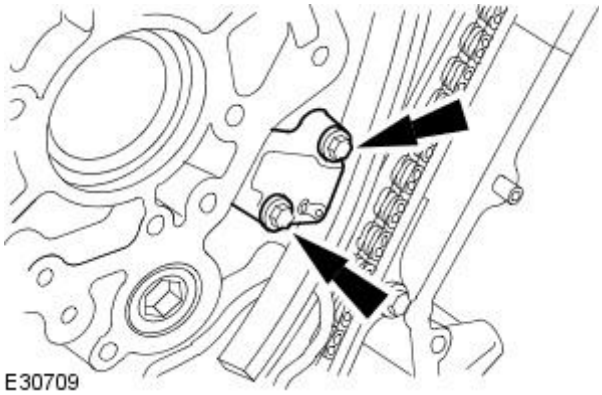

E30709

**39.** Release the tension in the left-hand timing chain tensioner.

- Remove the retaining tool.

**40.** CAUTION: While applying the opposing force to sprocket and chain, tighten the sprocket bolt.

Using the special tool apply force to the tool in an anti-clockwise direction to tension the primary timing chain on its drive side.

- Tighten to 120 Nm.

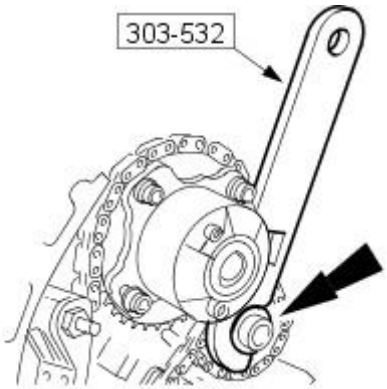


E31269

**41.** CAUTION: While applying the opposing force to sprocket and chain, tighten the sprocket bolt.

Using the special tool apply force to the tool in an anti-clockwise direction.

- Tighten to 120 Nm.

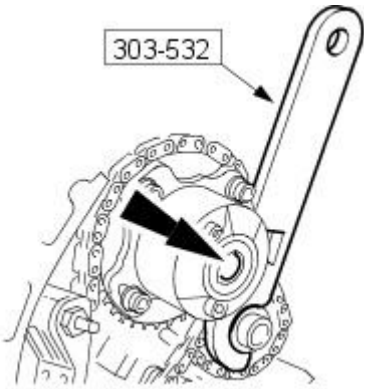


E31270

GETtheMANUALS.org

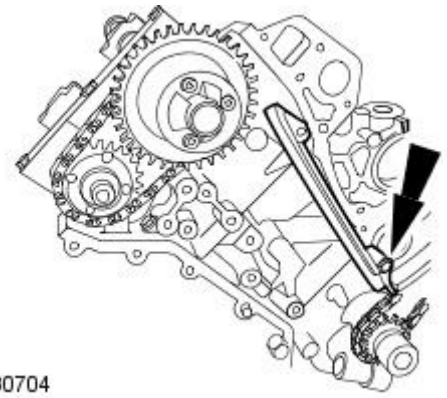

E30704

**42.** Install the right-hand primary timing chain guide.

- Tighten to 12 Nm.

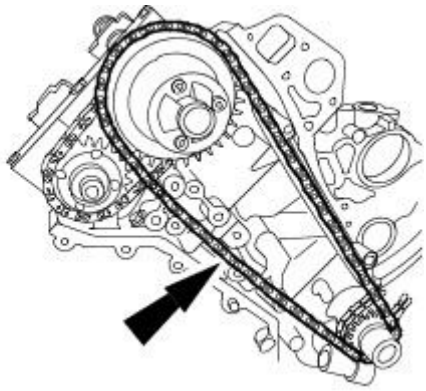

E30703

**43.** CAUTION: Make sure the timing chain slack is on the tensioned side of the timing chain.

Install the right-hand primary timing chain.

- Install the primary chain over the crankshaft sprocket and the intake sprocket.

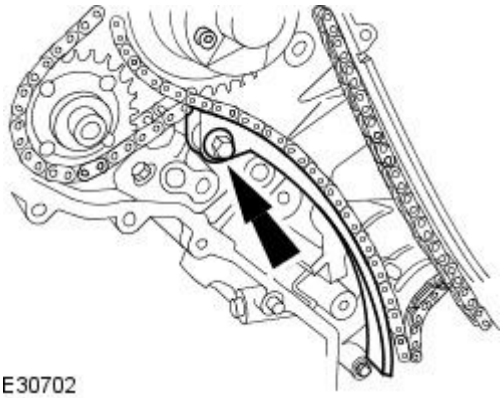

E30702

**44.** Install the right-hand primary timing chain tensioner guide.

- Tighten to 12 Nm.

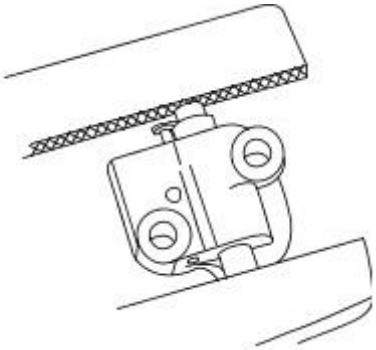

GA3138-B

**45.** CAUTION: Use suitable protective covers on the vice jaws to protect the timing chain tensioner.

Secure the right-hand timing chain tensioner in the vice jaws.

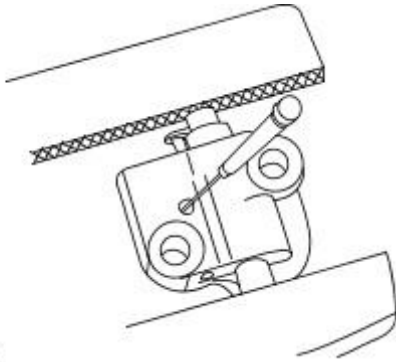

GA3139-B

**46.** CAUTION: During timing chain tensioner compression, do not release the ratchet stem until the timing chain tensioner piston is fully bottomed in its bore or damage to the ratchet stem will result.

Using a suitable tool, hold the right-hand timing chain tensioner ratchet lock mechanism away from the ratchet stem.

GETtheMANUALS.org

**47.** NOTE: The timing chain tensioner piston should retract with minimal force. If binding occurs, reposition the timing chain tensioner to eliminate

side loading.

Slowly compress the right-hand timing chain tensioner.

**48.** NOTE: The retaining tool must remain in the timing chain tensioner until the timing chain tensioner is installed to the engine with the piston bottomed in the bore.

Using a suitable tool, retain the right-hand timing chain tensioner piston.

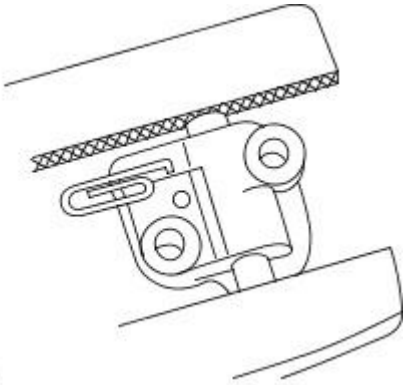

GA3140-A

**49.** Install the right-hand primary timing chain tensioner assembly.

- Tighten to 12 Nm.

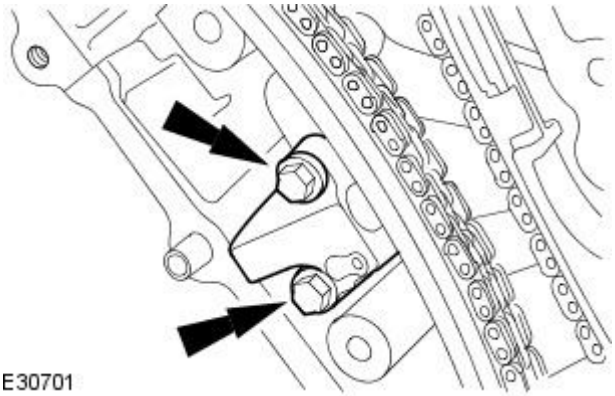

E30701

**50.** Release the tension in the right-hand timing chain tensioner.

- Remove the retaining tool.

**51.** CAUTION: While applying the opposing force to sprocket and chain, tighten the sprocket bolt.

Using the special tool apply force to the tool in an anti-clockwise direction to tension the primary timing chain on its drive side.

- Tighten to 120 Nm.

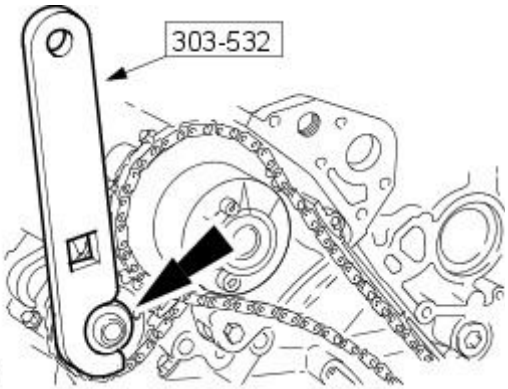


E31271

**52.** CAUTION: While applying the opposing force to sprocket and chain, tighten the sprocket bolt.

Using the special tool apply force to the tool in an anti-clockwise direction.

- Tighten to 120 Nm.

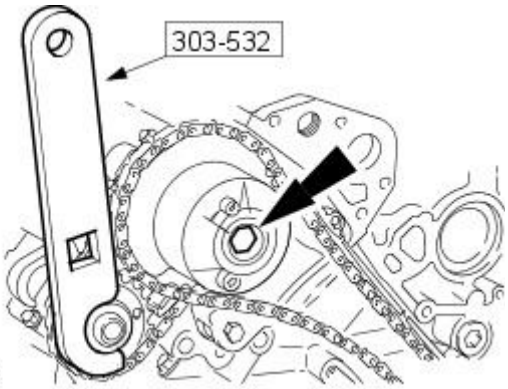


E37392

GETtheMANUALS.org

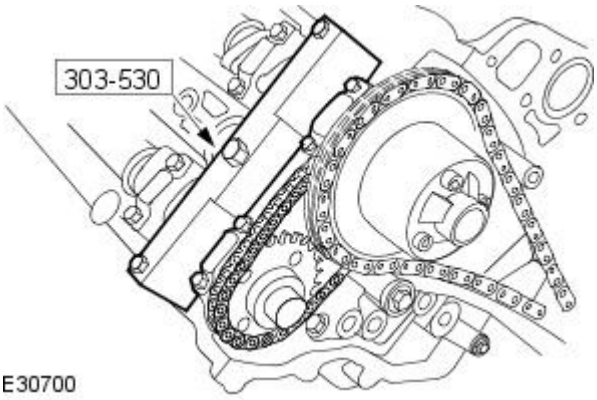


**53.** Remove the special tool from the right-hand cylinder head.

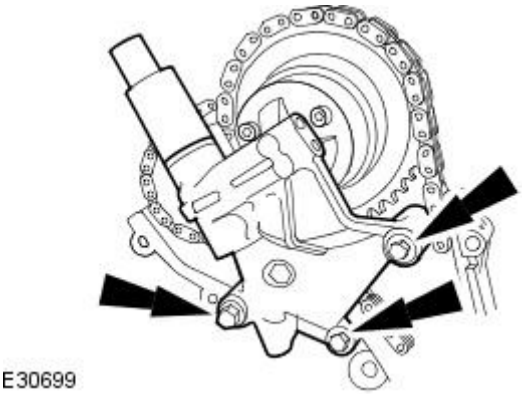


**54.** NOTE: Install new O-ring seals.

Install the right-hand VCT oil control unit housing.

- Tighten to 22 Nm.

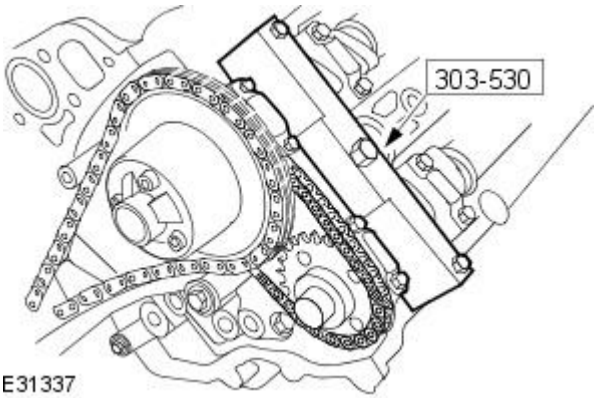


**55.** Remove the special tool from the left-hand cylinder head.

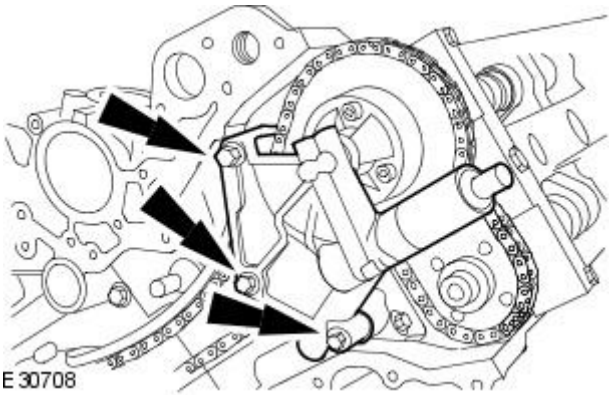


**56.** NOTE: Install new O-ring seals.

Install the left-hand VCT oil control unit housing.

- Tighten to 22 Nm.

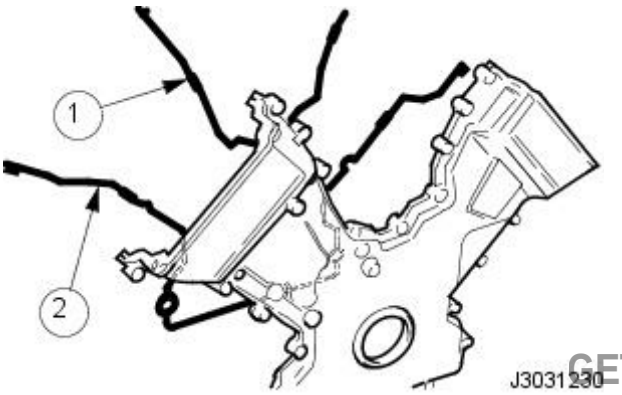


**57.** Install new seals to the timing cover.

- Install the new seal to the inner groove on the face of the timing cover.
- Install the new seal to the outer groove on the face of the timing cover.

GETtheMANUALS.org

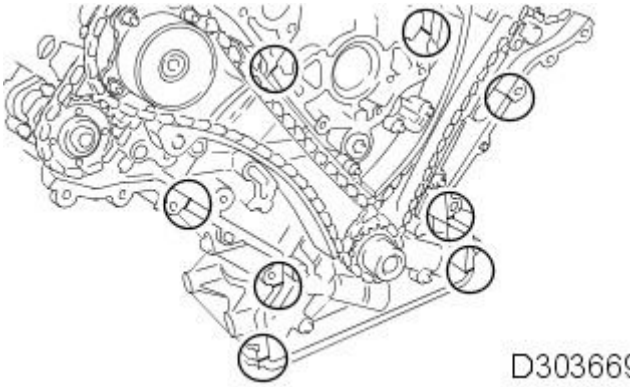


**58.** Apply sealant to the eight joints on the engine face.

- Sealant beads to be 3mm diameter and 12mm long. Cut the nozzle of the sealant tube to produce a 3 mm (0.12 in) bead. (Install and tighten the securing bolts within twenty minutes of sealant application).

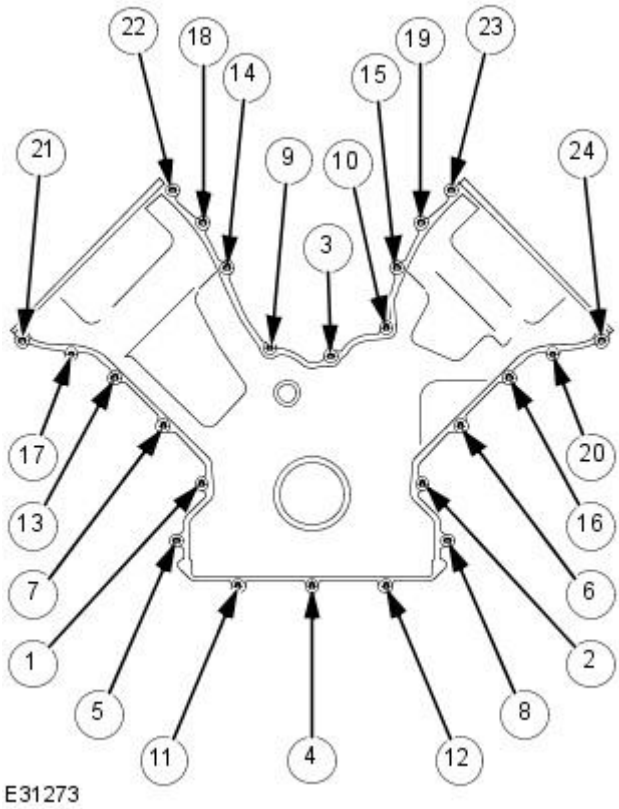


**59.** Install the timing cover.

- Tighten in the sequence shown.

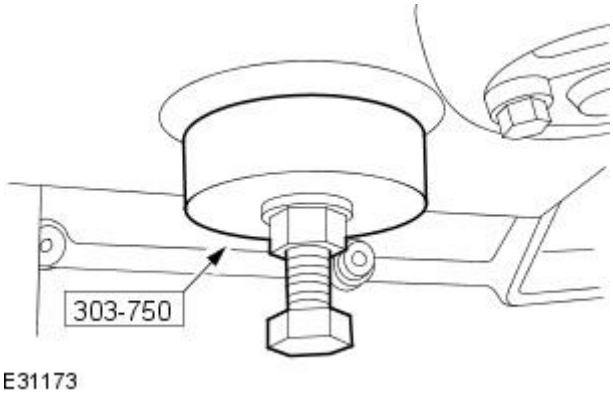


**60.** CAUTIONS:

Make sure the crankshaft front seal mating faces are clean and dry.

Do not remove the crankshaft front seal protector.

Using the special tool, install a new crankshaft front seal.

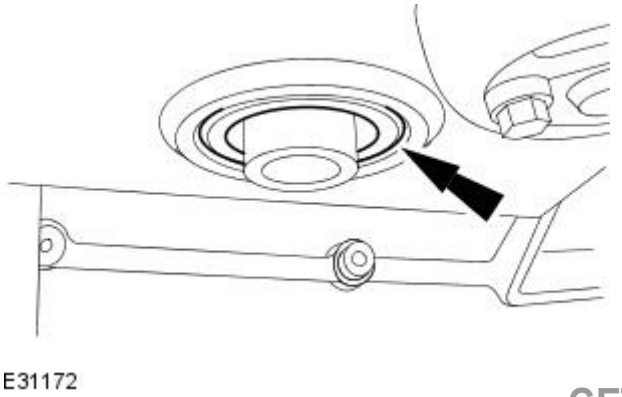


**61.** Remove the crankshaft seal protector.

GETtheMANUALS.org

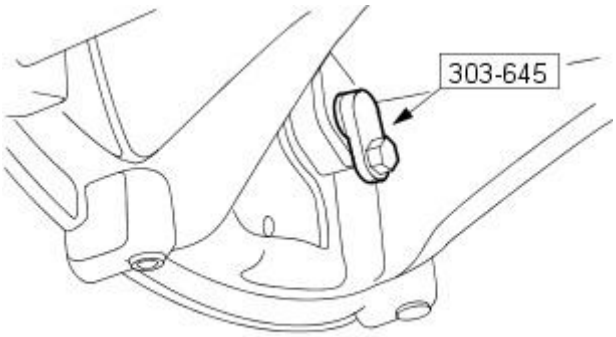


VUJ0002400

**62.** Remove the special tool.

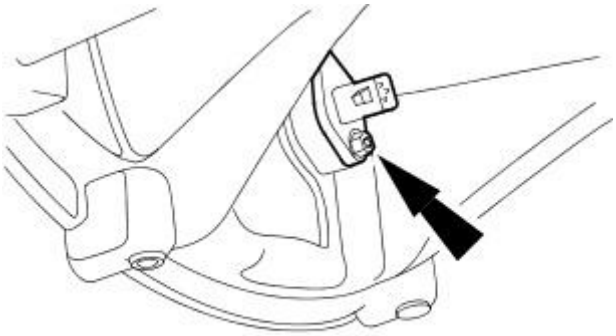

E30694

**63.** Install the CKP sensor.

- Tighten to 12 Nm.

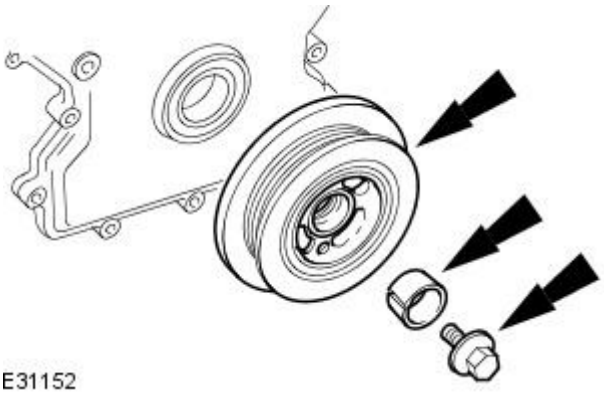

E31152

**64.** Install a new O-ring seal to the crankshaft pulley.

- Lubricate the new O-ring.

**65.** CAUTIONS:

The screw thread in the crankshaft must be cleaned out before a new crankshaft pulley bolt is installed.

A new crankshaft pulley bolt must be used.

Install, but do not tighten, a new crankshaft pulley retaining bolt.

- Install the crankshaft pulley and locking ring to the crankshaft.

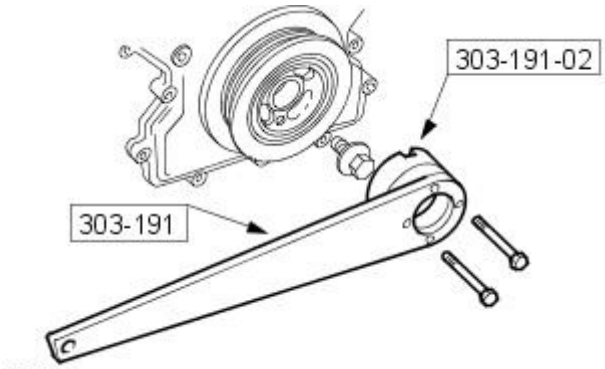


E31149

**66.** CAUTION: Under no circumstances should the crankshaft setting peg 303-645 be used in the following operations to lock the crankshaft.

Using special tools, retain the crankshaft pulley.

- Tighten the crankshaft pulley retaining bolt to 375 Nm.

**67.** Remove the special tools.

GETtheMANUALS.org

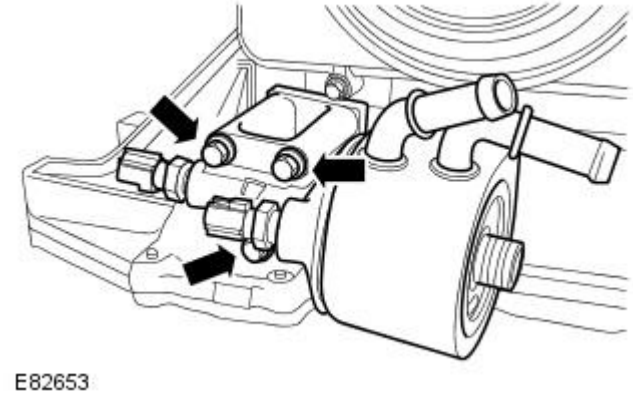
E82653

**68.** NOTE: Install a new gasket.

Install the oil filter housing.

- Tighten to 21 Nm.

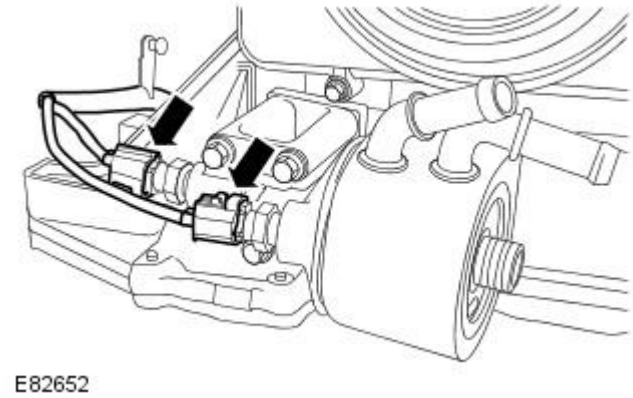
E82652

**69.** Connect the oil pressure switch and oil temperature sensor electrical connectors.

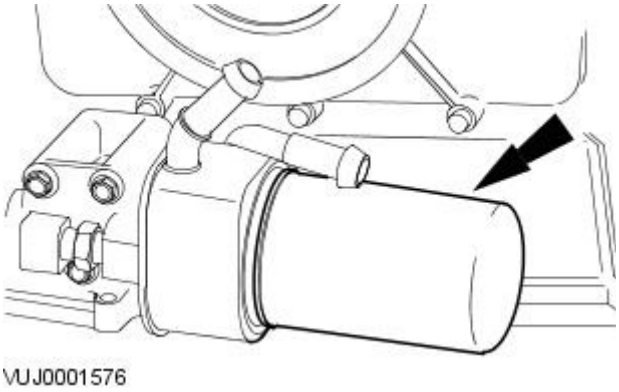
VUJ0001576

**70.** NOTE: Apply a suitable amount of clean engine oil to lubricate the oil filter O-ring seal.

Install a new oil filter.

- Tighten to 18 Nm.

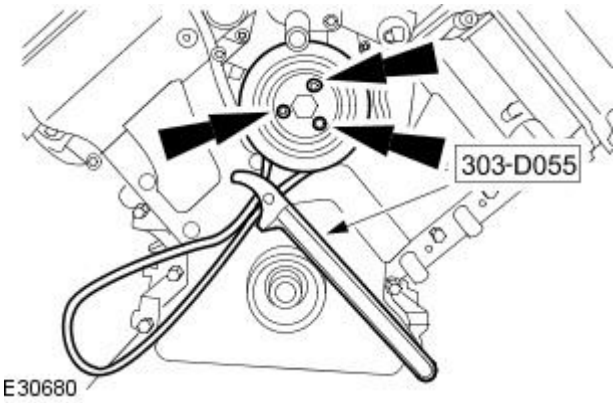

E30680

**71.** Install the water pump pulley.

- Using the special tool, retain the water pump pulley.
- Tighten to 10 Nm + 45°.

GETtheMANUALS.org

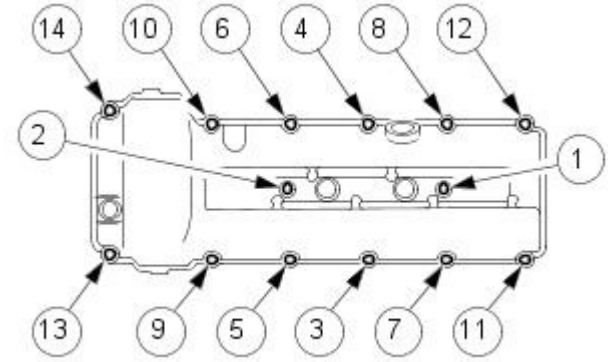

VUJ0001977

**72.** NOTE: Install new valve cover gaskets.

• NOTE: Apply an 8mm diameter bead of silicone gasket sealant on the two places where the cylinder head and front cover join.

Install the left-hand valve cover.

- Tighten in the sequence shown to 10 Nm.

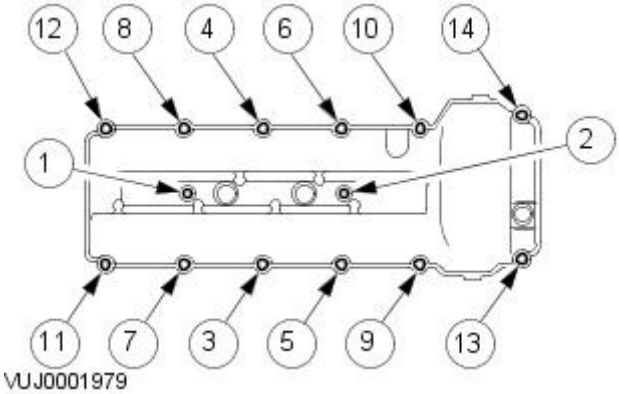

VUJ0001979

**73.** NOTE: Install new valve cover gaskets.

• NOTE: Apply an 8mm diameter bead of silicone gasket sealant on the two places where the cylinder head and front cover join.

Install the left-hand valve cover.

- Tighten in the sequence shown to 10 Nm.

Vehicles without supercharger

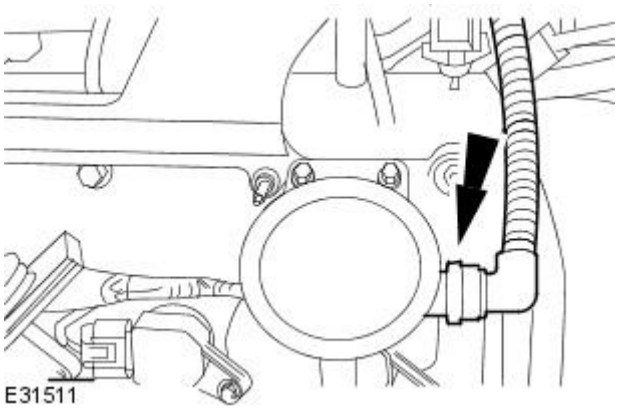
E31511

**74.** Connect the PCV pipe.

All vehicles

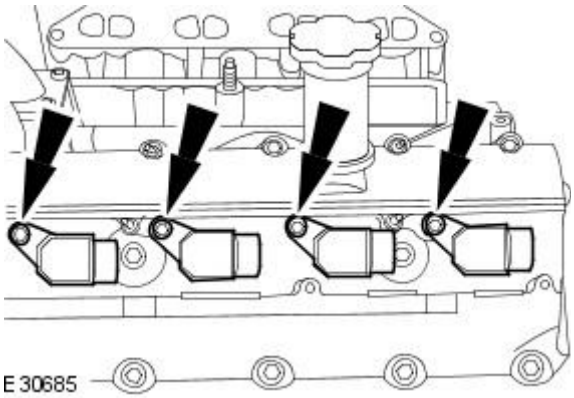
E30685

**75.** NOTE: Left-hand shown, right-hand similar

Install the ignition coils.

- Tighten to 5 Nm.

GETtheMANUALS.org

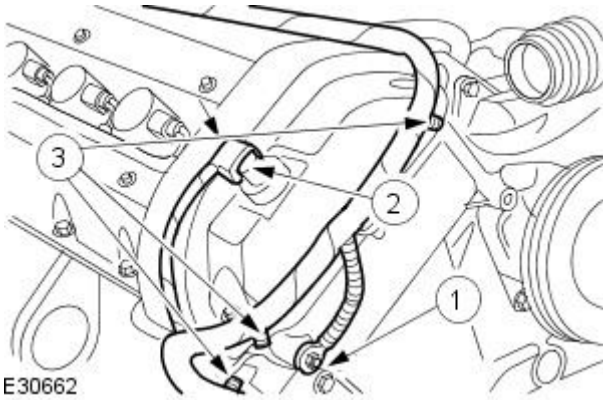


**76.** Attach the engine harness.

- Connect the VCT solenoid electrical connector.
- Attach the engine harness.

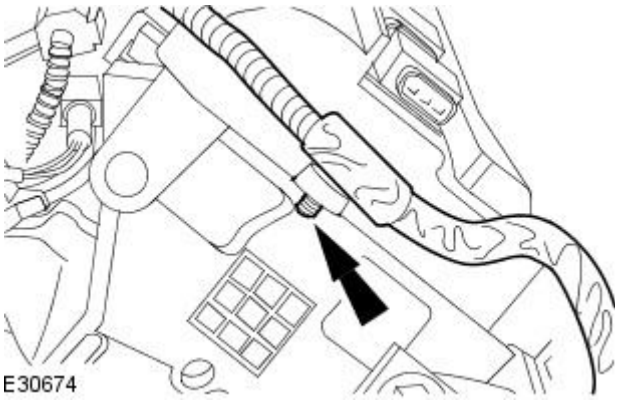


**77.** Attach the right-hand ignition coil wiring harness

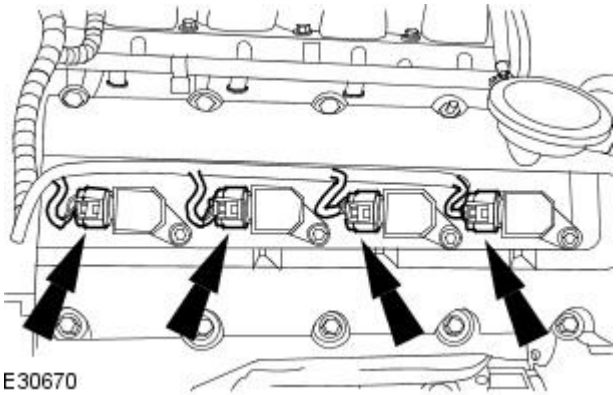


**78.** Connect the right-hand ignition coil electrical connectors.

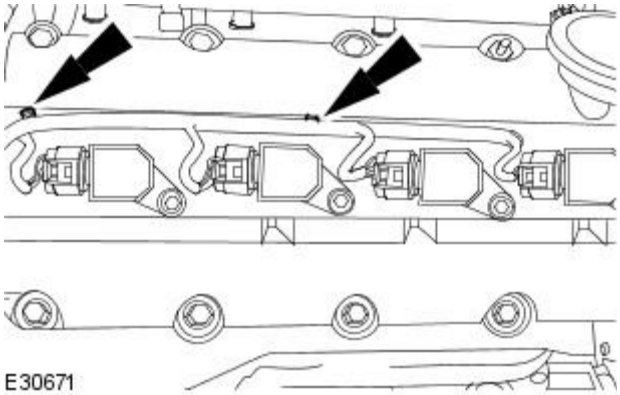


**79.** Attach the right-hand ignition coil wiring harness.

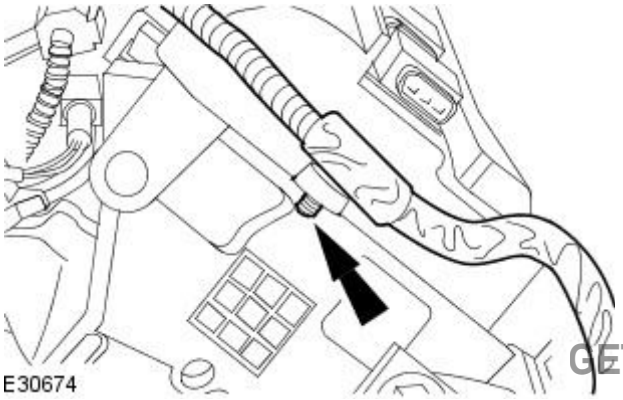


**80.** Attach the left-hand ignition coil wiring harness.

GETtheMANUALS.org

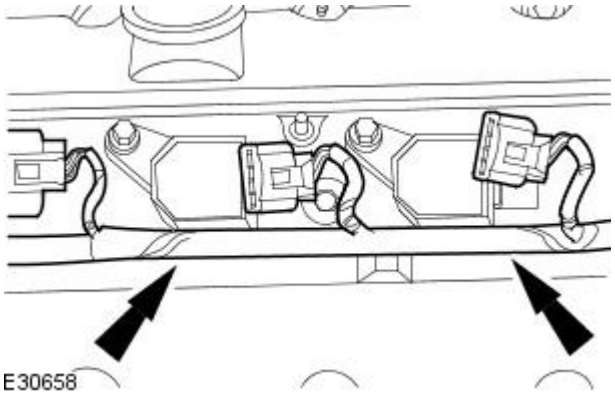


**81.** Attach the left-hand ignition coil wiring harness.

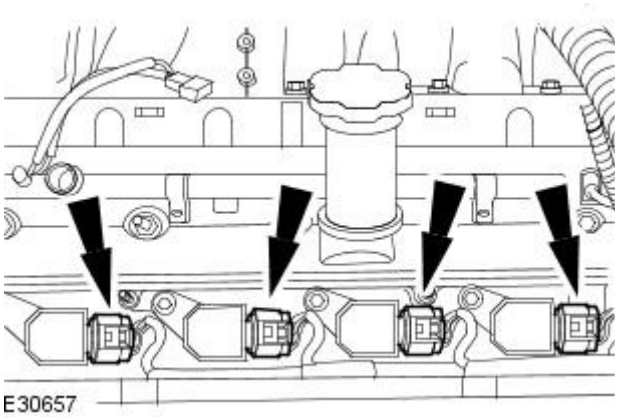


**82.** Connect the left-hand ignition coil electrical connectors.

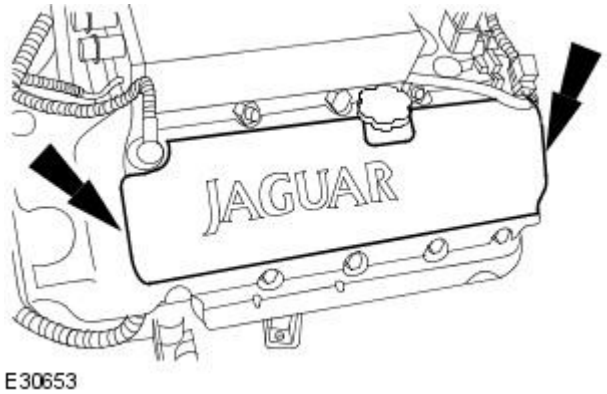


**83.** NOTE: Left-hand shown, right-hand similar.

Install both ignition coil covers.

Vehicles without supercharger

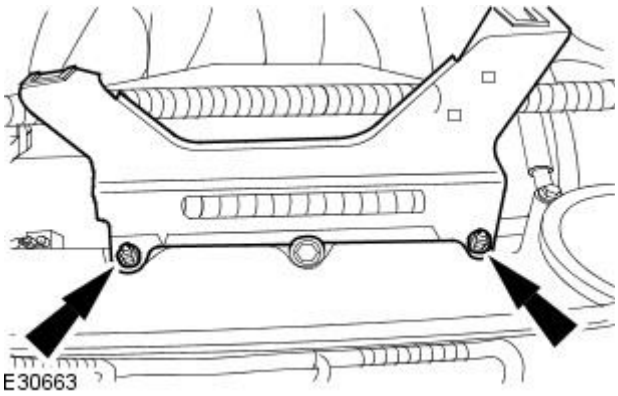


**84.** Install the right-hand engine cover retaining bracket.

GETtheMANUALS.org

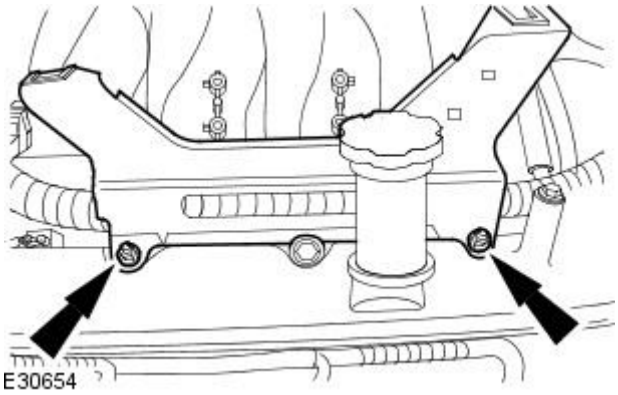


**85.** Install the left-hand engine cover retaining bracket.

Vehicles with supercharger

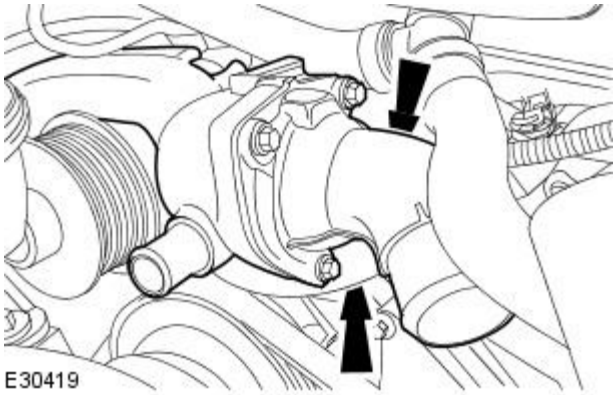


**86.** NOTE: Install new O-ring seals to the thermostat housing.

Install thermostat housing.

- Tighten to 10 Nm.

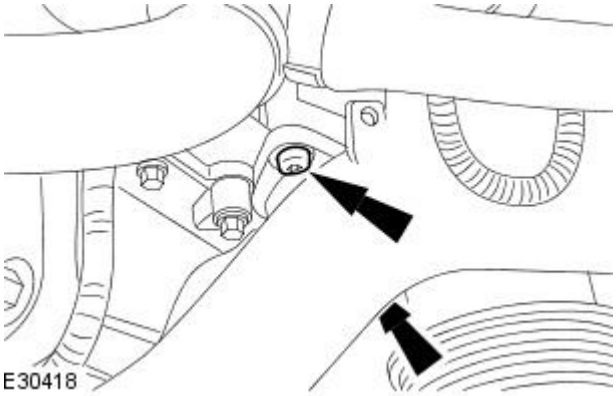


**87.** Tighten to 10 Nm.

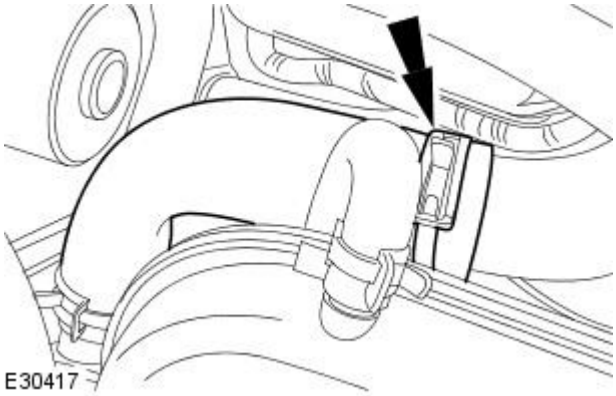


**88.** Connect the water pump outlet to thermostat housing hose.

GETtheMANUALS.org

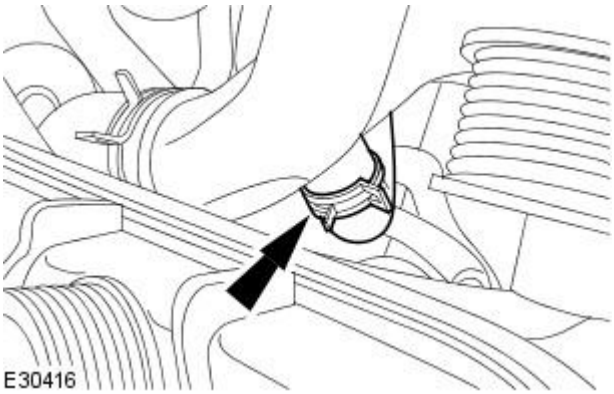


**89.** Connect the heater supply hose to the thermostat housing.

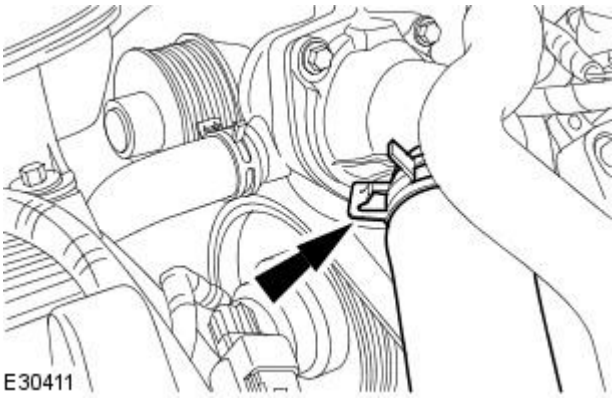


**90.** Connect the thermostat outlet hose.

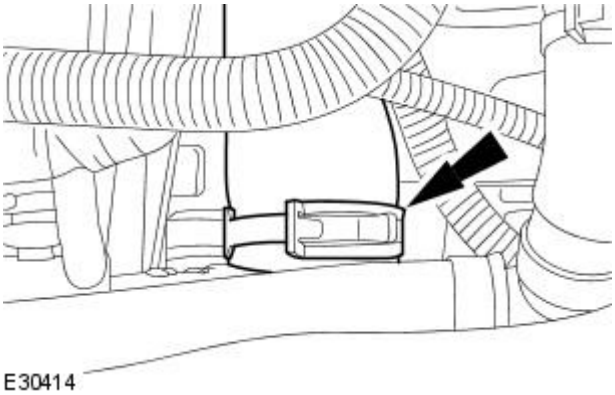


**91.** Reposition the thermostat housing hose retaining clip.

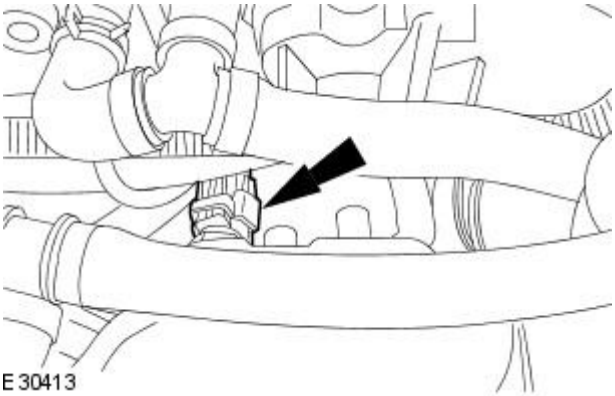


**92.** Connect the ECT sensor electrical connector.

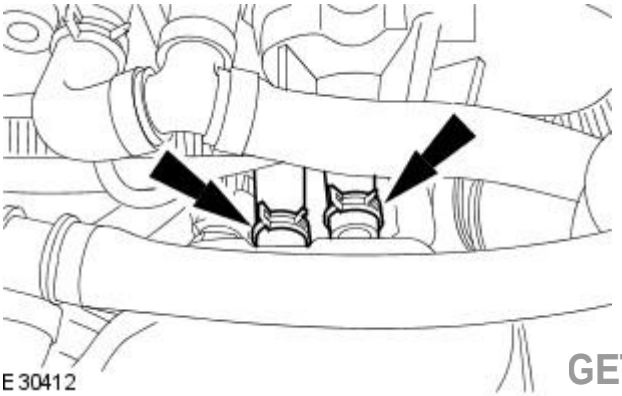


**93.** Connect the thermostat housing hoses

GETtheMANUALS.org

Vehicles without supercharger

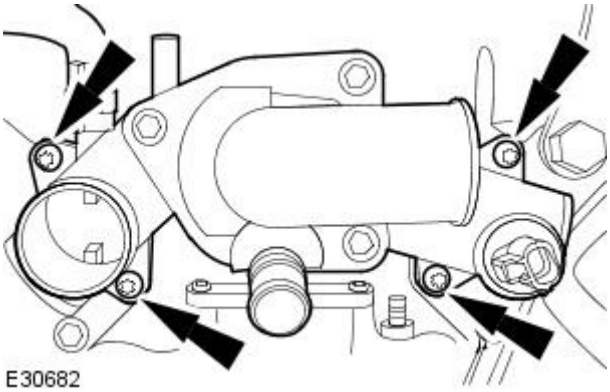


**94.** NOTE: Install new O-ring seals.

Install the thermostat housing.

- Tighten to 10 Nm.

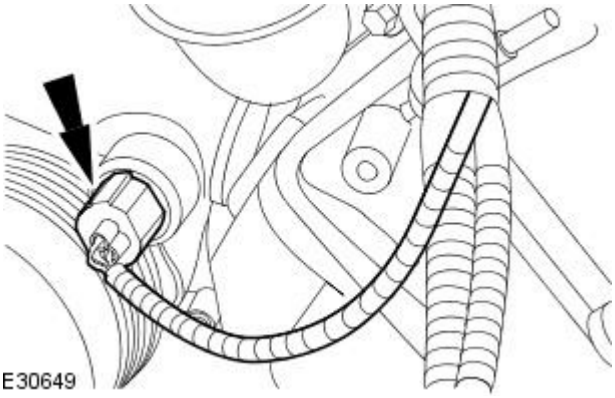


**95.** Connect the ECT sensor electrical connector.

All vehicles

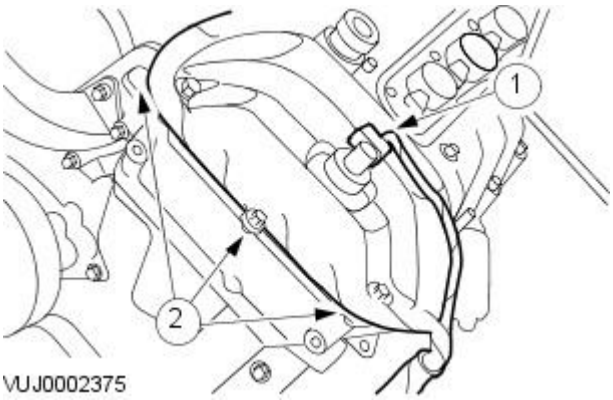


**96.** Attach the engine wiring harness.

- Connect the VCT solenoid electrical connector.
- Attach the engine wiring harness.

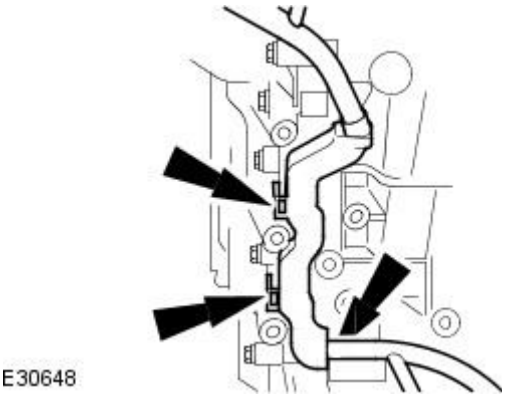


**97.** Attach the engine wiring harness to the cylinder block.

GETtheMANUALS.org

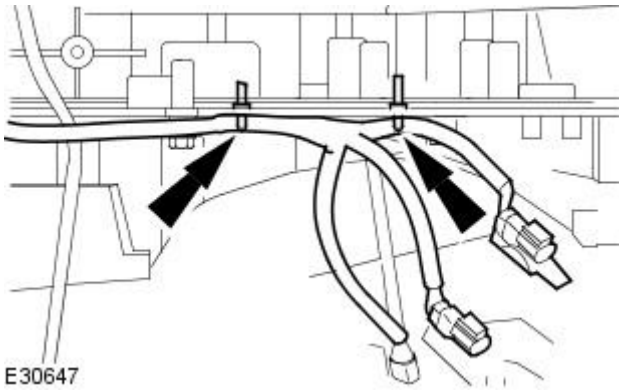


**98.** Attach the engine wiring harness to the cylinder block.

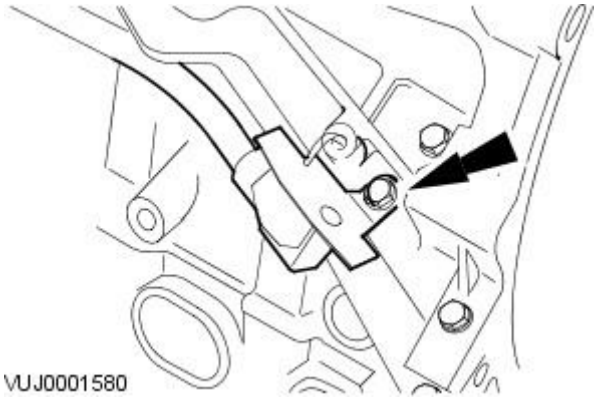


**99.** Attach the left-hand HO2S wiring harness.

- Install the retaining bolt.
- Tighten to 10 Nm.

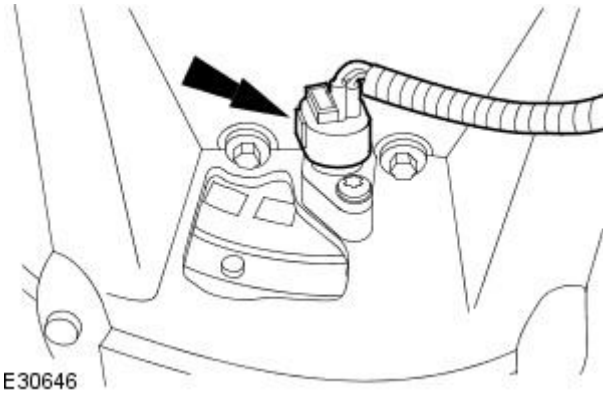


**100.** Connect the CKP sensor electrical connector.

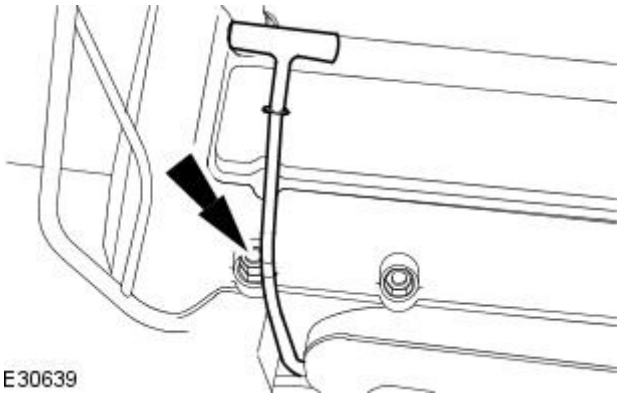


**101.** NOTE: Install a new O-ring seal.

Install the oil level indicator and tube.

- Tighten to 6 Nm.

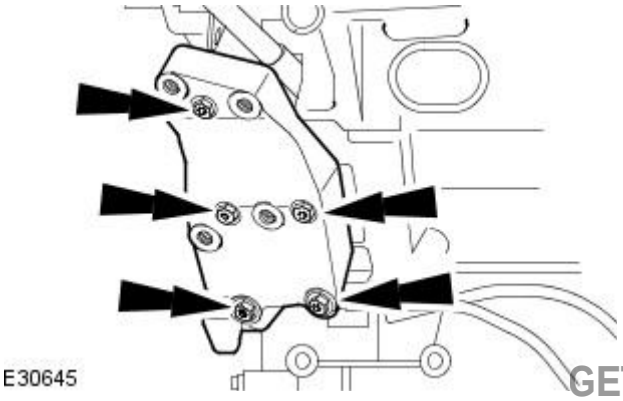


**102.** Install the power steering pump mounting bracket.

- Tighten to 25 Nm.

GETtheMANUALS.org

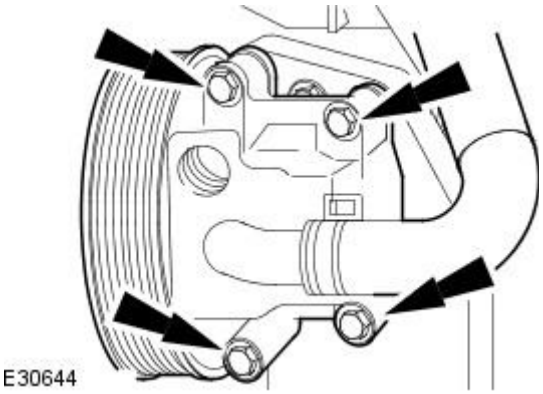


**103.** Install the power steering pump.

- Tighten to 25 Nm.

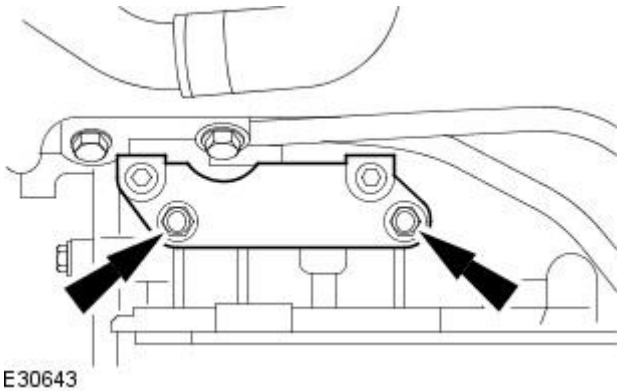


**104.** Install the A/C compressor mounting bracket.

- Tighten to 25 Nm.

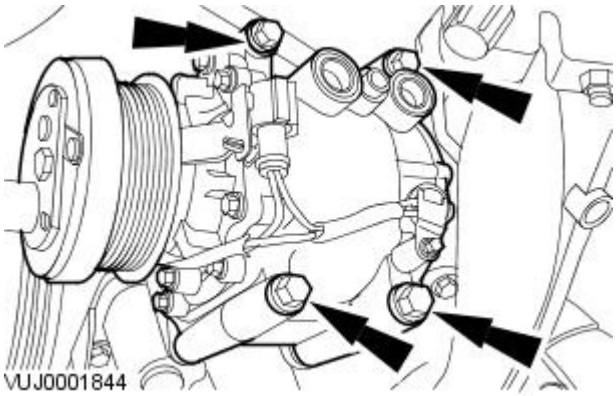


**105.** Install the A/C compressor.

- Tighten to 25 Nm.

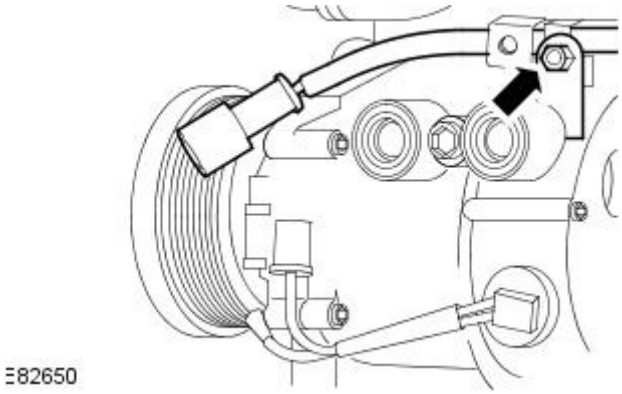


**106.** Attach the A/C compressor harness.

- Install the retaining nut.
- Tighten to 10 Nm.

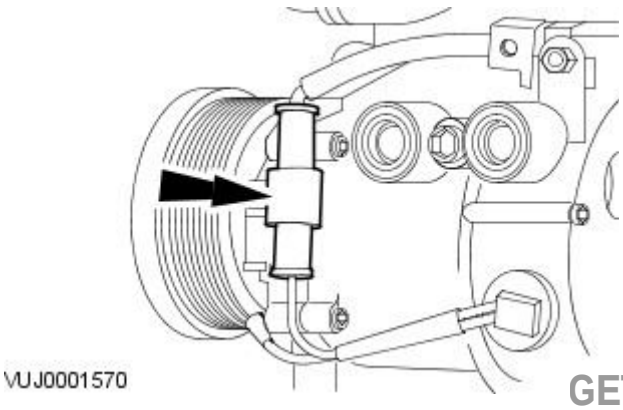


**107.** Connect the A/C compressor electrical connector.

GETtheMANUALS.org

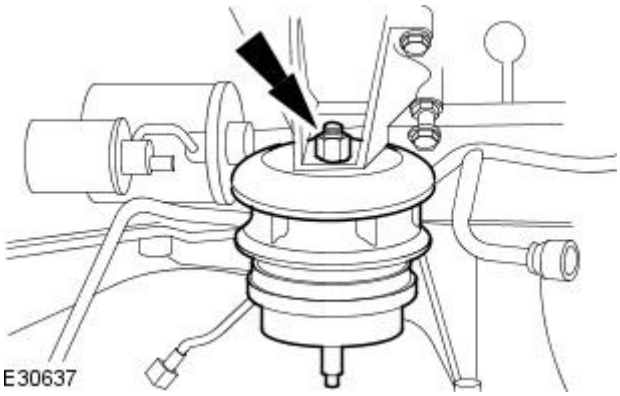


**108.** NOTE: Right-hand shown, left-hand similar.

Install both engine mounts.

- Tighten to 43 Nm.

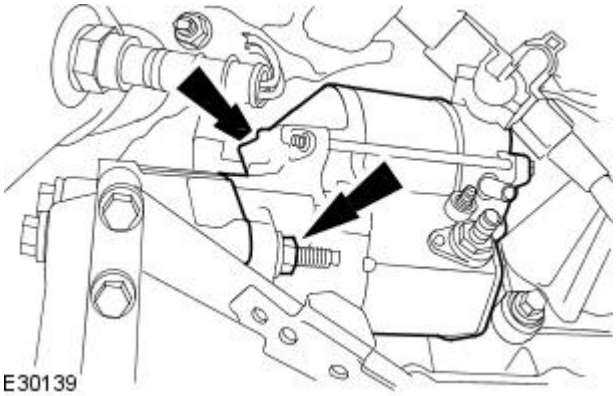


**109.** Install the starter motor.

- Tighten to 45 Nm.

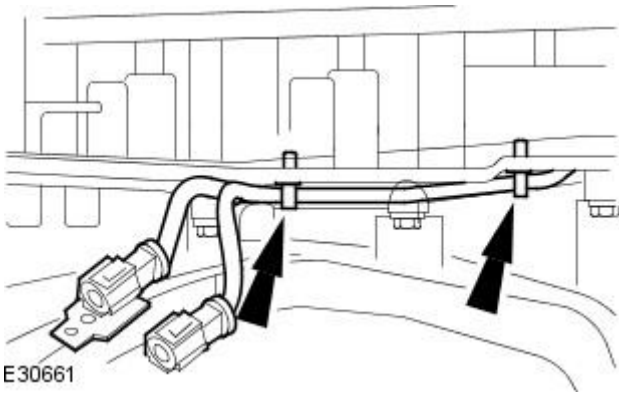


**110.** Attach the right-hand HO2S wiring harness to the cylinder block.

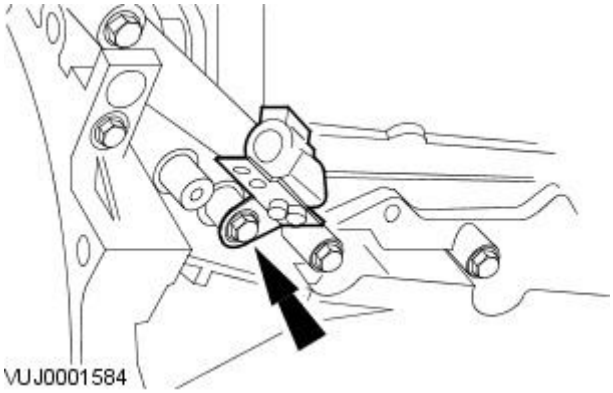


**111.** Attach the right-hand HO2S electrical connector retaining bracket.

- Install the retaining bolt.
- Tighten to 10 Nm.

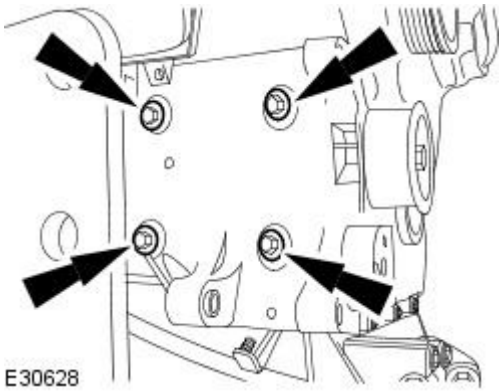


**112.** Install the generator mounting bracket.

- Tighten to 45 Nm.

GETtheMANUALS.org

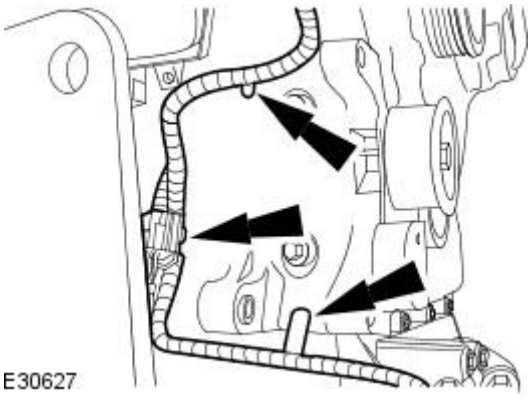


**113.** Attach the engine wiring harness.

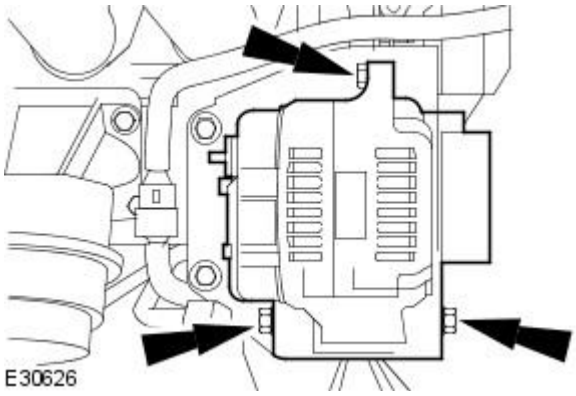


**114.** Install the generator.

- Tighten the generator upper retaining bolt to 21 Nm.
- Tighten the generator lower retaining bolts to 40 Nm.

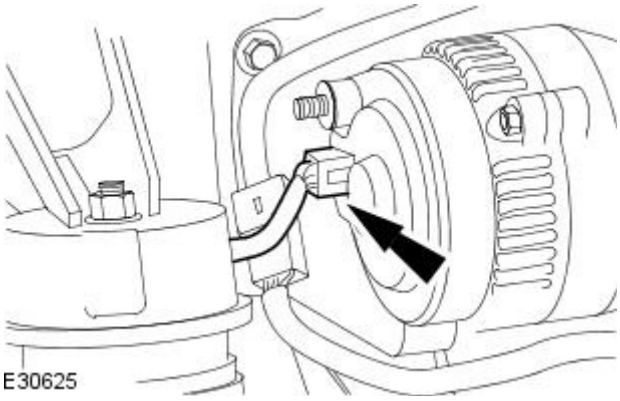


**115.** Connect the generator electrical connector.

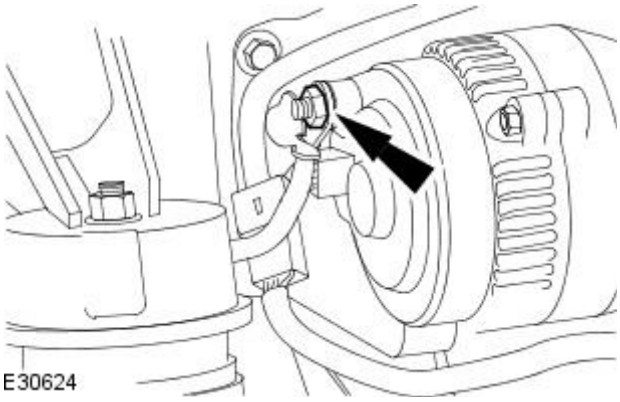


**116.** Connect the battery positive cable.

- Tighten to 12 Nm.

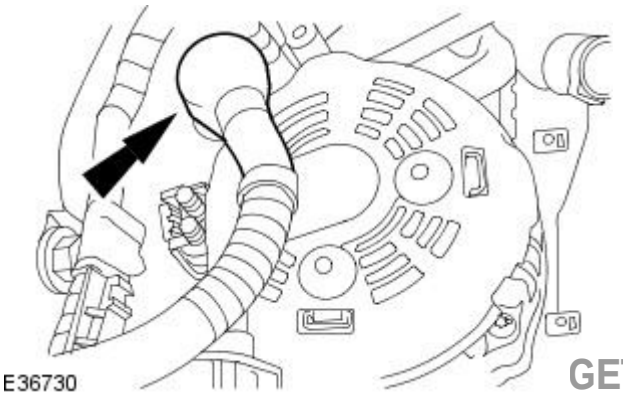


**117.** Attach the generator battery positive cable protective cover.

GETtheMANUALS.org

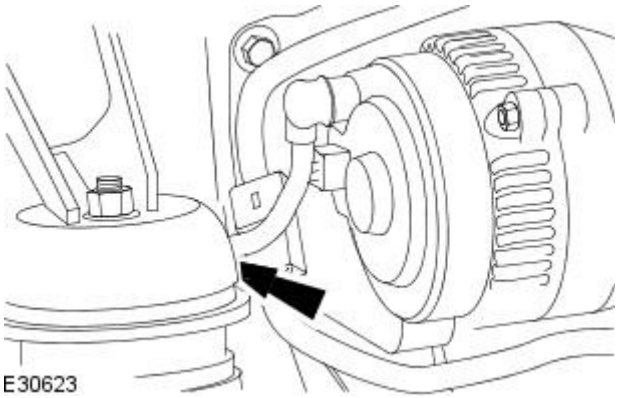


**118.** Attach the battery positive cable.

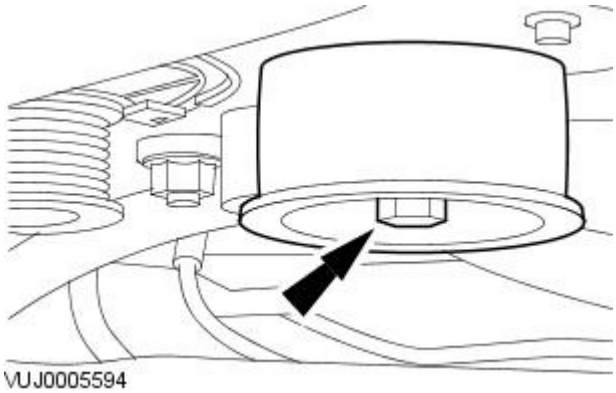


**119.** Install the accessory drive belt idler pulley.

- Tighten to 25 Nm.

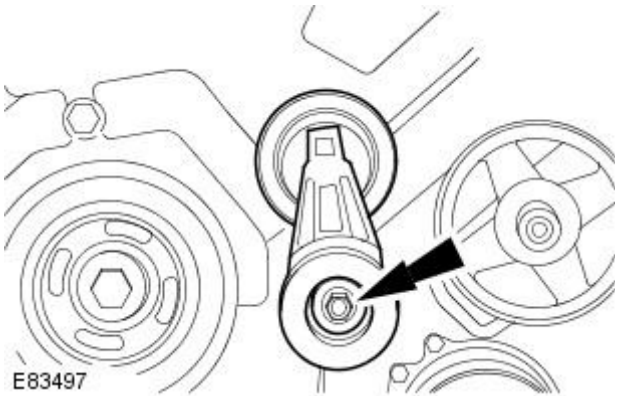


**120.** Install the accessory drive belt tensioner.

- Install the accessory drive belt.
- Tighten to 45 Nm.

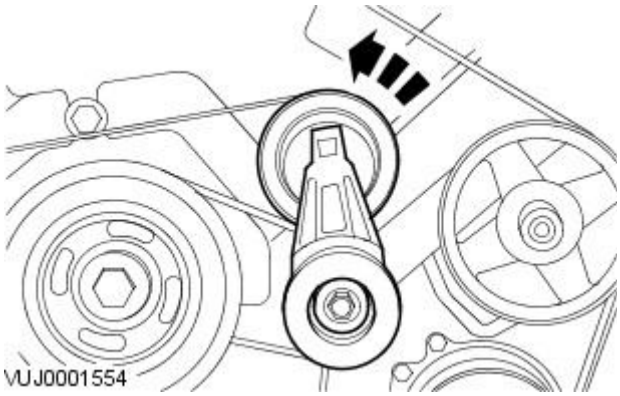


**121.** Release the accessory drive belt tension.

- Attach the accessory drive belt.

Vehicles with supercharger

GETtheMANUALS.org

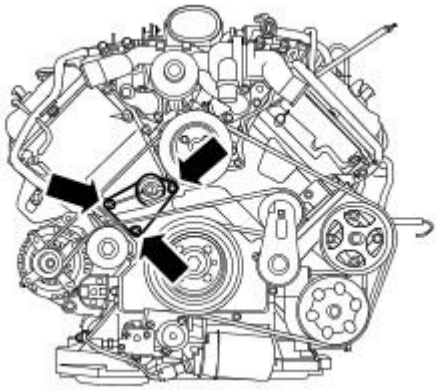

E82649

**122.** Install the mounting bracket.

- Tighten to 9 Nm.

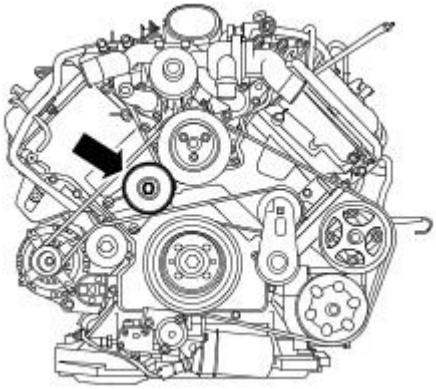

E82648

**123.** Install the supercharger belt idler pulley.

- Tighten to 40 Nm.

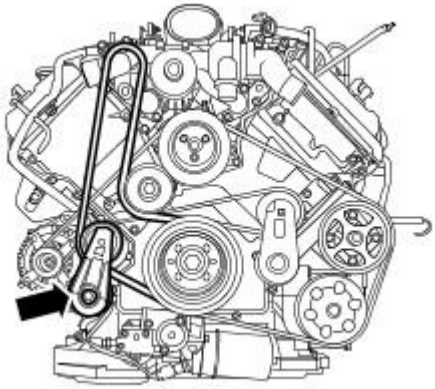

E82647

**124.** Install the supercharger belt tensioner.

- Install the supercharger belt.
- Tighten to 40 Nm.

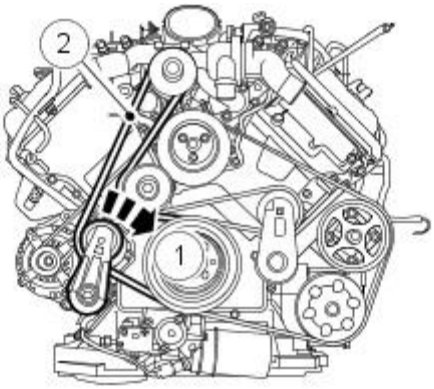


E82646

**125.** Attach the supercharger belt.

- Use a ½ inch square drive bar to rotate the supercharger belt tensioner.
- Attach the supercharger belt.

Vehicles without supercharger

GETtheMANUALS.org

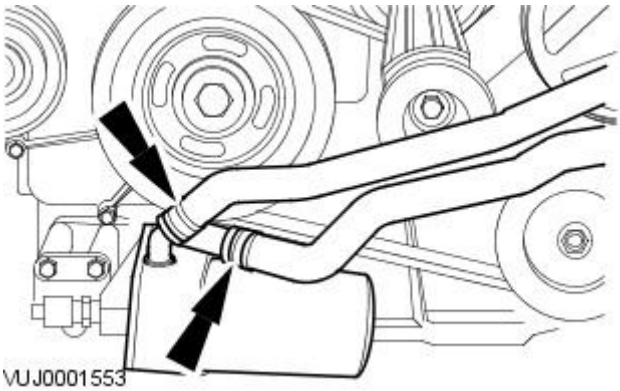


**126.** Connect the oil cooler hoses.

All vehicles

**127.** Remove the engine from the engine stand.

**128.** Install the engine into the vehicle.

GETtheMANUALS.org

# Engine - V8 4.2L Petrol / V8 S/C 4.2L Petrol - Engine

Removal

| Special Tool(s) | |
|---|---|
| 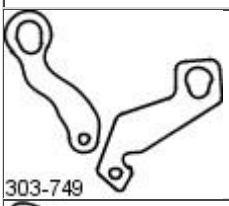 303-749 | Engine lifting brackets<br><br>303-749 |
| 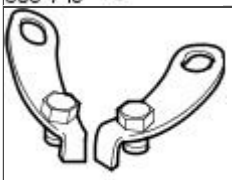 303-536 | Engine lifting brackets<br><br>303-536 |
| 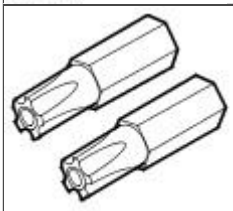 418-535 | 5 point security torx bit<br><br>418-535 |

## Removal

All Vehicles

1. Reclaim the air conditioning refrigerant
   For additional information, refer to Section 412-00 Climate Control System - General Information.
2. Remove the automatic transmission
   For additional information, refer to Section 307-01 Automatic Transmission/Transaxle.
3. NOTE: Left hand shown, right hand similar.

   Remove the engine mount retaining nuts.

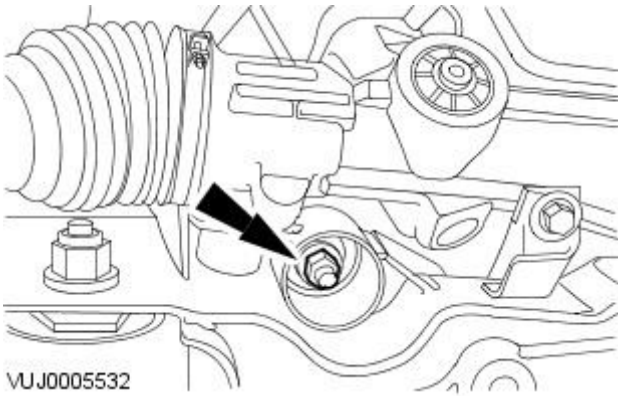


Vehicles with supercharger

4. Detach the oil cooler lines.
   - Remove and discard the oil cooler O rings

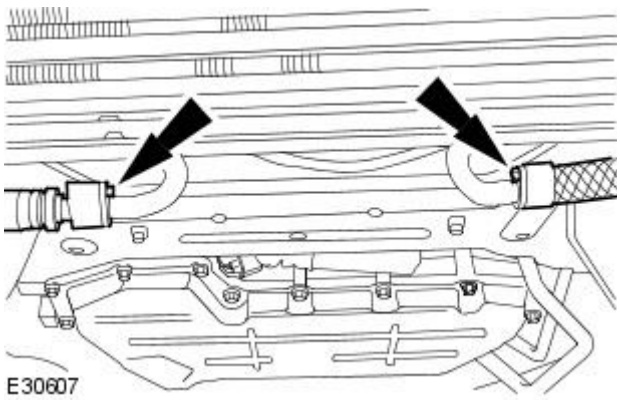


GETtheMANUALS.org

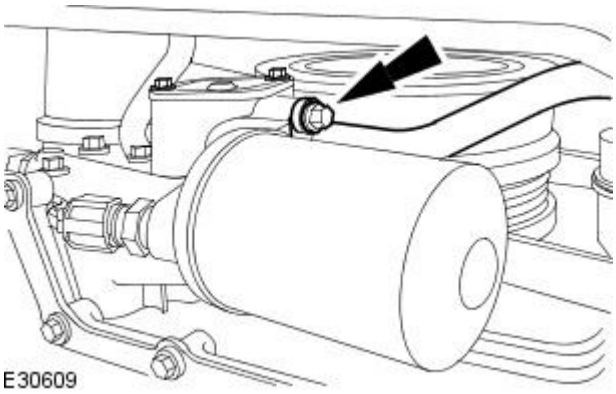


**5.** Remove the oil cooler inlet line.

- Remove and discard the O rings.

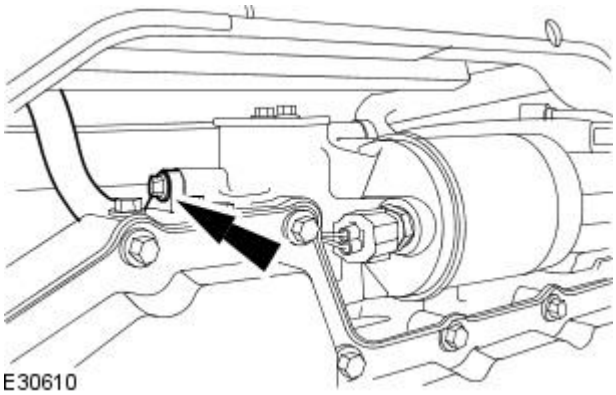


**6.** Remove the oil cooler outlet line.

- Remove and discard the O rings.

All vehicles

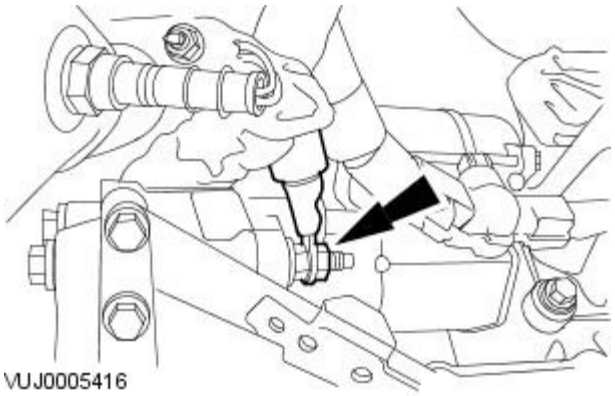


**7.** Disconnect the engine ground cable.

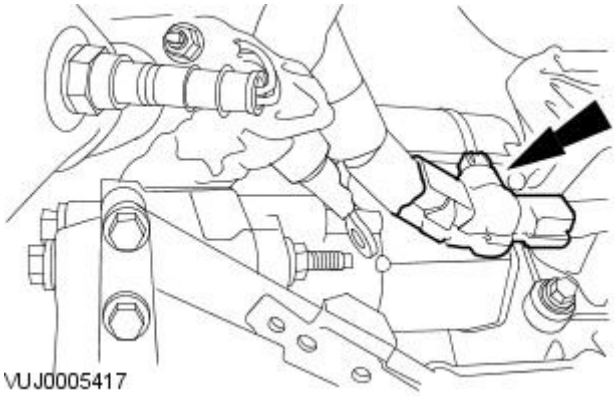


**8.** Attach the starter motor positive cable cover.

GETtheMANUALS.org

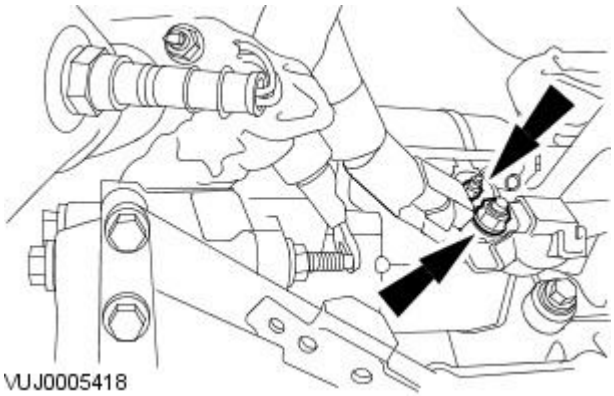


**9.** Detach the starter motor positive cable.

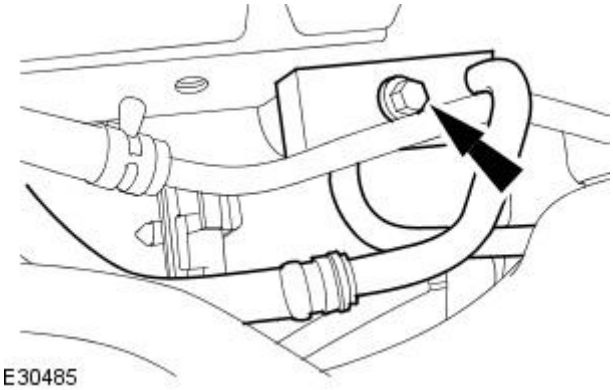


**10.** Detach the air conditioning compressor line.

- Remove and discard the O-ring seals

**11.** CAUTION: Do not use heat to loosen a seized wheel nut. Excessive heat may cause damage to the wheel and wheel bearings.

Loosen the wheel nuts.

**12.** Remove the right hand wheel and tire assembly.

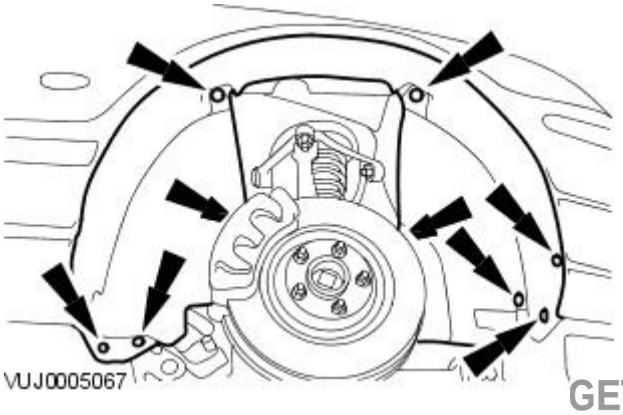


**13.** Remove the right hand fender splash shield.

GETtheMANUALS.org

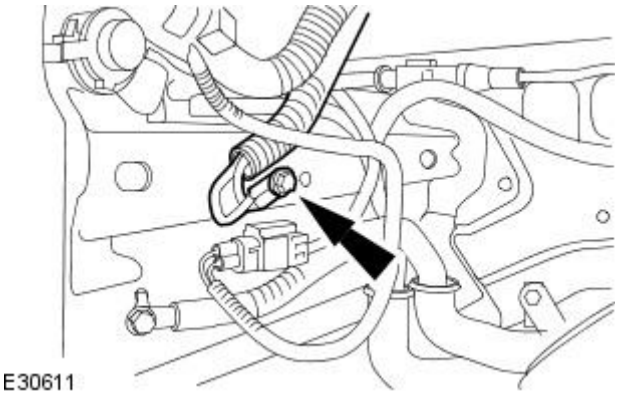


**14.** Detach the ground cable.

**15.** Lower the vehicle.

**16.** Remove the hood.
For additional information, refer to Section 501-03 Body Closures.

**17.** Remove the radiator assembly. For additional information, refer to Section 303-03A Engine Cooling / 303-03B Supercharger Cooling / 303-03C Engine Cooling.

**18.** Remove the cabin air filter.
For additional information, refer to Section 412-01 Air Distribution and Filtering.

**19.** Remove the engine compartment support.

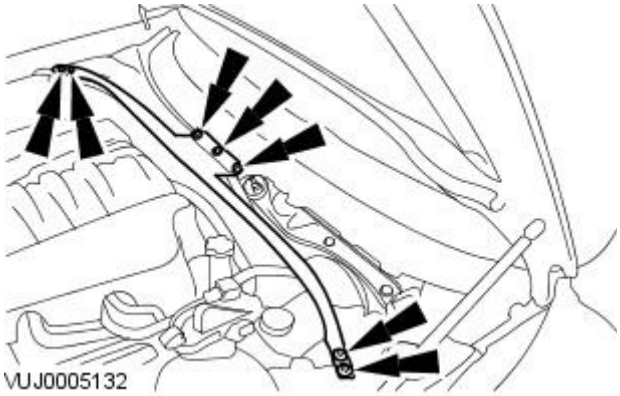


**20.** Remove the cabin air filter housing retaining nut.

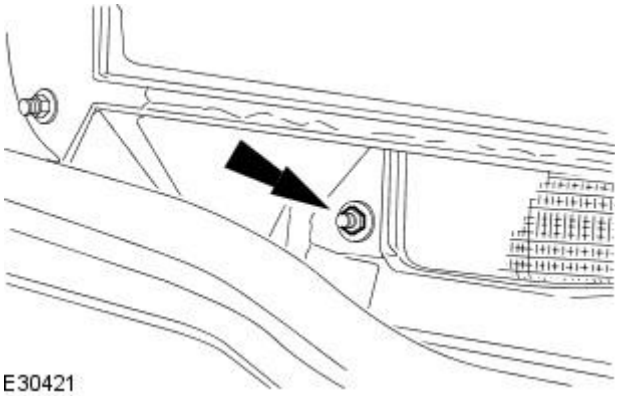


**21.** Remove the cabin air filter housing.

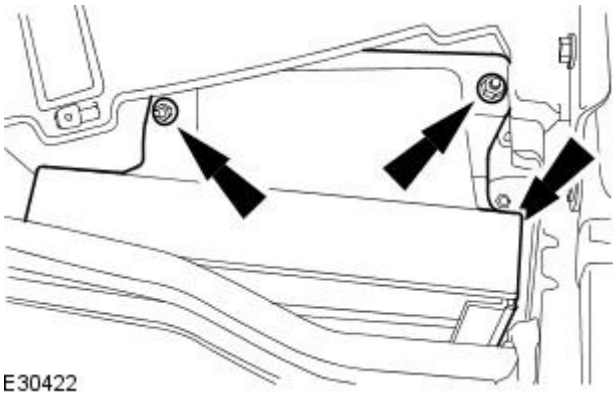


GETtheMANUALS.org

**22.** Remove the engine compartment panel.

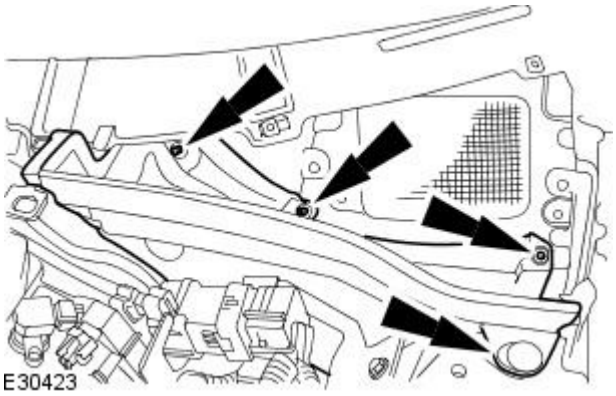


**23.** NOTE: The engine control module (ECM) electrical connector retaining bolt remains captive in the electrical connector

Disconnect the ECM electrical connector.

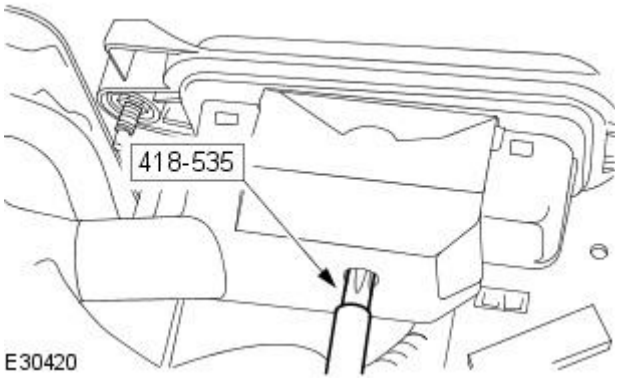


**24.** Disconnect the engine harness electrical connector.

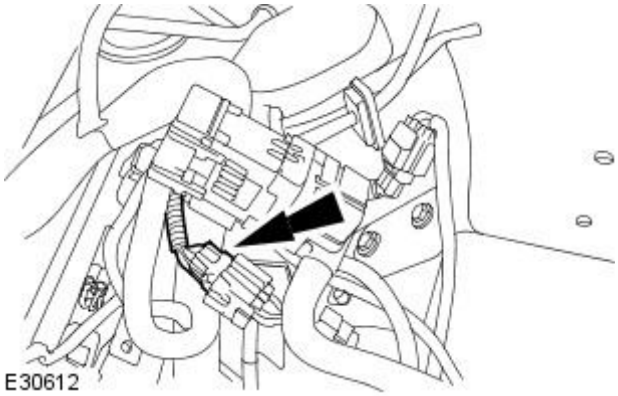


**25.** Disconnect the engine harness electrical connector.

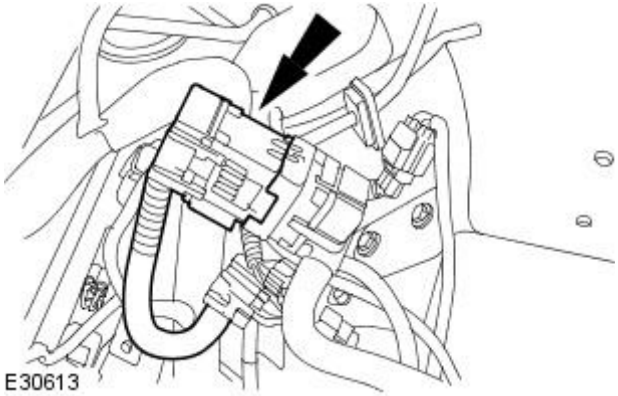


**26.** Detach the engine harness electrical connector.

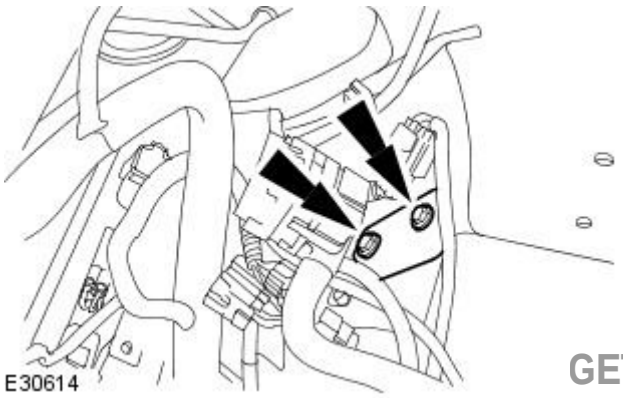


GETtheMANUALS.org

27. Remove the air cleaner. For additional information, refer to Section 303-12A Intake Air Distribution and Filtering / 303-12B Intake Air Distribution and Filtering / 303-12C Intake Air Distribution and Filtering.

28. Remove the power steering fluid reservoir.
For additional information, refer to Section 211-02 Power Steering.

Vehicles without supercharger

29. Remove the air cleaner. For additional information, refer to Section 303-12A Intake Air Distribution and Filtering / 303-12B Intake Air Distribution and Filtering / 303-12C Intake Air Distribution and Filtering.

Vehicles with supercharger

30. Remove the air cleaner. For additional information, refer to Section 303-12A Intake Air Distribution and Filtering / 303-12B Intake Air Distribution and Filtering / 303-12C Intake Air Distribution and Filtering.

31. Remove the air intake tube.

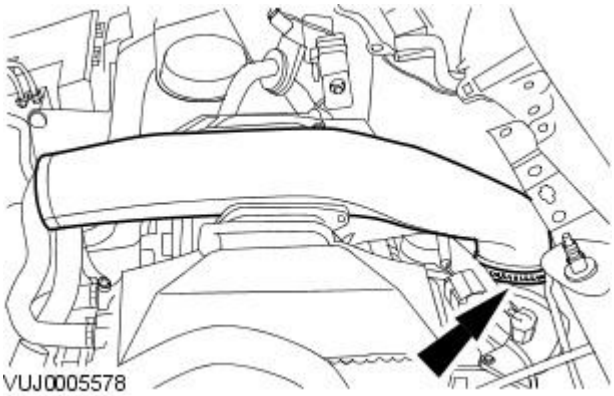


All Vehicles

32. Install the right hand rear engine lifting bracket.

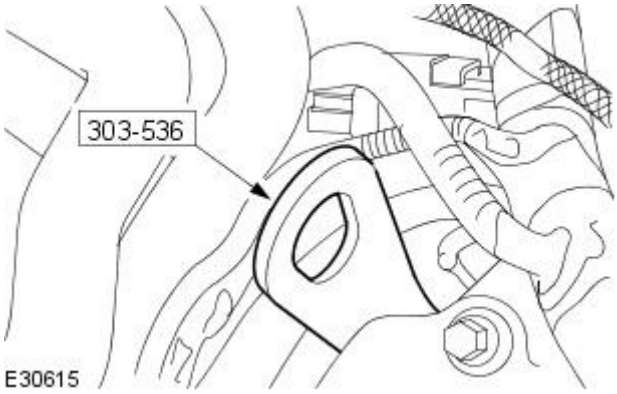


33. Detach the bulkhead ground cable.

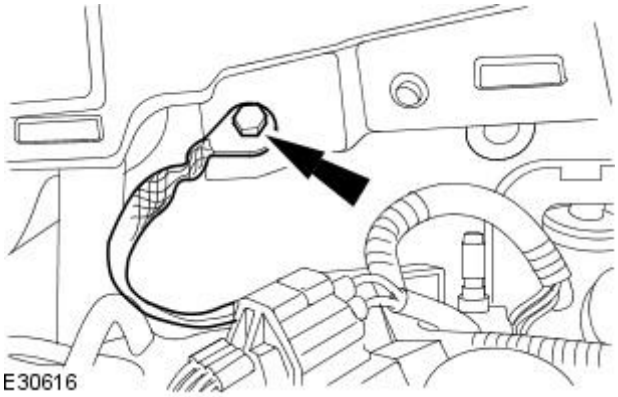


GETtheMANUALS.org

**34.** Install the left hand rear engine lifting bracket.

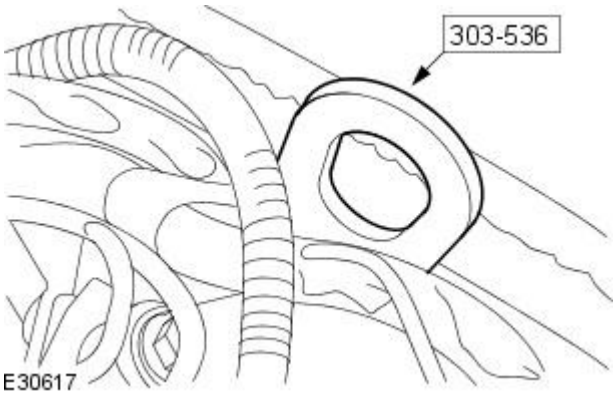


**35.** Install the front engine lifting eyes.

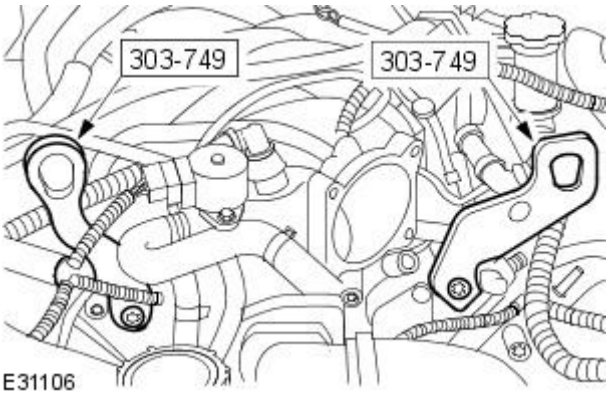


Vehicles with supercharger

**36.** Detach the brake booster vacumn pipe.

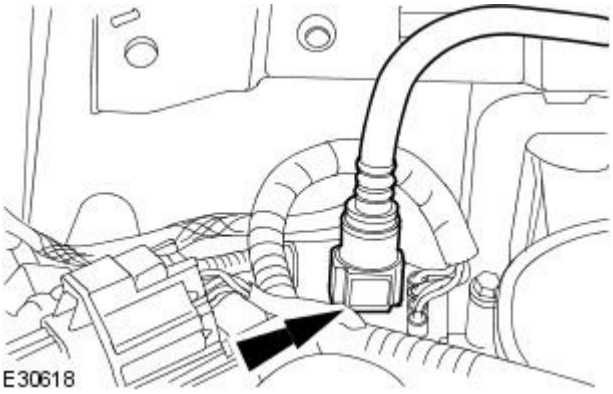


Vehicles without supercharger

**37.** Detach the brake booster vacumn pipe.

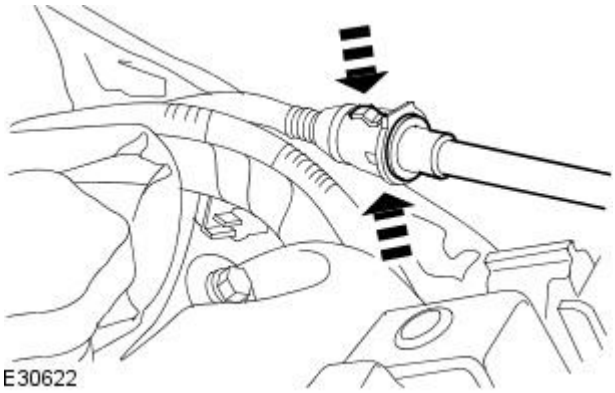


All vehicles

GETtheMANUALS.org

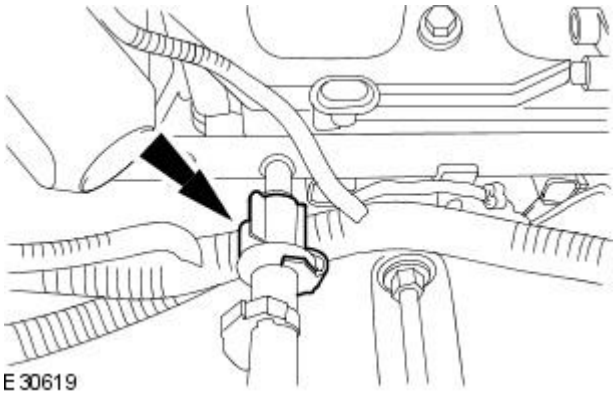


**38.** Detach the fuel line retaining clip.

**39.** Detach the fuel line.
For additional information, refer to Section 310-00 Fuel System - General Information.

**40.** Detach fuel purge line.

- Remove and discard retaining clip.

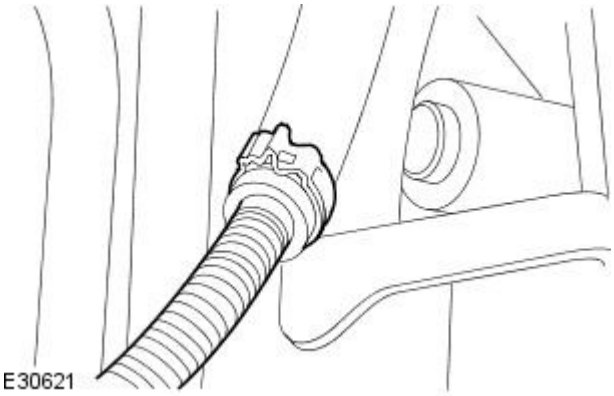


**41.** Remove the engine using a suitable hydraulic lift.

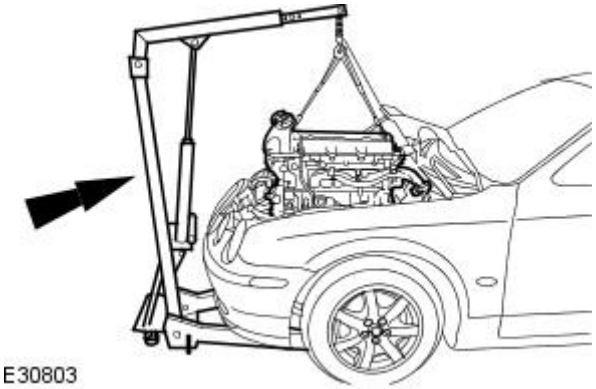


GETtheMANUALS.org

# Engine - V8 4.2L Petrol / V8 S/C 4.2L Petrol - Engine

Disassembly

| Special Tool(s) | |
|---|---|
| 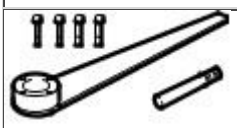 303-191 | Crankshaft locking, main tool<br>303-191 |
| 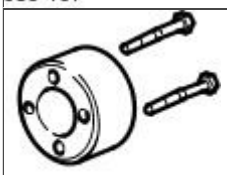 303-191-02 | Adapter<br>303-191-02 |
| 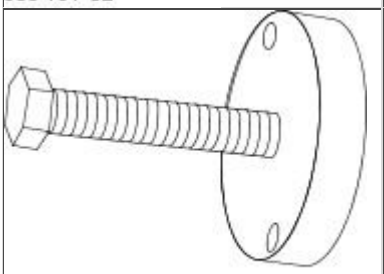 303-58 | Crankshaft pulley/damper remover<br>303-588 |
| 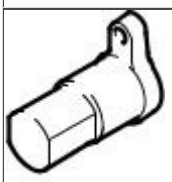 303-645 | Crankshaft setting, main tool<br>303-645 |
| 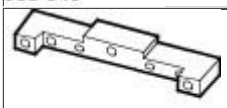 303-530 | Camshaft setting<br>303-530 |
| 303-532 | Timing chain tensioning tool<br>303-532 |
| 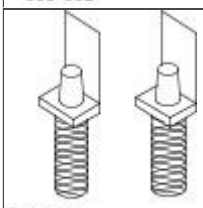 303535 | Cylinder Bore Protectors<br>303-535 |

## Disassembly

Vehicles without supercharger

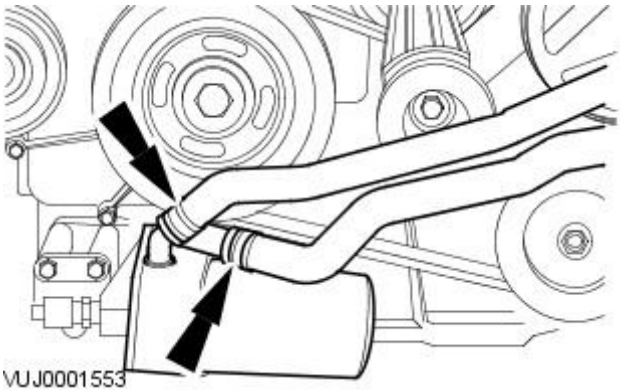


**1.** Disconnect the oil cooler hoses.

GETtheMANUALS.org

Vehicles with supercharger

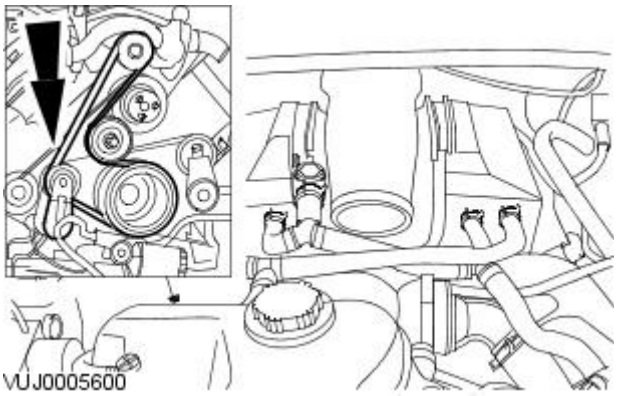


**2.** Detach the supercharger belt.

- Use a 1/2 inch square drive bar to rotate the supercharger belt tensioner.
- Detach the supercharger belt.

All vehicles

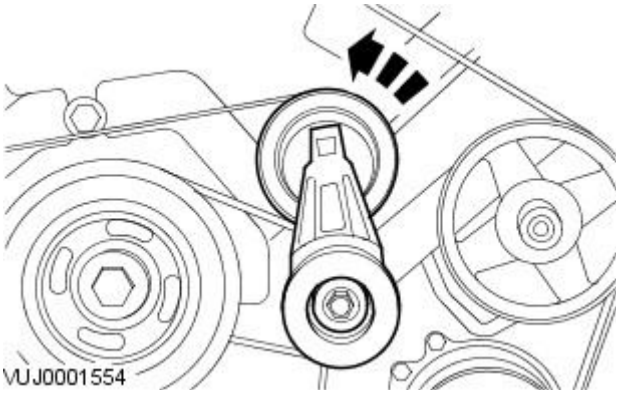


**3.** Release the accessory drive belt tension.

- Detach the accessory drive belt.

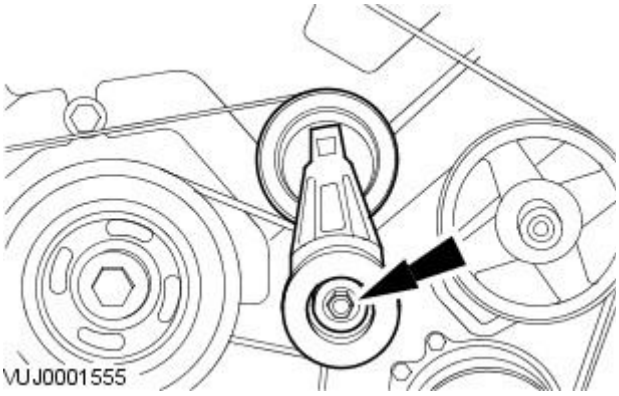


**4.** Remove the accessory drive belt tensioner.

- Remove the accessory drive belt.

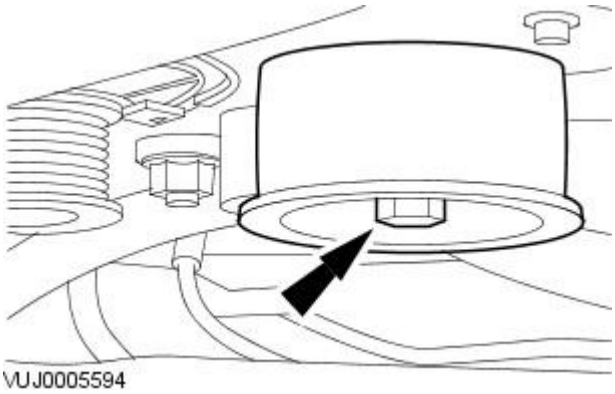


**5.** Remove the accessory drive belt idler pulley.

GETtheMANUALS.org

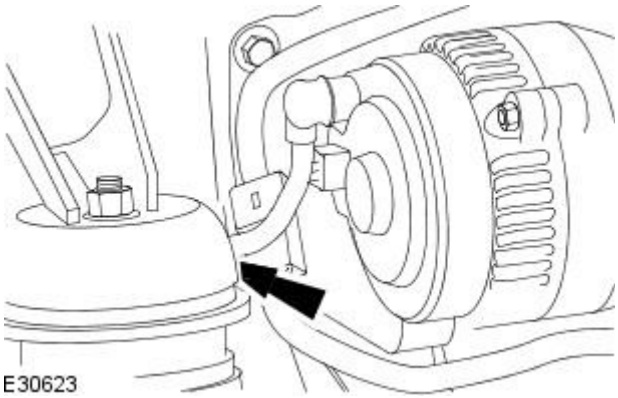


**6.** Detach the wiring harness.

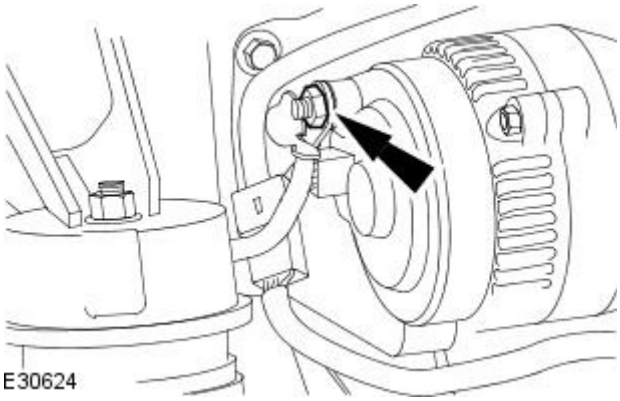


**7.** Remove the wiring harness.

- Remove the retaining nut.

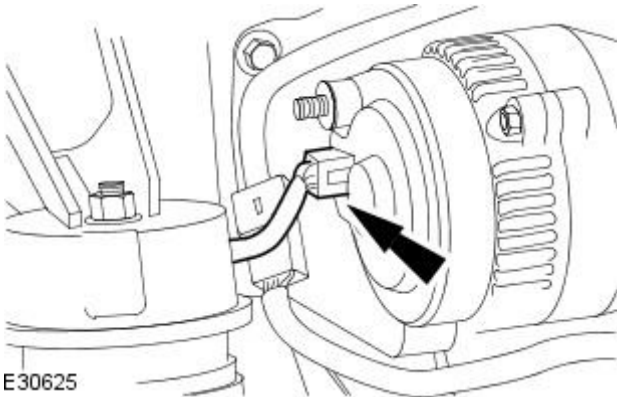


**8.** Disconnect the generator electrical connector.

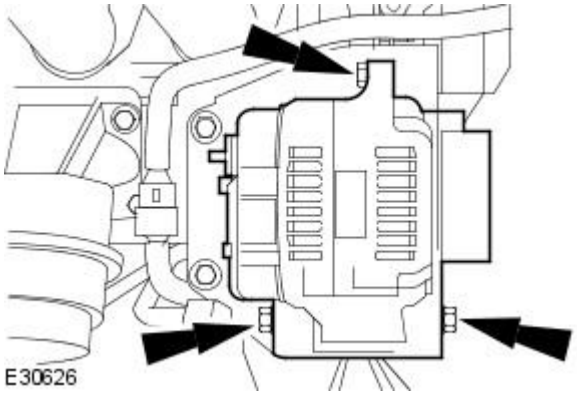


**9.** Remove the generator.

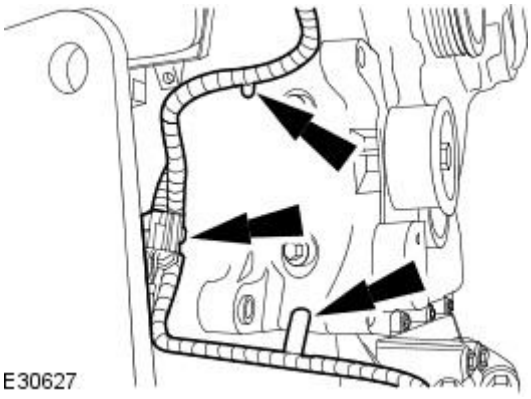


**10.** Detach the engine wiring harness.

GETtheMANUALS.org

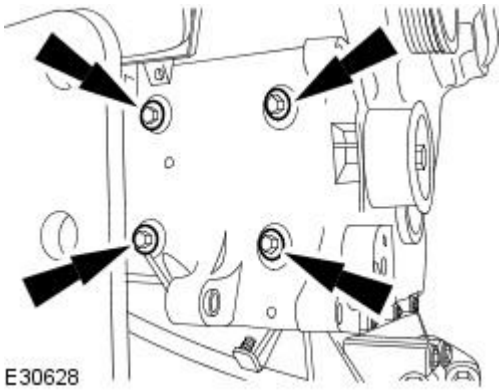


**11.** Remove the generator mounting bracket.

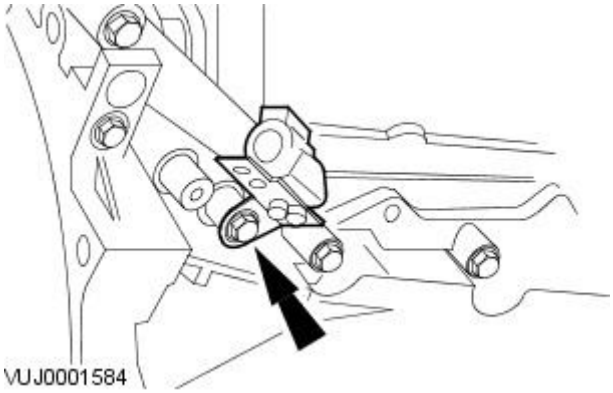


**12.** Detach the right hand oxygen sensor retaining bracket.

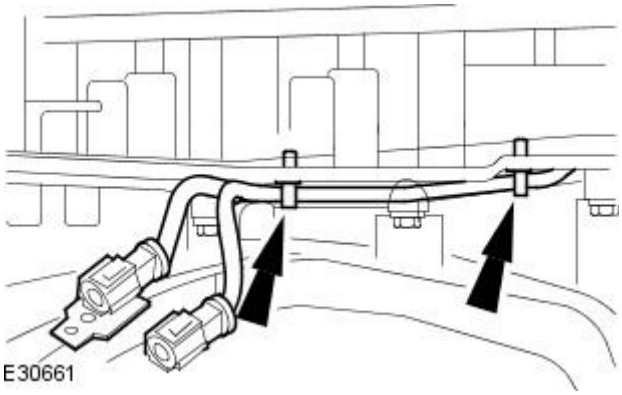


**13.** Detach the engine wiring harness.

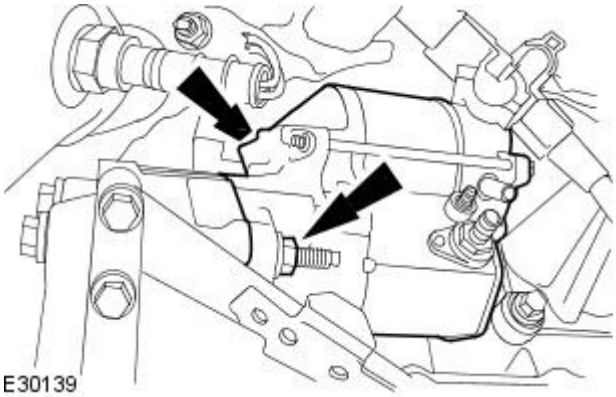


**14.** Remove the starter motor.

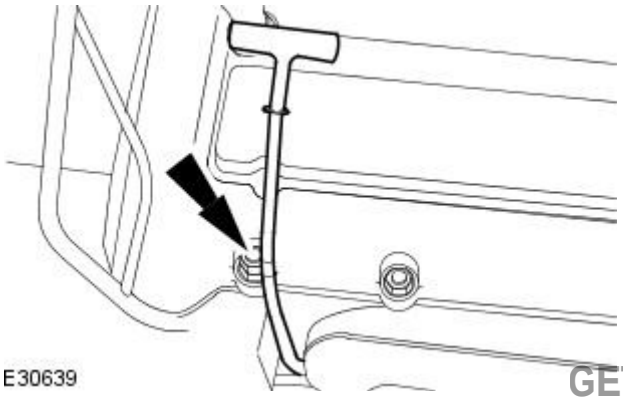


**15.** Remove the oil level indicator and tube.

- Remove and discard the O-ring seal.

GETtheMANUALS.org

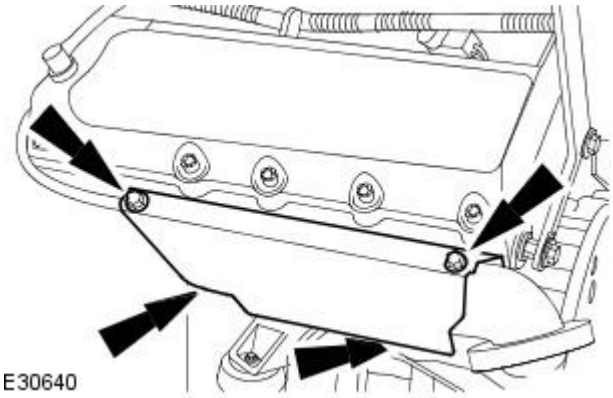


**16.** Remove the heat shield.

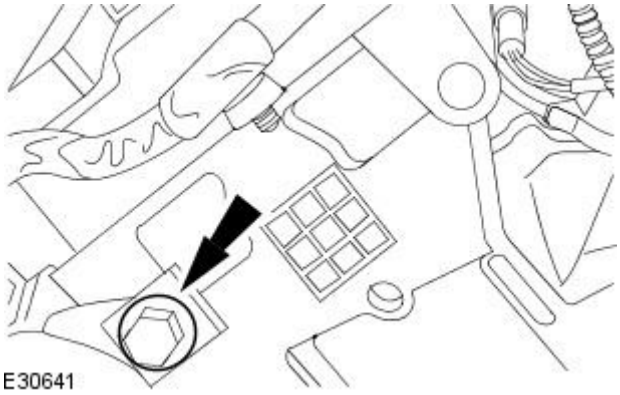


**17.** Remove the heat shield retaining bolt.

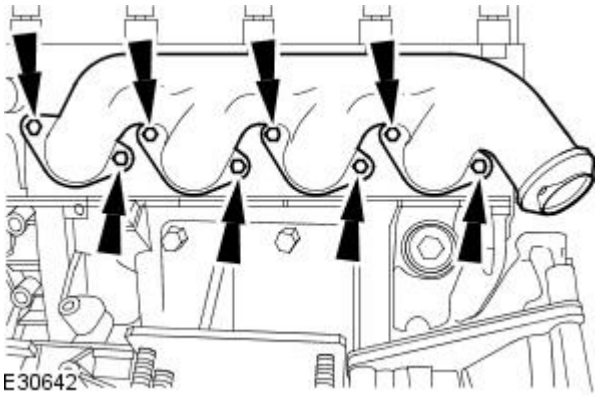


**18.** Remove the left-hand exhaust manifold.

- Remove and discard the gasket.

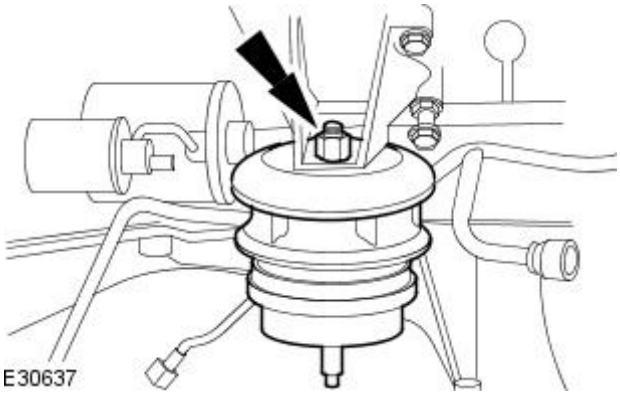


**19.** Remove the left-hand engine mount.

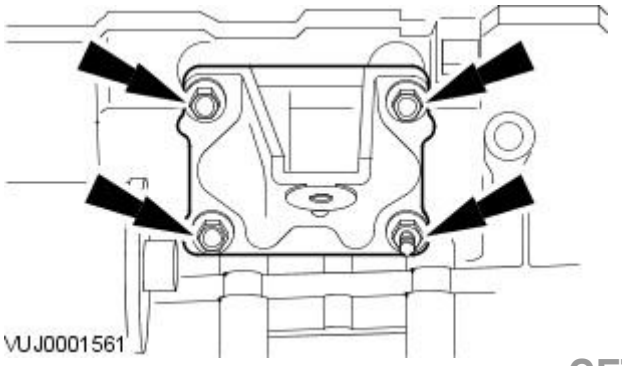


**20.** Remove the left-hand engine mounting bracket.

GETtheMANUALS.org

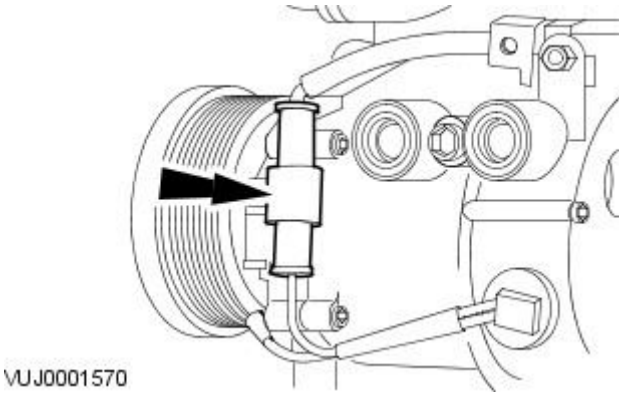


**21.** Disconnect the air conditioning compressor electrical connector.

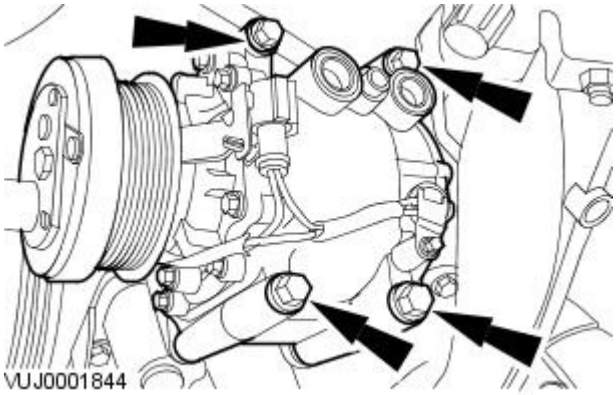


**22.** Remove the A/C compressor.

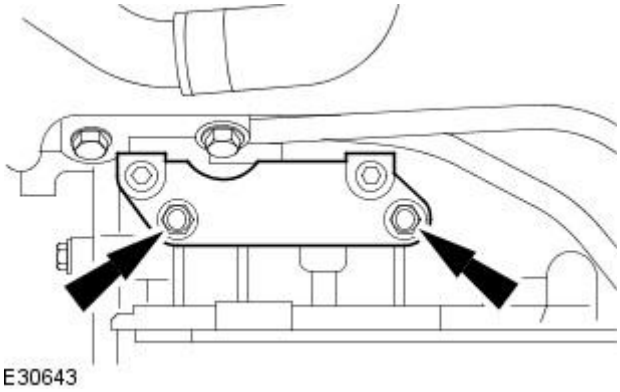


**23.** Remove the air conditioning compressor mounting bracket.

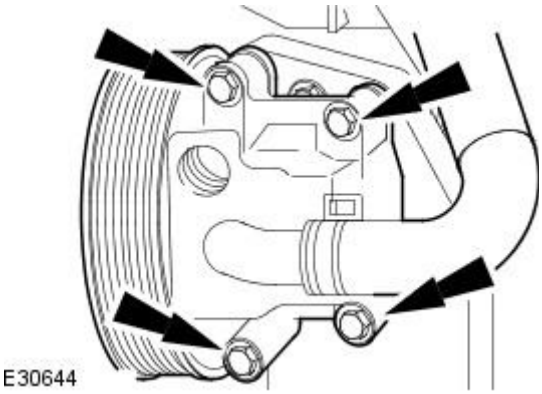


**24.** Remove the power steering pump.

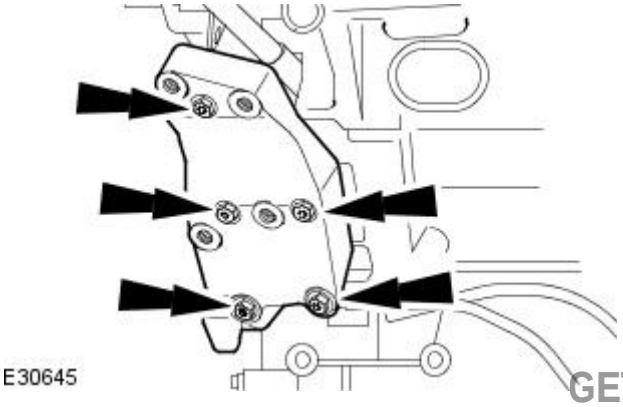


**25.** Remove the power steering pump mounting bracket.

GETtheMANUALS.org

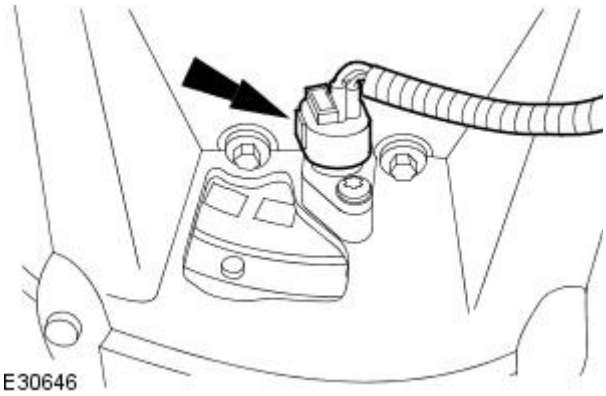


**26.** Disconnect the crankshaft position sensor electrical connector.

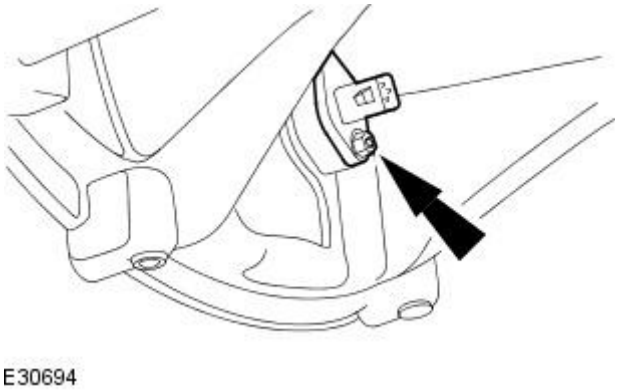


**27.** Remove the crankshaft position sensor.

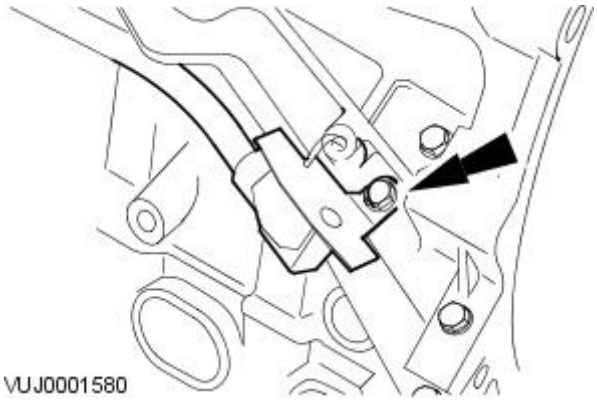


**28.** Detach the engine wiring harness.

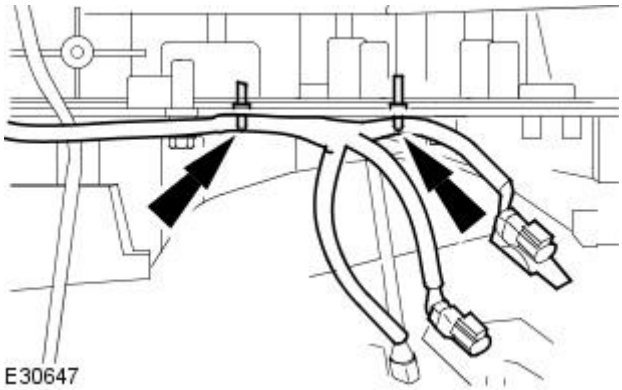


**29.** Detach the engine wiring harness.

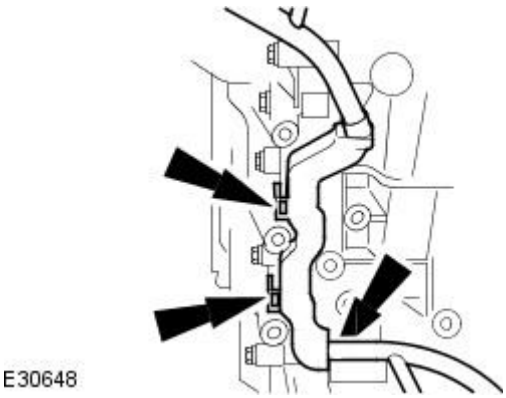


**30.** Detach the engine wiring harness.

GETtheMANUALS.org

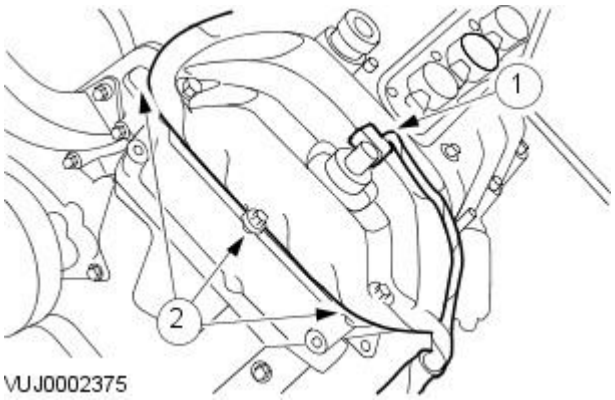


**31.** Detach the engine wiring harness.

1. Disconnect the variable valve timing (VCT) solenoid electrical connector.
2. Detach the engine wiring harness.

Vehicles without supercharger

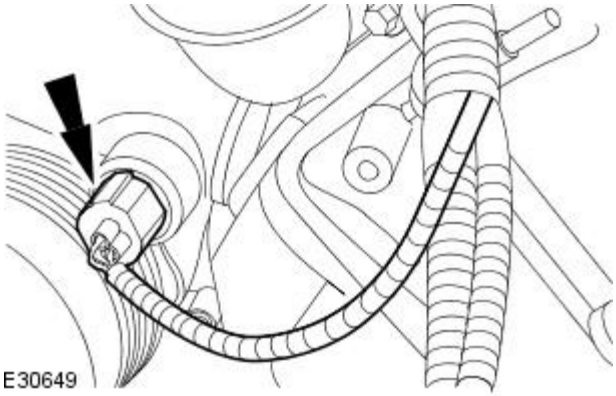


**32.** Disconnect the coolant temperature sensor electrical connector.

Vehicles with supercharger

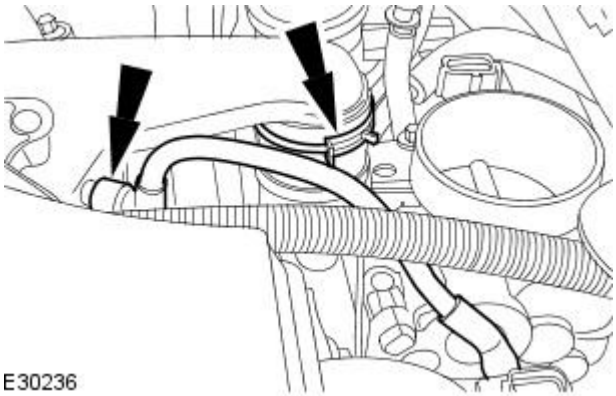


**33.** Detach the hoses.

- Reposition the hose retaining clip.

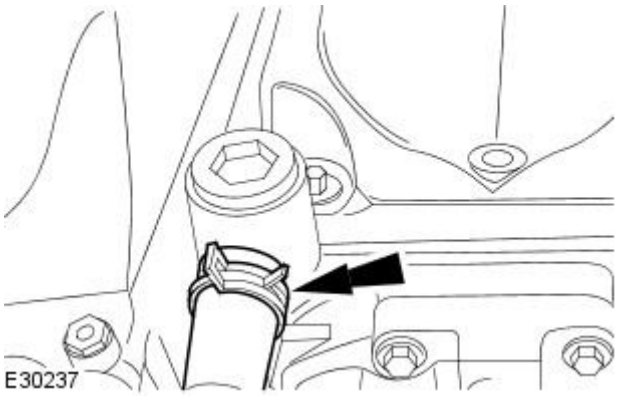


**34.** Detach the supercharger outlet pipe coolant hose.

- Cap the coolant ports.

GETtheMANUALS.org

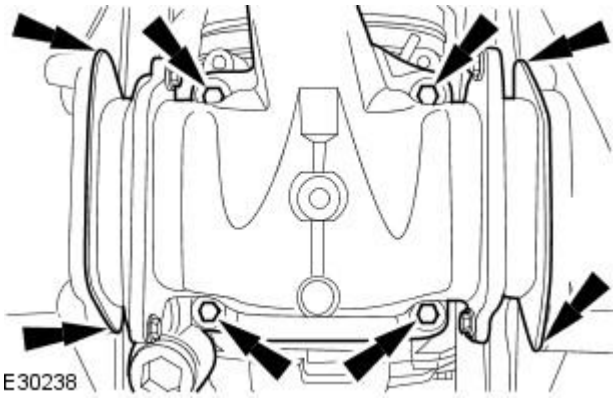


**35.** CAUTION: Make sure no foreign matter enters the supercharger.

Remove the supercharger outlet pipe

**36.** Remove and discard the supercharger outlet pipe gasket.

**37.** Remove and discard the supercharger outlet pipe retaining bolt seals.

**38.** Remove and discard the supercharger outlet pipe to charge air coolers ducts.

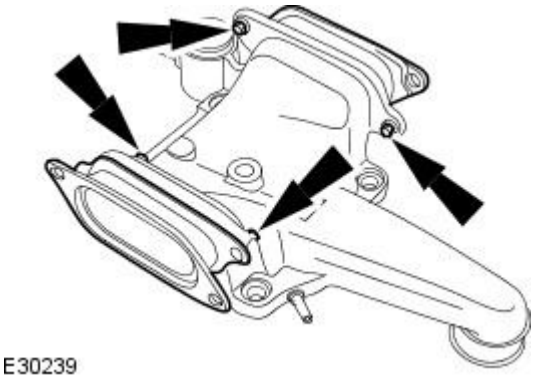


**39.** Disconnect the thermostat housing hoses

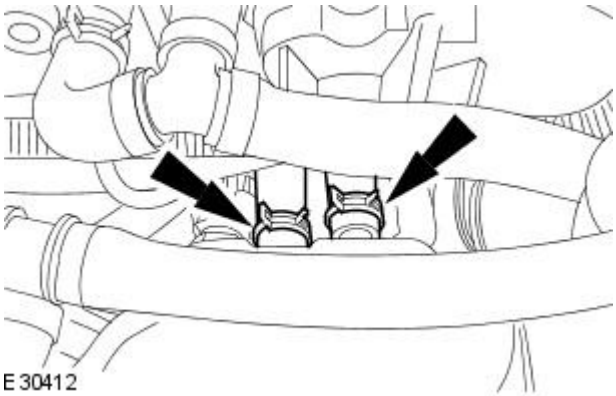


**40.** Disconnect the coolant temperature sensor electrical connector.

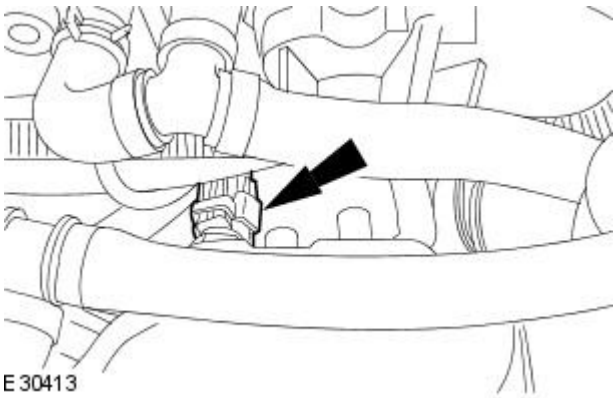


GETtheMANUALS.org

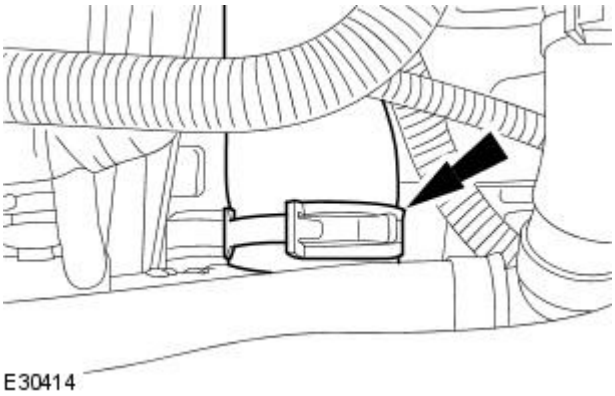


**41.** Reposition the thermostat housing hose retaining clip.

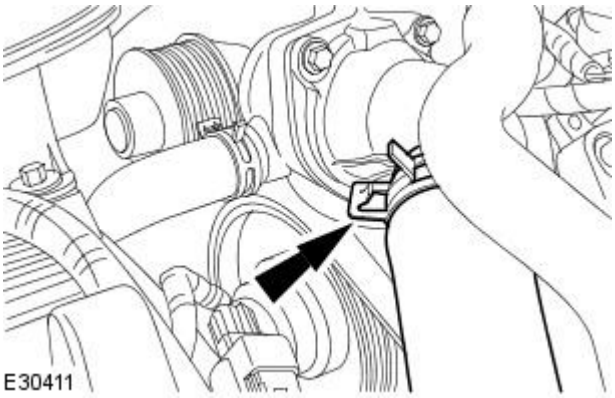


**42.** Disconnect the hose.

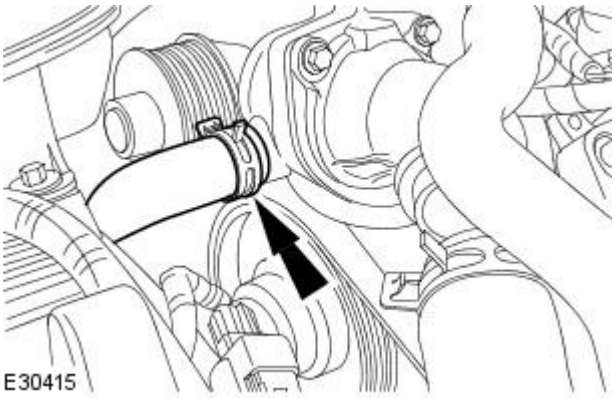


**43.** Disconnect the hose.

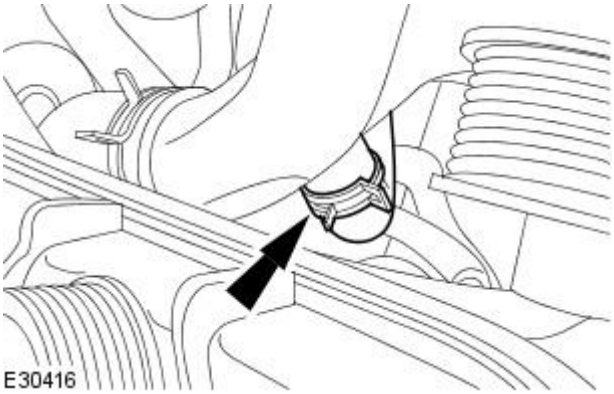


**44.** Disconnect the hose.

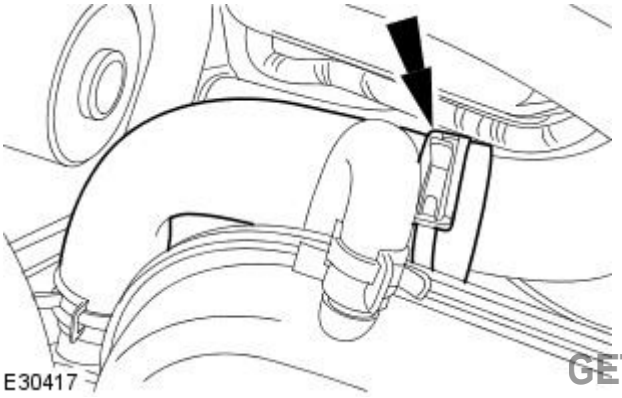


**45.** Disconnect the hose.

GETtheMANUALS.org

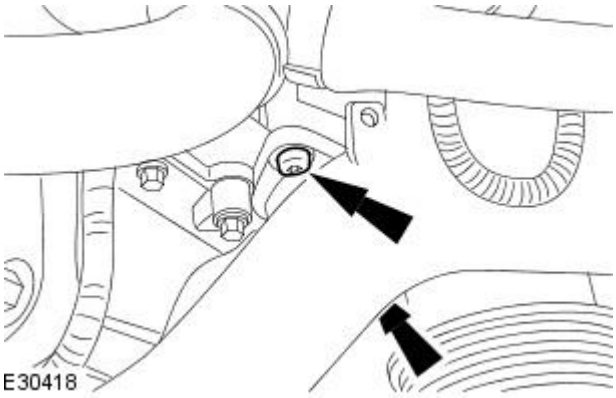


**46.** Remove the thermostat housing retaining bolts.

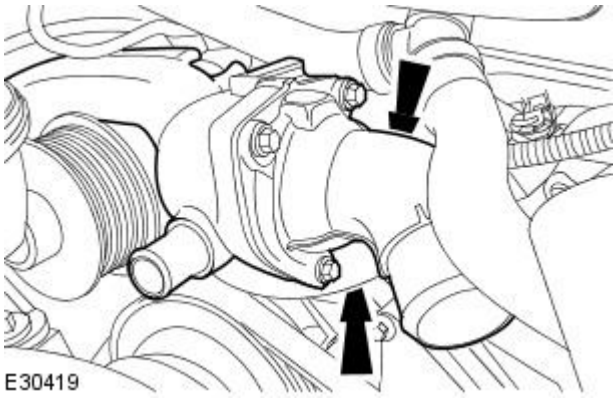


**47.** Remove the thermostat housing.

- Remove and discard thermostat housing O-ring seals.

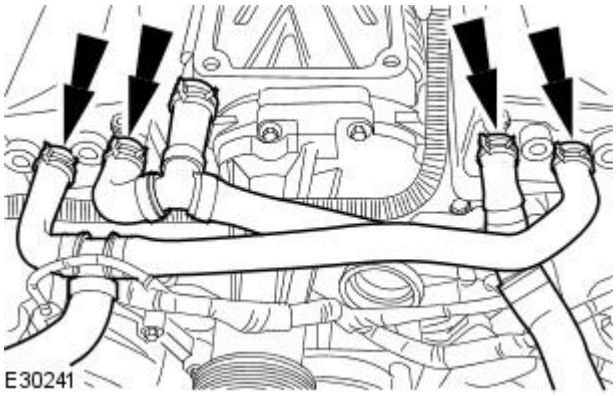


**48.** Disconnect the charge air cooler coolant pipes.

**49.** Disconnect the intake air temperature (IAT) sensor electrical connector.

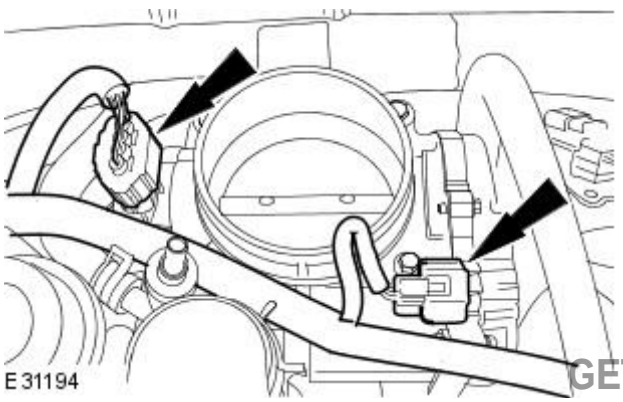


**50.** Disconnect the electrical connectors.

GETtheMANUALS.org

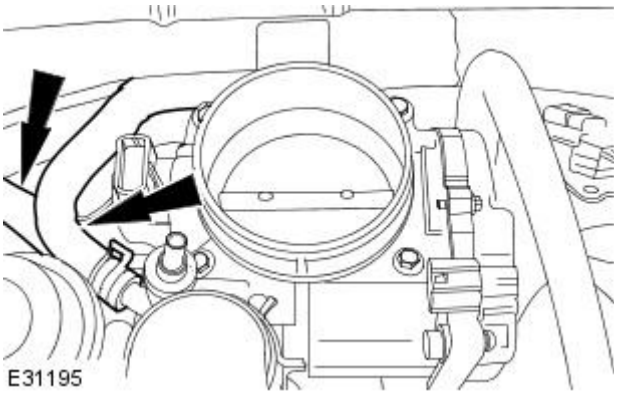


**51.** Detach the coolant hose from the throttle body.

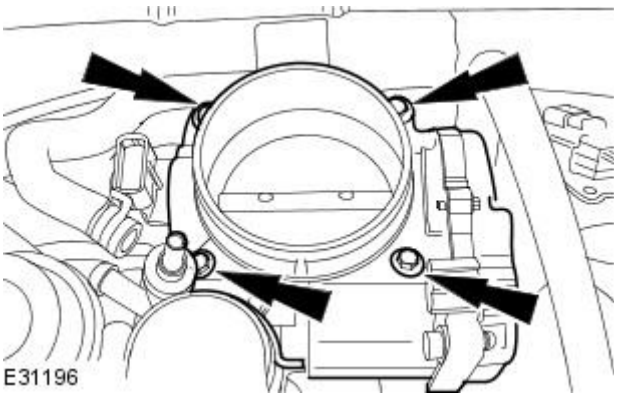


**52.** Remove the throttle body.

- Remove and discard the gasket.

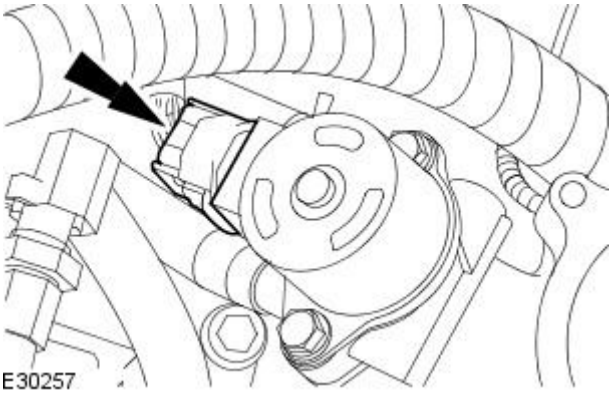


**53.** Disconnect the exhaust gas recirculation (EGR) valve electrical connector.

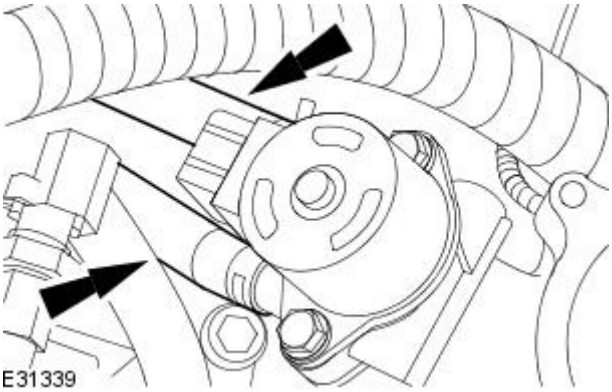


**54.** NOTE: Cap the exposed ports.

Disconnect the coolant hoses.

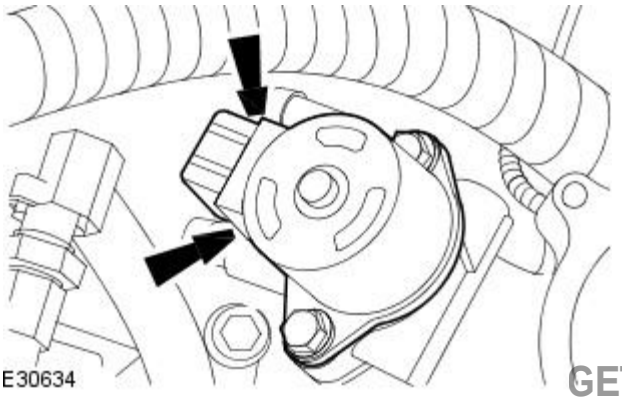


**55.** Remove the EGR valve and the exhaust manifold to EGR valve tube.

- Remove the retaining bolts.
- Remove and discard the exhaust manifold to EGR valve tube gasket.
- Remove and discard the EGR valve to air intake elbow gasket.

GETtheMANUALS.org

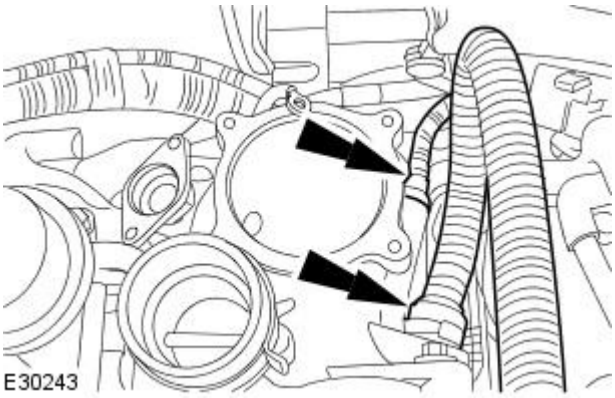


**56.** Disconnect the air intake elbow pipes.

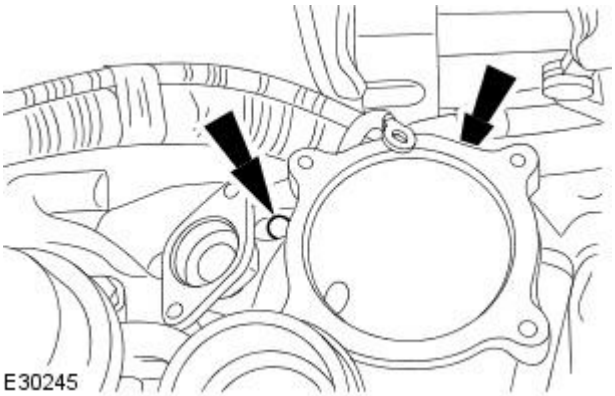


**57.** NOTE: Make sure correct location of the ground strap is noted.

Remove the air intake elbow retaining bracket lower retaining bolts.

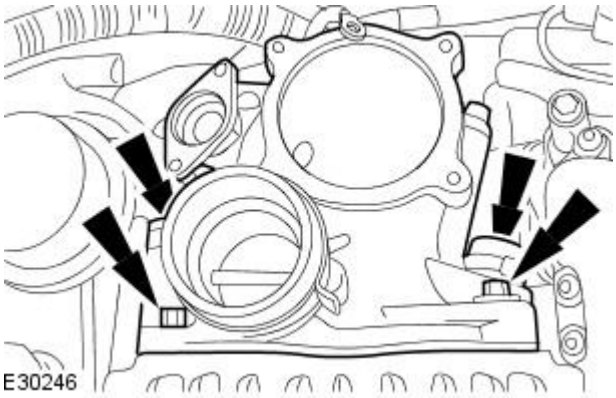


**58.** Detach the air intake elbow.

- Remove and discard the gasket.
- Remove and discard the retaining bolt seals.

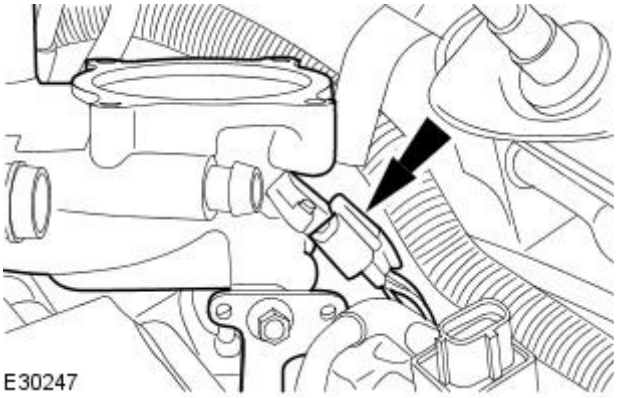


**59.** Remove the air intake elbow.

- Disconnect the manifold absolute pressure (MAP) sensor

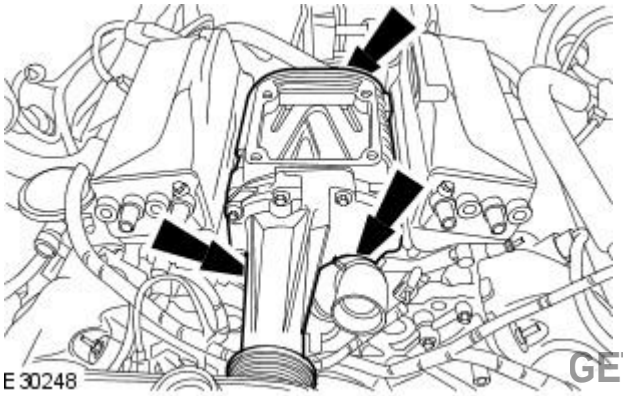


**60.** Remove the supercharger.

GETtheMANUALS.org

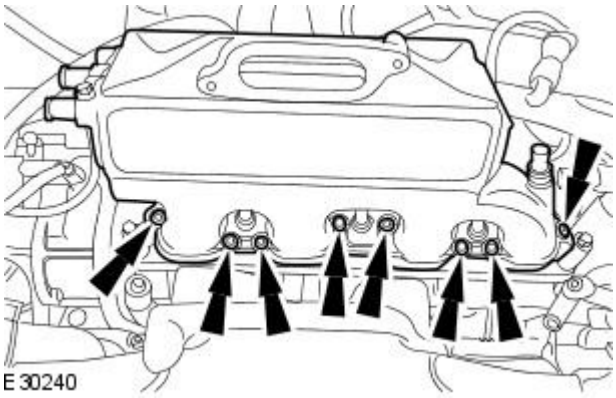


**61.** CAUTION: Make sure no foreign matter enters the cylinder head ports.

• NOTE: Right hand shown left hand similar

Remove the charge air coolers.

- Remove and discard the charge air cooler gasket.

All vehicles

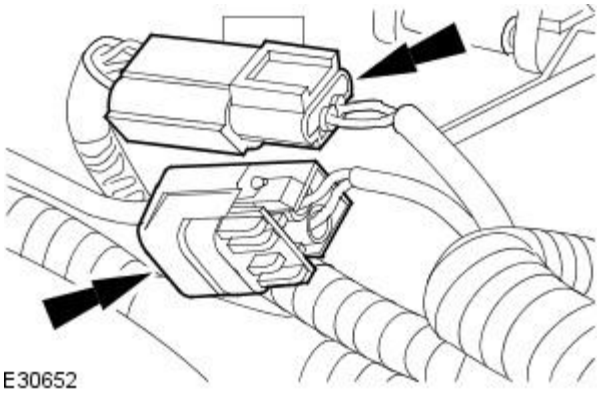


**62.** Disconnect the knock sensor electrical connectors.

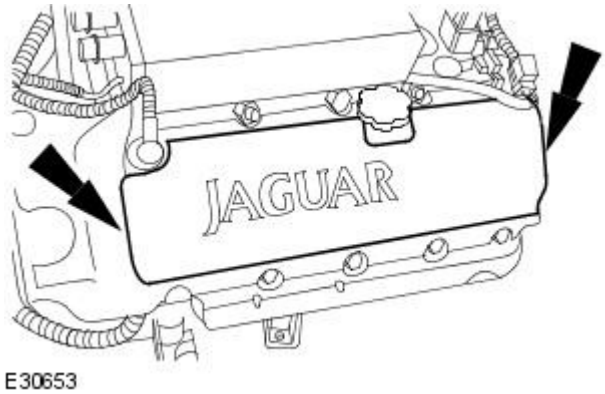


**63.** NOTE: Left-hand shown,right-hand similar.

Remove the ignition coil cover.

Vehicles without supercharger

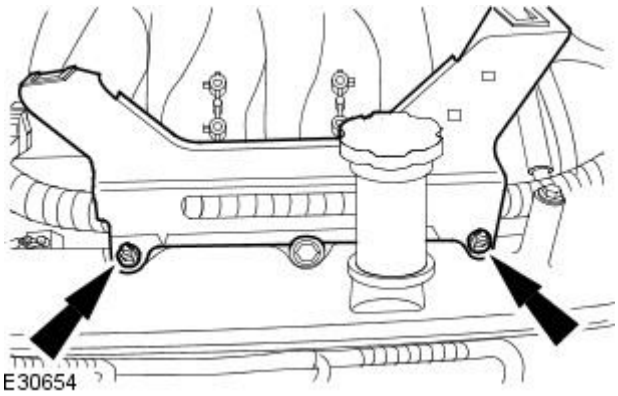


**64.** Remove the engine cover retaining bracket.

GETtheMANUALS.org

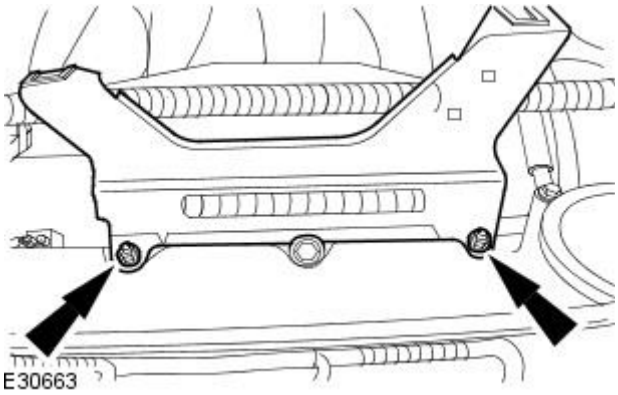


**65.** Remove the engine cover retaining bracket.

All vehicles

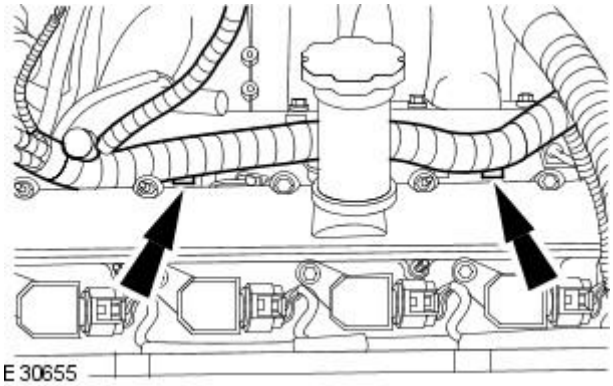


**66.** Detach the engine wiring harness.

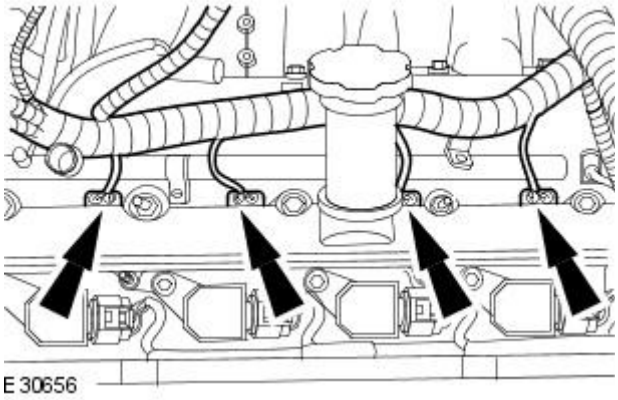


**67.** Disconnect the fuel injector electrical connectors.

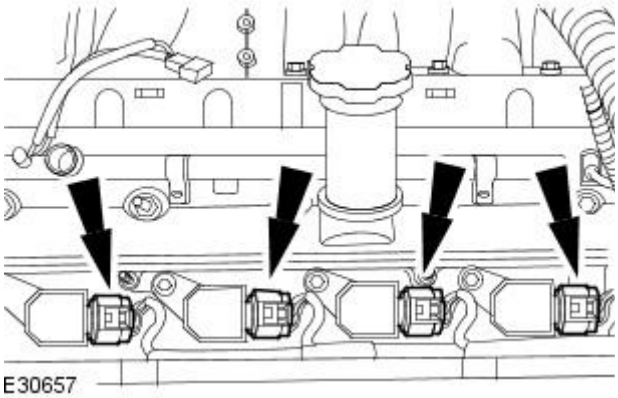


**68.** Disconnect the ignition coil electrical connectors.

GETtheMANUALS.org

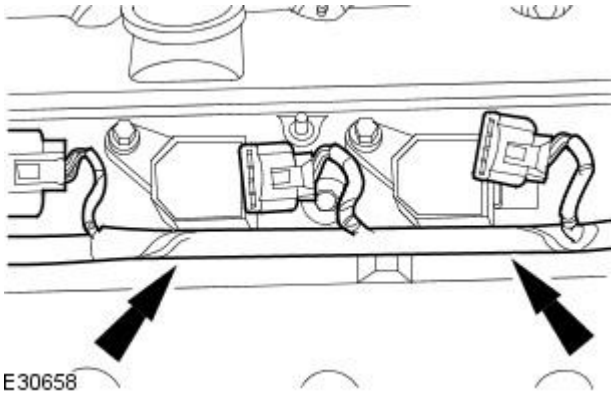


**69.** Detach the engine wiring harness.

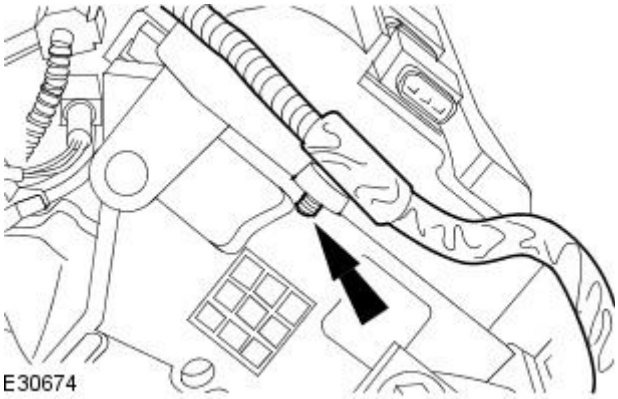


**70.** Detach the engine wiring harness.

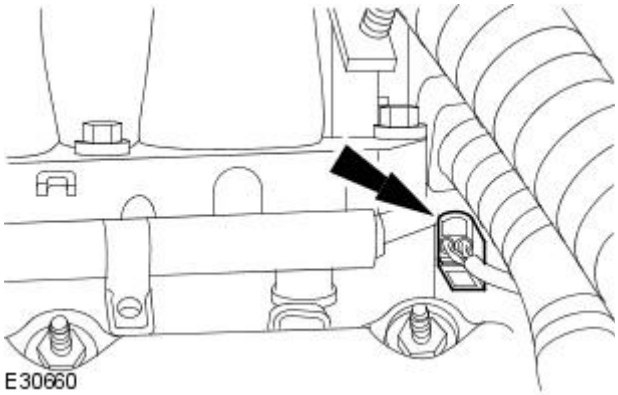


**71.** Disconnect the camshaft position sensor electrical connector.

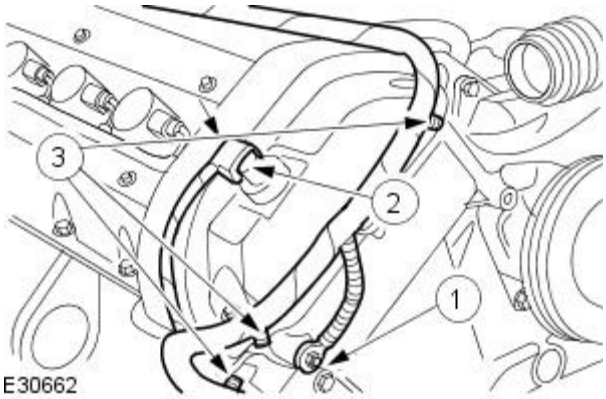


**72.** Detach the engine wiring harness.

1. Detach the ground cable.
2. Disconnect the variable valve timing (VCT) solenoid electrical connector.
3. Detach the engine wiring harness.

Vehicles without supercharger

GETtheMANUALS.org

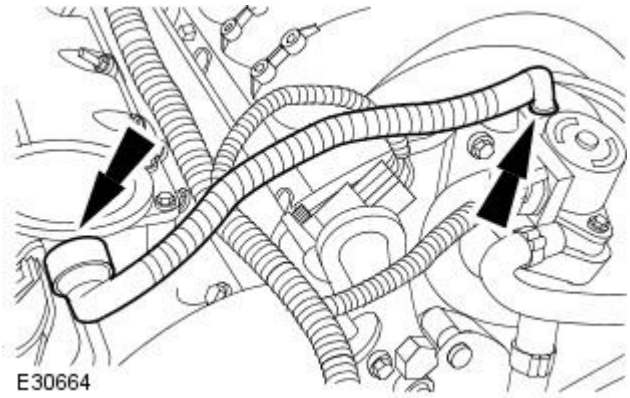


**73.** Disconnect the positive crankcase ventilation pipe.

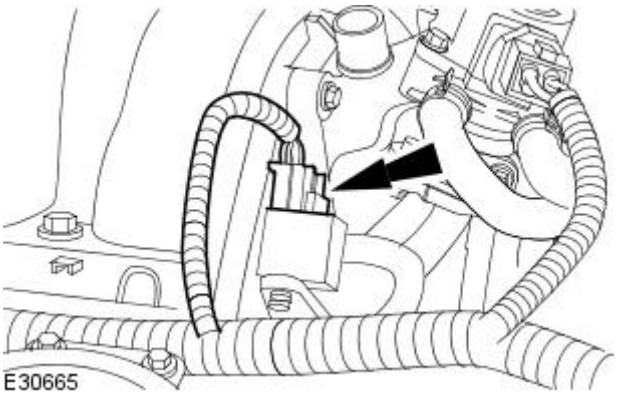


**74.** Disconnect the fuel pressure regulator electrical connector.

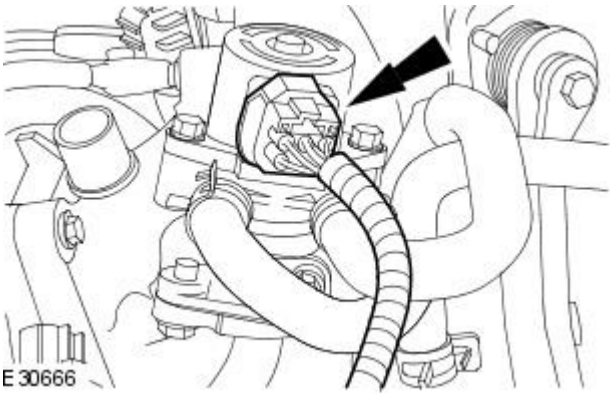


**75.** Disconnect the exhaust gas recirculation valve electrical connector.

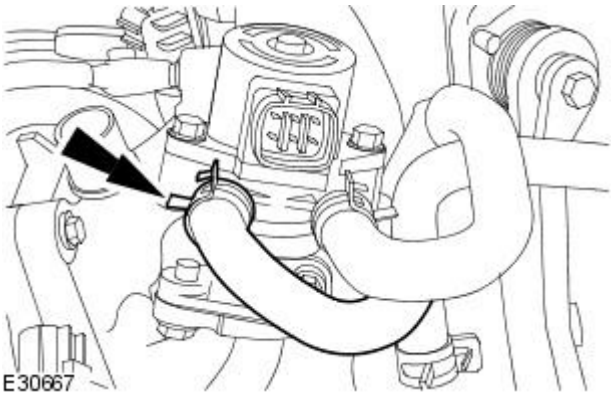


**76.** Disconnect the exhaust gas recirculation valve coolant hose.

All vehicles

GETtheMANUALS.org

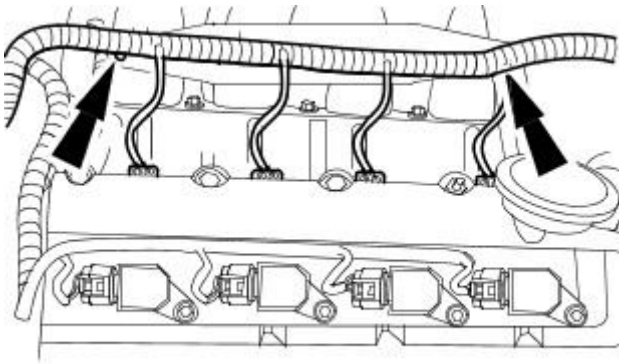


**77.** Detach the engine wiring harness.

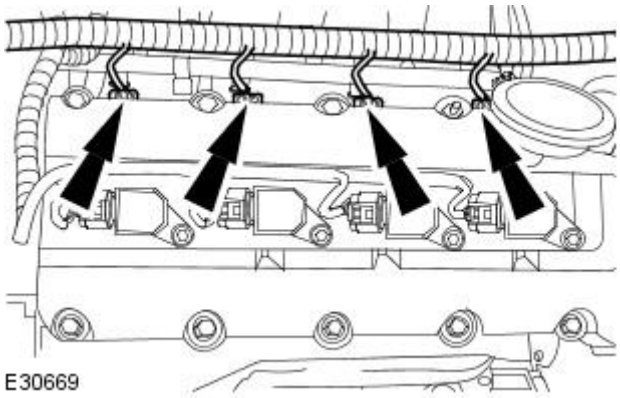


**78.** Disconnect the fuel injector electrical connectors.

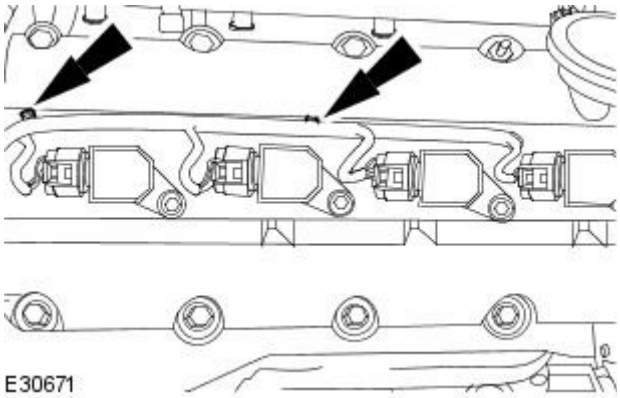


**79.** Detach the engine wiring harness.

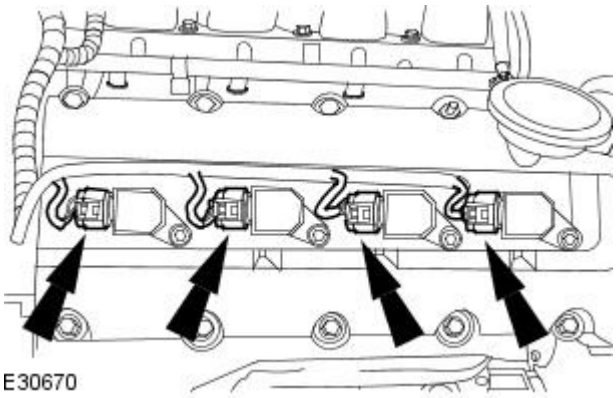


**80.** Disconnect the ignition coil electrical connectors.

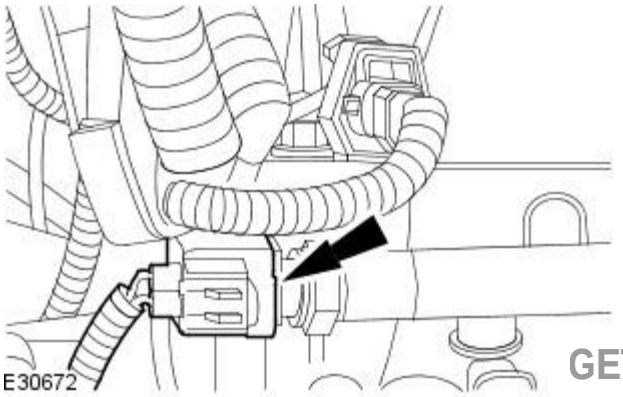


**81.** Disconnect the fuel temperature sensor electrical connector.

GETtheMANUALS.org

**82.** Disconnect the camshaft position sensor electrical connector.

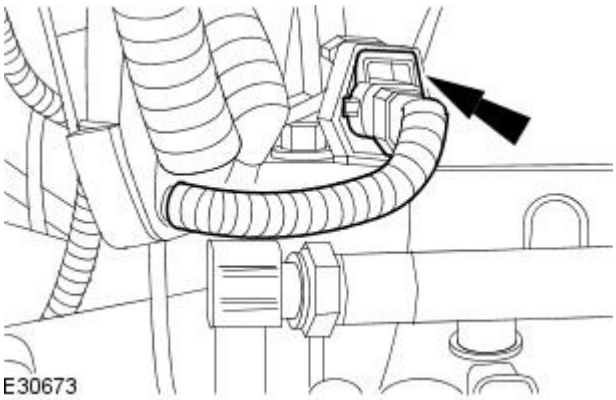


**83.** Detach the engine wiring harness

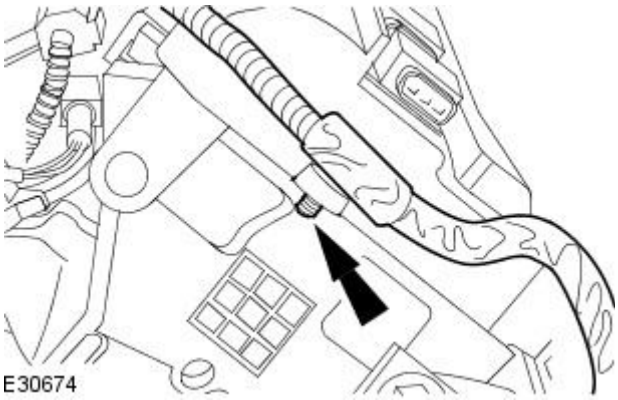


Vehicles without supercharger

**84.** Detach the engine wiring harness.

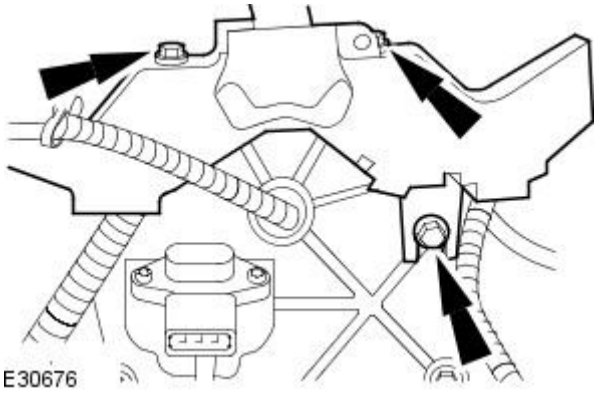


**85.** Remove the intake manifold.

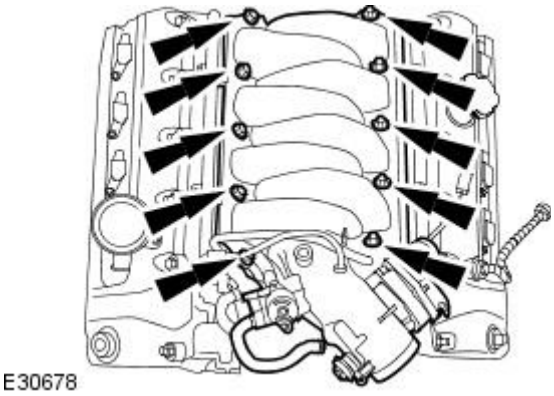


All vehicles

GETtheMANUALS.org

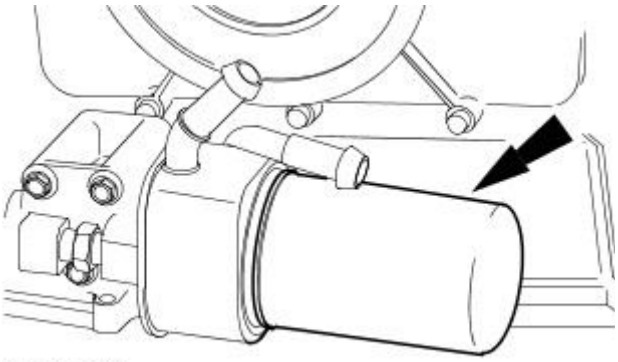

VUJ0001576

**86.** NOTE: Place a suitable container underneath filter to prevent oil spillage.

Remove the oil filter element.

Vehicles without supercharger

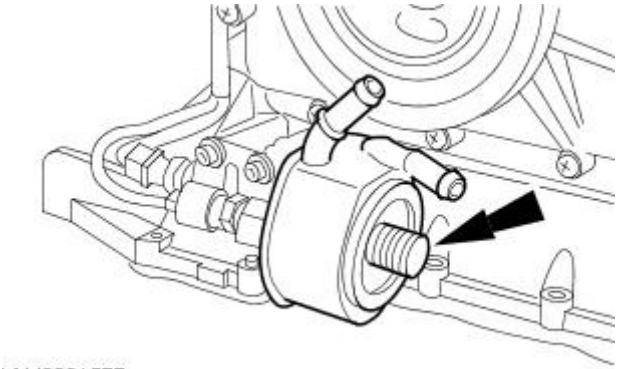

VUJ0001577

**87.** Remove the oil cooler.

All vehicles

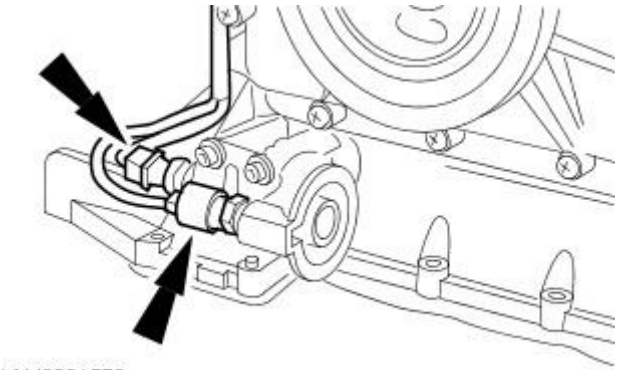

VUJ0001578

**88.** Disconnect the oil pressure switch and oil temperature sensor electrical connectors.

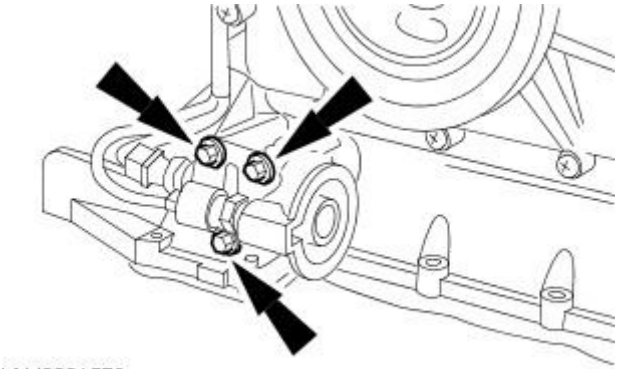

VUJ0001579

**89.** Remove the oil filter housing.

- Remove and discard the O-ring seal.

GETtheMANUALS.org

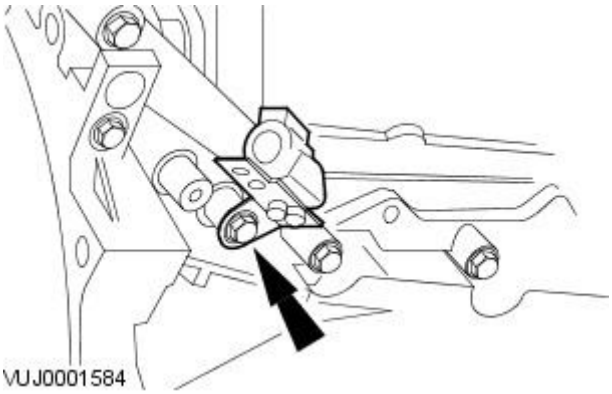


**90.** Detach the right-hand oxygen sensor.

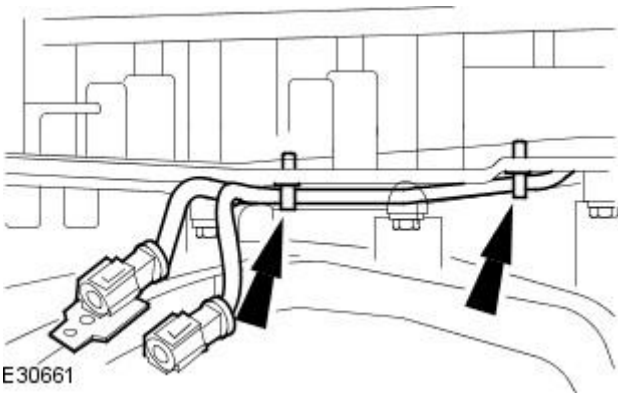


**91.** Detach the engine wiring harness retaining clips.

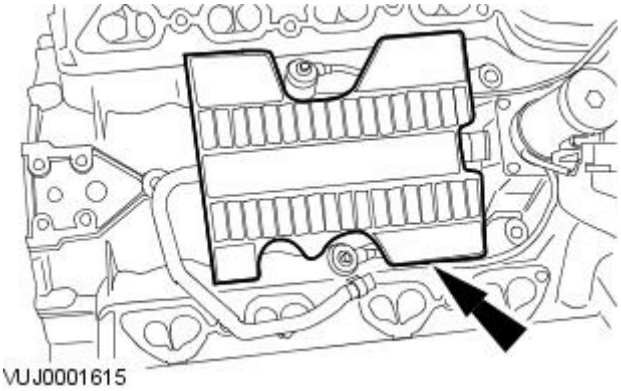


**92.** Remove the engine wiring harness

**93.** Remove the noise and vibration insulating pad.

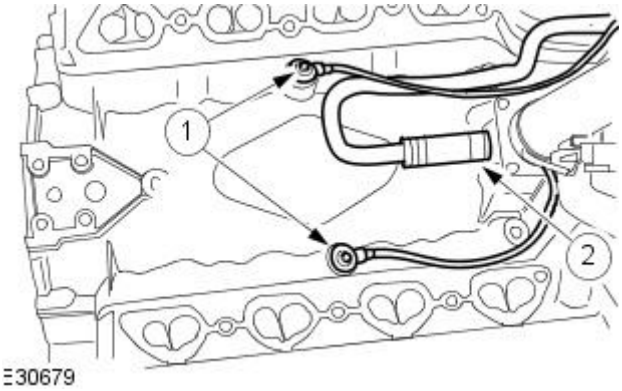


**94.** Remove the intake manifold heater coolant hose.

1. Remove the knock sensors.
2. Remove the intake manifold heater coolant hose.

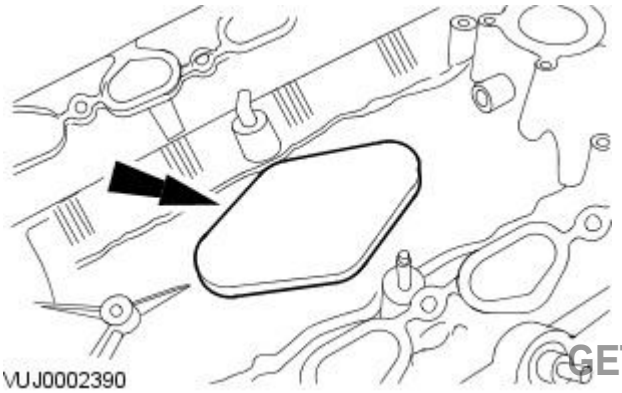


**95.** Remove the engine block insulation grommet.

GETtheMANUALS.org

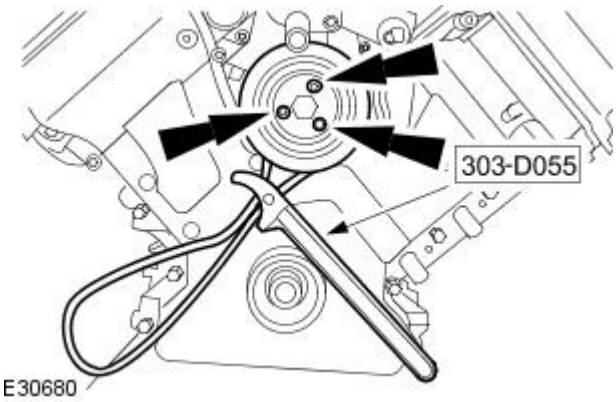


**96.** Remove the water pump pulley.

- Using special tool, retain the water pump pulley.

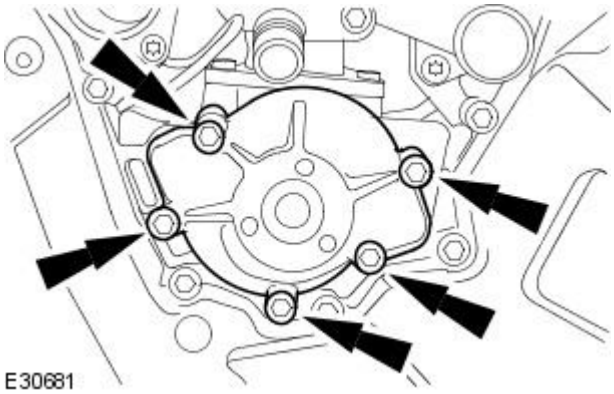


**97.** Remove the water pump.

- Remove and discard the gasket.
- Remove and discard the O-ring seal.

Vehicles without supercharger

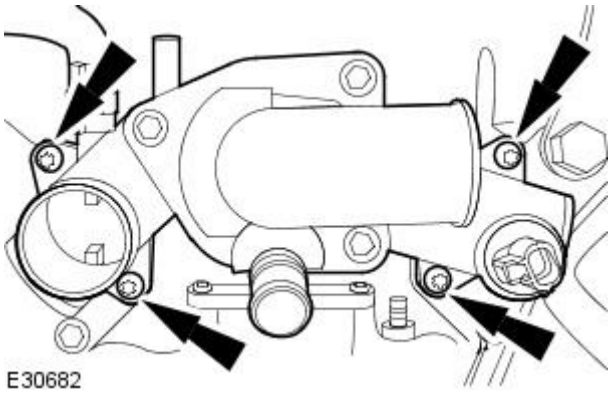


**98.** Remove the thermostat housing.

- Remove and discard the O-ring seals.

All vehicles

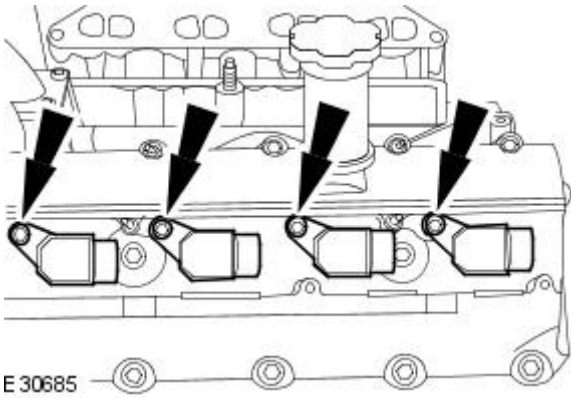


**99.** NOTE: Left-hand shown, right-hand similar

Remove the ignition coils.

**100.** Remove the spark plugs.

GETtheMANUALS.org

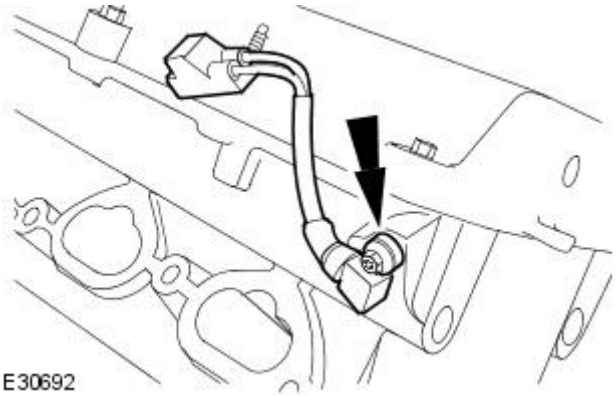


**101.** Remove the right-hand camshaft position (CMP) sensor.

- Remove and discard the O-ring seal.

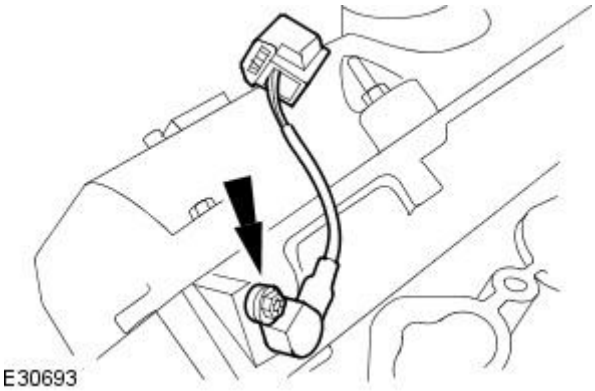


**102.** Remove the left-hand camshaft position (CMP) sensor.

- Remove and discard the O-ring seal.

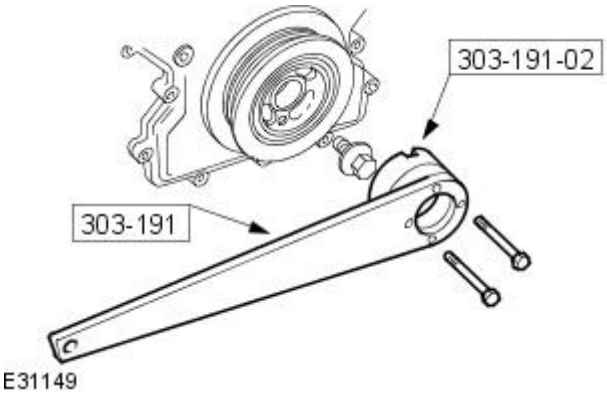


**103.** CAUTION: Under no circumstances should the crankshaft setting peg 303645 be used in the following operations to lock the crankshaft.

• NOTE: The crankshaft retaining bolt will be very tight.

Using special tools, retain the crankshaft pulley.

- Remove and discard the crankshaft pulley bolt.

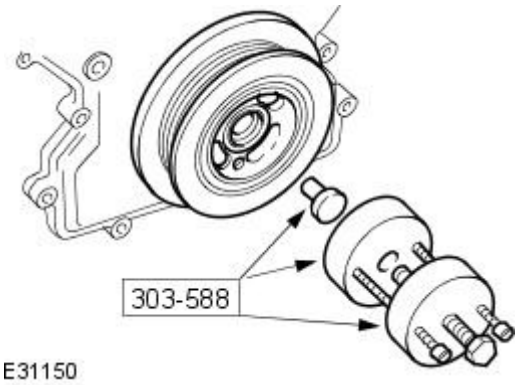


**104.** Remove the special tools.

**105.** NOTE: The crankshaft pulley will be very tight.

Using special tools, remove the crankshaft pulley.

- Collect the locking ring.
- Remove and discard the O-ring seal.

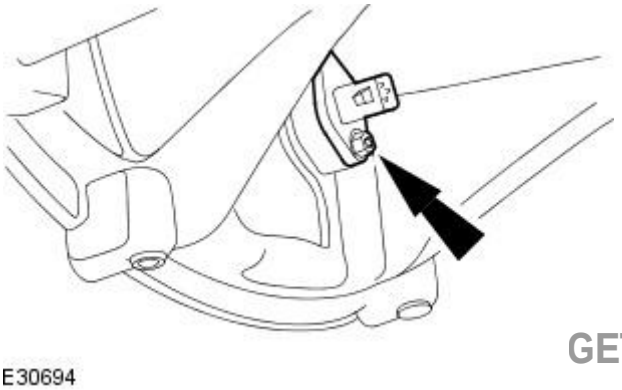


**106.** Remove the crankshaft position (CKP) sensor.

GETtheMANUALS.org

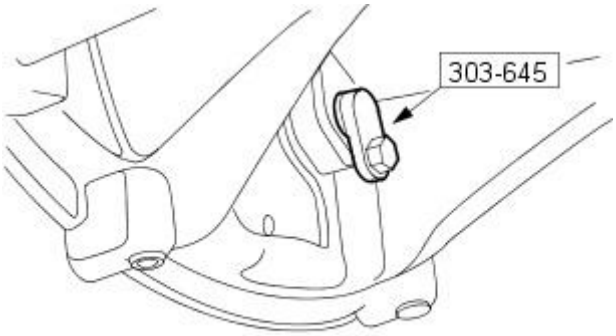


VUJ0002400

**107.** CAUTIONS:

Make sure the spark plugs are removed to enable the engine to rotate freely.

Do not rotate the crankshaft counterclockwise. The timing chains may bind causing engine damage.

Rotate the crankshaft clockwise to position the engine to top dead center (TDC) No. 1 cylinder

Install the special tool 303-645.

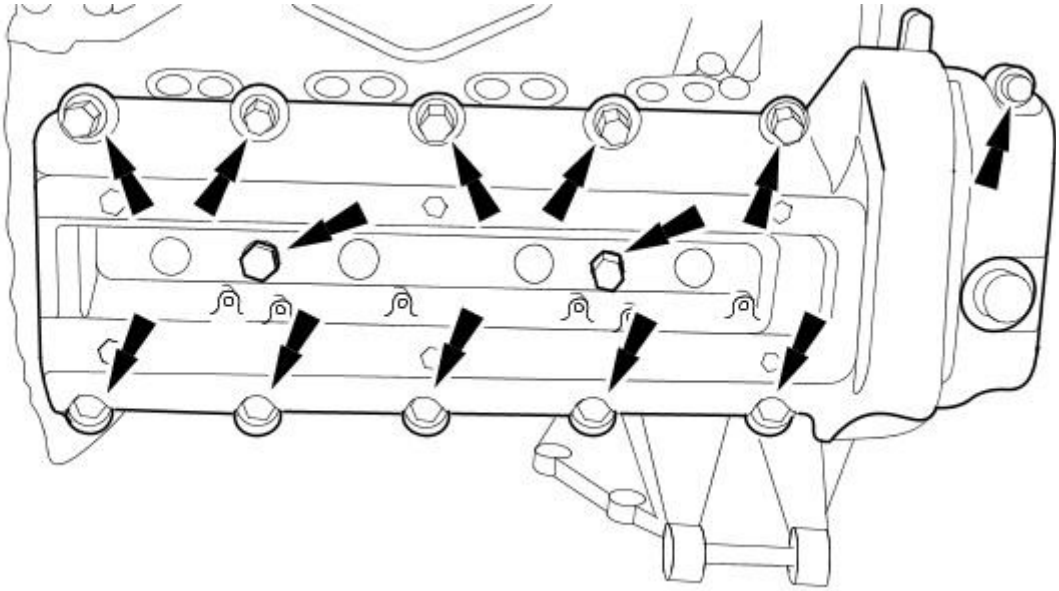

VUJ0002395

**108.** Remove the right-hand valve cover.

- Discard the valve cover gaskets.

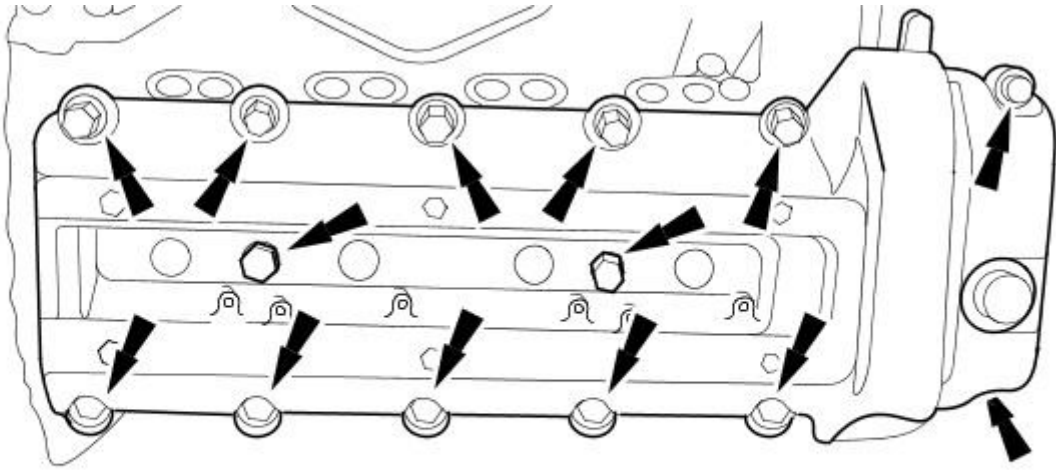

E30696

**109.** Remove the left-hand valve cover.

- Discard the valve cover gaskets.

**110.** Remove the engine front cover.

GETtheMANUALS.org

VUJ0002398

Vehicles without supercharger

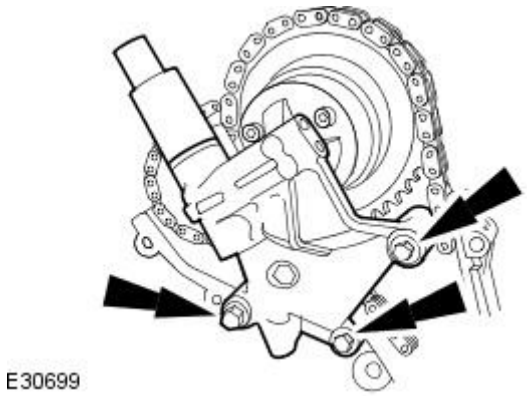

E30699

**111.** Remove the right-hand variable camshaft timing oil control unit housing.

- Remove and discard the O-ring seals.

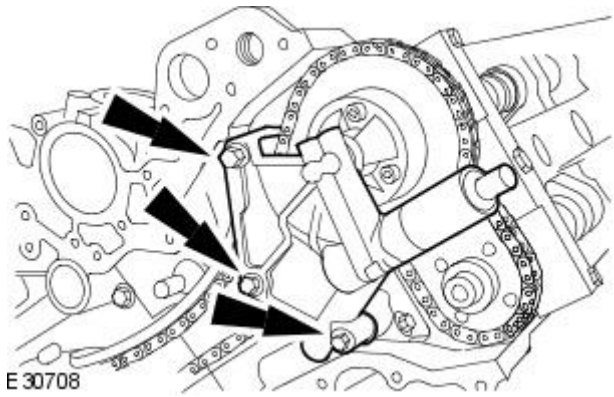

E30708

**112.** Remove the left-hand variable camshaft timing oil control unit housing.

- Remove and discard the O-ring seals.

All vehicles

GETtheMANUALS.org

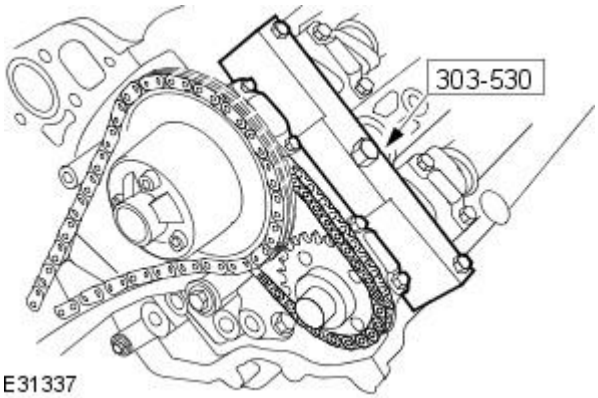

E31337

**113.** Install the special tool to the left-hand cylinder head.

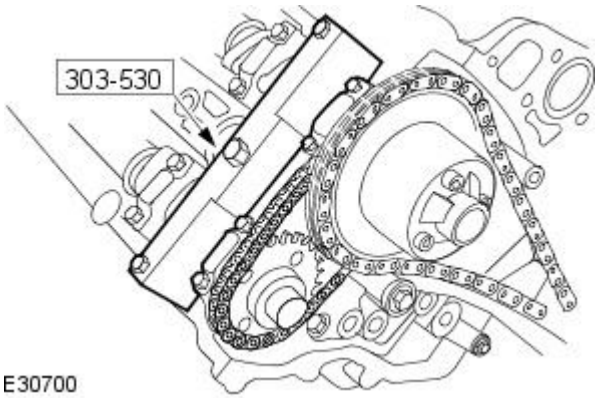

E30700

**114.** Install the special tool to the Right-hand cylinder head.

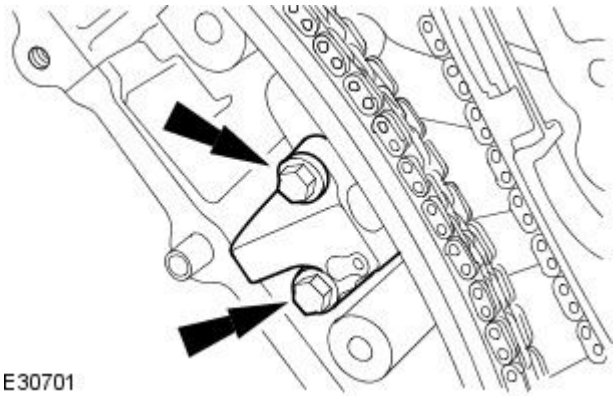
E30701

**115.** Remove the primary timing chain tensioner assembly.

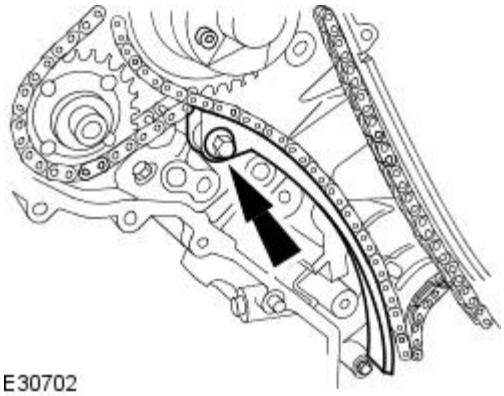
E30702

**116.** Remove the primary timing chain tensioner guide.

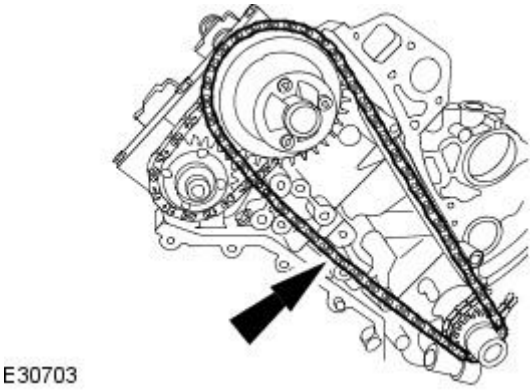
E30703

**117.** Remove the primary timing chain.

GETtheMANUALS.org

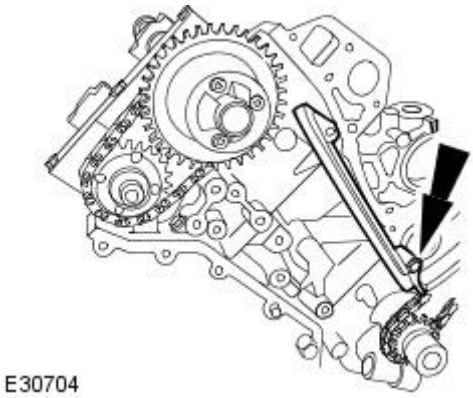


**118.** Remove the primary timing chain guide.

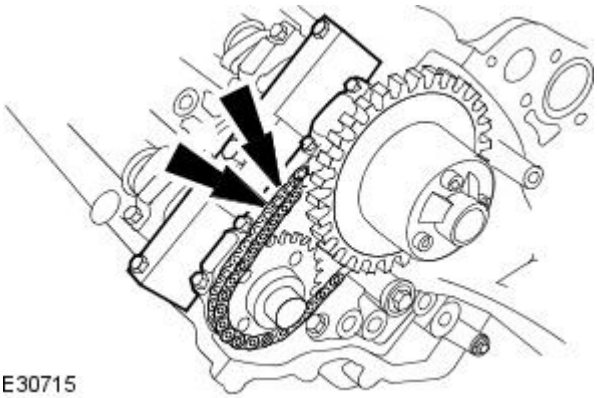


**119.** Remove the secondary timing chain tensioner retaining bolts.

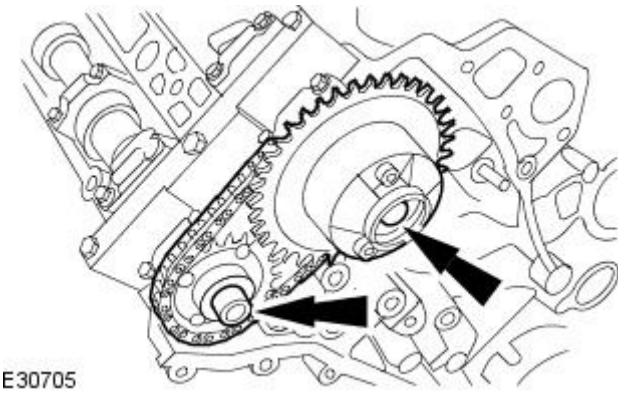


**120.** Remove the camshaft sprockets.

- Remove the secondary timing chain tensioner and secondary timing chain from the camshaft sprockets.

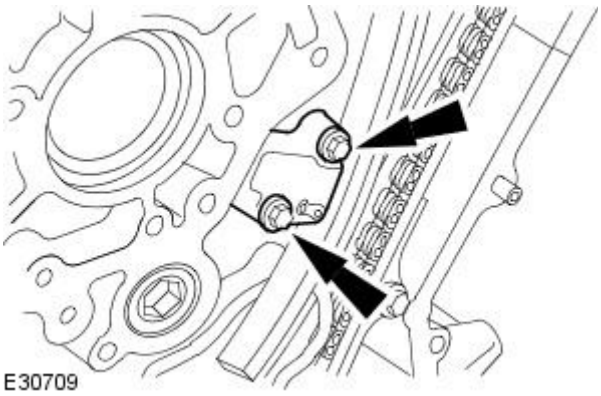


**121.** Remove the primary timing chain tensioner assembly.

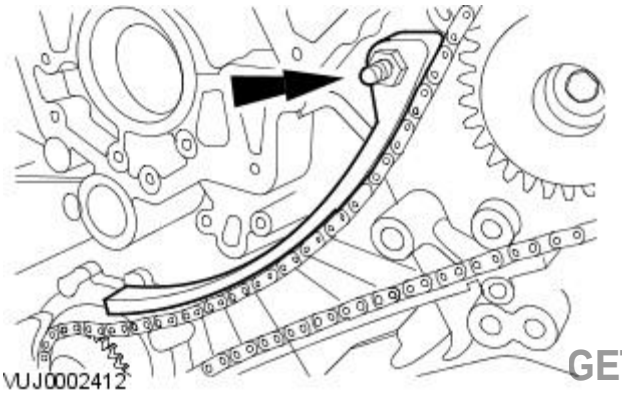


**122.** Remove the primary timing chain tensioner guide.

GETtheMANUALS.org

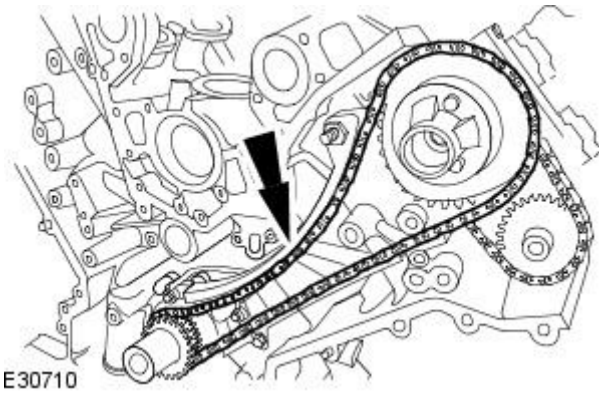


**123.** Remove the primary timing chain.

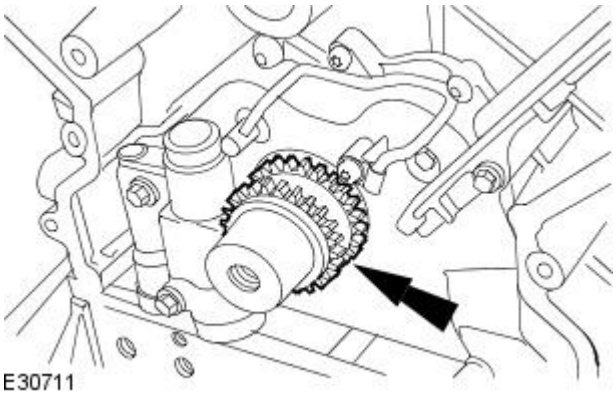


**124.** Remove the crankshaft sprocket.

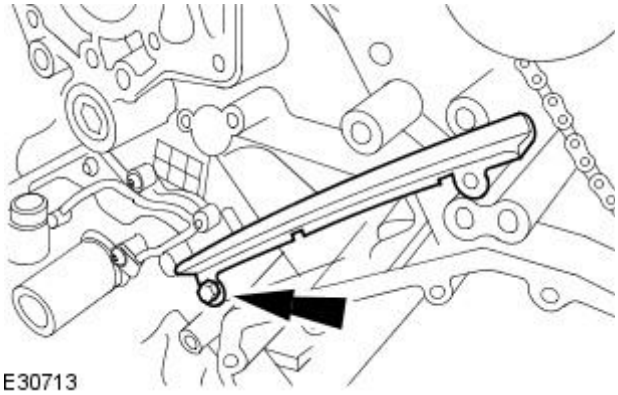


**125.** Remove the primary timing chain tensioner guide.

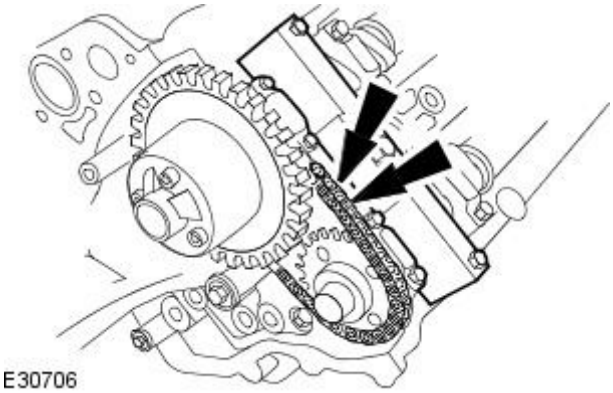


**126.** Remove the secondary timing chain tensioner retaining bolts.

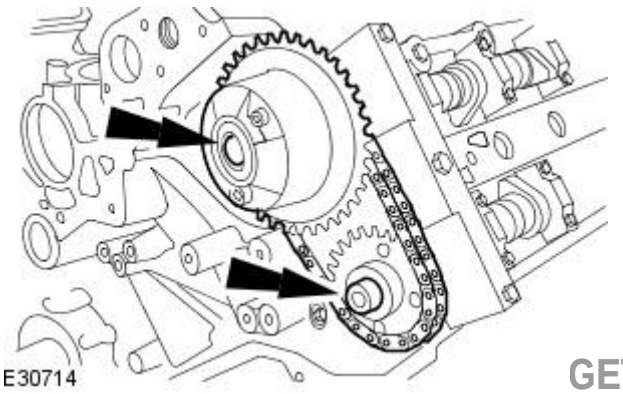


**127.** Remove the camshaft sprockets.

- Remove the secondary timing chain tensioner and secondary timing chain from the camshaft sprockets.

GETtheMANUALS.org

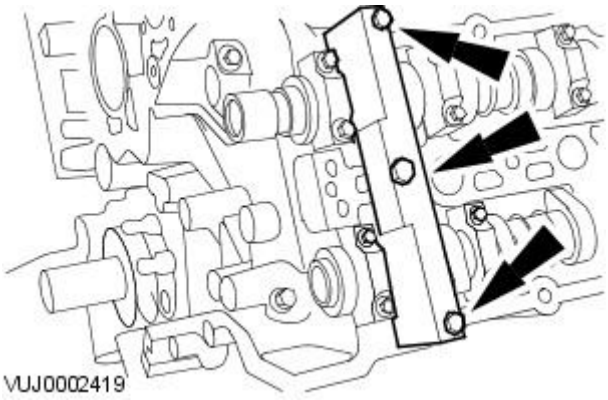


**128.** Remove the camshaft setting tool.

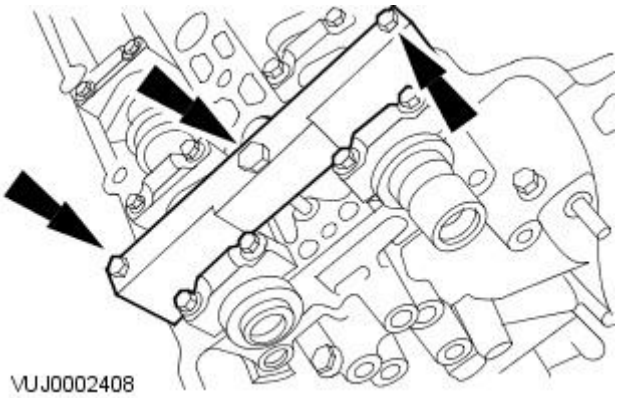


**129.** Remove the camshaft setting tool.

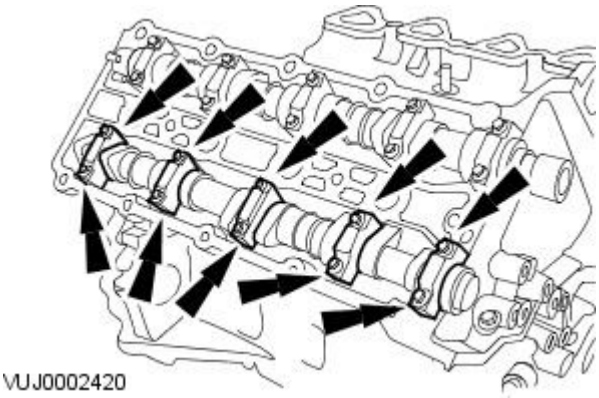


**130.** Remove the camshaft bearing caps.

- Remove the camshaft bearing cap retaining bolts evenly and in stages.
- Remove the camshaft bearing caps. Note their orientation and markings, each is marked with its position (a number) and orientation (an arrow).

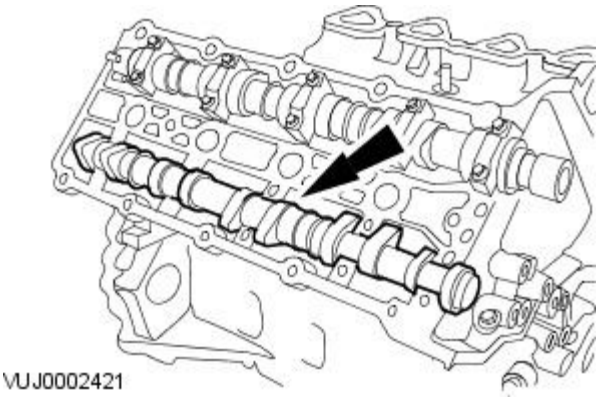


**131.** Remove the right-hand exhaust camshaft.

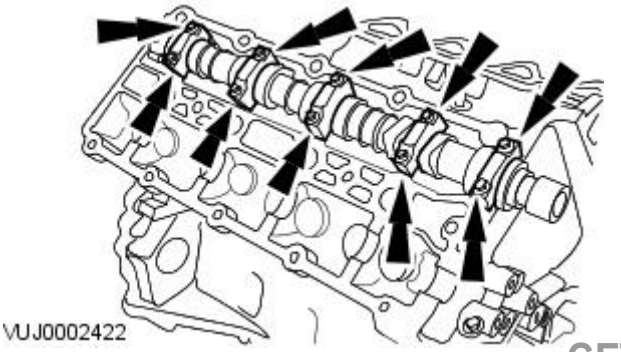


**132.** Remove the camshaft bearing caps.

- Remove the camshaft bearing cap retaining bolts evenly and in stages.
- Remove the camshaft bearing caps. Note their orientation and markings, each is marked with its position (a number) and orientation (an arrow).

GETtheMANUALS.org

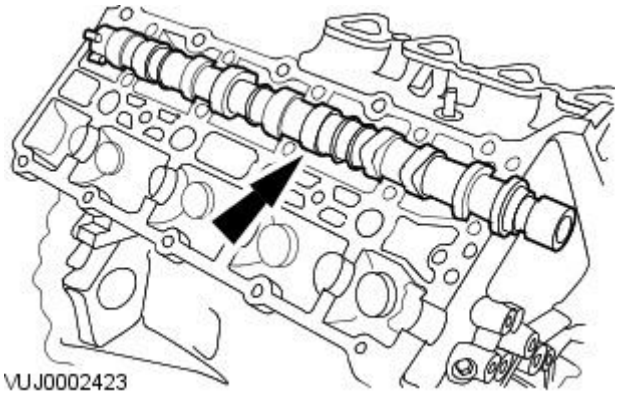


**133.** Remove the right-hand intake camshaft.

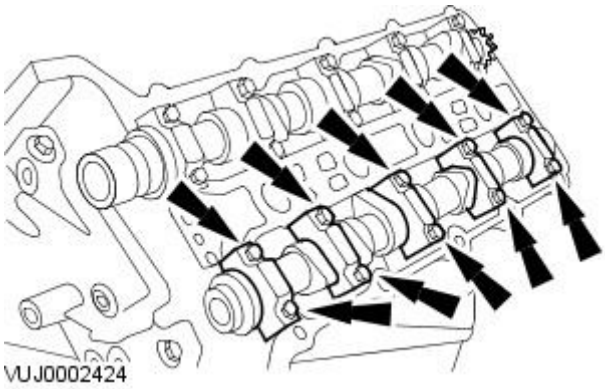


**134.** Remove the camshaft bearing caps.

- Remove the camshaft bearing cap retaining bolts evenly and in stages.
- Remove the camshaft bearing caps. Note their orientation and markings, each is marked with its position (a number) and orientation (an arrow).

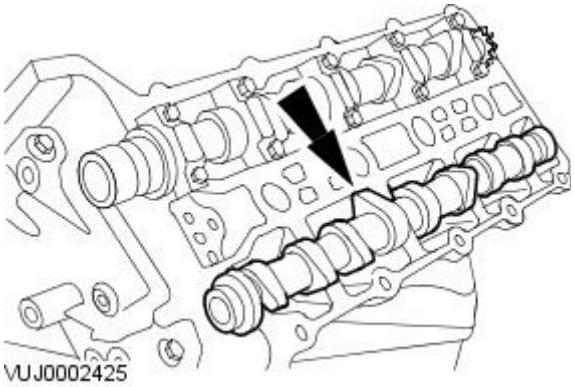


**135.** Remove the left-hand exhaust camshaft.

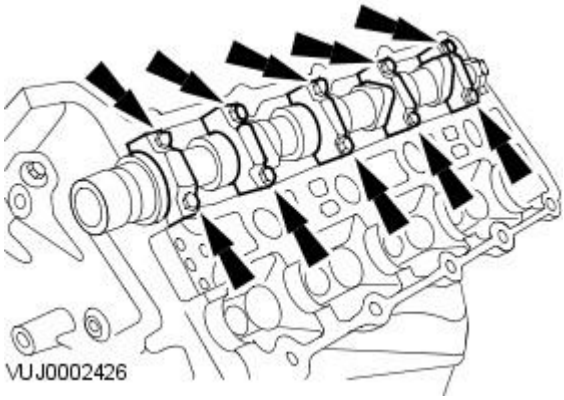


**136.** Remove the camshaft bearing caps.

- Remove the camshaft bearing cap retaining bolts evenly and in stages.
- Remove the camshaft bearing caps. Note their orientation and markings, each is marked with its position (a number) and orientation (an arrow).

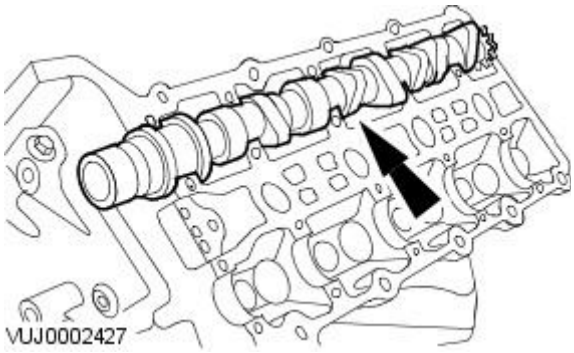


**137.** Remove the left-hand inlet camshaft.

GETtheMANUALS.org

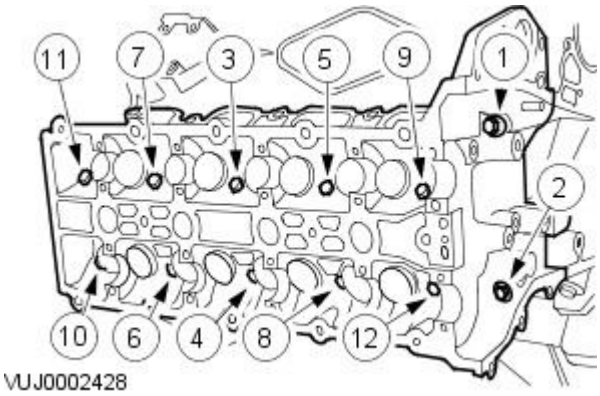

VUJ0002428

**138.** CAUTIONS:

The bolts can only be used twice, mark the bolts with a center punch. If two punch marks are visible, discard the bolts.

Vehicles fitted with Polydrive cylinder head bolts, the cylinder head bolts must be removed using a 10 mm Polydrive socket or a 10 mm Allen key. Failure to follow this instruction may result in damage to the component.

Remove the right-hand cylinder head.

- Remove the bolts in the indicated sequence.
- Remove and discard the gasket.

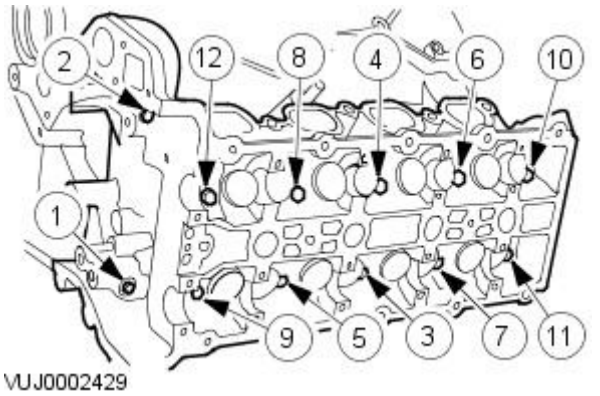

VUJ0002429

**139.** CAUTIONS:

The bolts can only be used twice, mark the bolts with a center punch. If two punch marks are visible, discard the bolts.

Vehicles fitted with Polydrive cylinder head bolts, the cylinder head bolts must be removed using a 10 mm Polydrive socket or a 10 mm Allen key. Failure to follow this instruction may result in damage to the component.

Remove the left-hand cylinder head.

- Remove the bolts in the indicated sequence.
- Remove and discard the gasket.

**140.** Remove the crankshaft setting peg 303645 from the crankshaft position sensor location.

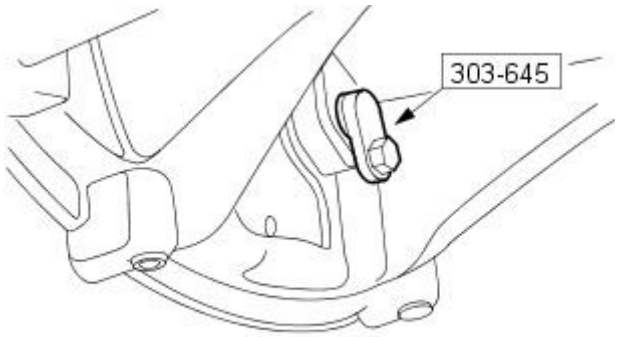

VUJ0002400

**141.** Remove the drive plate.

1. Remove the drive plate retaining bolts.
2. Remove the drive plate.

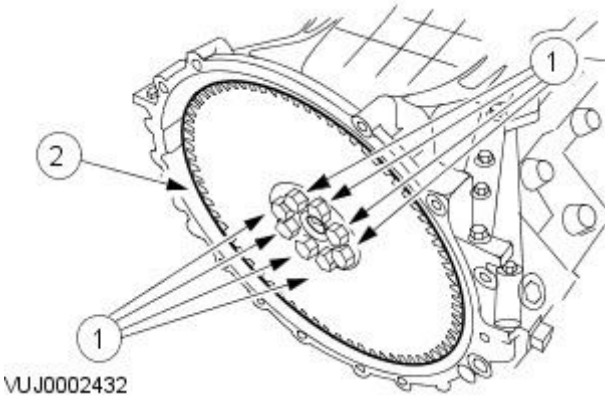

VUJ0002432

GETtheMANUALS.org

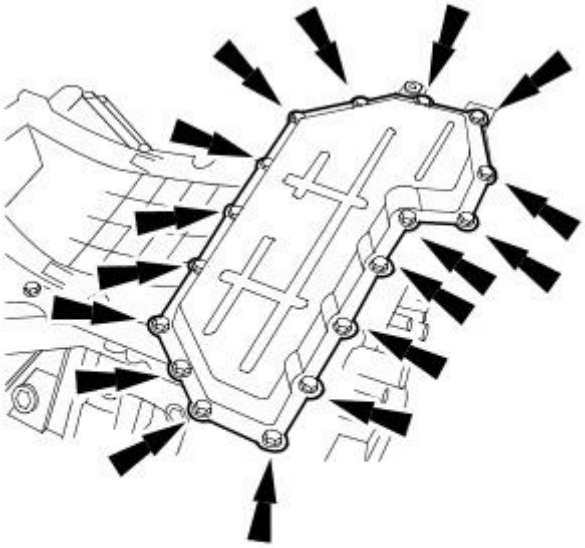

VUJ0002433

**142.** Remove the lower oil pan.

- Remove and discard the gasket.

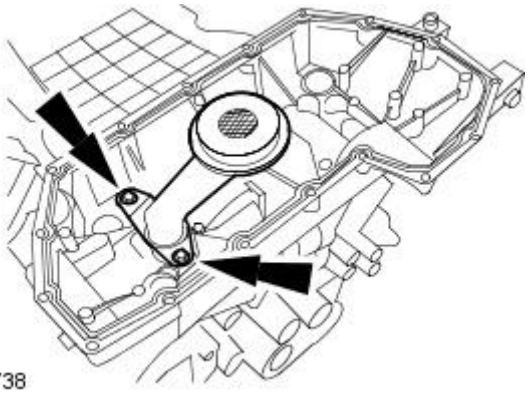

E30738

**143.** Remove the oil strainer.

- Remove and discard the O-ring seal.

**144.** Remove the upper oil pan.

- Remove and discard the gasket.

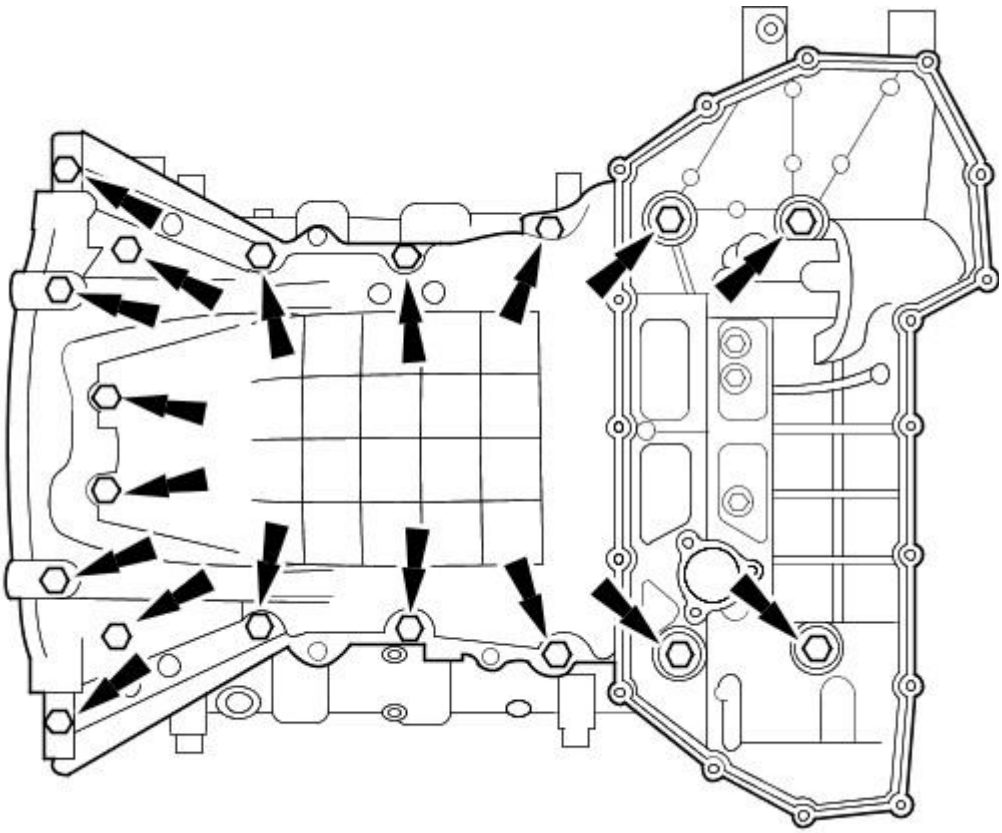

VUJ0002435

GETtheMANUALS.org

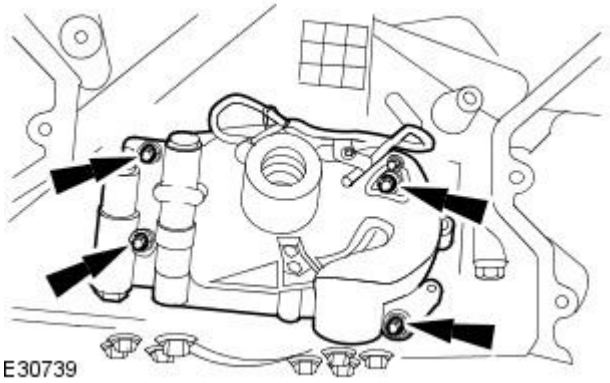


**145.** Remove the oil pump.

- Remove and discard the gasket.

**146.** Inspect the tops of the cylinder bores. As necessary remove ridge and carbon build up from each cylinder.

Vehicles with supercharger

**147.** Remove the piston cooling jets.

All vehicles

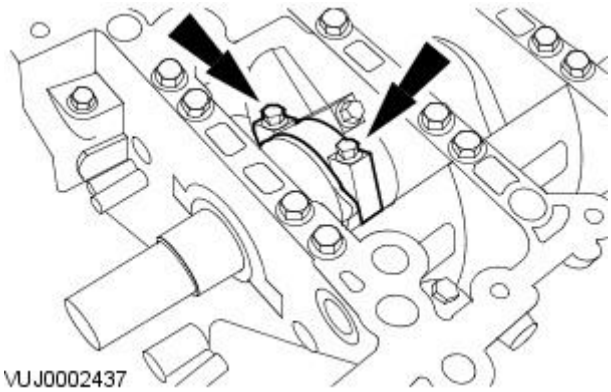


**148.** CAUTION: Pistons, connecting rods and connecting rod bearings should be numbered to make sure they are reassembled in the same position.

• NOTE: Mark the position of the connecting rod caps to the connecting rods to make sure of correct installation.

• NOTE: Discard the connecting rod bolts after removal.

Remove the connecting rod bolts, the connecting rod caps and the lower connecting rod bearings.

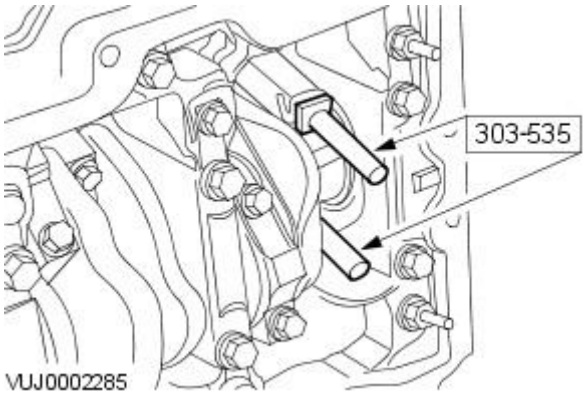


**149.** CAUTION: Use appropriate protection to prevent damage to the crankshaft bearing journals and cylinder bore surfaces.

Install special tools to the connecting rods.

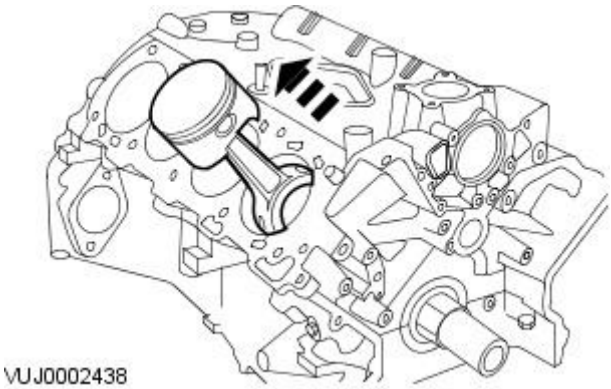


**150.** CAUTION: Care should be taken not to damage the connecting rod and cap joint face surfaces or possible engine damage may occur. Avoid contaminating the fractured joint surfaces with dirt or grease.

• NOTE: Attach the connecting rods and caps after removal to avoid mismatch.

Remove the pistons.

- Rotate the crankshaft to locate pistons at the bottom of travel.
- Push the piston, connecting rod and upper bearing through the top of the cylinder.

**151.** NOTE: Remove the lower cylinder block bolts in the indicated sequence.

• NOTE: Mark the position of the upper and lower crankshaft main bearings for reassembly.

Remove the lower cylinder block.

GETtheMANUALS.org

- Remove the lower cylinder block retaining bolts in the indicated sequence.

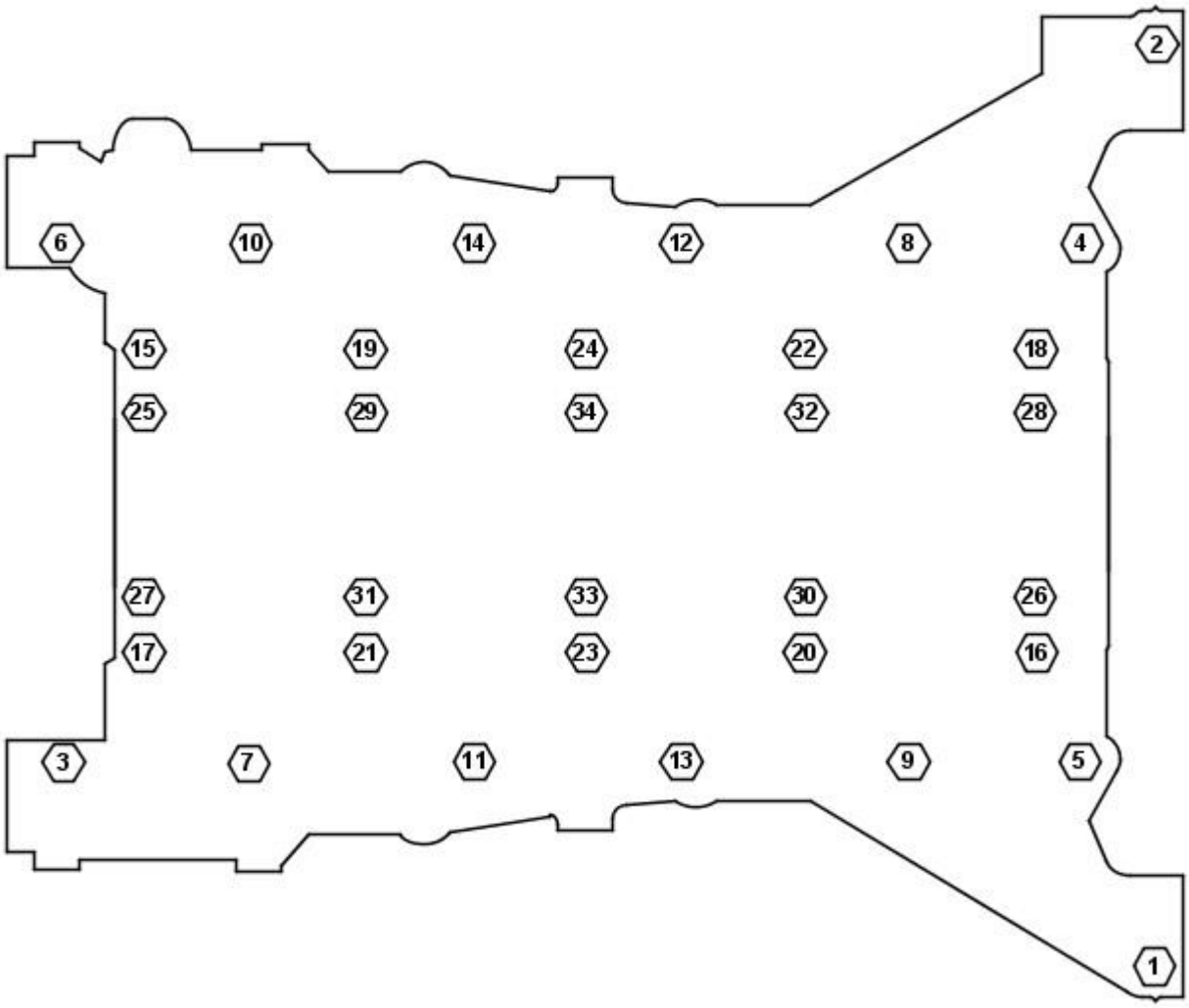


VUJ0002439

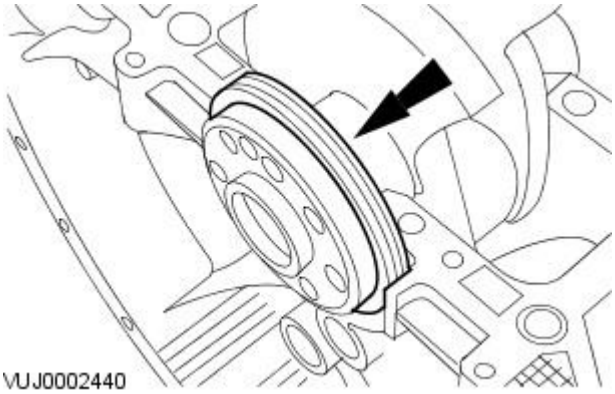

VUJ0002440

**152.** Discard the crankshaft rear main oil seal.

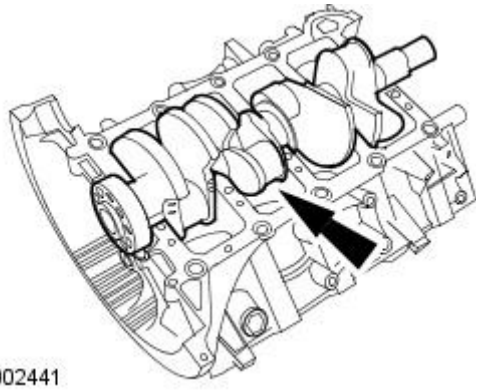

VUJ0002441

**153.** CAUTION: Avoid damage to any crankshaft bearing surfaces.

• NOTE: Never remove any pipe plugs or dowels unless they are to be newly installed or the cylinder block is to be washed.

Remove the crankshaft.

GETtheMANUALS.org

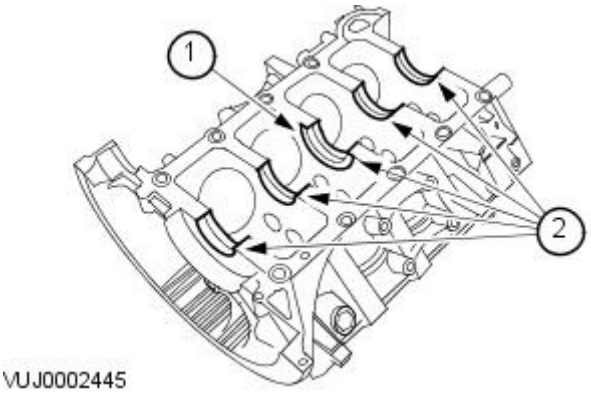


**154.** Remove the upper crankshaft main bearings.

1. Remove the upper crankshaft thrust washers.
2. Remove the upper crankshaft main bearings.

**155.** Clean the cylinder block with a soap and water solution. Dry the cylinder block completely with compressed air.

GETtheMANUALS.org

# Engine - V8 4.2L Petrol/V8 S/C 4.2L Petrol - Cylinder Head

Disassembly and Assembly of Subassemblies

| Special Tool(s) | |
|---|---|
| 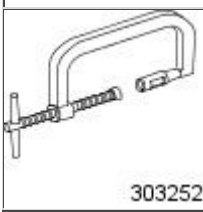 303252 | Valve Spring Compressor<br><br>303-252 |

## Disassembly

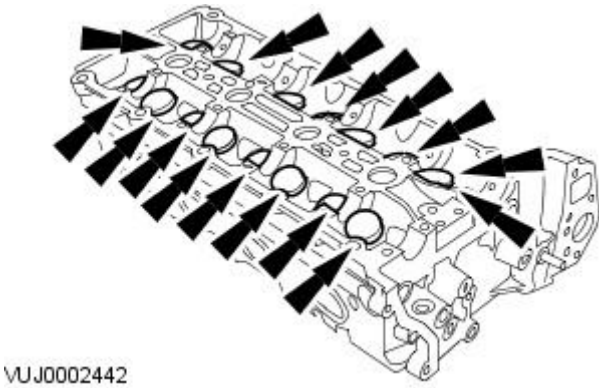
VUJ0002442

**1.** CAUTIONS:

Do not use a magnet to remove shims. Failure to follow these instructions may result in damage to the vehicle.

If the cylinder head valve components are to be reused, mark the position of the valve components to make sure they are reassembled in the same position.

Remove the bucket tappet and shim assemblies.

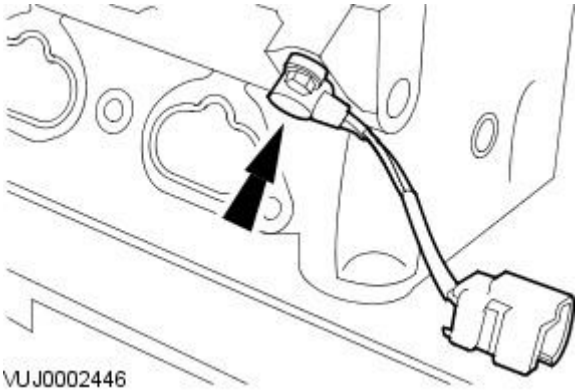
VUJ0002446

**2.** Remove the camshaft position (CMP) sensor.

- Remove and discard the 'O' ring seal.

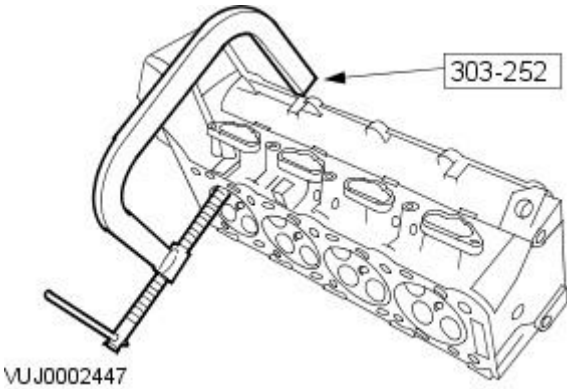

VUJ0002447

**3.** Using the special tool, compress the valve springs.

- Remove the valve collets.

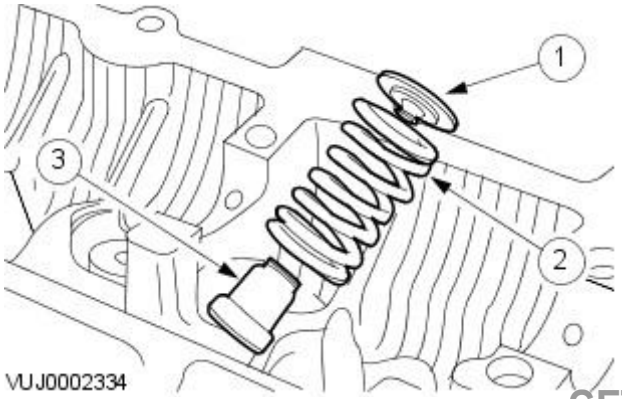

VUJ0002334

**4.** Remove the valve spring retainers and valve springs.

1. Remove the valve spring retainers.
2. Remove the valve springs.
3. Remove the valve stem oil seals.

GETtheMANUALS.org

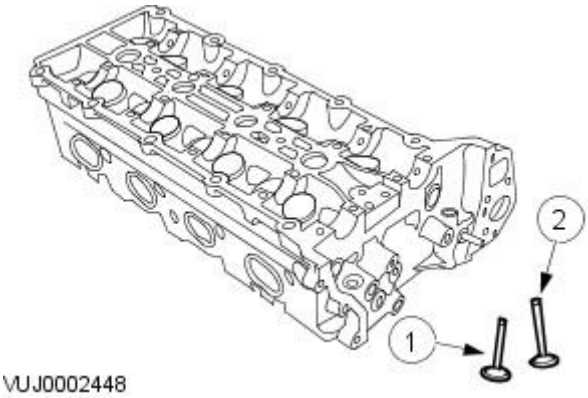


**5.** Remove the valves from the cylinder head.

1. Remove the intake valves.
2. Remove the exhaust valves.

**6.** Inspect the cylinder heads and related components. For additional information, refer to Section 303-00 Engine System - General Information

**7.** Remove the pipe plugs and alignment dowels as necessary to clean the cylinder heads.

## Assembly

**1.** WARNING: Eye protection is required during use of compressed air. Failure to follow these instructions may result in personal injury.

CAUTION: The cylinder head surface finish is measured in microns. For correct head gasket sealing, avoid any contact of finish with metallic objects.

Clean gasket material, dirt and foreign material from cylinder heads. Wash with a suitable soap and water solution and dry the cylinder head completely using compressed air if pipe plugs have been removed.

**2.** Install the pipe plugs and alignment dowels to cylinder heads.

- Apply pipe sealant to plugs prior to installation.

**3.** NOTE: Lubricate the valve stems before assembly.

Install the valves into the cylinder heads.

1. Install the intake valves.
2. Install the exhaust valves.

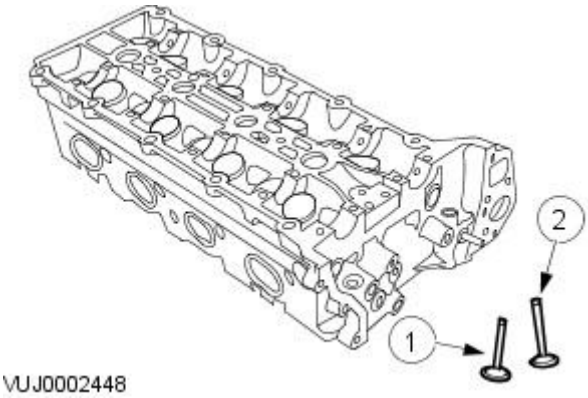


**4.** Install the valve spring retainers and valve springs.

1. Install the valve stem oil seals.
2. Install the valve springs.
3. Install the valve spring retainers.

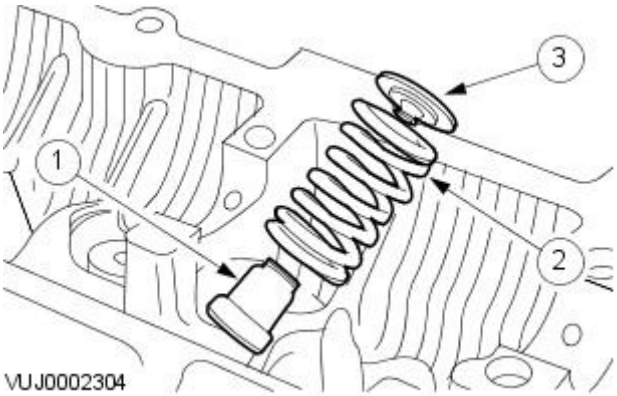


GETtheMANUALS.org

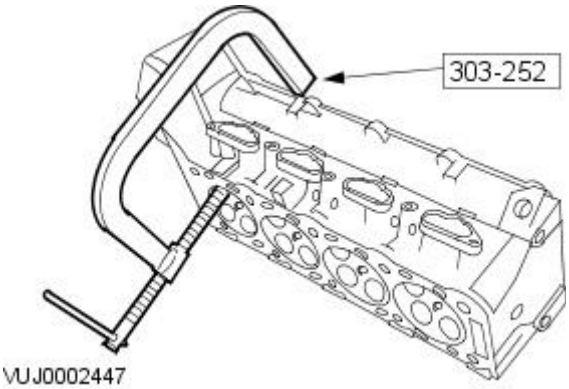


**5.** Using the special tool, compress the valve springs.

- Install the valve collets.

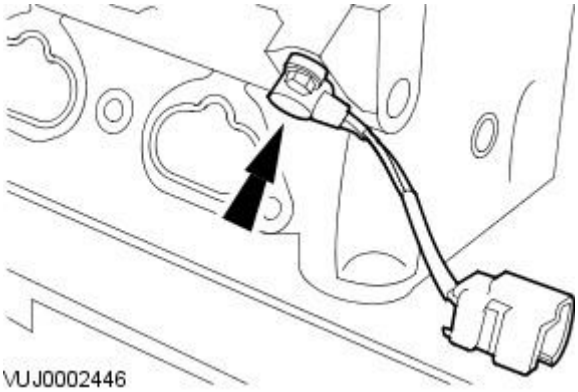


**6.** Install the camshaft position (CMP) sensor.

- Install a new 'O' ring seal.
- Tighten to 7 Nm.

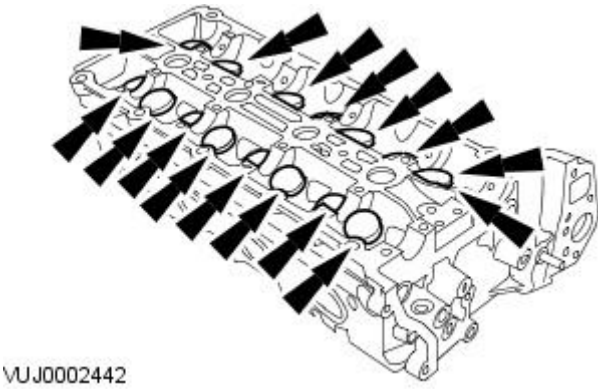


**7.** CAUTION: Do not use a magnet to install shims. Failure to follow these instructions may result in damage to the vehicle.

Install the bucket tappet and shim assemblies.

GETtheMANUALS.org

# Engine - V8 4.2L Petrol / V8 S/C 4.2L Petrol - Engine

Assembly

| Special Tool(s) | |
|---|---|
| 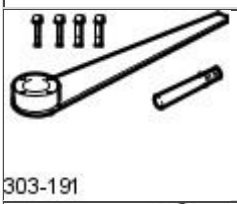 303-191 | Crankshaft locking, main tool<br><br>303-191 |
| 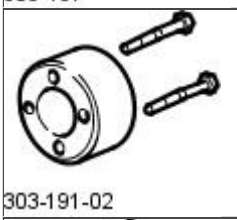 303-191-02 | Adapter<br><br>303-191-02 |
| 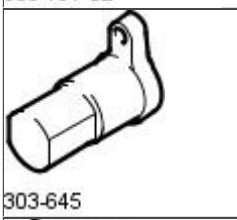 303-645 | Crankshaft setting, main tool<br><br>303-645 |
| 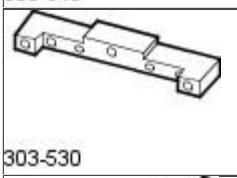 303-530 | Camshaft setting<br><br>303-530 |
| 303-532 | Timing chain tensioning tool<br><br>303-532 |
| 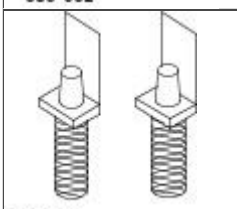 303535 | Cylinder Bore Protectors<br><br>303-535 |
| 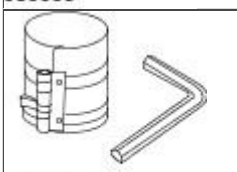 303372 | Piston Ring Compressor<br><br>303-372 |
| 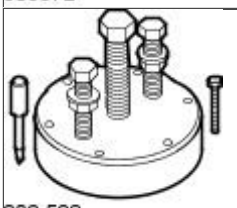 303-538 | Crankshaft rear oil seal remover/replacer<br><br>303-538 |
| 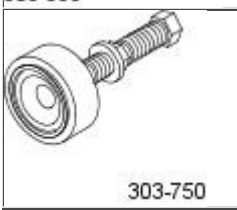 303-750 | Crankshaft front seal installer<br><br>303-538 |

## Assembly

All vehicles

**1.** CAUTION: Use only a plastic scraper when removing old gasket material.

Clean all the mating faces and reusable parts thoroughly and check for damage.

GETtheMANUALS.org

- If gasket material remains on the cylinder head after cleaning, use a plastic tipped scraper to remove remaining material.

**2.** NOTE: Never remove pipe plugs or alignment dowels unless they are to be serviced.

Reseal oil passage blanking plugs, as necessary.

**3.** NOTE: The main bearings are precision selective fit.

• NOTE: Lubricate the upper crankshaft main bearings and thrust washers.

Install the upper crankshaft main bearings.For additional information, refer to: Crankshaft Main Bearing Journal Clearance - V8 4.2L Petrol/V8 S/C 4.2L Petrol (303-00 Engine System - General Information, General Procedures).

1. Install the upper crankshaft thrust washers.
2. Install the upper crankshaft main bearings.

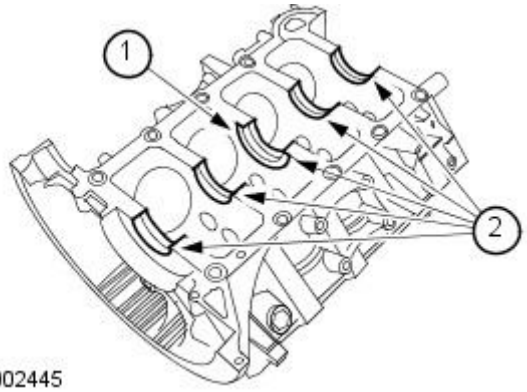

VUJ0002445

**4.** CAUTION: Avoid damage to any crankshaft bearing surfaces.

Install the crankshaft.

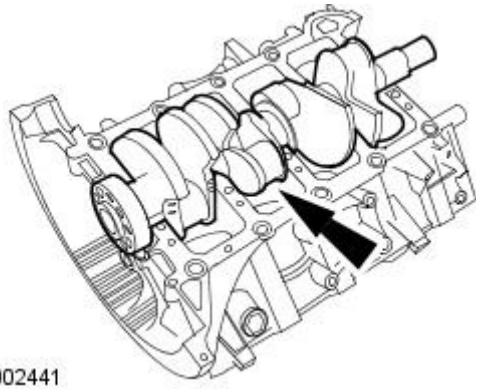
VUJ0002441

**5.** NOTE: The main bearings are precision selective fit.

• NOTE: Install lower cylinder block and tighten bolts to specification within twenty minutes of applying sealer.

Apply a bead of sealant to the cylinder block housing.For additional information, refer to: Crankshaft Main Bearing Journal Clearance - V8 4.2L Petrol/V8 S/C 4.2L Petrol (303-00 Engine System - General Information, General Procedures).

- Use WSS-M4G320-A3-RTV sealant.

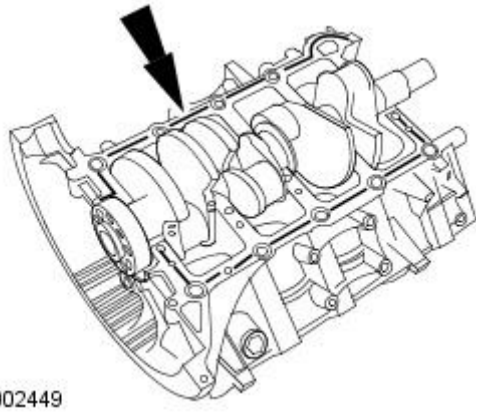
VUJ0002449

**6.** CAUTION: Make sure all dowels are fully seated into lower cylinder block prior to tightening the bolts.

• NOTE: Do not lubricate the lower cylinder block bolts.

• NOTE: Do not rotate crankshaft until all bolts are tightened to specification.

• NOTE: Bolts must be tightened within twenty minutes of applying sealer.

• NOTE: Tighten the bolts in the sequence shown.

Install the lower cylinder block to the upper cylinder block.

1. Tighten bolts 21 to 32 to 15 Nm
2. Tighten bolts 33 to 34 to 15 Nm
3. Tighten bolts 1 to 10 to 25 Nm
4. Tighten bolts 11 to 20 to 15 Nm
5. Tighten bolts 1 to 10 to 35 Nm +135°
6. Tighten bolts 11 to 20 to 20 Nm +150°
7. Tighten bolts 21 to 32 to 20 Nm +90°

GETtheMANUALS.org

8. Tighten bolts 33 to 34 to 20 Nm +150°

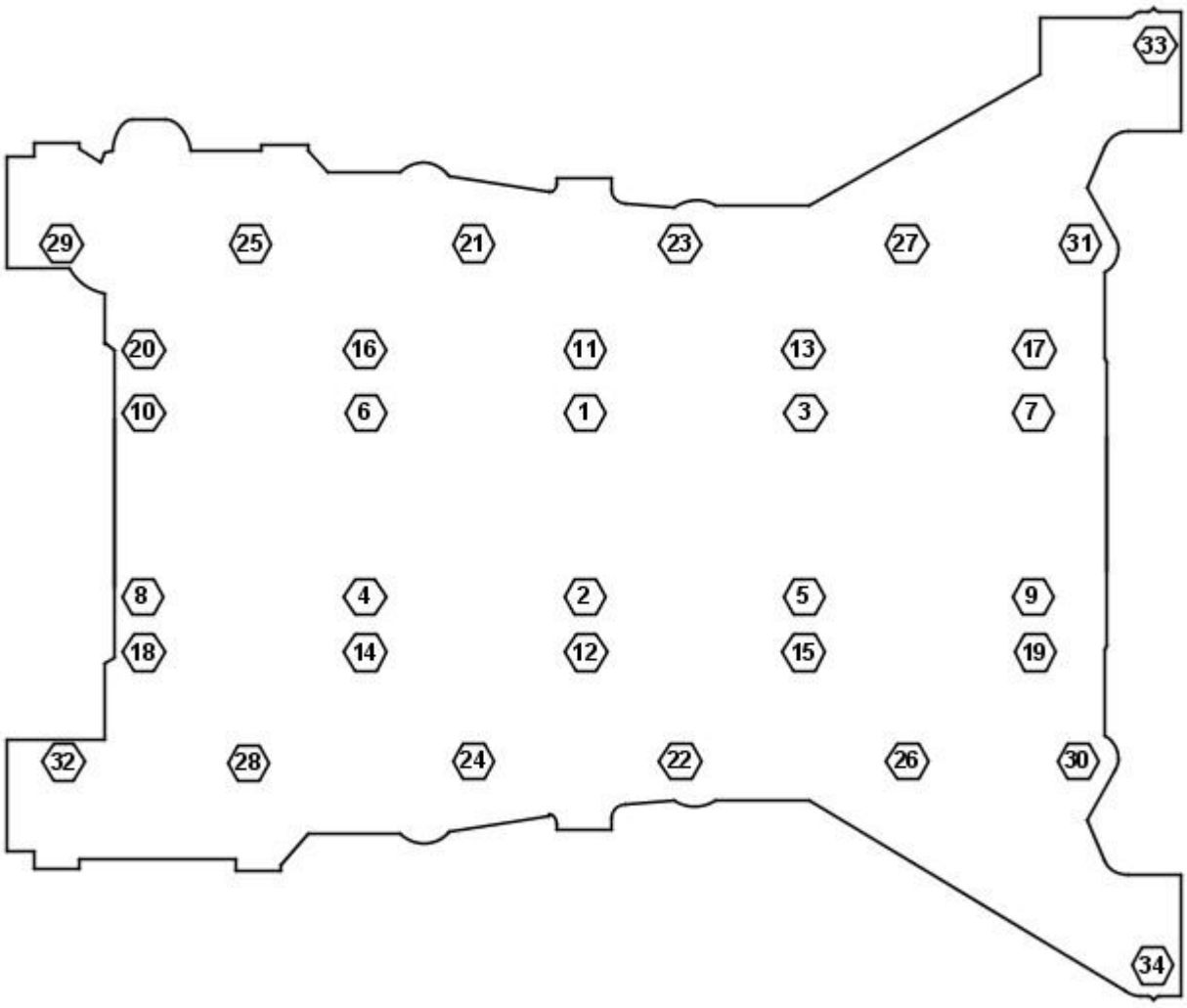


VUJ0002450

7. Rotate the crankshaft to check correct operation.
8. Remove excess sealant which may squeeze out at the front cover sealing surfaces.

All vehicles

9. NOTE: Make sure all components are clean and dry.

   Make sure the transit sleeve is correctly in place and install the new seal over the crankshaft. Do not use any lubricant on the seal, the transit sleeve or the crankshaft.
10. Carefully remove the transit sleeve, leaving the seal in place.
11. Install the special tool to the crankshaft.

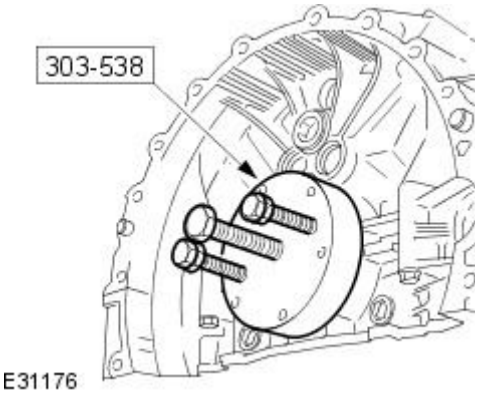


E31176

GETtheMANUALS.org

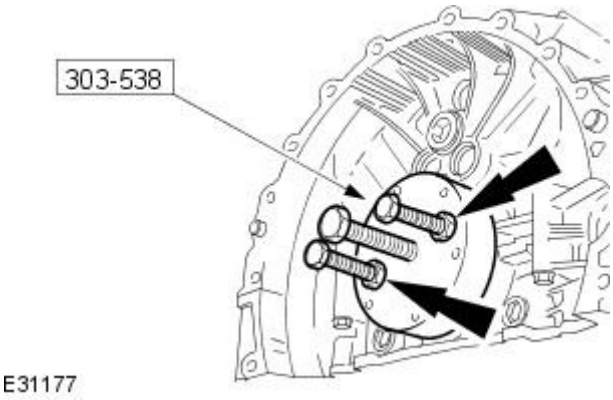


**12.** Reposition the nuts to hold the special tool against the crankshaft rear seal. Check that the crankshaft rear seal and the special tool are parallel to the rear of the engine.

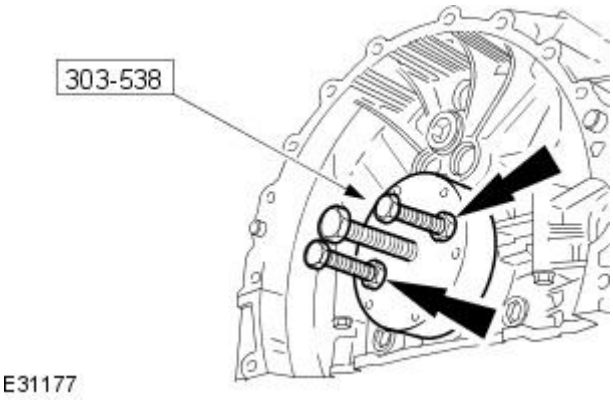


**13.** CAUTION: Alternate nut tightening to correctly seat the crankshaft rear seal.

Using the special tool, install the crankshaft rear seal.

**14.** Remove the special tool from the crankshaft.

- Check that the seal is located correctly.

**15.** CAUTION: Use appropriate protection to prevent damage to the crankshaft bearing journals and cylinder bore surfaces.

Install special tools to the connecting rods.

- Position the crankshaft journal at the bottom of the stroke.
- Make sure the piston rings are positioned at different positions opposite the thrust side of the piston before installation.

**16.** NOTE: Install pistons with arrow to front of engine.

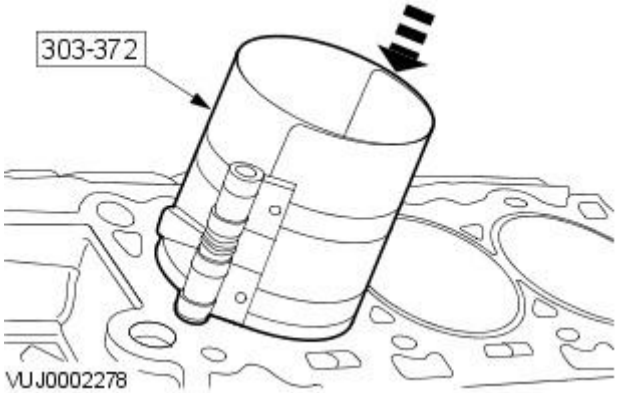


Using the special tool compress the rings and install the piston and connecting rod.

- Lubricate all piston components.

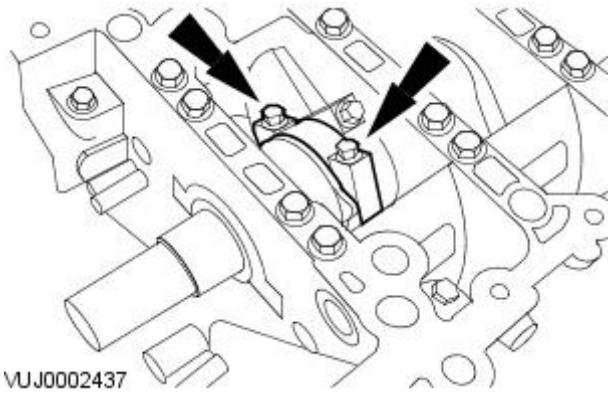


**17.** CAUTIONS:

When assembling the connecting rods and connecting rod caps it is imperative that bearing slots and tangs be located on the same side of the connecting rods.

Connecting rod bolts are torqued to yield and must be replaced.

Bolts must be tightened equally.

• NOTE: Remove the special tools from the connecting rods.

Position the connecting rod cap on the appropriate connecting rod.

1. Tighten to 10 Nm
2. Tighten to 30 Nm

GETtheMANUALS.org

3. Tighten to 90°

**18.** Rotate the crankshaft to check correct operation.

Vehicles with supercharger

**19.** Install the piston cooling jets.

- Tighten to 9 Nm

All vehicles

**20.** Install the oil pump.

- Install a new gasket.
- Tighten to 12 Nm.

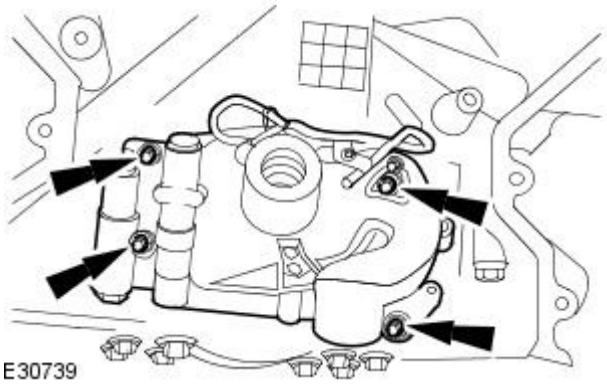


**21.** Install the upper oil pan.

- Install a new gasket.
- Tighten to 21 Nm.

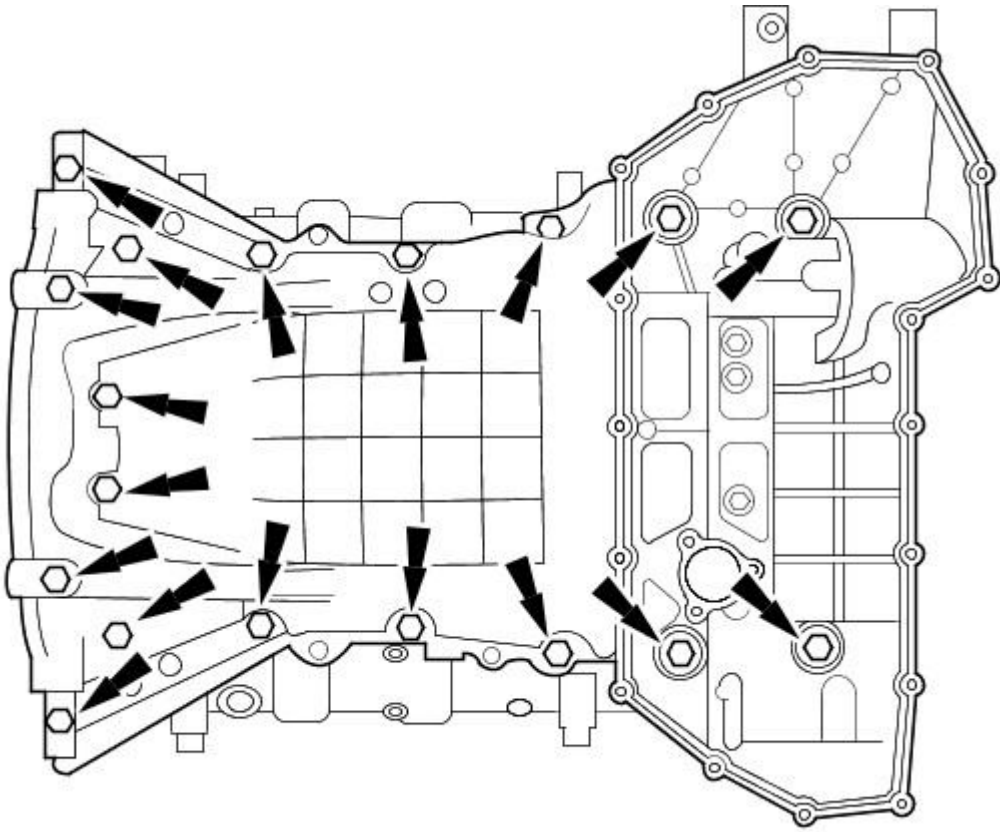


**22.** Install the oil strainer.

- Install a new O-ring seal.
- Tighten to 12 Nm.

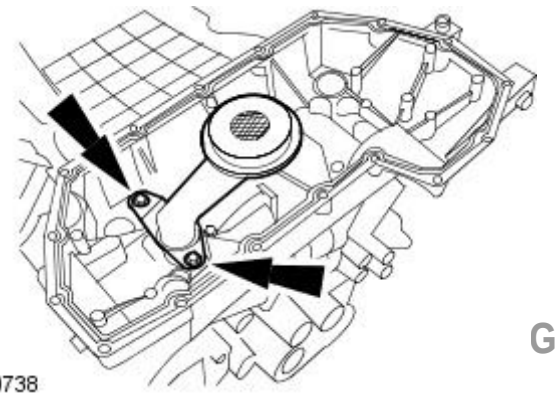


GETtheMANUALS.org

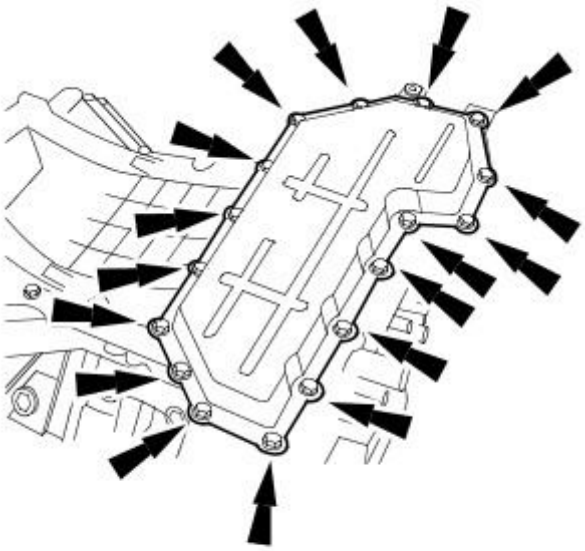

VUJ0002433

**23.** Install the lower oil pan.

- Install a new gasket.

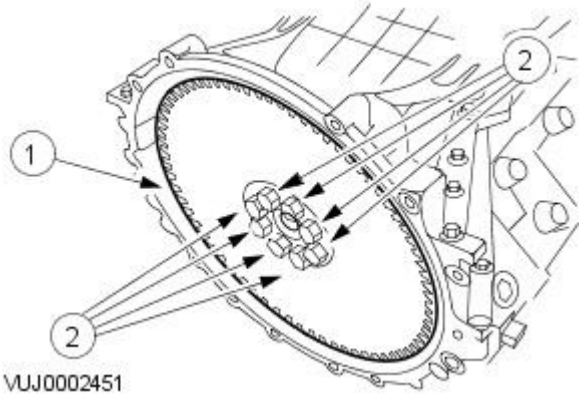


VUJ0002451

**24.** Install the drive plate.

1. Install the drive plate.
2. Install the drive plate retaining bolts.

- Tighten to 15 Nm.
- Tighten to 110 Nm.

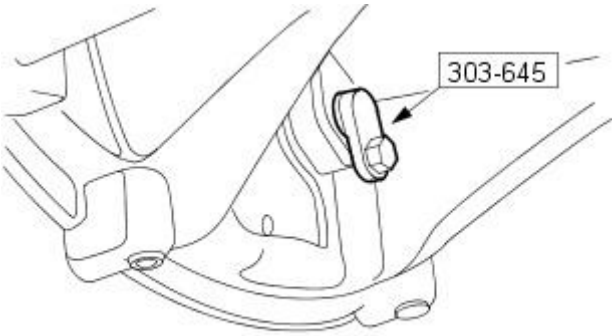


VUJ0002400

**25.** Position the crankshaft.

- Install the crankshaft setting peg 303645 to the crankshaft position sensor location.

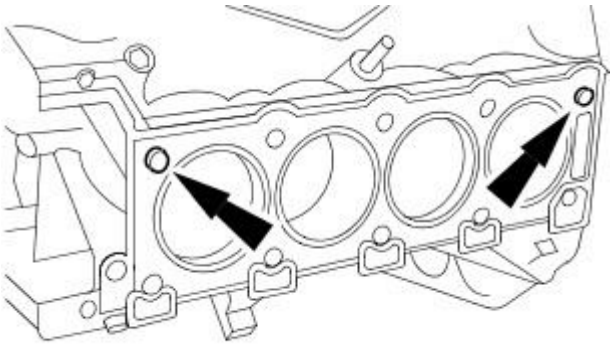

E31267

**26.** Install a new left-hand cylinder head gasket.

- Make sure the cylinder head dowels are correctly located.

GETtheMANUALS.org

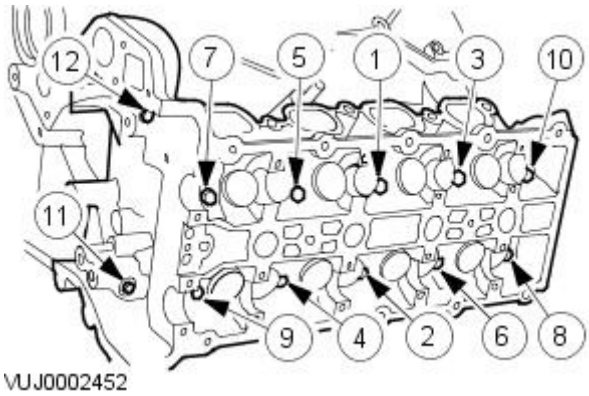


**27.** CAUTIONS:

The bolts can only be used twice, mark the bolts with a center punch. If two punch marks are visible, discard the bolts.

Vehicles fitted with Polydrive cylinder head bolts, the cylinder head bolts must be installed using a 10 mm Polydrive socket or a 10 mm Allen key. Failure to follow this instruction may result in damage to the component.

• NOTE: Tighten the bolts 1 to 10 in the sequence shown.

Install the left-hand cylinder head.

1. Tighten bolts 1 to 10 to 20 Nm.
2. Tighten bolts 1 to 10 to 35 Nm.
3. Tighten bolts 1 to 10 to 90°.
4. Tighten bolts 1 to 10 to 90°.
5. Tighten bolts 11 to 12 to 25 Nm.

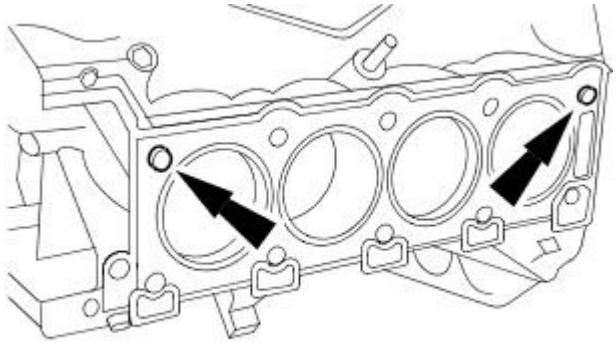


**28.** Install a new right-hand cylinder head gasket.

- Make sure the cylinder head dowels are correctly located.

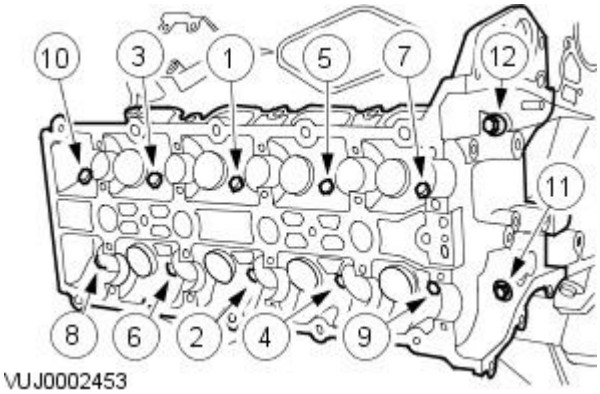


**29.** CAUTIONS:

The bolts can only be used twice, mark the bolts with a center punch. If two punch marks are visible, discard the bolts.

Vehicles fitted with Polydrive cylinder head bolts, the cylinder head bolts must be installed using a 10 mm Polydrive socket or a 10 mm Allen key. Failure to follow this instruction may result in damage to the component.

• NOTE: Tighten the bolts 1 to 10 in the sequence shown.

Install the right-hand cylinder head.

1. Tighten bolts 1 to 10 to 20 Nm.
2. Tighten bolts 1 to 10 to 35 Nm.
3. Tighten bolts 1 to 10 to 90°.
4. Tighten bolts 1 to 10 to 90°.
5. Tighten bolts 11 to 12 to 25 Nm.

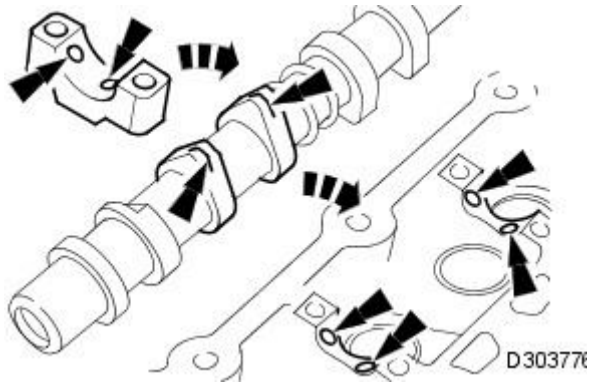


**30.** NOTE: Make sure all components are clean.

Apply oil (EP-90) to the camshaft and bearing surfaces, as follows:

- To the upper face of each bearing surface in the cylinder head.
- To the upper face of each bearing surface in each bearing cap.
- On the cam lobes ONLY, not on the base circle area.

GETtheMANUALS.org

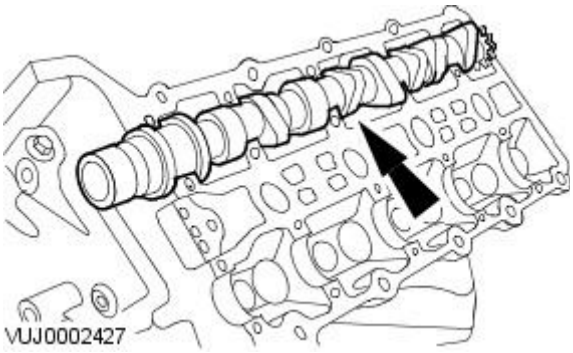


**31.** Install the left-hand inlet camshaft.

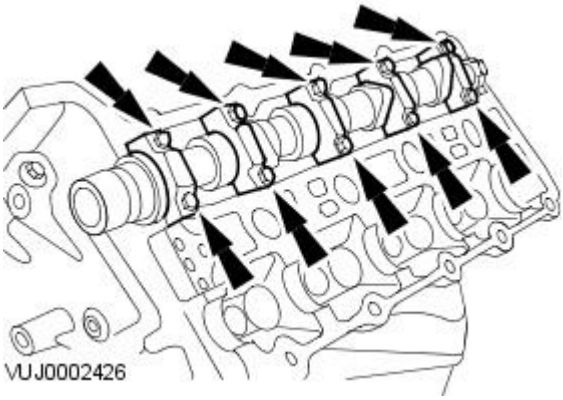


**32.** CAUTION: Alternate bolt tightening to correctly seat the camshaft bearing caps.

Install the camshaft bearing cap bolts evenly.

- Tighten to 10 Nm.

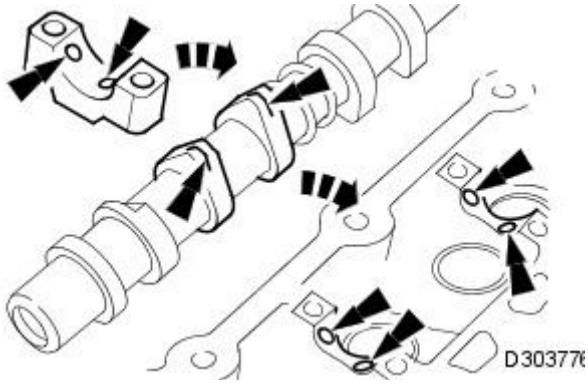


**33.** NOTE: Make sure all components are clean.

Apply oil (EP-90) to the camshaft and bearing surfaces, as follows:

- To the upper face of each bearing surface in the cylinder head.
- To the upper face of each bearing surface in each bearing cap.
- On the cam lobes ONLY, not on the base circle area.

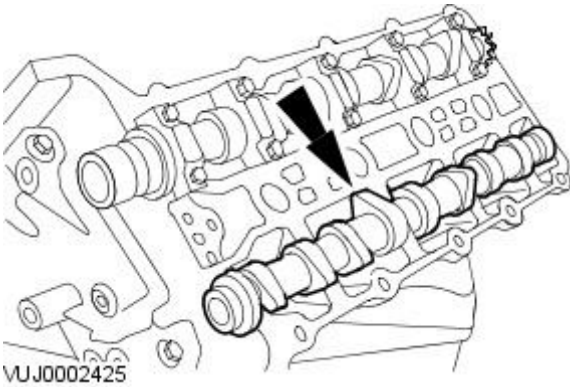


**34.** Install the left-hand exhaust camshaft.

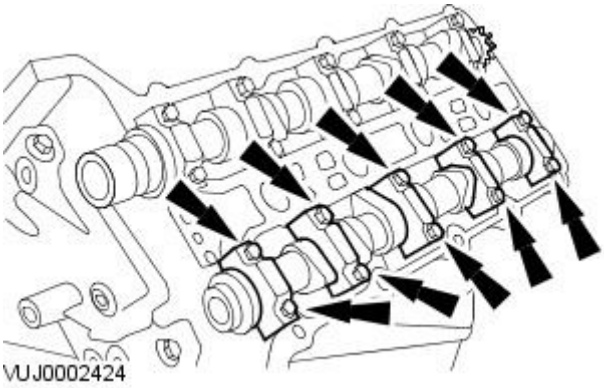


**35.** CAUTION: Alternate bolt tightening to correctly seat the camshaft bearing caps.

Install the camshaft bearing cap bolts evenly.

- Tighten to 10 Nm.

GETtheMANUALS.org

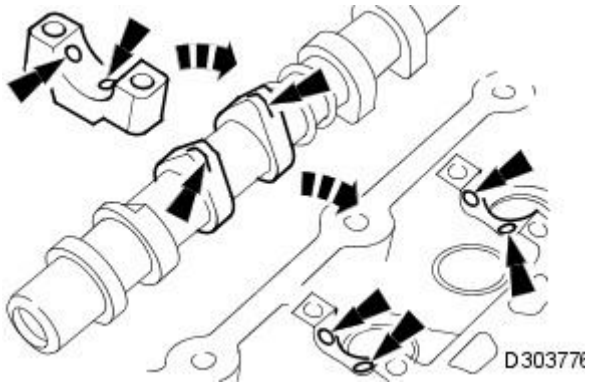


**36.** NOTE: Make sure all components are clean.

Apply oil (EP-90) to the camshaft and bearing surfaces, as follows:

- To the upper face of each bearing surface in the cylinder head.
- To the upper face of each bearing surface in each bearing cap.
- On the cam lobes ONLY, not on the base circle area.

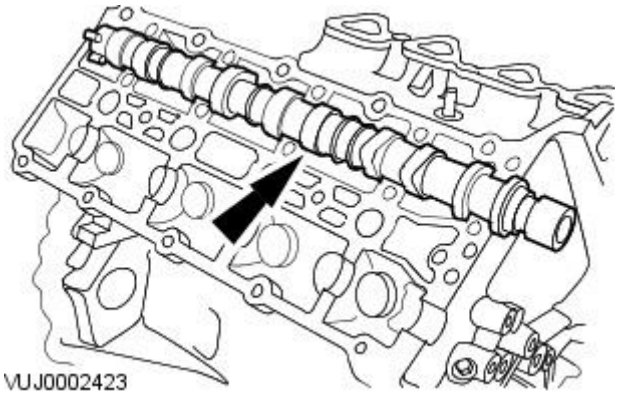


**37.** Install the right-hand inlet camshaft.

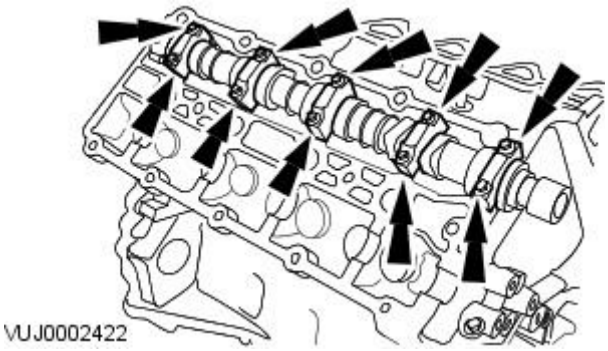


**38.** CAUTION: Alternate bolt tightening to correctly seat the camshaft bearing caps.

Install the camshaft bearing cap bolts evenly.

- Tighten to 10 Nm.

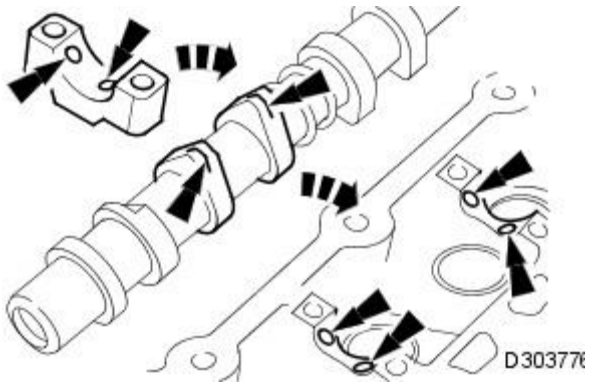


**39.** NOTE: Make sure all components are clean.

Apply oil (EP-90) to the camshaft and bearing surfaces, as follows:

- To the upper face of each bearing surface in the cylinder head.
- To the upper face of each bearing surface in each bearing cap.
- On the cam lobes ONLY, not on the base circle area.

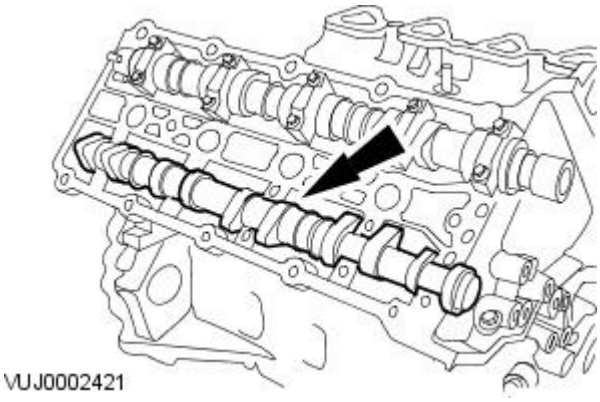


**40.** Install the right-hand exhaust camshaft.

GETtheMANUALS.org

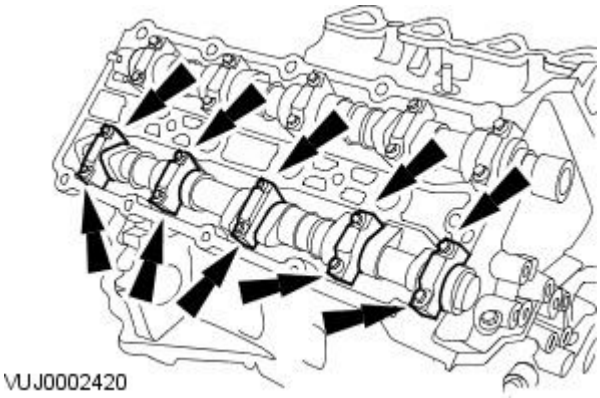


**41.** CAUTION: Alternate bolt tightening to correctly seat the camshaft bearing caps.

Install the camshaft bearing cap bolts evenly.

- Tighten to 10 Nm.

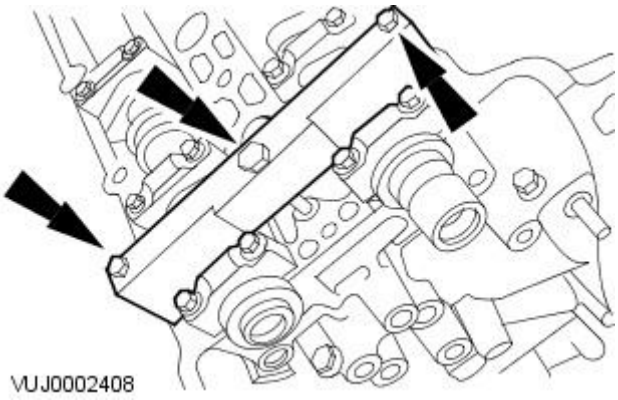


**42.** Install the camshaft setting tool.

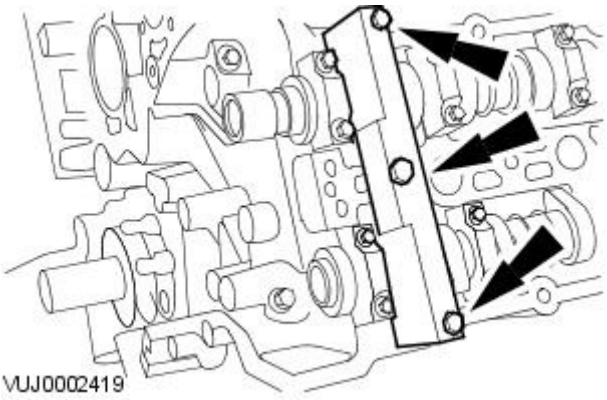


**43.** Install the camshaft setting tool.

All vehicles

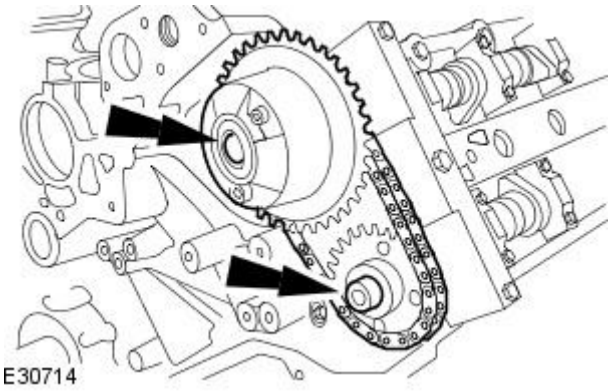


**44.** CAUTIONS:

Do not tighten the camshaft sprocket retaining bolts.

Make sure the secondary timing chain and camshaft sprockets are free to rotate.

Install the camshaft sprockets.

- Install the secondary timing chain tensioner and secondary timing chain to the camshaft sprockets.

GETtheMANUALS.org

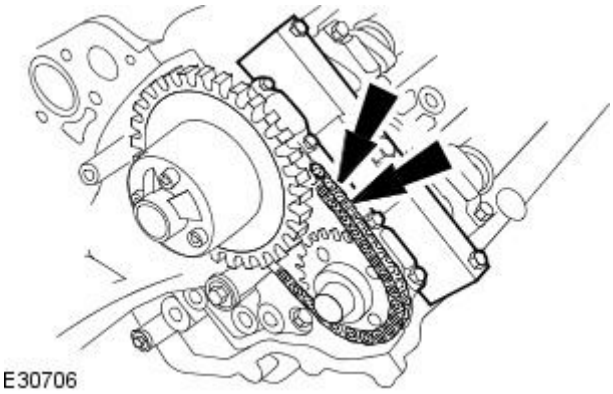


**45.** Install the secondary timing chain tensioner retaining bolts.

- Tighten to 12 Nm.

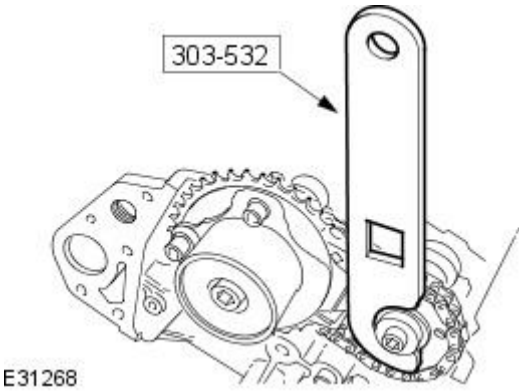


**46.** Install the timing chain tensioning tool 303-532 to the exhaust camshaft sprocket.

- Reposition the camshaft sprockets for the most advantageous position for use of the tool.

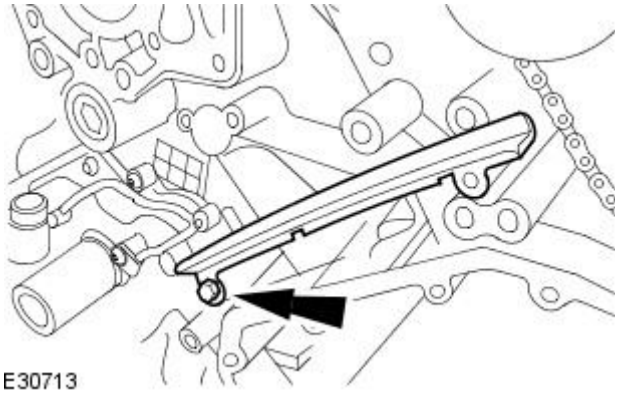


**47.** Install the primary timing chain tensioner guide.

- Tighten to 12 Nm.

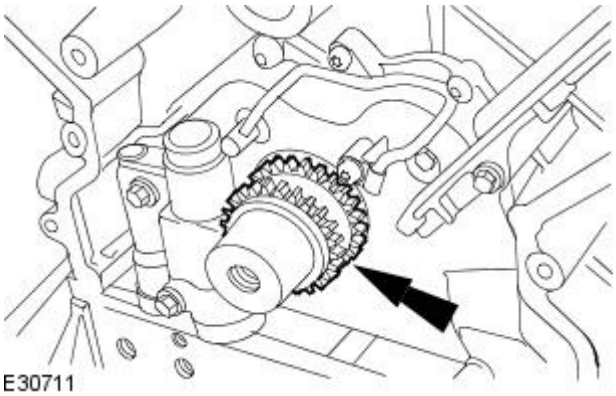


**48.** Install the crankshaft sprocket.

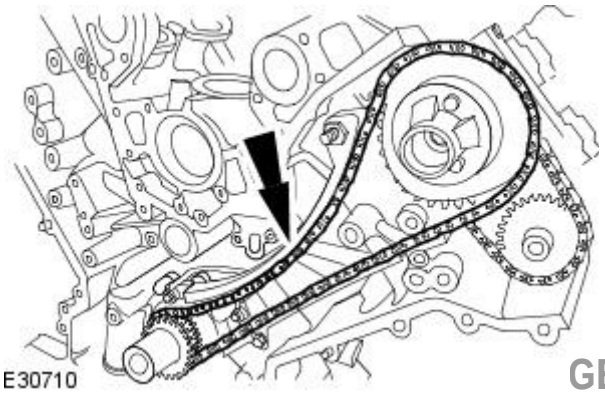


**49.** CAUTION: Make sure the timing chain slack is on the tensioned side of the timing chain.

Install the primary timing chain.

- Install the primary chain over the crankshaft sprocket and the intake sprocket.

GETtheMANUALS.org

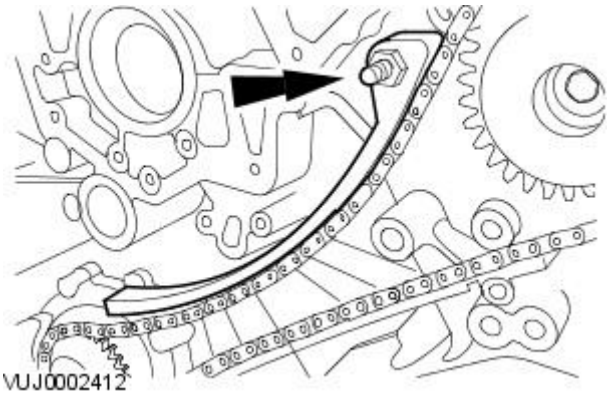


**50.** Install the primary timing chain tensioner guide.

- Tighten to 12 Nm.

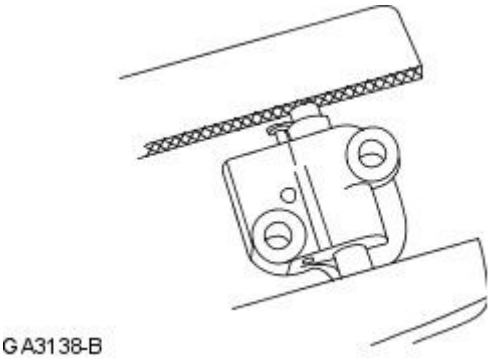


**51.** CAUTION: Use suitable protective covers on the vice jaws to protect the timing chain tensioner.

Secure the left-hand timing chain tensioner in the vice jaws.

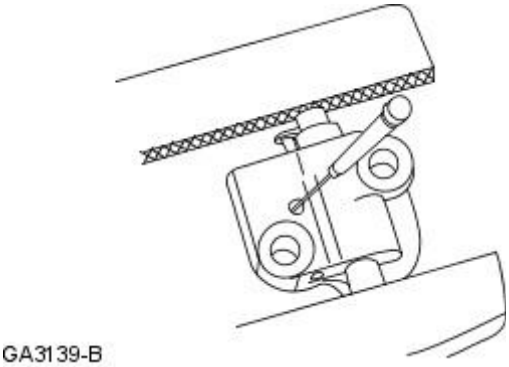


**52.** CAUTION: During timing chain tensioner compression, do not release the ratchet stem until the timing chain tensioner piston is fully bottomed in its bore or damage to the ratchet stem will result.

Using a suitable tool, hold the left-hand timing chain tensioner ratchet lock mechanism away from the ratchet stem.

**53.** NOTE: The timing chain tensioner piston should retract with minimal force. If binding occurs, reposition the timing chain tensioner to eliminate side loading.

Slowly compress the left-hand timing chain tensioner.

**54.** NOTE: The retaining tool must remain in the timing chain tensioner until the timing chain tensioner is installed to the engine with the piston bottomed in the bore.

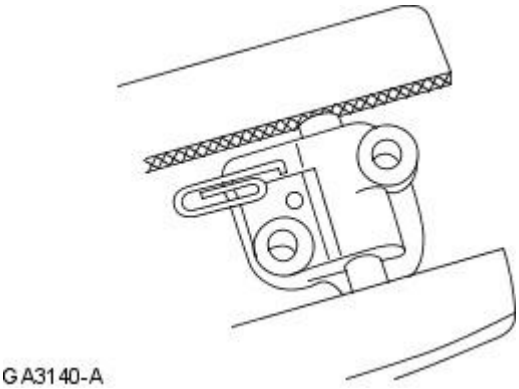


Using a suitable tool, retain the left-hand timing chain tensioner piston.

GETtheMANUALS.org

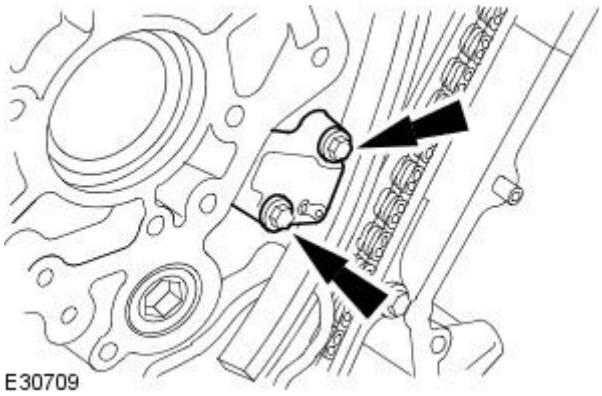


**55.** Install the primary timing chain tensioner assembly.

- Tighten to 12 Nm.

**56.** Release the tension in the left-hand timing chain tensioner.

- Remove the retaining tool.

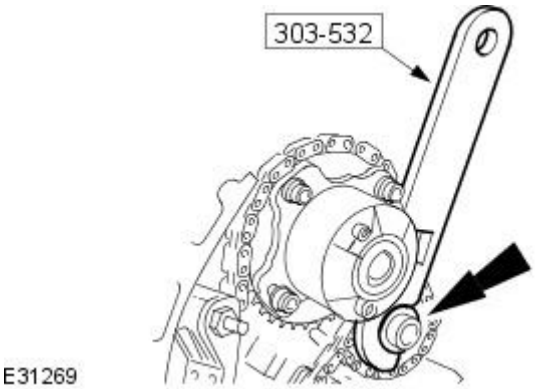


**57.** CAUTION: While applying the opposing force to sprocket and chain, tighten the sprocket bolt.

Using the special tool apply force to the tool in an anti-clockwise direction to tension the primary timing chain on its drive side.

- Tighten to 20 Nm + 90 deg.

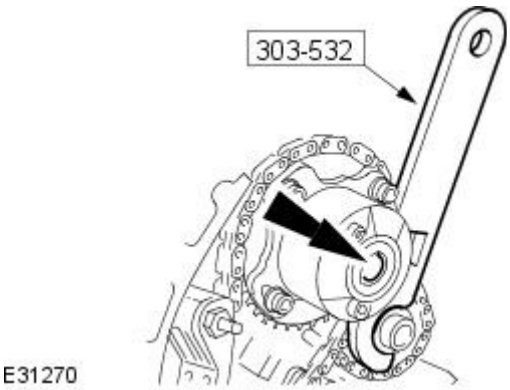


**58.** CAUTION: While applying the opposing force to sprocket and chain, tighten the sprocket bolt.

Using the special tool apply force to the tool in an anti-clockwise direction.

- Tighten to 20 Nm + 90 deg.

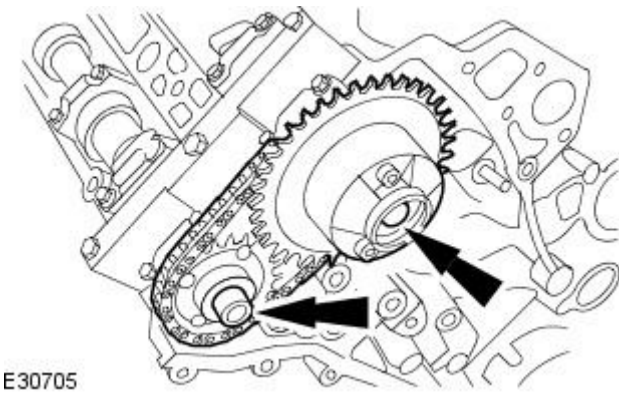


**59.** CAUTIONS:

Do not tighten the camshaft sprocket retaining bolts.

Make sure the secondary timing chain and camshaft sprockets are free to rotate.

Install the camshaft sprockets.

- Install the secondary timing chain tensioner and secondary timing chain to the camshaft sprockets.

GETtheMANUALS.org

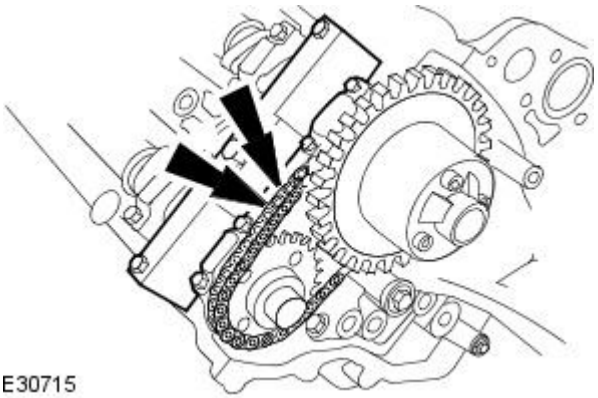
E30715

**60.** Install the secondary timing chain tensioner retaining bolts.

- Tighten to 12 Nm.

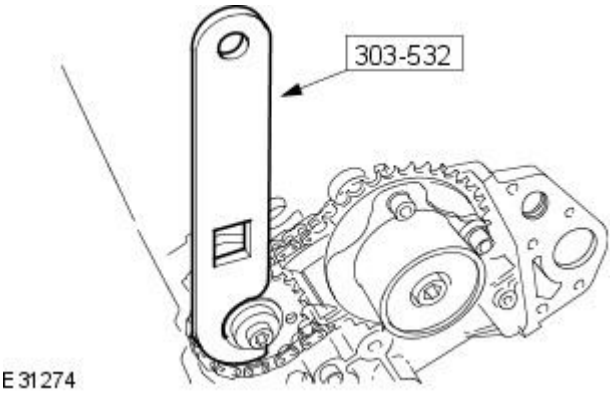

E31274

**61.** Install the timing chain tensioning tool 303-532 to the exhaust camshaft sprocket.

- Reposition the camshaft sprockets for the most advantageous position for use of the tool.

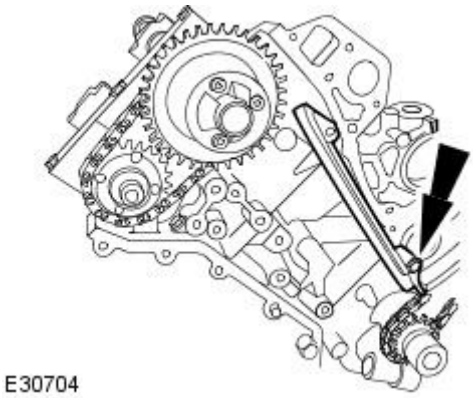
E30704

**62.** Install the primary timing chain guide.

- Tighten to 12 Nm.

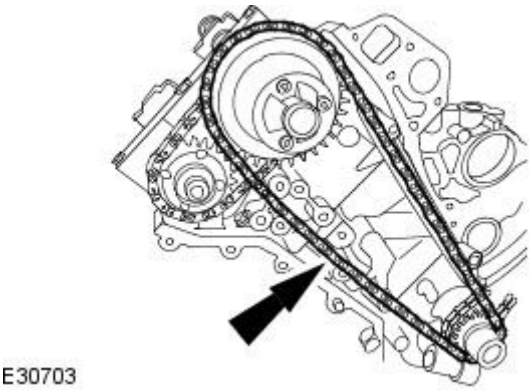
E30703

**63.** CAUTION: Make sure the timing chain slack is on the tensioned side of the timing chain.

Install the primary timing chain.

- Install the primary chain over the crankshaft sprocket and the intake sprocket.

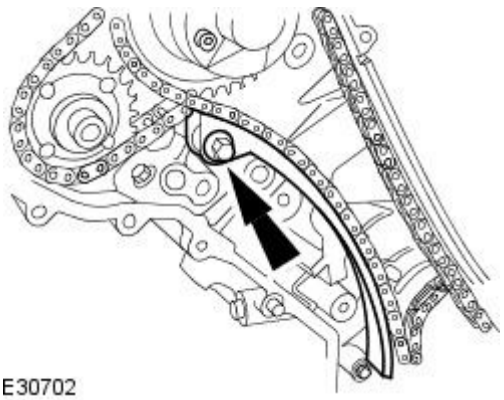
E30702

**64.** Install the primary timing chain tensioner guide.

- Tighten to 12 Nm.

GETtheMANUALS.org

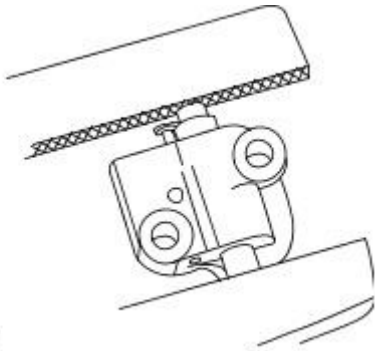

GA3138-B

**65.** CAUTION: Use suitable protective covers on the vice jaws to protect the timing chain tensioner.

Secure the right-hand timing chain tensioner in the vice jaws.

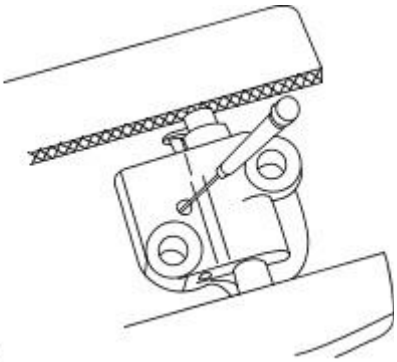

GA3139-B

**66.** CAUTION: During timing chain tensioner compression, do not release the ratchet stem until the timing chain tensioner piston is fully bottomed in its bore or damage to the ratchet stem will result.

Using a suitable tool, hold the right-hand timing chain tensioner ratchet lock mechanism away from the ratchet stem.

**67.** NOTE: The timing chain tensioner piston should retract with minimal force. If binding occurs, reposition the timing chain tensioner to eliminate side loading.

Slowly compress the right-hand timing chain tensioner.

**68.** NOTE: The retaining tool must remain in the timing chain tensioner until the timing chain tensioner is installed to the engine with the piston bottomed in the bore.

Using a suitable tool, retain the right-hand timing chain tensioner piston.

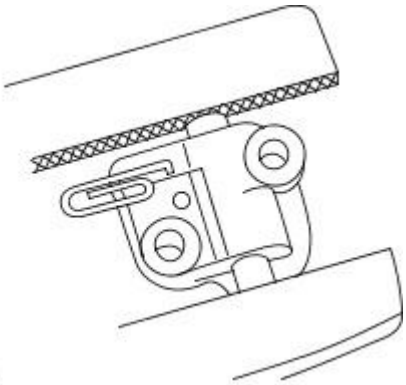

GA3140-A

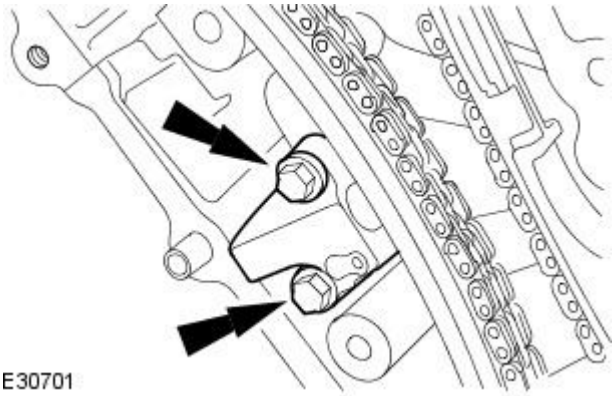

E30701

**69.** Install the primary timing chain tensioner assembly.

- Tighten to 12 Nm.

**70.** Release the tension in the right-hand timing chain tensioner.

- Remove the retaining tool.

GETtheMANUALS.org

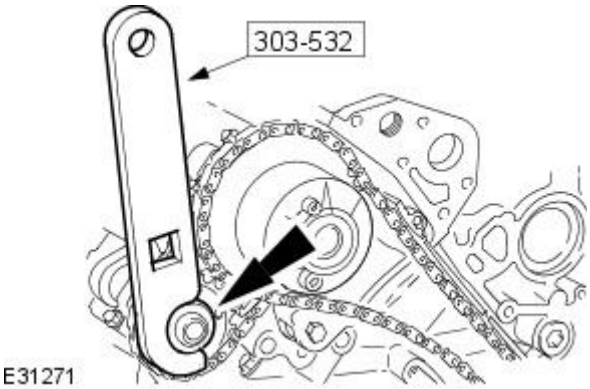


**71.** CAUTION: While applying the opposing force to sprocket and chain, tighten the sprocket bolt.

Using the special tool apply force to the tool in an anti-clockwise direction to tension the primary timing chain on its drive side.

- Tighten to 20 Nm + 90 deg.

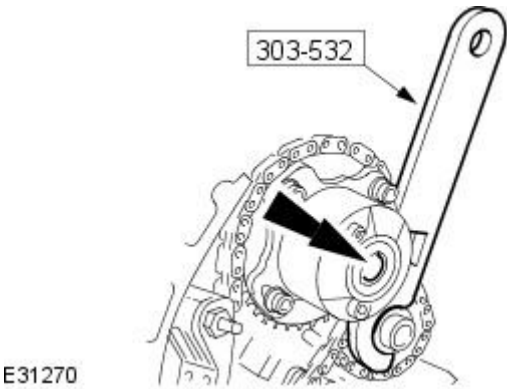


**72.** CAUTION: While applying the opposing force to sprocket and chain, tighten the sprocket bolt.

Using the special tool apply force to the tool in an anti-clockwise direction.

- Tighten to 20 Nm + 90 deg.

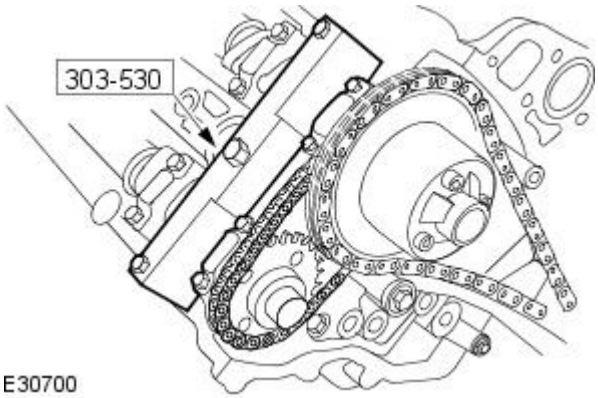


**73.** Remove the special tool to the Right-hand cylinder head.

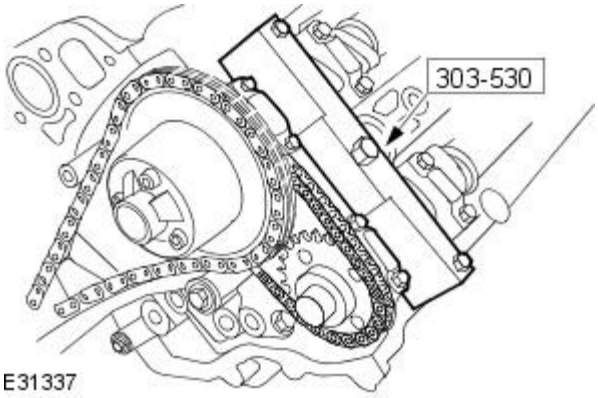


**74.** Remove the special tool to the left-hand cylinder head.

Vehicles without supercharger

GETtheMANUALS.org

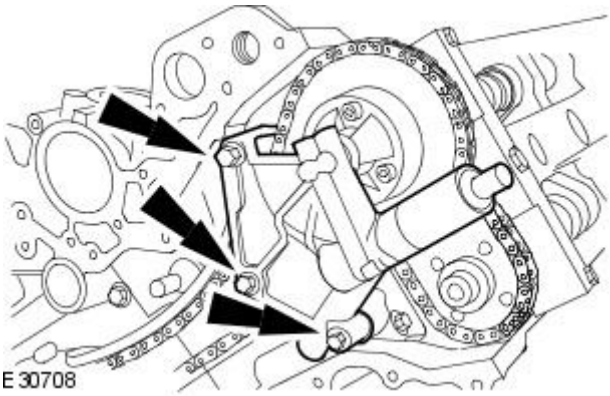


**75.** Install the left-hand variable camshaft timing oil control unit housing.

- Install new O-ring seals.
- Tighten to 22 Nm.

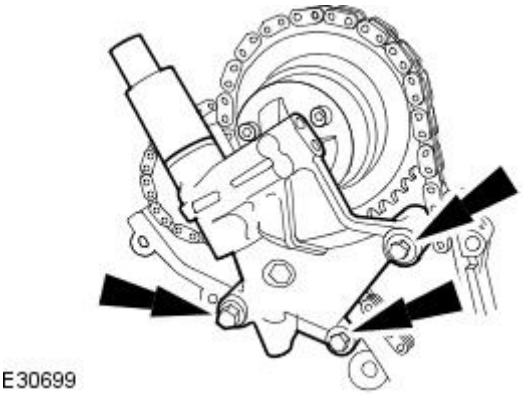


**76.** Install the right-hand variable camshaft timing oil control unit housing.

- Install new O-ring seals.
- Tighten to 22 Nm.

All vehicles

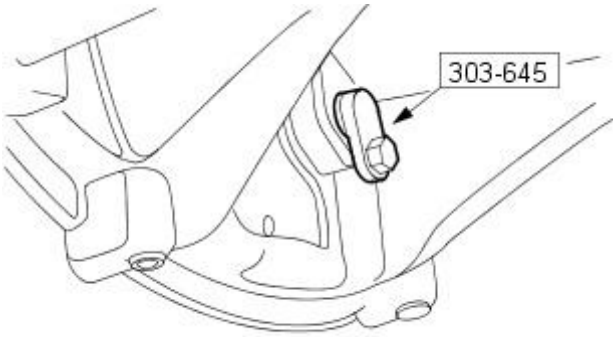


**77.** Remove the special tool.

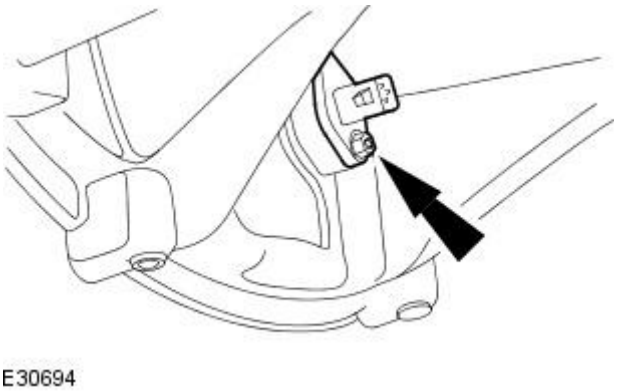


**78.** Install the crankshaft position sensor.

GETtheMANUALS.org

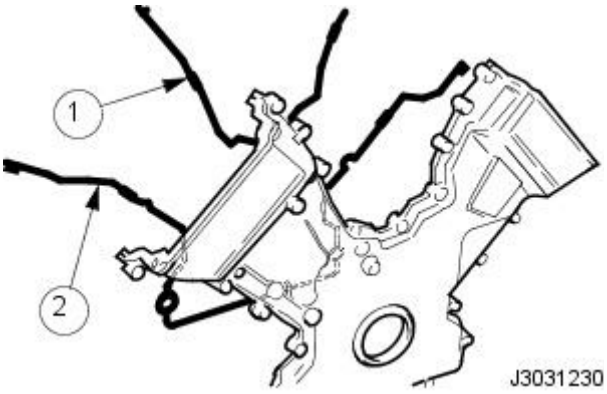


**79.** Install new seals to the timing cover.

1. Install the new seal to the inner groove on the face of the timing cover.
2. Install the new seal to the outer groove on the face of the timing cover.

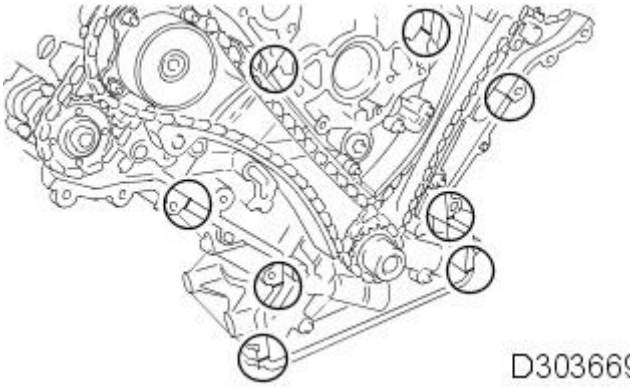


**80.** Apply sealant to the eight joints on the engine face.

- Sealant beads to be 3mm diameter and 12mm long. Cut the nozzle of the sealant tube to produce a 3 mm (0.12 in) bead. (Install and tighten the securing bolts within twenty minutes of sealant application).

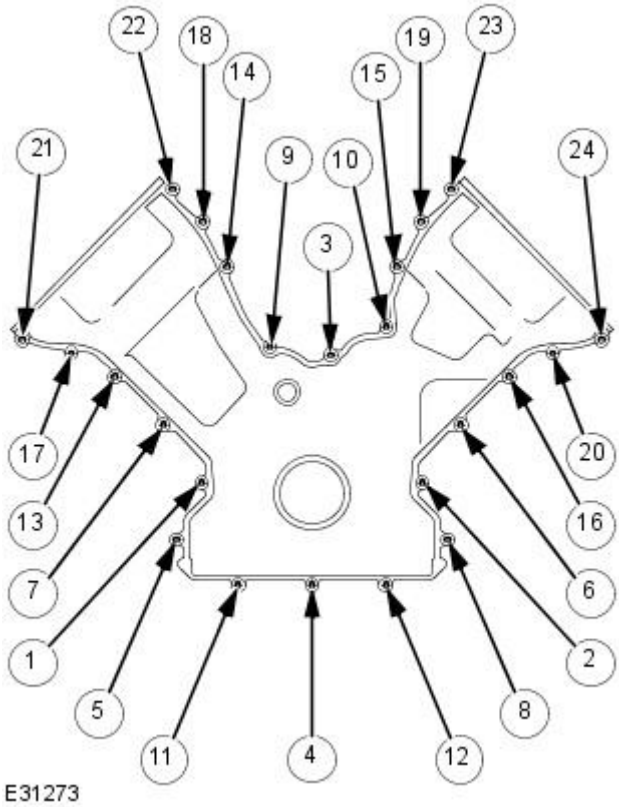


**81.** Install the timing cover.

- Tighten in the sequence shown.

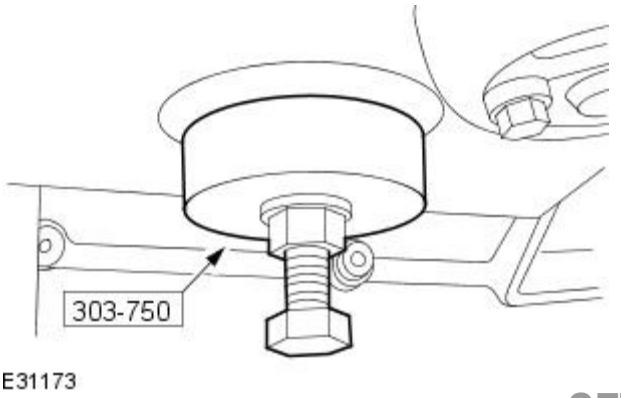


**82.** CAUTIONS:

Make sure the crankshaft front seal mating faces are clean and dry.

Do not remove the crankshaft front seal protector.

Using the special tool, install a new crankshaft front seal.

GETtheMANUALS.org

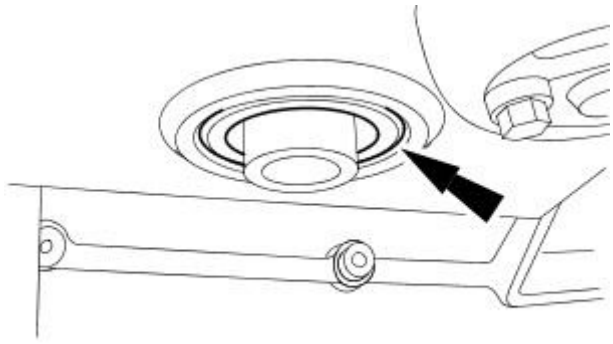

E31172

**83.** Remove the crankshaft seal protector.

**84.** Install a new O-ring seal to the crankshaft pulley.

- Lubricate the new O-ring.

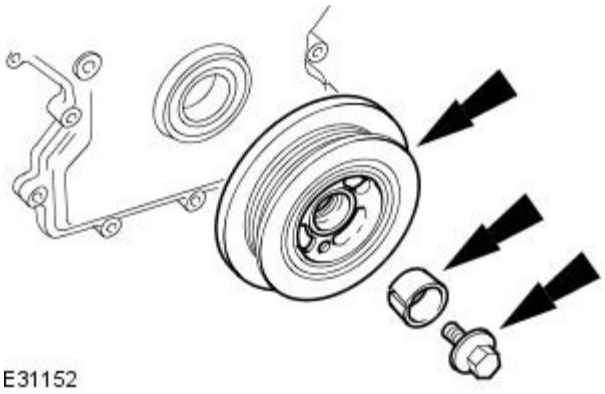

E31152

**85.** CAUTIONS:

The screw thread in the crankshaft must be cleaned out before a new crankshaft pulley bolt is installed.

A new crankshaft pulley bolt must be used.

Install, but do not tighten, a new crankshaft pulley retaining bolt.

- Install the crankshaft pulley and locking ring to the crankshaft.

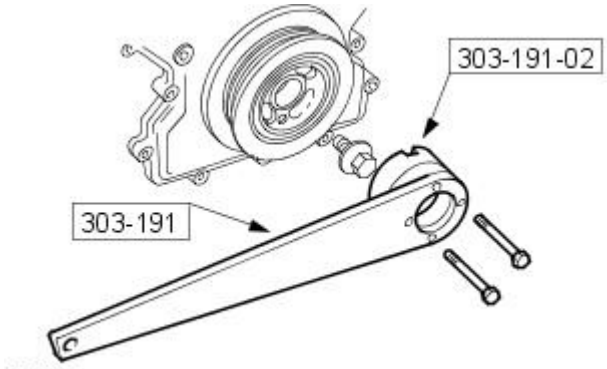


E31149

**86.** CAUTION: Under no circumstances should the crankshaft setting peg 303-645 be used in the following operations to lock the crankshaft.

Using special tools, retain the crankshaft pulley.

- Tighten the crankshaft pulley retaining bolt to 375 Nm.

**87.** Remove the special tools.

**88.** Carry out a valve clearance check. For additional information, refer to: Valve Clearance Check (303-01B Engine - V8 4.2L Petrol/V8 S/C 4.2L Petrol, General Procedures)..

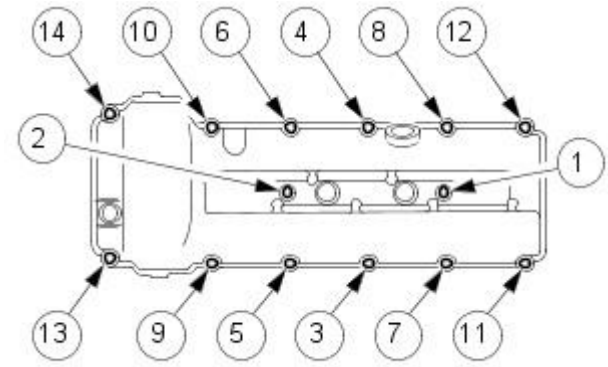


VUJ0001977

**89.** NOTE: Apply an 8mm diameter bead of silicone gasket sealant on the two places where the cylinder head and front cover join.

Install the left-hand valve cover.

- Install new valve cover gaskets.
- Tighten in the sequence shown.
- Tighten to 10 Nm.

GETtheMANUALS.org

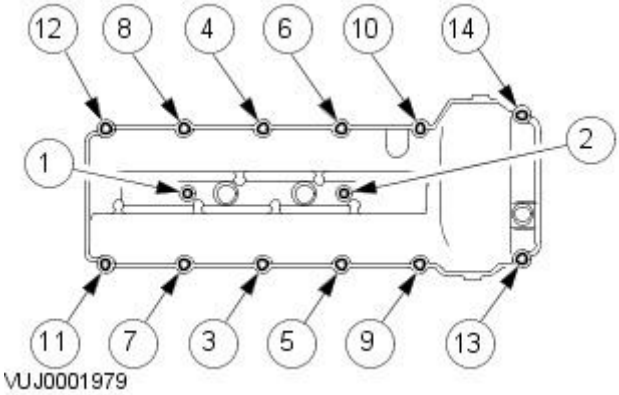


**90.** NOTE: Apply an 8mm diameter bead of silicone gasket sealant on the two places where the cylinder head and front cover join.

Install the right-hand valve cover.

- Install new valve cover gaskets.
- Tighten in the sequence shown.
- Tighten to 10 Nm.

**91.** Install the spark plugs.

- Tighten to 27 Nm.

**92.** Install the left-hand camshaft position (CMP) sensor.

- Install a new O-ring seal.

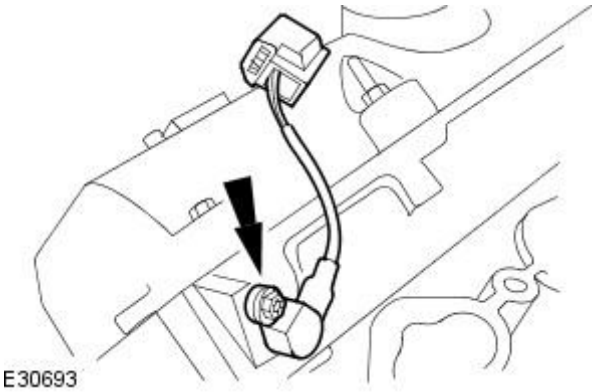


**93.** Install the right-hand camshaft position (CMP) sensor.

- Install a new O-ring seal.

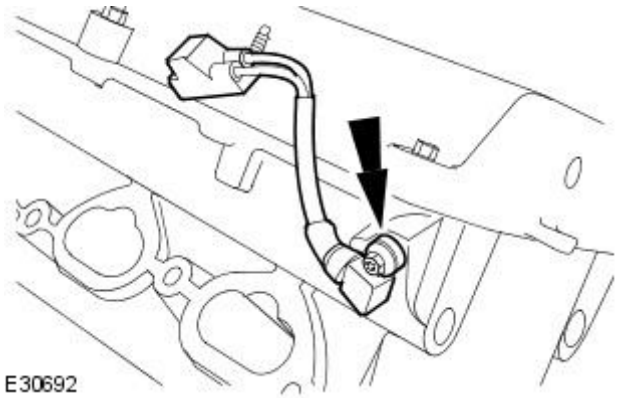


**94.** NOTE: Left-hand shown, right-hand similar

Install the ignition coils.

- Tighten to 5 Nm.

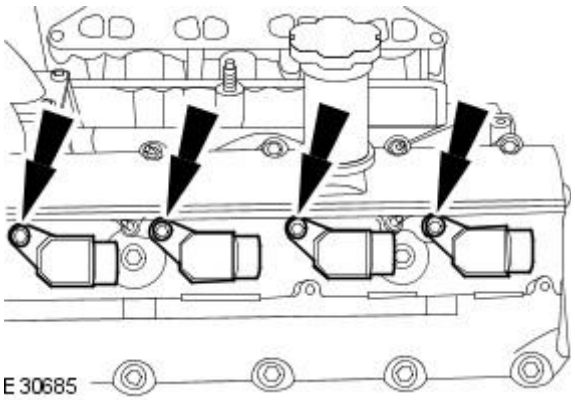


Vehicles without supercharger

GETtheMANUALS.org

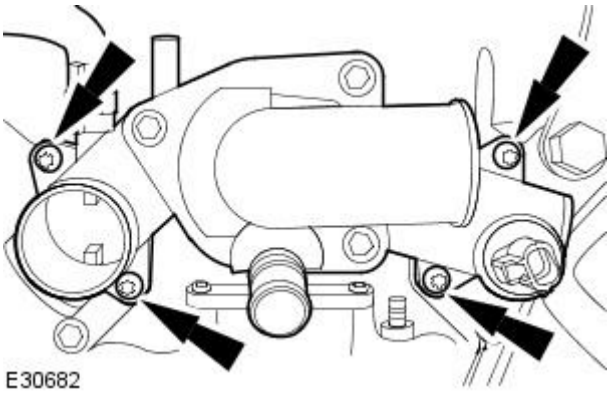


**95.** Install the thermostat housing.

- Install new O-ring seals.
- Tighten to 10 Nm.

All vehicles

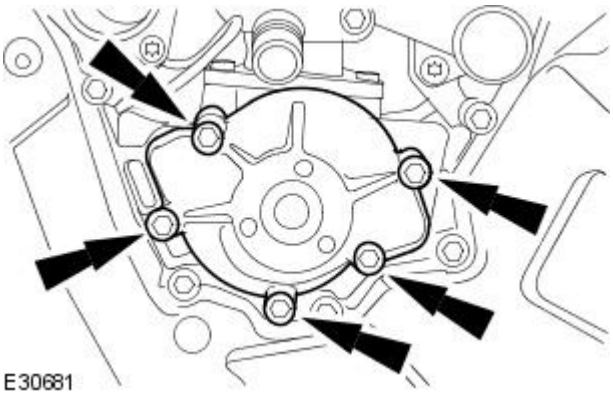


**96.** Install the water pump.

- Install new O-ring seals and gaskets.
- Tighten to 12 Nm.

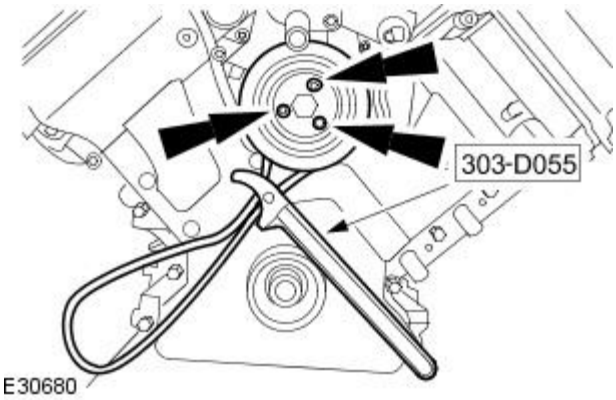


**97.** Install the water pump pulley.

- Using special tool, retain the water pump pulley.
- Tighten to 10 Nm + 45°.

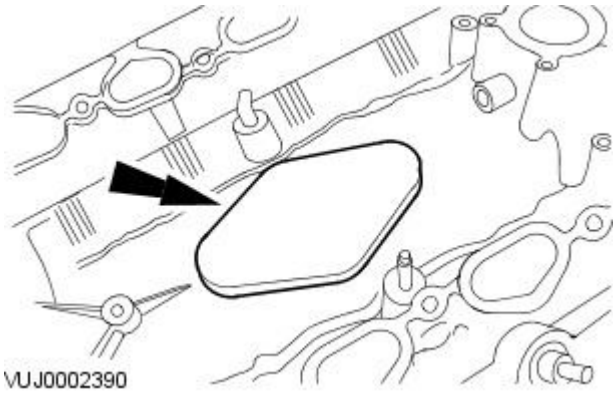


**98.** Install the engine block insulation grommet.

GETtheMANUALS.org

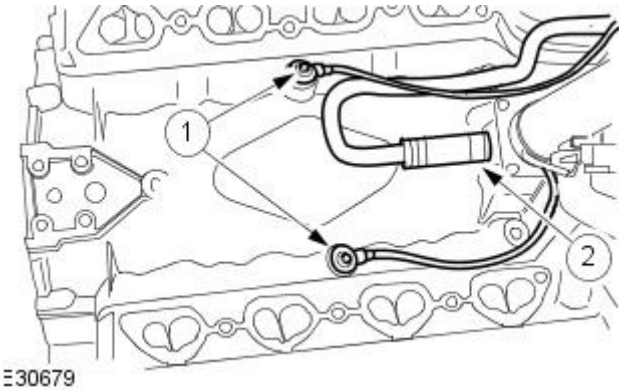


**99.** Install the intake manifold heater coolant hose.

1. Install the knock sensors.

- Tighten to 20 Nm.

2. Install the intake manifold heater coolant hose.

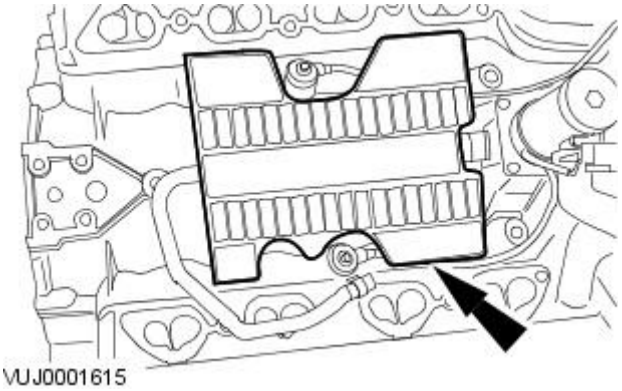


**100.** Install the noise and vibration insulating pad.

**101.** Install the engine wiring harness

**102.** Attach the engine wiring harness retaining clips.

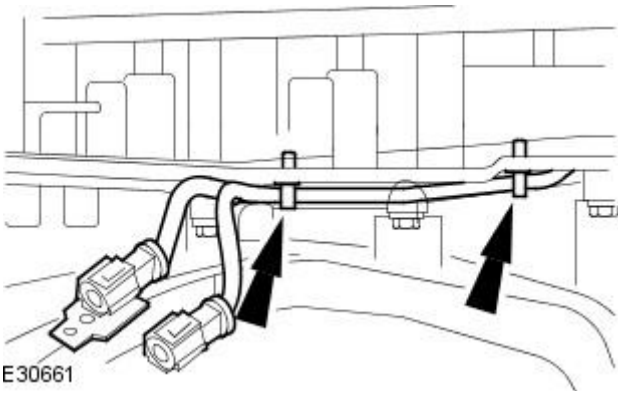


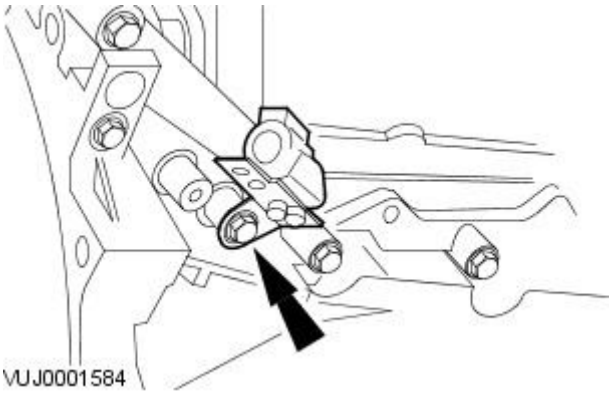


**103.** Attach the right-hand oxygen sensor.

- Tighten to 10 Nm.

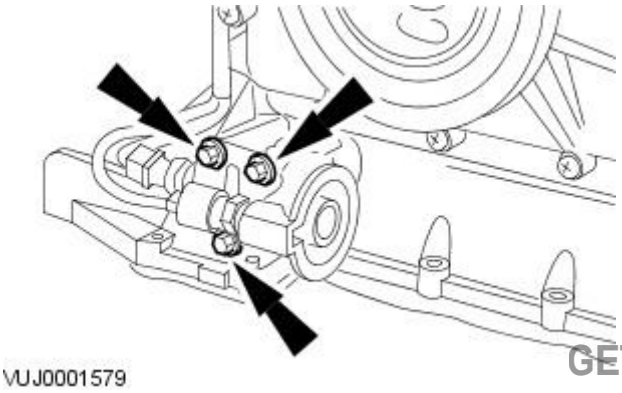


**104.** Install the oil filter housing.

- Install a new gasket.
- Tighten to 21 Nm.

GETtheMANUALS.org

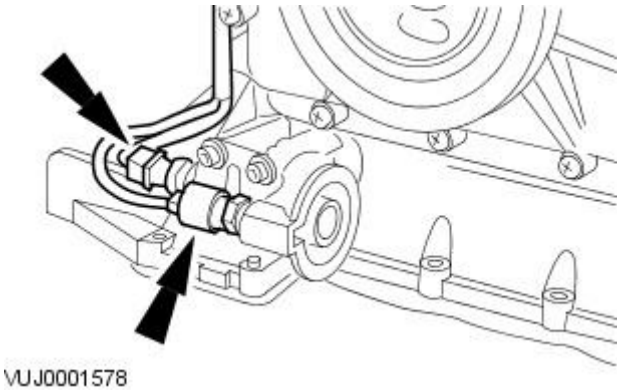

VUJ0001578

**105.** Connect the oil pressure switch and oil temperature sensor electrical connectors.

Vehicles without supercharger

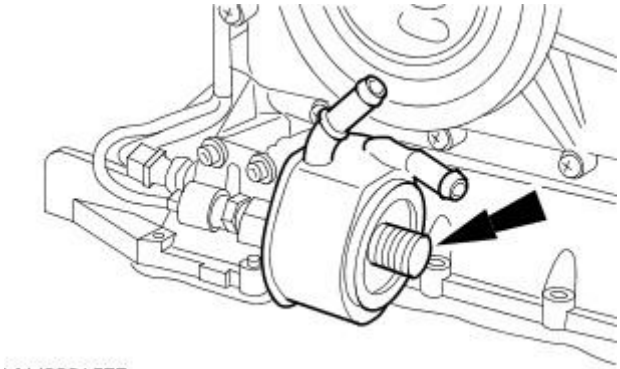

VUJ0001577

**106.** Install the oil cooler.

- Install a new O-ring seal.
- Tighten to 55 Nm.

All vehicles

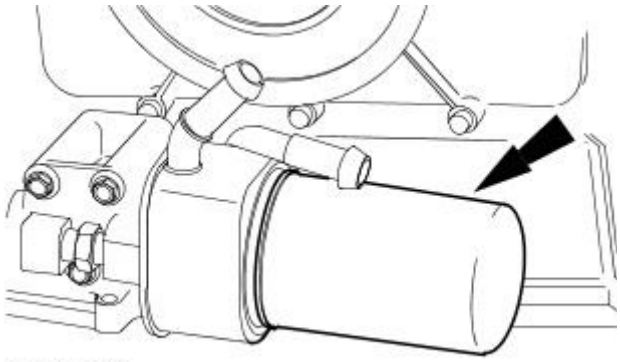

VUJ0001576

**107.** NOTE: Apply a suitable amount of clean engine oil to lubricate the oil filter O-ring seal.

Install a new oil filter.

- Tighten to 18 Nm.

Vehicles without supercharger

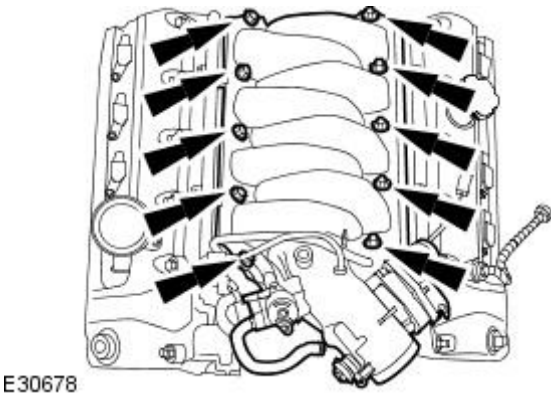

E30678

**108.** Install the intake manifold.

- Tighten to 22 Nm.

GETtheMANUALS.org

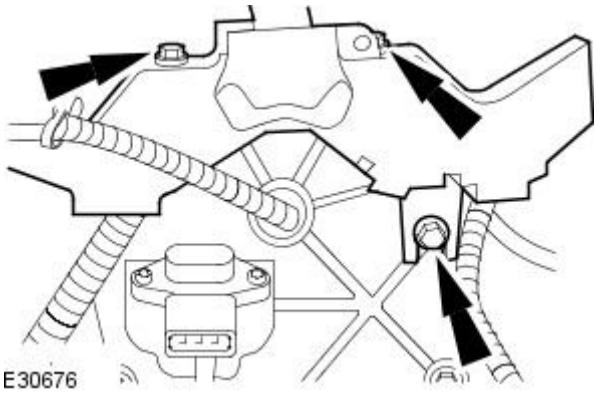


**109.** Attach the engine wiring harness.

- Tighten to 10 Nm.

All vehicles

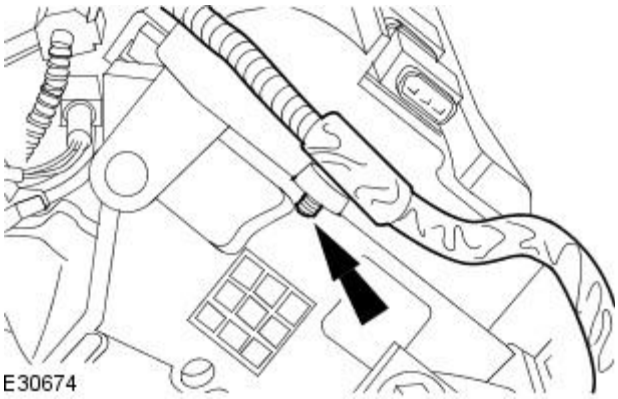


**110.** Attach the engine wiring harness

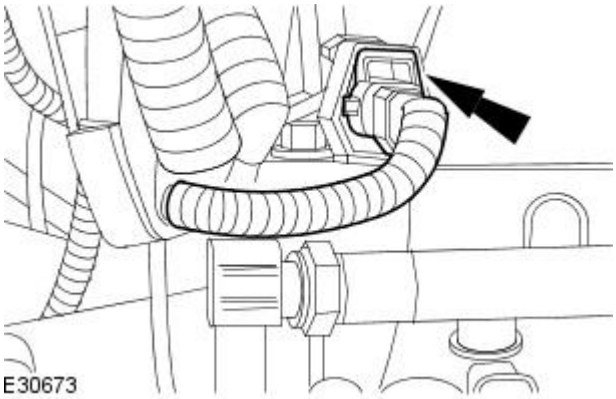


**111.** Connect the camshaft position sensor electrical connector.

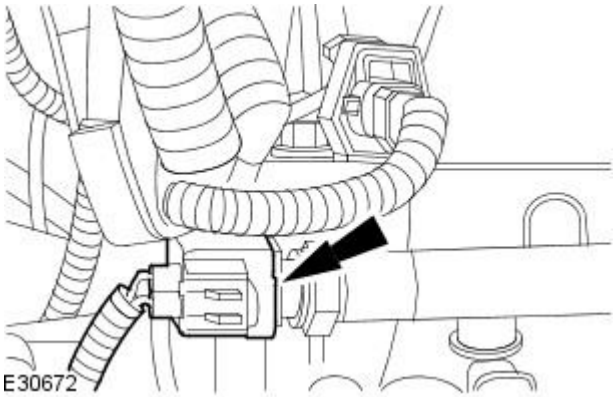


**112.** Connect the fuel temperature sensor electrical connector.

GETtheMANUALS.org

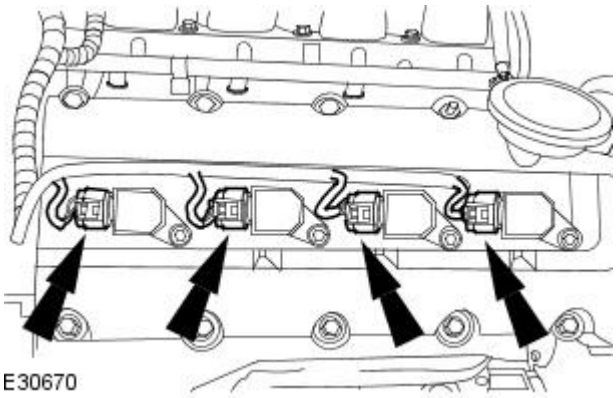


**113.** Connect the ignition coil electrical connectors.

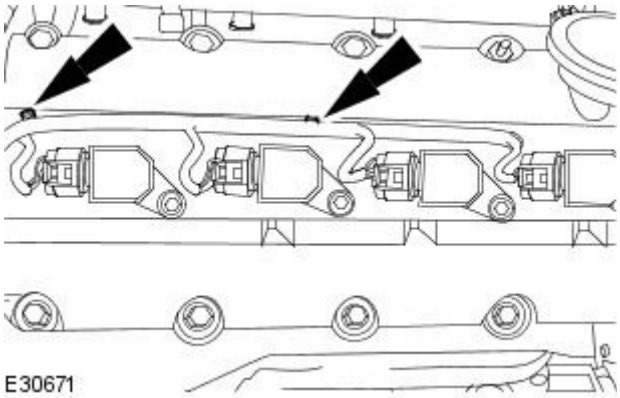


**114.** Attach the engine wiring harness.

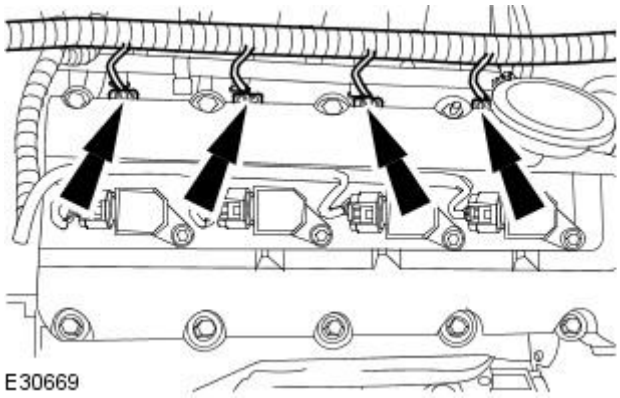


**115.** Connect the fuel injector electrical connectors.

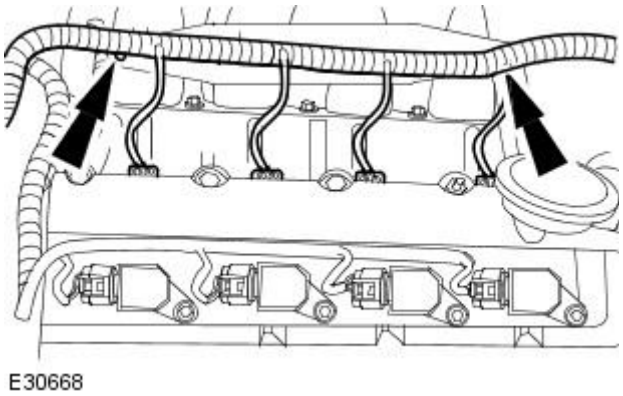


**116.** Attach the engine wiring harness.

Vehicles without supercharger

GETtheMANUALS.org

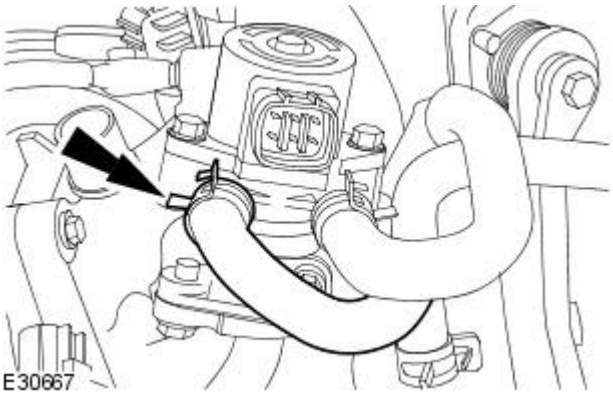


**117.** Connect the exhaust gas recirculation valve coolant hose.

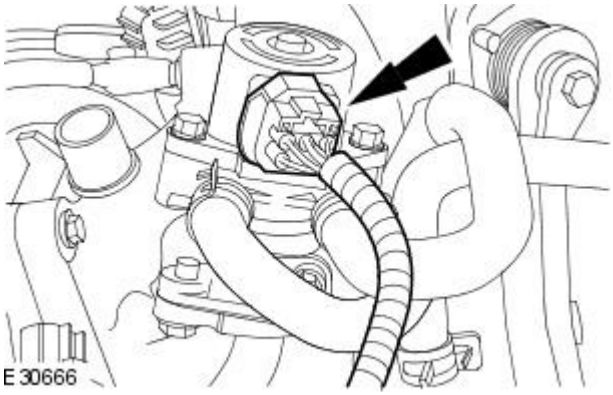


**118.** Connect the exhaust gas recirculation valve electrical connector.

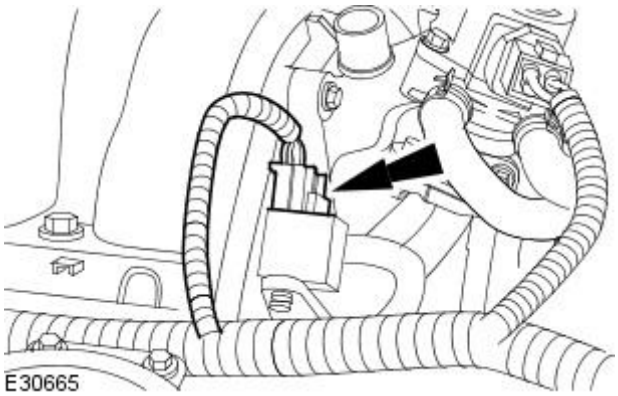


**119.** Connect the fuel pressure regulator electrical connector.

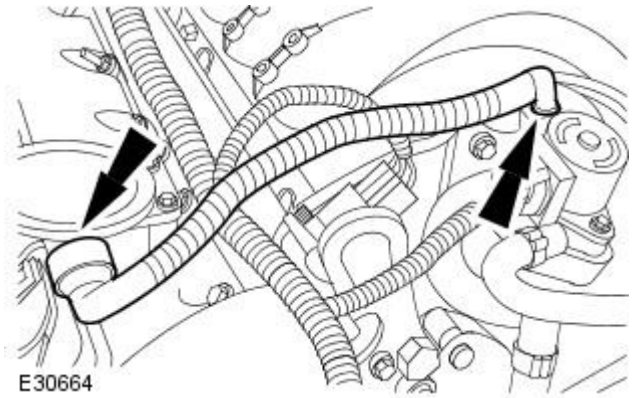


**120.** Connect the positive crankcase ventilation pipe.

All vehicles

GETtheMANUALS.org

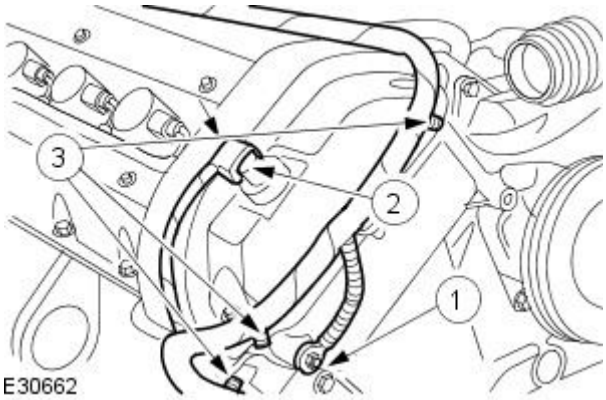


**121.** Attach the engine harness.

1. Connect the variable valve timing (VCT) solenoid electrical connector.
2. Attach the engine harness.

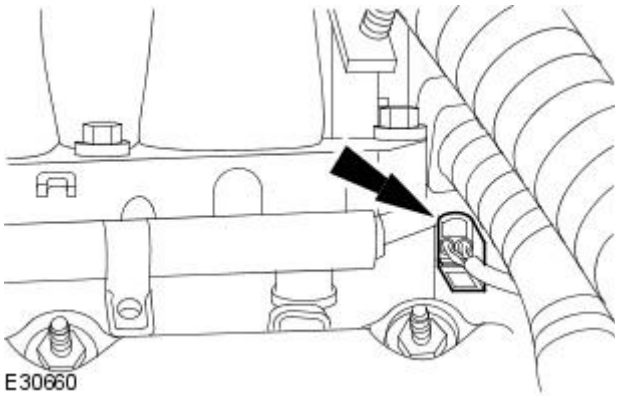


**122.** Connect the camshaft position sensor electrical connector.

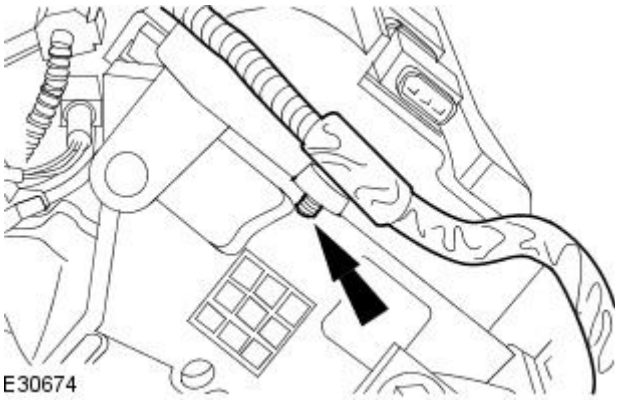


**123.** Attach the engine wiring harness.

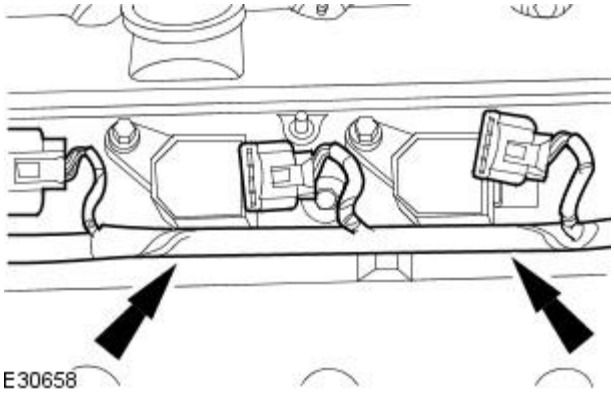


**124.** Attach the engine wiring harness.

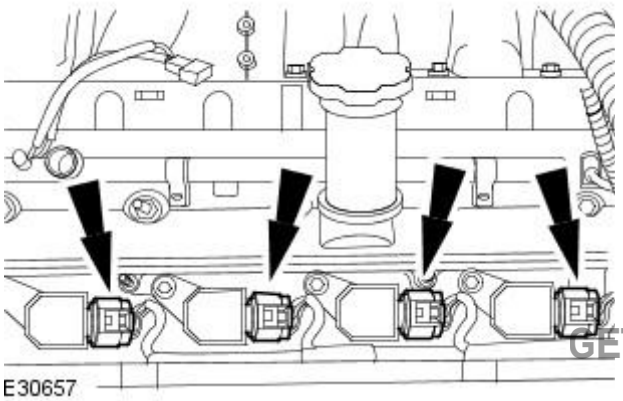


**125.** Connect the ignition coil electrical connectors.

GETtheMANUALS.org

**126.** Connect the fuel injector electrical connectors.

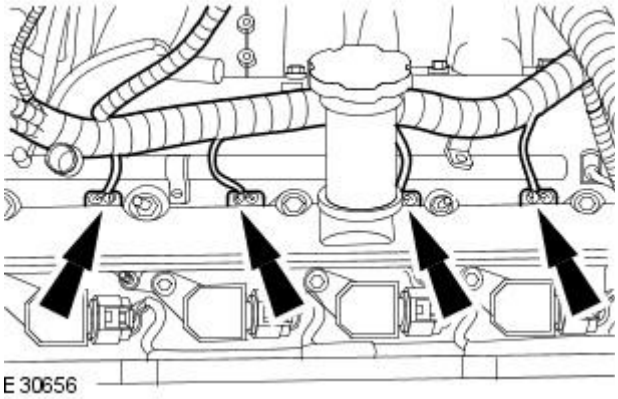


**127.** Attach the engine wiring harness.

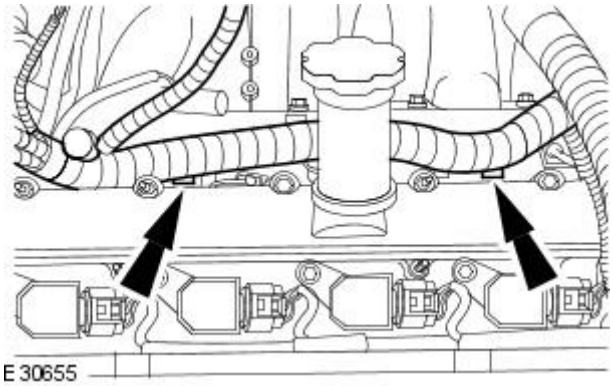


Vehicles without supercharger

**128.** Install the engine cover retaining bracket.

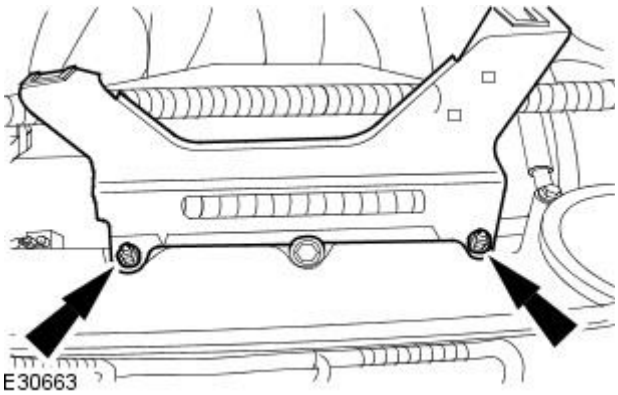


**129.** Install the engine cover retaining bracket.

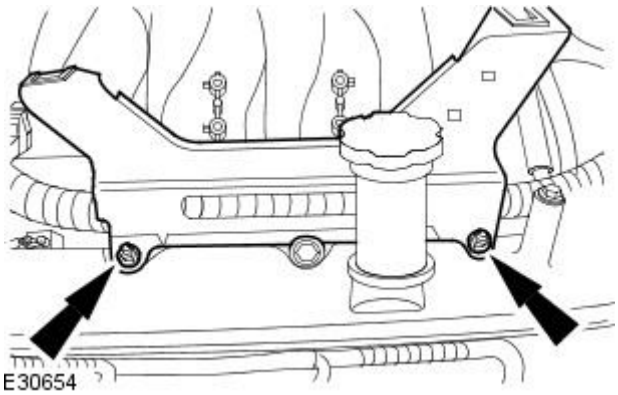


All vehicles

GETtheMANUALS.org

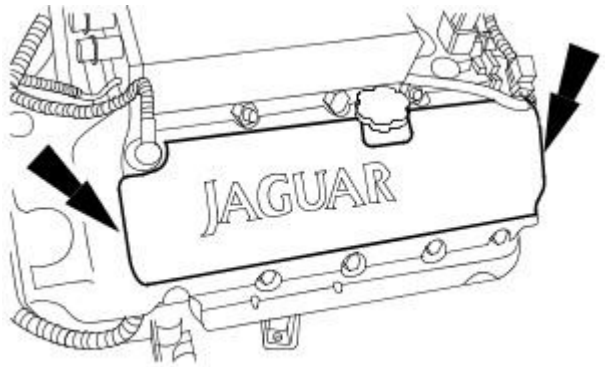

E30653

**130.** NOTE: Left-hand shown,right-hand similar.

Install the ignition coil cover.

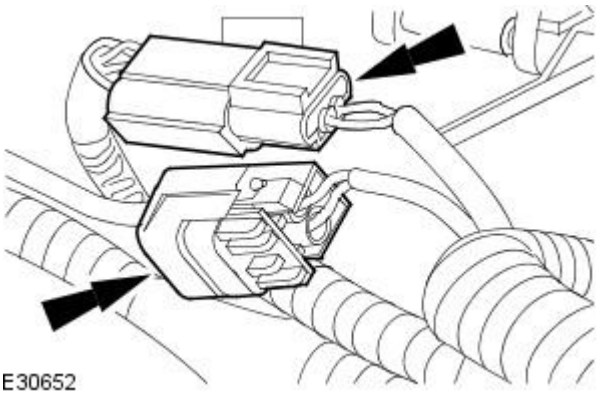
E30652

**131.** Connect the knock sensor electrical connectors.

Vehicles with supercharger

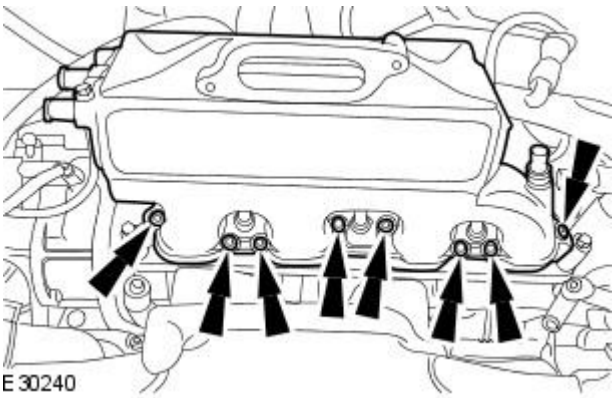
E30240

**132.** Install the charge air cooler.

- Install a new charge air cooler gasket.
- Tighten to 13 Nm.

E30248

**133.** Install the supercharger.

- Tighten to 24 Nm.

GETtheMANUALS.org

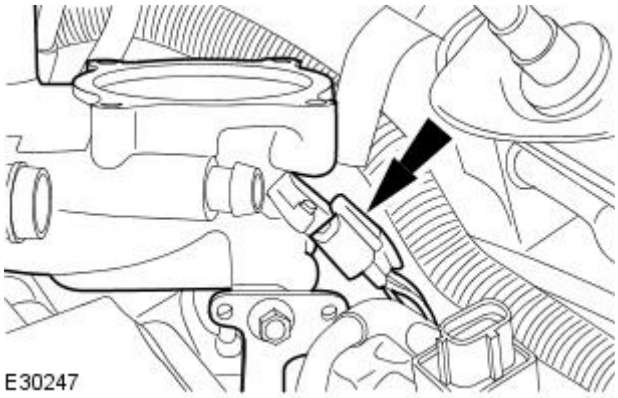


**134.** Connect the manifold absolute pressure (MAP) sensor.

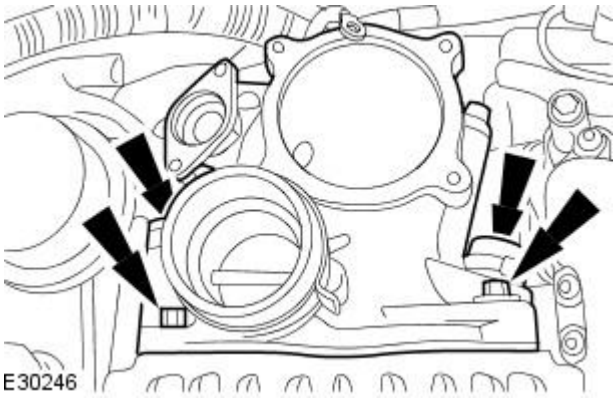


**135.** Install the air intake elbow.

- Install a new gasket.
- Install new retaining bolt seals.
- Tighten to 24 Nm.

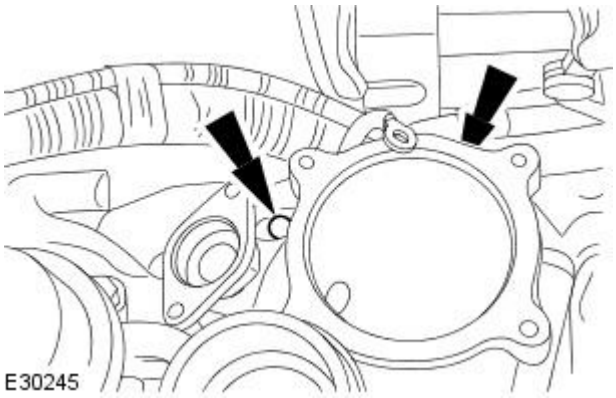


**136.** NOTE: Make sure ground strap is correctly installed to the location noted.

Install the air intake elbow retaining bracket lower retaining bolts.

- Tighten to 20 Nm.

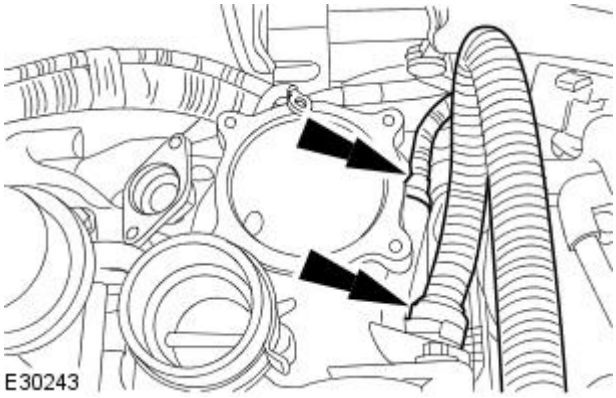


**137.** Connect the air intake elbow pipes.

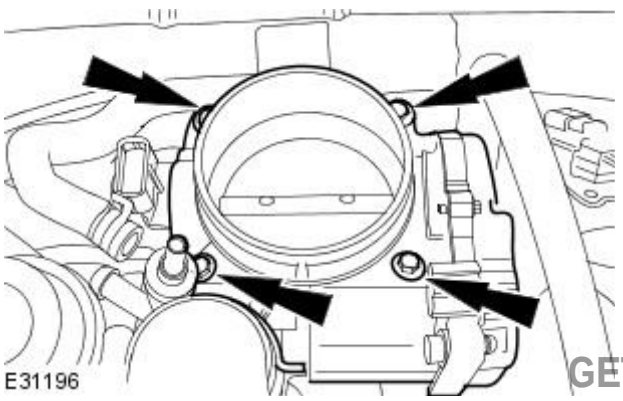


**138.** CAUTION: Do not attempt to clean the throttle body. The bore and the throttle plate has a special coating applied during manufacture which should not be removed.

Install the throttle body.

- Install a new throttle body gasket.
- Tighten to 10 Nm.

GETtheMANUALS.org

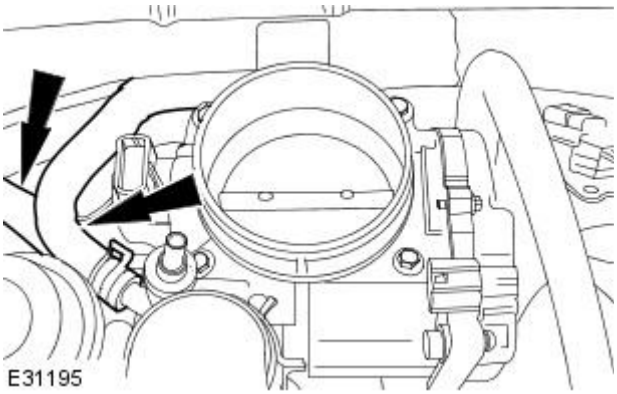


**139.** NOTE: Un-cap the coolant hose.

Attach the coolant hose to the throttle body.

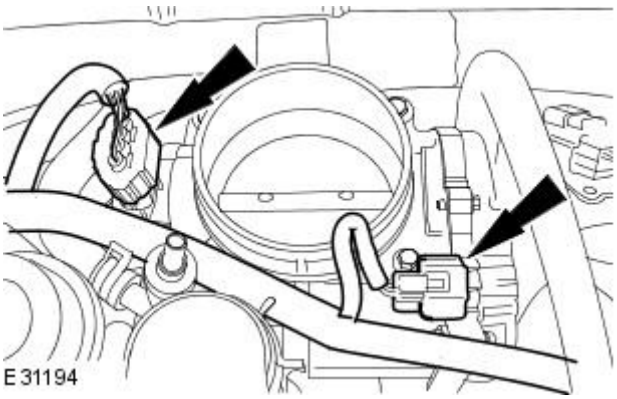


**140.** Connect the electrical connectors.

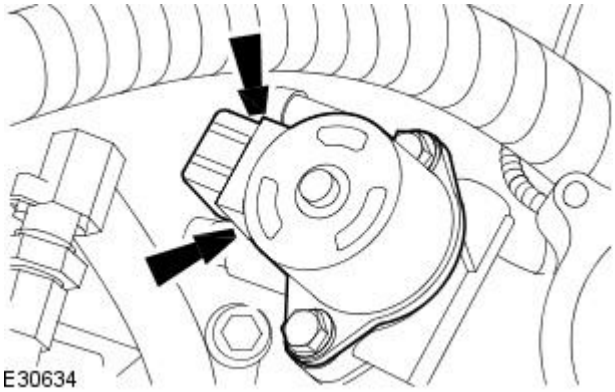


**141.** Install the EGR valve and the exhaust manifold to EGR valve tube.

- Install a new exhaust manifold to EGR valve tube gasket.
- Install a new EGR valve to air intake elbow gasket.
- Tighten to 10 Nm.

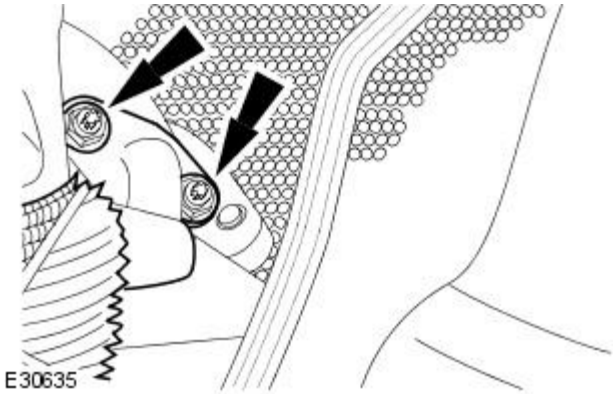


**142.** Tighten to 21 Nm.

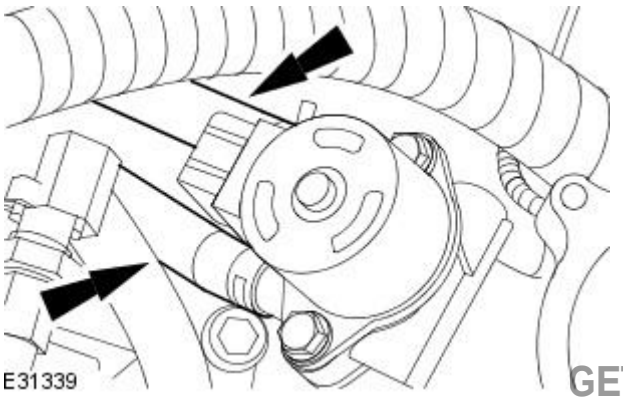


**143.** NOTE: Un-cap the exposed ports.

Connect the coolant hoses.

GETtheMANUALS.org

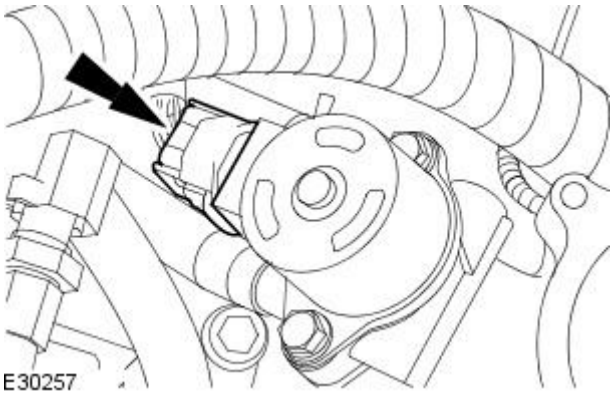


**144.** Connect the exhaust gas recirculation (EGR) valve electrical connector.

**145.** Connect the IAT sensor electrical connector.

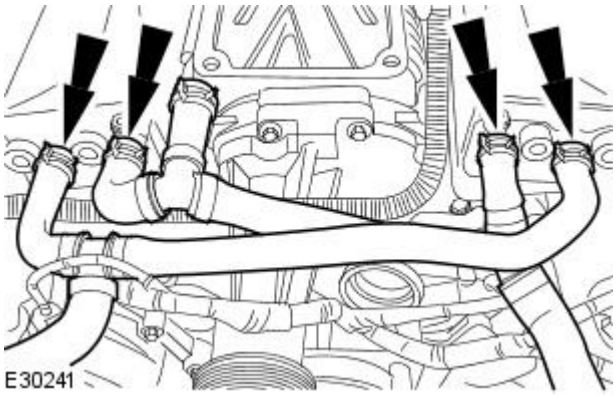


**146.** Connect the charge air cooler coolant pipes.

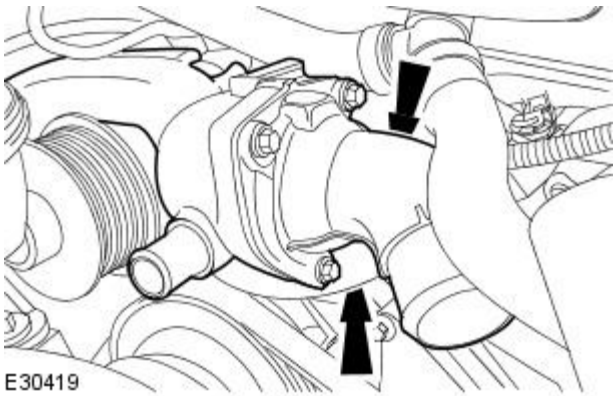


**147.** Install new O-ring seals to the thermostat housing.

**148.** Install thermostat housing.

**149.** Tighten to 10 Nm.

GETtheMANUALS.org

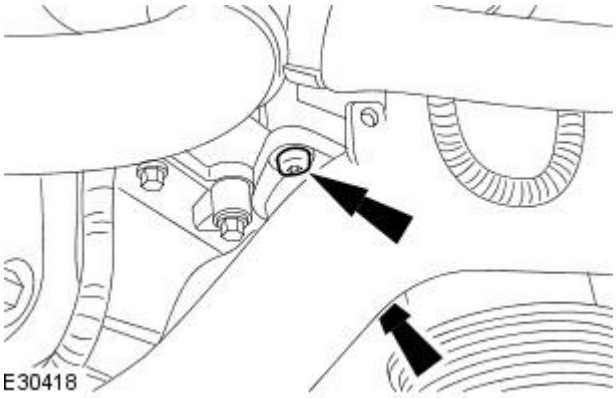


**150.** Tighten to 10 Nm.

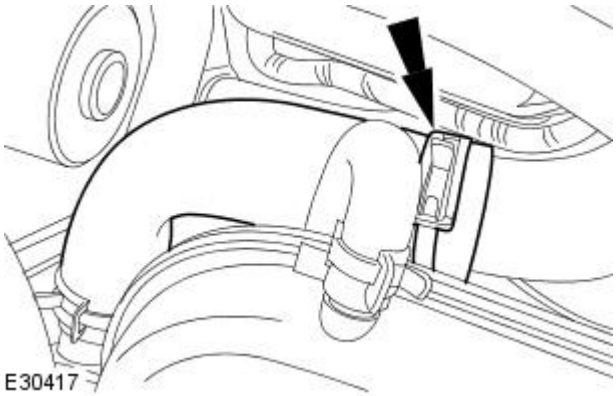


**151.** Connect the hose.

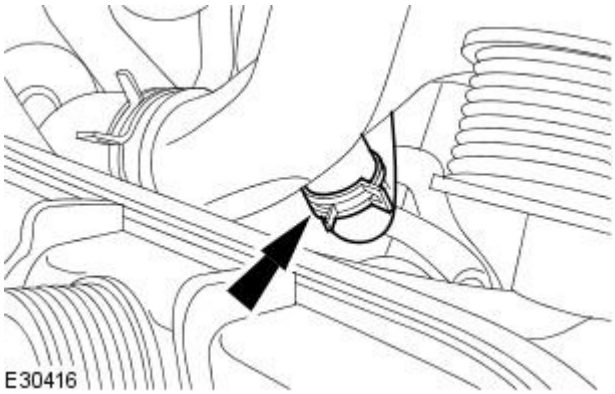


**152.** Connect the hose.

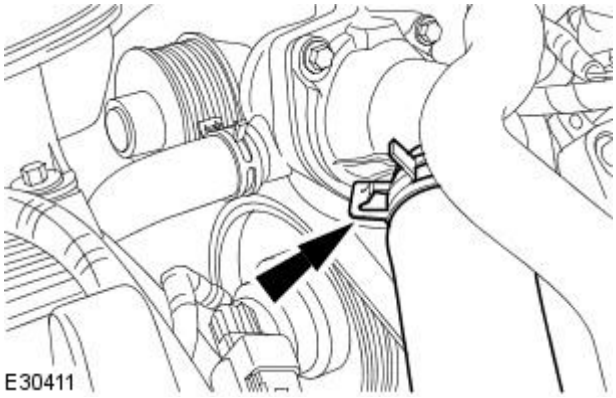


**153.** Connect the hose.

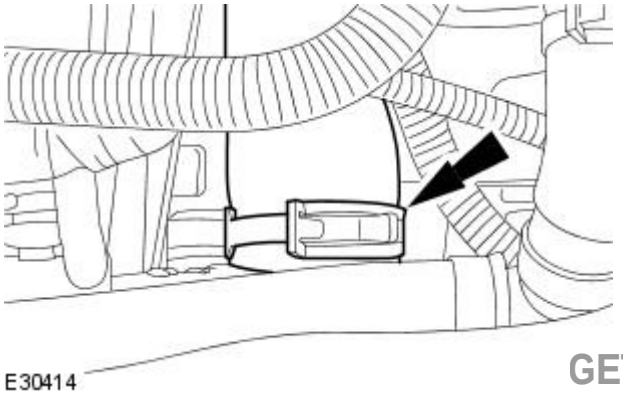


**154.** Reposition the thermostat housing hose retaining clip.

GETtheMANUALS.org

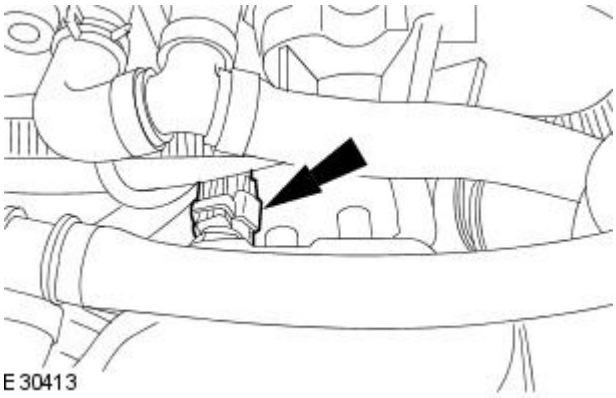


**155.** Connect the coolant temperature sensor electrical connector.

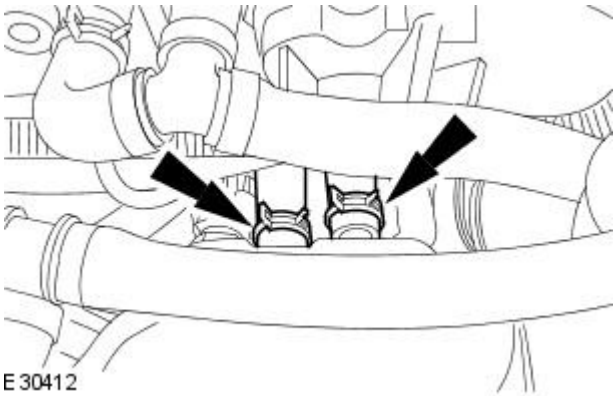


**156.** Connect the thermostat housing hoses

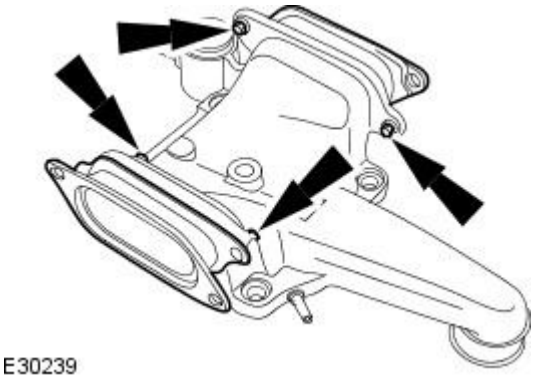


**157.** Install new supercharger outlet pipe to charge air coolers ducts.

- Tighten to 8 Nm.

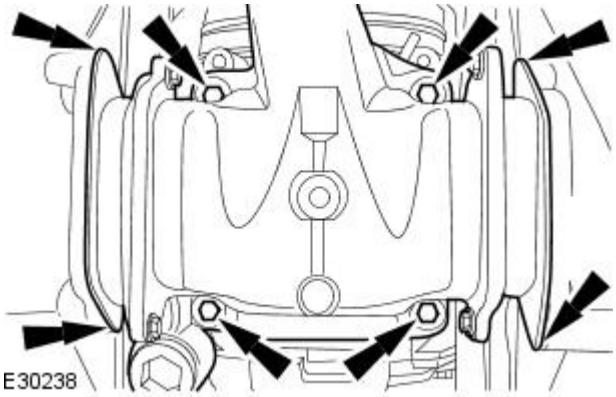


**158.** Install a new supercharger outlet pipe gasket.

**159.** Install new seals to the supercharger outlet pipe retaining bolts

**160.** CAUTION: Make sure no foreign matter enters the supercharger.

Install the supercharger outlet pipe

GETtheMANUALS.org

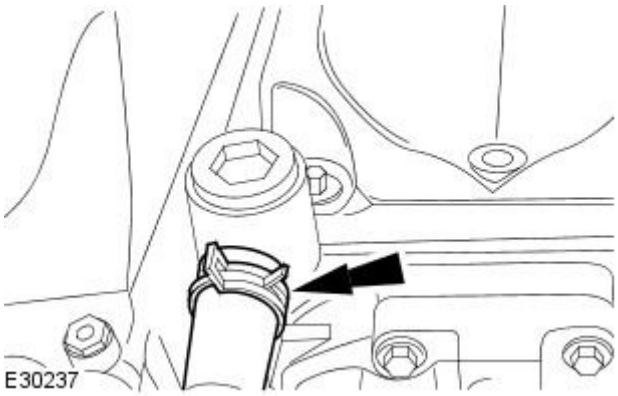


**161.** NOTE: Un-cap the coolant ports.

Attach the supercharger outlet pipe coolant hose.

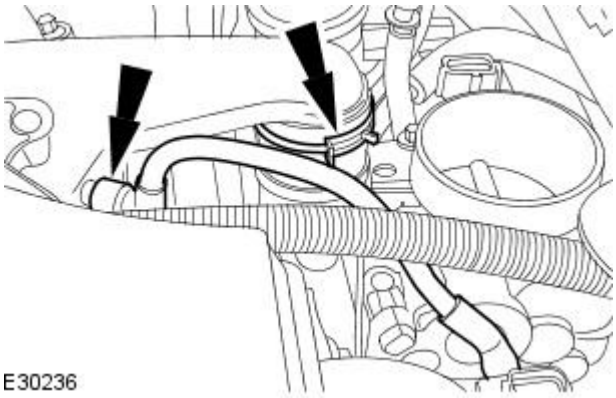


**162.** Attach the hoses.

- Reposition the hose retaining clip.

Vehicles without supercharger

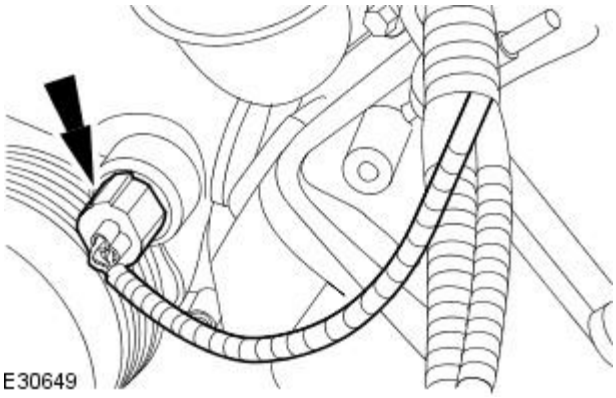


**163.** Disconnect the coolant temperature sensor electrical connector.

All vehicles

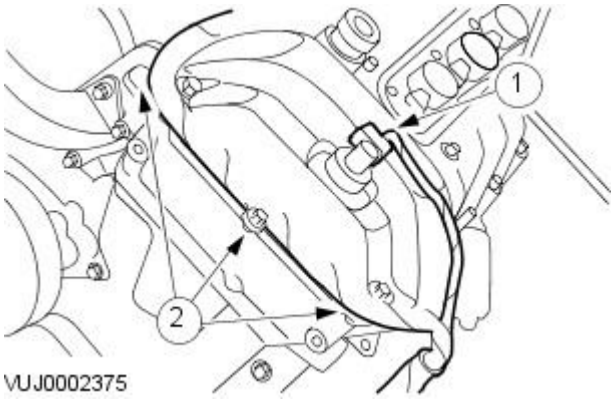


**164.** Attach the engine wiring harness.

1. Connect the variable valve timing (VCT) solenoid electrical connector.
2. Attach the engine wiring harness.

**www.JagDocs.com**

GETtheMANUALS.org

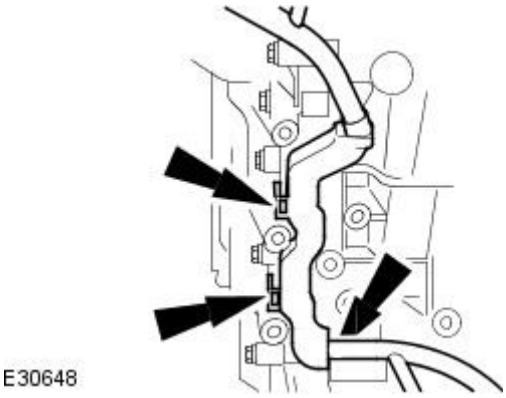


**165.** Attach the engine wiring harness.

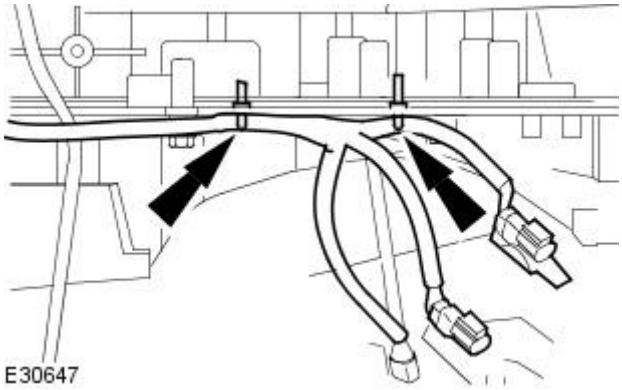


**166.** Attach the engine wiring harness.

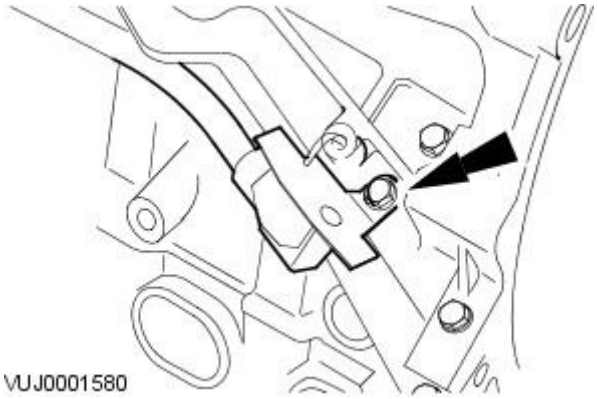


**167.** Attach the engine wiring harness.

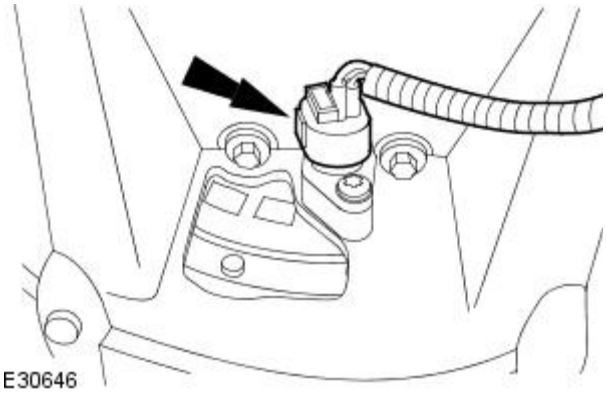


**168.** Connect the crankshaft position sensor electrical connector.

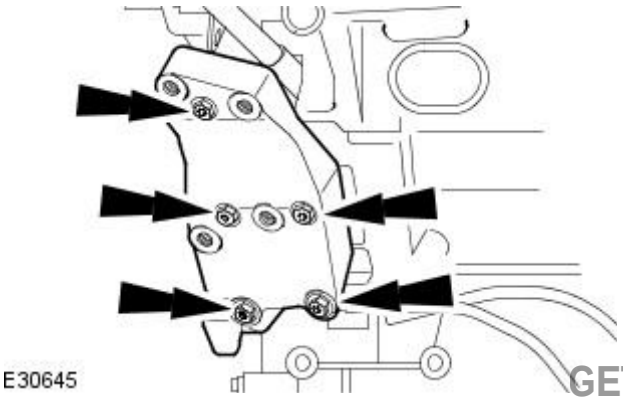


**169.** Install the power steering pump mounting bracket.

- Tighten to 25 Nm.

GETtheMANUALS.org

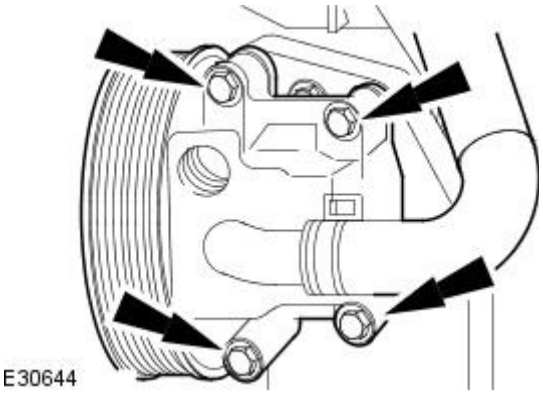


**170.** Install the power steering pump.

- Tighten to 25 Nm.

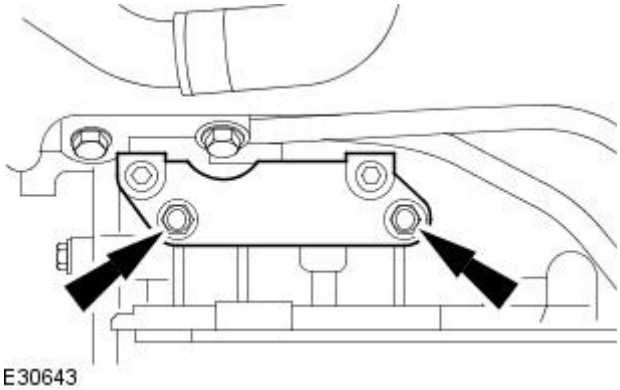


**171.** Install the air conditioning compressor mounting bracket.

- Tighten to 25 Nm.

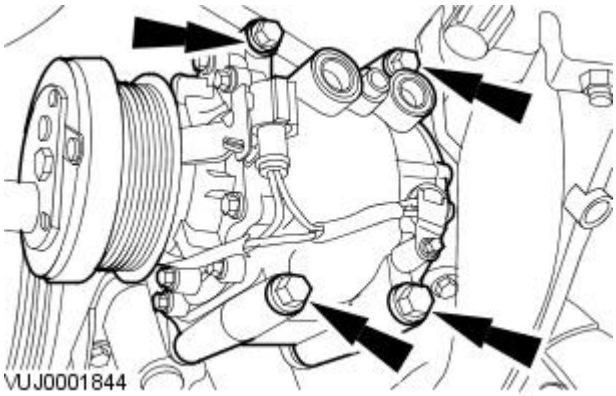


**172.** Install the A/C compressor.

- Tighten to 25 Nm.

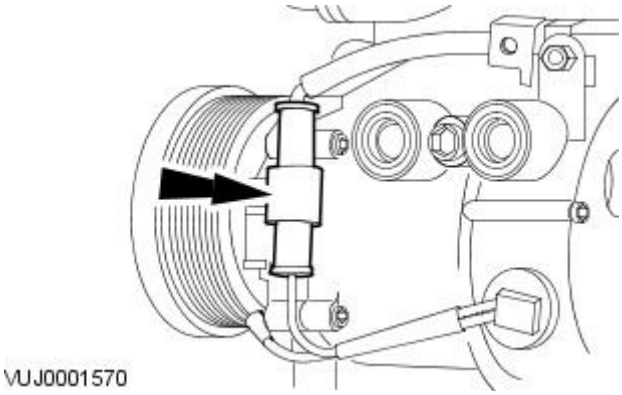


**173.** Connect the air conditioning compressor electrical connector.

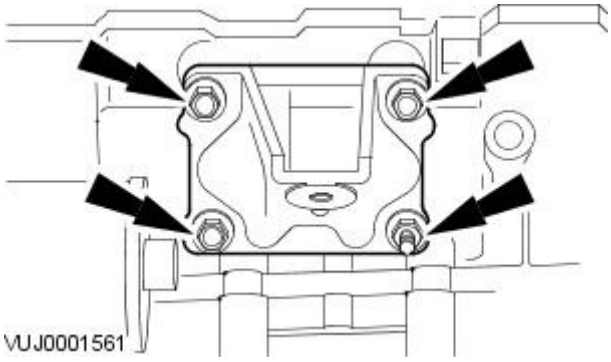


**174.** Install the left-hand engine mounting bracket.

- Tighten to 25 Nm.

GETtheMANUALS.org

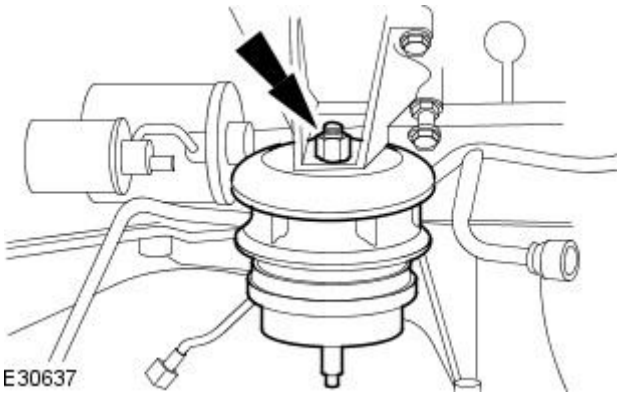


**175.** Install the left-hand engine mount.

- Tighten to 43 Nm.

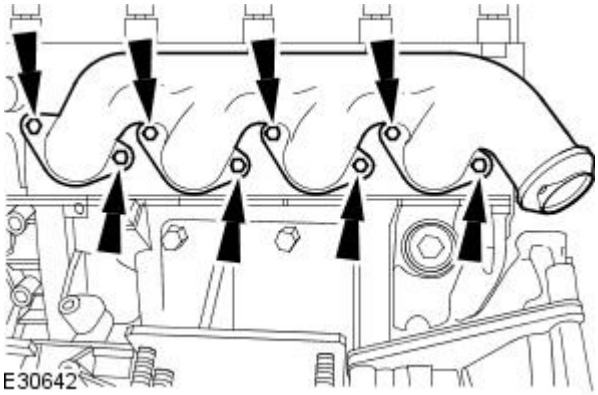


**176.** CAUTIONS:

Make sure the exhaust manifold and gasket are correctly aligned to the cylinder head.

Make sure the exhaust manifold torque is checked after initial tighten.

Install the left-hand exhaust manifold.

- Install a new gasket.
- Tighten to 20 Nm.

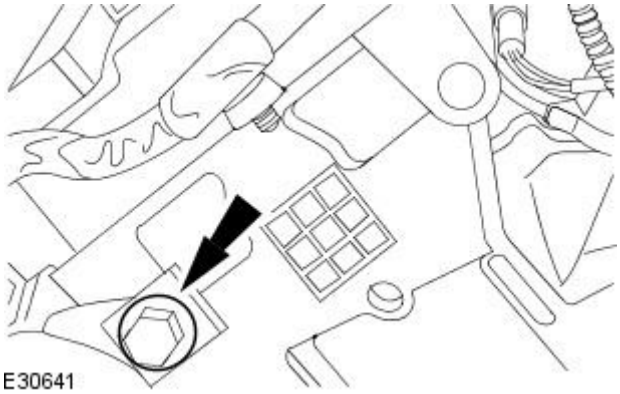


**177.** Remove the heat shield retaining bolt.

- Tighten to 50 Nm.

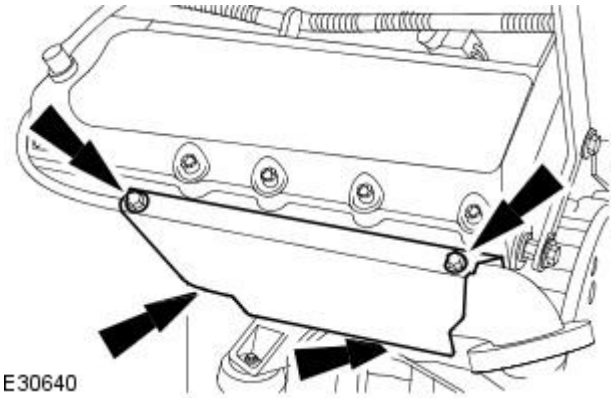


**178.** Install the heat shield.

- Tighten to 3 Nm.

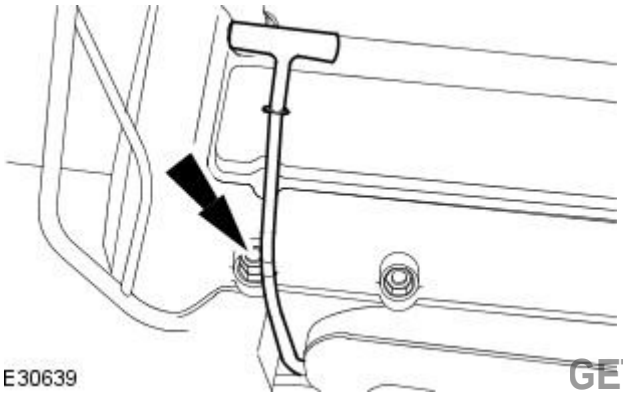


**179.** Remove the oil level indicator and tube.

- Install a new O-ring seal.
- Tighten to 6 Nm.

GETtheMANUALS.org

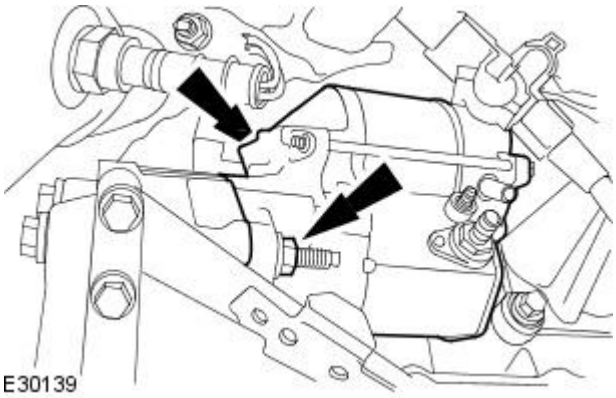


**180.** Install the starter motor.

- Tighten to 45 Nm.

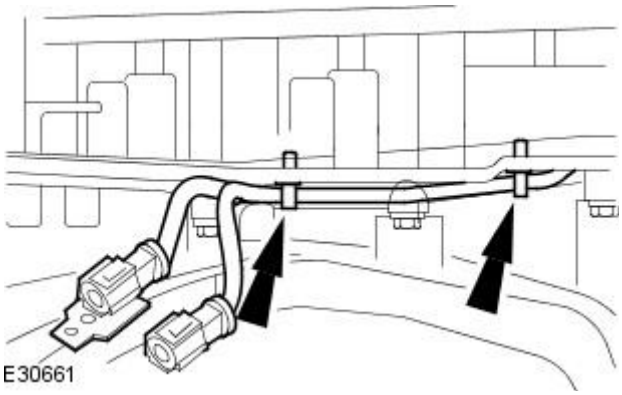


**181.** Attach the engine wiring harness.

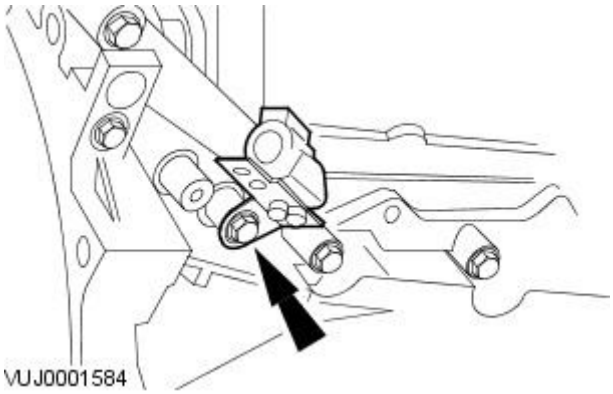


**182.** Attach the right hand oxygen sensor retaining bracket.

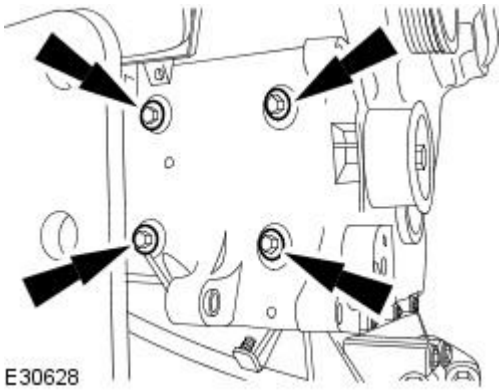


**183.** Install the generator mounting bracket.

- Tighten to 45 Nm.

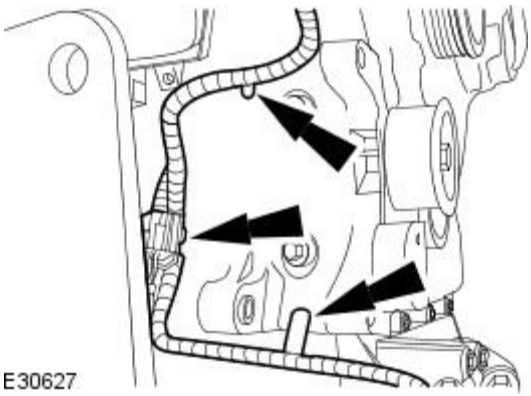


**184.** Attach the engine wiring harness.

GETtheMANUALS.org

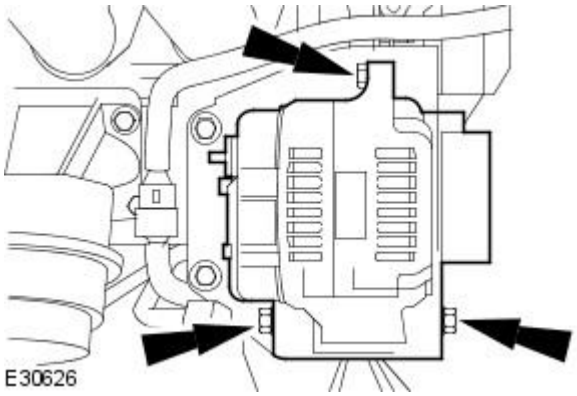


**185.** Install the generator.

- Tighten the generator upper retaining bolt to 21 Nm.
- Tighten the generator lower retaining bolt to 40 Nm.

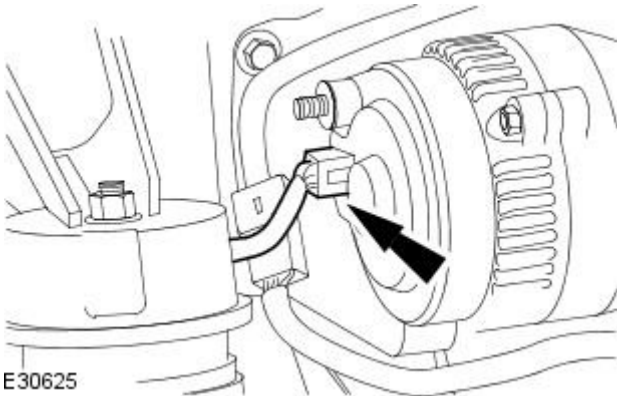


**186.** Connect the generator electrical connector.

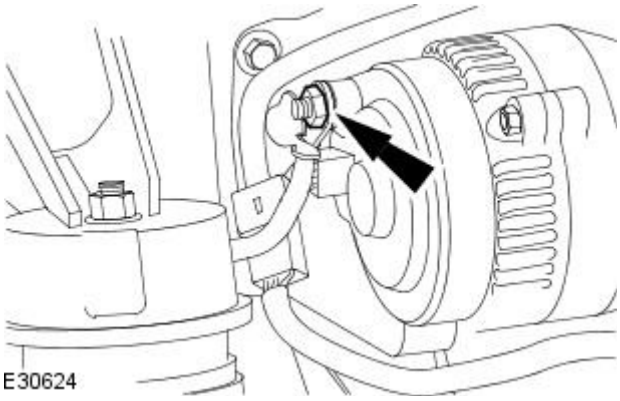


**187.** Install the wiring harness.

- Tighten to 12 Nm.

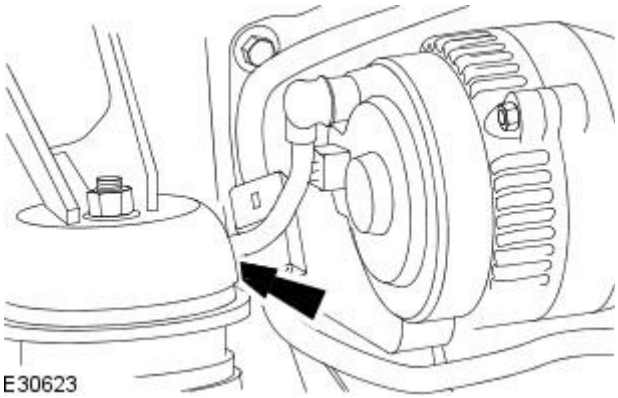


**188.** Attach the wiring harness.

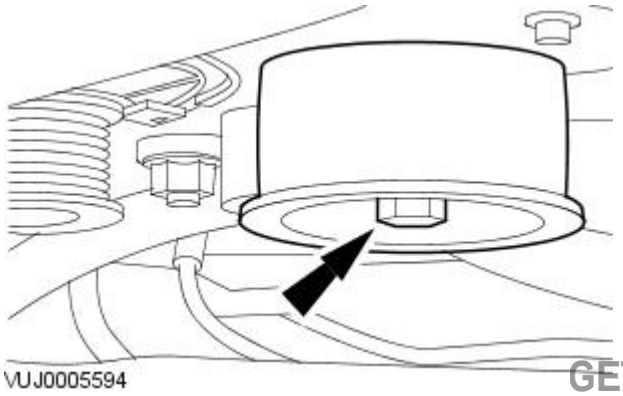


**189.** Install the accessory drive belt idler pulley.

- Tighten to 25 Nm.

GETtheMANUALS.org

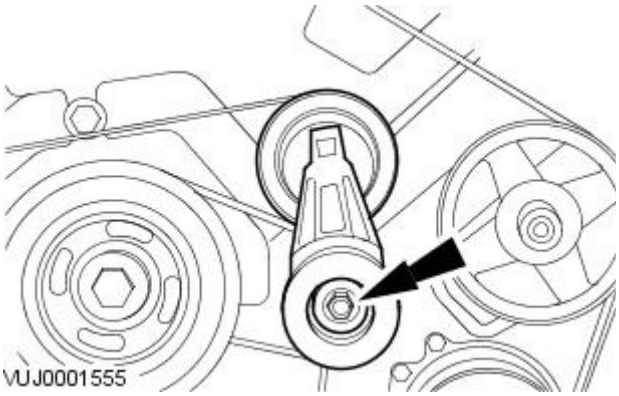


**190.** Install the accessory drive belt tensioner.

- Install the accessory drive belt.
- Tighten to 45 Nm.

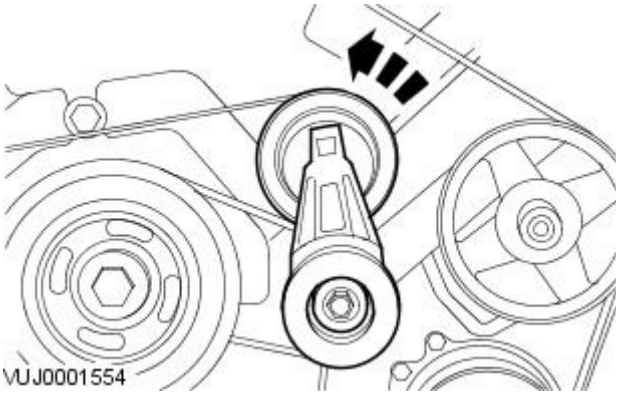


**191.** Release the accessory drive belt tension.

- Attach the accessory drive belt.

Vehicles with supercharger

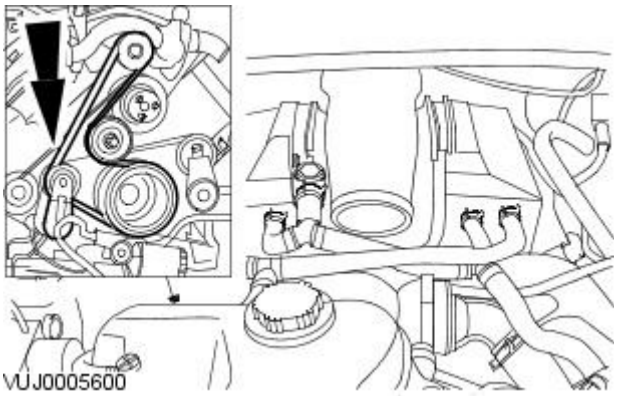


**192.** Install the supercharger belt.

- Use a 1/2 inch square drive bar to rotate the supercharger belt tensioner.

Vehicles without supercharger

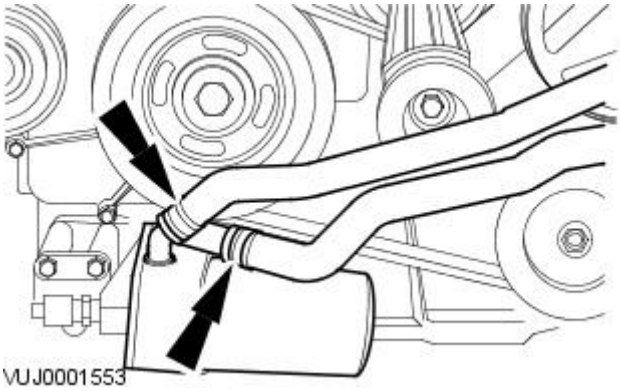


**193.** Connect the oil cooler hoses.

GETtheMANUALS.org

# Engine - V8 4.2L Petrol / V8 S/C 4.2L Petrol - Engine

Installation

| Special Tool(s) | |
|---|---|
| 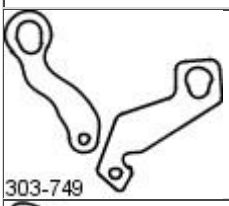 303-749 | Engine lifting brackets<br><br>303749 |
| 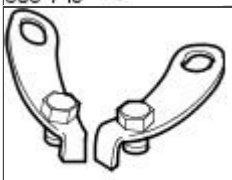 303-536 | Engine lifting brackets<br><br>303536 |
| 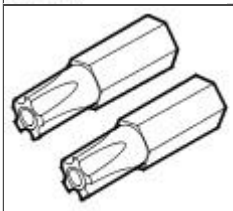 418-535 | 5 point security torx bit<br><br>418-535 |

## Installation

All Vehicles

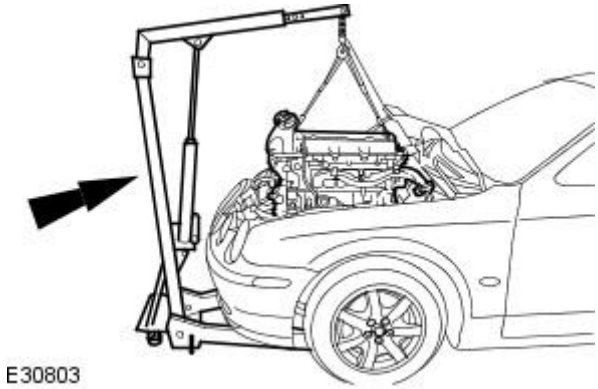
E30803

**1.** Install the engine using suitable hydraulic lift.

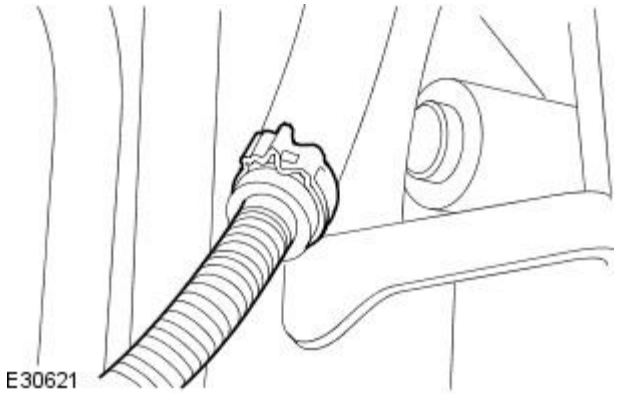
E30621

**2.** Attach fuel purge line.

- Install a new retaining clip.

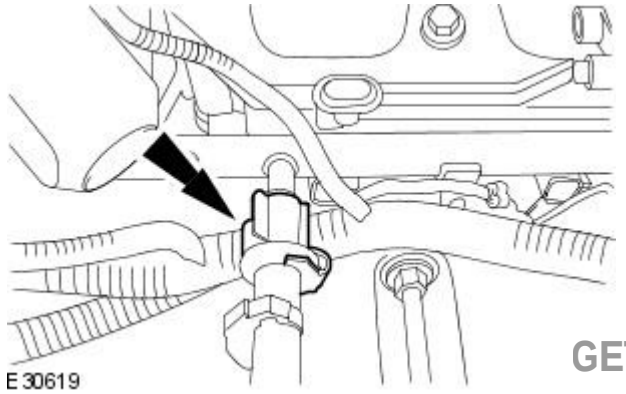
E30619

**3.** Connect the fuel line.

- Attach the fuel line retaining clip.
- Install new O-ring seals.

GETtheMANUALS.org

Vehicles without supercharger

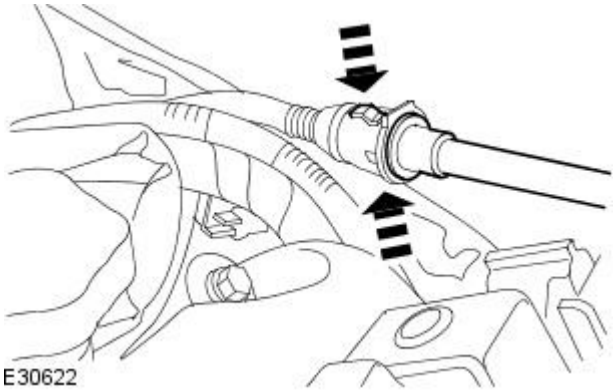


**4.** Attach the brake booster vacumn pipe.

Vehicles with supercharger

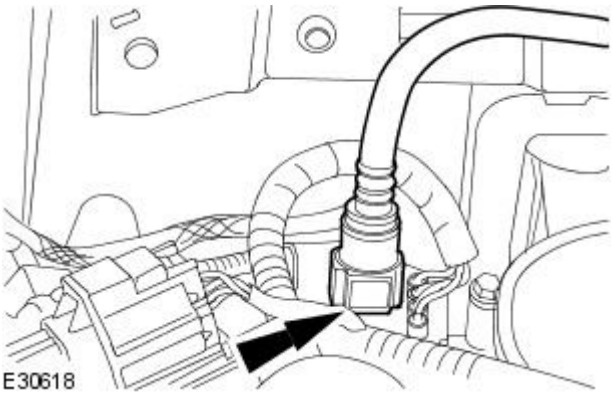


**5.** Attach the brake booster vacumn pipe.

All Vehicles

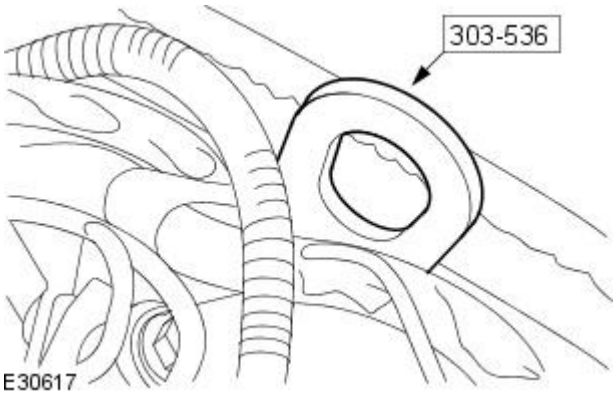


**6.** Remove the left hand rear engine lifting bracket.

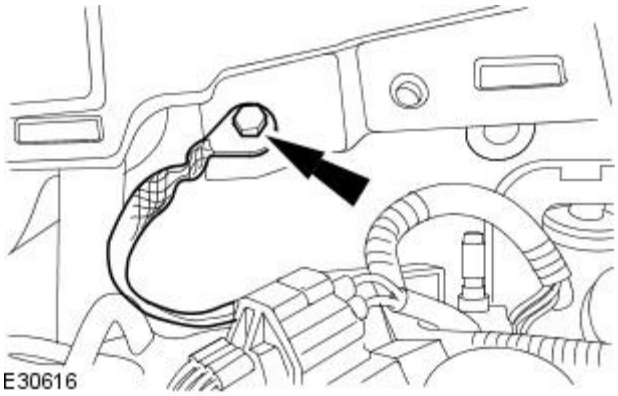


**7.** Attach the bulkhead ground cable.

GETtheMANUALS.org

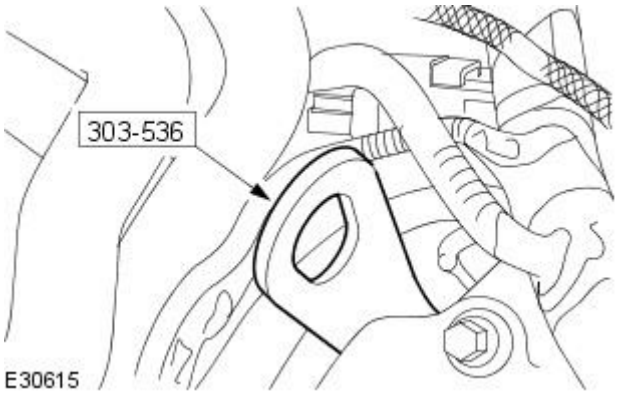


**8.** Remove the right hand rear engine lifting bracket.

Vehicles with supercharger

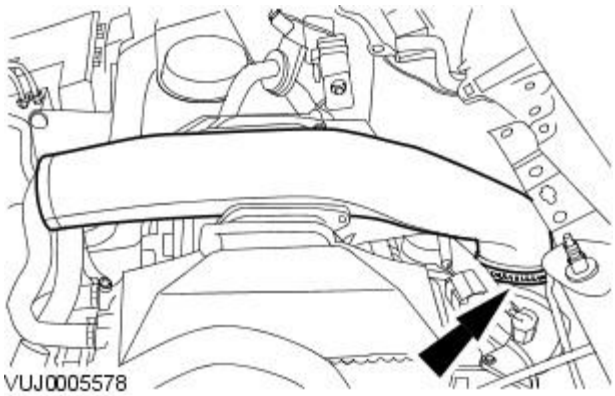


**9.** Install the air intake tube.

**10.** Install the air cleaner. For additional information, refer to Section 303-12A Intake Air Distribution and Filtering / 303-12B Intake Air Distribution and Filtering / 303-12C Intake Air Distribution and Filtering.

All vehicles

**11.** Install the power steering fluid reservoir
For additional information, refer to Section 211-02 Power Steering.

**12.** Install the air cleaner For additional information, refer to Section 303-12A Intake Air Distribution and Filtering / 303-12B Intake Air Distribution and Filtering / 303-12C Intake Air Distribution and Filtering.

**13.** Attach the engine harness electrical connector.

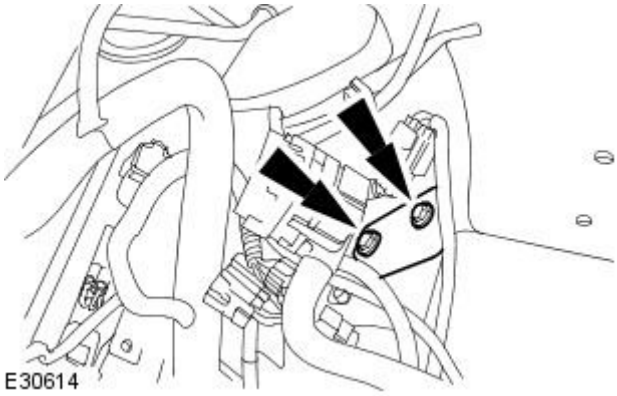


**14.** Connect the engine harness electrical connector.

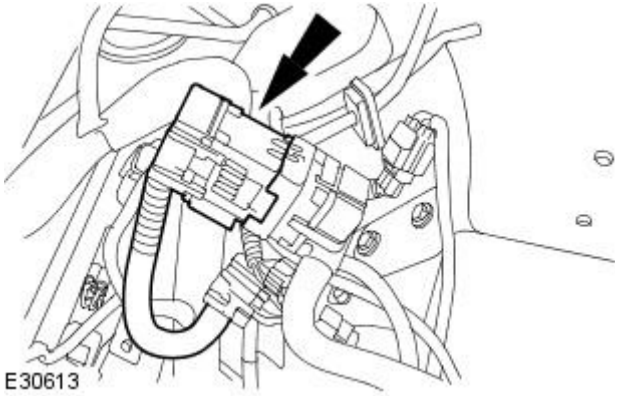


GETtheMANUALS.org

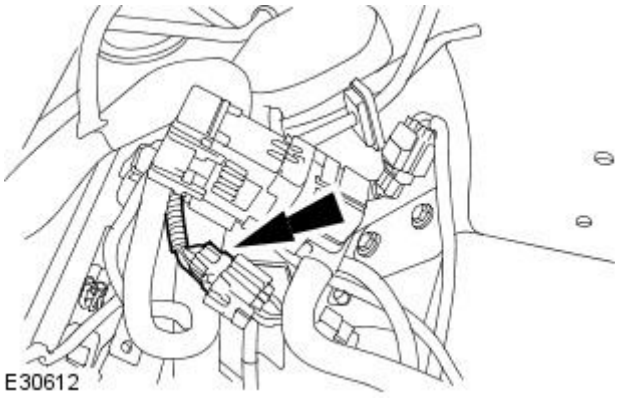


**15.** Connect the engine harness electrical connector.

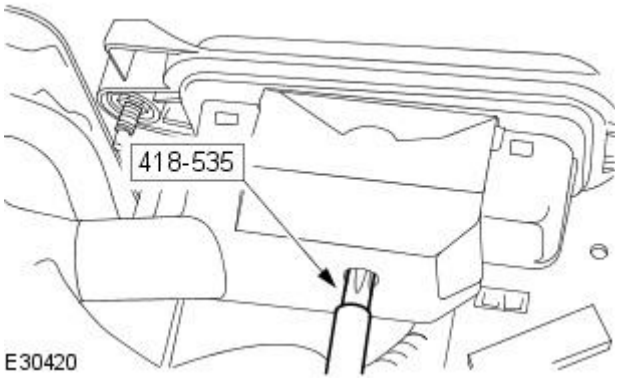


**16.** Connect the engine control module (ECM) electrical connector.

- Tighten to 6 Nm.

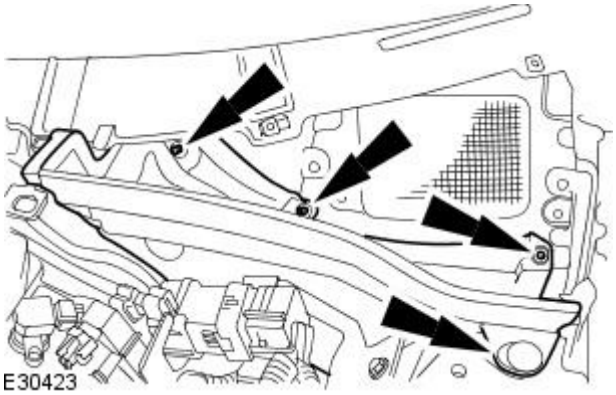


**17.** Install the engine compartment panel.

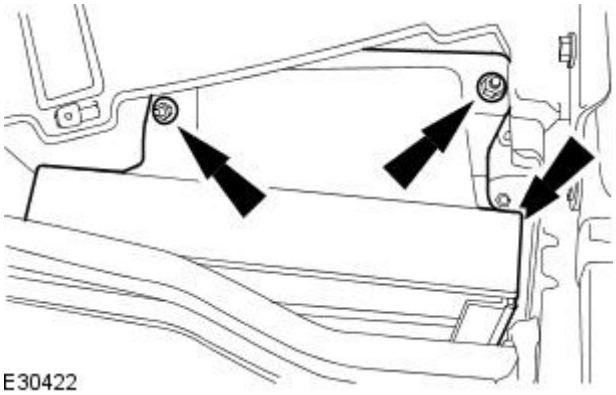


**18.** Install the cabin air filter housing.

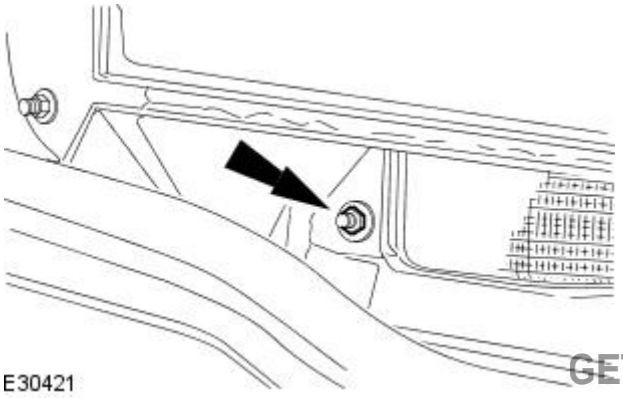


**19.** Install the cabin air filter housing retaining nut.

GETtheMANUALS.org

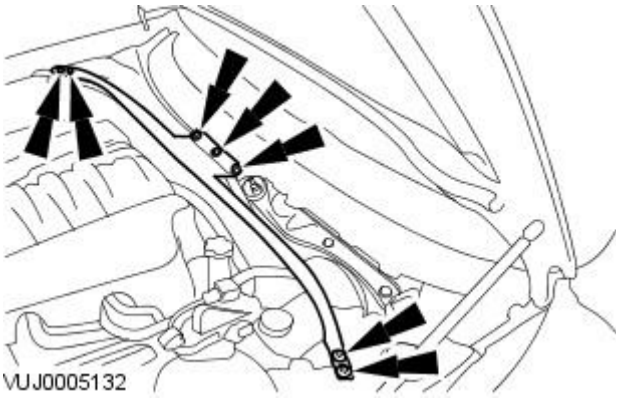


**20.** Install the engine compartment support.

**21.** Install the cabin air filter.
For additional information, refer to Section 412-01 Air Distribution and Filtering.

**22.** Install the radiator assembly. For additional information, refer to Section 303-03A Engine Cooling / 303-03B Supercharger Cooling / 303-03C Engine Cooling.

**23.** Install the hood.
For additional information, refer to Section 501-3 .

**24.** Raise the vehicle.

**25.** Attach the ground cable.

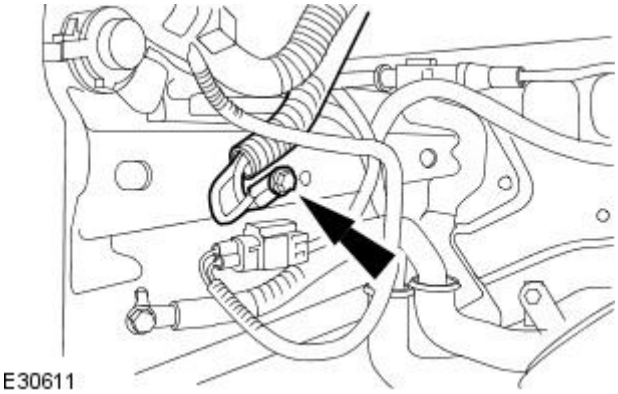


**26.** Install the right hand fender splash shield.

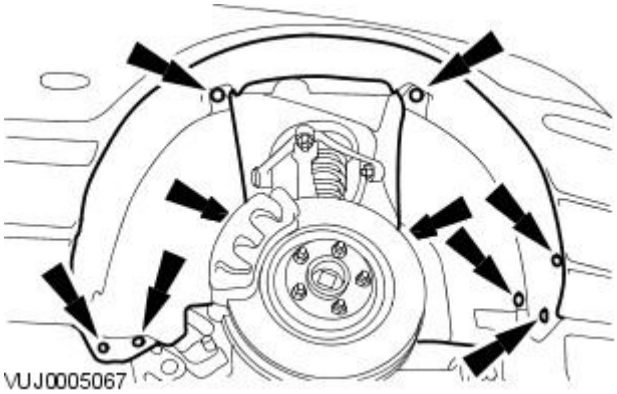


**27.** Install the right hand wheel and tire assembly.

**28.** NOTE: Un-cap the exposed ports.

Install new A/C compressor O-ring seals.

- Lubricate the new O-rings with A/C refrigerant oil.

GETtheMANUALS.org

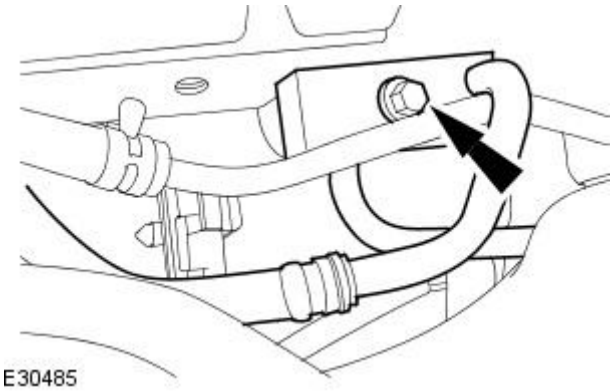


**29.** Connect the A/C compressor supply and return lines.

- Tighten to 20 Nm.

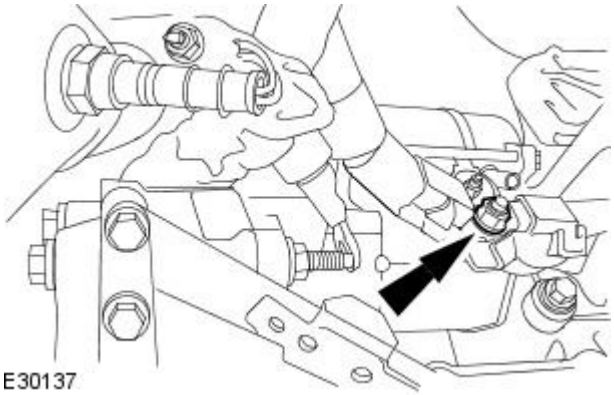


**30.** Tighten to 10 Nm.

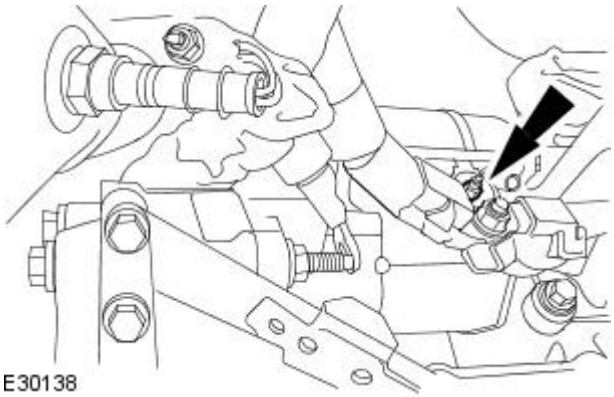


**31.** Tighten to 7 Nm.

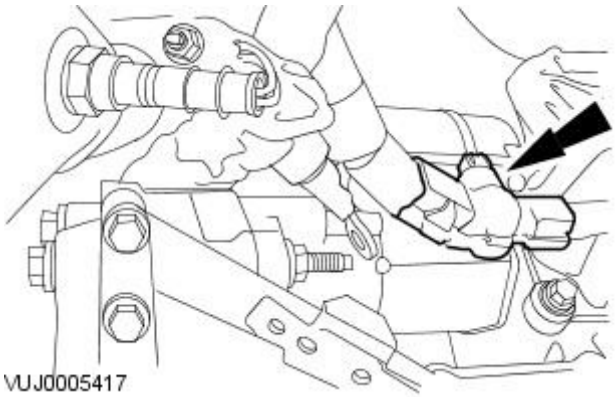


**32.** Attach the starter motor positive cable cover.

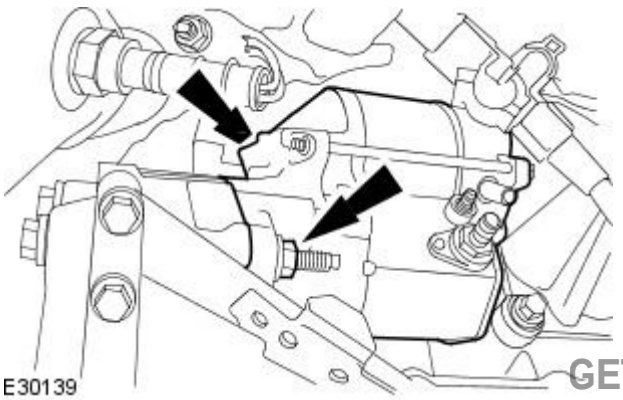


**33.** Tighten to 45 Nm.

GETtheMANUALS.org

Vehicles with supercharger

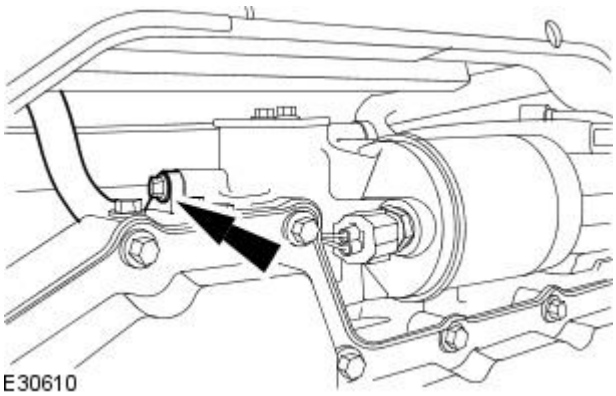


**34.** Tighten to 12 Nm.

- Install new O rings.

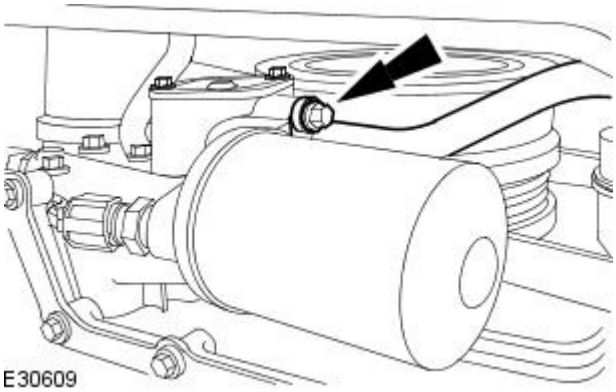


**35.** Tighten to 12 Nm.

- Install new O rings.

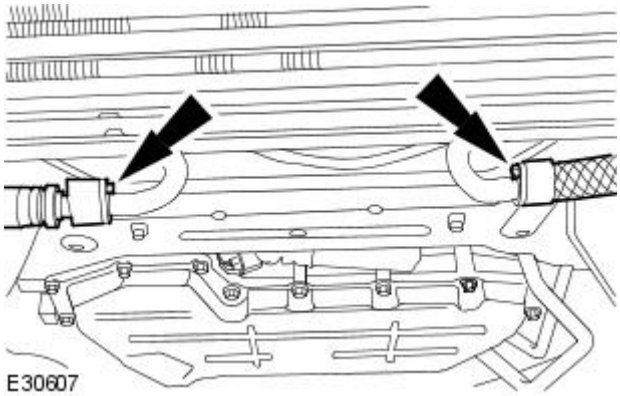


**36.** Tighten to 12 Nm.

- Install new O rings.

All vehicles

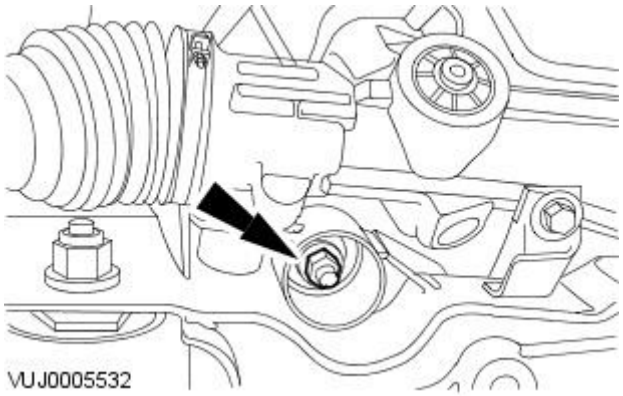


**37.** NOTE: Left hand shown, right hand similar.

Tighten to 63 Nm.

**38.** Install the automatic transmission
For additional information, refer to Section 307-01 Automatic Transmission/Transaxle.

**39.** Carry out the A/C system evacuation and charging procedure.
For additional information, refer to Section 412-00 Climate Control System - General Information.

**40.** Carry out the A/C system flourescent dye leak detection procedure.
For additional information, refer to Section 412-00 Climate Control System - General Information.

GETtheMANUALS.org

# Engine - 2.7L V6 - TdV6 -

**Lubricants, Fluids, Sealers and Adhesives**

| Description | Specification |
|---|---|
| Engine oil, SAE 5W-30 | WSS-M2C-913B A1 |
| Sealant | WSE M4G323–A4 (Loctite 5910) |
| Sealant (camshaft caps) | ESK M4G269–A (Loctite 518) |
| Hose assembly surfactant | WSE N99C45–A2 |

**General Specifications**

| Maximum permissible cylinder head warp | |
|---|---|
| Total flame face | 0.1 mm |
| 150 mm x 150 mm square on flame face | 0.05 mm |
| 25 mm x 25 mm square on flame face | 0.025 mm |

**Capacities**

| Description | Liters |
|---|---|
| Engine oil, initial fill | 7·7 |
| Engine oil, service fill with oil filter change | 6·6 |

**Torque Specifications**

| Description | Nm | lb-ft | lb-in |
|---|---|---|---|
| Accessory drive belt idler pulley retaining bolt | 47 | 35 | – |
| Accessory drive belt idler pulley mount bracket retaining bolts | 80 | 59 | – |
| Accessory drivebelt tensioner retaining bolt | 47 | 35 | – |
| Air conditioning compressor retaining bolts | 25 | 18 | – |
| Air conditioning compressor mounting bracket retaining bolts | 25 | 18 | – |
| A/C manifold retaining bolt | 20 | 15 | – |
| Camshaft bearing caps retaining bolts | A | – | – |
| Camshaft position sensor retaining bolt | 10 | – | 89 |
| Camshaft hub retaining bolts | A | – | – |
| Camshaft pulley retaining bolts | 23 | 17 | – |
| Crankshaft pulley retaining bolt | A | – | – |
| Crankshaft position sensor retaining bolt | 5 | – | 44 |
| Coolant inlet housing | 10 | – | 89 |
| Cylinder head retaining bolts | A | – | – |
| Engine mount retaining nuts to crossmember | 63 | 46 | – |
| Engine mount bracket to engine mount retaining nut | 48 | 35 | – |
| Engine mount bracket to engine block retaining bolts | 90 | 66 | – |
| Engine wiring harness retaining bracket | 4 | – | 35 |
| Exhaust manifold heat shield retaining bolts | 10 | – | 89 |
| Exhaust manifold retaining bolts | 23 | 17 | – |
| Flexplate retaining bolts | A | – | – |
| Fuel injection pump | 23 | 17 | – |
| Fuel injection pump pulley retaining nut | 50 | 37 | – |
| Fuel injector retaining bolts | 10 | – | 89 |
| Generator retaining bolts | 47 | 35 | – |
| Generator mount bracket retaining bolts | 23 | 17 | – |
| Glow plugs | 10 | – | 89 |
| Knock sensor retaining nuts | 20 | 15 | – |
| Oil cooler to cylinder block retaining bolt | 10 | – | 89 |
| Oil level indicator tube retaining bolt | 10 | – | 89 |
| Oil pan retaining bolts | 10 | – | 89 |
| Oil pump to engine block retaining bolts | 10 | – | 89 |
| Oil pan drain plug | 25 | 18 | – |
| Oil separator pipe retaining bolts | 10 | – | 89 |
| Oil filter | 25 | 18 | – |
| Piston cooling jet retaining bolt | 10 | – | 89 |
| Power steering bracket retaining bolts | 23 | 17 | – |
| Power steering pump retaining bolts | 22 | 16 | – |
| Primary timing chain tensioner retaining bolts | 12 | 9 | – |
| Starter motor retaining bolts | 48 | 35 | – |
| Timing belt tensioner retaining bolt | 24 | 18 | – |
| Timing belt idler pulley retaining bolt | 45 | 33 | – |
| Water pump retaining bolts | 10 | – | 89 |
| Water pump pulley retaining bolts | 24 | 18 | – |
| Water pump outlet pipe retaining bolts | 10 | – | 89 |
| Valve cover retaining bolts | 10 | – | 89 |
| Vacuum pump retaining bolts | 23 | 17 | – |
| Vacuum pump retaining nuts | 13 | 10 | – |

GETtheMANUALS.org

# Engine - 2.7L V6 - TdV6 - Engine

Description and Operation

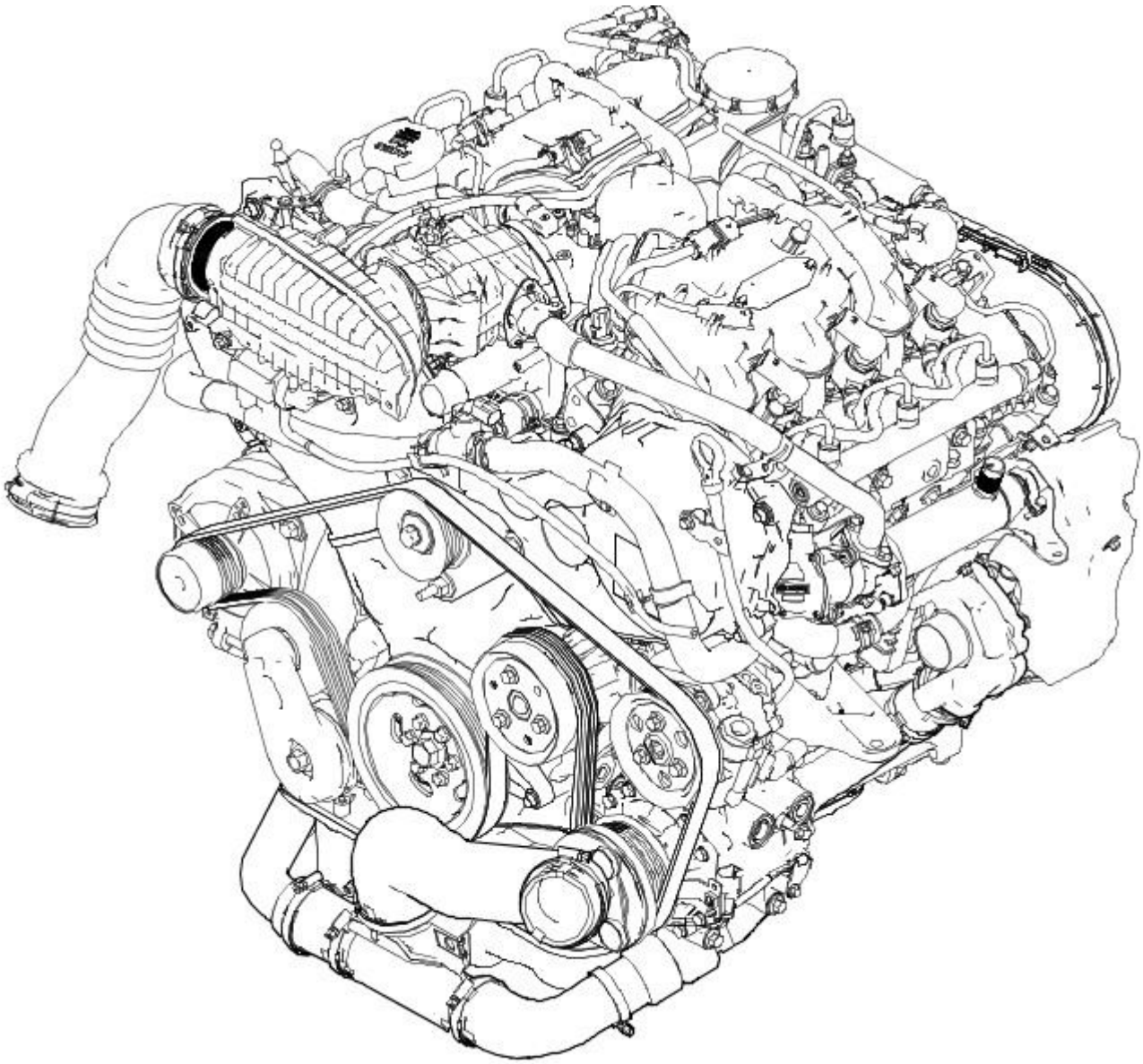

E52128

The 2.7 litre engine consists of a six cylinder 60-degree 'Enclosed Vee' configuration liquid cooled Compacted Graphite Iron (CGI) with the cylinder bores machined directly into the block.

Viewed from the driving position, the right-hand cylinder bank is numbered 1 to 3, from the front of the vehicle and the left-hand cylinder bank are numbered 4 to 6, from the front of the vehicle.

Knock Sensors

The knock sensor registers increased vibrations which occur due to increased combustion noise. The ECM uses the signal as a correction factor for calculating the quantity of fuel to be injected during the injection phase.

## Crankshaft

GETtheMANUALS.org

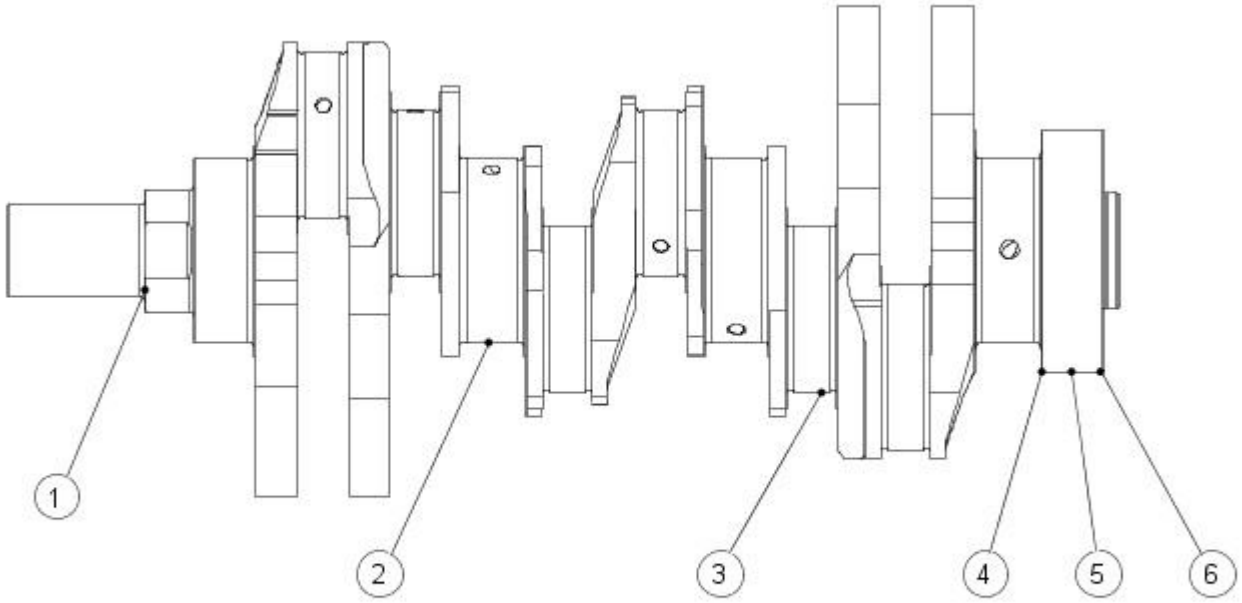


E52135

| Item | Part Number | Description |
|---|---|---|
| 1 | — | Oil pump drive |
| 2 | — | Main bearing journal |
| 3 | — | Big end journal |
| 4 | — | Rear drive flange |
| 5 | - | Rear oil seal location |
| 6 | - | Trigger wheel location |

The crankshaft is forged steel and fillet rolled with induction hardened journals, which run in four bearings with clamped two layer bearing shells. The upper and lower shells of bearing number four are flanged, which limits the end float of the crankshaft. The main bearing caps are double bolted and cross bolted to increase the strength and rigidity of the engine block.

The rear main oil seal and retainer assembly is a one piece unit and is supplied with its own plastic fitting sleeve. The seal and retainer have two locating dowels and ten fixing bolts. In addition the retainer has a location for the crankshaft position sensor.

A torsional vibration crankshaft damper pulley is bolted to the front of the crankshaft.

The crankshaft trigger wheel is located on the rear of the crankshaft. It is pressed onto the crank using a special tool which also precisely aligns the trigger wheel for crankshaft position and timing. The trigger wheel consists of 60 magnets minus two for ECM crankshaft position reference and synchronisation. The magnets cannot be seen on the trigger wheel, which therefore can only be positioned using a special tool.

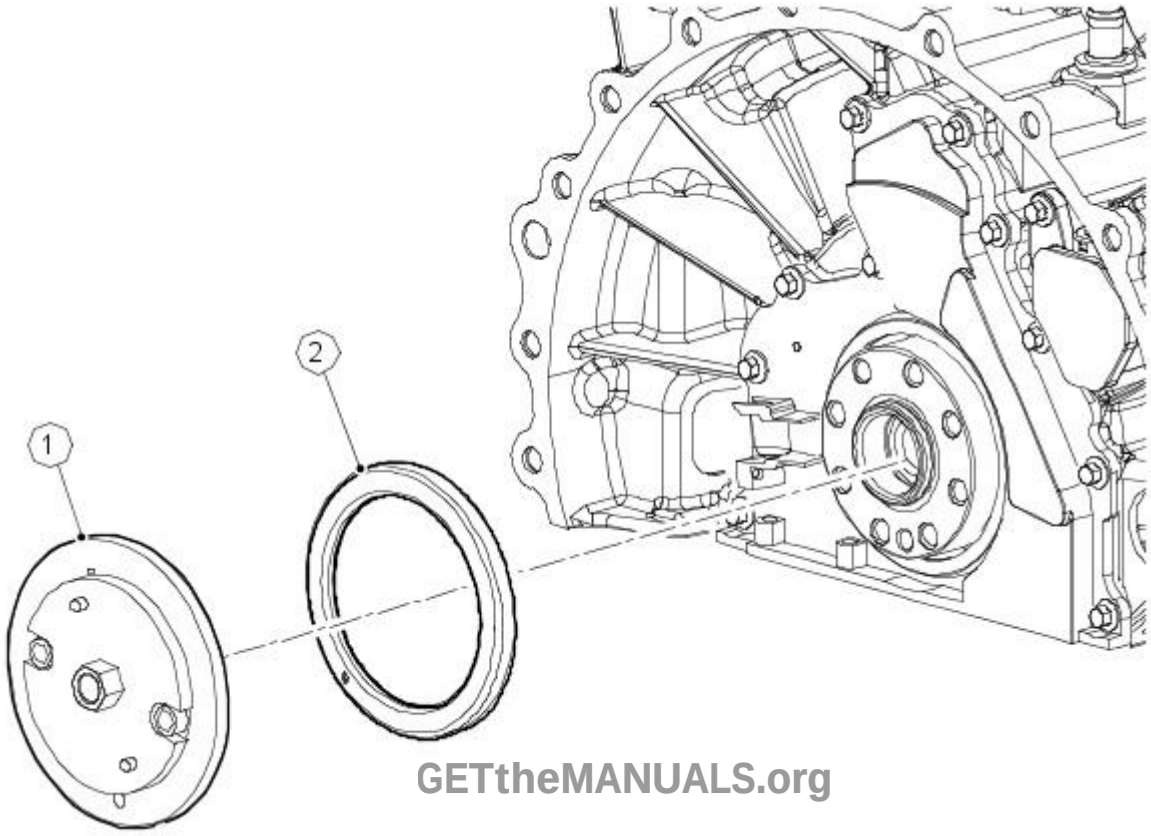


GETtheMANUALS.org

E52137

| Item | Part Number | Description |
|---|---|---|
| 1 | — | Special tool |
| 2 | — | Trigger wheel |

If the trigger is removed for any reason, then a new trigger wheel MUST be fitted.

## Connecting Rods and Pistons

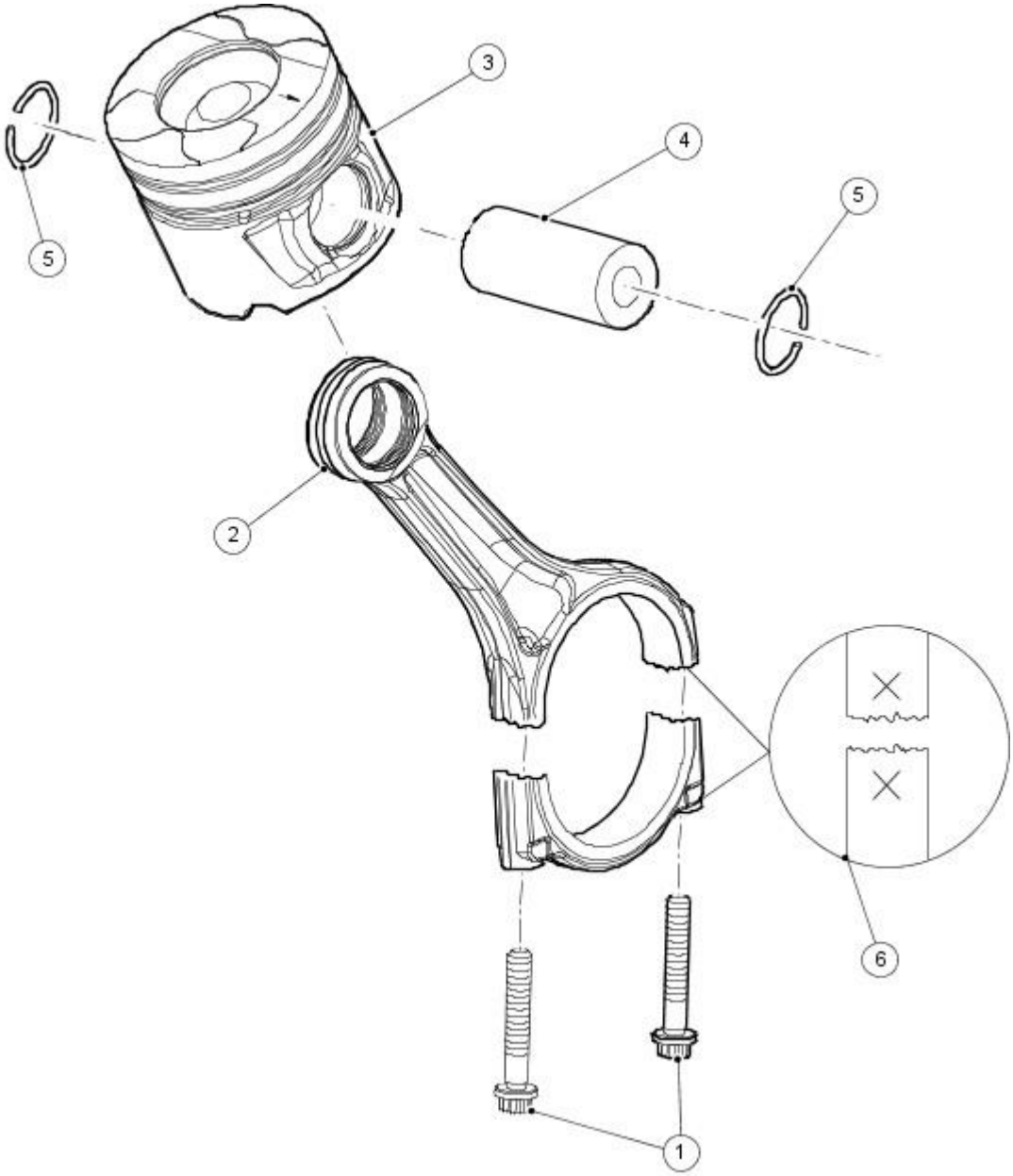


E52134

| Item | Part Number | Description |
|---|---|---|
| 1 | — | Connecting rod bolts |
| 2 | — | Connecting rod |
| 3 | — | Piston |
| 4 | — | Gudgeon pin |
| 5 | - | Circlips |
| 6 | - | Connecting rod identification |

In production the connecting rods are fitted in sets of six. The connecting rods are offset fracture split. Each connecting rod is marked (etched) with the cylinder number on either side of the fracture split line.

The pistons are made from aluminium alloy and fitted with three rings. The piston crown incorporates a pronounced bowl. This forms the combustion chamber which promotes swirl and turbulence, necessary for good combustion and improved emission. In addition, the piston skirt, which comes into contact with the cylinder bore, has molybdenum-coated surfaces. These counteract scoring of the cylinder and piston, therefore helping to increase engine life.

The piston also incorporates a double wave gallery within the piston crown to enhance piston cooling. The piston is supplied with oil by spray jets which are located in the engine block oil gallery. This ensures optimum piston cooling due to the high temperatures that are generated by the combustion process.

The arrows on the piston crown point to the front of the engine.

GETtheMANUALS.org

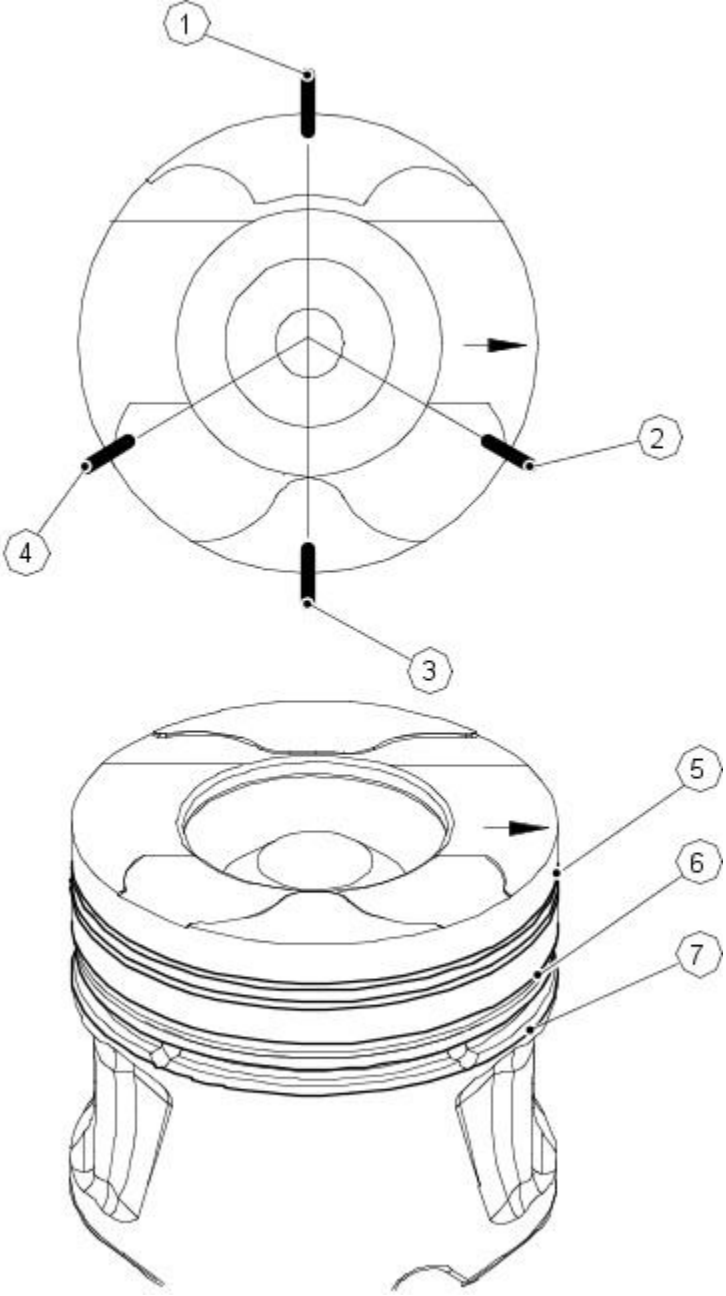


| Item | Part Number | Description |
|---|---|---|
| 1 | — | Ring gap oil control |
| 2 | — | Ring gap upper compression |
| 3 | — | Spiral joint oil control |
| 4 | — | Ring gap lower compression |
| 5 | - | Upper compression ring |
| 6 | - | Lower compression ring |
| 7 | - | Oil control ring |

All pistons are common single grade/single part number for all engines.

The piston top ring is a taper type and is fitted with a taper to the top of the piston. All rings marked 'top' are assembled with top to uppermost. All rings must be spaced evenly around the piston before installing. The circumference gap of the double bevelled oil control ring must be opposite to the spiral control joint.

Piston bowl volume is 20.025cc and the compression ratio is 17.3:1.

## Cylinder Heads and Valve Gear

The cylinder head is of high quality aluminium and cannot be reworked. The cylinder head is secured to the engine block by eight bolts.

The cylinder head incorporates four valves per cylinder, glow plugs and a knock sensor. A vertically centrally placed fuel injector guarantees maximum distribution of fuel into the combustion chamber.

The cylinder head gasket is a three layer laminated steel construction that has an excellent service life and sealing properties. The cylinder head gasket is available in five different thicknesses depending on the piston protrusion height. The cylinder head gaskets are identified by serrations cut into the front end of the gasket.

The valves are operated directly by steel roller rockers with hydraulic lash adjusters.

GETtheMANUALS.org

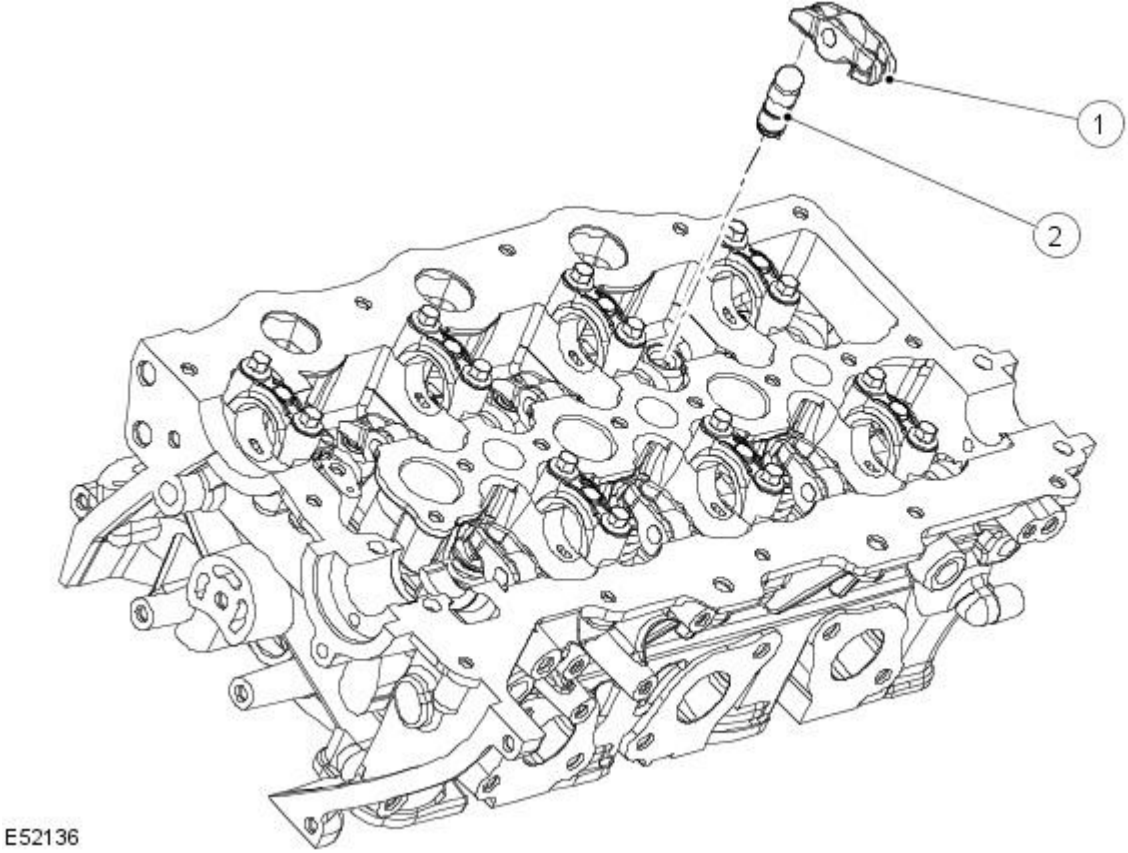


| Item | Part Number | Description |
|---|---|---|
| 1 | — | Steel rocker |
| 2 | — | Hydraulic adjuster |

## Inlet Manifold

The induction is designed to optimise torque across the engine speed/load range. The air charge enters the induction manifold from the EGR throttle valve and passes into the plenum for distribution to the cylinders.

The purpose of the plenum is to maximise the air charge into the cylinders.

The inlet manifolds are of plastic composite construction and are handed for the left and right hand bank. The manifolds incorporate a twin plenum intake system and integrated cam covers. The plenum systems are vacuum operated, these are located at the rear of the manifolds and are ECM controlled

The inlet manifolds/cam covers are secured to the cylinder head by 13 shouldered bolts and sealed by means of rubber gasket.

## Camshafts

The camshaft's construction is of hollow steel tube with pressed on syntered lobes. There are two camshafts per cylinder head. The camshafts have pressed on drive sprockets which are marked for timing purposes. The interconnecting drive chain is also marked for valve timing. The drive chain has a hydraulic tensioner. Both banks are of similar construction. They are not interchangeable.

GETtheMANUALS.org

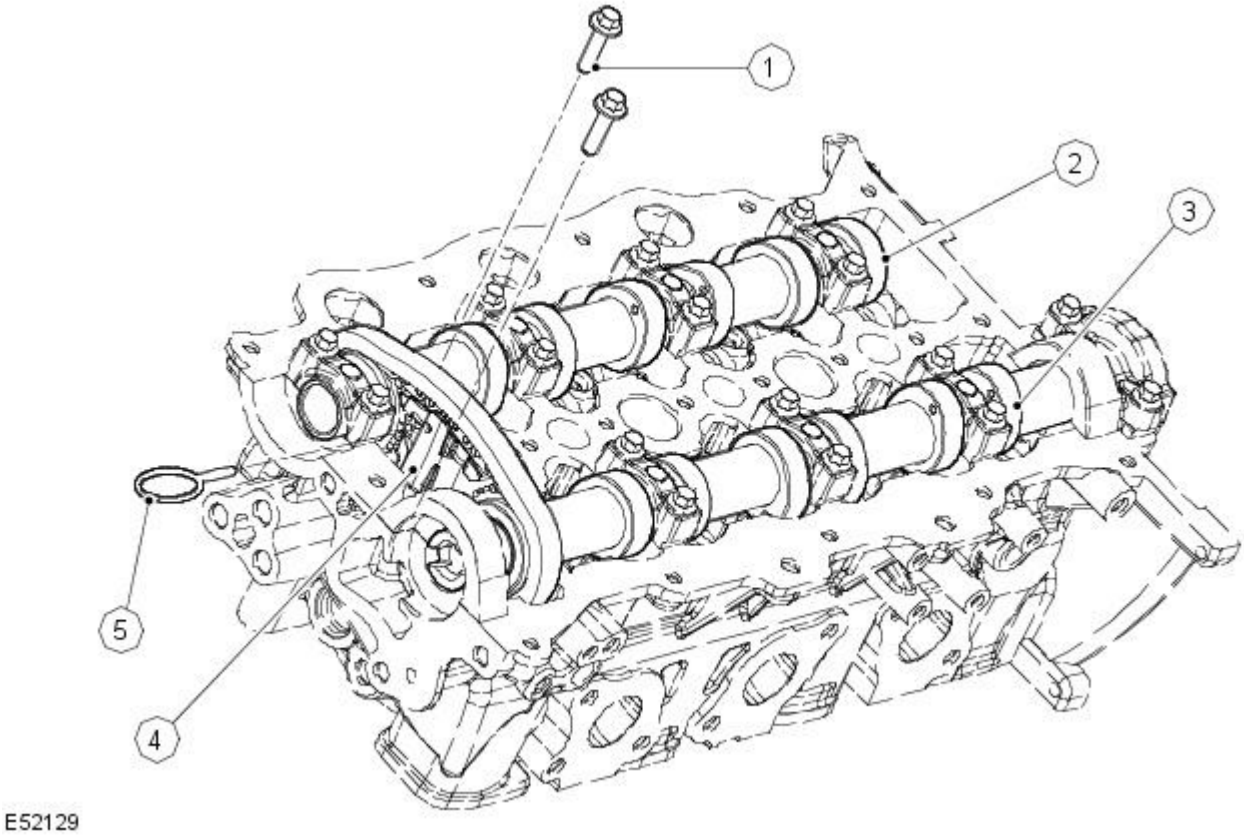


| Item | Part Number | Description |
|---|---|---|
| 1 | — | Tensioner securing bolts |
| 2 | — | Camshaft bearing caps |
| 3 | — | Camshaft |
| 4 | — | Chain tensioner |
| 5 | — | Tensioner retaining pin |

The drive sprockets also form the thrust faces for the camshaft. In production camshaft endfloat is set to 0.065mm-0.185mm.

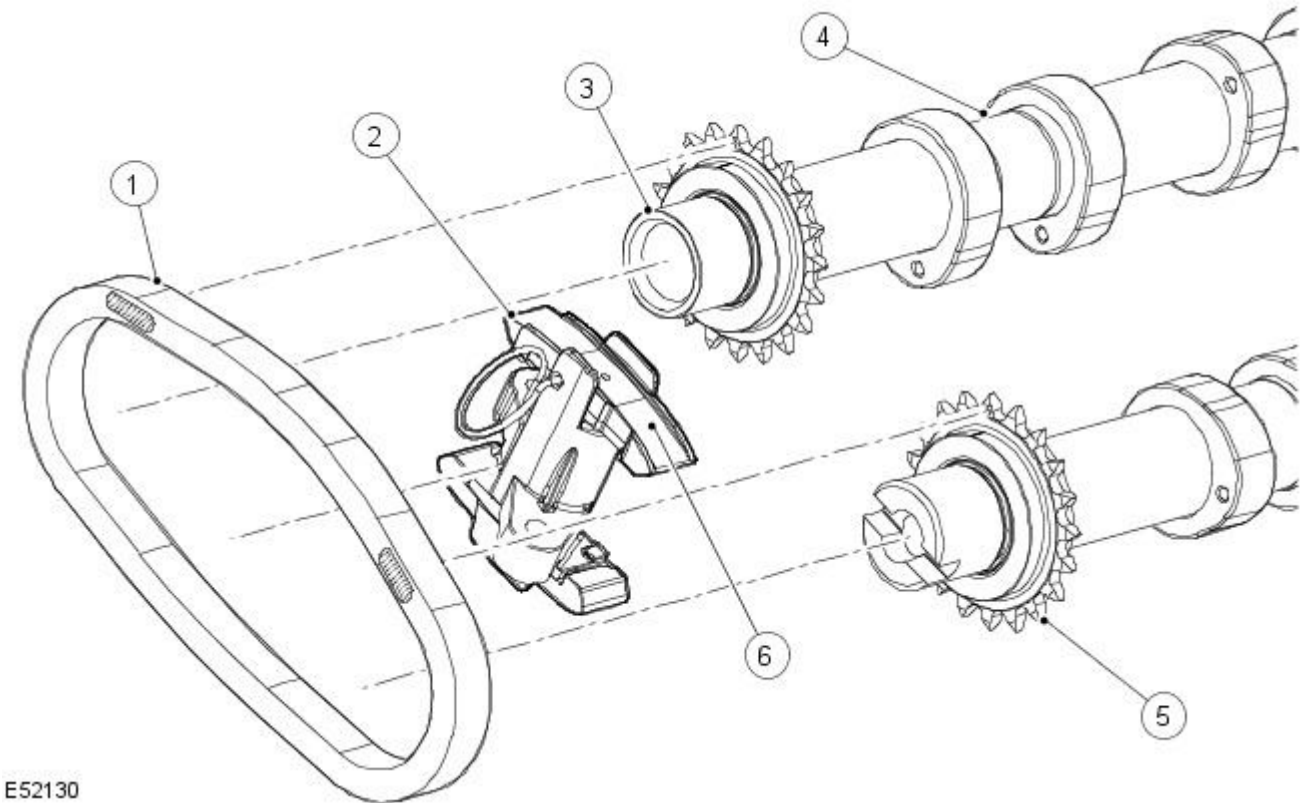


| Item | Part Number | Description |
|---|---|---|
| 1 | — | Drive chain |
| 2 | — | Tensioner locking pin |
| 3 | — | Camshaft |
| 4 | — | Cam lobe |
| 5 | — | Drive gear |
| 6 | — | Tensioner |

## Camshaft Bearings

GETtheMANUALS.org

The camshafts are supported in five line bored bearings. The bearing caps, which are individually identified, must be fitted in the correct

sequence.

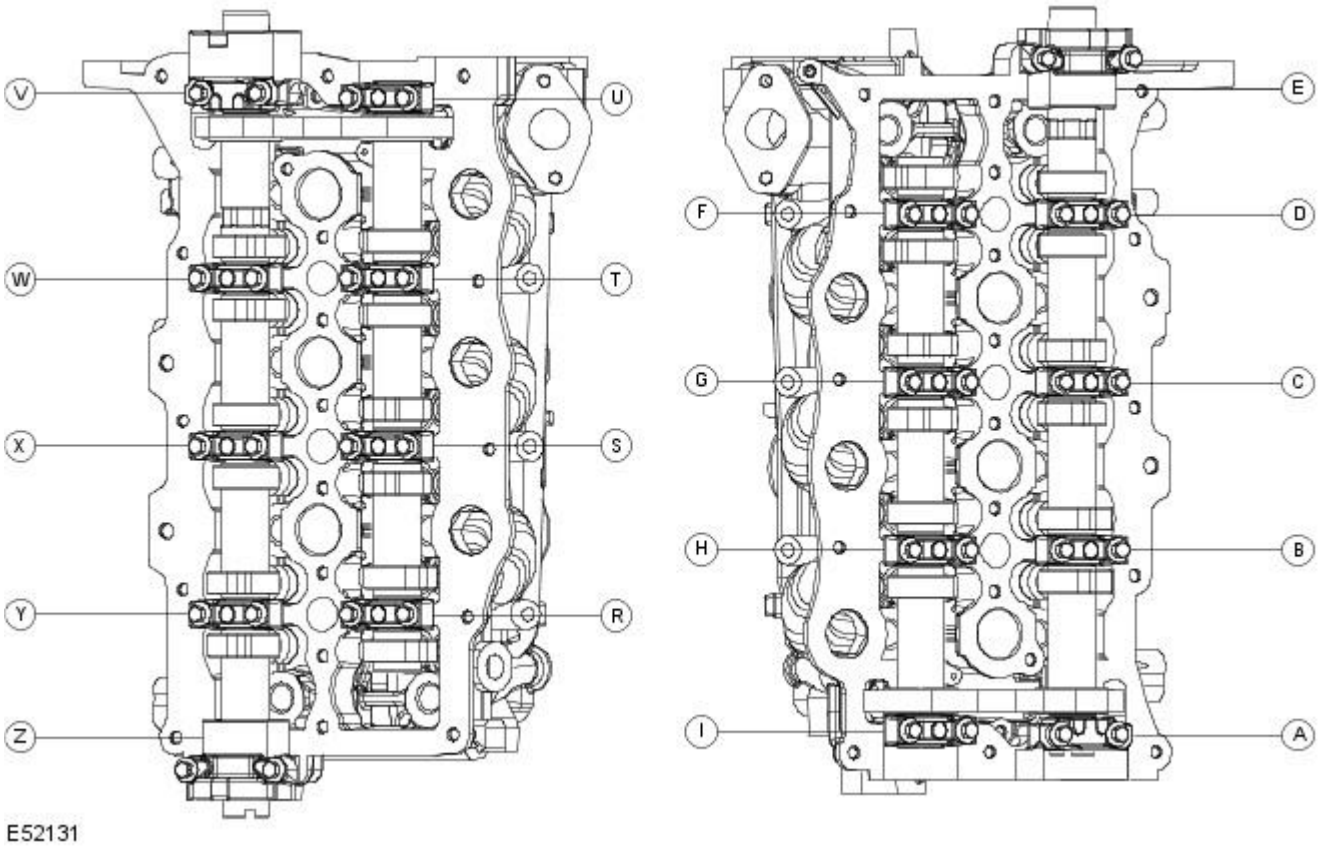


E52131

The right hand exhaust camshaft drives the vacuum pump which is sealed by an O-ring seal and secured by three bolts. Both inlet camshafts are sealed at each end by the inlet manifold/cam cover.

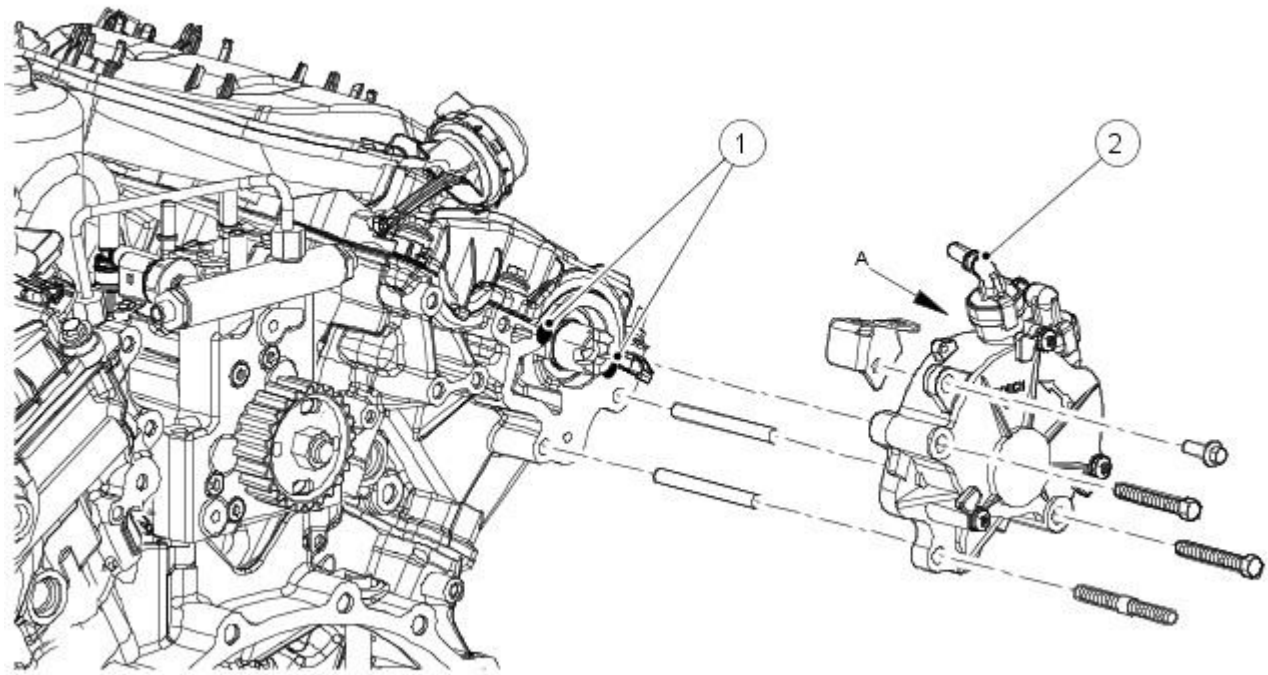


E52132

The vacuum pump supplies vacuum for the inlet port deactuation system and brake servo assistance. The pump is located at the rear of the engine and driven by the right hand side exhaust camshaft.

High Pressure Pump

The left hand exhaust camshaft drives the high pressure pump by means of a belt drive sprocket, which is supported by a boss and a single bolt fixing.

The high pressure pump is not timed to the engine.

GETtheMANUALS.org

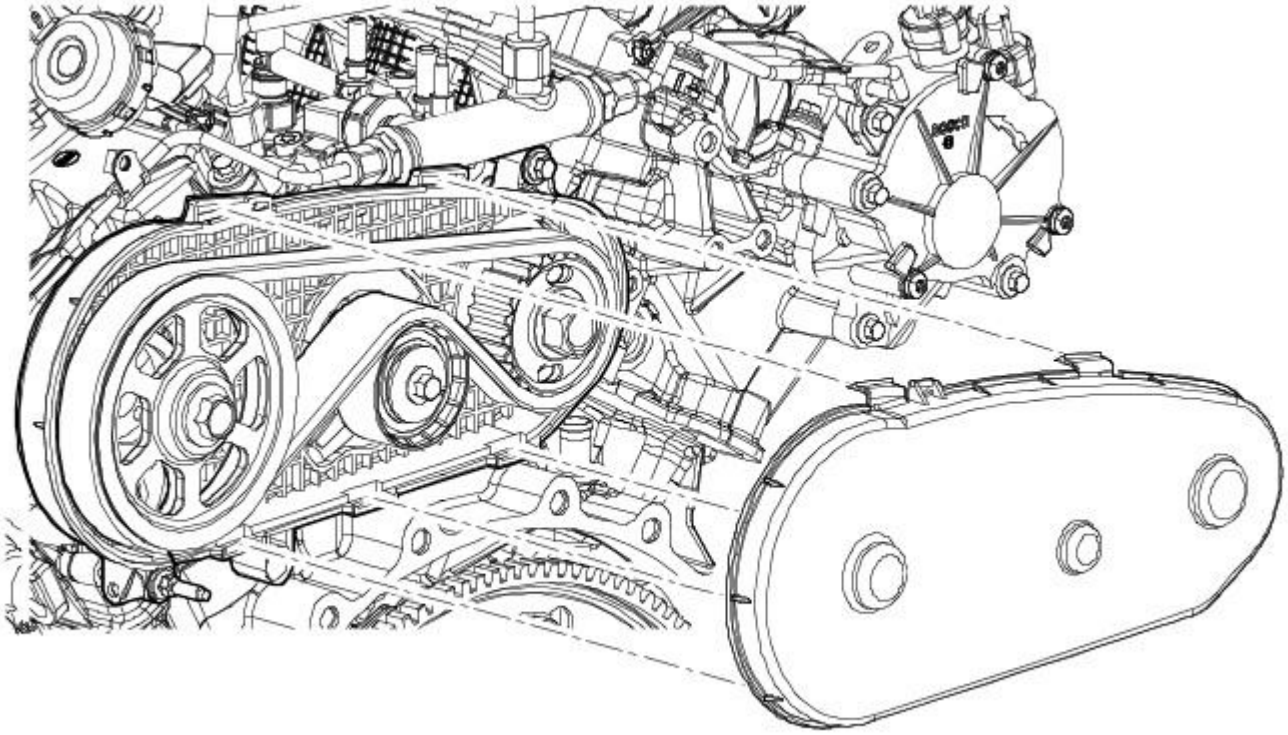

E52143

## Timing Gear

The camshafts are driven from the crankshaft pulley via a timing belt to the front the of exhaust camshafts. The camshaft gears are bolted to a drive flange via three elongated adjustment holes and in turn bolted to the camshafts by a single bolt.

Each pair of camshafts are chain driven and must be timed before assembly.

## Sump Pan

The sump pan is made from pressed steel and is secured to the bedplate by 21 M6 x 16 bolts.

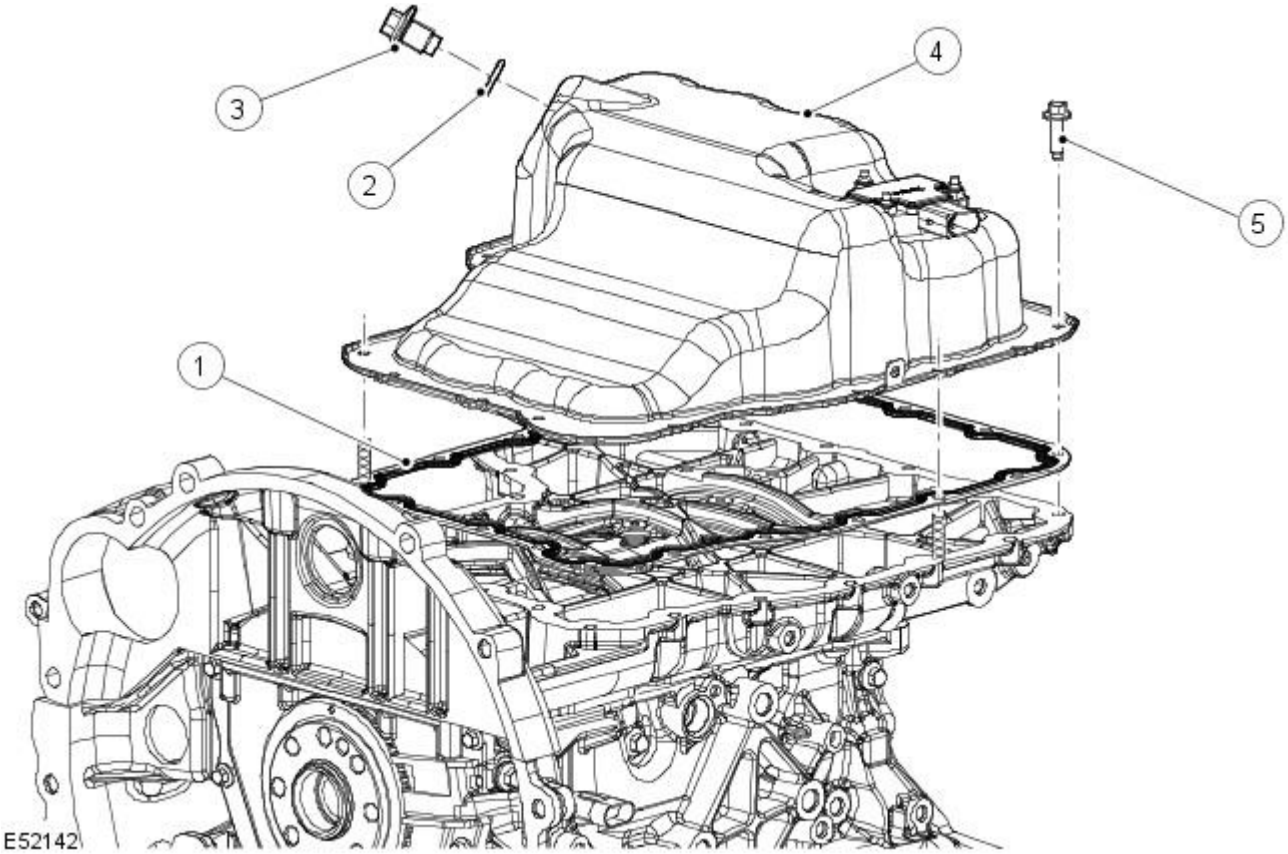


E52142

| Item | Part Number | Description |
|---|---|---|
| 1 | — | Gasket |
| 2 | — | Draining bolt seal |
| 3 | — | Draining bolt |
| 4 | — | Sump pan |
| 5 | — | Retaining bolts |

GETtheMANUALS.org

## Engine Lubrication System

Oil is drawn from the oil pan and pressurised by the oil pump. The output from the oil pump is then filtered and distributed through the internal passage ways. Oil is cooled before entering the filter.

All moving parts are lubricated by pressure or splash oil. Pressurised oil is also provided for operation of the hydraulic adjusters, turbochargers and timing gear chain tensioners.

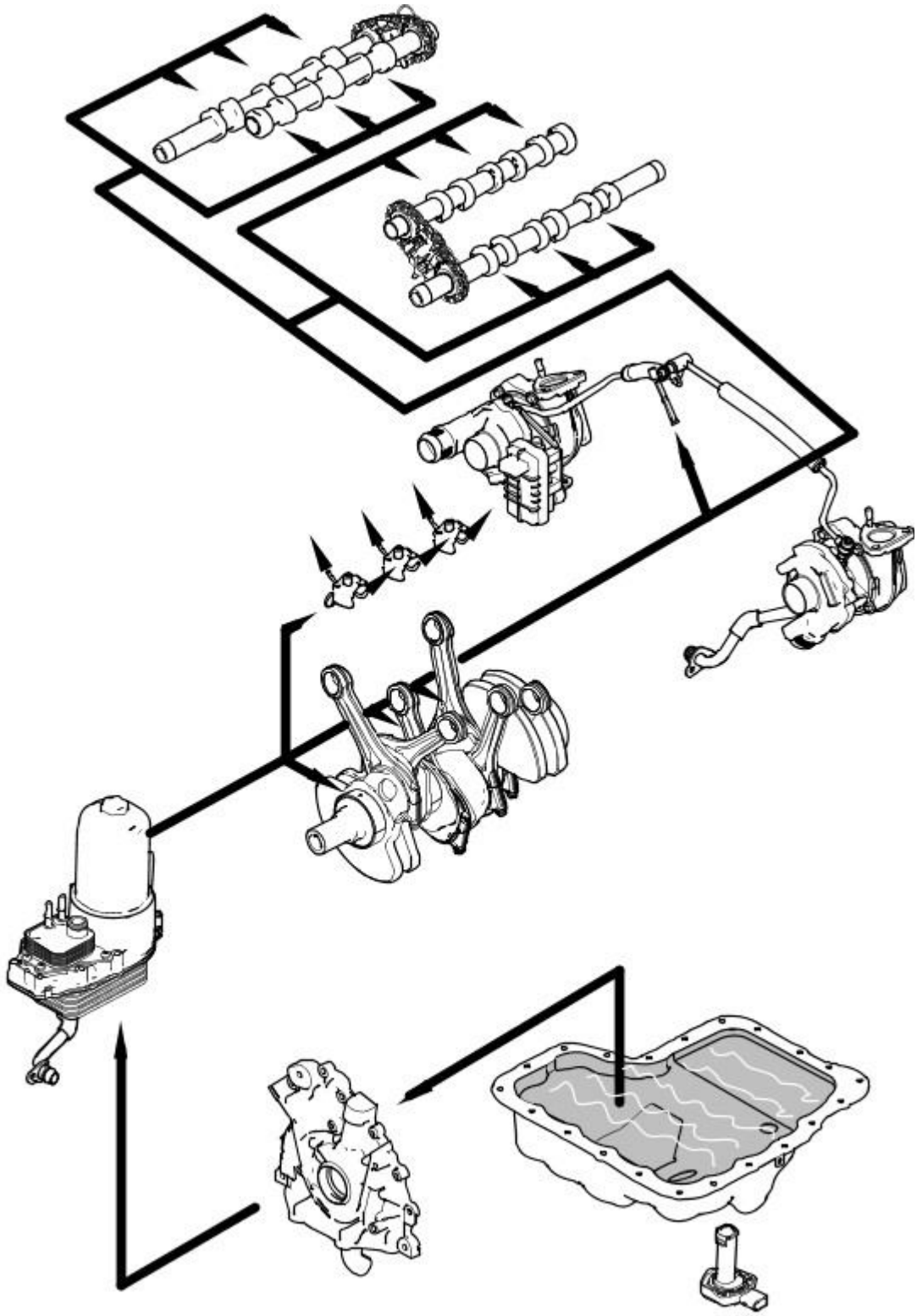

E52138

The engine is lubricated by a forced-feed circulation system with full flow oil filter. The oil cooler forms a unit with the oil filter and fuel cooler which is mounted centrally in the cylinder block between the two banks of cylinders. The engine oil is cooled using the engine cooling system. This eliminates the need for an additional engine oil cooler remotely mounted.

GETtheMANUALS.org

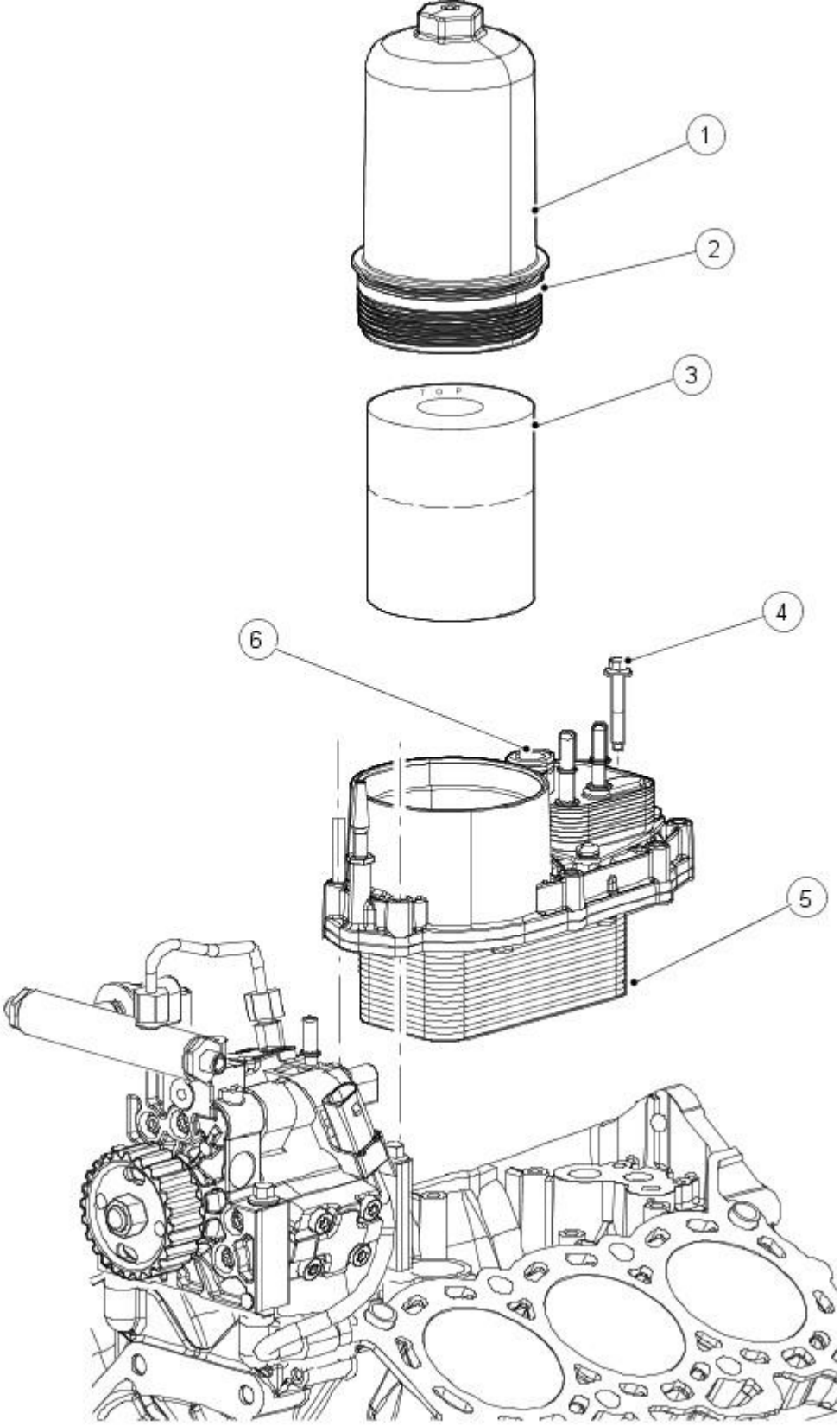


| Item | Part Number | Description |
|---|---|---|
| 1 | — | Filter housing |
| 2 | — | 'O' ring seal |
| 3 | — | Paper element |
| 4 | — | Retaining bolts |
| 5 | — | Cooler assembly |
| 6 | — | Water inlet connection |

## Oil Pump

The oil pump is a gear type pump and is bolted and dowelled to the front of the engine block. It is sealed by means of rubber gasket which is recessed into the oil pump casing. The pump is driven directly by two flats from the front of the crankshaft. The oil relief valve is an integral part of the pump.

GETtheMANUALS.org

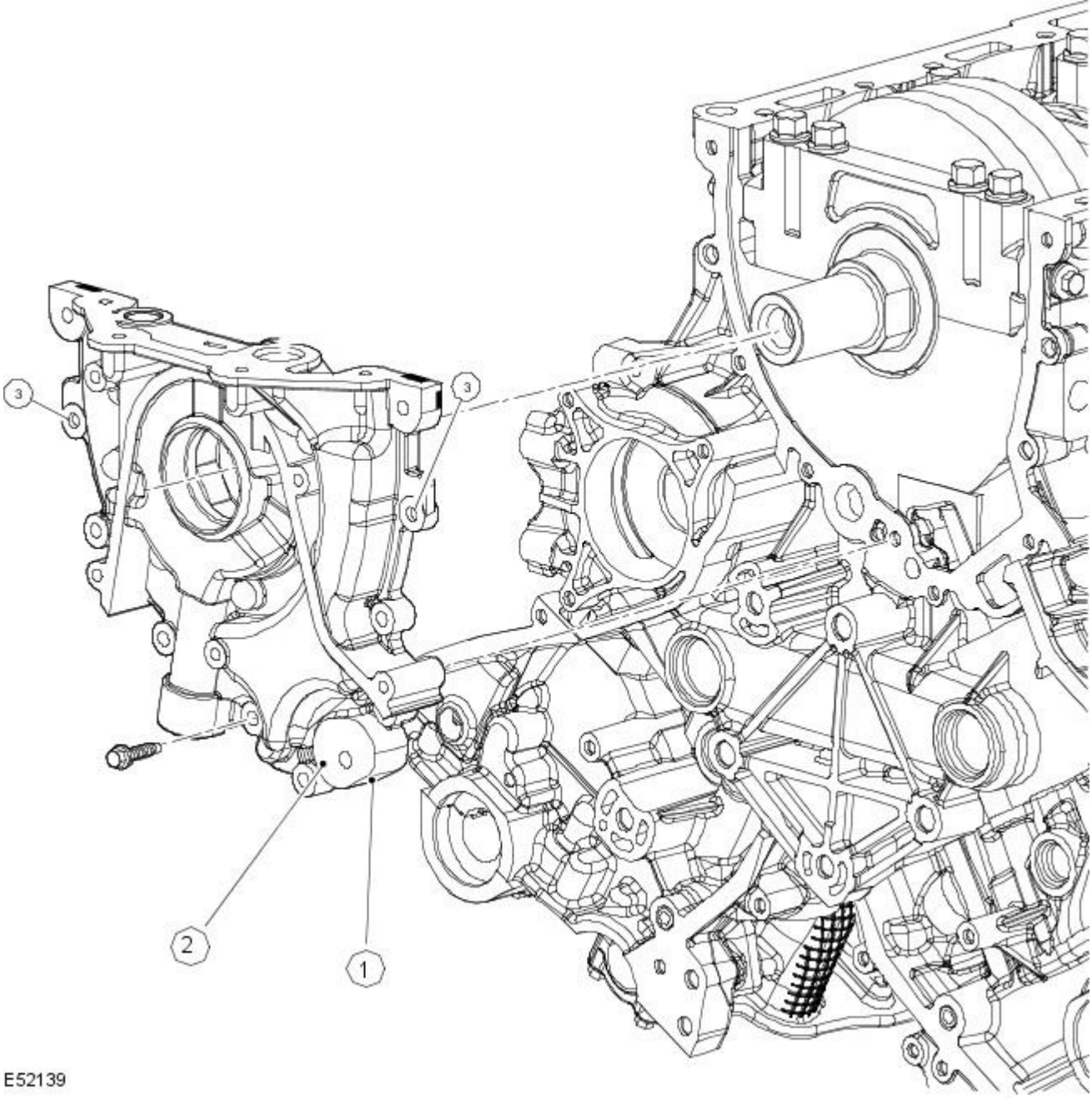


| Item | Part Number | Description |
|---|---|---|
| 1 | — | Oil pump |
| 2 | — | Primary tensioner boss |
| 3 | — | Draining bolt |
| 4 | — | Sump pan |
| 5 | — | Retaining bolts |

Oil spray jets are bolted in place under the cylinder bores between the crank bearing journals. The oil jets help to keep the pistons cool under arduous conditions and also prevent the oil draining back when the engine is stopped.

GETtheMANUALS.org

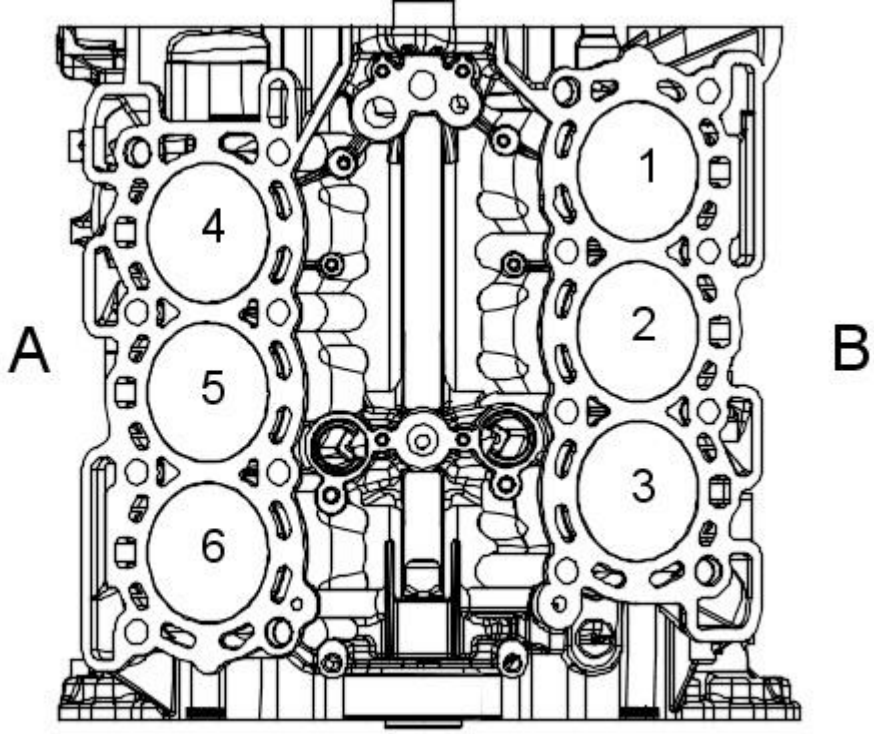


E52141

## Engine Management

The ECM's (Engine Control Module) high capacity processor employs advanced software strategies that continuously control the engine's operating parameters. It gathers information from an array of sensors and provides output to the actuators. The ECM also operates a port deactivation system, which closes or opens flaps in the inlet system to provide the optimum swirl and flow conditions throughout the operating range of the engine.

In addition, the ECM controls the actuation of the Exhaust Gas Recirculation system, the Variable Geometry Turbochargers and the throttle, giving faster and more accurate response. A full torque-based strategy supports multiple injection control and integration with transmission and braking controllers. Transient torque and boost control enables vehicle performance to be optimised without compromising engine durability

## System Components

All engine functions are controlled by the Siemens common rail ECM

Crank position (CKP) sensor

The CKP signal is used to determine: the quantity of fuel to be injected, the start of fuel delivery and the quantity of exhaust gases to be recirculated.

The crank position sensor is located at the rear of the crankshaft behind the flywheel.

The crankshaft position sensor (CKP ) is a Hall effect sensor which scans a magnetic disc on the crankshaft. The air gap between the magnetic disc and the CKP is predetermined by the mounting of the sensor.

Camshaft position (CMP) sensor

Location: on the cylinder head behind the left hand camshaft timing belt pulley.

The CMP sensor is Hall effect type and is required to identify cylinder No. 1. (This is to synchronise engine to camshaft). The sensor scans a ring incorporated in the left hand camshaft timing belt pulley. The air gap between the magnetic ring and the CMP sensor is predetermined by the mounting of the sensor.

Engine coolant temperature (ECT) sensor

Location: in the top outlet hose.

The ECT is a NTC type sensor and is fitted into the top water outlet hose. The sensor has a bayonet type fitting.

Mass Air Flow (MAF) sensor

The MAF sensor is used to calculate the air mass. The MAF sensor is capable of detecting the mass air flow extremely precisely.

Location: there are two MAF sensors fitted. Each sensor is fitted to separate intake pipes.

On engines with a variable turbocharger, the MAF sensor is used solely to control the exhaust gas recirculation (EGR) and not the fuel metering. The MAF sensor also incorporates the Intake Air Temperature (IAT) sensor.

The IAT sensor measures the intake air or, the charge air temperature and supplies the ECM with an analog voltage signal.

Manifold Absolute Pressure (MAP) sensor

Location: fitted to the top of the throttle valve.

The MAP sensor measures the charging pressure in the intake pipe and sends the ECM an analog voltage signal.

Air Charge Temperature (ACT) sensor

GETtheMANUALS.org

Location: fitted to the pressure side of the air intake throttle valve.

The ACT sensor measures the intake air or the charge air temperature and supplies the ECM with an analog signal.

Fuel Rail Pressure sensor

Location: fitted to the diverter rail which in turn is bolted to the high pressure pump at the rear of the engine.

The fuel pressure sensor measures the instantaneous fuel pressure in the fuel rail very precisely within a very short time and supplies a voltage signal according to the pressure.

Fuel Temperature sensor

Location: the fuel temperature sensor is located on the low pressure side of the high pressure pump in the case of the common rail system. The sensor measures the temperature of the fuel in the low pressure system. Air and excessive heat in the fuel system can have an adverse effect on the operation of the sensor.

Exhaust Gas Recirculation (EGR) valves

Location: there are two EGR valves fitted, one to each exhaust manifold. These are water cooled and electronically controlled by the ECM.

GETtheMANUALS.org

# Engine - 2.7L V6 - TdV6 - Engine

Diagnosis and Testing

## Inspection and Verification

1. **1.** Verify the customer concern.
2. **2.** Visually inspect for obvious signs of mechanical or electrical damage.

**Visual Inspection Chart**

| Mechanical |
|---|
| • Coolant level<br>• Coolant leaks<br>• Oil level<br>• Oil leaks<br>• Visibly damaged or worn parts<br>• Loose or missing nuts or bolts |

3. **3.** If an obvious cause for an observed or reported concern is found, correct the cause (if possible) before proceeding to the next step
4. **4.** If the cause is not visually evident, verify the symptom and
   REFER to: Engine (303-00, Diagnosis and Testing).
   .

## Active engine mounts

Overview

The active engine mount system operates at idle speed to help damp out any vibration from the engine.

The system is triggered by a signal from the engine control module activating the mounts at engine speeds between 600 and 900 rpm, when the mounts will operate as a pair.

The system determines which side mount is which by sending a ground signal to the right hand mount (this pin is vacant on the left hand mount).

## Inspection and Verification

1. **1.** Verify the customer concern.
   - If the customer concern is of a vibration at **other** than idle speed, then the fault is **not** with the active engine mounts.
2. **2.** Use the Jaguar approved diagnostic system or a scan tool to retrieve any fault codes, as other causes of vibration or misfire should be eliminated before condemning an active engine mount.
3. **3.** Visually inspect for obvious signs of mechanical or electrical damage.

**Visual Inspection**

| Mechanical | Electrical |
|---|---|
| • Active engine mounts, correct fitment/damage<br>• Routing of pipework etc to avoid vibrations<br>• Contact anywhere between the driveline and chassis | • Fuse 9, front power distribution box<br>• Harnesses/connectors<br>• Active engine mounts<br>• Engine control module (ECM) |

4. **4.** If an obvious cause for an observed or reported concern is found, correct the cause (if possible) before proceeding.
5. **5.** If any DTCs were present in the steps above, make sure their causes are rectified before beginning any work on the active engine mounts.

## Pinpoint test

**PINPOINT TEST A : ACTIVE ENGINE MOUNTS**

WARNING: The following test may involve working in close proximity to hot components. Make sure adequate protection is used. Failure to follow this instruction may result in personal injury.

| TEST CONDITIONS | DETAILS/RESULTS/ACTIONS |
|---|---|
| **A1: CHECK THE ACTIVE ENGINE MOUNT FUNCTION** | |
| 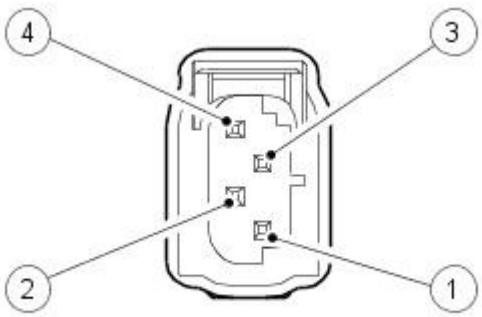 <br>E66956 | **Right hand active engine mount, PI065**<br>Circuit / Pin<br>Power ground / 01<br>Power supply / 02<br>Signal / 03<br>Ground / 04 |

GETtheMANUALS.org

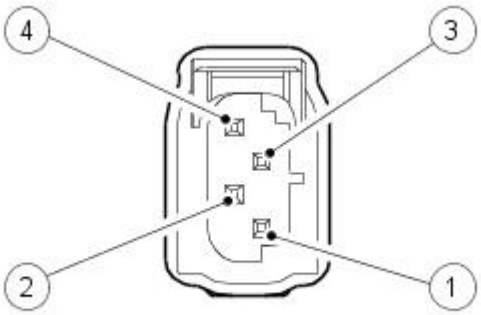

E66956

**Left hand active engine mount, PI066**

| Circuit | Pin |
|---|---|
| Power ground | 01 |
| Power supply | 02 |
| Signal | 03 |

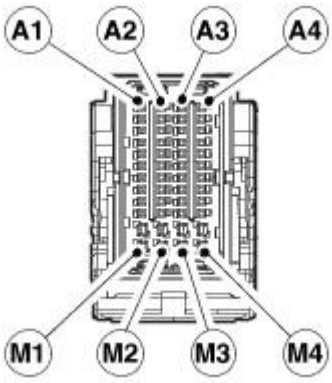

E66957

**Engine control module (ECM), EC066**

| Circuit | Pin |
|---|---|
| Active engine mount signal | H1 |

1. Key off.
2. Disconnect the right hand active engine mount connector, PI065.
3. Using the Jaguar approved diagnostic system, activate the mounts.
4. Check for operation of the left hand mount.
   - Operation can be confirmed by feeling for vibration of the mount.
5. Key off.
6. Reconnect the right hand active engine mount connector, PI065.
7. Disconnect the left hand active engine mount connector, PI066.
8. Using the Jaguar approved diagnostic system, activate the mounts.
9. Check for operation of the right hand mount.
   - Operation can be confirmed by feeling for vibration of the mount.

Did both mounts operate when activated?

**Yes**
GO to A2.

**No**
GO to A3.

## A2: CHECK THE INTERNAL DIAGNOSTIC CIRCUIT FOR SHORT CIRCUIT

1. Measure the resistance between:

**Right hand mount**

| PI065, component side | PI065, component side |
|---|---|
| Pin 04 | Pin 01 |

**Left hand mount**

| PI066, component side | PI066, component side |
|---|---|
| Pin 04 | Pin 01 |

Are both resistances greater than 10 Kohms?

**Yes**
An intermittent fault may be present in the wiring harness. GO to A3.

**No**
INSTALL a new active engine mount in place of the suspect unit. Clear any DTCs, test the system for normal operation.

## A3: CHECK FOR POWER SUPPLY TO THE ACTIVE ENGINE MOUNTS

1. Disconnect the right hand active engine mount connector, PI065.
2. Key on, engine off.
3. Measure the voltage between:

**Right hand active engine mount**

| PI065, harness side | Battery |
|---|---|
| Pin 02 | Negative terminal |

**Left hand active engine mount**

| PI066, harness side | Battery |
|---|---|
| Pin 02 | Negative terminal |

Is the voltage at both pins greater than 10 volts?

**Yes**
GO to A4.

**No**
REPAIR the power supply circuit. This circuit includes harness splice, PIS87. For additional information, refer to the wiring diagrams. Clear any DTCs, test the system for normal operation.

GETtheMANUALS.org

**A4: CHECK THE SIGNAL FROM THE ECM**

1 Using the Jaguar approved diagnostic system, activate the mounts.

2 Measure the signal voltage between:

**Right hand active engine mount**

| PI065, harness side | Battery |
|---|---|
| Pin 03 | Negative terminal |

**Left hand active engine mount**

| PI066, harness side | Battery |
|---|---|
| Pin 03 | Negative terminal |

Is the voltage between 1 and 2.5 volts with the mount active? (the circuit should register 4-5 volts with the mount inactive).

**Yes**

GO to A5.

**No**

GO to A6.

**A5: CHECK FOR GROUND TO THE ACTIVE ENGINE MOUNTS**

• NOTE: This test includes a check of the additional ground circuit for the right hand mount.

1 Disconnect the battery negative terminal. **Link to genproc.**

2 Measure the resistance between:

**Right hand active engine mount**

| PI065, harness side | Battery |
|---|---|
| Pin 01 | Negative lead |
| Pin 04 | Negative lead |

**Left hand active engine mount**

| PI066, harness side | Battery |
|---|---|
| Pin 01 | Negative lead |

Are the resistances less than 10 ohms?

**Yes**

INSTALL a new active engine mount in place of the inoperative unit. Clear any DTCs, test the system for normal operation.

**No**

REPAIR the ground circuit. This circuit includes harness splice, PIS88. For additional information, refer to the wiring diagrams. Clear any DTCs, test the system for normal operation.

**A6: CHECK THE SIGNAL CIRCUIT FOR SHORT CIRCUIT TO GROUND**

1 Disconnect the ECM connector, EC066.

2 Measure the resistance between:

**Right hand active engine mount**

| PI065, harness side | Battery |
|---|---|
| Pin 03 | Negative lead |

**Left hand active engine mount**

| PI066, harness side | Battery |
|---|---|
| Pin 03 | Negative lead |

Is the resistance greater than 10 Kohms?

**Yes**

GO to A7.

**No**

REPAIR the short circuit. For additional information, refer to the wiring diagrams. Clear any DTCs, test the system for normal operation. REFER to the warranty policy and procedures manual if an ECM is suspect.

**A7: CHECK THE SIGNAL CIRCUIT FOR SHORT CIRCUIT TO POWER**

1 Measure the resistance between:

**Right hand active engine mount**

| PI065, harness side | Battery |
|---|---|
| Pin 03 | Positive terminal |

**Left hand active engine mount**

| PI066, harness side | Battery |
|---|---|
| Pin 03 | Positive terminal |

Is the resistance greater than 10 Kohms?

**Yes**

GO to A8.

**No**

REPAIR the short circuit. For additional information, refer to the wiring diagrams. Clear any DTCs, test the system for normal operation. REFER to the warranty policy and procedures manual if an ECM is suspect.

**A8: CHECK THE SIGNAL CIRCUIT FOR HIGH RESISTANCE**

1 Measure the resistance between:

**Right hand active engine mount**

| PI065, harness side | ECM, harness side |
|---|---|
| Pin 03 | Pin H1 |

**Left hand active engine mount**

| PI066, harness side | ECM, harness side |
|---|---|
| Pin 03 | Pin H1 |

Is the resistance less than 10 ohms?

**Yes**

An intermittent fault may be present in the wiring harness. Visually check for chaffed wires or other physical damage to the harness or connectors. REFER to the warranty policy and procedures manual if an ECM is suspect.

**No**

REPAIR the high resistance circuit. This circuit includes harness splice, PIS86. For additional information, refer to the wiring diagrams.

GETtheMANUALS.org

# Engine - 2.7L V6 - TdV6 - Camshaft Front Seal

In-vehicle Repair

| Special Tool(s) | |
|---|---|
| E52714 | Holder - camshaft pulleys front<br><br>303-1124 |
| E52713 | Installer - camshaft oil seal<br><br>303-1119 |
| 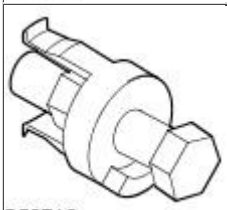 E52712 | Remover - camshaft oil seal<br><br>303-1118 |
| E52710 | Timing pin - camshaft pulleys<br><br>303-1126 |

## Removal

1. Remove the timing belt.
   For additional information, refer to: Timing Belt (303-01C Engine - 2.7L V6 - TdV6, In-vehicle Repair).
2. Remove the special tool.
   1. Retain the camshaft sprocket.
   2. Remove the special tool.

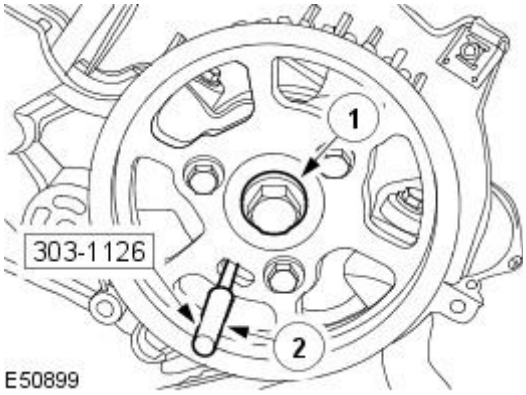

E50899

3. Remove the camshaft sprocket.
   - Remove the camshaft sprocket retaining bolts.

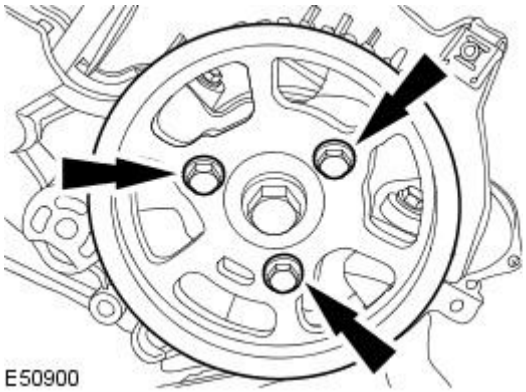
E50900

GETtheMANUALS.org

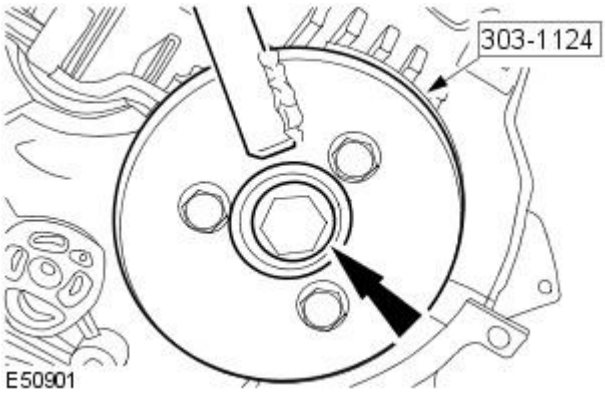


**4.** Using special tool, remove the camshaft sprocket hub.

- Remove the camshaft sprocket hub retaining bolt.

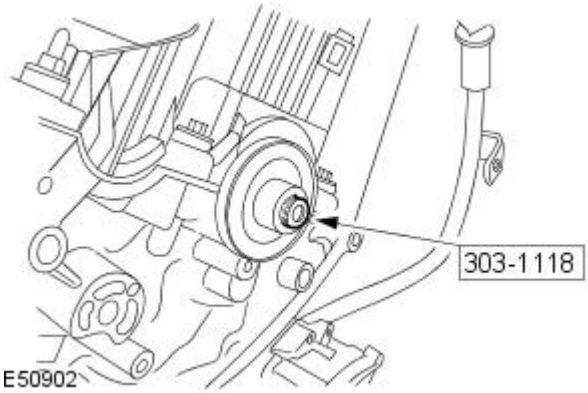


**5.** Install the special tool to the camshaft.

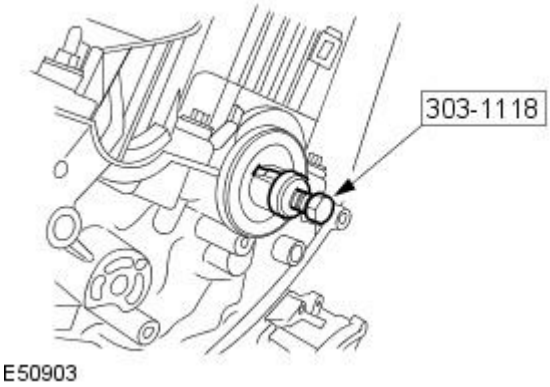


**6.** Using the special tool, remove the camshaft front seal.

## Installation

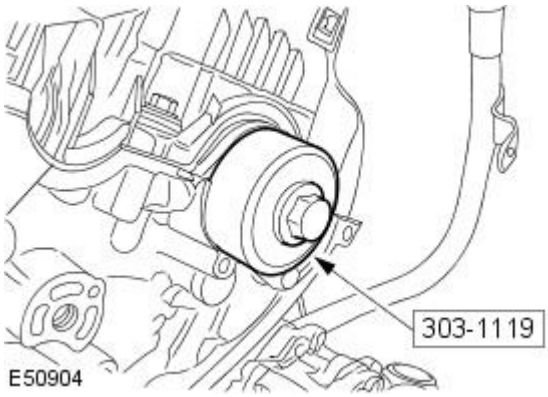


**1.** CAUTION: Do not use any lubricant on the seal or the camshaft. Failure to follow this instruction may result in damage to the vehicle.

• NOTE: Make sure all components are clean and dry.

Using the special tool, install the camshaft front seal.

GETtheMANUALS.org

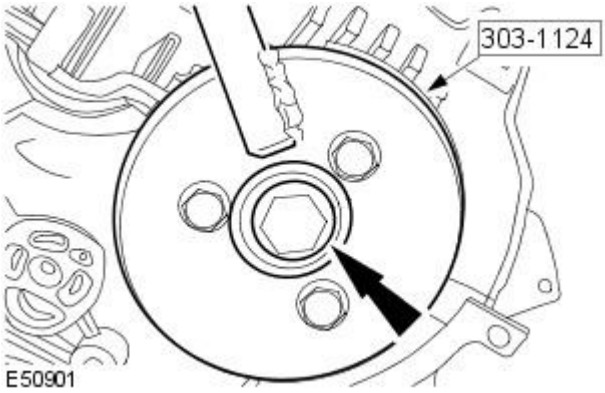


**2.** Using special tool, install the camshaft sprocket hub.

- Tighten the bolts in the sequence shown in two stages.
- Stage 1: Tighten to 80 Nm
- Stage 2: Tighten to 80 degrees

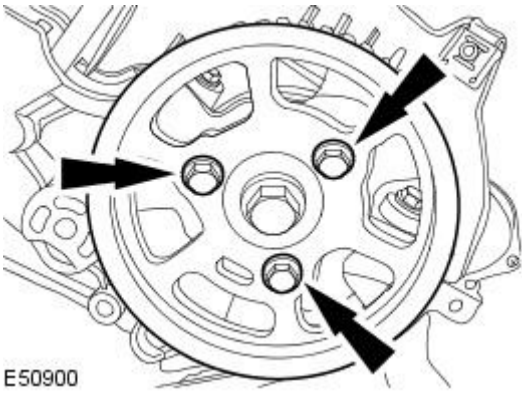


**3.** Install the camshaft sprocket.

- Tighten to 22 Nm..

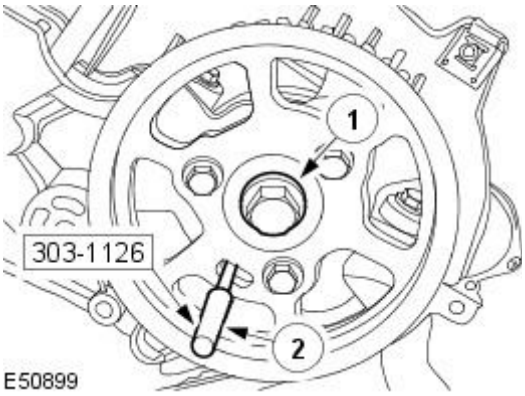


**4.** Install the special tool.

1. Retain the camshaft sprocket.
2. Install the special tool.

**5.** Install the timing belt.
For additional information, refer to: Timing Belt (303-01C Engine - 2.7L V6 - TdV6, In-vehicle Repair).

GETtheMANUALS.org

# Engine - 2.7L V6 - TdV6 - Camshaft Rear Seal

In-vehicle Repair

| Special Tool(s) | |
|---|---|
| E52712 | Camshaft Seal Remover<br><br>303-1118 |
| 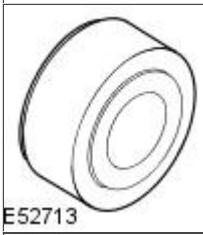 E52713 | Camshaft Seal Installer<br><br>303-1119 |
| E52715 | Holder - Camshaft Pulley Rear<br><br>303-1125 |

## Removal

1. Remove the fuel injection pump belt.
   For additional information, refer to: Fuel Injection Pump Belt (303-05 Accessory Drive, Removal and Installation).
2. Using the special tool, remove the camshaft rear pulley bolt.

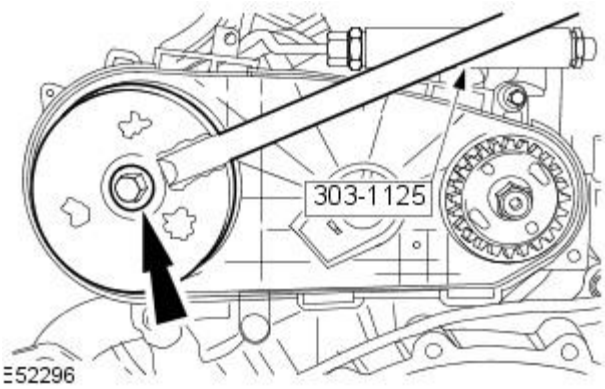

E52296

3. Remove the camshaft rear pulley.

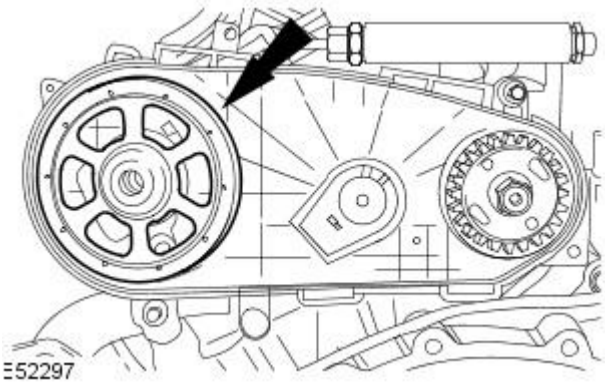
E52297

GETtheMANUALS.org

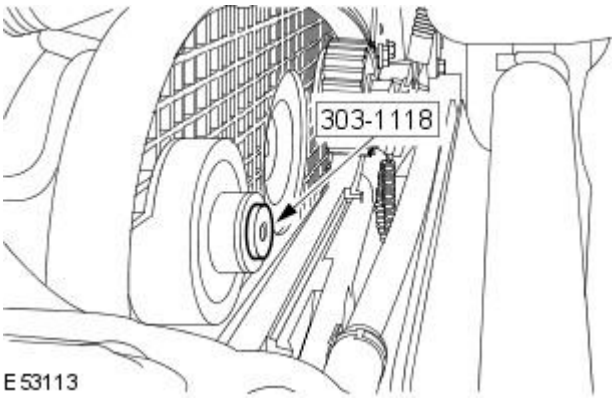


**4.** Install the special tool to the camshaft.

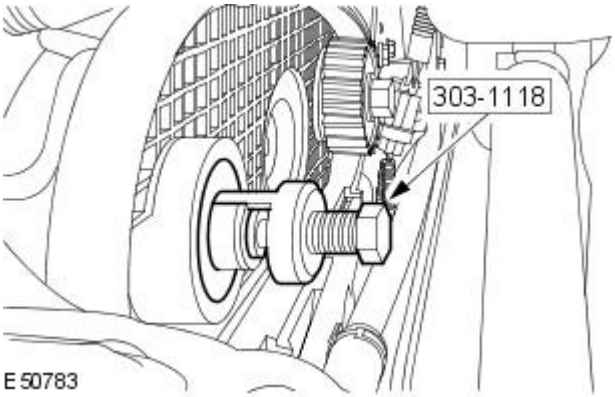


**5.** CAUTION: Make sure the special tool is seated correctly behind the camshaft rear seal. Failure to follow this instruction will result in damage to the vehicle.

Install the special tool to the camshaft rear seal.

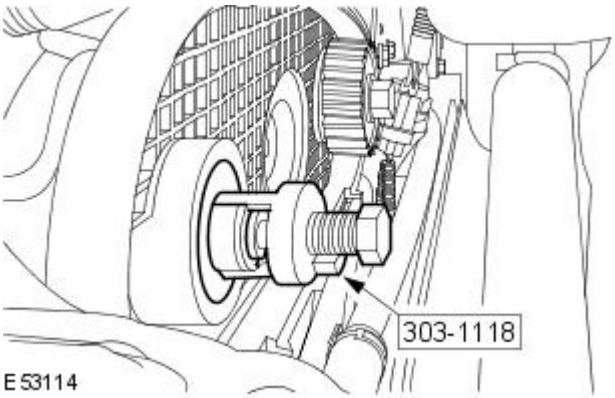


**6.** CAUTION: Make sure the special tool is seated correctly behind the camshaft rear seal. Failure to follow this instruction will result in damage to the vehicle.

Using the special tool, remove the camshaft rear seal.

- Install the reaction arm.

## Installation

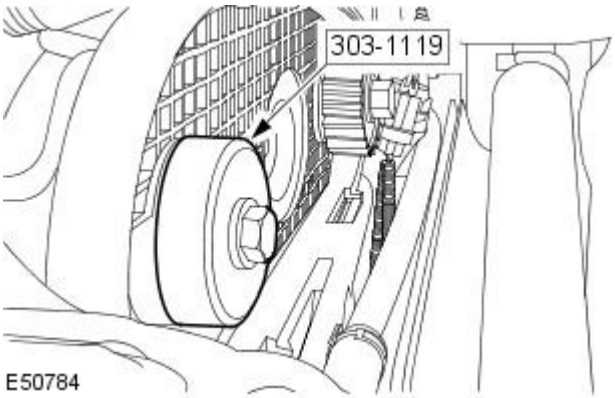


**1.** Using the special tool, install the camshaft rear seal.

GETtheMANUALS.org

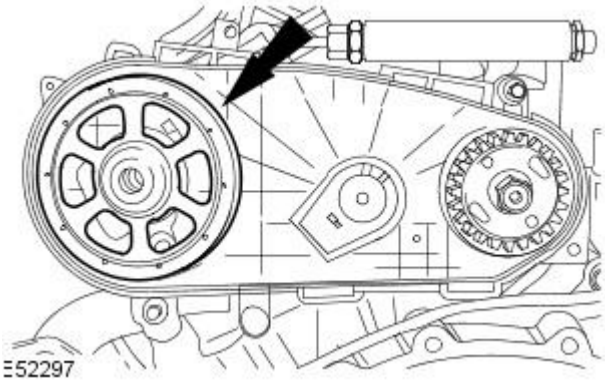


**2.** Install the camshaft rear pulley.

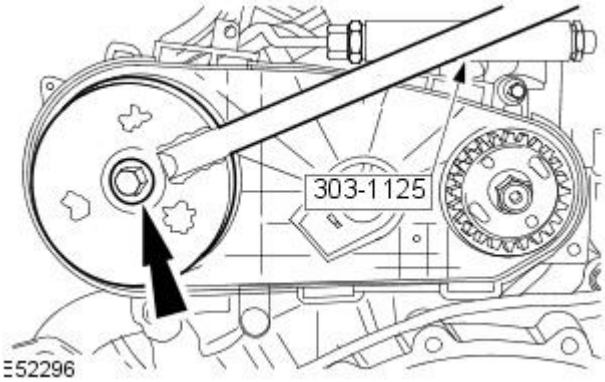


**3.** CAUTION: The camshaft pulley bolt must be tightened in two stages.

Using the special tool, install the camshaft rear pulley bolt.

- Stage 1: Tighten to 80 Nm.
- stage 2: Tighten to 80 degrees.

**4.** Install the fuel injection pump belt.
For additional information, refer to: Fuel Injection Pump Belt (303-05 Accessory Drive, Removal and Installation).

GETtheMANUALS.org

# Engine - 2.7L V6 - TdV6 - Camshafts LH

In-vehicle Repair

| Special Tool(s) | |
|---|---|
| 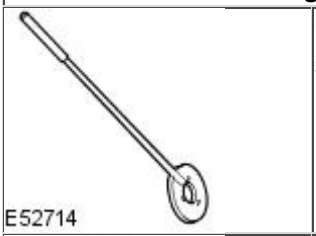 E52714 | Holder Camshaft Pulleys Front<br><br>303-1124 |
| 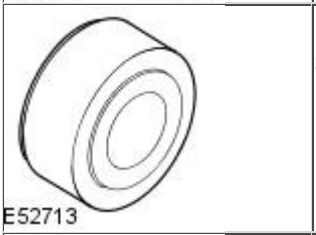 E52713 | Installer Camshaft Oil Seal<br><br>303-1119 |
| 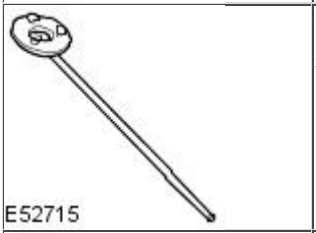 E52715 | Holder Camshaft Pulleys Rear<br><br>303-1125 |
| 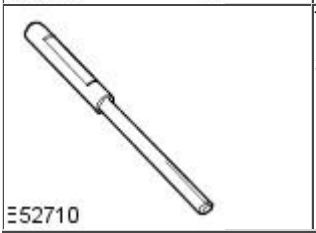 E52710 | Timing pin - camshaft pulleys<br><br>303-1126 |

**General Equipment**

| |
|---|
| Pneumatic vacuum gun |

## Removal

**1.** WARNINGS:

Wait at least 30 seconds after the engine stops before commencing any repair to the high pressure fuel injection system. Failure to follow this instruction may result in personal injury.

Do not smoke or carry lighted tobacco or open flame of any type when working on or near any fuel related components. Highly flammable mixtures are always present and may ignite. Failure to follow these instructions may result in personal injury.

This procedure involves fuel handling. Be prepared for fuel spillage at all times and always observe fuel handling precautions. Failure to follow this instruction may result in personal injury.

Do not carry out any repairs to the fuel injection system with the engine running. The fuel pressure within the system can be as high as 1650 bar. Failure to follow this instruction may result in personal injury.

• CAUTIONS:

Make sure the workshop area in which the vehicle is being worked on is as clean and as dust free as possible. Foreign matter from work on clutches, brakes or from machining or welding operations can contaminate the fuel system and may result in later malfunction.

Always carry out the cleaning process before carrying out any repairs to the fuel injection system components. Failure to follow this instruction may result in foreign matter ingress to the fuel injection system.

Diesel fuel injection equipment is manufactured to very precise tolerances and fine clearances. It is therefore essential that absolute cleanliness is observed when working with these components. Always install blanking plugs to any open orifices or lines.

GETtheMANUALS.org

Remove the intake air shut off throttle.
For additional information, refer to: Intake Air Shutoff Throttle (303-04C Fuel Charging and Controls - 2.7L V6 - TdV6, Removal and Installation).

**2.** Remove the fuel injectors.
For additional information, refer to: Fuel Injector (303-04C Fuel Charging and Controls - 2.7L V6 - TdV6, Removal and Installation).

**3.** Detach the electrical connector from the left-hand valve cover.

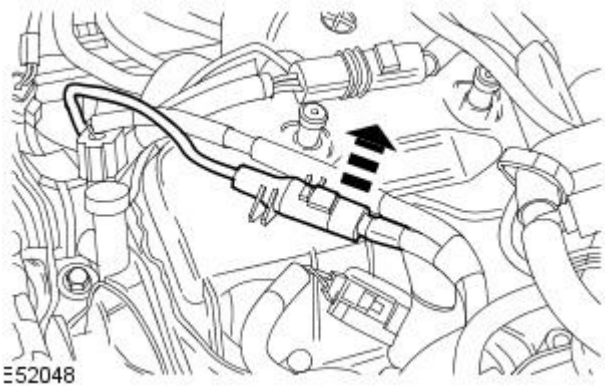


**4.** Disconnect the electrical connector.

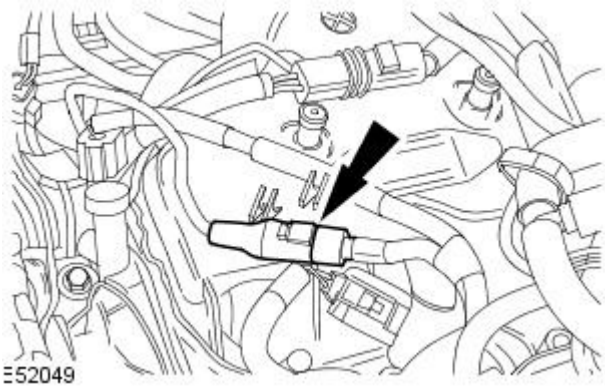


**5.** Disconnect the electrical connector.

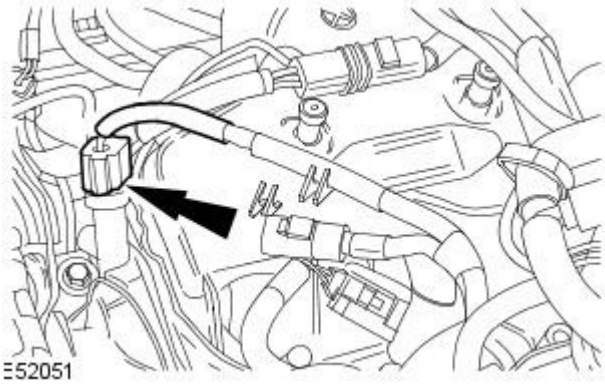


**6.** Detach the engine harness.

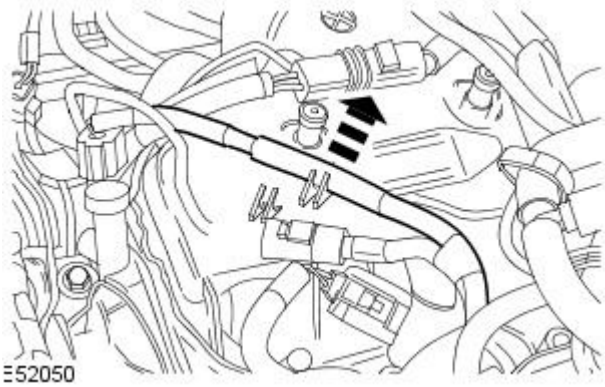


GETtheMANUALS.org

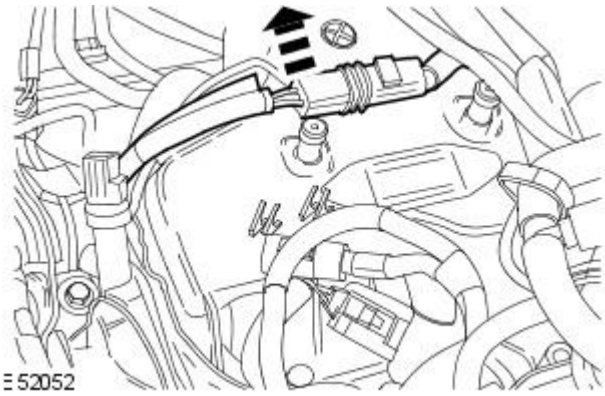


**7.** Detach the engine harness.

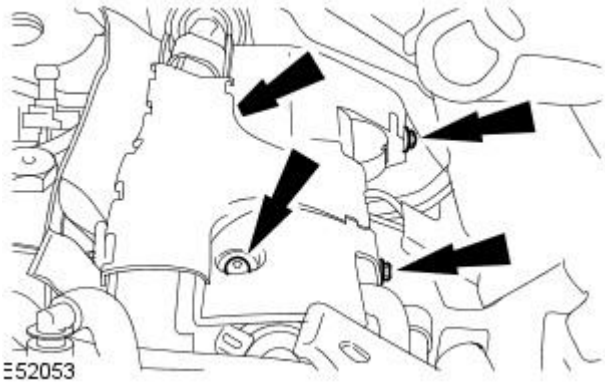


**8.** Remove the engine harness retaining bolts.

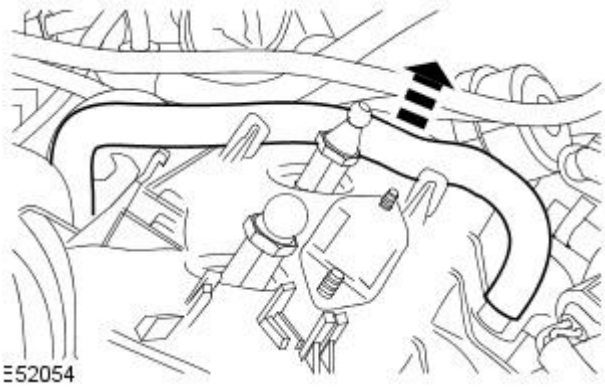


**9.** Detach the engine breather pipe.

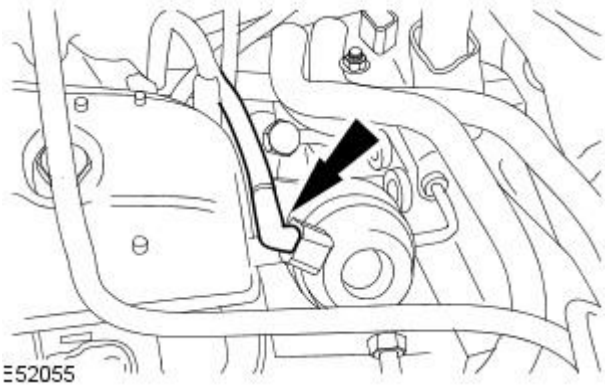


**10.** Disconnect the vacuum pipe.

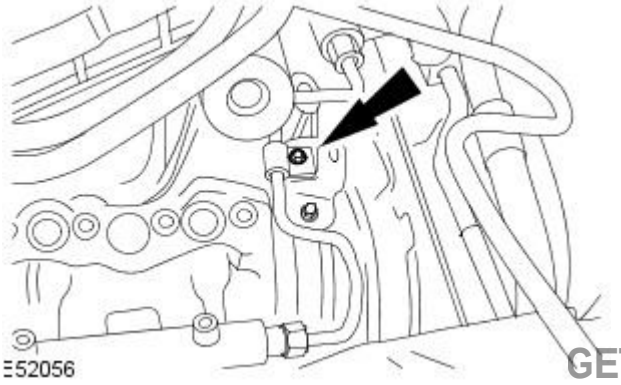


**11.** Remove the fuel injection pump supply line retaining bolt.

GETtheMANUALS.org

**12.** Clean the fuel pump, high-pressure fuel supply line and surrounding areas.
For additional information, refer to: Fuel Injection Component Cleaning (303-04C Fuel Charging and Controls - 2.7L V6 - TdV6, General Procedures).

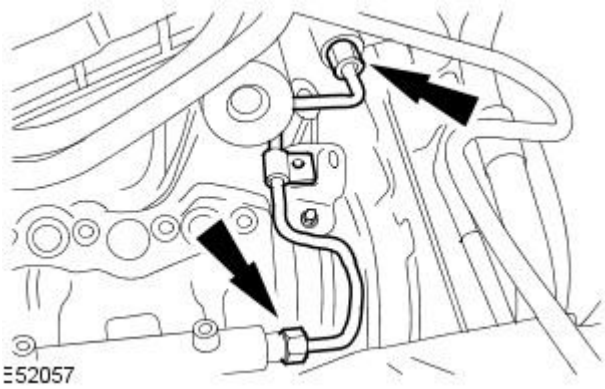


**13.** CAUTIONS:

Make sure the tool used to loosen the high-pressure fuel supply line union is used at the top of the union as this is where there is most material. Failure to follow this instruction may result in damage to the union.

Make sure that the high pressure fuel supply line remains in contact with both the fuel pump and the fuel injection supply manifold until both unions have been detached and cleaned. Failure to follow this instruction may result in foreign matter ingress to the fuel injection system.

While maintaining the pressure on the high-pressure fuel supply line, clean and vacuum foreign material from the line and unions.

Remove the high-pressure fuel supply line.

**14.** Remove the fuel injection supply manifold.

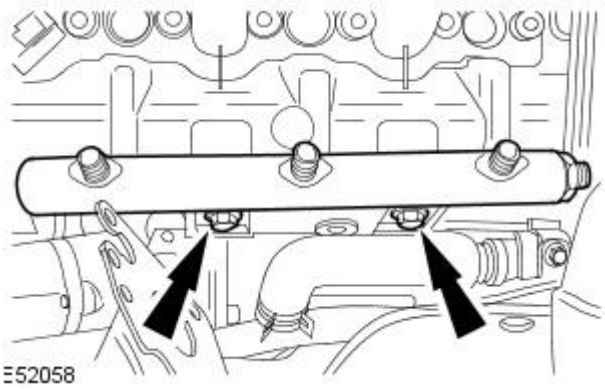


**15.** Remove the fuel injection supply manifold securing bracket .

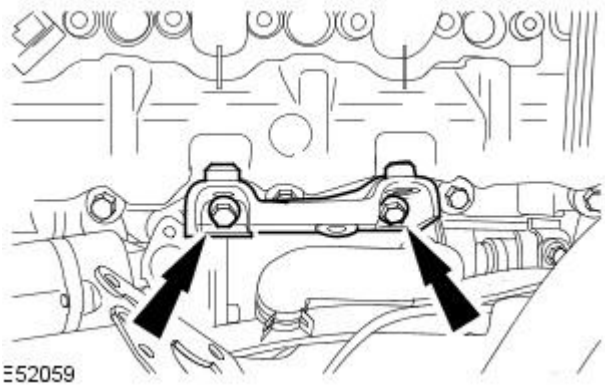


**16.** Remove the engine cover and wiring harness retainers.

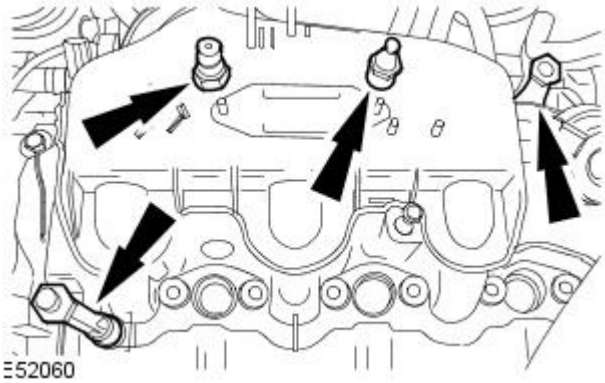


GETtheMANUALS.org

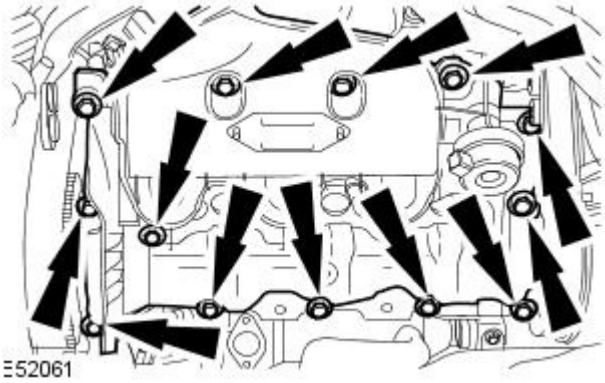


**17.** Remove the left-hand valve cover.

- Remove and discard the valve cover gasket.

**18.** Remove the timing belt.
For additional information, refer to: Timing Belt (303-01C Engine - 2.7L V6 - TdV6, In-vehicle Repair).

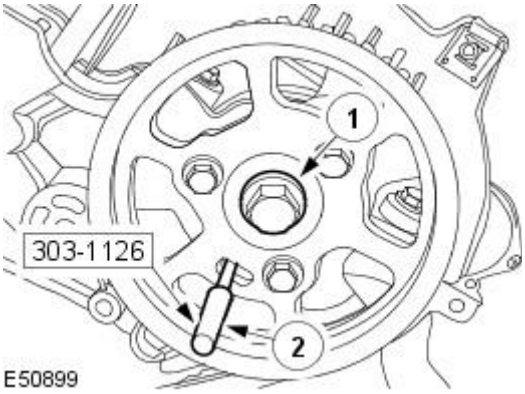


**19.** Remove the special tool.

1. Retain the camshaft sprocket.
2. Remove the special tool.

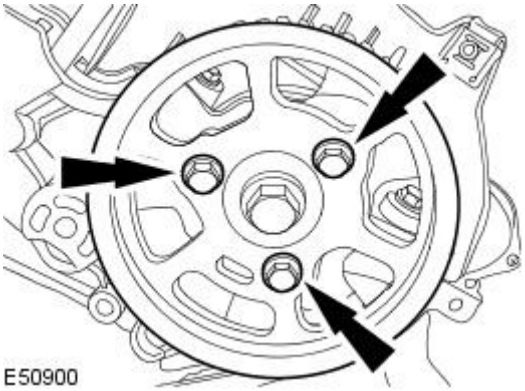


**20.** Remove the camshaft sprocket.

- Remove the camshaft sprocket retaining bolts.

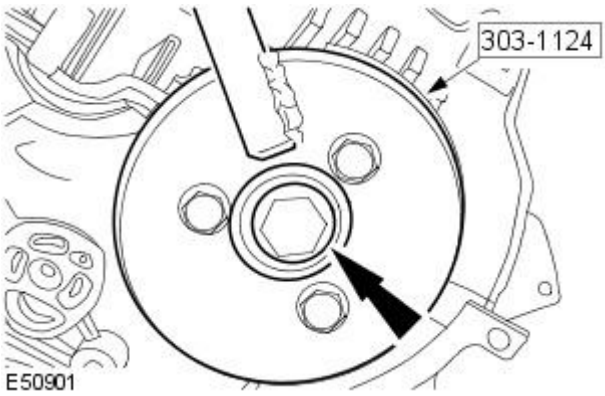


**21.** Using special tool, remove the camshaft sprocket hub.

- Remove the camshaft sprocket hub retaining bolt.

**22.** Remove the fuel injection pump belt.
For additional information, refer to: Fuel Injection Pump Belt (303-05 Accessory Drive, Removal and Installation).

GETtheMANUALS.org

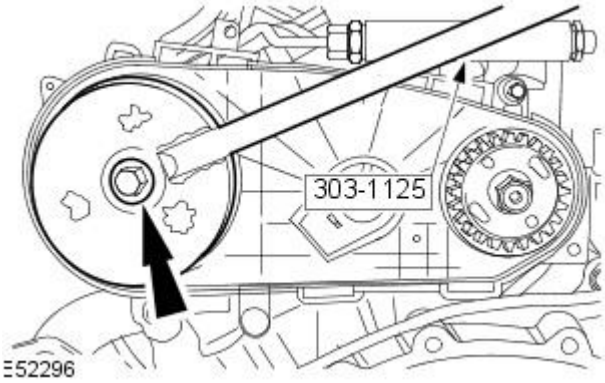


**23.** Remove the camshaft rear pulley retaining bolt.

- Using the special tool, retain the camshaft rear pulley.
- Remove the special tool.

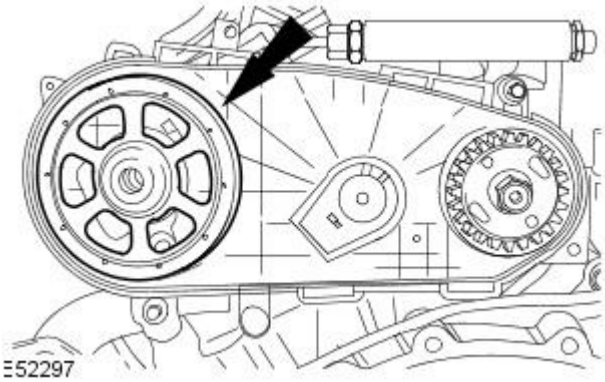


**24.** Remove the camshaft rear pulley.

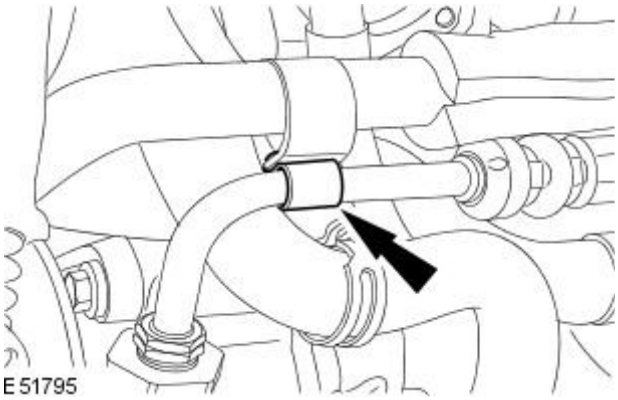


**25.** Detach the EGR coolant inlet tube.

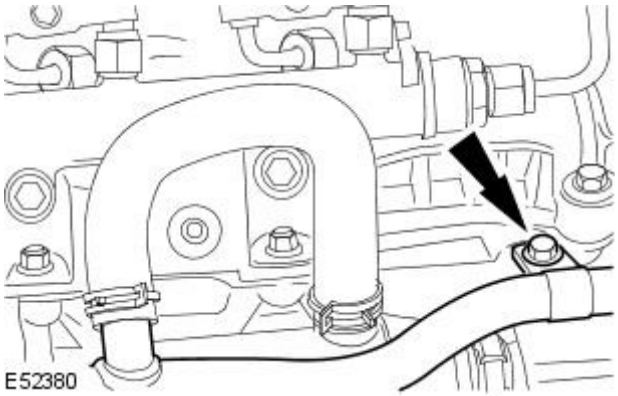


**26.** Detach the EGR coolant inlet tube.

**27.** Raise the vehicle.

**28.** Remove the left-hand catalytic converter.
For additional information, refer to: Catalytic Converter - 2.7L V6 - TdV6 (309-00 Exhaust System, Removal and Installation).

GETtheMANUALS.org

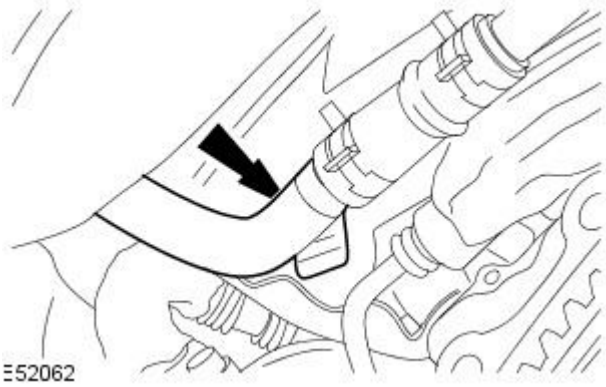


**29.** Detach the EGR coolant inlet tube.

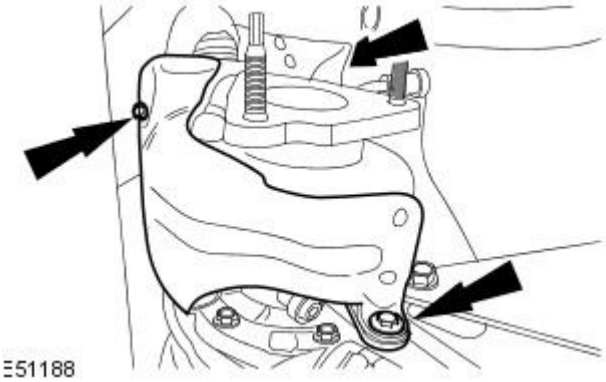


**30.** Remove the turbocharger heat shield.

**31.** Lower the vehicle.

**32.** Remove the fuel injection pump belt rear cover.

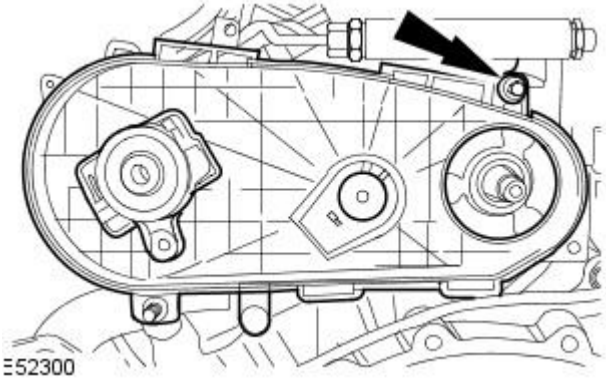


**33.** Retain the secondary timing chain tensioner plunger.

1. Reposition the secondary timing chain tensioner.
2. Retain the secondary timing chain tensioner plunger.

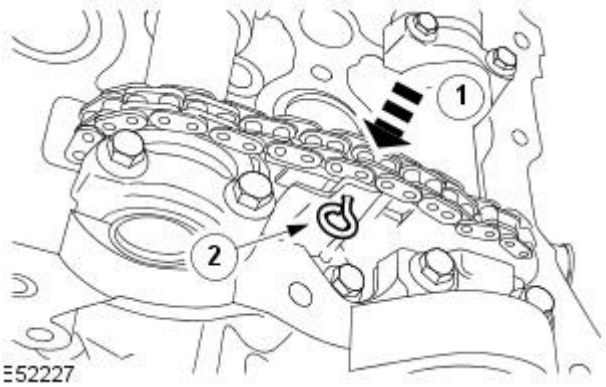


**34.** Remove the camshaft bearing caps evenly.

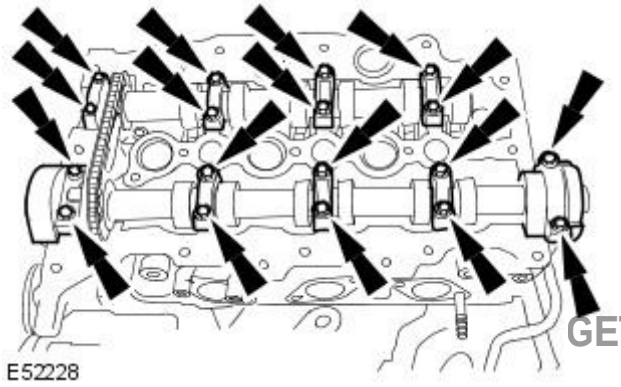


GETtheMANUALS.org

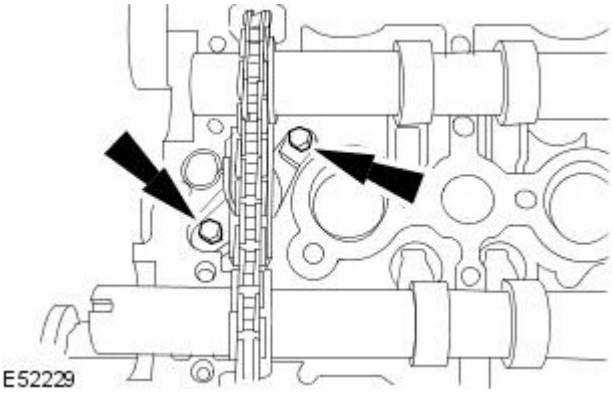


**35.** Remove the secondary timing chain tensioner retaining bolts.

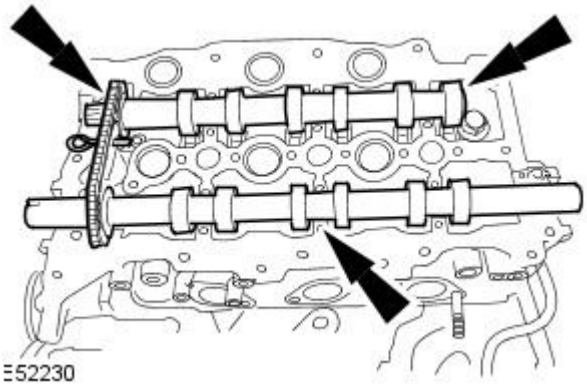


**36.** Remove the left-hand camshafts and secondary timing chain tensioner assembly.

- Discard the left-hand exhaust camshaft seals.

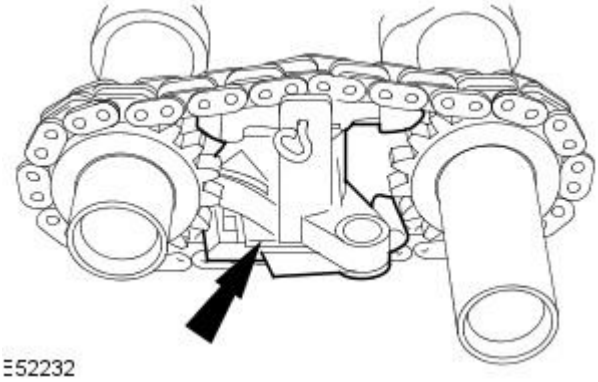


**37.** Remove the secondary timing chain tensioner assembly.

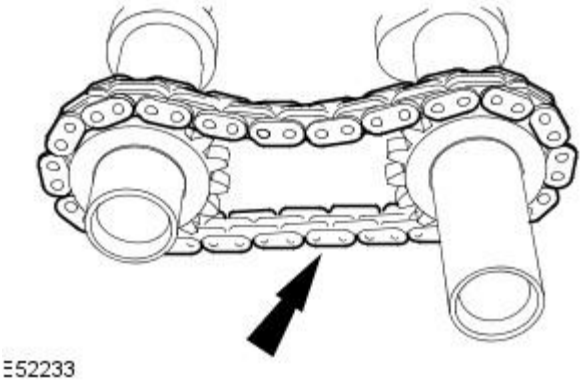


**38.** Remove the camshafts.

- Remove the secondary timing chain from the camshafts.

## Installation

GETtheMANUALS.org

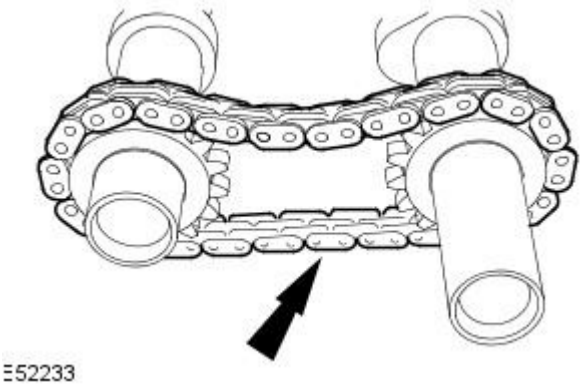
E52233

**1.** WARNINGS:

Wait at least 30 seconds after the engine stops before commencing any repair to the high pressure fuel injection system. Failure to follow this instruction may result in personal injury.

Do not smoke or carry lighted tobacco or open flame of any type when working on or near any fuel related components. Highly flammable mixtures are always present and may ignite. Failure to follow these instructions may result in personal injury.

This procedure involves fuel handling. Be prepared for fuel spillage at all times and always observe fuel handling precautions. Failure to follow this instruction may result in personal injury.

Do not carry out any repairs to the fuel injection system with the engine running. The fuel pressure within the system can be as high as 1650 bar. Failure to follow this instruction may result in personal injury.

• CAUTIONS:

Make sure the workshop area in which the vehicle is being worked on is as clean and as dust free as possible. Foreign matter from work on clutches, brakes or from machining or welding operations can contaminate the fuel system and may result in later malfunction.

Always carry out the cleaning process before carrying out any repairs to the fuel injection system components. Failure to follow this instruction may result in foreign matter ingress to the fuel injection system.

Diesel fuel injection equipment is manufactured to very precise tolerances and fine clearances. It is therefore essential that absolute cleanliness is observed when working with these components. Always install blanking plugs to any open orifices or lines.

Make sure that the colored links on the secondary timing chain align with the dots and scribed line on the sprocket shoulder. Failure to follow this instruction may result in damage to the engine.

Install the camshafts.

- Install the secondary timing chain onto the camshafts.

**2.** Install the secondary timing chain tensioner assembly.

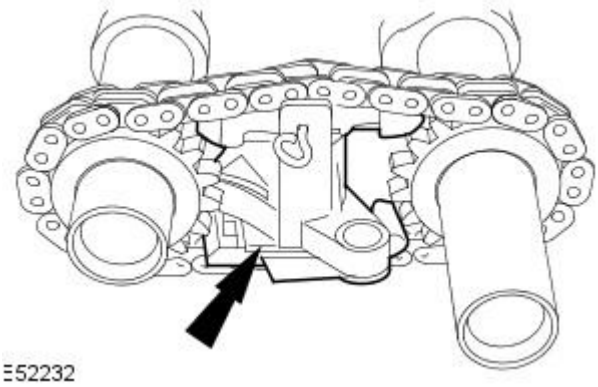
E52232

**3.** CAUTION: Make sure that the dots on the camshafts are aligned at the 12 o'clock position. Failure to follow this instruction may result in damage to the engine.

• NOTE: Lubricate the camshafts and the camshaft bearing caps with oil meeting Jaguar specification prior to installation.

Install the camshafts.

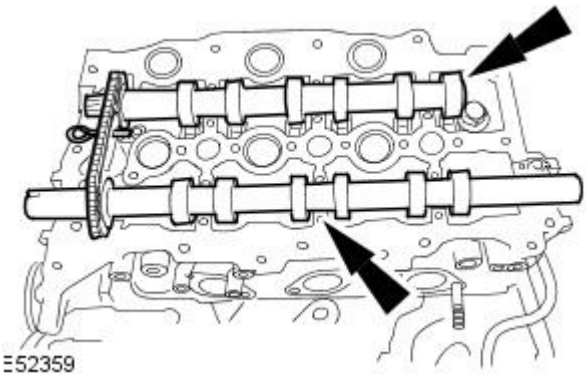
E52359

GETtheMANUALS.org

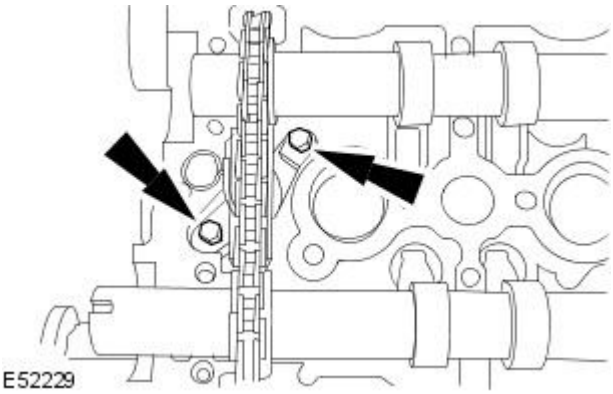


**4.** Install the secondary timing chain tensioner retaining bolts.

- Tighten to 10 Nm.

**5.** Apply Loctite 518 sealant to the exhaust camshaft seal bearing caps.

- Apply Loctite 518 sealant, 2 mm wide, to the left-hand rear and right-hand front camshaft bearing caps.
- Apply Loctite 518 sealant, 7 mm in diameter, to the left-hand front and right-hand rear camshaft bearing caps.

GETtheMANUALS.org

E53719

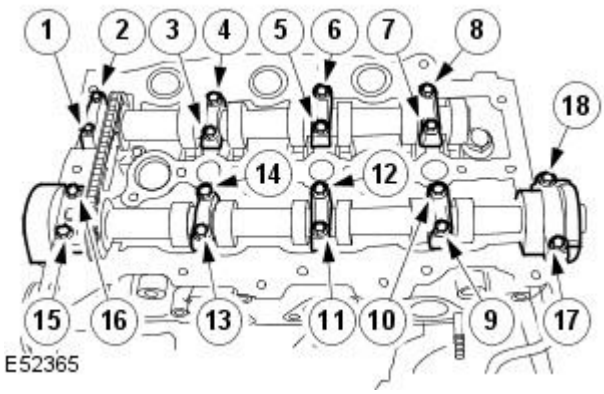


**6.** NOTE: Install the camshaft bearing cap retaining bolts evenly.

Install the camshaft bearing caps in their original position.

- Tighten the retaining bolts in the sequence shown.
- Stage 1: Bolts 1 to 14, 1 Nm.
- Stage 2: Bolts 1 to 14, 5 Nm.
- Stage 3: Bolts 1 to 14, 10 Nm.
- Stage 4: Bolts 15 to 18, 1 Nm.
- Stage 5: Bolts 15 to 18, 5 Nm.
- Stage 6: Bolts 15 to 18, 10 Nm.

GETtheMANUALS.org

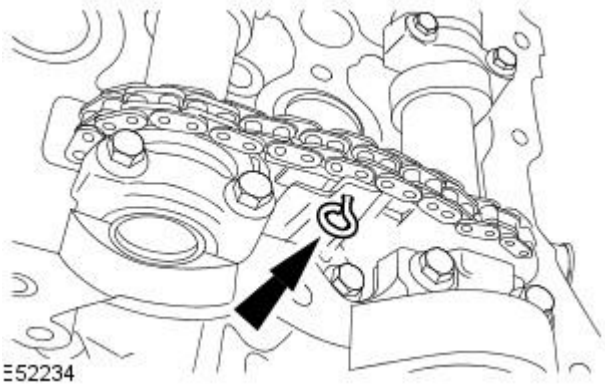


**7.** Remove the secondary timing chain tensioner retaining pin.

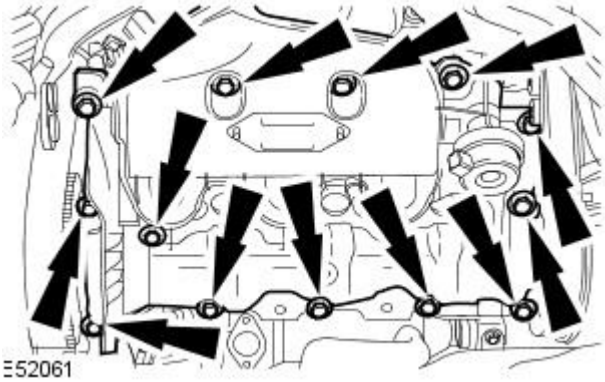


**8.** Install the left-hand valve cover.

- Install a new valve cover gasket.
- Tighten to 10 Nm.

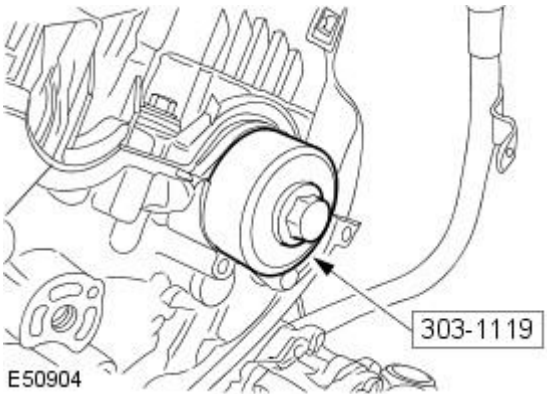


**9.** CAUTION: Do not use any lubricant on the seal or the camshaft. Failure to follow this instruction may result in damage to the vehicle.

• NOTE: Make sure all components are clean and dry.

Using the special tool, install the camshaft front seal.

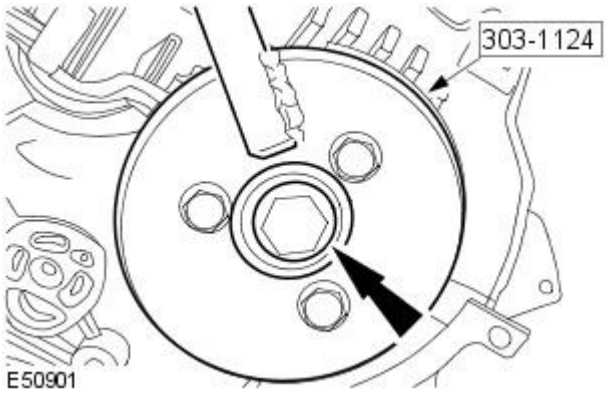


**10.** Using special tool, install the camshaft sprocket hub.

- Install the camshaft sprocket hub retaining bolt.
- Stage 1: Tighten to 80 Nm
- Stage 2: Tighten to 80 degrees

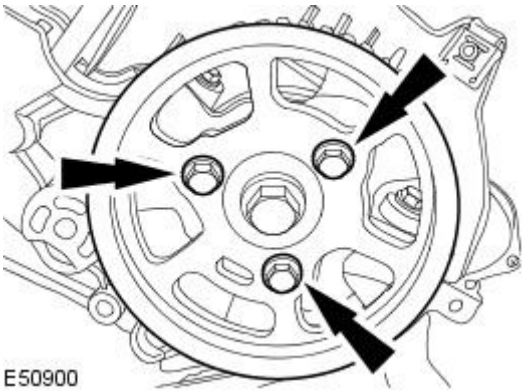


**11.** Install the camshaft sprocket.

- Install the camshaft sprocket retaining bolts.

GETtheMANUALS.org

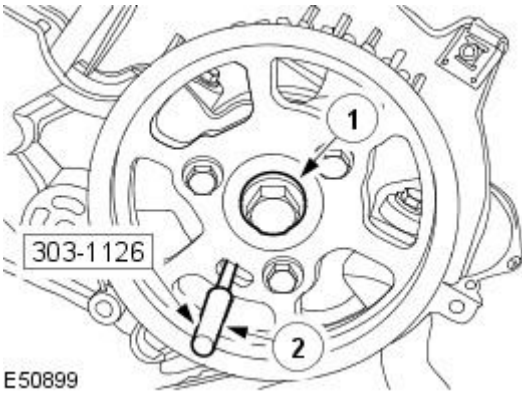


**12.** Install the special tool.

1. Retain the camshaft sprocket.
2. Install the special tool.

**13.** Install the timing belt.
For additional information, refer to: Timing Belt (303-01C Engine - 2.7L V6 - TdV6, In-vehicle Repair).

**14.** Install the fuel injection pump belt rear cover.

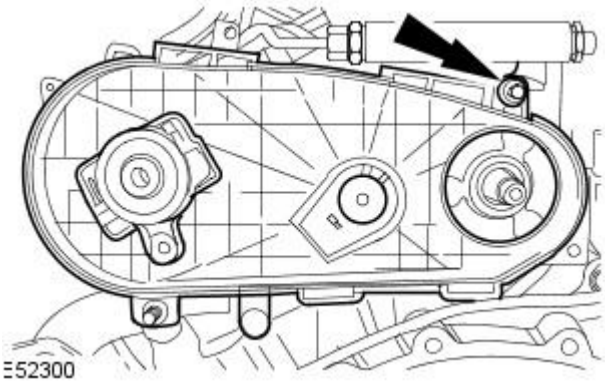


**15.** Raise the vehicle.

**16.** Install the turbocharger heat shield.

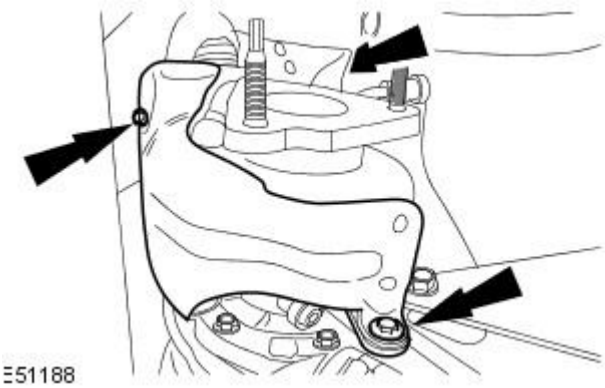


**17.** Attach the EGR coolant inlet tube.

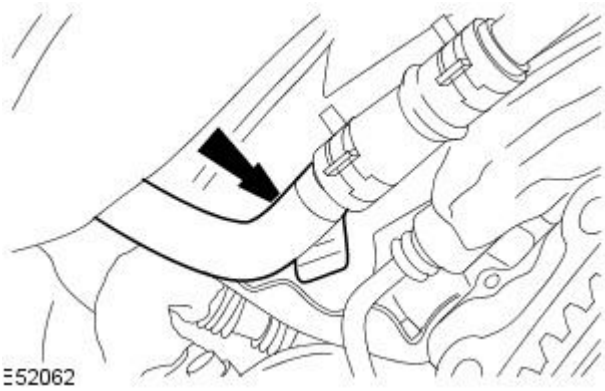


**18.** Install the left-hand catalytic converter.
For additional information, refer to: Catalytic Converter - 2.7L V6 - TdV6 (309-00 Exhaust System, Removal and Installation).

**19.** Lower the vehicle.

GETtheMANUALS.org

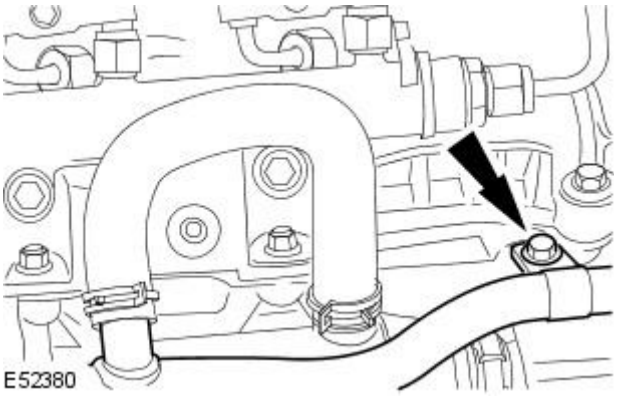


**20.** Attach the EGR coolant inlet tube.

- Tighten to 10 Nm.

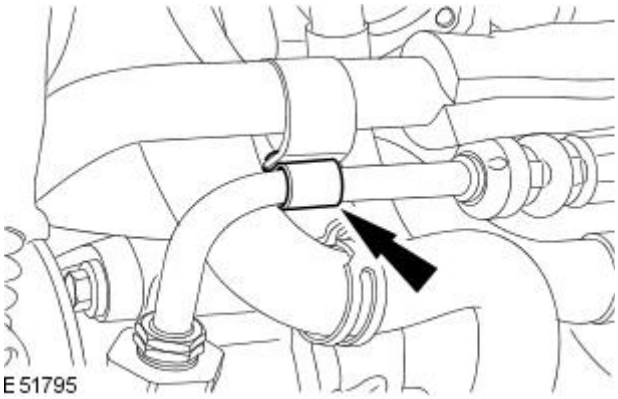


**21.** Attach the EGR coolant inlet tube.

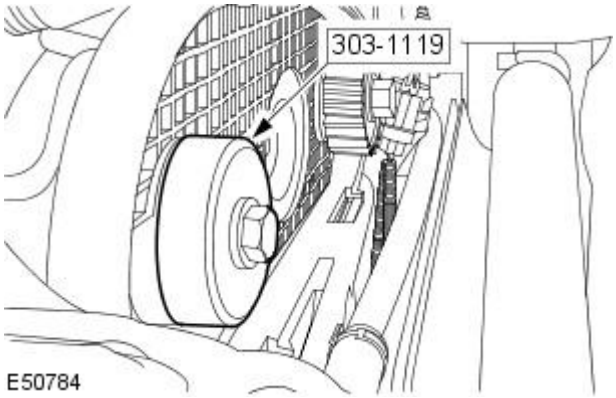


**22.** CAUTIONS:

A new camshaft seal is supplied with an transit sleeve that must not be removed until the camshaft front seal is fully installed. Failure to follow this instruction may result in damage to the vehicle.

Do not use any lubricant on the seal, the transit sleeve or the camshaft. Failure to follow this instruction may result in damage to the vehicle.

• NOTE: Make sure all components are clean and dry.

Using the special tool, install the camshaft rear seal.

- Remove and discard the transit sleeve.

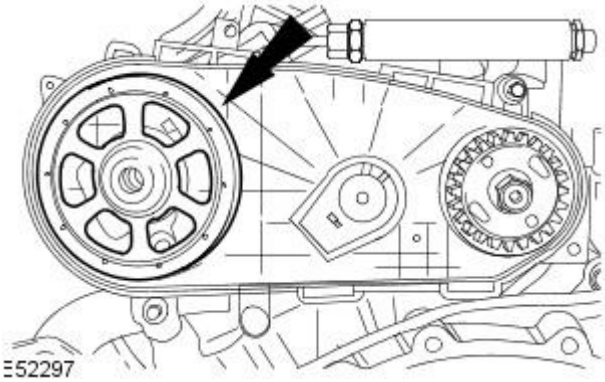


**23.** Install the camshaft rear pulley.

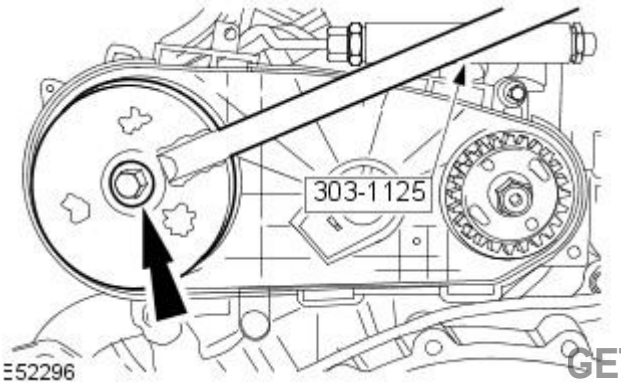


**24.** Install the camshaft rear pulley retaining bolt.

- Using the special tool, retain the camshaft rear pulley.
- Remove the special tool.
- Stage 1: Tighten to 80 Nm
- Stage 2: Tighten to 80 degrees

GETtheMANUALS.org

**25.** Install the fuel injection pump belt.
For additional information, refer to: Fuel Injection Pump Belt (303-05 Accessory Drive, Removal and Installation).

**26.** Install the engine cover and wiring harness retainers.

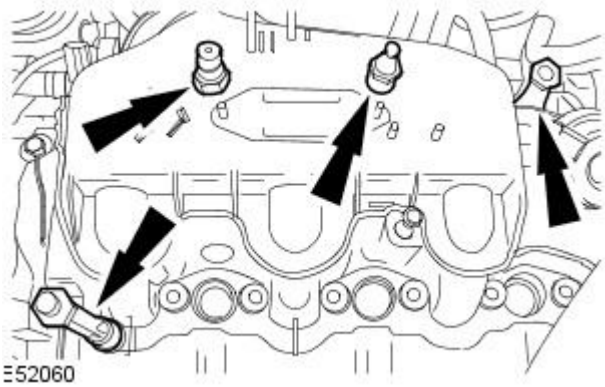


**27.** Install the fuel injection supply manifold securing bracket.

- Tighten to 24 Nm.

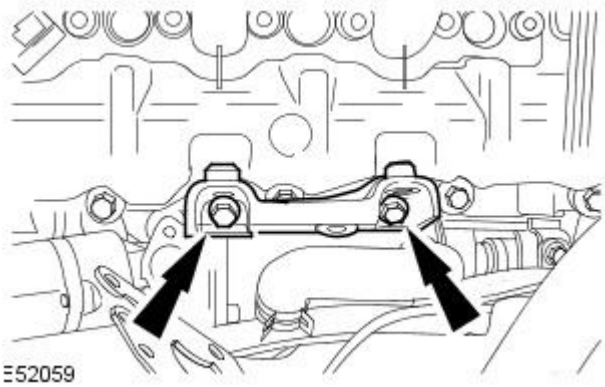


**28.** Install the fuel injection supply manifold.

- Tighten to 24 Nm.

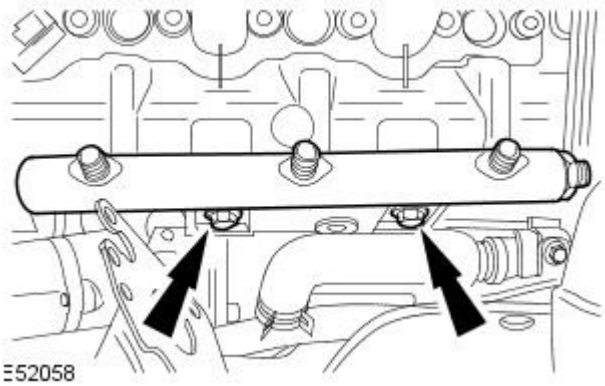


**29.** Install new high-pressure fuel supply lines.

- Remove and discard the blanking caps.
- Tighten the high-pressure fuel supply line in the sequence shown in four stages:
  1. Stage 1: Tighten the high-pressure fuel supply line union 1 to 15 Nm.
  2. Stage 2: Tighten the high-pressure fuel supply line union 2 to 15 Nm.
  3. Stage 3: Tighten the high-pressure fuel supply line union 1 to 30 Nm.
  4. Stage 4: Tighten the high-pressure fuel supply line union 2 to 30 Nm.

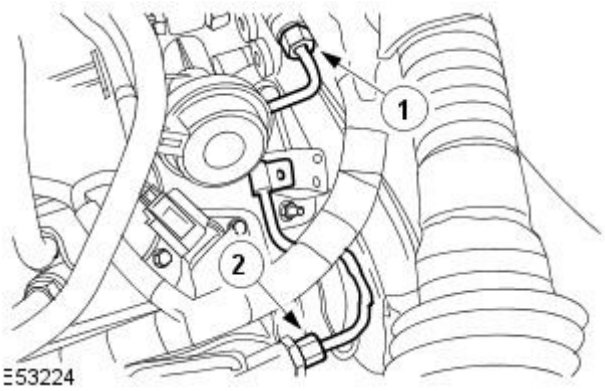


GETtheMANUALS.org

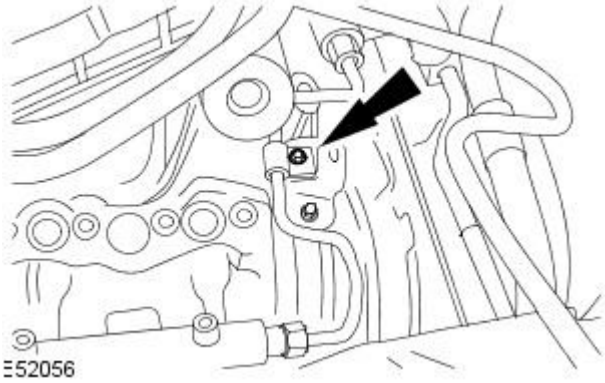


**30.** Install the fuel injection pump supply line retaining bolt.

- Tighten to 10 Nm.

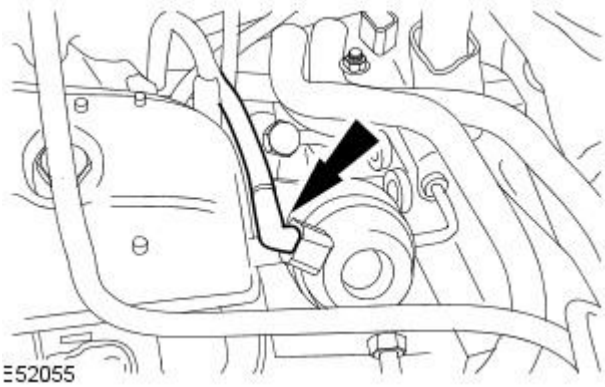


**31.** Connect the vacuum pipe.

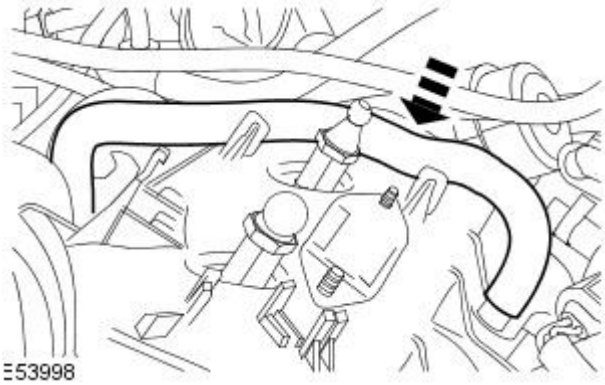


**32.** Attach the engine breather pipe.

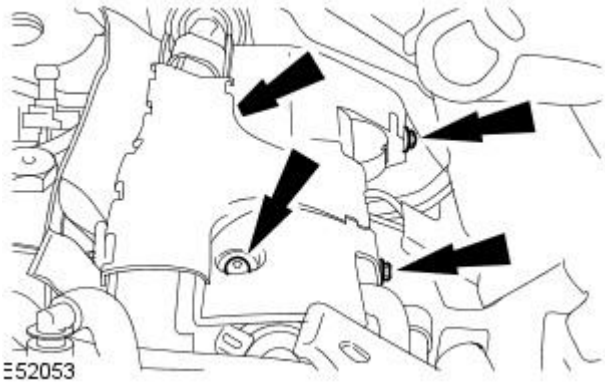


**33.** Install the engine harness retaining bolts.

- Tighten to 4 Nm.

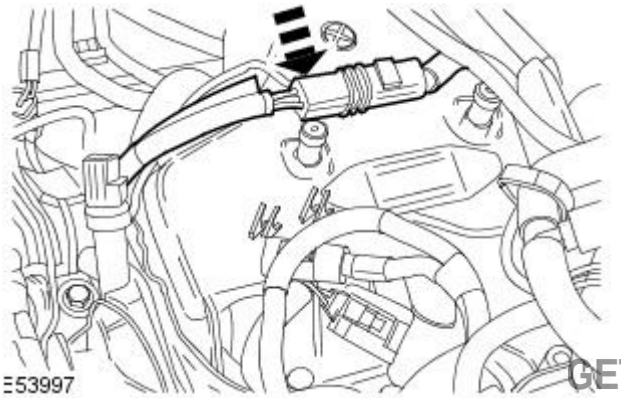


**34.** Attach the engine harness.

GETtheMANUALS.org

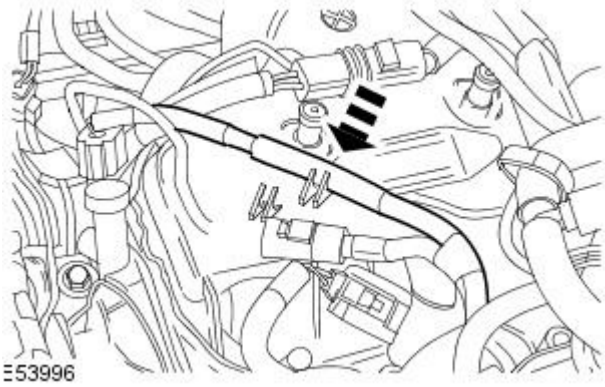


**35.** Attach the engine harness.

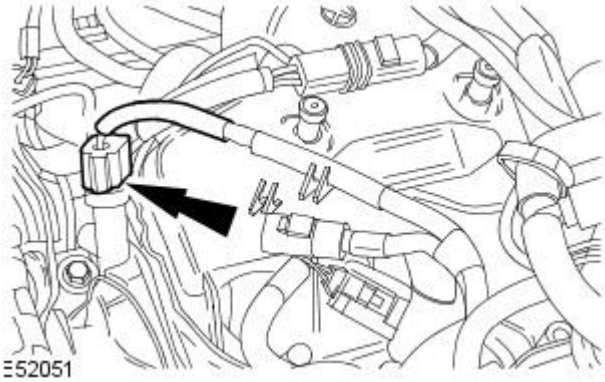


**36.** Connect the electrical connector.

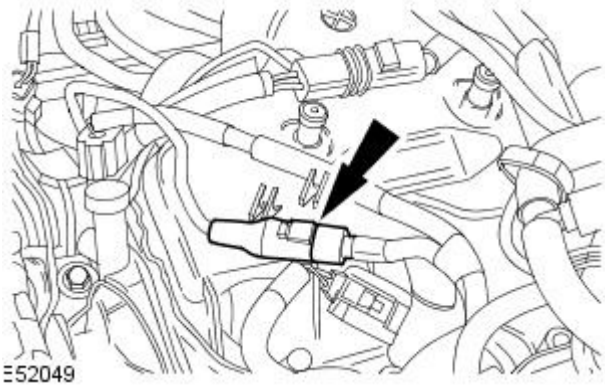


**37.** Connect the electrical connector.

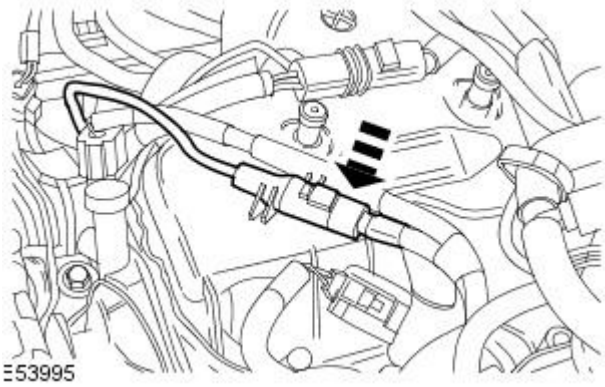


**38.** Attach the electrical connector onto the left-hand valve cover.

**39.** Install the fuel injectors.
For additional information, refer to: Fuel Injector (303-04C Fuel Charging and Controls - 2.7L V6 - TdV6, Removal and Installation).

**40.** Install the intake air shut off throttle.
For additional information, refer to: Intake Air Shutoff Throttle (303-04C Fuel Charging and Controls - 2.7L V6 - TdV6, Removal and Installation).

GETtheMANUALS.org

# Engine - 2.7L V6 - TdV6 - Crankshaft Front Seal

In-vehicle Repair

| Special Tool(s) | |
|---|---|
| 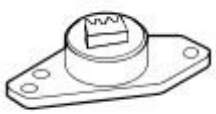 E52719 | Locking Tool Flywheel<br><br>303-1123 |
| E52708 | Timing Pin - Manual Transmission<br><br>303-1116 |
| 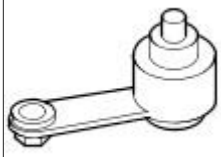 E52709 | Timing Pin - Automatic Transmission<br><br>303-1117 |
| 303D121 | Remover - Crankshaft Pulley<br><br>303-D121 |
| 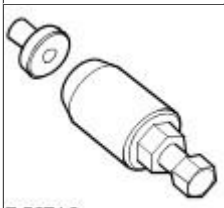 E52716 | Crankshaft Seal Remover<br><br>303-1120 |
| E52718 | Crankshaft Seal Sleave<br><br>303-1122 |
| E52717 | Crankshaft Seal Installer<br><br>303-1121 |

## Removal

All vehicles

1. Remove the timing belt.
   For additional information, refer to: Timing Belt (303-01C Engine - 2.7L V6 - TdV6, In-vehicle Repair).
2. Remove the starter motor.
   For additional information, refer to: Starter Motor - 2.7L V6 - TdV6 (303-06 Starting System, Removal and Installation).

Vehicles with automatic transmission

GETtheMANUALS.org

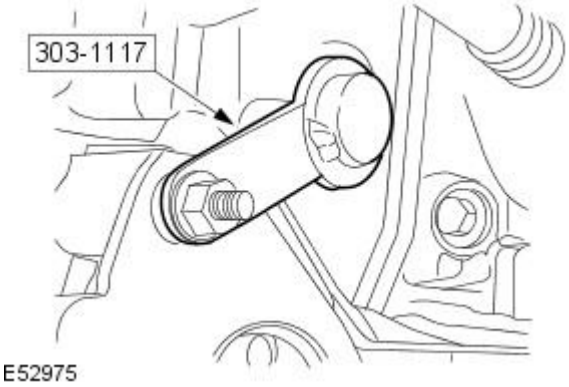


**3.** Remove the special tool.

Vehicles with manual transmission

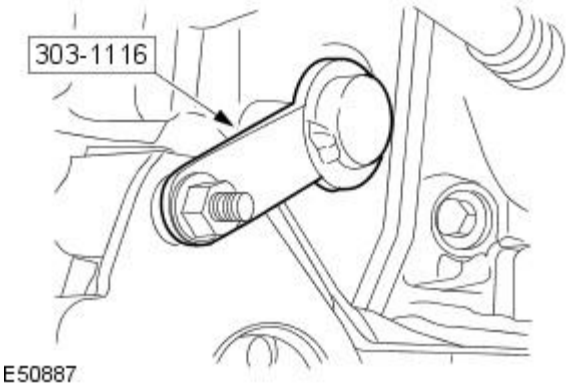


**4.** Remove the special tool.

All vehicles

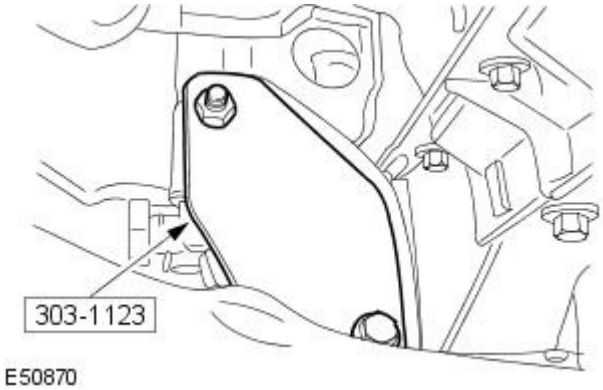


**5.** Install the special tool.

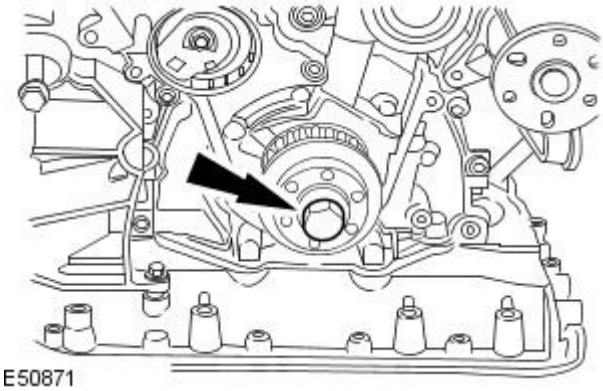


**6.** Loosen the crankshaft pulley retaining bolt.

GETtheMANUALS.org

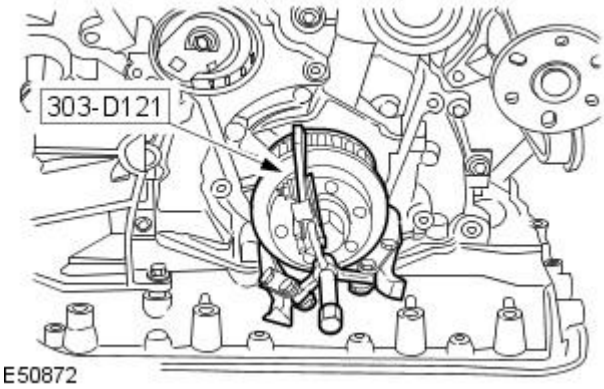

E50872

**7.** Using the special tool, release the crankshaft pulley.

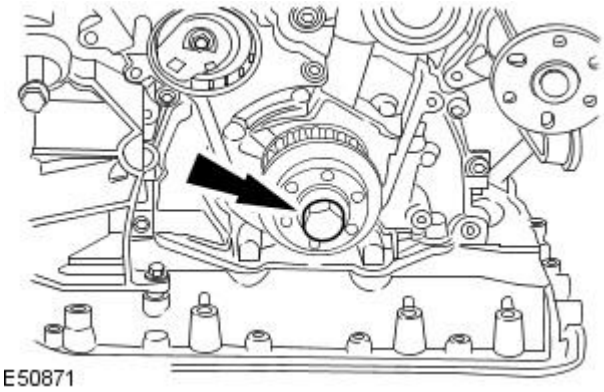
E50871

**8.** CAUTION: The crankshaft pulley retaining bolt must not be re-used.

Remove the crankshaft pulley retaining bolt.

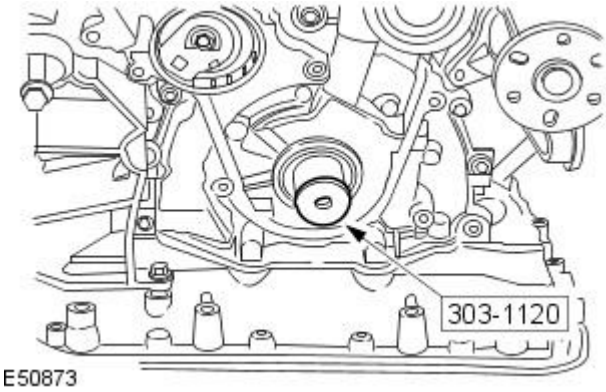

E50873

**9.** Install the special tool to the crankshaft.

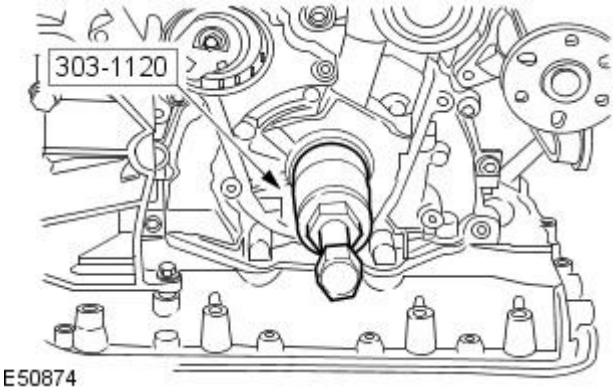

E50874

**10.** Using the special tool, remove the crankshaft front seal.

## Installation

All vehicles

GETtheMANUALS.org

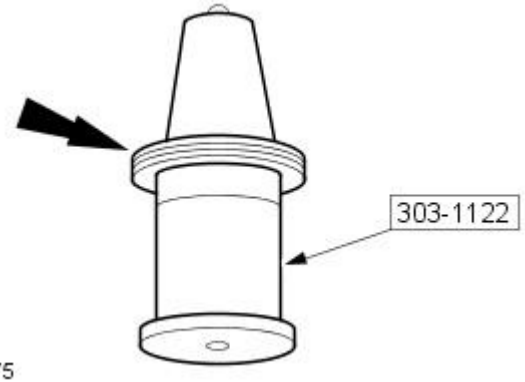

E50875

1. CAUTION: Do not use any lubricant on the crankshaft front seal, the special tool or the crankshaft. Failure to follow this instruction may result in damage to the vehicle.

• NOTE: Make sure all components are clean and dry.

Install a new crankshaft front seal to the special tool.

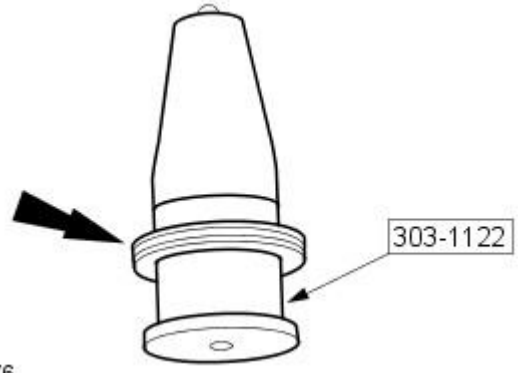

E50876

2. Repostion the crankshaft front seal along the special tool.

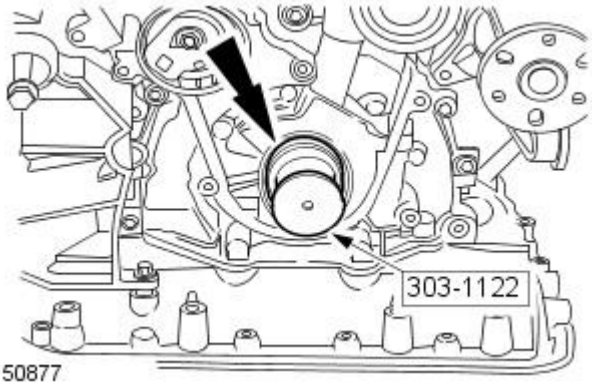

E50877

3. Using the special tool, install the crankshaft front seal to the crankshaft.

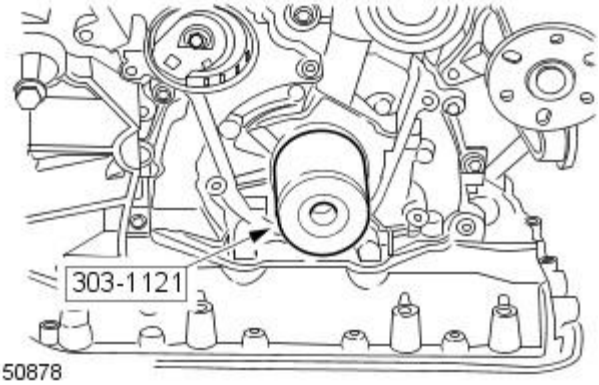

E50878

4. Remove the special tool from the crankshaft.
5. Install the special tool to the crankshaft.

GETtheMANUALS.org

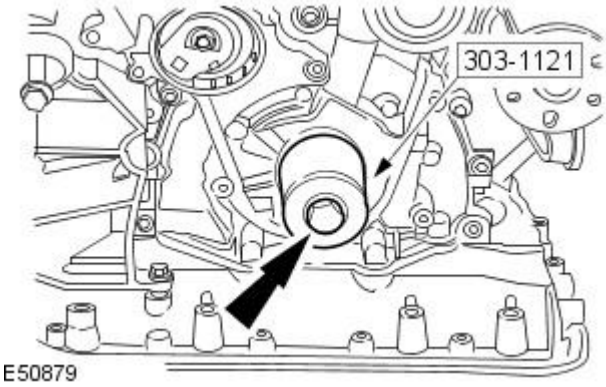

E50879

**6.** Using the special tool, fully install the crankshaft front seal.

- Install the crankshaft pulley retaining bolt.

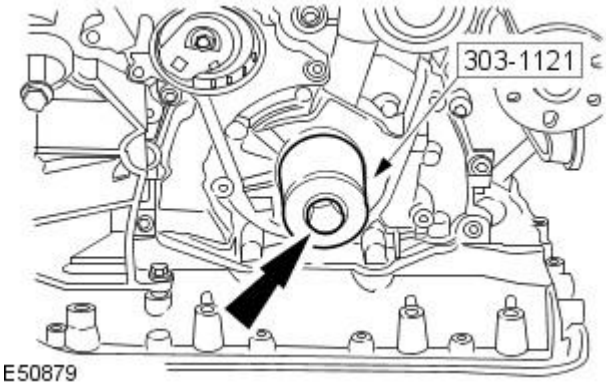

E50879

**7.** CAUTION: The crankshaft pulley retaining bolt must not be re-used.

Remove the special tool.

- Remove and discard the crankshaft pulley retaining bolt.

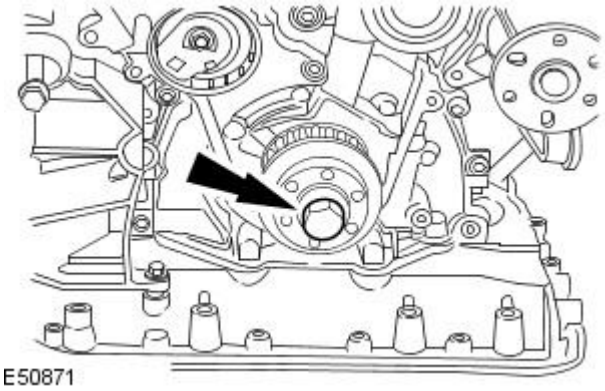
E50871

**8.** CAUTIONS:

The crankshaft pulley retaining bolt must not be re-used.

The crankshaft pulley retaining bolt must be tighten in two stages.

Install the crankshaft pulley retaining bolt.

- Stage 1: Tighten to 100 Nm.
- Stage 2: Tighten to 90 degrees.

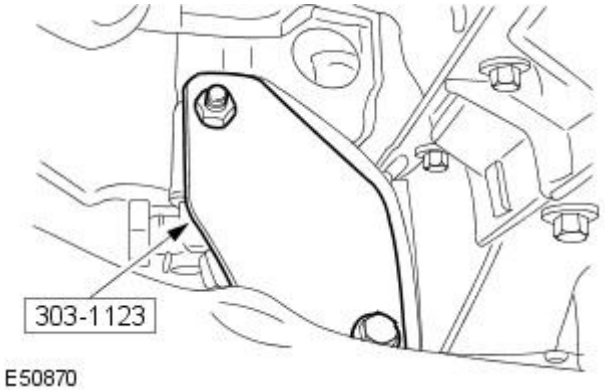

E50870

**9.** Remove the special tool.

Vehicles with manual transmission

GETtheMANUALS.org

**10.** Install the special tool.

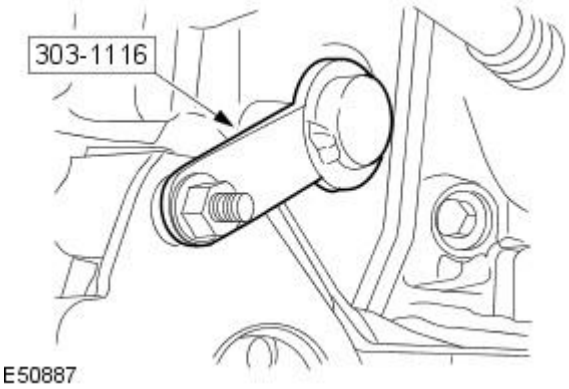


Vehicles with automatic transmission

**11.** Install the special tool.

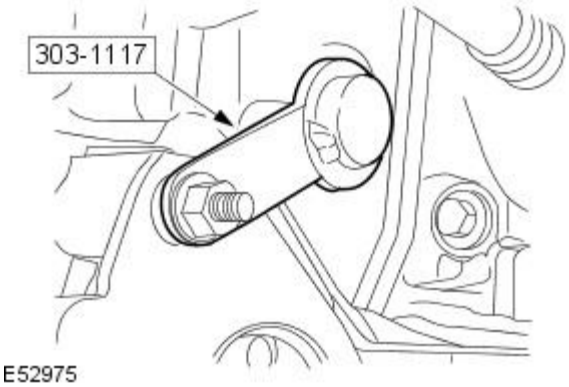


All vehicles

**12.** Install the starter motor.
For additional information, refer to: Starter Motor - 2.7L V6 - TdV6 (303-06 Starting System, Removal and Installation).

**13.** Install the timing belt.
For additional information, refer to: Timing Belt (303-01C Engine - 2.7L V6 - TdV6, In-vehicle Repair).

GETtheMANUALS.org

# Engine - 2.7L V6 - TdV6 - Crankshaft Rear Seal

In-vehicle Repair

## Removal

1. Remove the crankshaft position (CKP) sensor ring.
   For additional information, refer to: Crankshaft Position (CKP) Sensor Ring (303-14C Electronic Engine Controls - 2.7L V6 - TdV6, Removal and Installation).
2. Remove the crankshaft rear seal retaining bolts.

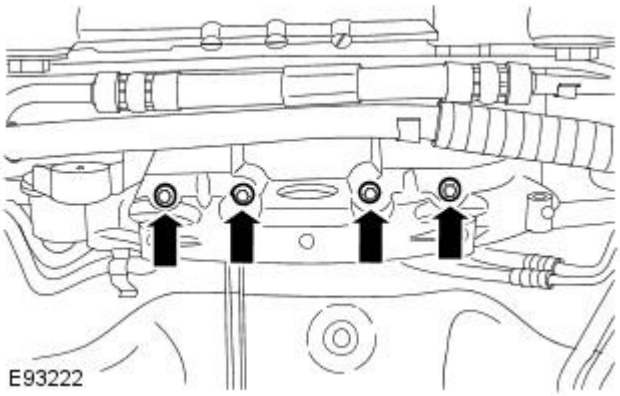


3. Remove the crankshaft rear seal.
   - Remove the retaining bolts.

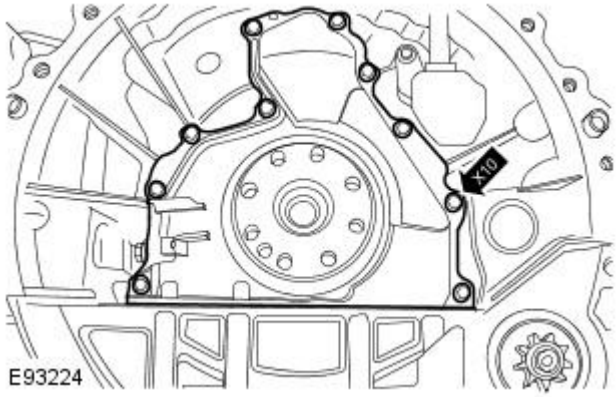


## Installation

CAUTION: Make sure the crankshaft rear seal is installed correctly.

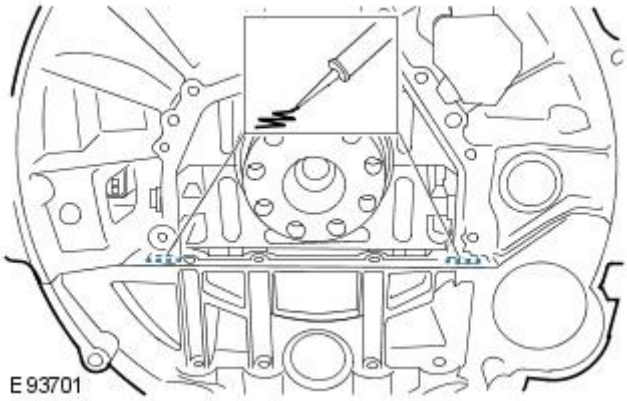


1. NOTE: Make sure the crankshaft rear seal mating faces are clean and dry.

   Apply a 8 mm bead of sealant to the cylinder block in the areas shown.
   For additional information, refer to: Specifications (303-01C Engine - 2.7L V6 - TdV6, Specifications).

GETtheMANUALS.org

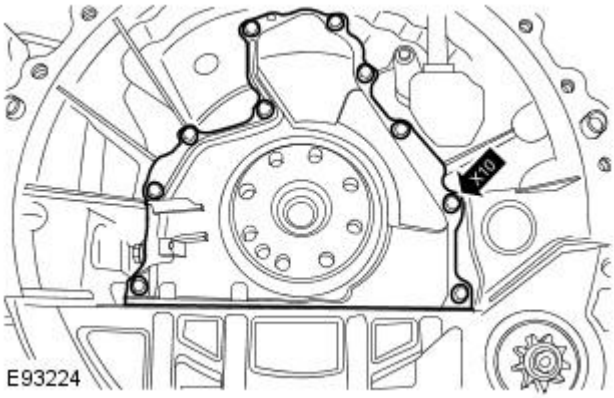


**2.** Tighten to 10 Nm (7 lb.ft).

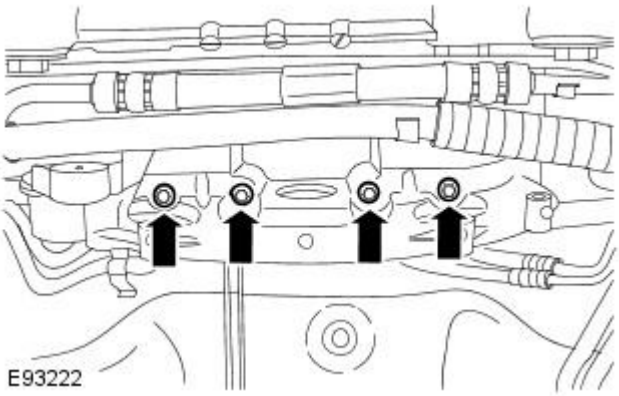


**3.** Tighten to 10 Nm (7 lb.ft).

**4.** Install the CKP sensor ring.
For additional information, refer to: Crankshaft Position (CKP) Sensor Ring (303-14C Electronic Engine Controls - 2.7L V6 - TdV6, Removal and Installation).

GETtheMANUALS.org

# Engine - 2.7L V6 - TdV6 - Crankshaft Vibration Damper

In-vehicle Repair

| Special Tool(s) | |
|---|---|
| 303-703 | Accessory belt detensioner<br><br>303-703 |

## Removal

1. Disconnect the battery ground cable.
   For additional information, refer to: Battery Disconnect (414-01, General Procedures).
2. Remove the air deflector.
   For additional information, refer to: Air Deflector (501-02, Removal and Installation).
3. Detach the accessory drive belt.
   1. Using the special tool, rotate the belt tensioner counter clockwise.
   2. Detach the accessory drive belt.

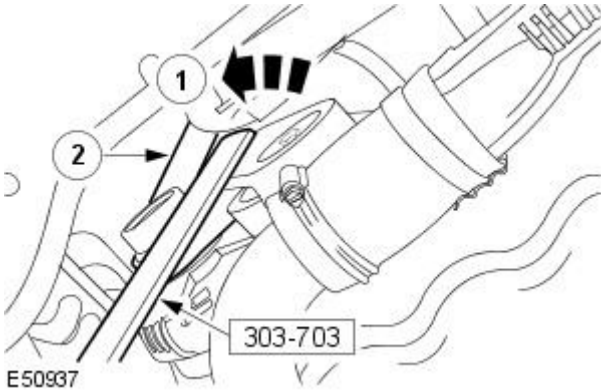


4. Remove the crankshaft vibration damper.

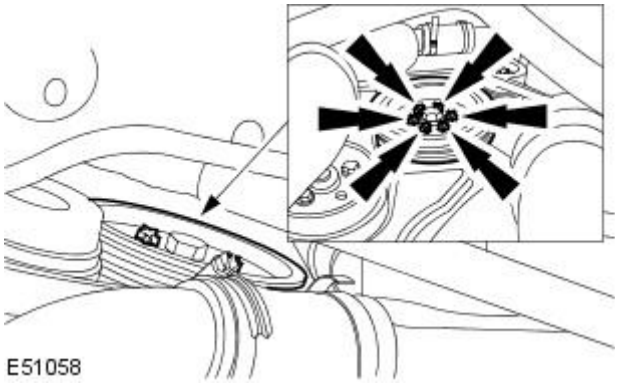


## Installation

1. To install, reverse the removal procedure.
   - Tighten to 14 Nm.

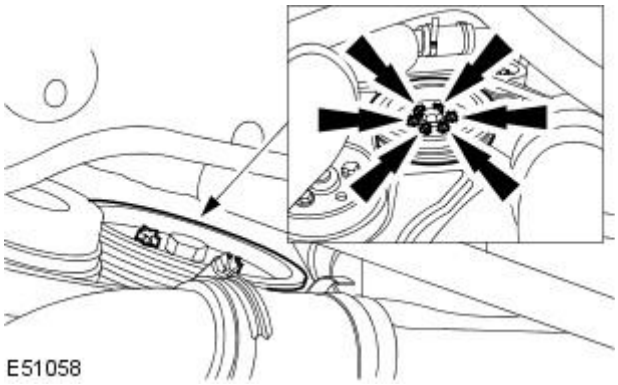


GETtheMANUALS.org

# Engine - 2.7L V6 - TdV6 - Cylinder Head LH

In-vehicle Repair

## Removal

1. Remove the left-hand camshafts.
   For additional information, refer to: Camshafts LH (303-01C Engine - 2.7L V6 - TdV6, In-vehicle Repair).

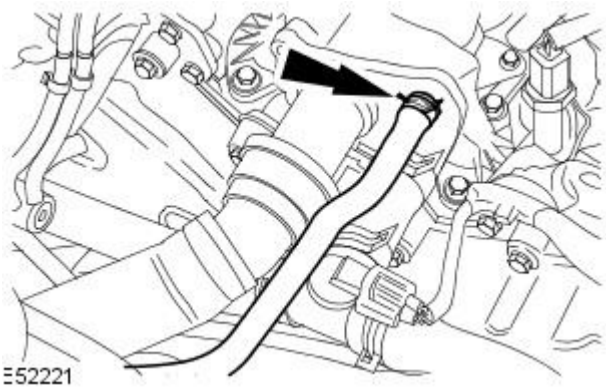


2. Detach the expansion tank hose from cylinder head coolant outlet assembly.

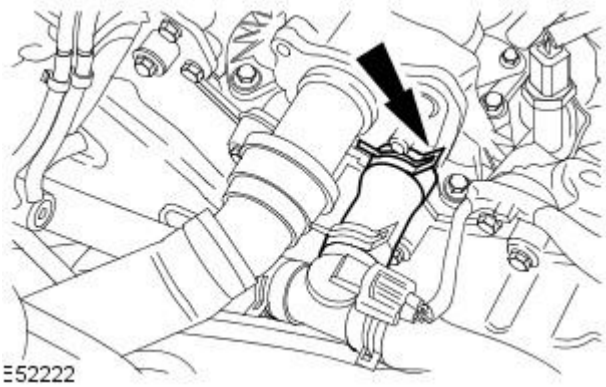


3. Detach the engine coolant hose from the cylinder head coolant outlet assembly.

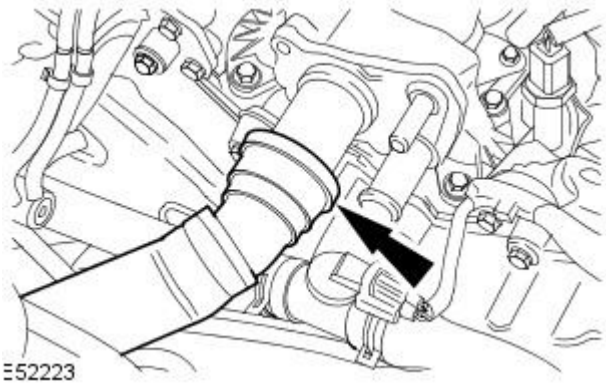


4. Detach the radiator top hose from the cylinder head coolant outlet assembly.

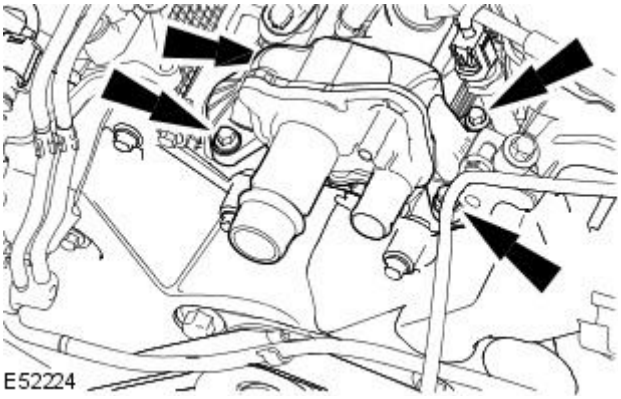


5. NOTE: Discard the O-ring seals.

   Remove the cylinder head coolant outlet assembly.

6. Remove the left-hand cylinder head glow plugs.
   For additional information, refer to: Glow Plugs (303-07C Glow Plug System, Removal and Installation).

GETtheMANUALS.org

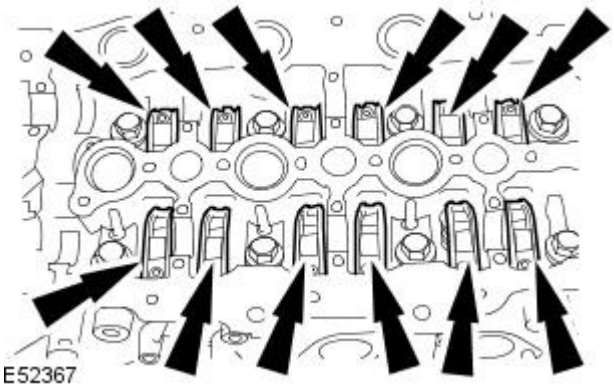


**7.** Remove the hydraulic adjuster and rocker assemblies.

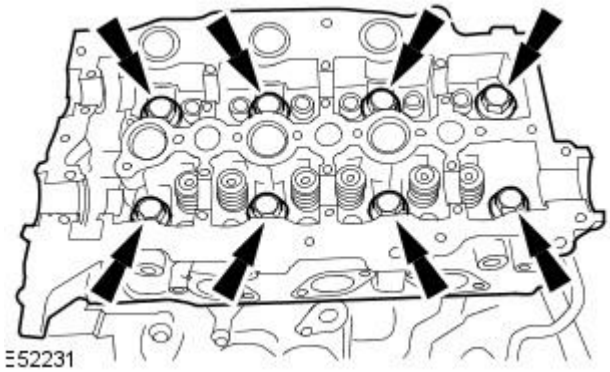


**8.** CAUTION: Only use a plastic scrapper to clean off the old gasket.

Remove the left-hand cylinder head assembly.

- Remove and discard the left-hand cylinder head retaining bolts.
- Remove and discard the left-hand cylinder head gasket.

## Installation

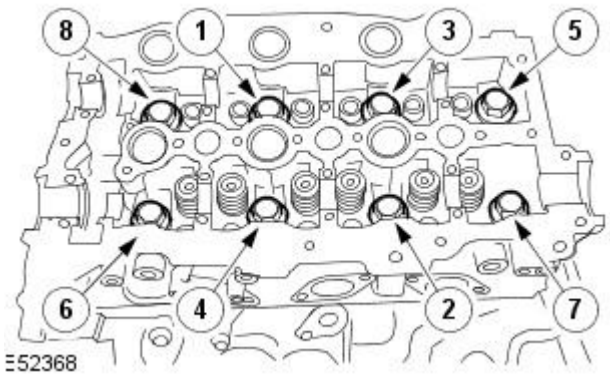


**1.** CAUTION: Use care when installing the cylinder head. Damage to the cylinder block, cylinder head or the cylinder head gasket may result.

• NOTE: Install a new cylinder head gasket.

• NOTE: The head gaskets must be installed over the cylinder head to block dowels.

• NOTE: Make sure the cylinder head is installed in its original position.

• NOTE: Tighten the retaining bolts in the indicated sequence in four stages.

Install the cylinder head and install new cylinder head retaining bolts.

- Stage 1: Tighten to 20 Nm.
- Stage 2: Tighten to 40 Nm.
- Stage 3: Tighten to 80 Nm.
- Stage 4: Tighten to 180 degrees.

**2.** Install the hydraulic adjuster and rocker assemblies.

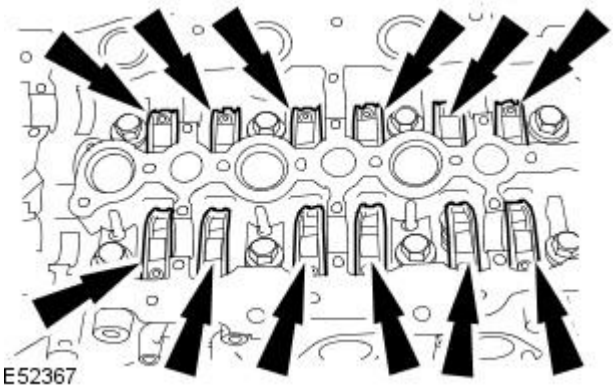


**3.** Install the left-hand cylinder head glow plugs.
For additional information, refer to: Glow Plugs (303-07C Glow Plug System, Removal and Installation).

GETtheMANUALS.org

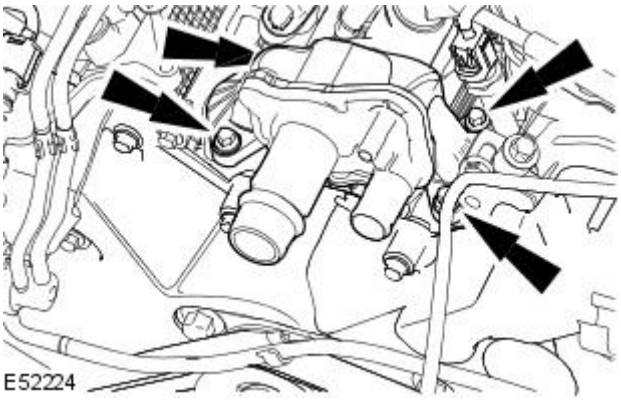


**4.** NOTE: Install new O-ring seals.

Install the cylinder head coolant outlet assembly.

- Tighten to 10 Nm.

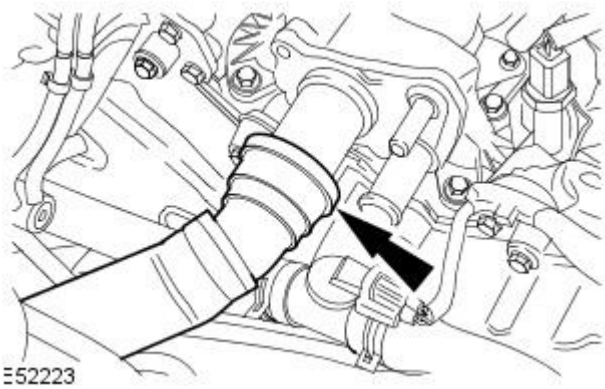


**5.** Attach the radiator top hose onto the cylinder head coolant outlet assembly.

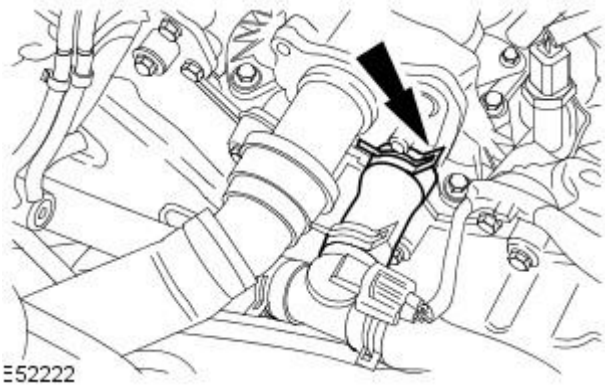


**6.** Attach the engine coolant hose onto the cylinder head coolant outlet assembly.

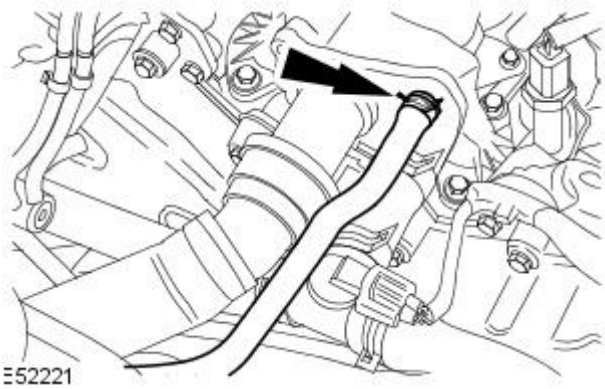


**7.** Attach the expansion tank hose onto cylinder head coolant outlet assembly.

**8.** Install the left-hand camshafts.
For additional information, refer to: Camshafts LH (303-01C Engine - 2.7L V6 - TdV6, In-vehicle Repair).

GETtheMANUALS.org

# Engine - 2.7L V6 - TdV6 - Engine Mount LH

In-vehicle Repair

| Special Tool(s) | |
|---|---|
| E52720 | Engine lifting brackets<br><br>303-1129 |
| 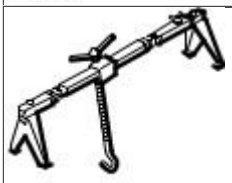 303-021 | Engine Support Beam<br><br>303-021 |
| 502-005 | Subframe Alignment Bolt<br><br>502-005 |

## Removal

**1.** Remove the filler cap.

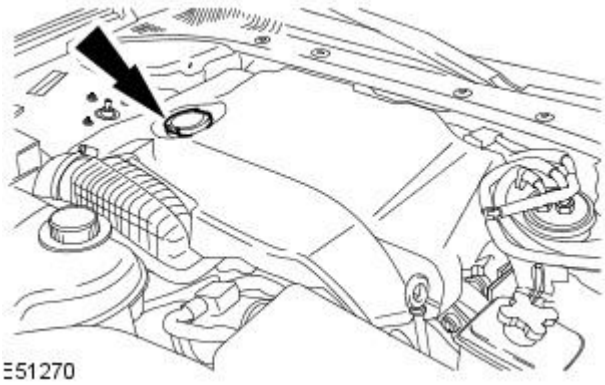


**2.** Remove the engine cover.

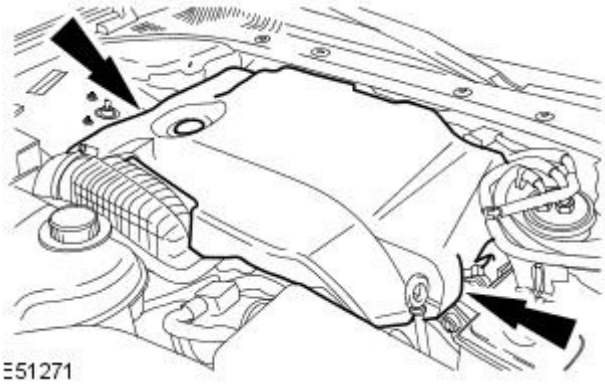


**3.** Install the special tool.

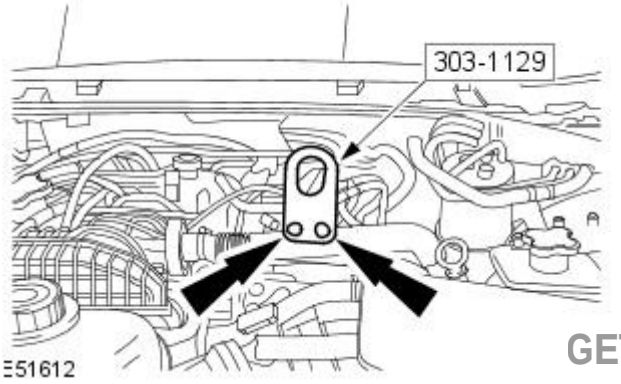


GETtheMANUALS.org

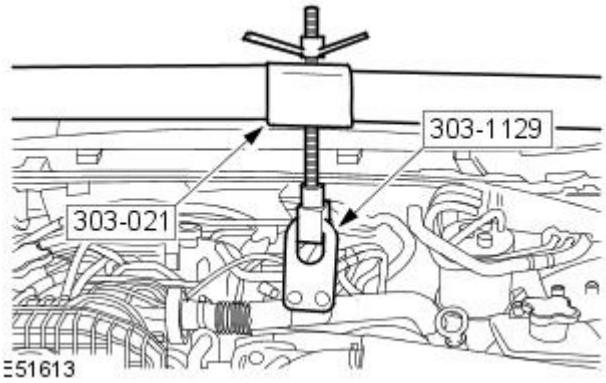


**4.** Install the special tool.

- Rotate the special tool adjustment bolt a suitable amount of turns to support the engine.

**5.** Remove the air deflector.
For additional information, refer to: Air Deflector (501-02 Front End Body Panels, Removal and Installation).

**6.** Remove the retaining bolt.

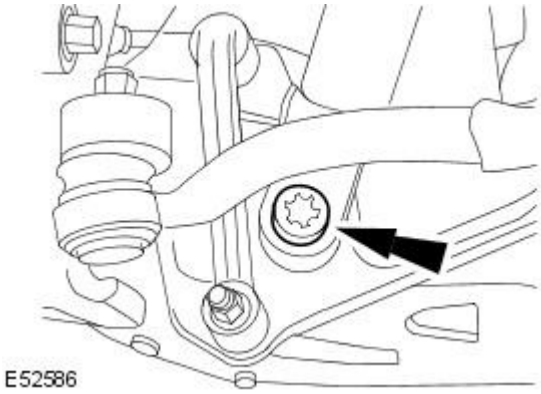


**7.** Detach the steering gear.

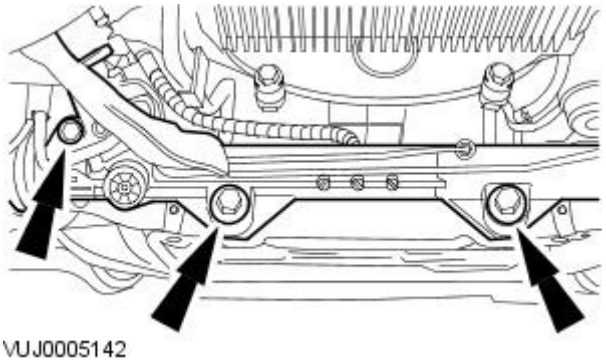


**8.** Secure the steering gear.

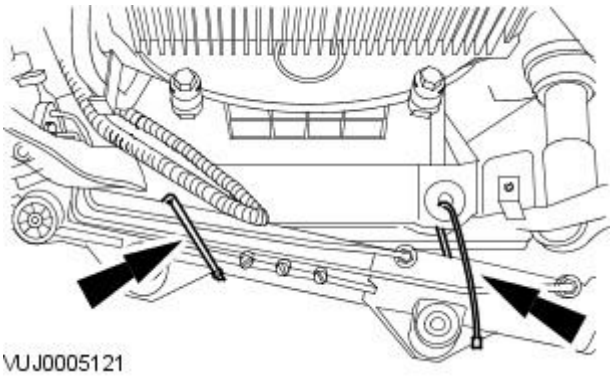


**9.** Remove the retaining nut.

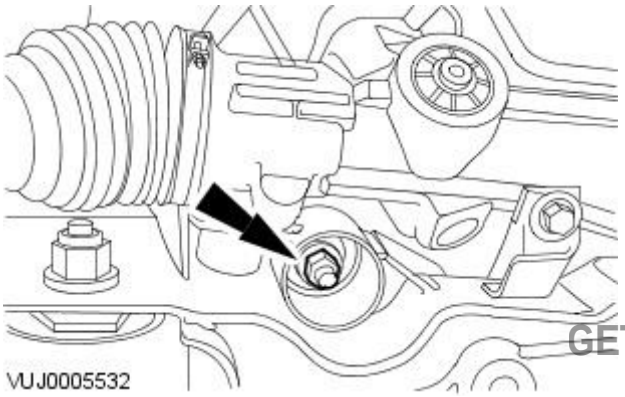


GETtheMANUALS.org

**10.** Remove the radiator splash shield.
For additional information, refer to: Radiator Splash Shield (501-02 Front End Body Panels, Removal and Installation).

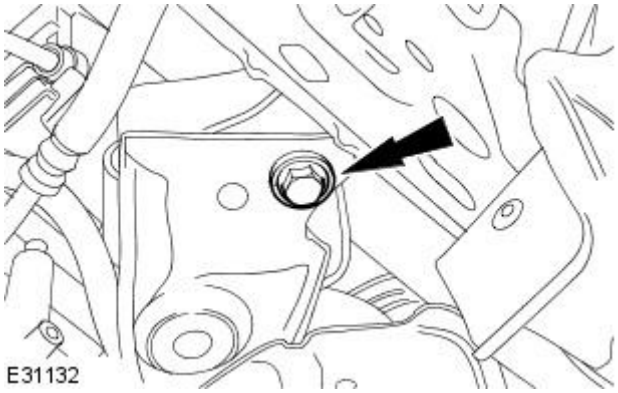


**11.** WARNING: Do not remove the front subframe front retaining bolts. Failure to follow this instruction may result in personal injury.

CAUTION: Do not remove the front subframe front retaining bolts. Failure to follow this instruction may result in damage to the vehicle.

- NOTE: Left-hand shown, right-hand similar.

Loosen the front subframe front retaining bolts to enable the engine mount left-hand to be removed.

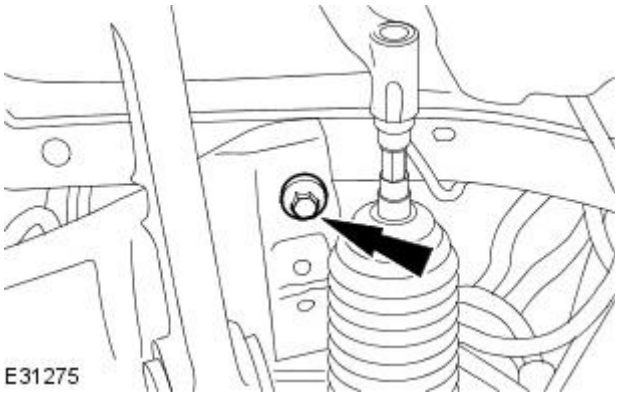


**12.** WARNING: Do not remove the front subframe rear retaining bolts. Failure to follow this instruction may result in personal injury.

CAUTION: Do not remove the front subframe rear retaining bolts. Failure to follow this instruction may result in damage to the vehicle.

- NOTE: Left-hand shown, right-hand similar.

Loosen the front subframe rear retaining bolts to enable the engine mount left-hand to be removed.

**13.** Detach the air cleaner lower outlet tube.

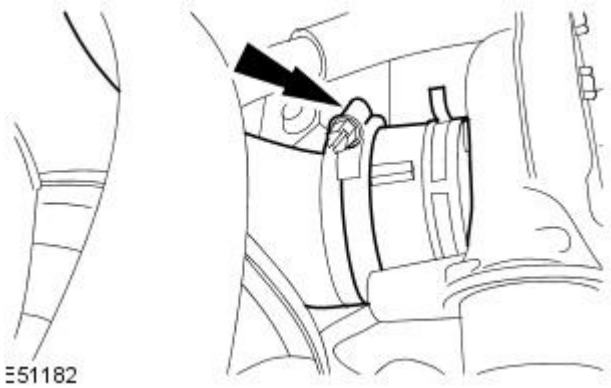


**14.** Lower the vehicle.

**15.** Remove the left-hand engine compartment cover.

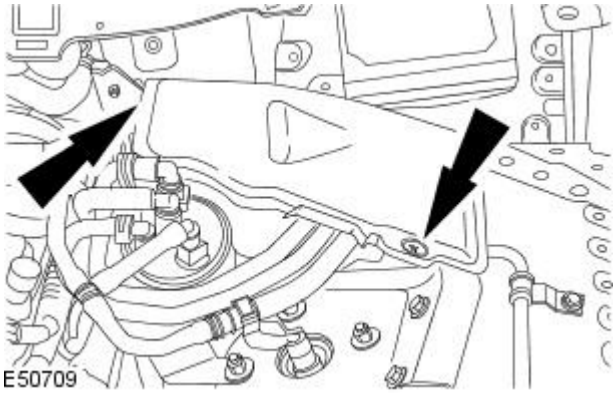


GETtheMANUALS.org

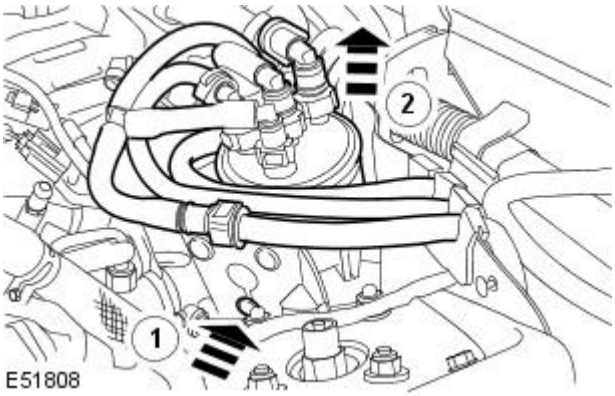


**16.** Detach the fuel filter from the mounting bracket.

1. Release the retaining tangs.
2. Detach the fuel filter from the mounting bracket.

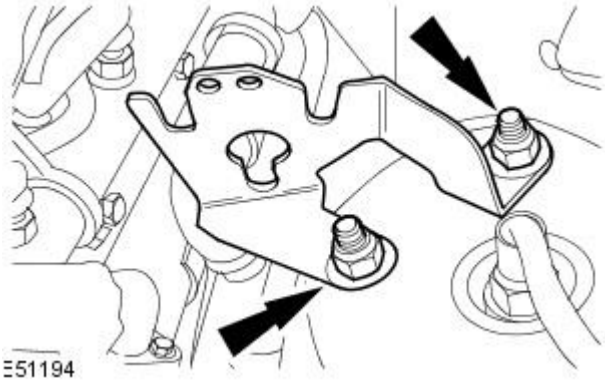


**17.** Remove the fuel filter mounting bracket.

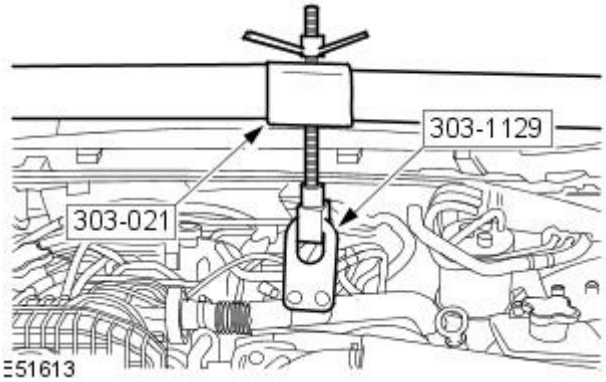


**18.** Raise the engine.

- Rotate the special tool adjustment bolt a suitable amount of turns to raise the engine to aid the removal of the engine mount left-hand.

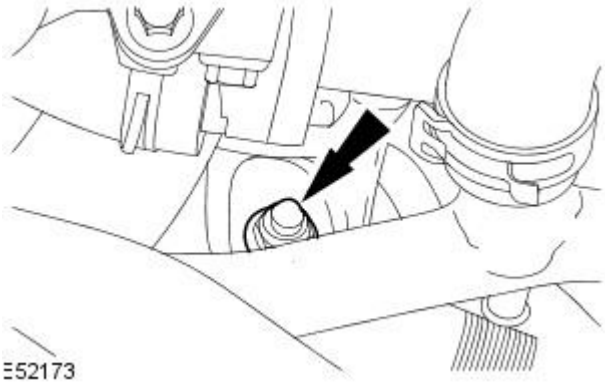


**19.** Detach the engine mount left-hand.

**20.** Raise the vehicle.

**21.** Remove the left-hand engine mount.

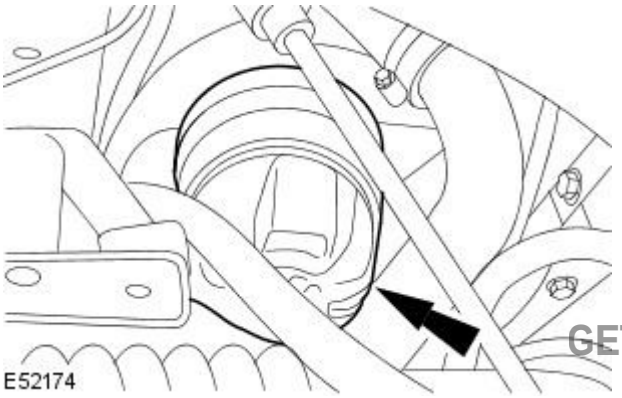


GETtheMANUALS.org

## Installation

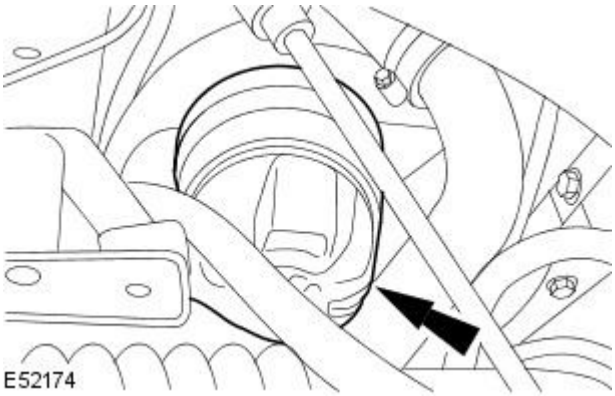


**1.** Install the left-hand engine mount.

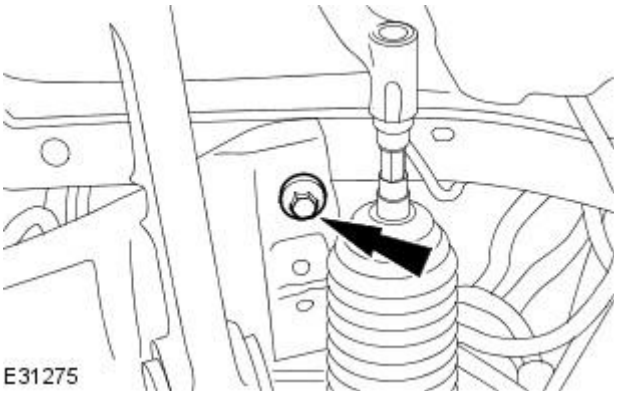


**2.** WARNING: Do not remove the front subframe rear retaining bolts. Failure to follow this instruction may result in personal injury.

• CAUTIONS:

Do not remove the front subframe rear retaining bolts. Failure to follow this instruction may result in damage to the vehicle.

Make sure the engine mount locates into the correct position when the front subframe is repositioned. Failure to follow this instruction may result in damage to the vehicle.

• NOTE: Left-hand shown, right-hand similar.

Loosely install the front subframe rear retaining bolt.

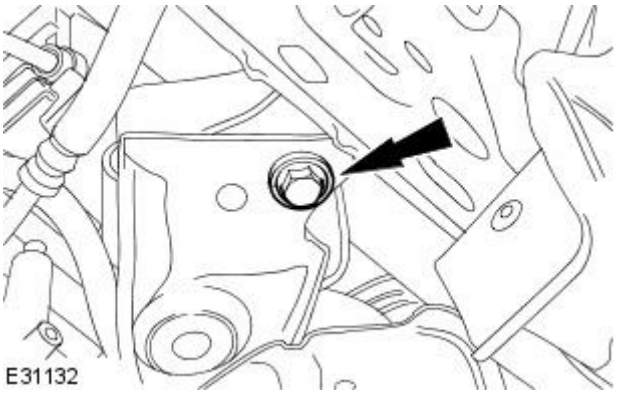


**3.** NOTE: Left-hand shown, right-hand similar.

Remove the front subframe front retaining bolt.

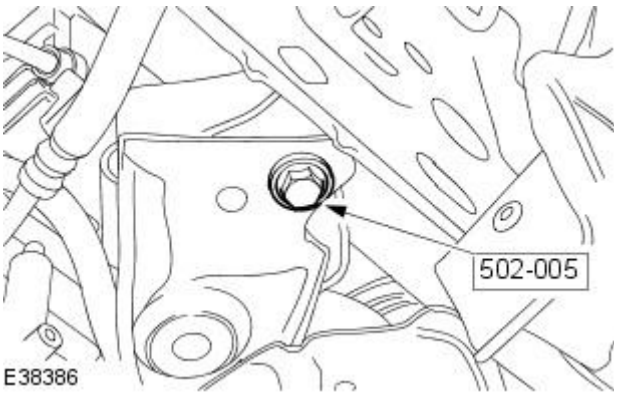


**4.** NOTE: Left-hand shown, right-hand similar.

Install the special tool.

GETtheMANUALS.org

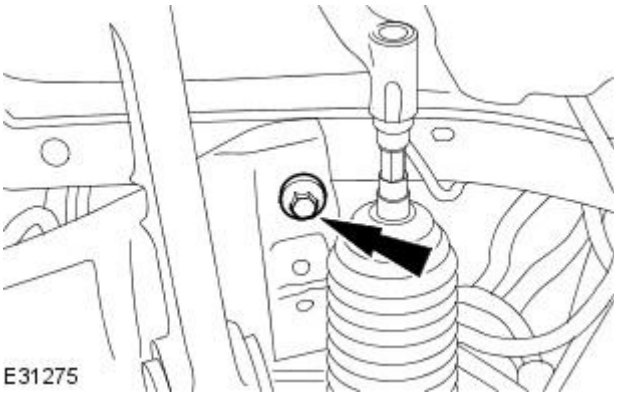


**5.** NOTE: Left-hand shown, right-hand similar.

Install the front subframe rear retaining bolts.

- Tighten to 80 Nm + 300°.

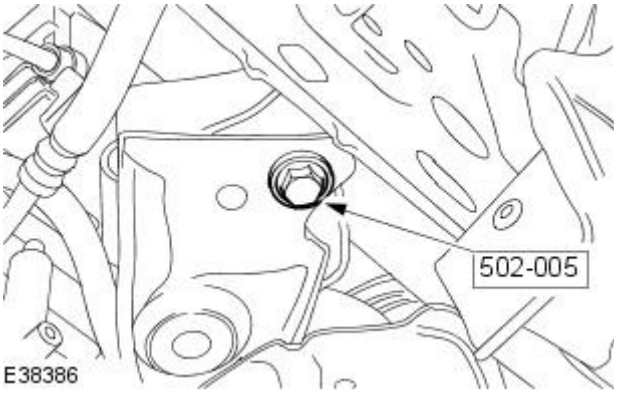


**6.** Remove the special tool.

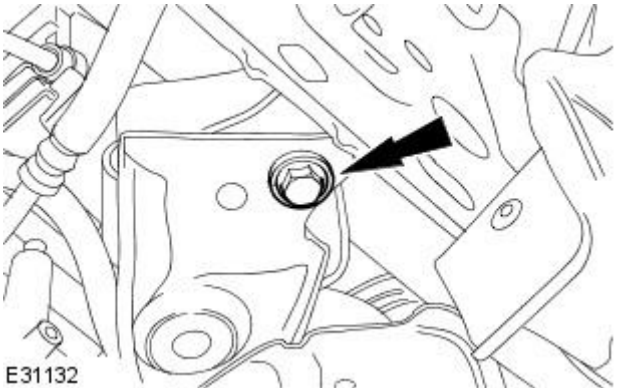


**7.** Install the front subframe front retaining bolt.

- Tighten to 180 Nm + 300°.

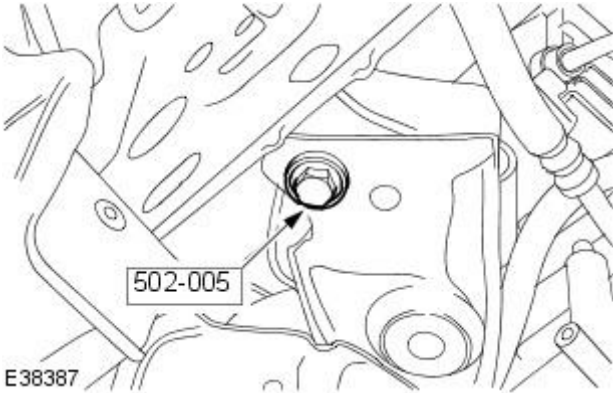


**8.** Remove the special tool.

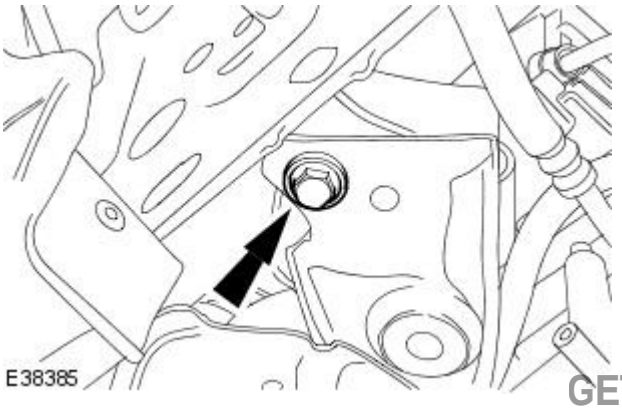


**9.** Install the front subframe front retaining bolt.

- Tighten to 180 Nm + 300°.

GETtheMANUALS.org

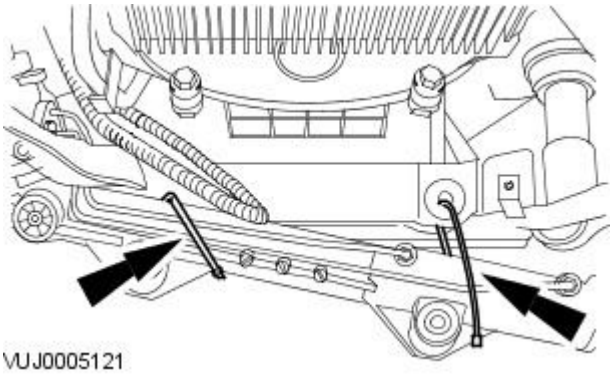


**10.** Detach the steering gear.

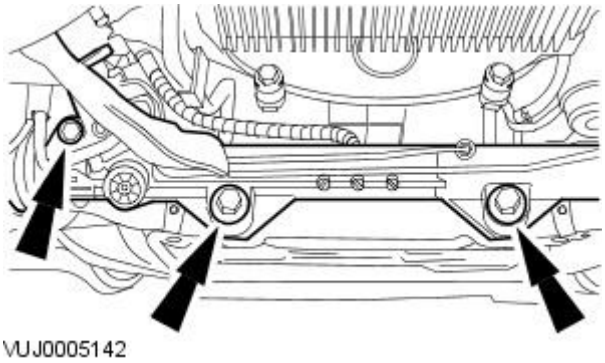


**11.** Attach the steering gear.

- Tighten to 100 Nm.

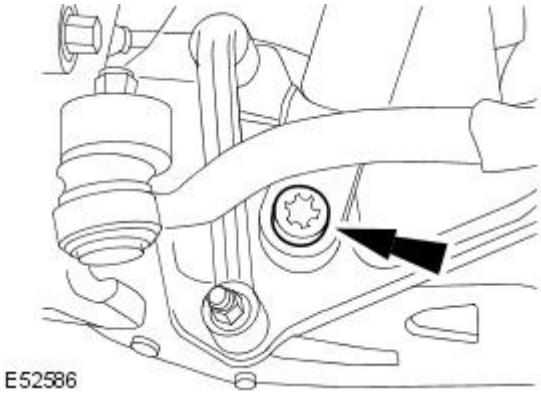


**12.** Attach the shock absorber.

- Tighten to 175 Nm.

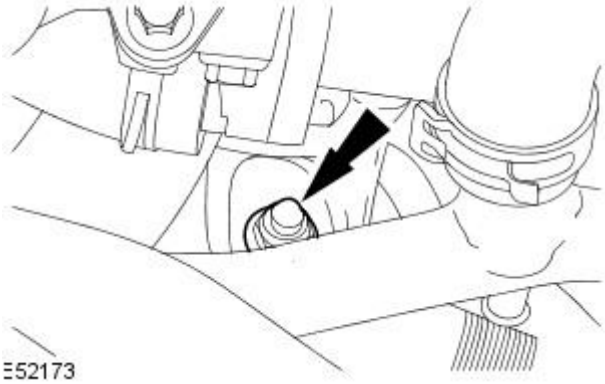


**13.** Lower the vehicle.

**14.** Attach the engine mount left-hand.

- Tighten to 48 Nm.

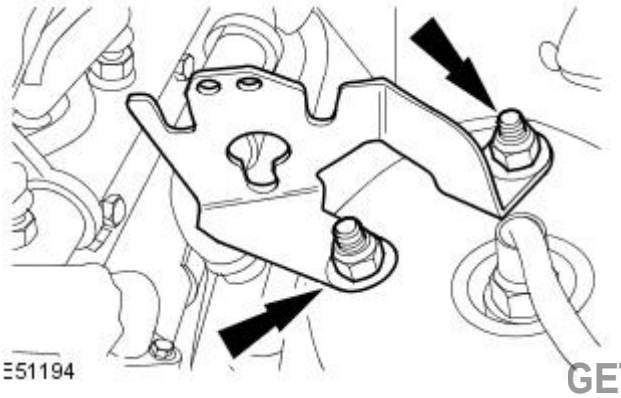


**15.** Install the fuel filter mounting bracket.

- Tighten to 25 Nm.

GETtheMANUALS.org

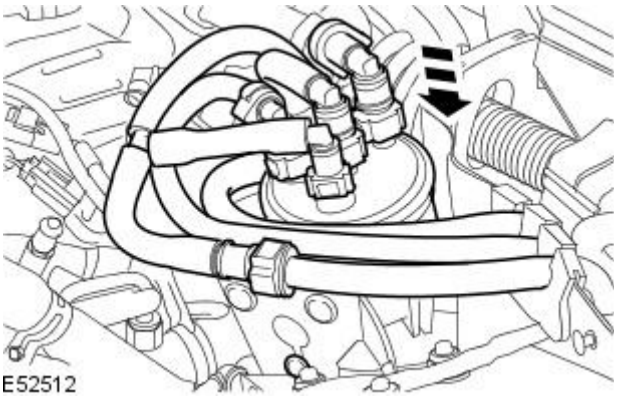


**16.** Attach the fuel filter to the mounting bracket.

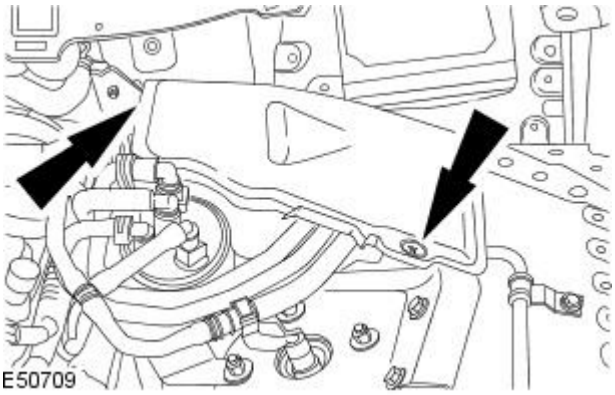


**17.** Attach the left-hand engine compartment cover.

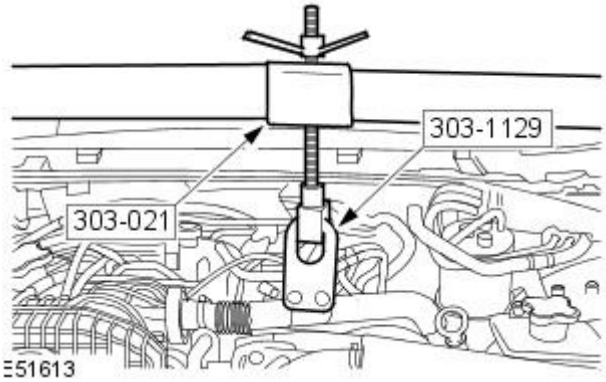


**18.** Remove the special tool.

- Loosen the special tool adjustment bolt.

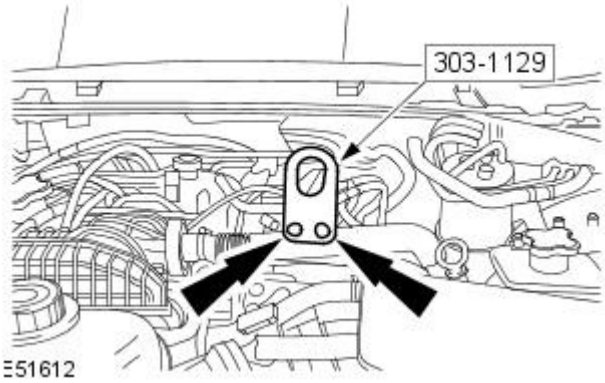


**19.** Remove the special tool.

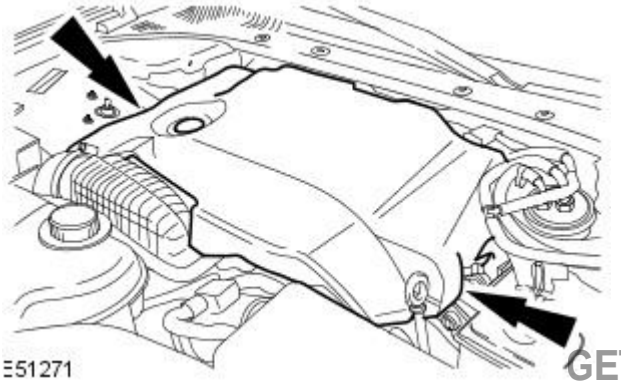


**20.** Install the engine cover.

GETtheMANUALS.org

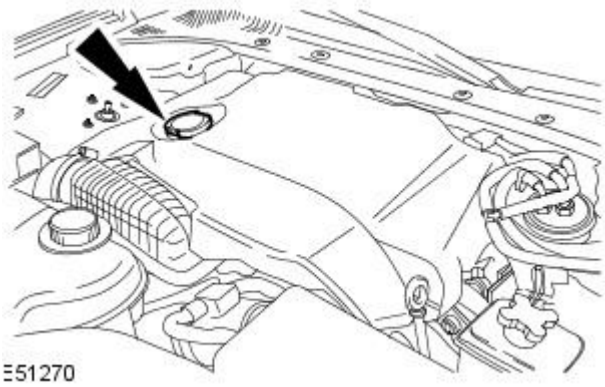


**21.** Install the filler cap.

**22.** Raise the vehicle.

**23.** Attach the air cleaner lower outlet tube.

**24.** Tighten to 63 Nm.

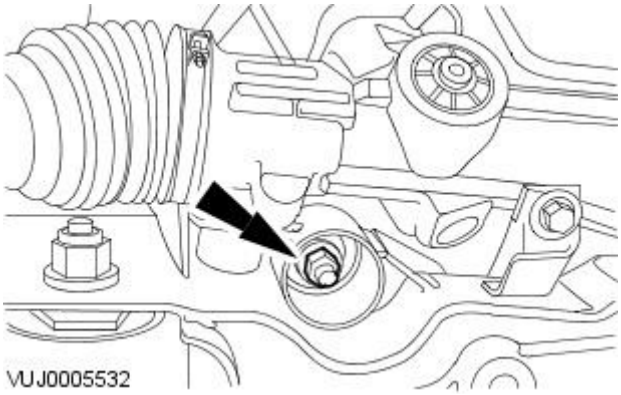


**25.** Install the air deflector.
For additional information, refer to: Air Deflector (501-02 Front End Body Panels, Removal and Installation).

GETtheMANUALS.org

# Engine - 2.7L V6 - TdV6 - Engine Mount RH

In-vehicle Repair

| Special Tool(s) | |
|---|---|
| 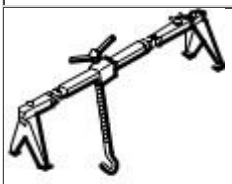 303-021 | Engine support beam<br><br>303-021 |
| E52720 | Engine lifting brackets<br><br>303-1129 |

## Removal

1. Remove the intake air shutoff throttle.
   For additional information, refer to: Intake Air Shutoff Throttle (303-04C Fuel Charging and Controls - 2.7L V6 - TdV6, Removal and Installation).
2. Remove the generator.
   For additional information, refer to: Generator - 2.7L V6 - TdV6 (414-02 Generator and Regulator, Removal and Installation).
3. Remove the starter motor.
   For additional information, refer to: Starter Motor - 2.7L V6 - TdV6 (303-06 Starting System, Removal and Installation).
4. Detach the right-hand air cleaner outlet tube from the timing cover.

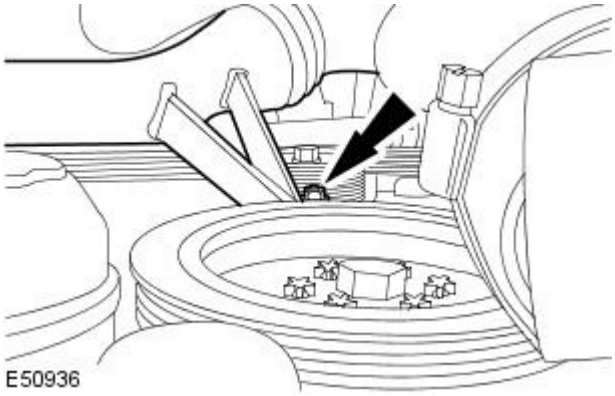


5. Remove the right-hand catalytic converter.
   For additional information, refer to: Catalytic Converter - 2.7L V6 - TdV6 (309-00 Exhaust System, Removal and Installation).
6. Detach the turbocharger outlet tube connecting hose.

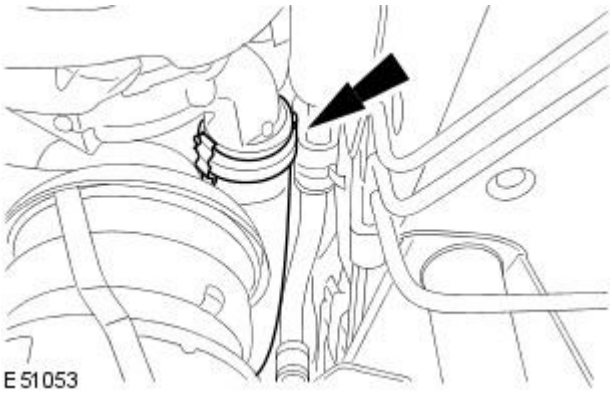


GETtheMANUALS.org

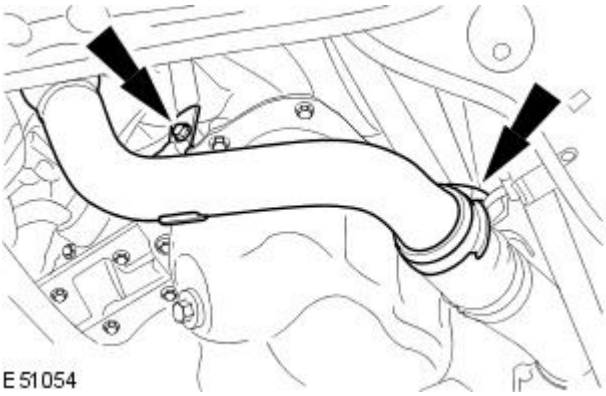


**7.** Remove the turbocharger outlet tube.

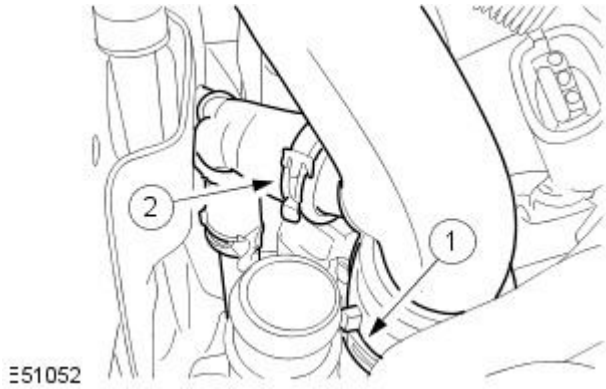


**8.** Remove the air cleaner outlet tube.

1. Detach the air cleaner outlet tube to turbocharger retaining clip.
2. Detach the air cleaner outlet tube to breather tube retaining clip.

- Remove the air cleaner outlet tube.

**9.** Lower the vehicle.

**10.** Fit the front engine lifting brackets

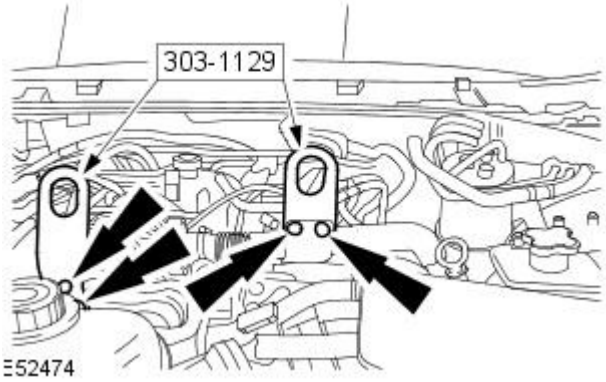


**11.** Fit the engine support beam.

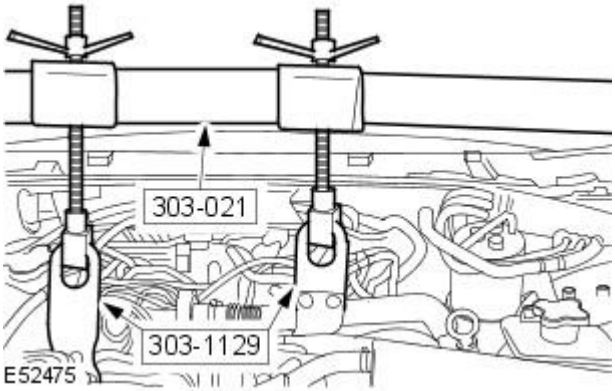


**12.** Detach the right-hand engine mounting.

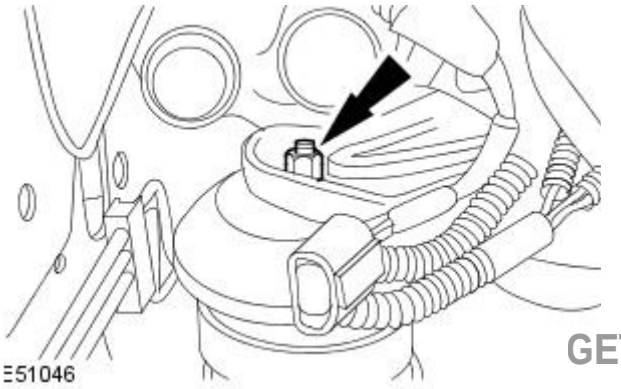


GETtheMANUALS.org

13. Raise the engine.
14. Raise the vehicle.
15. Remove the right-hand engine mounting retaining bolt.

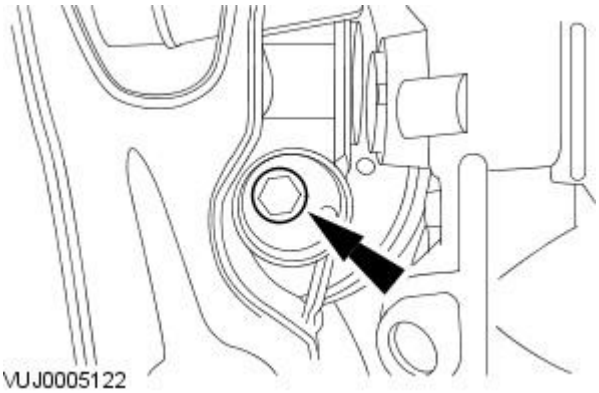


16. Remove the right-hand engine mounting bracket.

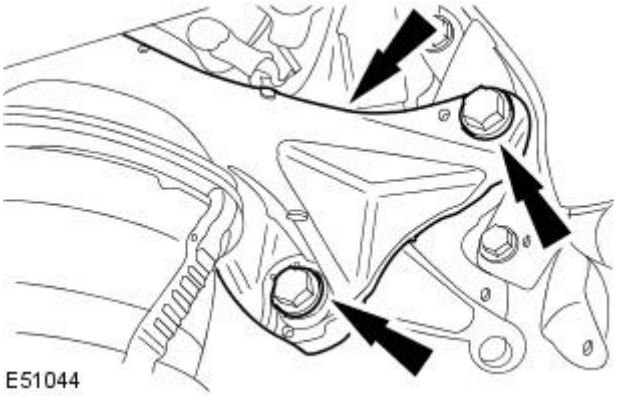


17. Remove the right-hand engine mounting.

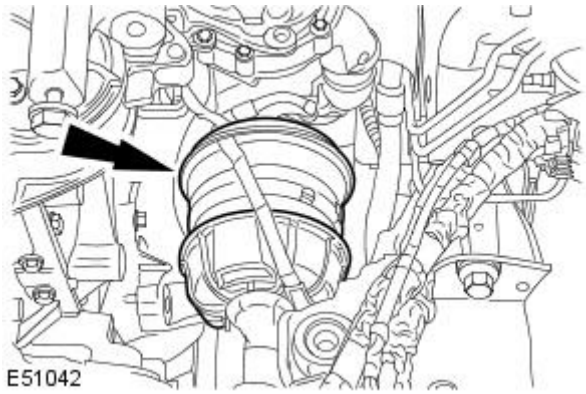


## Installation

1. Install the right-hand engine mounting.

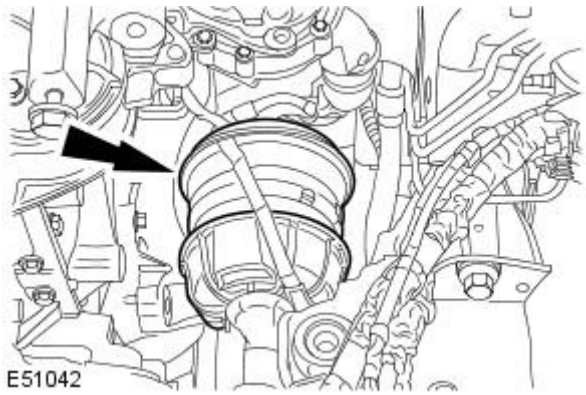


GETtheMANUALS.org

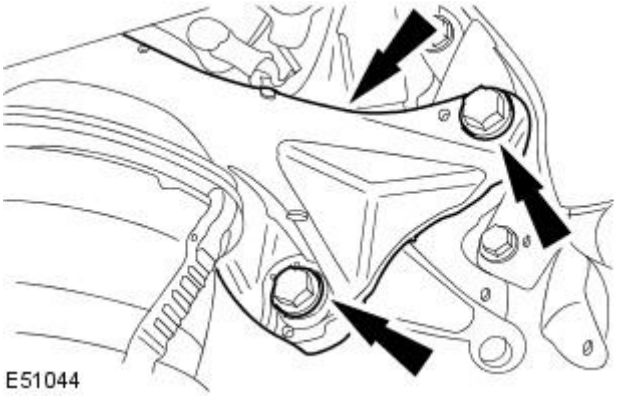


**2.** Install the right-hand engine mounting bracket.

- Tighten to 90 Nm.

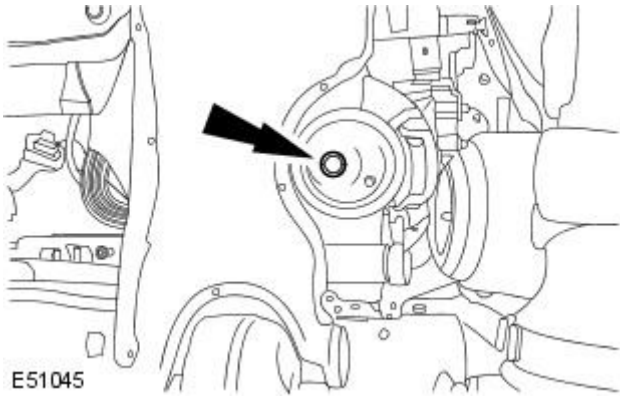


**3.** Tighten to 63 Nm.

**4.** Lower the vehicle.

**5.** Lower the engine.

**6.** Tighten to 48 Nm.

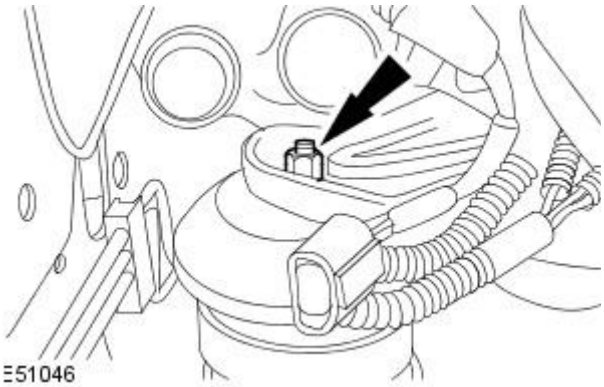


**7.** Remove the engine support beam.

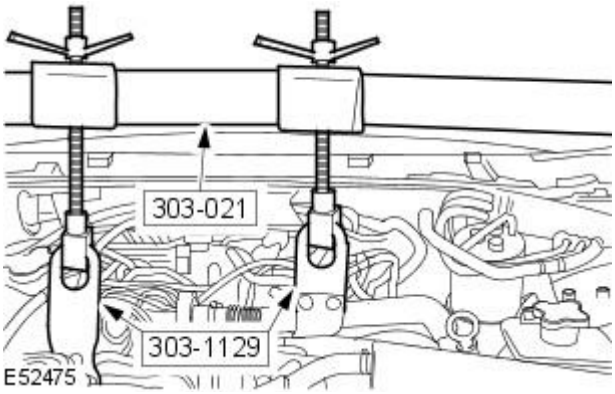


GETtheMANUALS.org

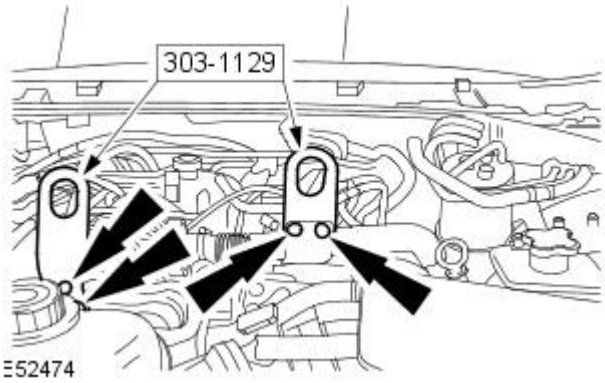


**8.** Remove the front engine lifting eyes.

**9.** Raise the vehicle.

**10.** Install the air cleaner outlet tube.

1. Attach the air cleaner outlet tube to turbocharger retaining clip.
2. Attach the air cleaner outlet tube to breather tube retaining clip.

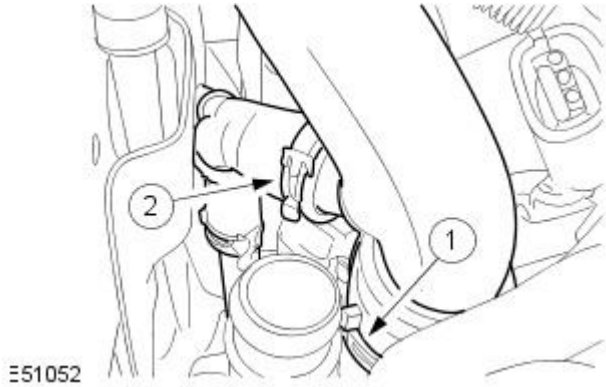


**11.** Install the right-hand turbocharger outlet tube.

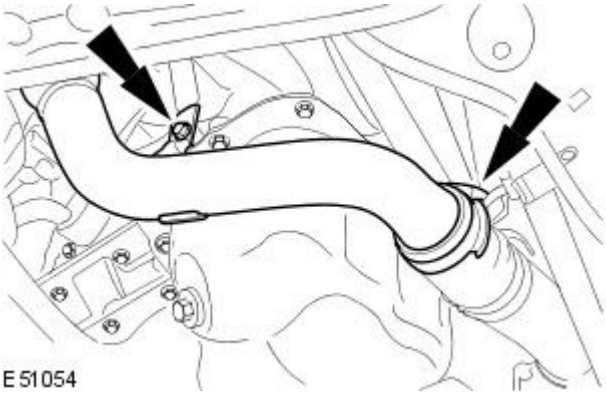


**12.** Attach the right-hand turbocharger outlet tube connecting hose.

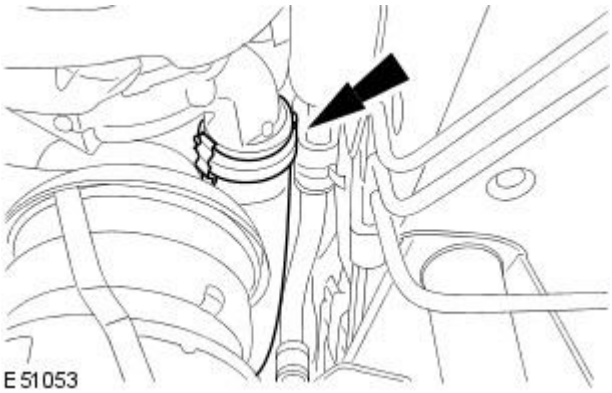


**13.** Install the right hand catalytic converter.
For additional information, refer to: Catalytic Converter - 2.7L V6 - TdV6 (309-00 Exhaust System, Removal and Installation).

GETtheMANUALS.org

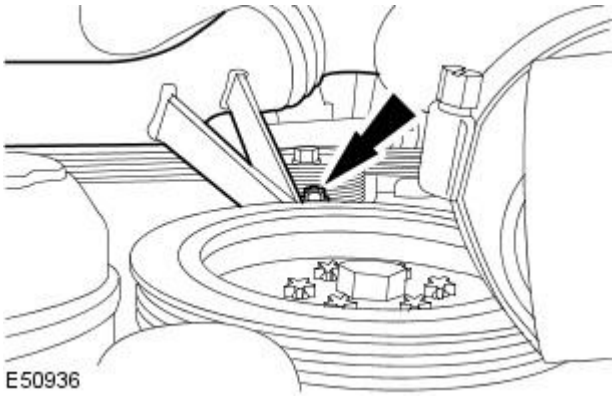


**14.** Attach the right-hand air cleaner outlet tube to the timing cover.

**15.** Install the starter motor.
For additional information, refer to: Starter Motor - 2.7L V6 - TdV6 (303-06 Starting System, Removal and Installation).

**16.** Install the generator.
For additional information, refer to: Generator - 2.7L V6 - TdV6 (414-02 Generator and Regulator, Removal and Installation).

**17.** Install the intake air shutoff throttle.
For additional information, refer to: Intake Air Shutoff Throttle (303-04C Fuel Charging and Controls - 2.7L V6 - TdV6, Removal and Installation).

GETtheMANUALS.org

# Engine - 2.7L V6 - TdV6 - Exhaust Manifold LH

In-vehicle Repair

## Removal

1. Remove the left-hand EGR valve.
   For additional information, refer to: Exhaust Gas Recirculation (EGR) Valve LH (303-08B Engine Emission Control - 2.7L V6 - TdV6, Removal and Installation).
2. Remove the Turbocharger LH.
   For additional information, refer to: Turbocharger LH (303-04D Fuel Charging and Controls - Turbocharger - 2.7L V6 - TdV6, Removal and Installation).
3. Remove the exhaust manifold heatshield.

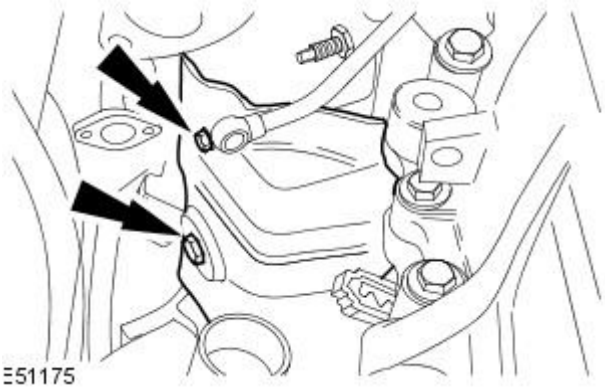


4. NOTE: New exhaust manifold retaining studs must be fitted if the old studs are removed.

   Remove the exhaust manifold.

   - Remove and discard the retaining nuts.

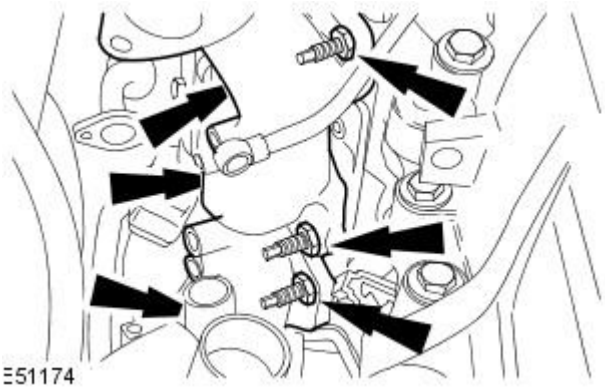


5. Remove and discard the exhaust manifold gasket.

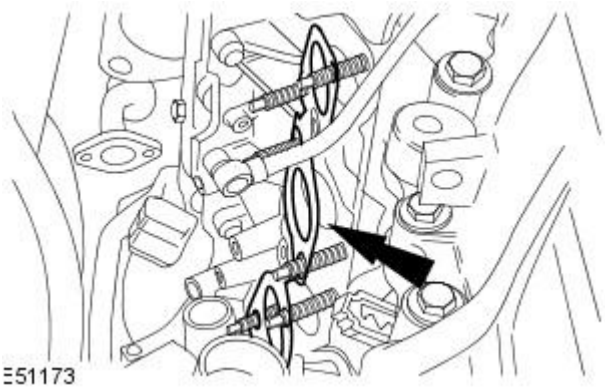


## Installation

1. Install a new exhaust manifold gasket.

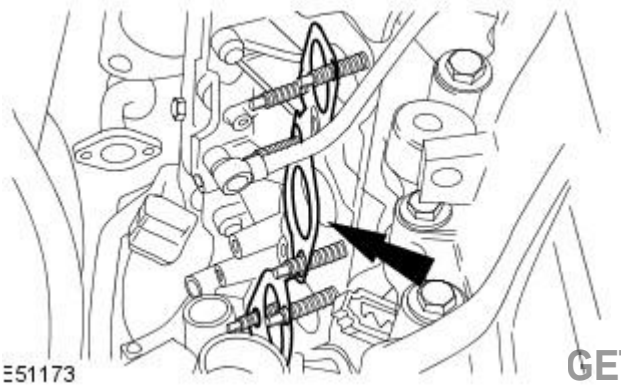


GETtheMANUALS.org

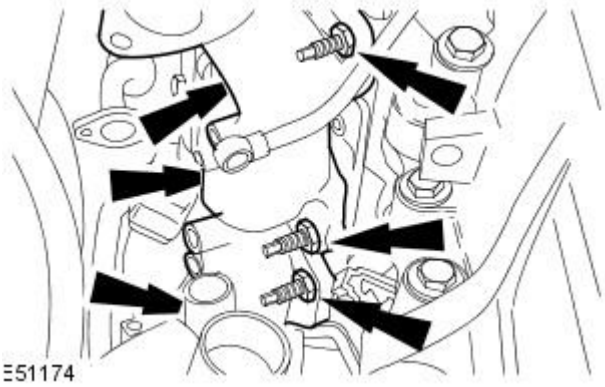


**2.** CAUTION: Ensure the exhaust manifold and gasket are correctly aligned to the cylinder head and studs.

Install the exhaust manifold.

- Install new exhaust manifold retaining nuts.
- Tighten to 23 Nm.

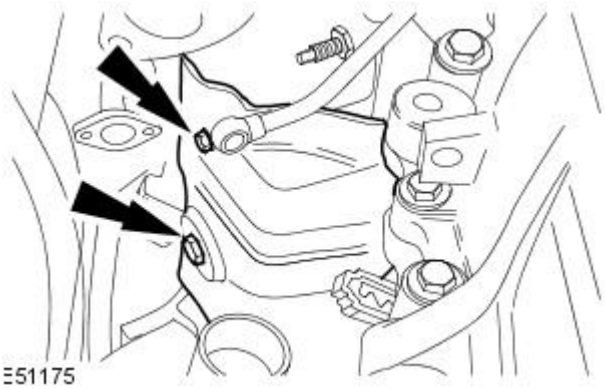


**3.** Install the exhaust manifold heat shield.

- Tighten to 10 Nm.

**4.** Install the Turbocharger LH.
For additional information, refer to: Turbocharger LH (303-04D Fuel Charging and Controls - Turbocharger - 2.7L V6 - TdV6, Removal and Installation).

**5.** Install the EGR valve.
For additional information, refer to: Exhaust Gas Recirculation (EGR) Valve LH (303-08B Engine Emission Control - 2.7L V6 - TdV6, Removal and Installation).

GETtheMANUALS.org

# Engine - 2.7L V6 - TdV6 - Exhaust Manifold RH

In-vehicle Repair

## Removal

1. Remove the exhaust gas recirculation (EGR) valve RH.
   For additional information, refer to: Exhaust Gas Recirculation (EGR) Valve RH (303-08B Engine Emission Control - 2.7L V6 - TdV6, Removal and Installation).
2. Remove the turbocharger RH.
   For additional information, refer to: Turbocharger RH (303-04D Fuel Charging and Controls - Turbocharger - 2.7L V6 - TdV6, Removal and Installation).
3. Remove the exhaust manifold front heat shield.

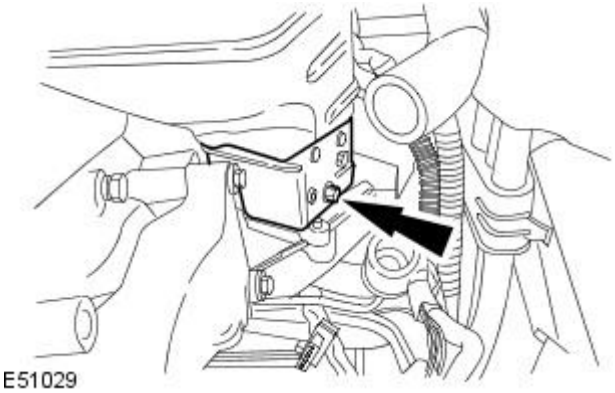


4. Remove the exhaust manifold rear heat shield.

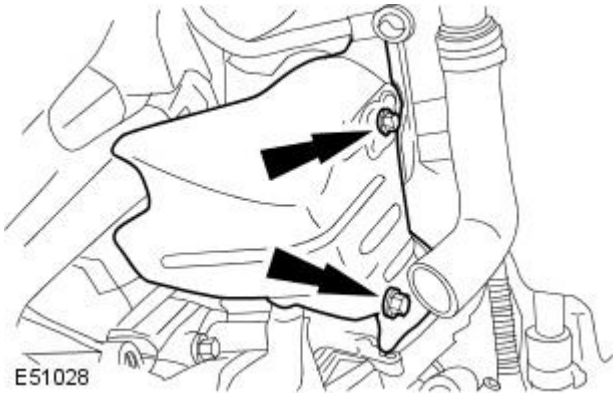


5. NOTE: New exhaust manifold retaining studs must be fitted if the old studs are removed.

   Remove the exhaust manifold.

   - Remove and discard the retaining nuts.

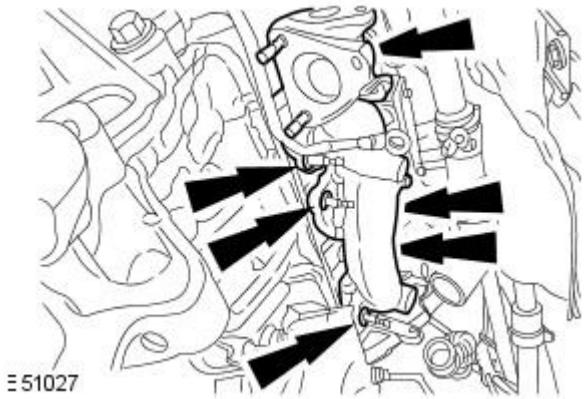


6. Remove and discard the exhaust manifold gasket.

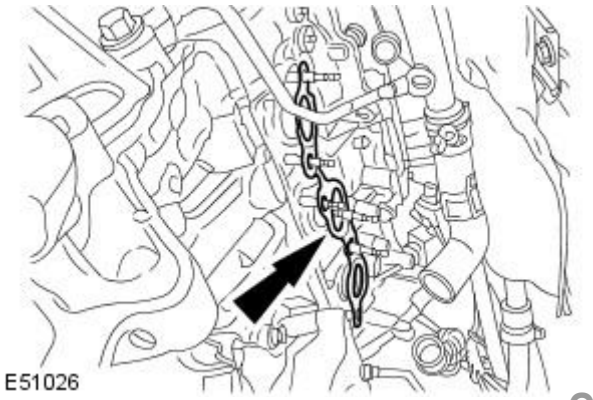


GETtheMANUALS.org

## Installation

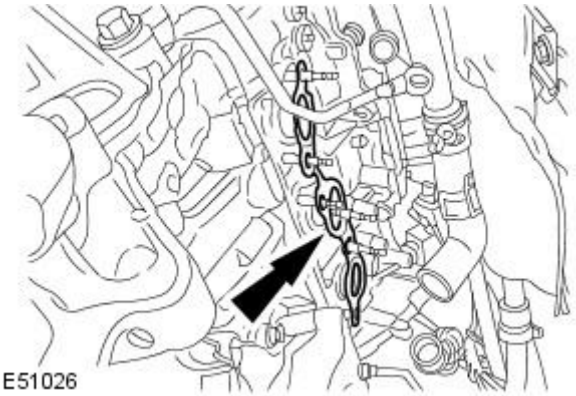


**1.** Install a new exhaust manifold gasket.

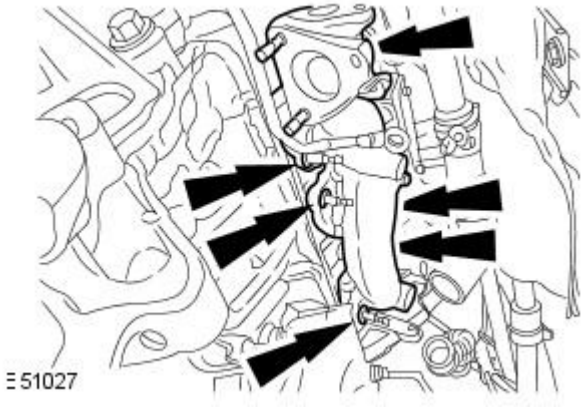


**2.** CAUTION: Ensure the exhaust manifold and gasket are correctly aligned to the cylinder head and studs.

Install the exhaust manifold.

- Install new exhaust manifold retaining nuts.
- Tighten to 23 Nm.

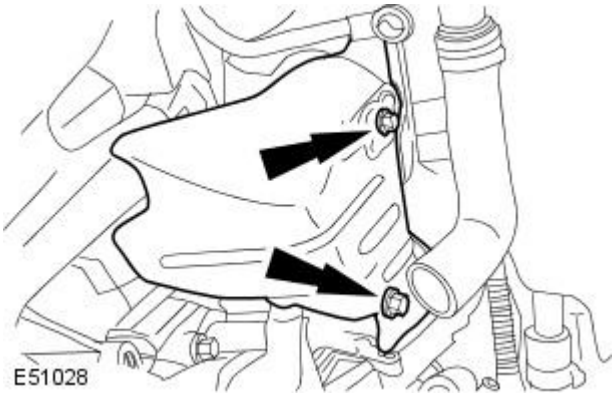


**3.** Install the exhaust manifold rear heat shield.

- Tighten to 10 Nm.

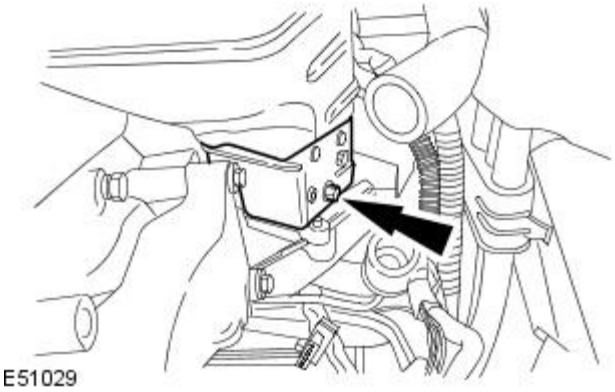


**4.** Install the exhaust manifold front heat shield.

- Tighten to 10 Nm.

**5.** Install the turbocharger RH.
For additional information, refer to: Turbocharger RH (303-04D Fuel Charging and Controls - Turbocharger - 2.7L V6 - TdV6, Removal and Installation).

**6.** Install the exhaust gas recirculation (EGR) valve RH.
For additional information, refer to: Exhaust Gas Recirculation (EGR) Valve RH (303-08B Engine Emission Control - 2.7L V6 - TdV6, Removal and Installation).

GETtheMANUALS.org

# Engine - 2.7L V6 - TdV6 - Flexplate

In-vehicle Repair

## Removal

1. Remove the transmission.
   For additional information, refer to: Transmission - 2.7L V6 - TdV6 (307-01 Automatic Transmission/Transaxle, Installation).
2. NOTE: Prevent the flexplate from rotating.

   Remove the flexplate.

## Installation

1. NOTE: Make sure the crankshaft and flexplate mating faces are clean before installation.

   • NOTE: The flexplate will only locate in one position.

   • NOTE: Install, but do not tighten, the flexplate retaining bolts.

   Install the flexplate.

   - Prevent the flexplate from rotating.

2. CAUTION: Tighten the flexplate securing bolts in three stages.

   Tighten the flexplate securing bolts.

   - Stage 1: Tighten to 50 Nm.
   - Stage 2: Tighten to 45 degrees.
   - Stage 3: Tighten to 45 degrees.

3. Install the transmission.
   For additional information, refer to: Transmission - 2.7L V6 - TdV6 (307-01 Automatic Transmission/Transaxle, Installation).

GETtheMANUALS.org

# Engine - 2.7L V6 - TdV6 - Flywheel

In-vehicle Repair

## Removal

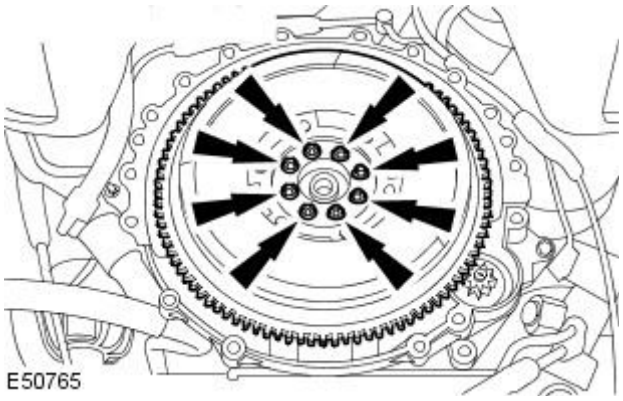


1. Remove the transmission.
   For additional information, refer to: Transmission (308-03B Manual Transmission/Transaxle - Vehicles With: S6-53 6-Speed Manual Transmission, Removal).
2. NOTE: Prevent the flywheel from rotating.

   Remove the flywheel.

## Installation

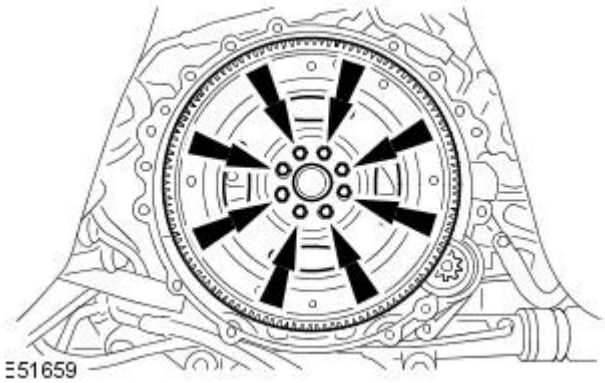


1. NOTE: Make sure the crankshaft and flywheel mating faces are clean before installation.

   • NOTE: The flywheel will only locate in one position.

   • NOTE: Install, but do not tighten, the flywheel retaining bolts.

   Install the flywheel.

   - Prevent the flywheel from rotating.

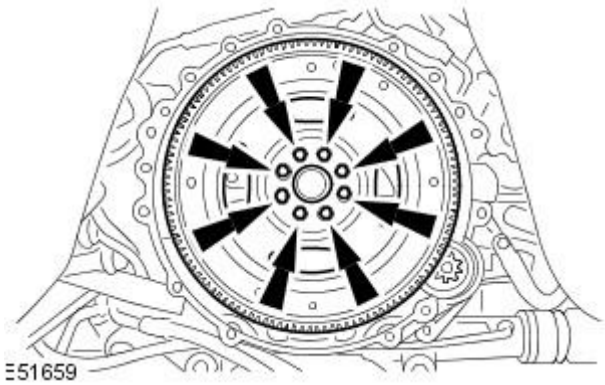


2. CAUTION: Tighten the flywheel securing bolts in three stages.

   Tighten the flywheel securing bolts.

   - Stage 1: Tighten to 50 Nm.
   - Stage 2: Tighten to 45 degrees.
   - Stage 3: Tighten to 45 degrees.

3. Install the transmission.
   For additional information, refer to: Transmission (308-03B Manual Transmission/Transaxle - Vehicles With: S6-53 6-Speed Manual Transmission, Installation).

GETtheMANUALS.org

# Engine - 2.7L V6 - TdV6 - Oil Filter Element

In-vehicle Repair

| Special Tool(s) | |
|---|---|
| E52721 | Remover - oil filter<br><br>303-1128 |

## Removal

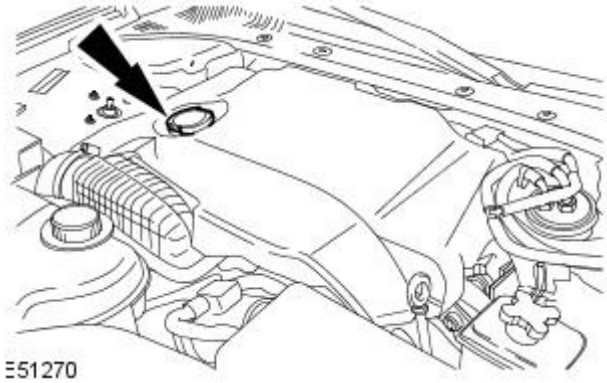
E51270

**1.** Remove the oil filler cap.

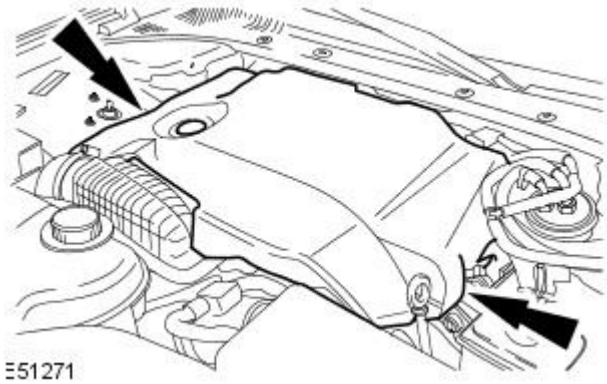
E51271

**2.** Remove the engine cover.

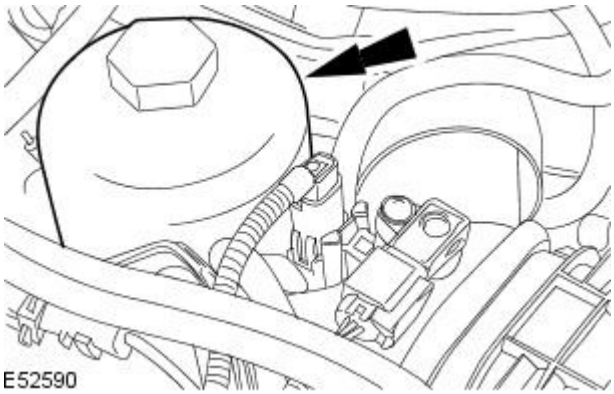
E52590

**3.** NOTE: Remove and discard the O-ring seal.

Remove the oil filter element housing.

- Rotate the oil filter element housing five complete turns counter-clockwise.
- Allow the engine oil to drain from the oil filter element housing for two minutes.
- Remove the oil filter element housing.

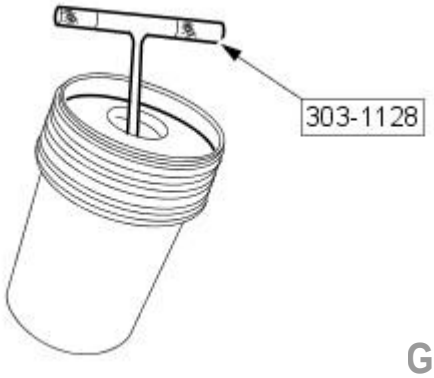

E50865

**4.** Using the special tool, remove the oil filter element.

GETtheMANUALS.org

## Installation

E56283

1. Install the oil filter element.

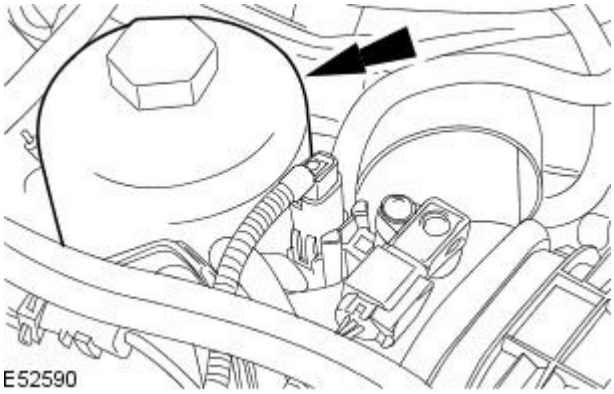
E52590

2. NOTE: Install a new O-ring seal.

   Install the oil filter element housing.

   - Tighten to 25 Nm.

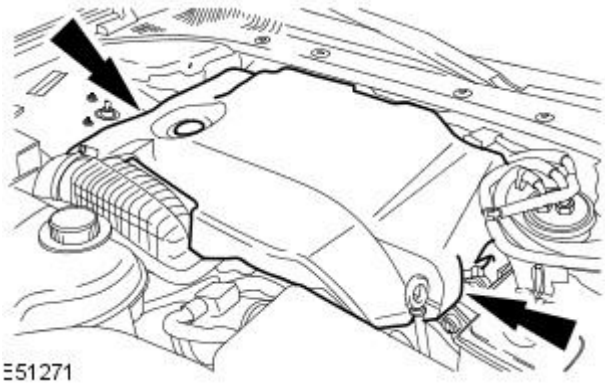
E51271

3. Install the engine cover.

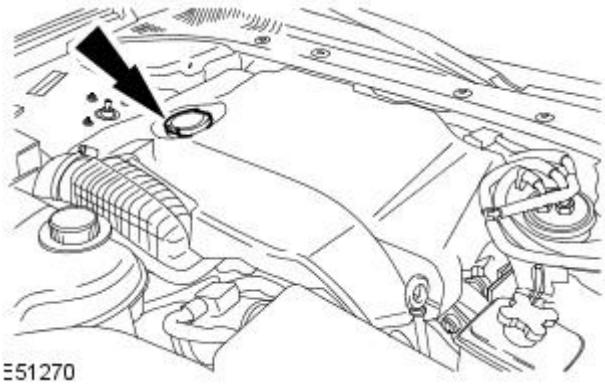
E51270

4. Install the oil filler cap.

5. Check and top up the engine oil.
6. Run the engine.
7. Check and if necessary top up the engine oil.

GETtheMANUALS.org

# Engine - 2.7L V6 - TdV6 - Oil Pan

In-vehicle Repair

| Special Tool(s) | |
|---|---|
| E52720 | Engine Lifting Bracket<br><br>303-1129 |
| 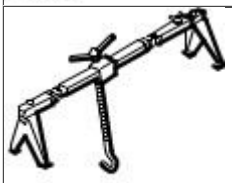 303-021 | Engine Support Bracket<br><br>303-021 |

## Removal

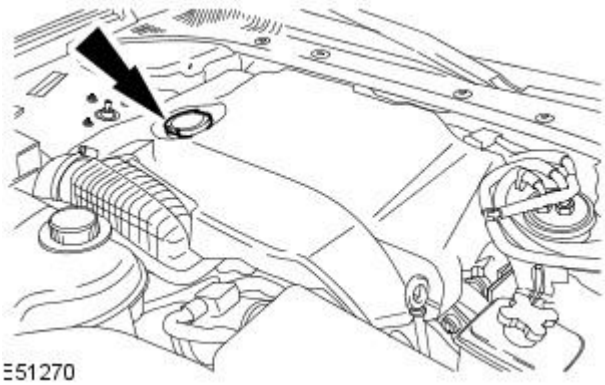


**1.** Remove the oil filler cap.

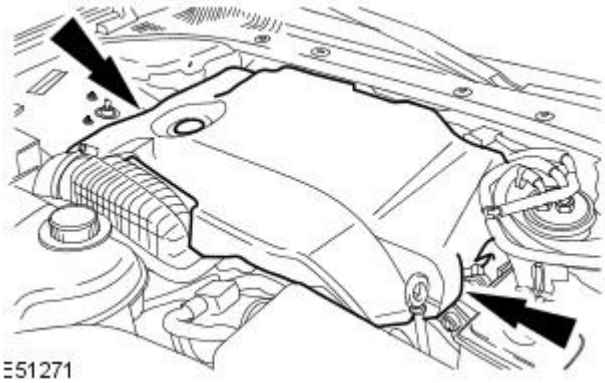


**2.** Remove the engine cover.

**3.** Install the engine oil filler cap to prevent foreign material entering the valve cover.

**4.** Install the engine lifting bracket.

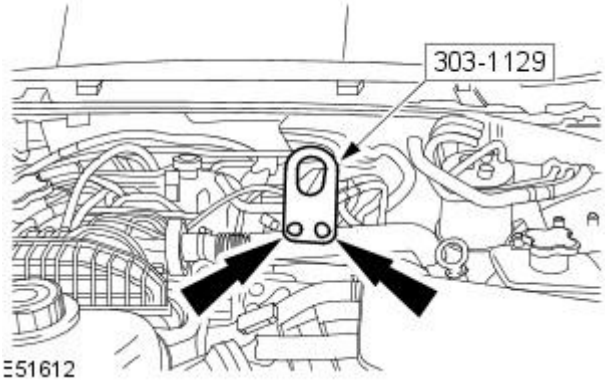


GETtheMANUALS.org

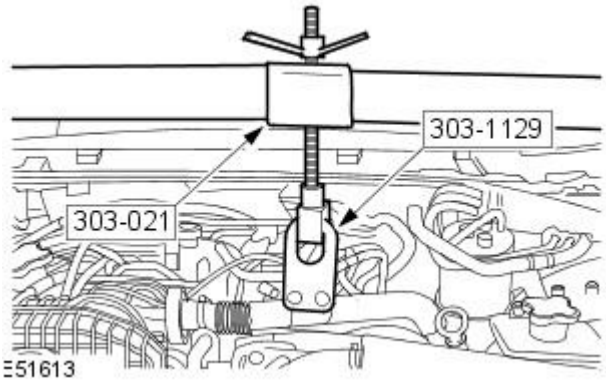


**5.** Install the engine support bracket.

**6.** Remove the air deflector.
For additional information, refer to: Air Deflector (501-02 Front End Body Panels, Removal and Installation).

**7.** Detach the lower steering column.

- Remove the steering gear shaft pinch bolt.

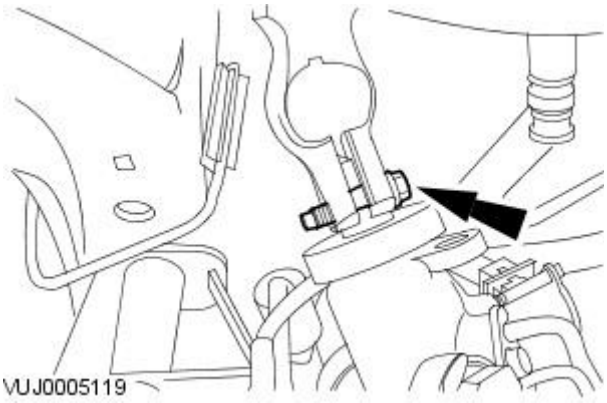


**8.** Detach the steering gear.

- Remove the steering gear retaining bolts.

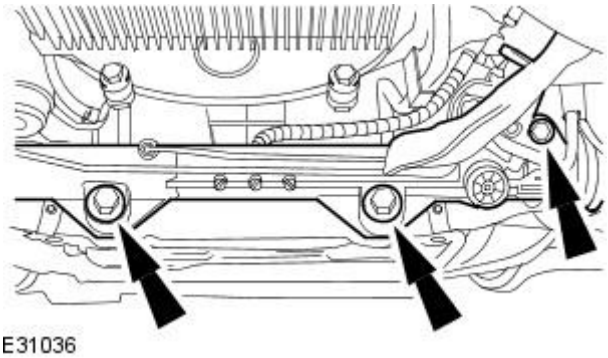


**9.** Using a suitable piece of string secure the steering gear.

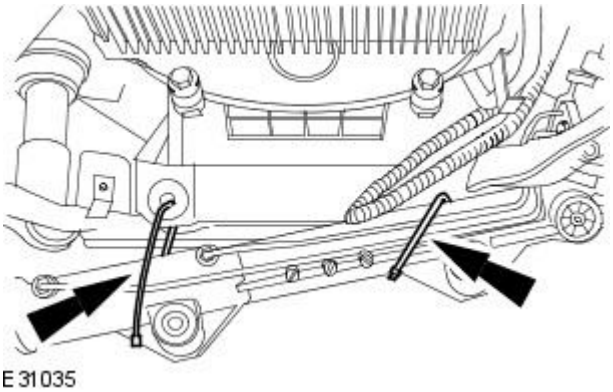


GETtheMANUALS.org

**10.** Remove the right-hand turbo charger outlet tube retaining bolt.

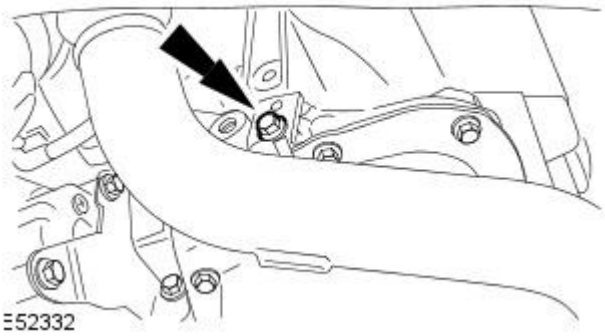


**11.** Remove the right-hand turbo charger outlet tube.

**12.** Remove the left-hand engine mount retaining nut.

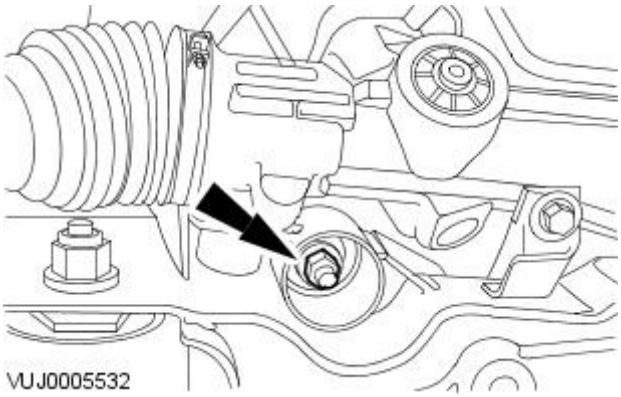


**13.** Lower the vehicle.

**14.** Using special tool raise the left-hand side of the engine.

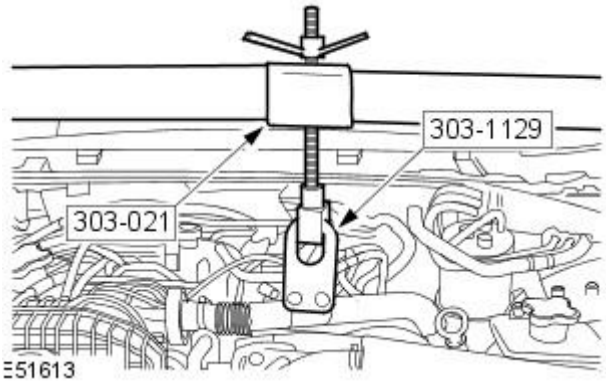


**15.** Raise the vehicle.

**16.** Drain the engine oil.

- Place suitable container under the vehicle.
- Remove the drain plug and drain the engine oil.

GETtheMANUALS.org

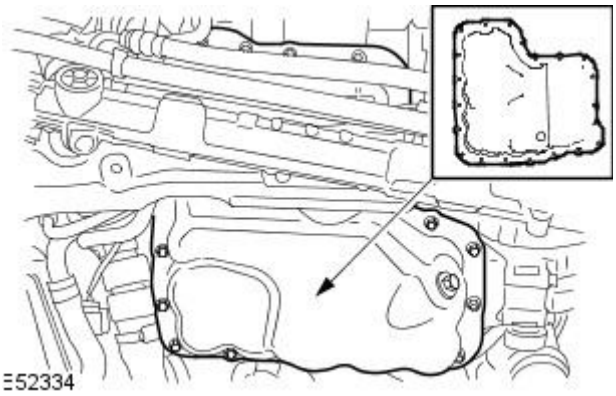


**17.** Remove the oil pan retaining bolts.

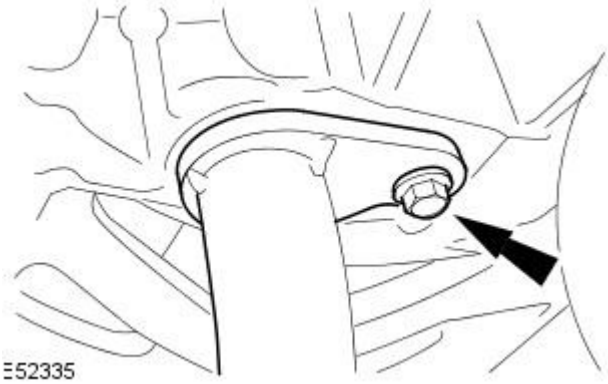


**18.** Remove the oil strainer retaining bolt.

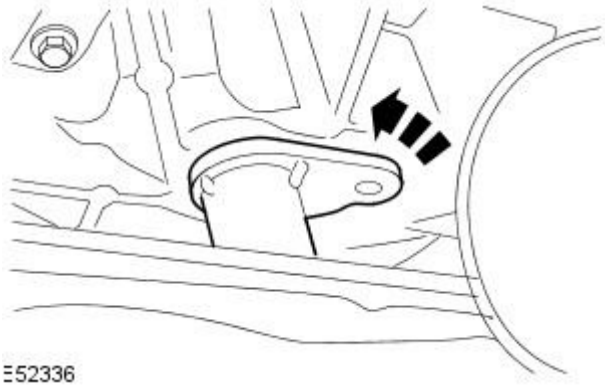


**19.** Reposition the oil strainer.

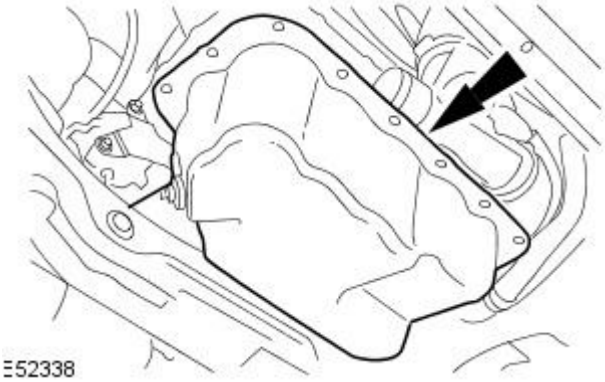


**20.** Remove the oil pan.

- Remove and discard the gasket.

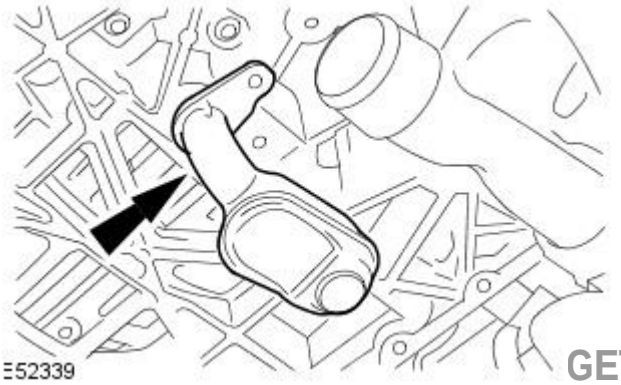


**21.** Remove the oil strainer.

- Remove and discard the O-ring seal.

GETtheMANUALS.org

## Installation

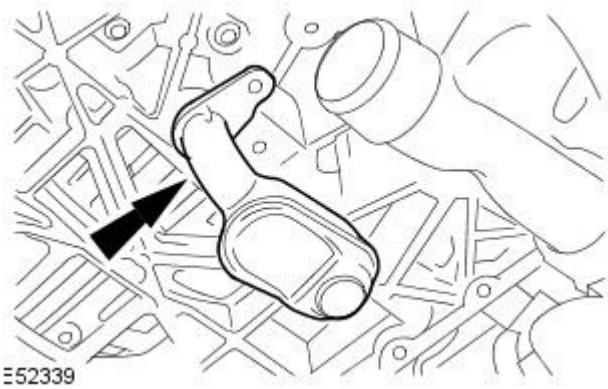


**1.** Install the oil strainer.

- Install a new O-ring seal.
- Tighten to 10 Nm.

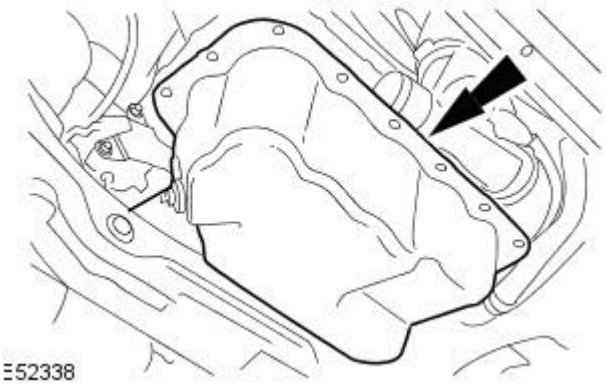


**2.** Loosely install the oil pan.

- Install a new oil pan gasket.

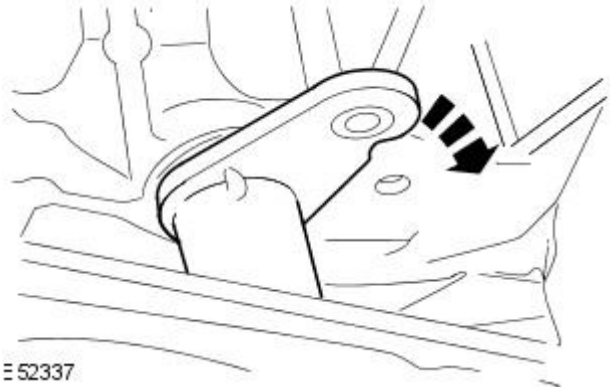


**3.** Reposition the oil strainer.

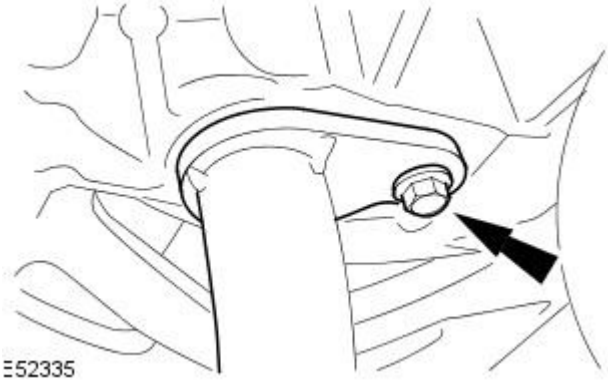


**4.** Install the oil strainer retaining bolt.

- Tighten to 10 Nm.

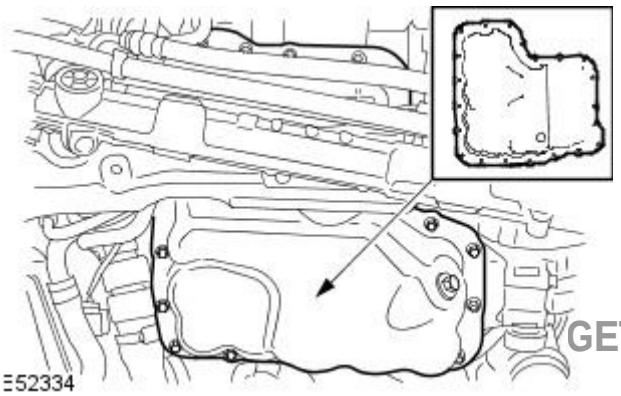


**5.** NOTE: A new oil pan is supplied with the drain plug installed. Check that the drain plug is tightened to 25 Nm.

Install the oil pan.

- Tighten to 10 Nm.

GETtheMANUALS.org

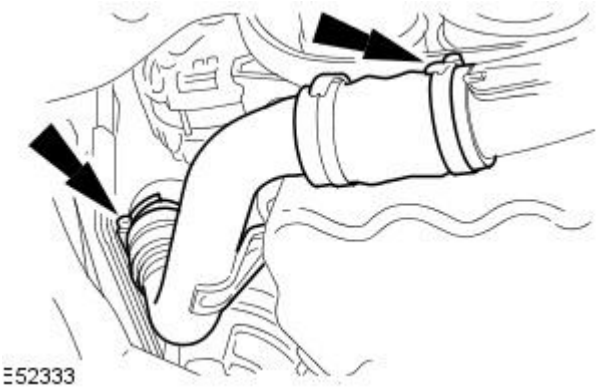


**6.** Install the right-hand turbo charger outlet tube.

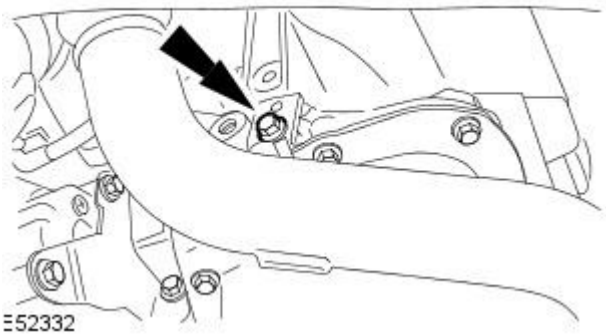


**7.** Install the right-hand turbo charger outlet tube retaining bolt.

- Tighten to 10 Nm.

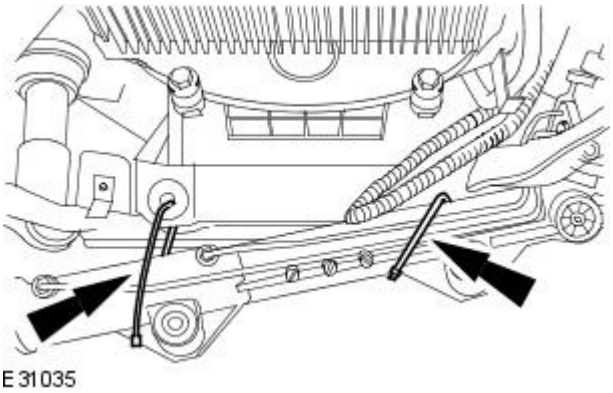


**8.** Remove the piece of string securing the steering gear.

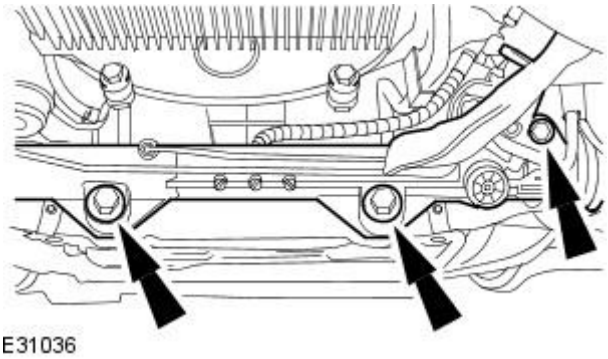


**9.** Install the steering gear.

- Tighten to 100 Nm.

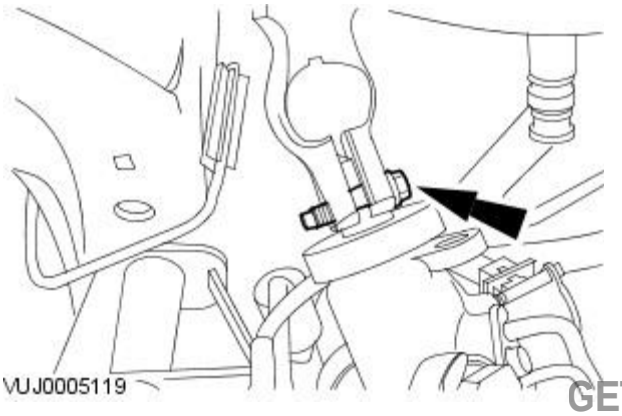


**10.** Install the steering gear shaft pinch bolt.

- Tighten to 35 Nm.

GETtheMANUALS.org

**11.** Lower the vehicle.

**12.** Using special tool lower the left-hand side of the engine.

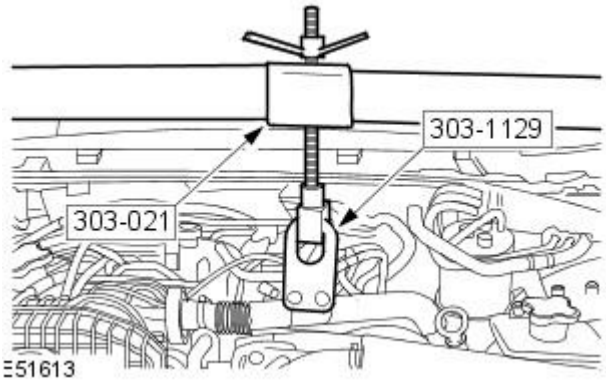


**13.** Raise the vehicle.

**14.** Install the left-hand engine mount retaining nut.

- Tighten to 63 Nm.

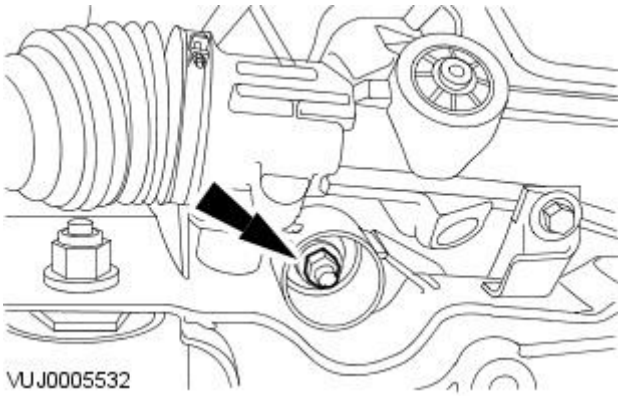


**15.** Install the air deflector.
For additional information, refer to: Air Deflector (501-02 Front End Body Panels, Removal and Installation).

**16.** Lower the vehicle.

**17.** Remove the engine support bracket.

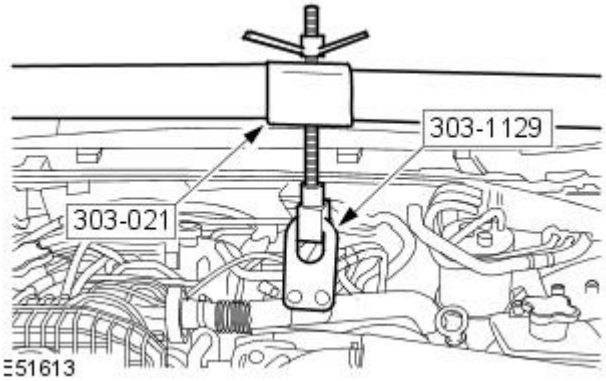


**18.** Remove the engine lifting bracket.

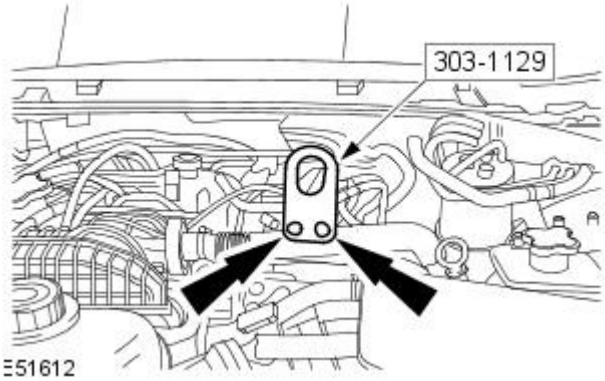


**19.** Remove the engine oil filler cap.

GETtheMANUALS.org

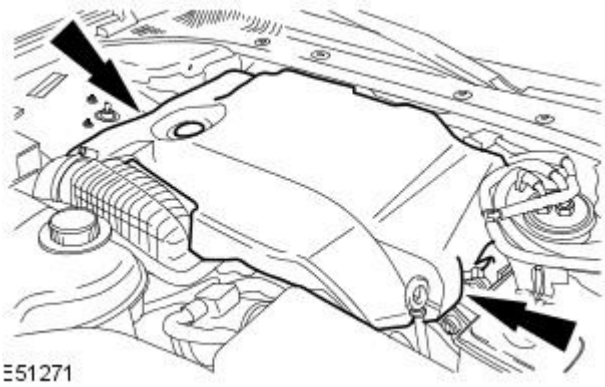


**20.** Install the engine cover.

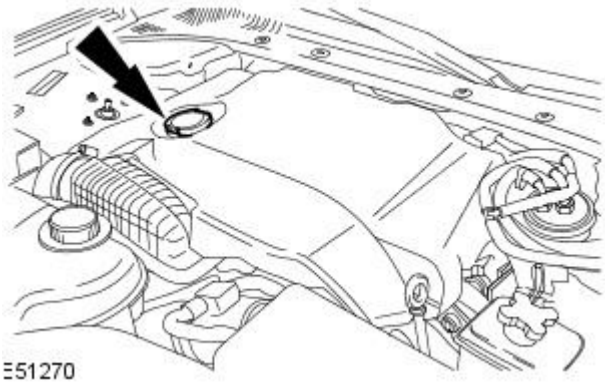


**21.** Check and top-up the engine oil.

**22.** Install the oil filler cap.

GETtheMANUALS.org

# Engine - 2.7L V6 - TdV6 - Oil Pan Extension

In-vehicle Repair

## Removal

Vehicles with automatic transmission

1. Remove the automatic transmission.
   For additional information, refer to: Transmission - 2.7L V6 - TdV6 (307-01 Automatic Transmission/Transaxle, Removal).

Vehicles with manual transmission

2. Remove the manual transmission.
   For additional information, refer to: Transmission (308-03B Manual Transmission/Transaxle - Vehicles With: S6-53 6-Speed Manual Transmission, Removal).

All vehicles

3. Remove the oil pan.
   For additional information, refer to: Oil Pan (303-01C Engine - 2.7L V6 - TdV6, In-vehicle Repair).
4. Remove the air conditioning (A/C) pipe retaining bolt.

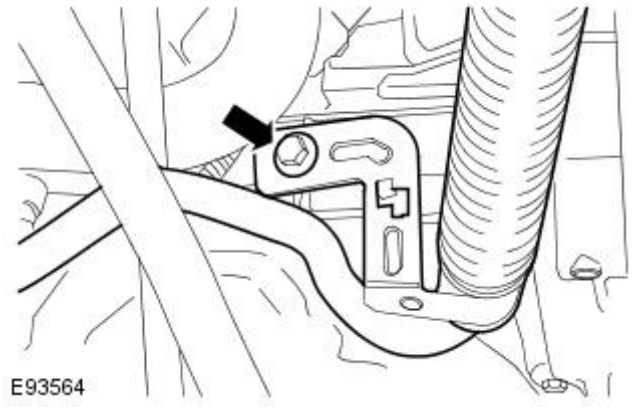


5. Remove the left-hand turbocharger outlet pipe retaining bolt.

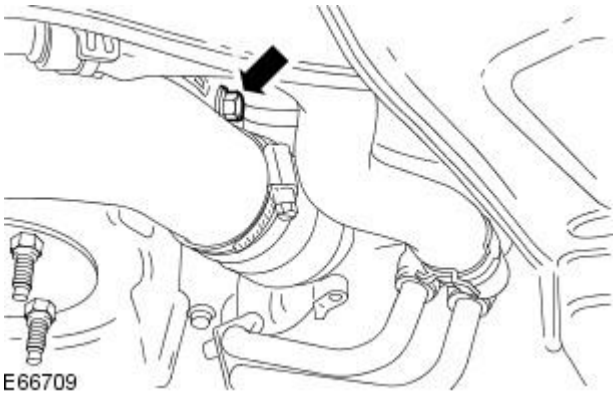


6. Disconnect the left-hand turbocharger outlet pipe.

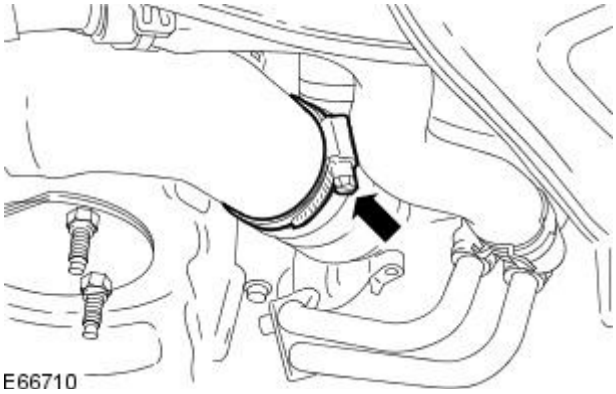


GETtheMANUALS.org

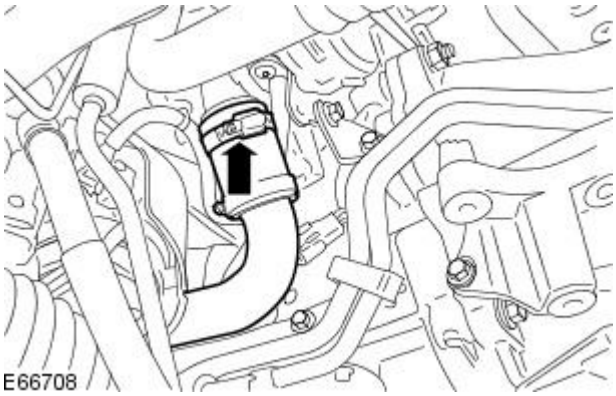


**7.** Remove the left-hand turbocharger outlet pipe from the turbocharger.

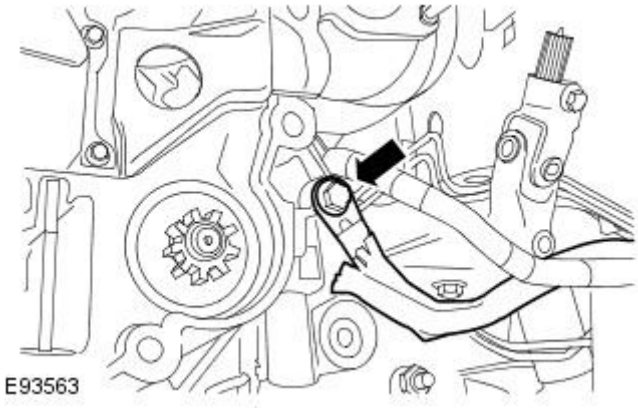


**8.** Detach the engine ground cable.

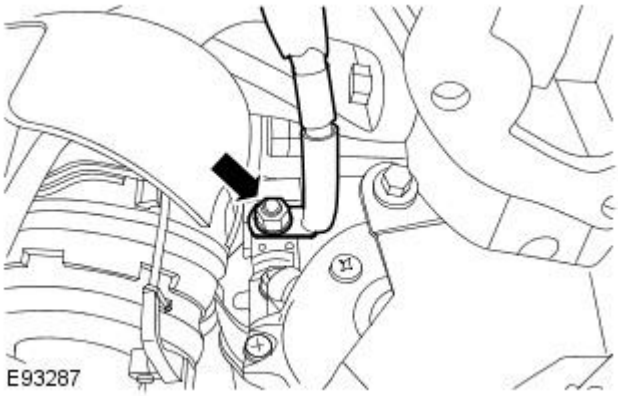


**9.** Detach the starter motor positive cable.

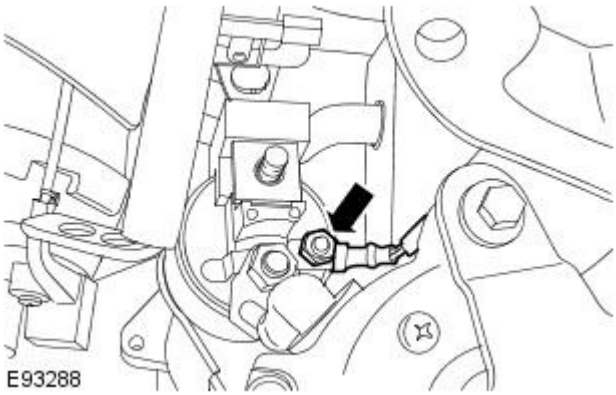


**10.** Detach the starter motor solenoid harness.

GETtheMANUALS.org

**11.** Reposition the starter motor positive cable.

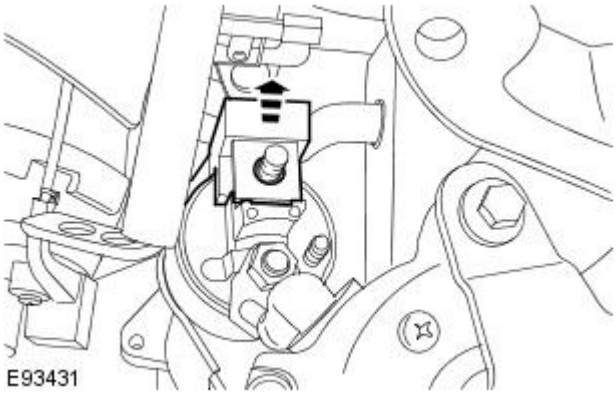


**12.** Remove the starter motor.

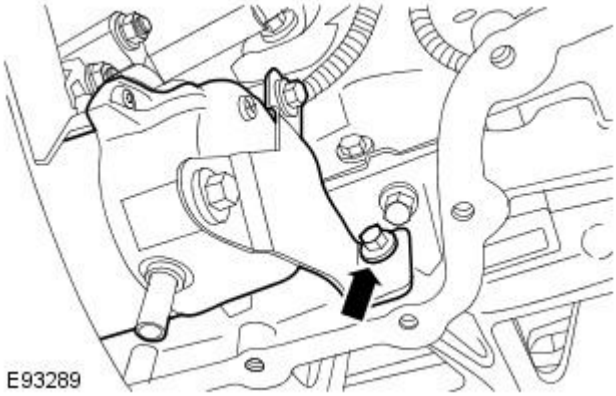


**13.** Detach the oil temperature sensor harness from the cylinder block.

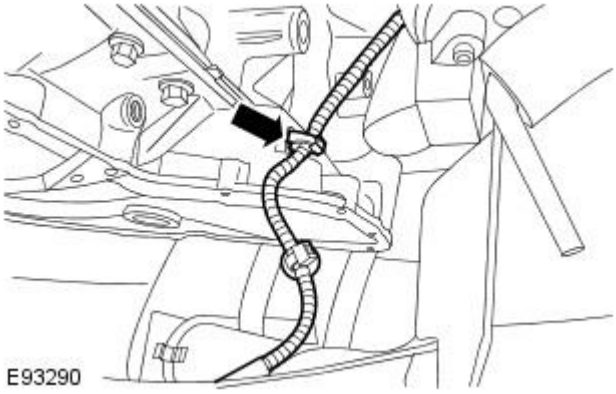


**14.** Remove the A/C compressor lower retaining bolt.

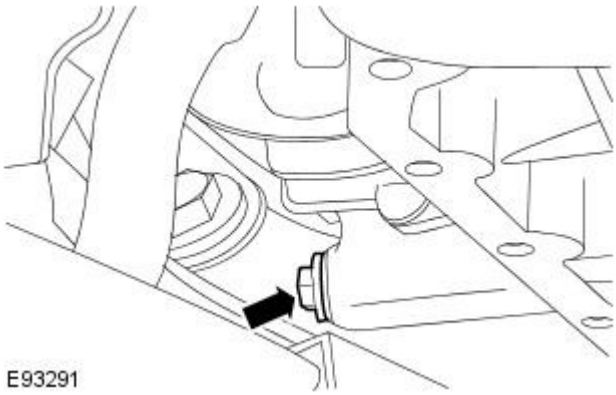


GETtheMANUALS.org

**15.** Remove the accessory drive belt tensioner bracket retaining bolt.

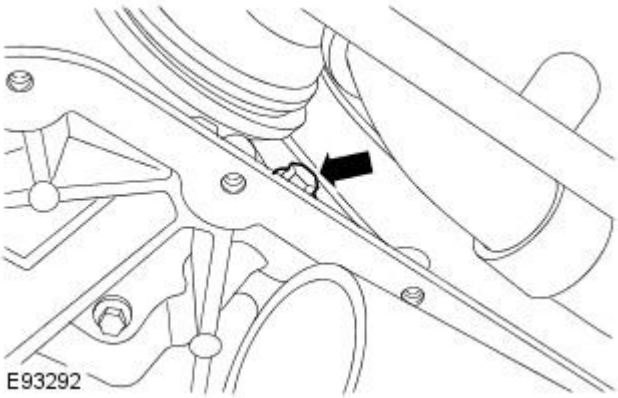


**16.** Remove the charge air cooler pipe retaining bolt.

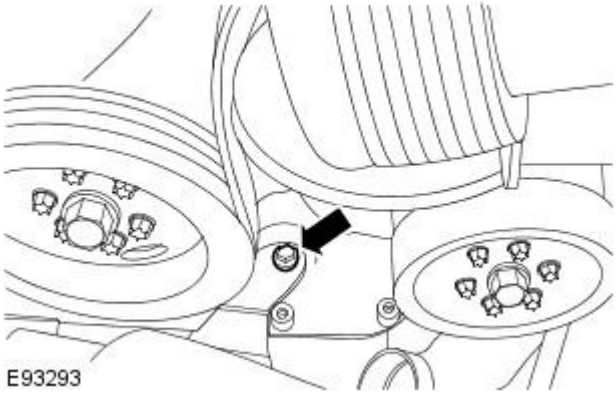


**17.** Remove the oil pan extension.

- NOTE: Note the position of the retaining bolts before removal.

- Remove and discard the gasket.

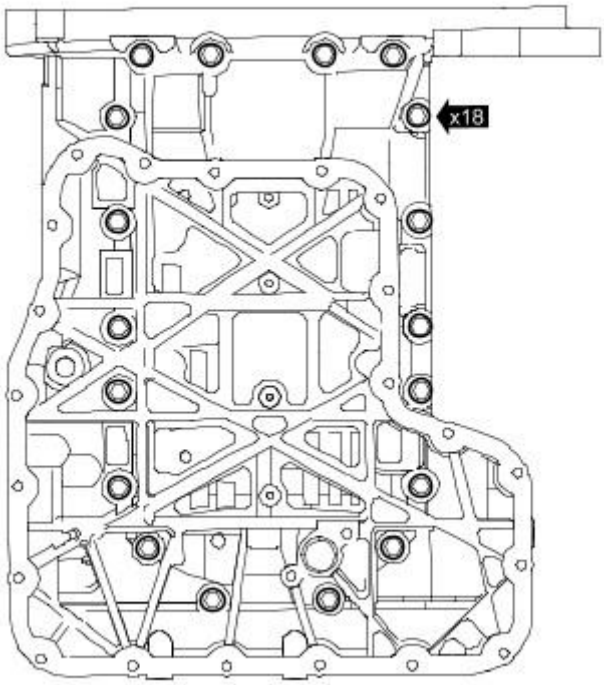


E93419

## Installation

All vehicles

- NOTE: Make sure the oil pan extension mating faces are clean and dry.
- NOTE: Install a new oil pan extension gasket.

GETtheMANUALS.org

1. Apply a 8 mm bead of sealant to the cylinder block in the areas shown. For additional information, refer to: Specifications (303-01C Engine - 2.7L V6 - TdV6, Specifications).

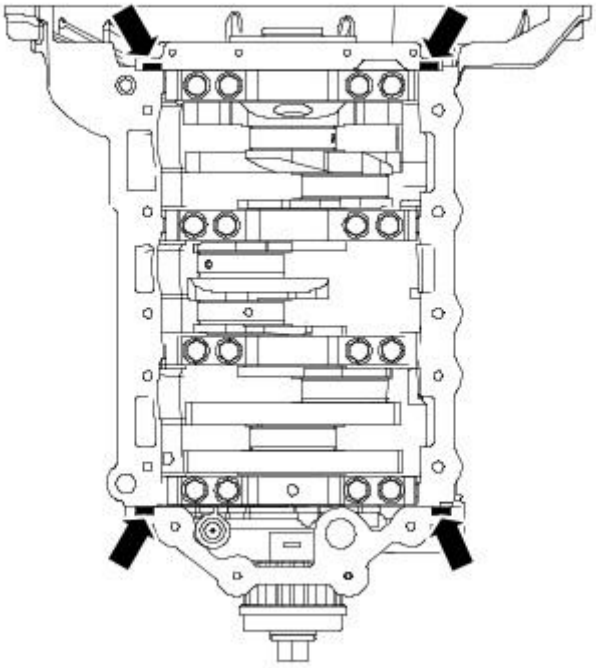

E93678

2. Loosely install all oil pan extension retaining bolts.

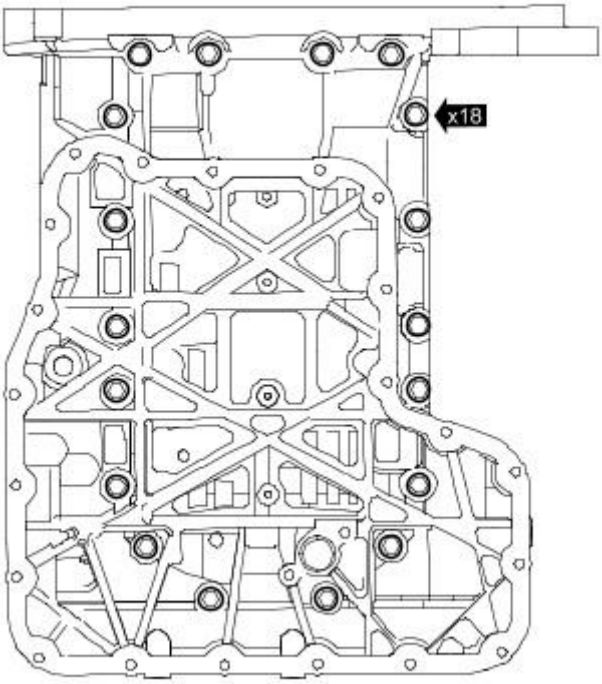


E93419

GETtheMANUALS.org

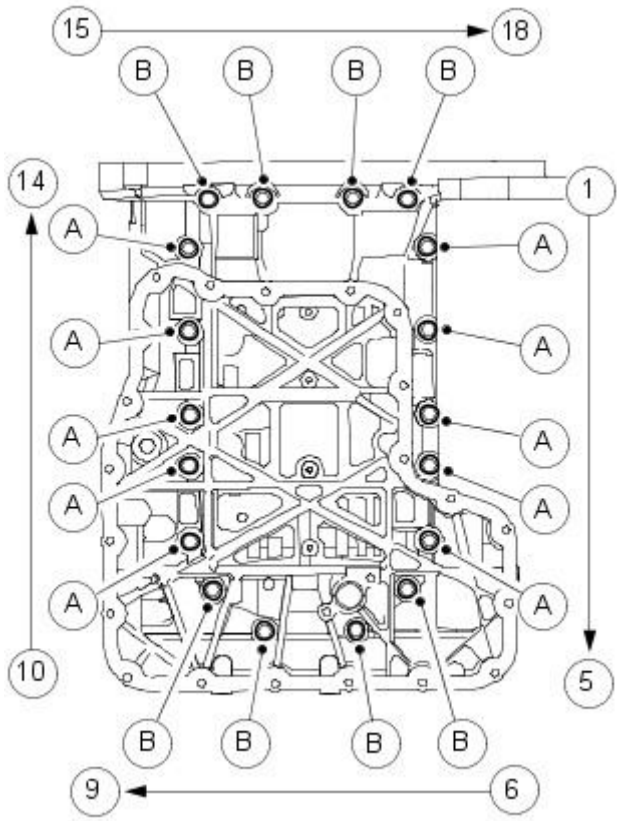

E93676

**3.** NOTE: The retaining bolts must be tightened within twenty minutes of applying the sealant.

Tighten the oil pan extension retaining bolts in the sequence shown.

1. Tighten bolts A to 10 Nm (7 lb.ft). Tighten bolts B to 4 Nm (2 lb.ft).
2. Tighten bolts A to 24 Nm (18 lb.ft). Tighten bolts B to 10 Nm (7 lb.ft).

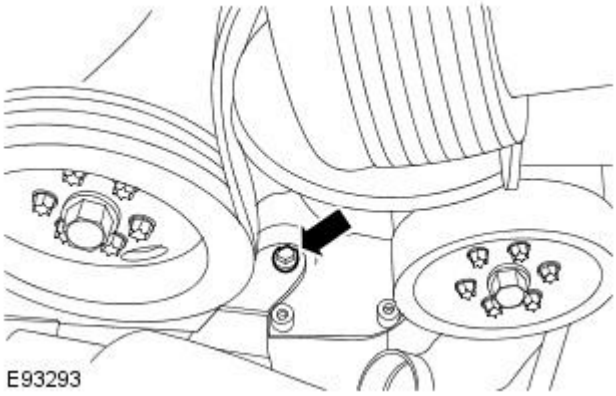
E93293

**4.** Install the charge air cooler pipe retaining bolt.

- Tighten to 10 Nm (7 lb.ft).

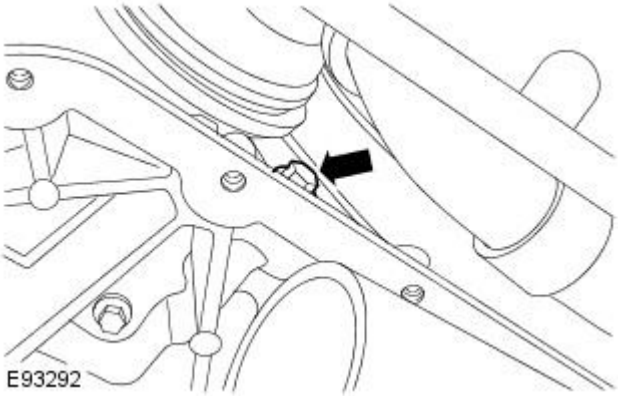
E93292

**5.** Install the accessory drive belt tensioner bracket retaining bolt.

- Tighten to 24 Nm (18 lb.ft).

GETtheMANUALS.org

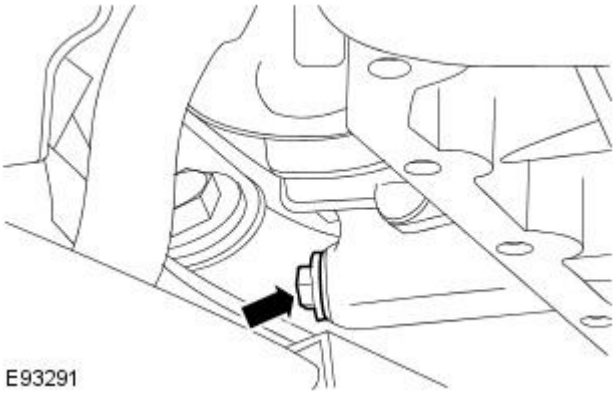


**6.** Install the A/C compressor lower retaining bolt.

- Tighten to 24 Nm (18 lb.ft).

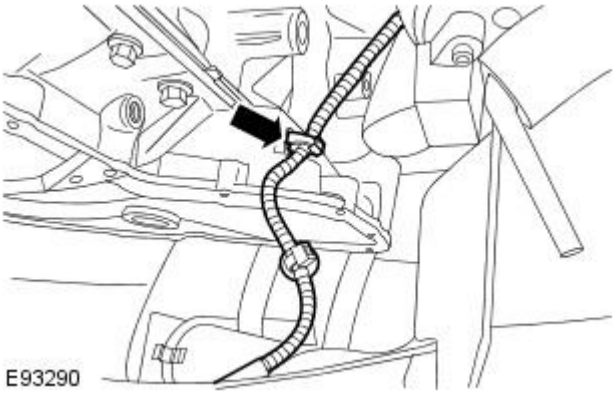


**7.** Attach the oil temperature sensor harness to the cylinder block.

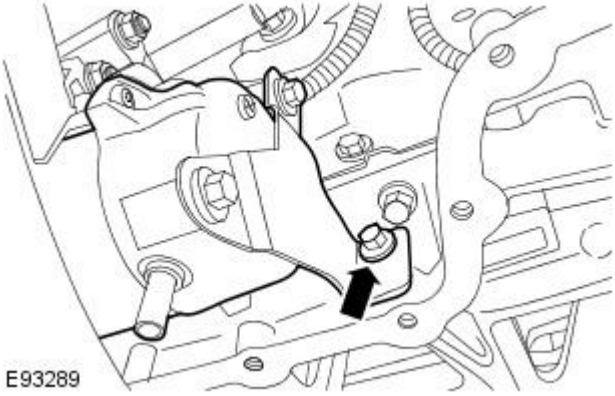


**8.** Install the starter motor.

- Tighten to 24 Nm (18 lb.ft).

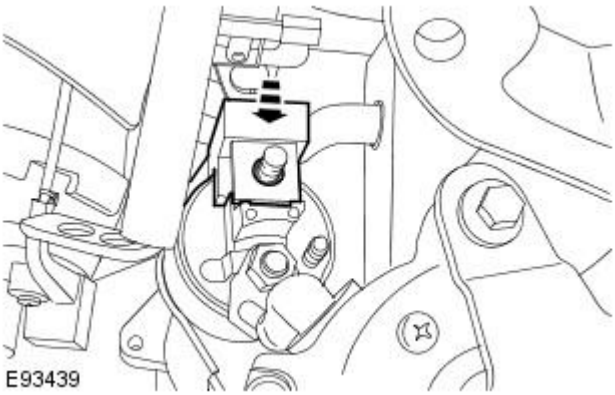


**9.** Reposition the starter motor positive cable.

GETtheMANUALS.org

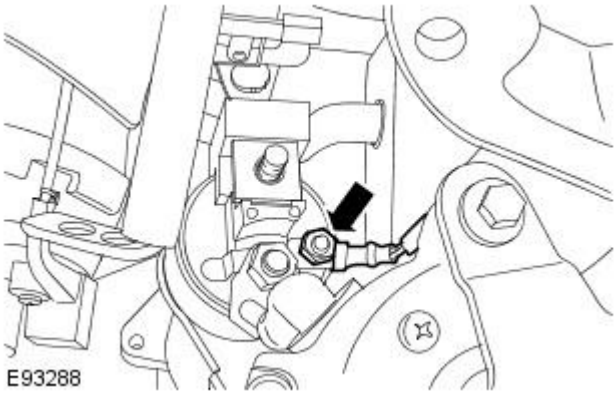


**10.** Attach the starter motor solenoid harness.

- Tighten to 7 Nm (5 lb.ft).

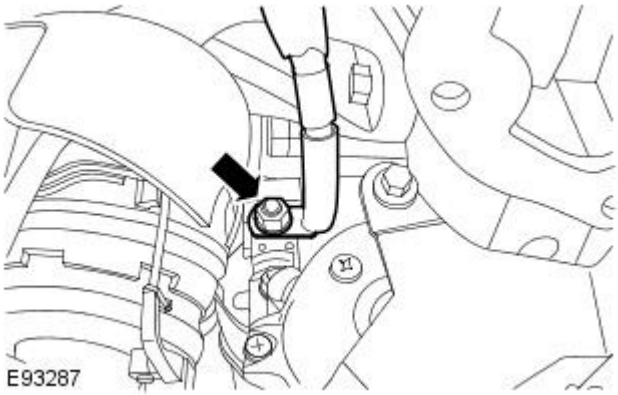


**11.** Attach the starter motor positive cable.

- Tighten to 10 Nm (7 lb.ft).

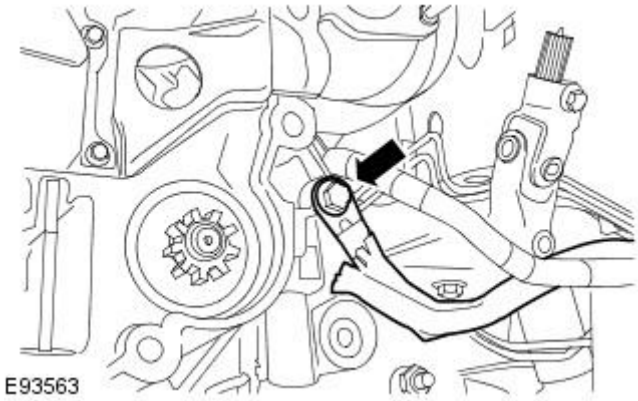


**12.** Attach the engine ground cable.

- Tighten to 24 Nm (18 lb.ft).

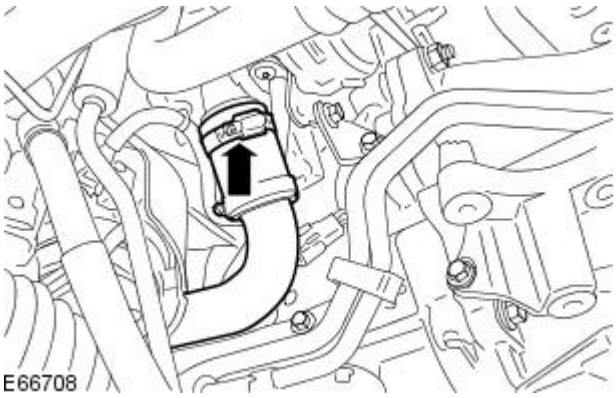


**13.** Install the left-hand turbocharger outlet pipe to the turbocharger.

- Tighten to 5 Nm (4 lb.ft).

GETtheMANUALS.org

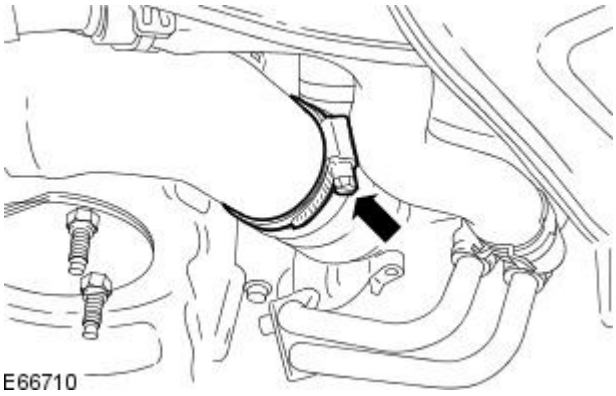


**14.** Connect the left-hand turbocharger outlet pipe.

- Tighten to 5 Nm (4 lb.ft).

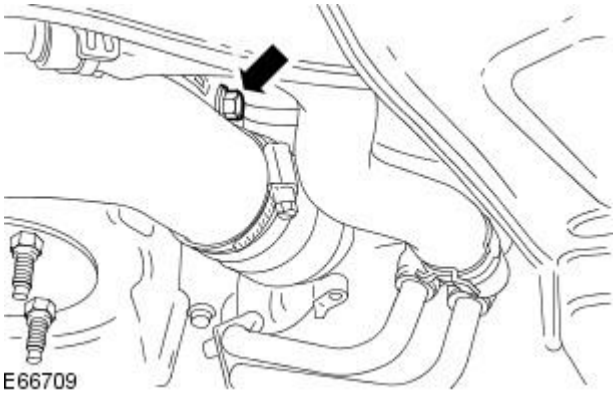


**15.** Install the left-hand turbocharger outlet pipe retaining bolt.

- Tighten to 24 Nm (18 lb.ft).

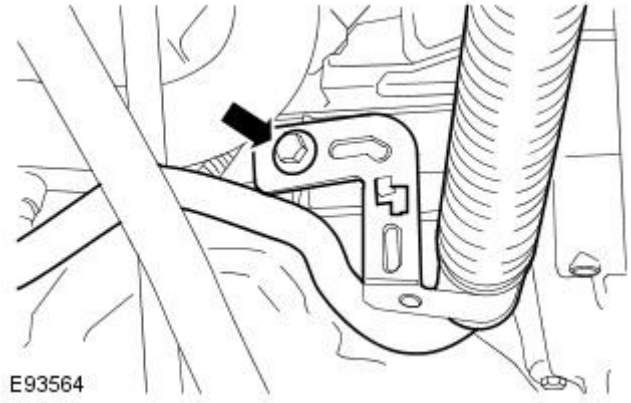


**16.** Install the A/C pipe retaining bolt.

- Tighten to 24 Nm (18 lb.ft).

**17.** Install the oil pan.
For additional information, refer to: Oil Pan (303-01C Engine - 2.7L V6 - TdV6, In-vehicle Repair).

Vehicles with manual transmission

**18.** Install the manual transmission.
For additional information, refer to: Transmission (308-03B Manual Transmission/Transaxle - Vehicles With: S6-53 6-Speed Manual Transmission, Installation).

Vehicles with automatic transmission

**19.** Install the automatic transmission.
For additional information, refer to: Transmission - 2.7L V6 - TdV6 (307-01 Automatic Transmission/Transaxle, Installation).

GETtheMANUALS.org

# Engine - 2.7L V6 - TdV6 - Oil Pump

In-vehicle Repair

## Removal

1. Disconnect the battery ground cable. For additional information, refer to: Battery Disconnect and Connect (414-01 Battery, Mounting and Cables, General Procedures).
2. Remove the crankshaft front oil seal. For additional information, refer to: Crankshaft Front Seal (303-01C Engine - 2.7L V6 - TdV6, In-vehicle Repair).
3. WARNING: Do not work on or under a vehicle supported only by a jack. Always support the vehicle on safety stands.

   Raise and support the vehicle.
4. Remove the oil pan extension.For additional information, refer to: Oil Pan Extension (303-01C Engine - 2.7L V6 - TdV6, In-vehicle Repair).
5. Remove the accessory drive belt tensioner.
   - Remove the bolt.

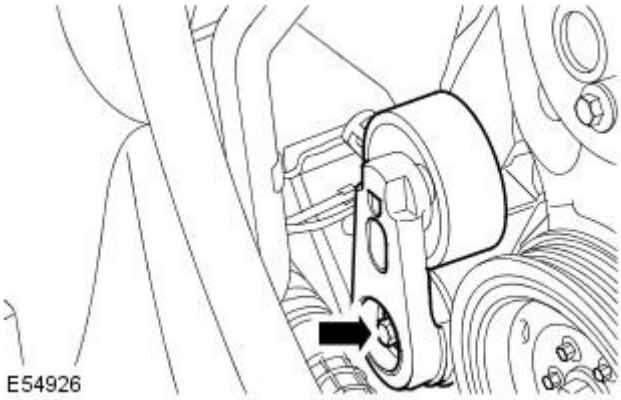


6. Release the right hand turbocharger outlet pipe from the turbocharger.
   - Release the clip.

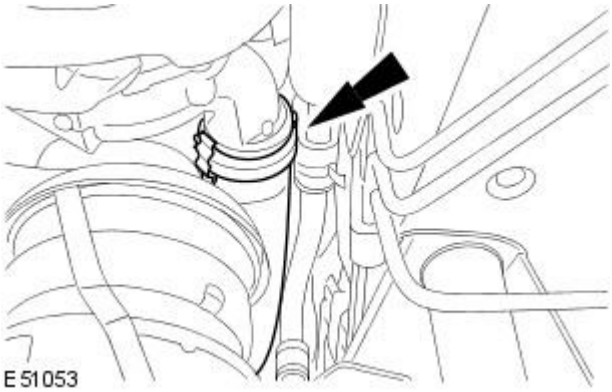


7. Remove the right hand turbocharger outlet pipe.
   - Remove the bolt.
   - Release the clip.

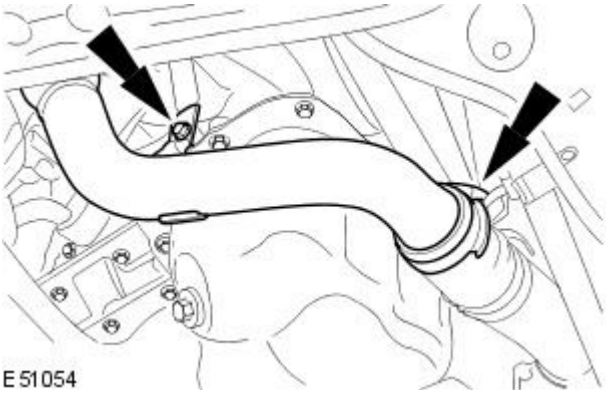


GETtheMANUALS.org

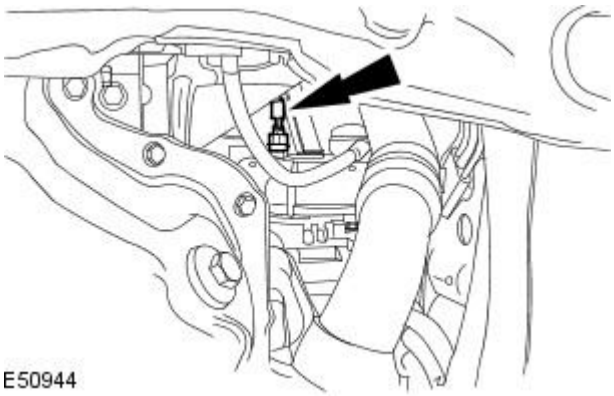


**8.** Disconnect the generator electrical connector.

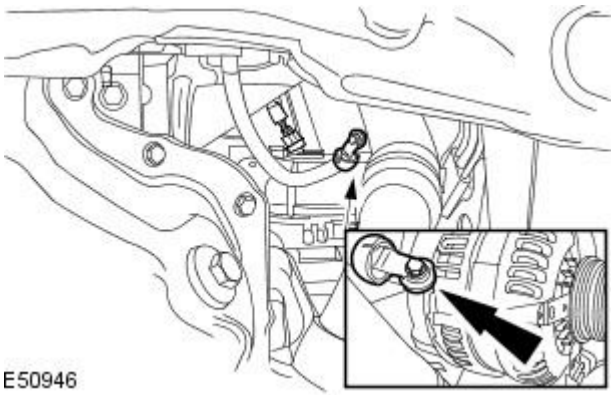


**9.** Disconnect the battery positive cable from the generator.

- Reposition the battery positive cable connector cover.
- Remove the nut.

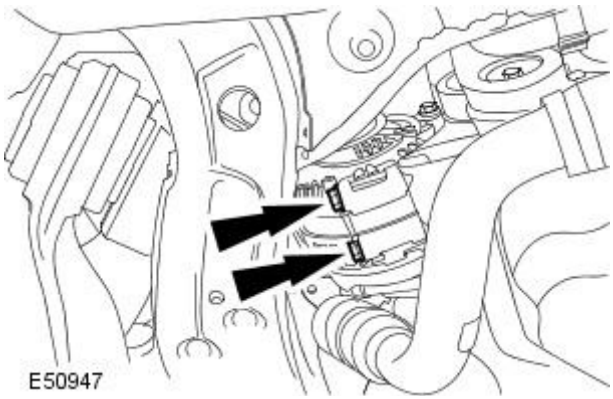


**10.** Remove the 2 generator lower bolts.

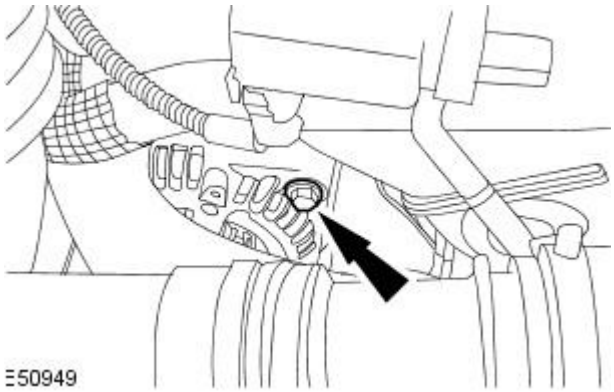


**11.** Release the generator.

- Remove the generator upper bolt.
- Reposition the generator.
- Using a suitable tie strap, secure the generator to the front subframe.

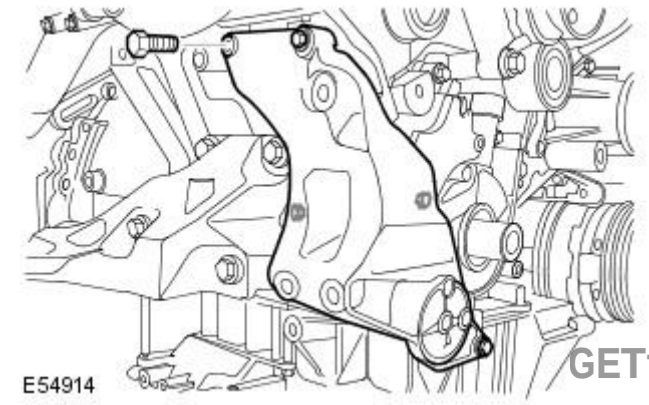


**12.** NOTE: The generator mounting bracket upper rear bolt cannot be fully removed until the generator mounting bracket has been detached from the engine.

Remove the generator mounting bracket.

- Remove the 4 bolts.

GETtheMANUALS.org

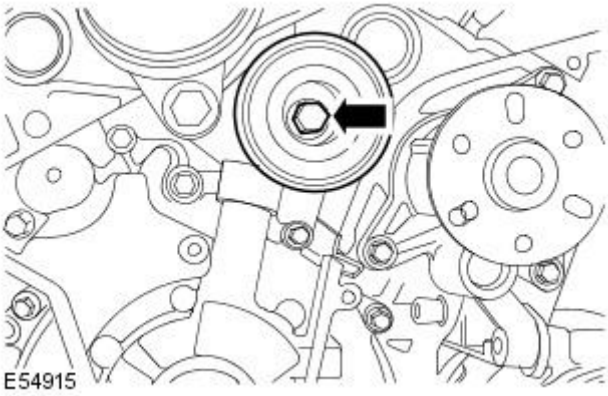


**13.** Remove the timing belt idler pulley.

- Remove the bolt.

**14.** Remove the 2 timing belt cover sealing strips.

**15.** Remove the oil pump.

- Remove the 10 bolts.
- Remove and discard the gasket.

## Installation

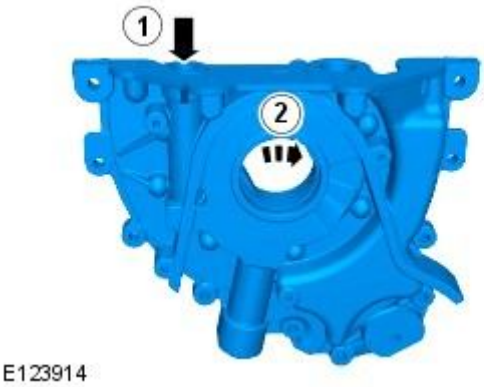


**1.** Prime the oil pump.

1. Fill the orifice shown with 20 ml of engine oil.For additional information, refer to: Specifications (303-01C Engine - 2.7L V6 - TdV6, Specifications).
2. Rotate the oil pump drive 2 complete turns.

GETtheMANUALS.org

E123911

**2.** CAUTIONS:

Make sure that the mating faces are clean and free of foreign material.

Make sure the gasket is installed correctly.

Rotate the oil pump drive to align with the flats on the crankshaft before installation.

Install the oil pump.

- Clean the component mating faces.
- Install a new gasket.
- Lightly tighten the bolts in the positions shown.

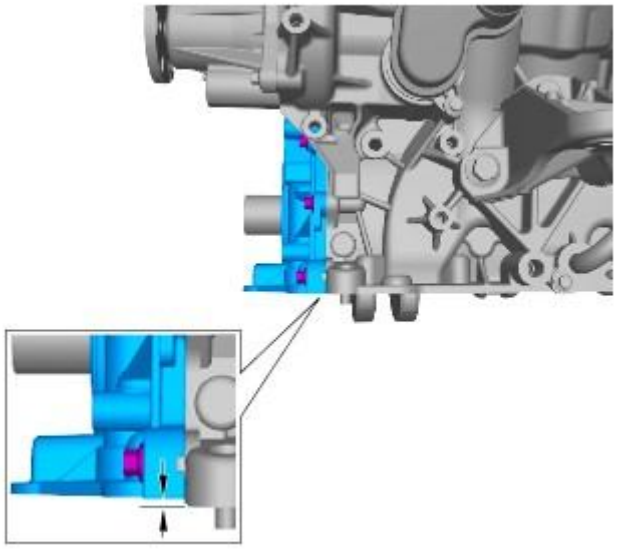

E123913

**3.** CAUTION: Make sure the base of the oil pump is aligned within 0.2 mm of the base of the engine block. Failure to follow this instruction may result in damage to the vehicle.

• NOTE: Vehicles fitted with oil pumps without dowels.

Check the oil pump to engine block alignment.

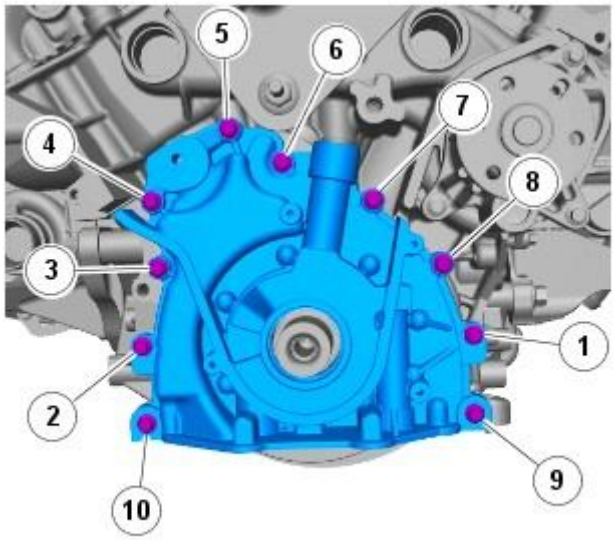


E123912

**4.** NOTE: All vehicles.

Secure the oil pump.

- Tighten the 10 bolts to 10 Nm in the sequence shown.

**5.** Install the timing belt cover sealing strips.

**6.** Install the timing belt idler pulley.

- Tighten the bolt to 45 Nm.

GETtheMANUALS.org

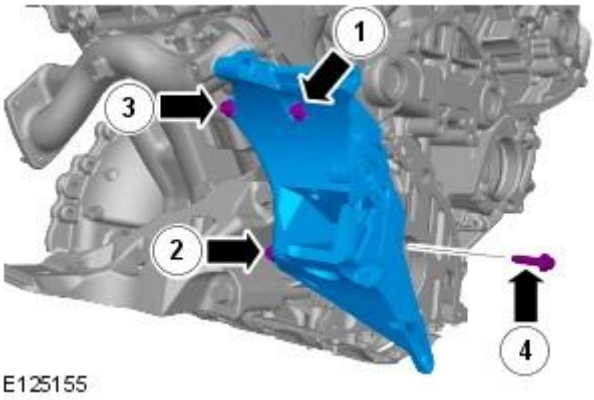


**7.** NOTE: The generator mounting bracket upper rear bolt must be installed to the generator mounting bracket before the generator bracket is installed to the engine.

Install the generator mounting bracket.

- Loosely install the 4 bolts.
- Tighten the 4 bolts in the sequence shown to 23 Nm.

**8.** Install the generator.

- Tighten the 3 bolts to 47 Nm.

**9.** Connect the generator electrical connections.

- Attach the battery positve cable and tighten the nut to 12 Nm.
- Reposition the battery positive cable connector cover.
- Connect the electrical connection.

**10.** Install the RH turbocharger outlet pipe.

- Secure the 2 clips.

**11.** Install the accessory drive belt tensioner.

- Tighten the bolt to 47 Nm.

**12.** Install the oil pan extension. For additional information, refer to: Oil Pan Extension (303-01C Engine - 2.7L V6 - TdV6, In-vehicle Repair).

**13.** Install the crankshaft front oil seal. For additional information, refer to: Crankshaft Front Seal (303-01C Engine - 2.7L V6 - TdV6, In-vehicle Repair).

**14.** Connect the battery ground cable. For additional information, refer to: Battery Disconnect and Connect (414-01 Battery, Mounting and Cables, General Procedures).

GETtheMANUALS.org

# Engine - 2.7L V6 - TdV6 - Timing Belt

In-vehicle Repair

| Special Tool(s) | |
|---|---|
| E52711 | Check pin - camshaft pulleys<br><br>303-1132 |
| E52710 | Timing pin - camshaft pulleys<br><br>303-1126 |
| 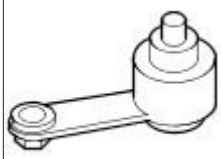 E52709 | Timing pin flywheel auto<br><br>303-1117 |
| E52708 | Timing pin flywheel manual<br><br>303-1116 |

## Removal

All vehicles

1. Disconnect the battery.
   For additional information, refer to: Battery Disconnect and Connect (414-01 Battery, Mounting and Cables, General Procedures).
2. Remove the timing belt cover.
   For additional information, refer to: Engine Front Cover - VIN Range: N52048->N99999 (303-01B Engine - V8 4.2L Petrol/V8 S/C 4.2L Petrol, In-vehicle Repair).
3. Remove the starter motor retaining bracket.

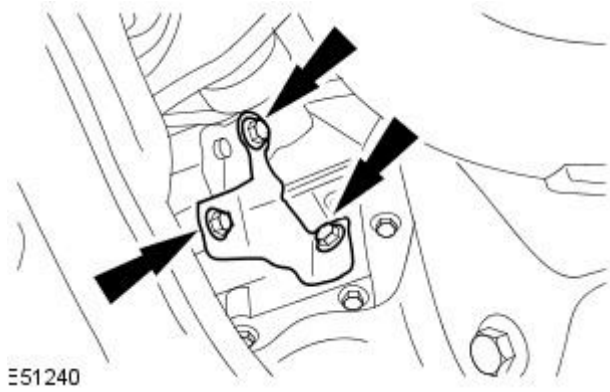


GETtheMANUALS.org

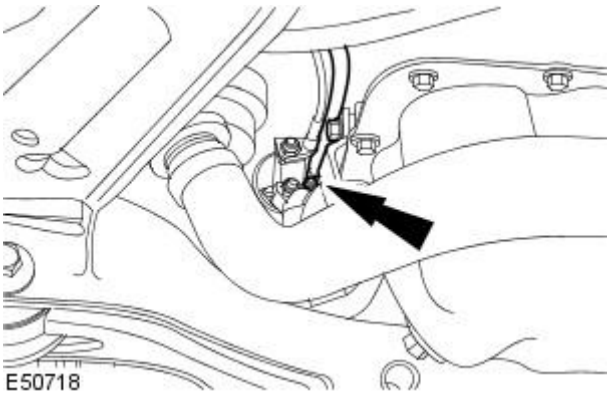


**4.** Detach the starter motor solenoid harness.

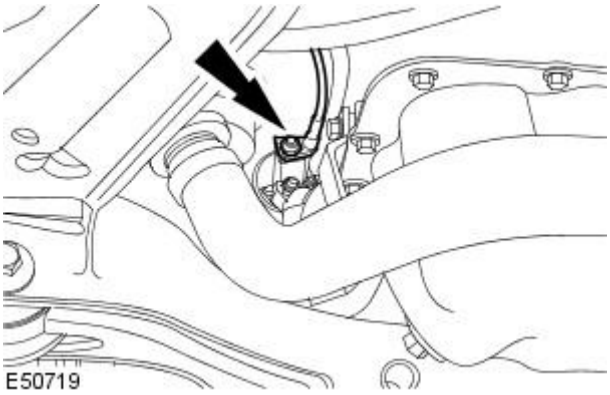


**5.** Detach the starter motor cable.

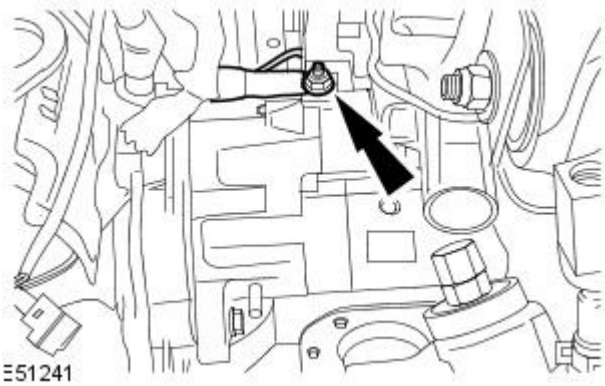


**6.** Detach the starter motor solenoid harness.

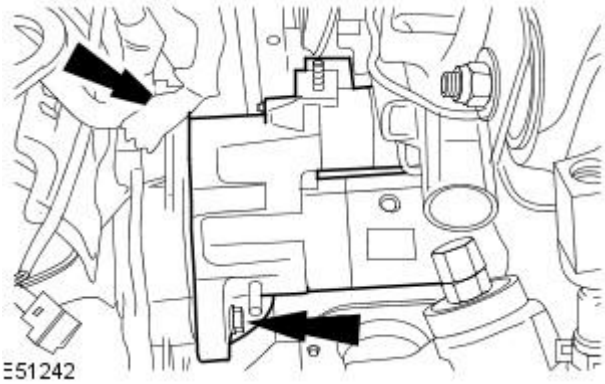


**7.** Detach the starter motor.

**8.** NOTE: Remove the locking pin access grommet.

Align the timing pin hole.

- Rotate the crankshaft clockwise.

Vehicles with automatic transmission

GETtheMANUALS.org

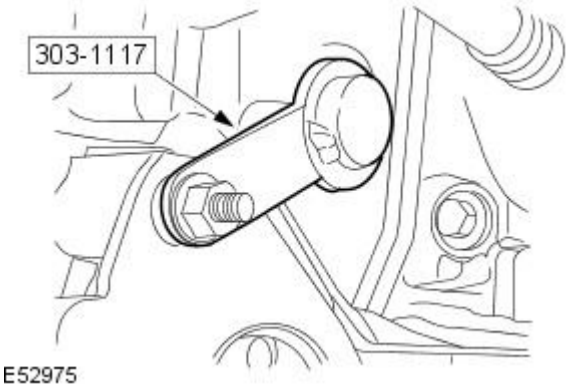

E52975

**9.** Using the special tool, lock the flexplate.

Vehicles with manual transmission

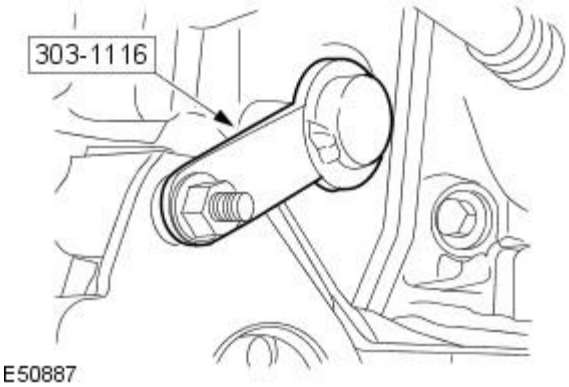

E50887

**10.** Using the special tool, lock the flywheel.

All vehicles

**11.** Lower the vehicle.

**12.** CAUTION: If the camshafts are not aligned to the correct position, remove the special tool and rotate the crankshaft 180 degrees.

Check that the left-hand camshaft alignment hole is at the 7 0`clock position and that the right-hand camshaft alignment hole is at the 5 0`clock position.

**13.** Remove the auxillary drive belt pulley.

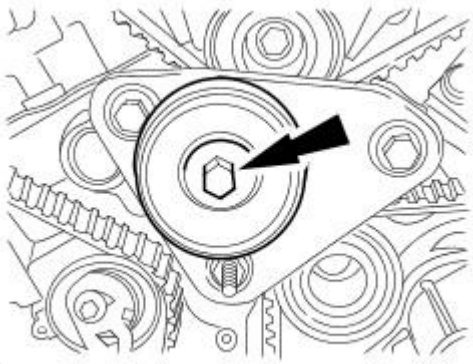
E50888

**14.** Remove the auxillary drive belt pulley bracket.

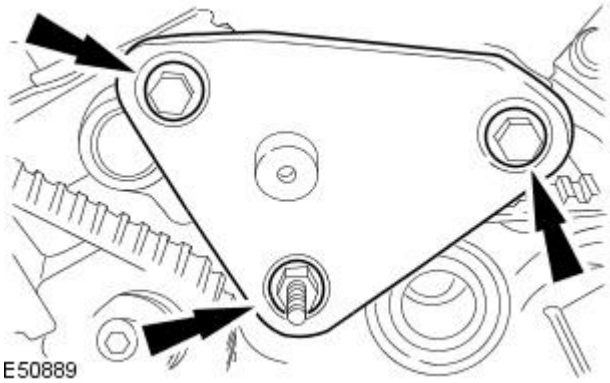
E50889

GETtheMANUALS.org

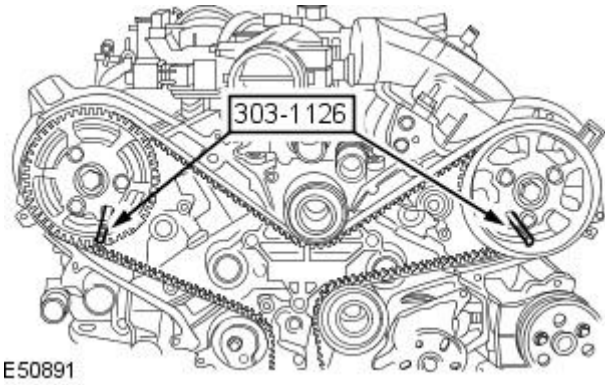


**15.** Using the special tools, lock the camshaft pulleys.

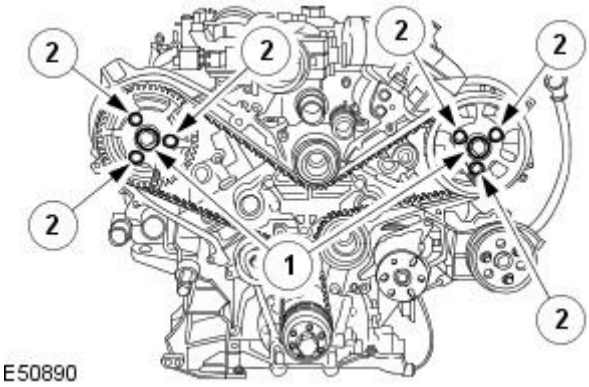


**16.** CAUTION: The camshaft pulley hub must be counter held while undoing the camshaft pulley hub retaining bolts. Failure to follow this instruction may result in damage to the special tools and the engine.

Undo but do not remove the camshaft pulley securing bolts.

1. Counter hold the camshaft pulley hub.
2. Undo but do not remove the camshaft pulley securing bolts.

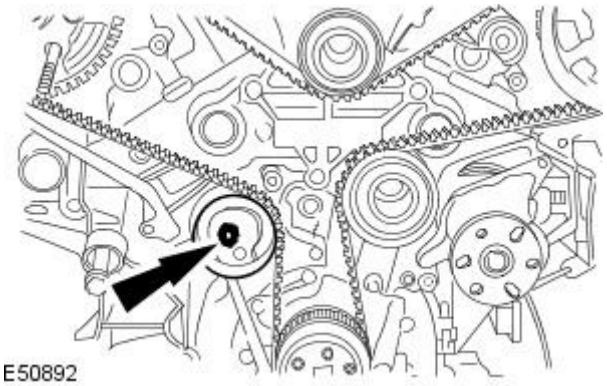


**17.** Remove and discard the timing belt tensioner.

- Release the timing belt tensioner.

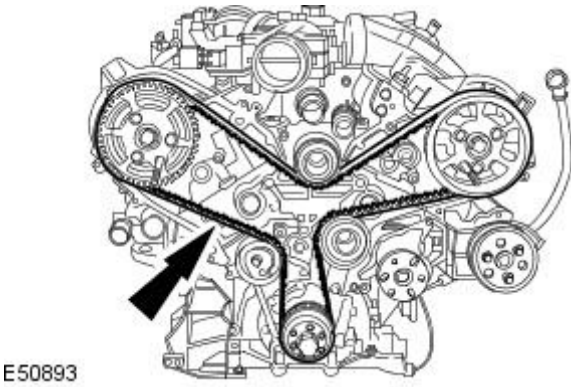


**18.** Remove and discard the timing belt.

## Installation

All vehicles

GETtheMANUALS.org

**1.** Rotate both camshaft pulleys fully clockwise.

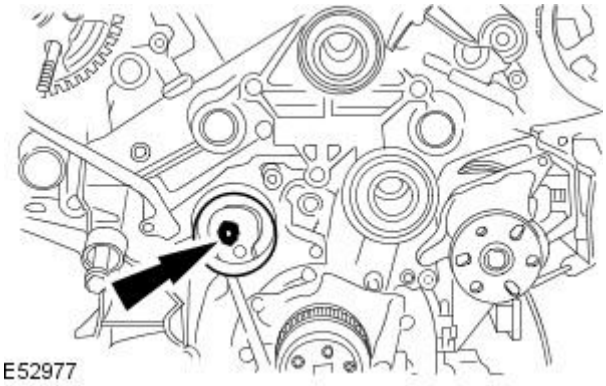


**2.** Install a new timing belt tensioner.

- Do not fully tighten the retaining bolt.

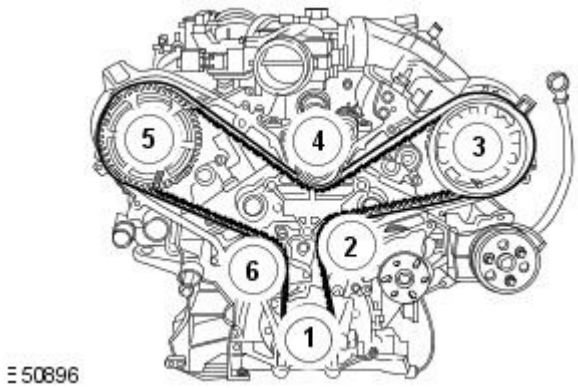


**3.** CAUTION: Make sure that the timing belt slack is at the timing belt tensioner. Failure to follow this instruction may result in damage to the engine.

Install the timing belt in the sequence shown.

1. Install the timing belt to the crankshaft pulley.
2. Attach the timing belt to the idler pulley.
3. Attach the timing belt to the left-hand camshaft pulley.
4. Attach the timing belt to the idler pulley.
5. Attach the timing belt to the right-hand camshaft pulley.
6. Attach the timing belt to the timing belt tensioner.

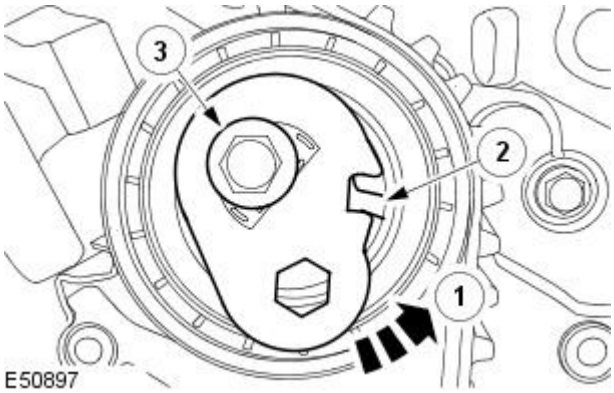


**4.** CAUTION: Make sure the timing belt tensioner window is correctly aligned. Failure to follow this instruction may result in damage to the engine.

Tension the timing belt.

1. Rotate the tensioner.
2. Make sure the tensioner window is aligned.
3. Tighten to 24 Nm.

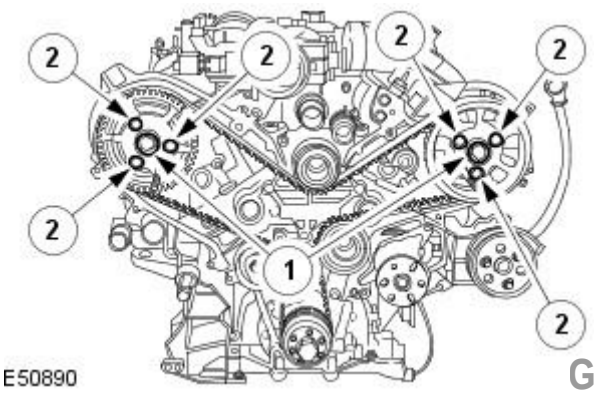


**5.** CAUTION: The camshaft pulley hub must be counter held while undoing the camshaft pulley hub retaining bolts. Failure to follow this instruction may result in damage to the special tools and the engine.

Fully tighten the camshaft pulley retaining bolts.

1. Counter hold the camshaft pulley hub.
2. Tighten to 23 Nm.

GETtheMANUALS.org

6. Raise the vehicle.

Vehicles with automatic transmission

7. Remove the special tool.

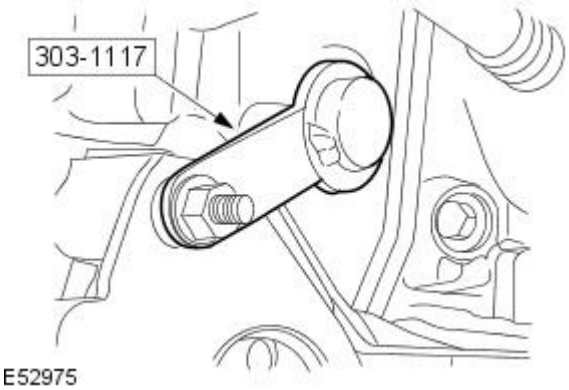


Vehicles with manual transmission

8. Remove the special tool.

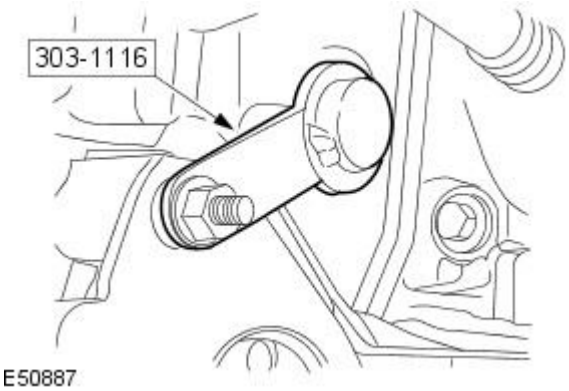


All vehicles

9. Lower the vehicle.
10. Remove the special tools.

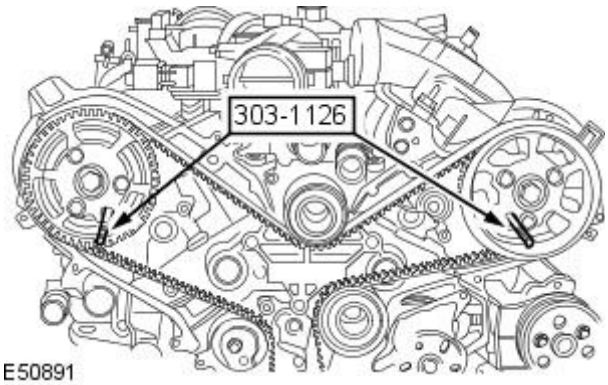


11. CAUTION: Do not rotate the crankshaft counter clockwise.

Rotate the crankshaft clockwise two complete turns.

12. Raise the vehicle.

Vehicles with automatic transmission

13. Using the special tool, lock the flexplate.

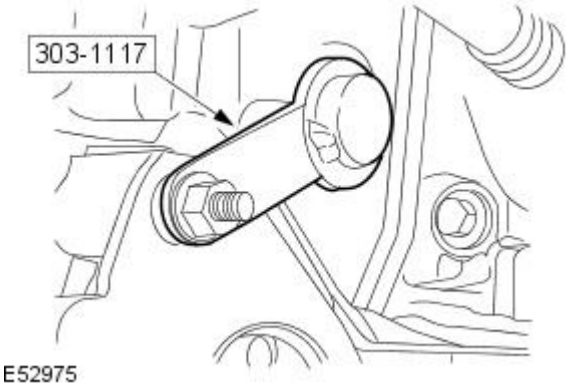


GETtheMANUALS.org

Vehicles with manual transmission

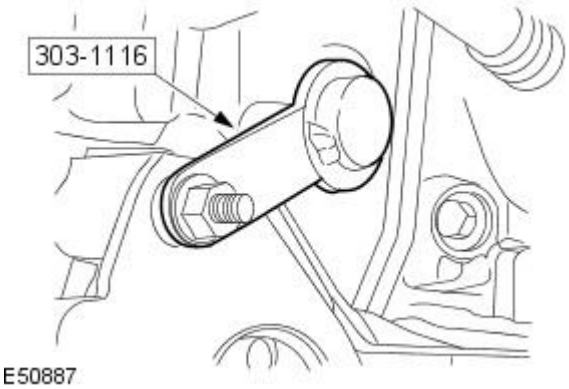


**14.** Using the special tool, lock the flywheel.

All vehicles

**15.** Lower the vehicle.

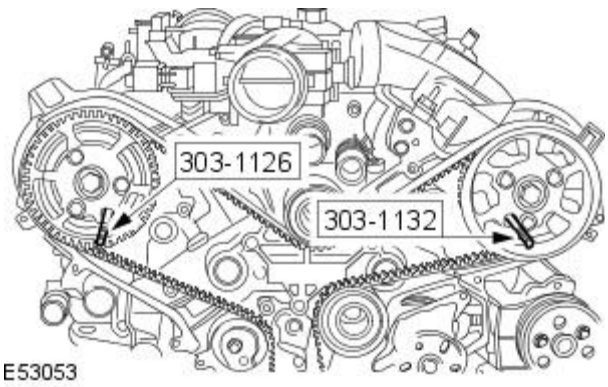


**16.** CAUTION: If the camshafts are misaligned repeat the timing belt instalation procedure.

Using the special tools, make sure the camshafts are aligned.

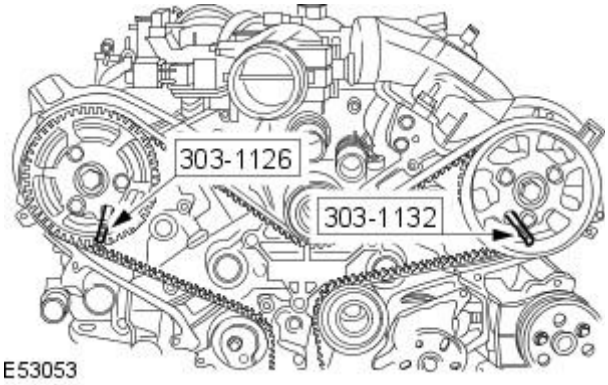


**17.** Remove the special tools.

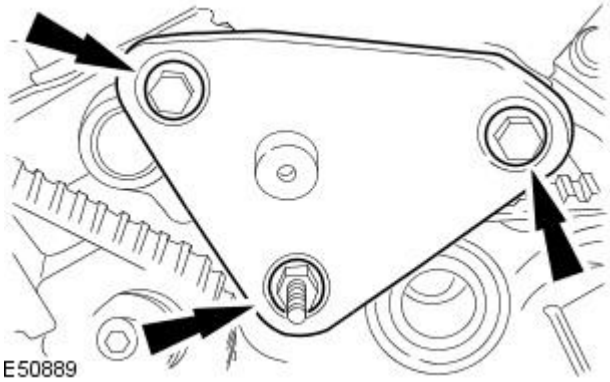


**18.** Install the auxillary drive belt pulley bracket.

GETtheMANUALS.org

**19.** Install the auxillary drive belt pulley.

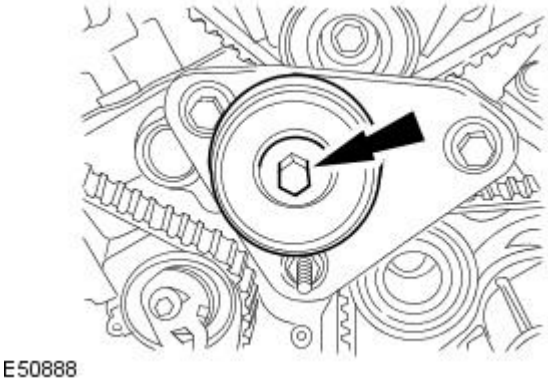


**20.** Raise the vehicle.

Vehicles with automatic transmission

**21.** Remove the special tool.

- Install the grommet.

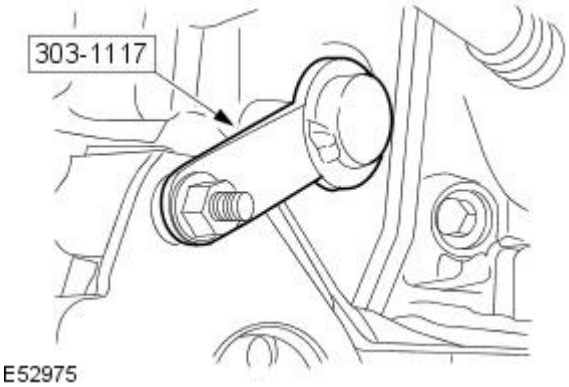


Vehicles with manual transmission

**22.** Remove the special tool.

- Install the grommet.

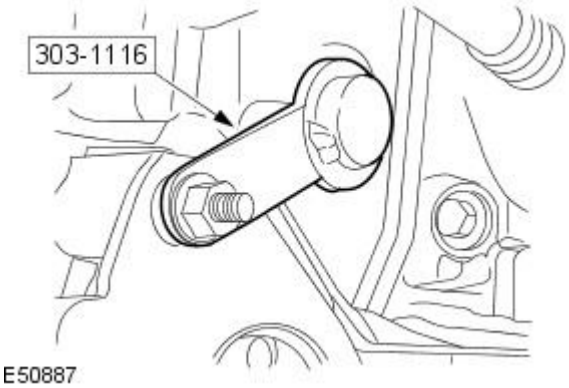


All vehicles

**23.** Attach the starter motor.

- Tighten to 48 Nm.

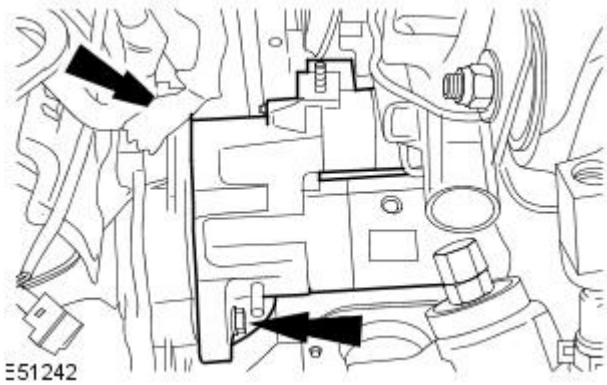


GETtheMANUALS.org

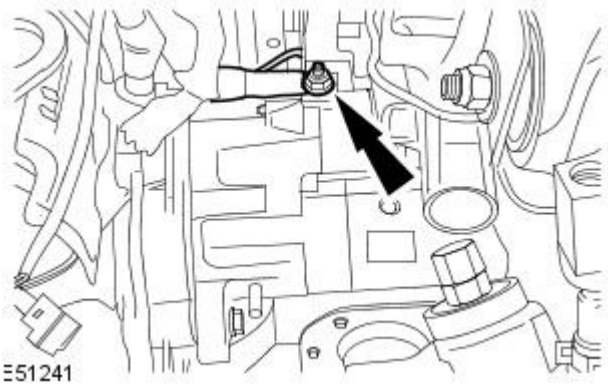


**24.** Attach the starter motor solenoid harness.

- Tighten to 8 Nm.

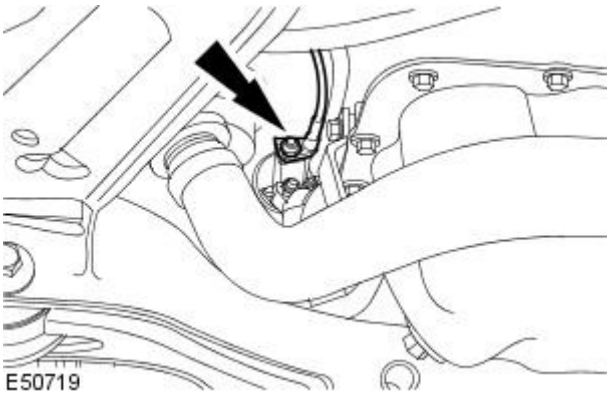


**25.** Attach the starter motor cable.

- Tighten to 7 Nm.

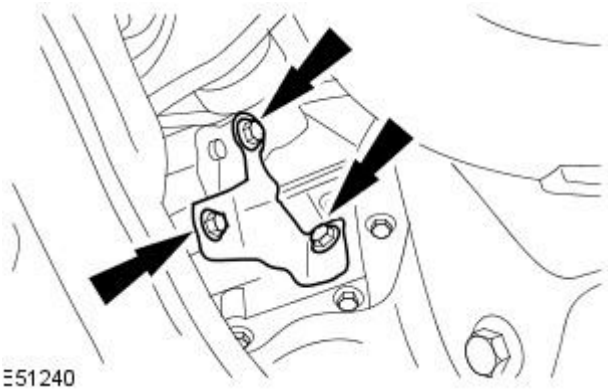


**26.** Install the starter motor retaining bracket.

- Tighten to 23 Nm.

**27.** Install the timing belt cover.
For additional information, refer to: Engine Front Cover - VIN Range: N52048->N99999 (303-01B Engine - V8 4.2L Petrol/V8 S/C 4.2L Petrol, In-vehicle Repair).

**28.** Connect the battery.
For additional information, refer to: Battery Connect (414-01 Battery, Mounting and Cables, General Procedures).

GETtheMANUALS.org

# Engine - 2.7L V6 - TdV6 - Timing Belt Cover

In-vehicle Repair

| Special Tool(s) | |
|---|---|
| 303-703 | Accessory belt detensioner.<br><br>303-703 |

## Removal

1. Remove the air cleaner.
   For additional information, refer to: Air Cleaner (303-12C Intake Air Distribution and Filtering - 2.7L V6 - TdV6, Removal and Installation).
2. Remove the oil filler cap.

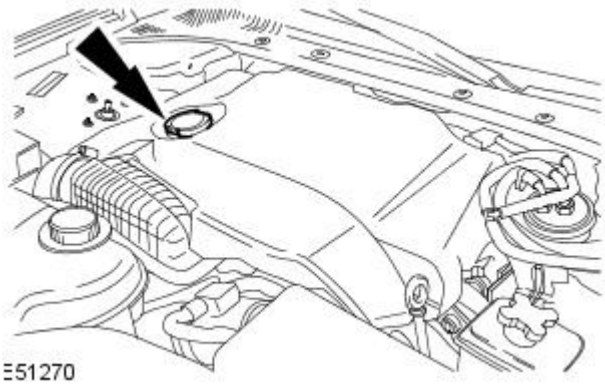


3. Remove the engine cover.

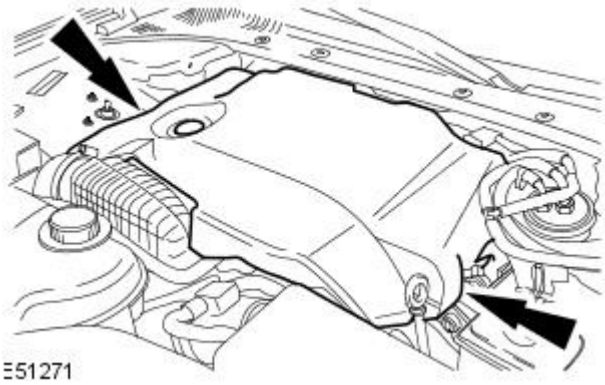


4. Remove the air deflector.
   For additional information, refer to: Air Deflector (501-02 Front End Body Panels, Removal and Installation).
5. Detach the accessory drive belt.
   1. Using the special tool, rotate the accessory drive belt tensioner counter clockwise.
   2. Remove the accessory drive belt.

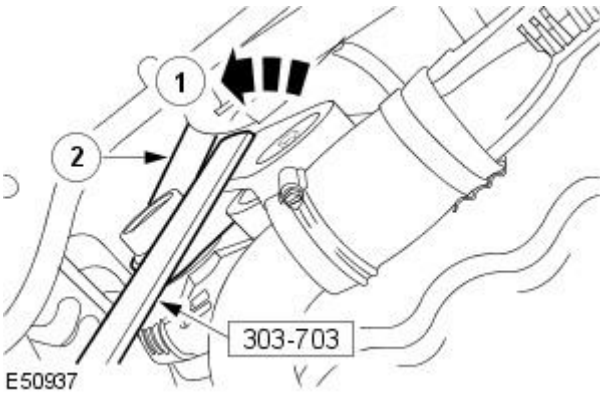


6. Lower the vehicle.

GETtheMANUALS.org

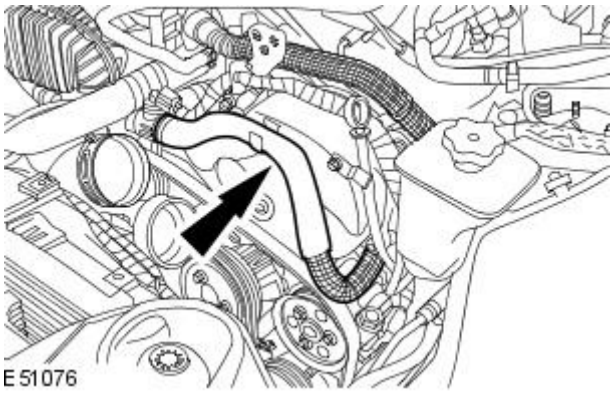


**7.** Detach the coolant hose.

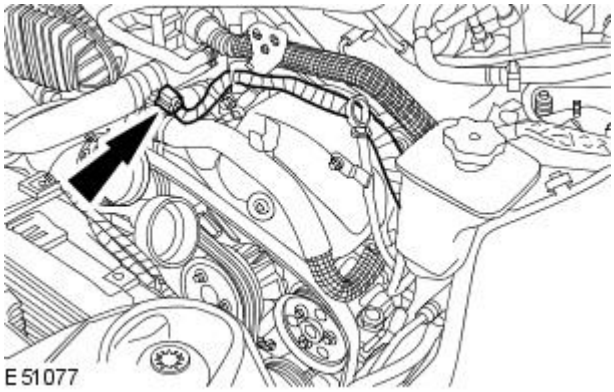


**8.** Disconnect the coolant temperature sensor.

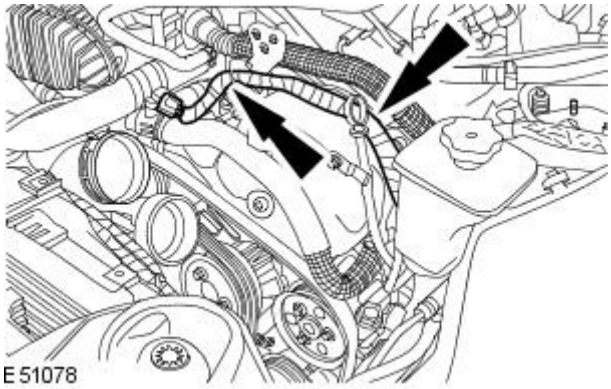


**9.** Detach the coolant temperature sensor wiring harness.

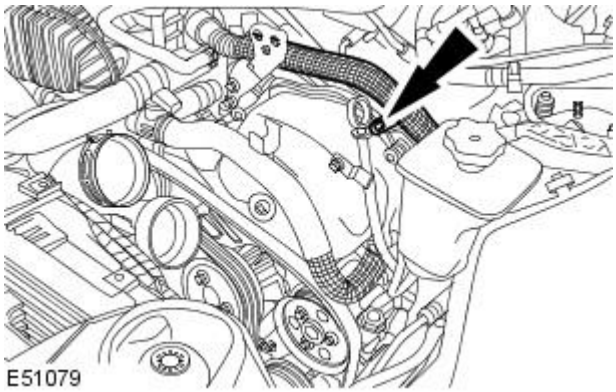


**10.** Detach the exhaust gas recirculation (EGR) valve tube.

- Remove the retaining bolt.

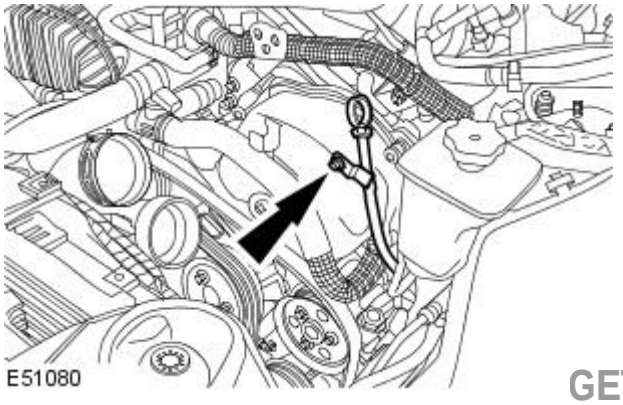


**11.** Detach the oil level indicator tube.

- Remove the retaining bolt.

GETtheMANUALS.org

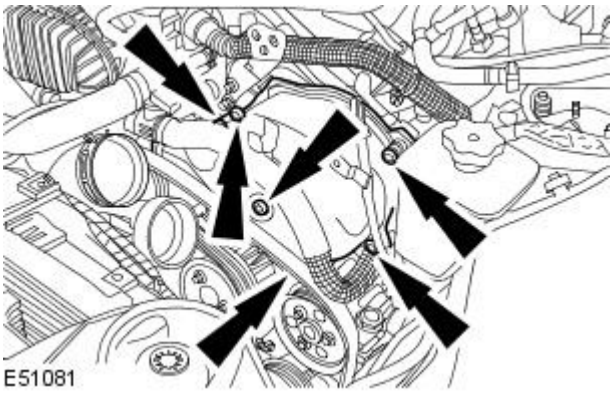


**12.** Remove the left-hand timing cover.

- Remove and discard the gaskets.

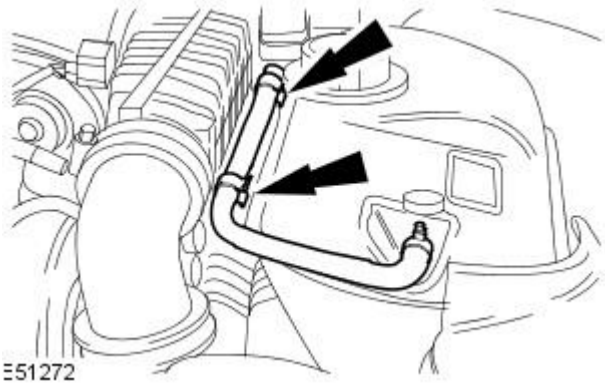


**13.** Detach the coolant hose.

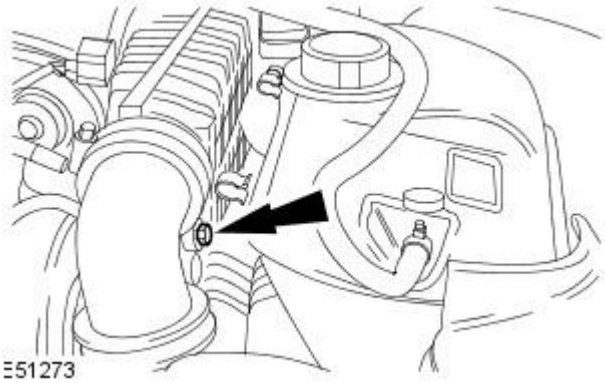


**14.** Remove the retaining bolt.

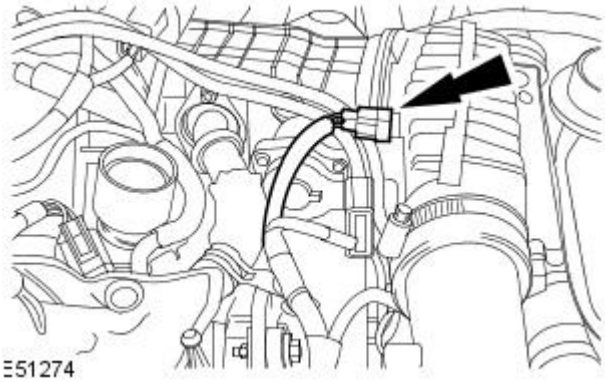


**15.** Disconnect the electrical connector.

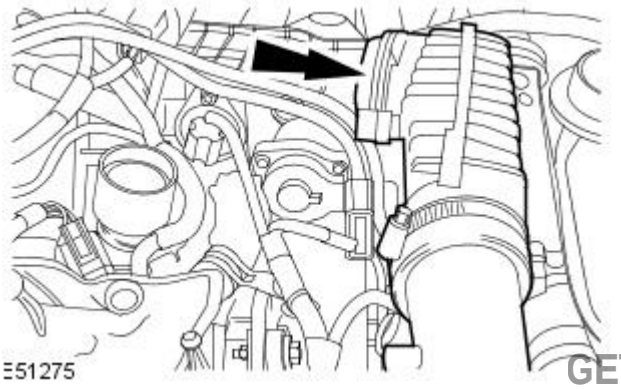


**16.** Remove the intake air shutoff throttle elbow.

- Release the retaining clip.

GETtheMANUALS.org

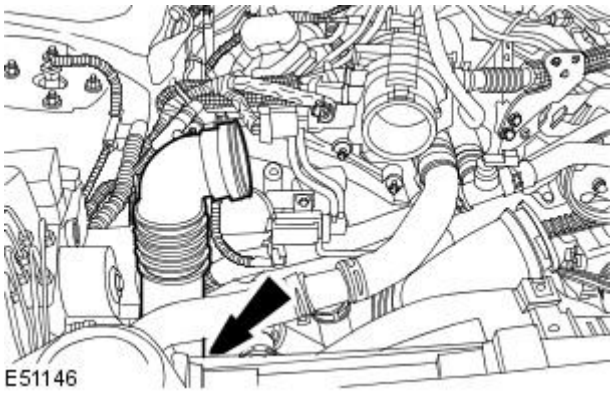


**17.** Remove the charge air cooler hose.

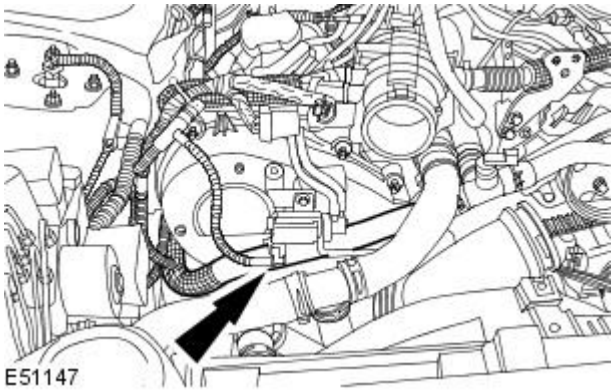


**18.** Detach the coolant hose.

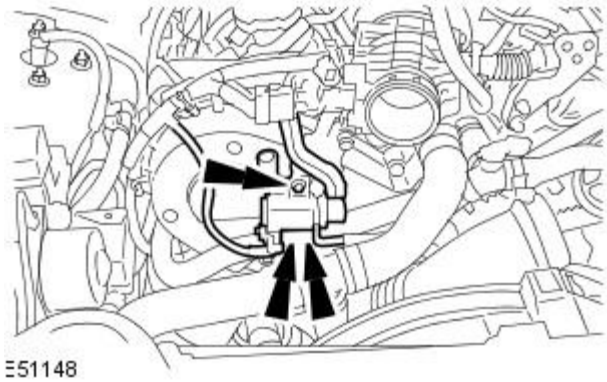


**19.** Detach the port deactivation valve retaining bracket.

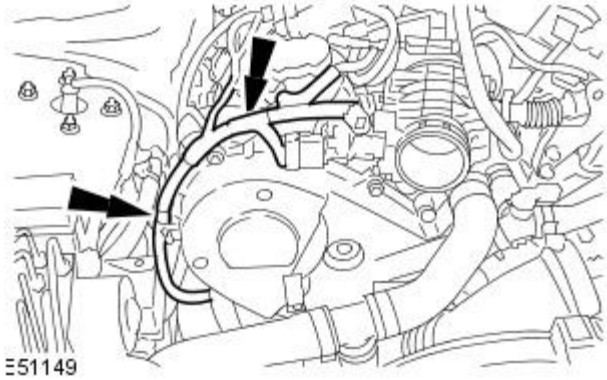


**20.** Detach the air temperature sensor wiring harness.

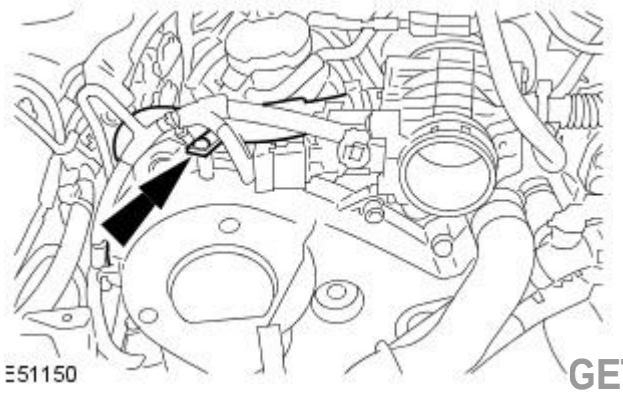


**21.** Detach the EGR valve tube.

- Remove the retaining bolt.

GETtheMANUALS.org

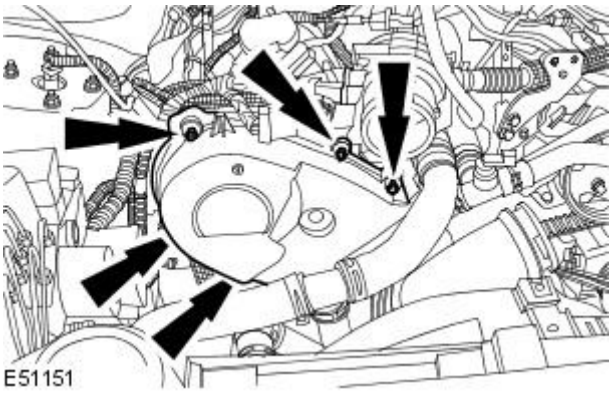


**22.** Remove the RH timing cover.

- Remove and discard the gaskets.

**23.** Remove the crankshaft vibration damper.
For additional information, refer to: Crankshaft Vibration Damper (303-01C Engine - 2.7L V6 - TdV6, In-vehicle Repair).

**24.** Detach the charge air cooler hose.

1. Remove the hose clamp.
2. Remove the retaining bolt.

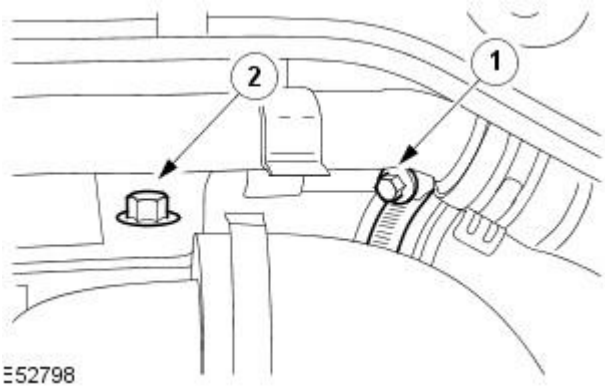


**25.** Lower the vehicle.

**26.** Remove the charge air cooler hose.

**27.** Detach the turbocharger inlet hose.

- Remove the retaining nut.

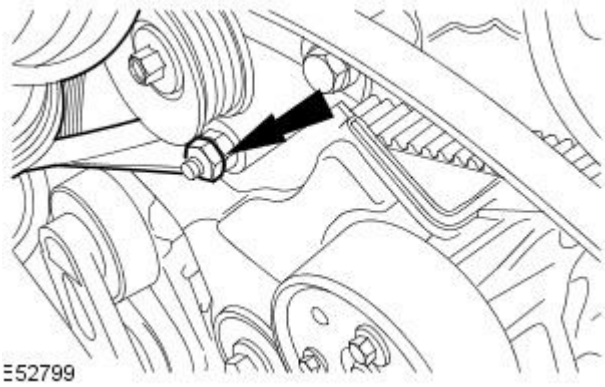


**28.** NOTE: Lock the water pump pulley with suitable 6 mm bar.

Remove the water pump pulley.

- Remove the retaining bolts.

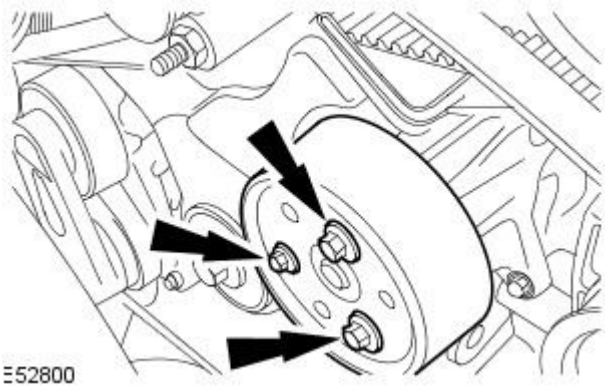


GETtheMANUALS.org

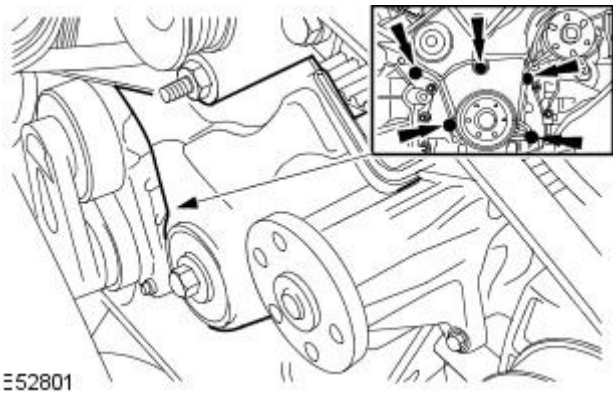


**29.** Remove the lower timing cover.

- Remove and discard the gaskets.

## Installation

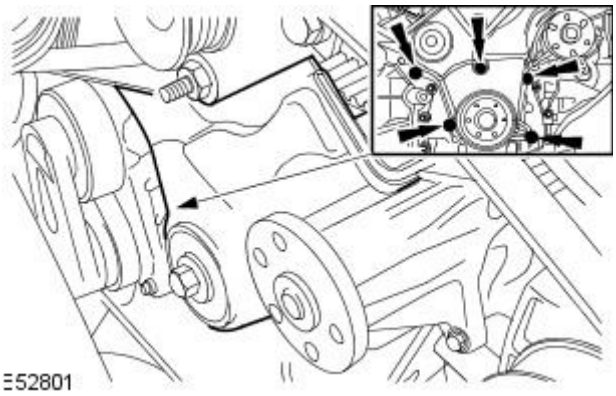


**1.** NOTE: Install a new gasket.

Install the lower timing cover.

- Tighten to 10 Nm.

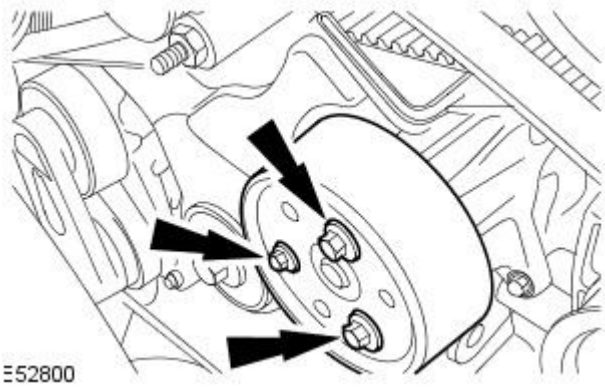


**2.** Install the water pump pulley.

- Tighten to 24 Nm.

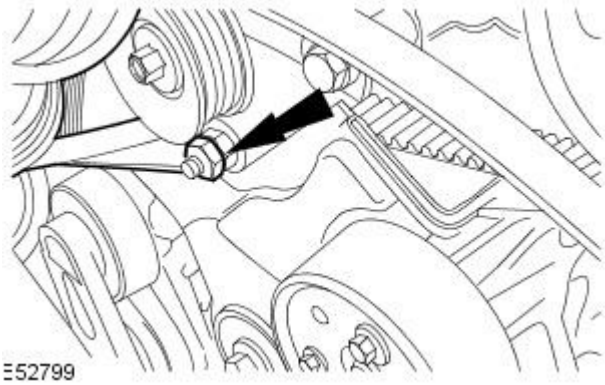


**3.** Attach the turbo charger inlet hose.

**4.** Attach the charge air cooler hose.

**5.** Raise the vehicle.

GETtheMANUALS.org

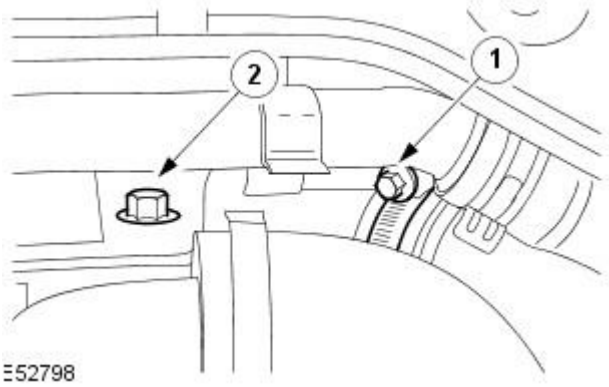


**6.** Attach the charge air cooler hose.

1. Tighten to 4 Nm.
2. Tighten to 8 Nm.

**7.** Install the crankshaft vibration damper.
For additional information, refer to: Crankshaft Vibration Damper (303-01C Engine - 2.7L V6 - TdV6, In-vehicle Repair).

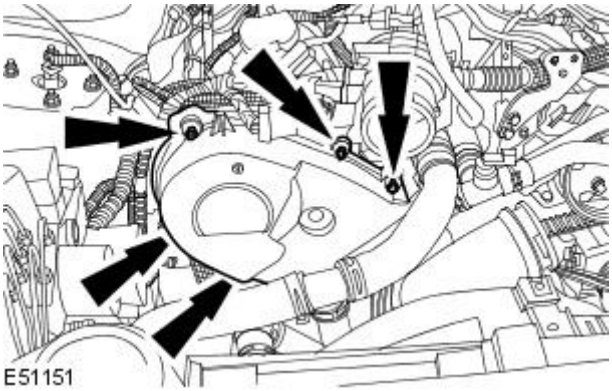


**8.** NOTE: Install a new gasket.

Install the RH timing cover.

- Tighten to 10 Nm.

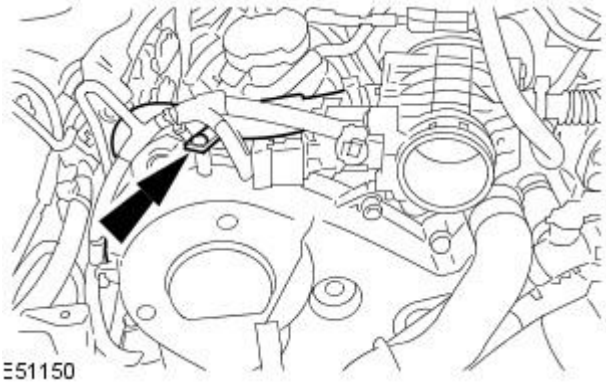


**9.** Attach the EGR valve tube.

- Tighten to 4 Nm.

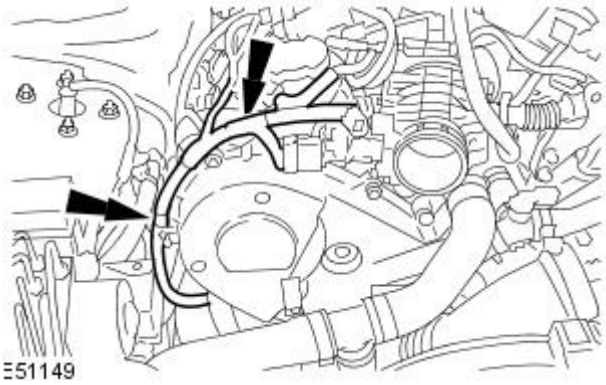


**10.** Attach the air temperature sensor wiring harness.

GETtheMANUALS.org

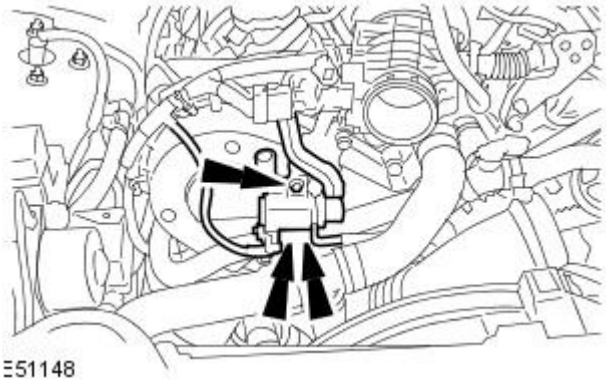


**11.** Attach the port deactivation valve retaining bracket.

- Tighten to 8 Nm.

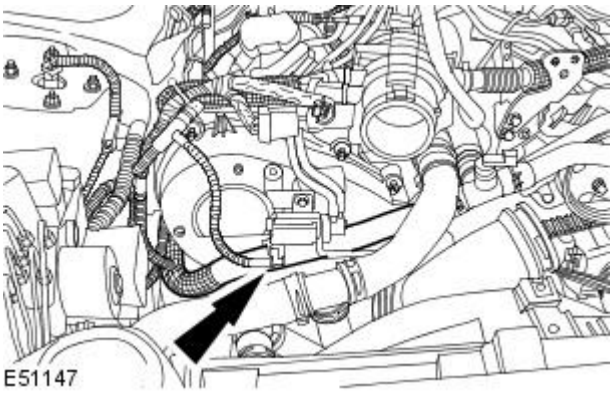


**12.** Attach the coolant hose.

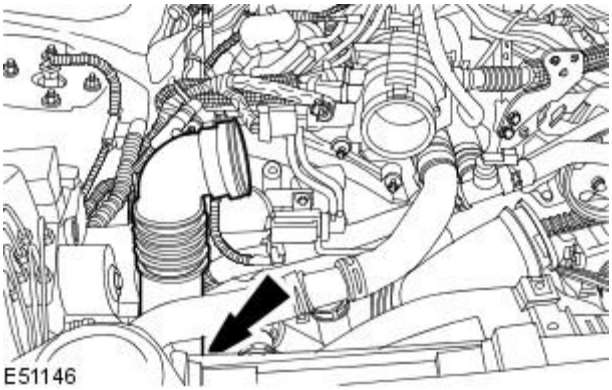


**13.** Install the charge air cooler hose.

- Tighten to 8 Nm.

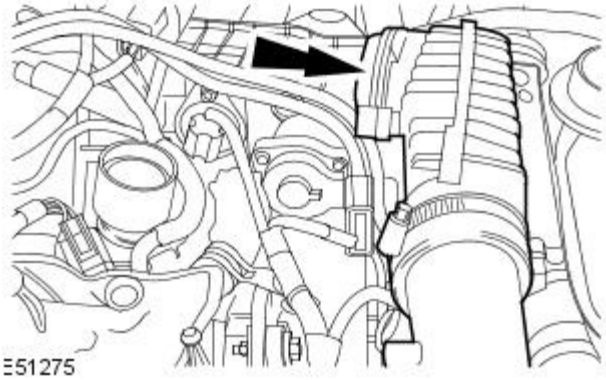


**14.** Install the intake air shutoff throttle elbow.

- Release the retaining clip.

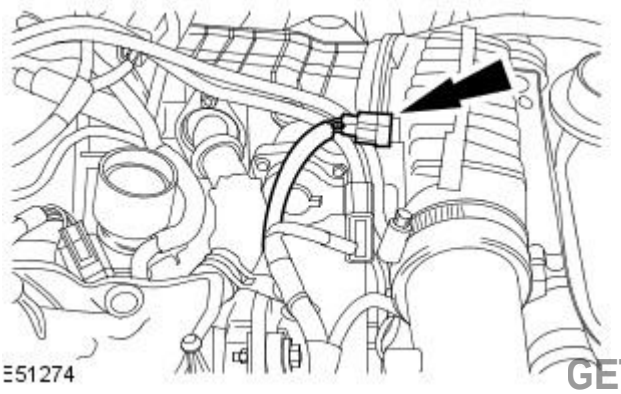


**15.** Connect the electrical connector.

GETtheMANUALS.org

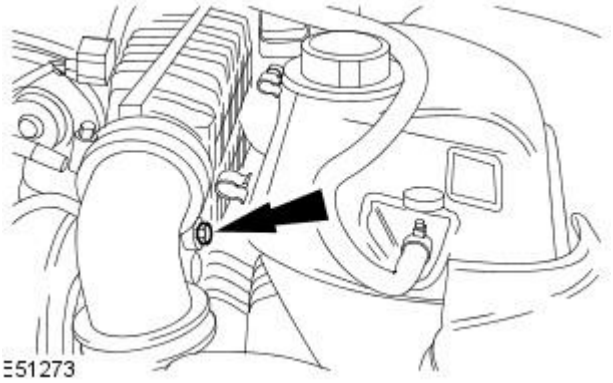


**16.** Install the retaining bolt.

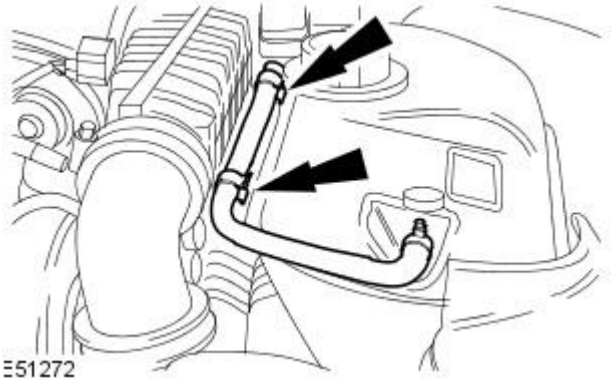


**17.** Attach the coolant hose.

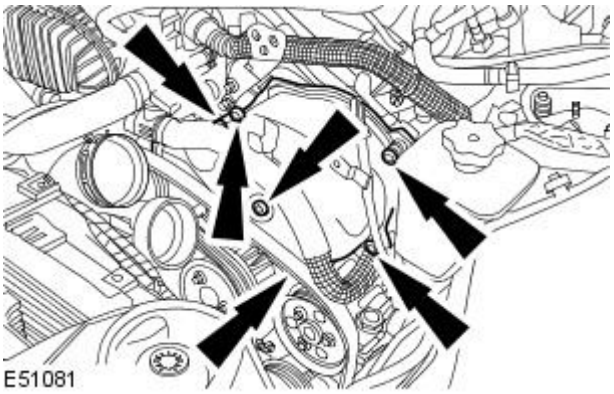


**18.** NOTE: Install a new gasket.

Install the LH timing cover.

- Tighten to 10 Nm.

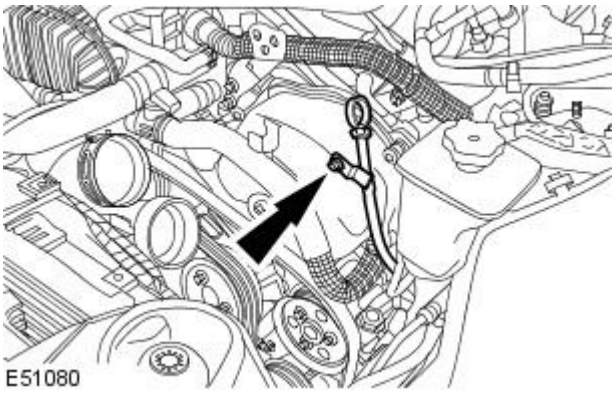


**19.** Attach the oil level indicator tube.

- Tighten to 3 Nm.

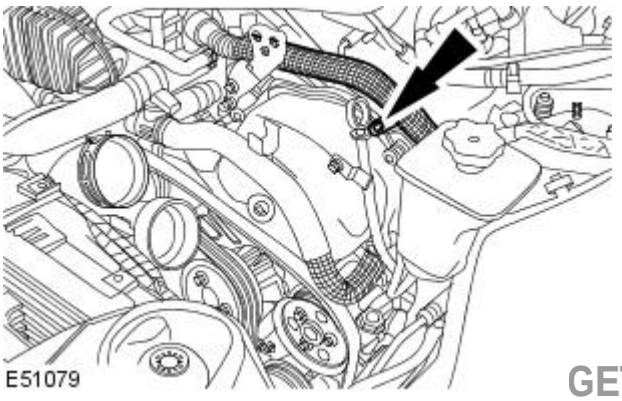


**20.** Attach the EGR valve tube.

- Tighten to 3 Nm.

GETtheMANUALS.org

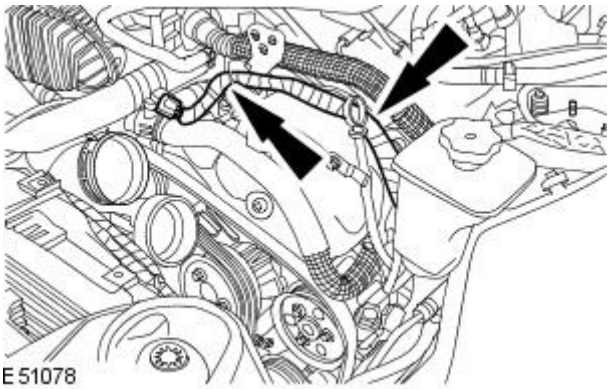


**21.** Attach the coolant temperature sensor wiring harness.

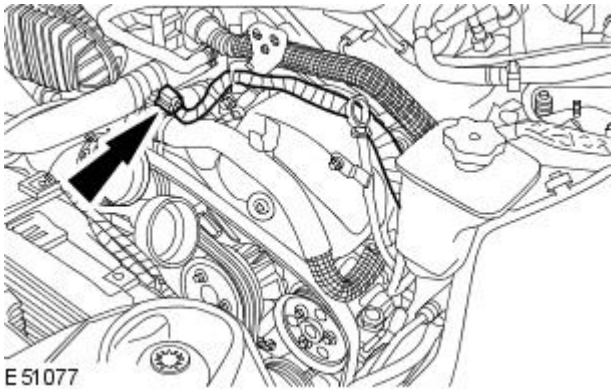


**22.** Connect the coolant temperature sensor.

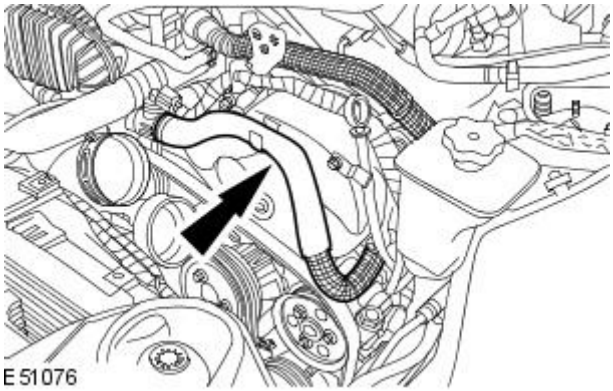


**23.** Attach the coolant hose.

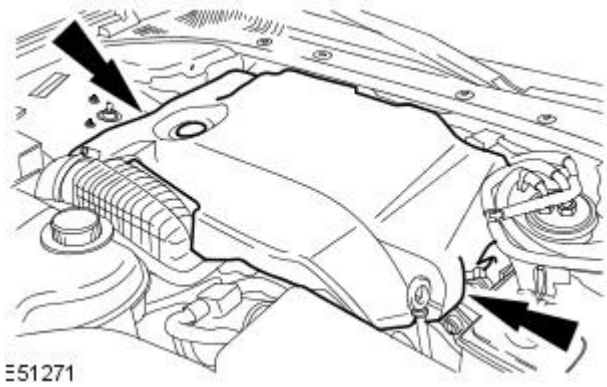


**24.** Install the engine cover.

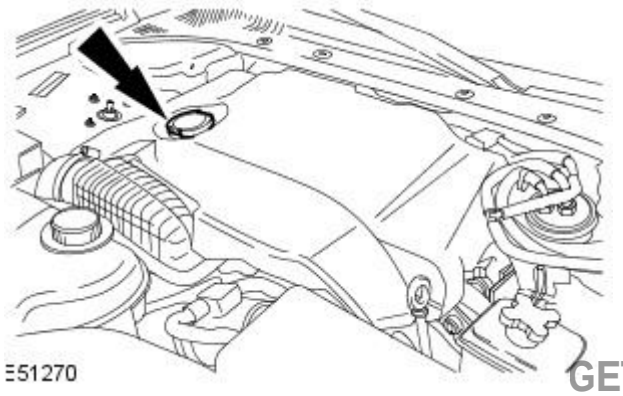


**25.** Install the oil filler cap.

GETtheMANUALS.org

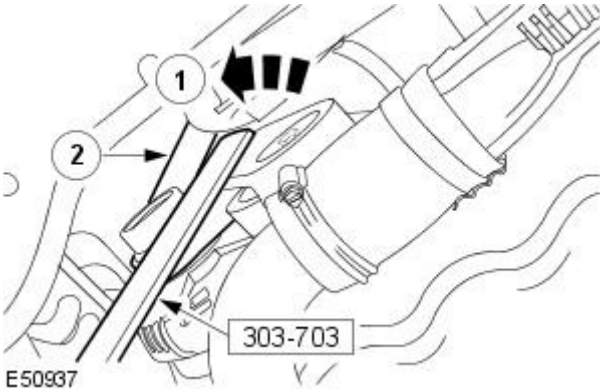


**26.** Install the air deflector.
For additional information, refer to: Air Deflector (501-02 Front End Body Panels, Removal and Installation).

**27.** Attach the accessory drive belt.

1. Using the special tool, rotate the accessory drive belt tensioner counter clockwise.
2. Install the accessory drive belt.

**28.** Lower the vehicle.

**29.** Install the air cleaner.
For additional information, refer to: Air Cleaner (303-12C Intake Air Distribution and Filtering - 2.7L V6 - TdV6, Removal and Installation).

GETtheMANUALS.org

# Engine - 2.7L V6 - TdV6 - Valve Cover

In-vehicle Repair

| Special Tool(s) | |
|---|---|
| 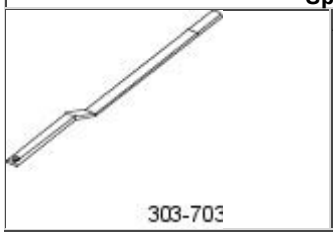  | Accessory Belt Detensioner<br><br>303-703 |

**General Equipment**

| |
|---|
| Pneumatic vacuum gun |

## Removal

Valve Cover LH and RH

**1.** WARNINGS:

Wait at least 30 seconds after the engine stops before commencing any repair to the high pressure fuel injection system. Failure to follow this instruction may result in personal injury.

Do not smoke or carry lighted tobacco or open flame of any type when working on or near any fuel related components. Highly flammable mixtures are always present and may ignite. Failure to follow these instructions may result in personal injury.

This procedure involves fuel handling. Be prepared for fuel spillage at all times and always observe fuel handling precautions. Failure to follow this instruction may result in personal injury.

Do not carry out any repairs to the fuel injection system with the engine running. The fuel pressure within the system can be as high as 1650 bar. Failure to follow this instruction may result in personal injury.

• CAUTIONS:

Make sure the workshop area in which the vehicle is being worked on is as clean and as dust free as possible. Foreign matter from work on clutches, brakes or from machining or welding operations can contaminate the fuel system and may result in later malfunction.

Always carry out the cleaning process before carrying out any repairs to the fuel injection system components. Failure to follow this instruction may result in foreign matter ingress to the fuel injection system.

Diesel fuel injection equipment is manufactured to very precise tolerances and fine clearances. It is therefore essential that absolute cleanliness is observed when working with these components. Always install blanking plugs to any open orifices or lines.

Remove the intake air shut off throttle.
For additional information, refer to: Intake Air Shutoff Throttle (303-04C Fuel Charging and Controls - 2.7L V6 - TdV6, Removal and Installation).

**2.** Remove the air cleaner.
For additional information, refer to: Air Cleaner (303-12C Intake Air Distribution and Filtering - 2.7L V6 - TdV6, Removal and Installation).

**3.** Remove the air deflector.
For additional information, refer to: Air Deflector (501-02 Front End Body Panels, Removal and Installation).

Valve Cover LH

GETtheMANUALS.org

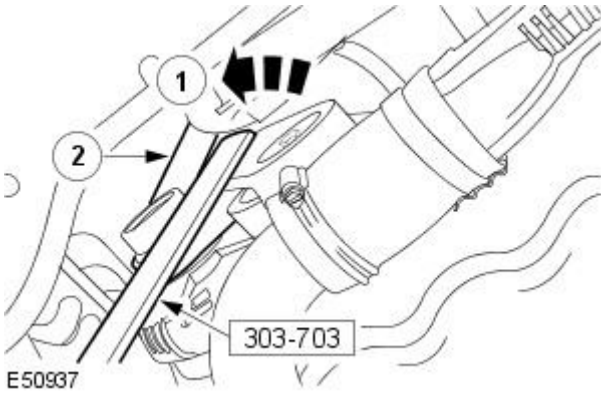


**4.** Detach the accessory drive belt.

1. Using the special tool, rotate the accessory drive belt tensioner counter clockwise.
2. Detach the accessory drive belt.

**5.** Lower the vehicle.

**6.** Detach the engine coolant hose.

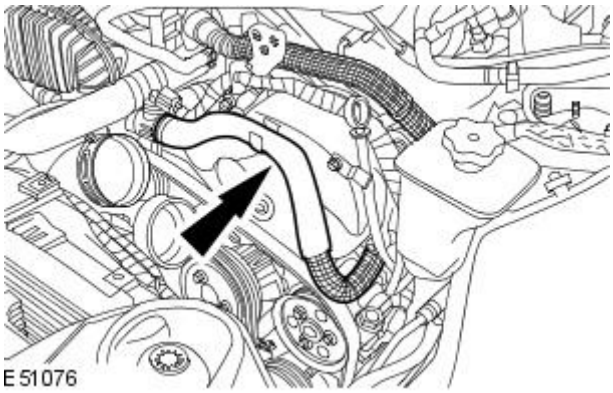


**7.** Disconnect the electrical connector.

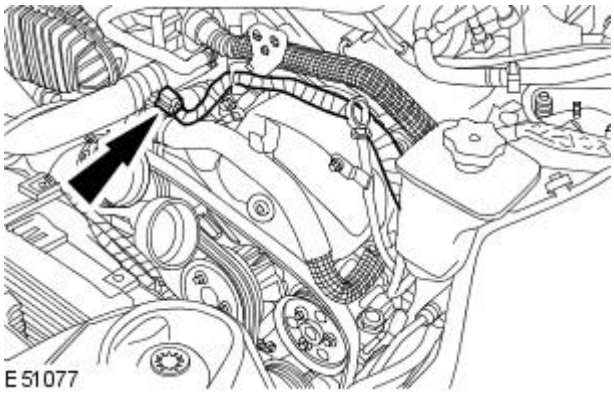


**8.** Detach the engine harness.

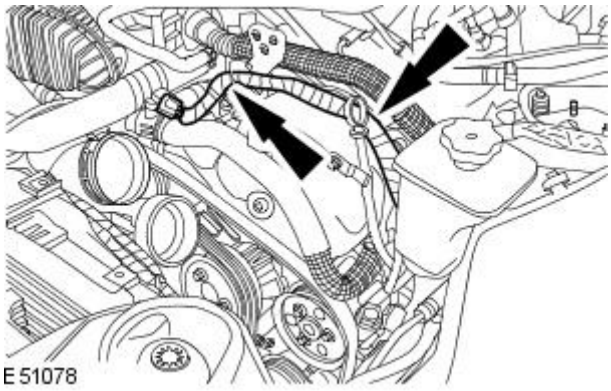


Valve Cover LH and RH

GETtheMANUALS.org

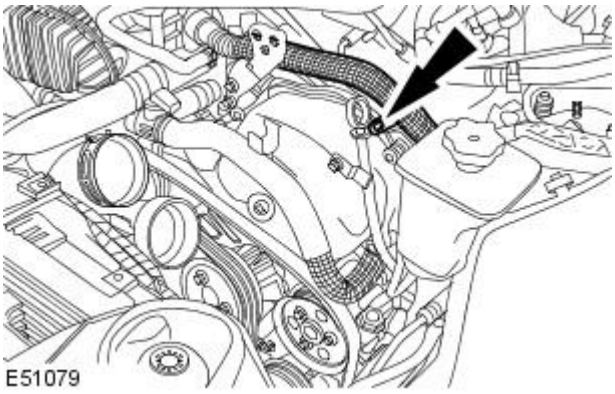


**9.** Remove the exhaust gas recirculation outlet tube retaining bolt.

Valve Cover LH

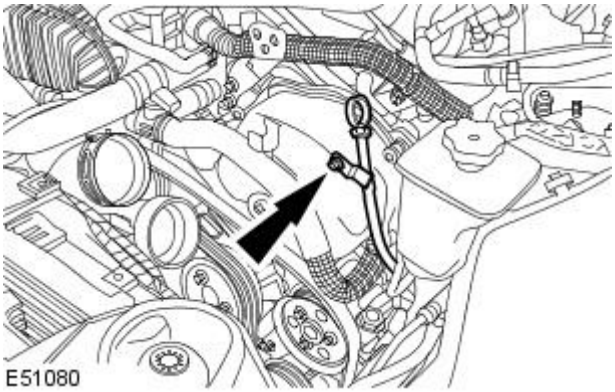


**10.** Remove the oil level indicator retaining bolt.

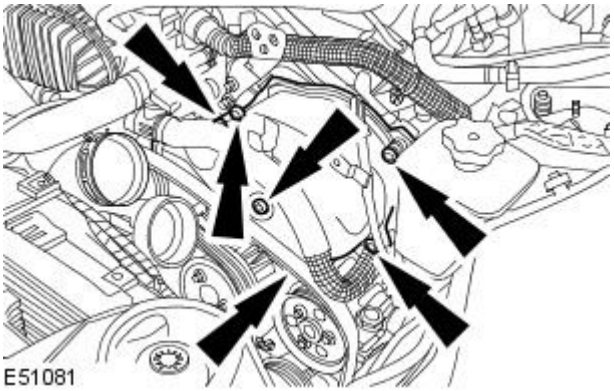


**11.** Remove the timing belt cover.

Valve Cover LH and RH

**12.** Remove the fuel injectors.
For additional information, refer to: Fuel Injector (303-04C Fuel Charging and Controls - 2.7L V6 - TdV6, Removal and Installation).

**13.** Remove the intake air shut off throttle.
For additional information, refer to: Intake Air Shutoff Throttle (303-04C Fuel Charging and Controls - 2.7L V6 - TdV6, Removal and Installation).

**14.** Detach the electrical connector from the valve cover.

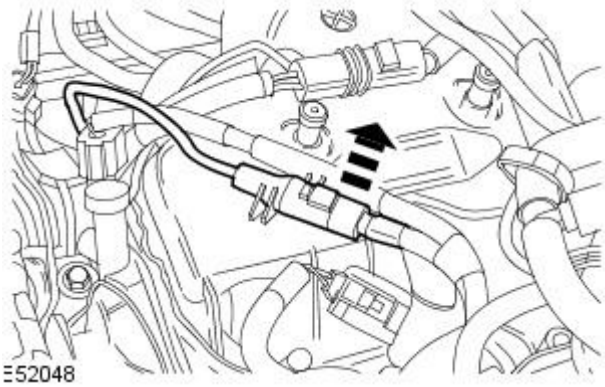


GETtheMANUALS.org

**15.** Disconnect the electrical connector.

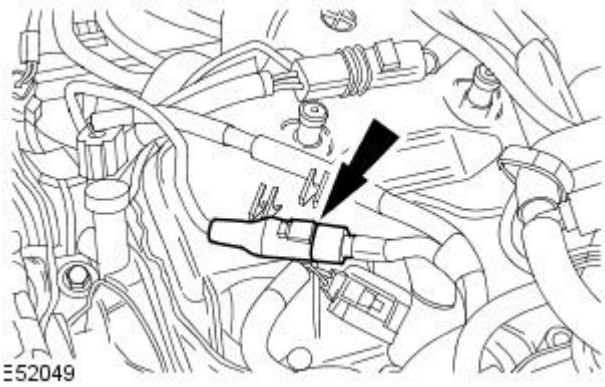


Valve Cover RH

**16.** Detach the timing cover retaining bolt.

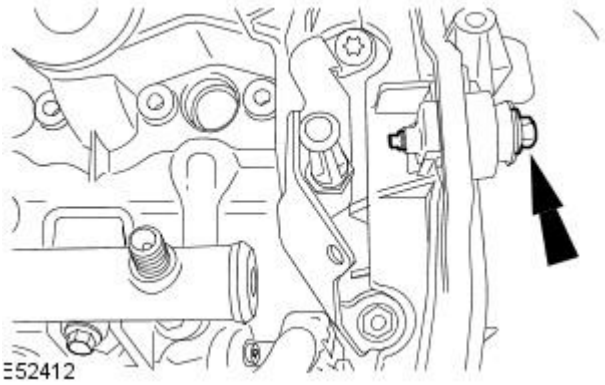


Valve Cover LH

**17.** Disconnect the electrical connector.

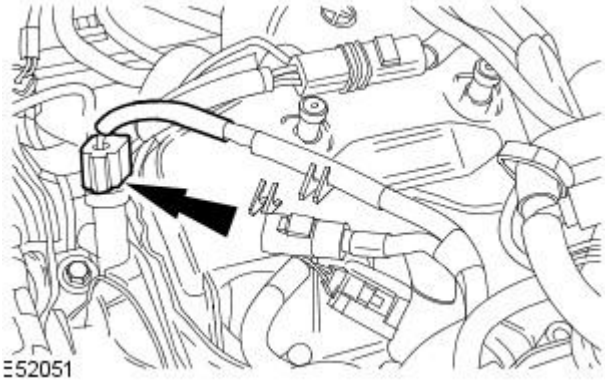


Valve Cover LH and RH

**18.** Detach the engine harness.

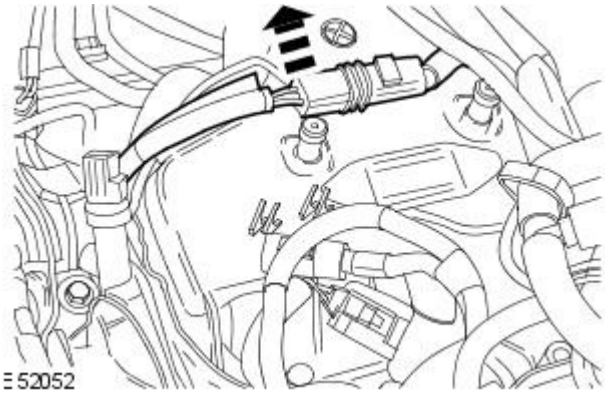


GETtheMANUALS.org

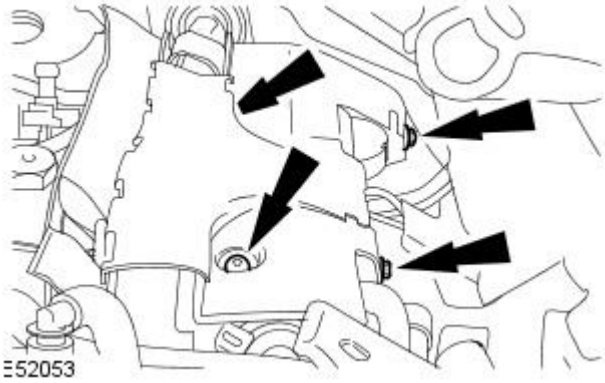


**19.** Remove the engine harness retaining bolts.

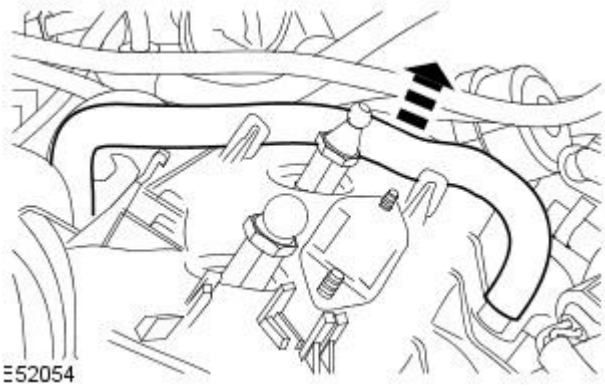


**20.** Detach the engine breather pipe.

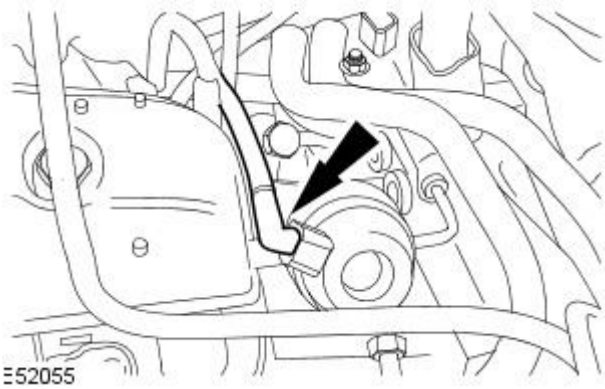


**21.** Disconnect the vacuum pipe.

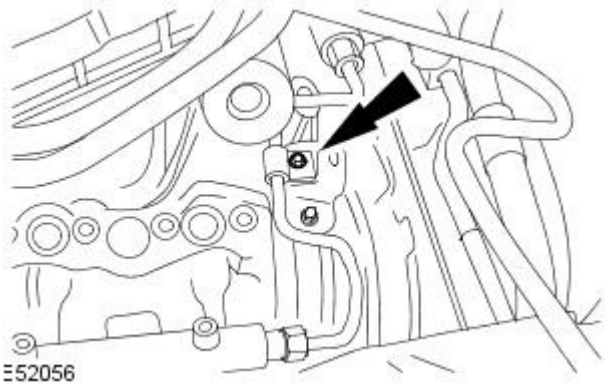


**22.** Remove the fuel injection pump supply line retaining bolt.

**23.** Clean the fuel pump, high pressure fuel supply line and surrounding areas.
For additional information, refer to: Fuel Injection Component Cleaning (303-04C Fuel Charging and Controls - 2.7L V6 - TdV6, General Procedures).

GETtheMANUALS.org

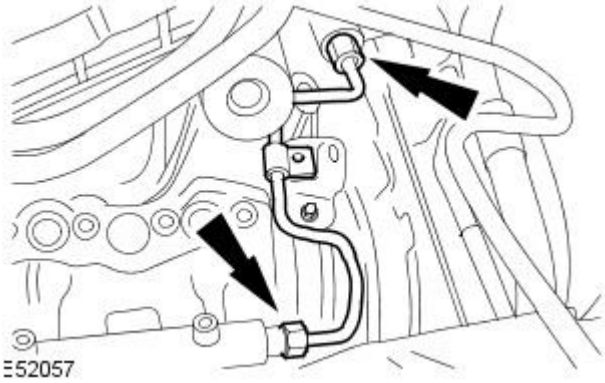


**24.** CAUTIONS:

Make sure that the high pressure fuel supply line remains in contact with both the fuel pump and the fuel injection supply manifold until both unions have been detached and cleaned. Failure to follow this instruction may result in foreign matter ingress to the fuel injection system.

While maintaining the pressure on the high pressure fuel supply line, clean and vacuum foreign material from the line and unions.

Remove the high pressure fuel supply line.

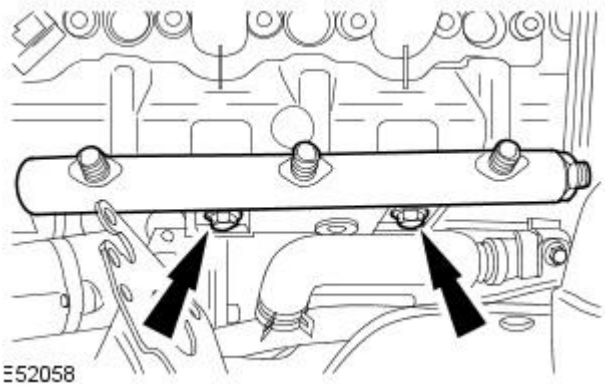


**25.** Remove the fuel injection supply manifold.

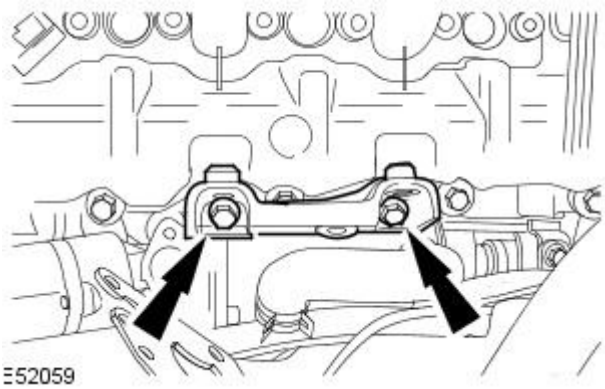


**26.** Remove the fuel injection supply manifold securing bracket .

Valve Cover LH

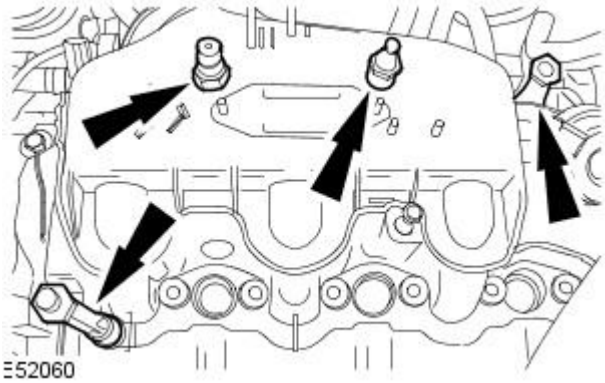


**27.** Remove the engine cover and wiring harness retainers.

Valve Cover RH

GETtheMANUALS.org

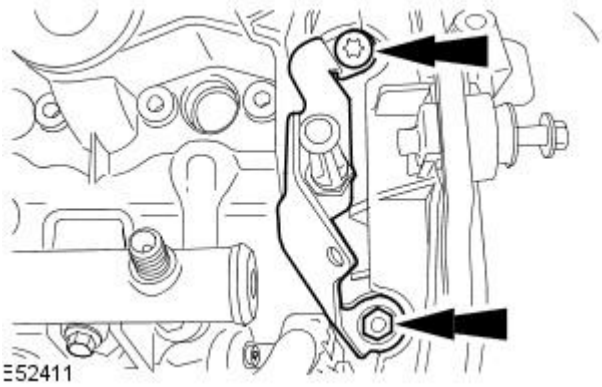


**28.** Remove the engine cover retainer.

Valve Cover LH and RH

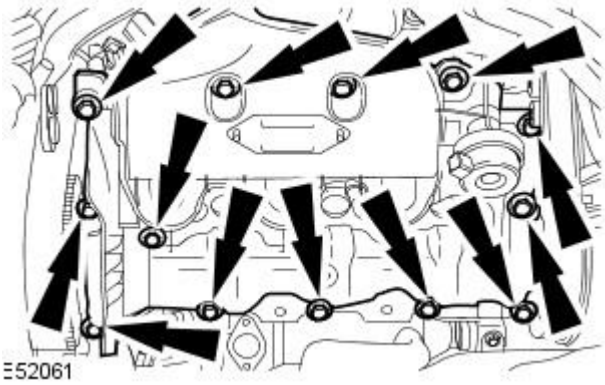


**29.** Remove the valve cover.

- Remove and discard the valve cover gasket.

## Installation

Valve Cover LH and RH

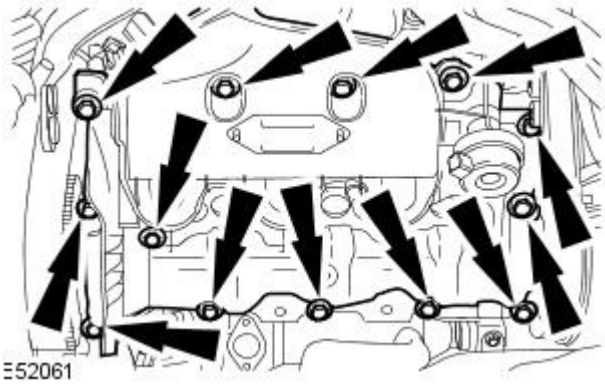


**1.** WARNINGS:

Wait at least 30 seconds after the engine stops before commencing any repair to the high pressure fuel injection system. Failure to follow this instruction may result in personal injury.

Do not smoke or carry lighted tobacco or open flame of any type when working on or near any fuel related components. Highly flammable mixtures are always present and may ignite. Failure to follow these instructions may result in personal injury.

This procedure involves fuel handling. Be prepared for fuel spillage at all times and always observe fuel handling precautions. Failure to follow this instruction may result in personal injury.

Do not carry out any repairs to the fuel injection system with the engine running. The fuel pressure within the system can be as high as 1650 bar. Failure to follow this instruction may result in personal injury.

• CAUTIONS:

Make sure the workshop area in which the vehicle is being worked on is as clean and as dust free as possible. Foreign matter from work on clutches, brakes or from machining or welding operations can contaminate the fuel system and may result in later malfunction.

Always carry out the cleaning process before carrying out any repairs to the fuel injection system components. Failure to follow this instruction may result in foreign matter ingress to the fuel injection system.

Diesel fuel injection equipment is manufactured to very precise tolerances and fine clearances. It is therefore essential that absolute cleanliness is observed when working with these components. Always install blanking plugs to any open orifices or lines.

To install, reverse the removal procedure.

- Tighten to 10 Nm.

GETtheMANUALS.org

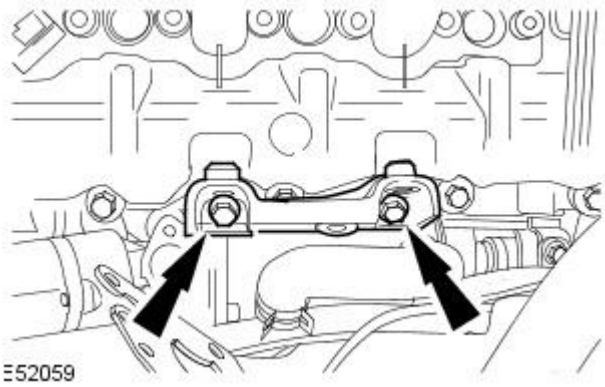


**2.** Tighten to 24 Nm.

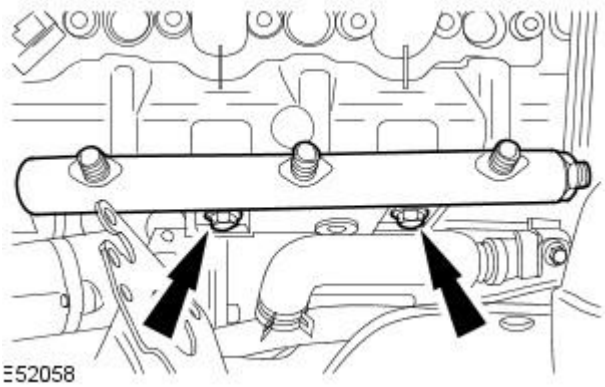


**3.** Tighten to 24 Nm.

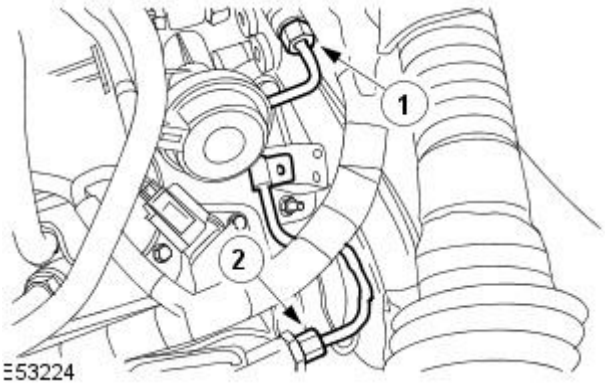


**4.** NOTE: Left-hand shown, right-hand similar.

Install new high pressure fuel supply lines.

- Remove and discard the blanking caps.
- Tighten the high-pressure fuel supply line in the sequence shown in four stages:
  1. Stage 1: Tighten the high-pressure fuel supply line union 1 to 15 Nm.
  2. Stage 2: Tighten the high-pressure fuel supply line union 2 to 15 Nm.
  3. Stage 3: Tighten the high-pressure fuel supply line union 1 to 30 Nm.
  4. Stage 4: Tighten the high-pressure fuel supply line union 2 to 30 Nm.

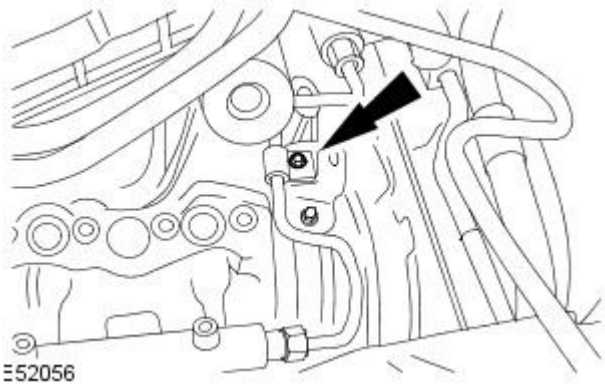


**5.** Tighten to 10 Nm.

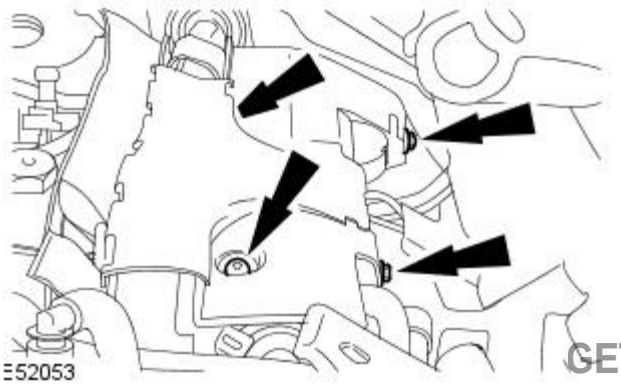


**6.** Tighten to 4 Nm.

GETtheMANUALS.org

Valve Cover RH

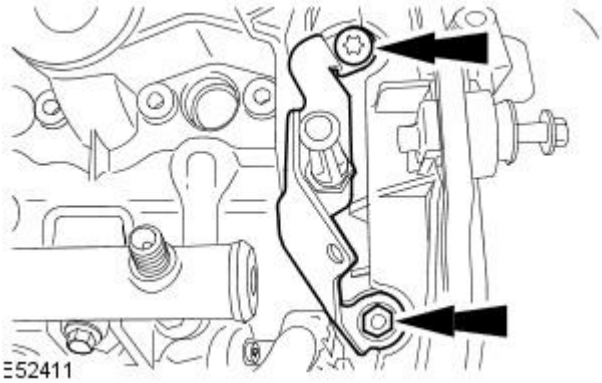


**7.** Tighten to 4 Nm.

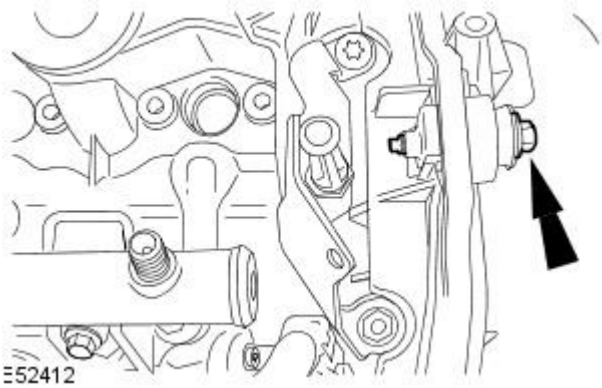


**8.** Tighten to 10 Nm.

Valve Cover LH

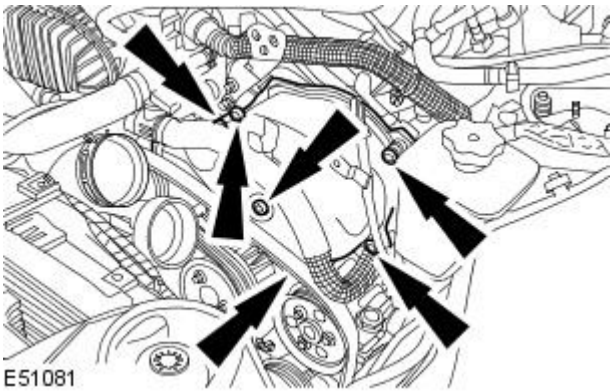


**9.** Tighten to 3 Nm.

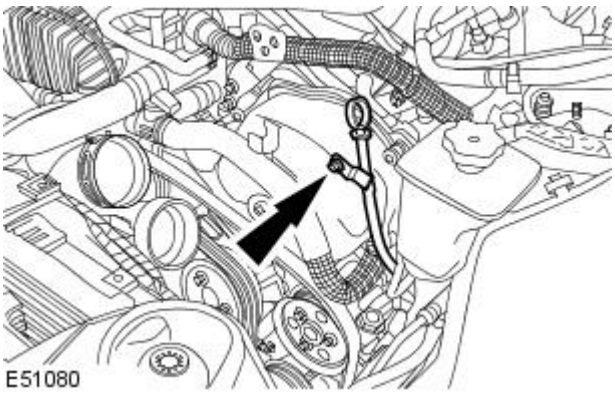


**10.** Tighten to 3 Nm.

Valve Cover LH and RH

GETtheMANUALS.org

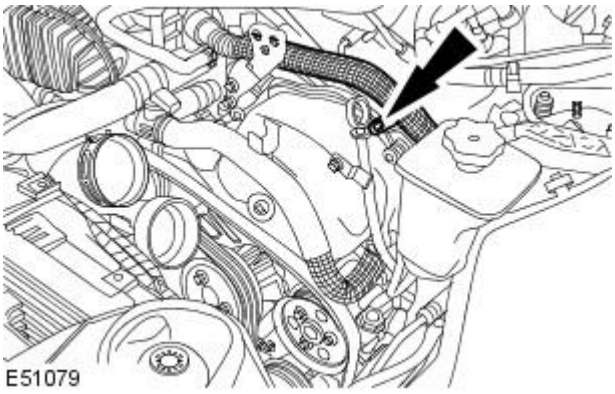


**11.** Tighten to 3 Nm.

GETtheMANUALS.org

# Engine - 2.7L V6 - TdV6 - Engine

Removal

| Special Tool(s) | |
|---|---|
| E52720 | Engine Lifting Brackets<br><br>303-1129 |
| 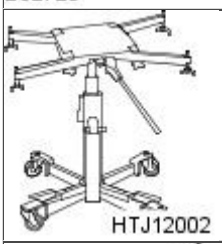 HTJ12002 | Powertrain Assembly Jack<br><br>HTJ1200-02 |
| 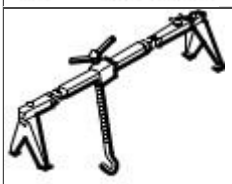 303-021 | Engine Support Bracket<br><br>303-021 |

## Removal

All Vehicles

1. Drain the cooling system.
   For additional information, refer to: Cooling System Draining, Filling and Bleeding (303-03C Engine Cooling - 2.7L V6 - TdV6, General Procedures).
2. Remove the cooling fan motor and shroud.
   For additional information, refer to: Cooling Fan Motor and Shroud (303-03C Engine Cooling - 2.7L V6 - TdV6, Removal and Installation).

Vehicles with automatic transmission

3. Remove the transmission assembly.
   For additional information, refer to: Transmission - 2.7L V6 - TdV6 (307-01 Automatic Transmission/Transaxle, Removal).

Vehicles with manual transmission

4. Remove the transmission assembly.
   For additional information, refer to: Transmission (308-03B Manual Transmission/Transaxle - Vehicles With: S6-53 6-Speed Manual Transmission, Removal).

All vehicles

5. Recover the air conditioning refrigerant.
   For additional information, refer to: Air Conditioning (A/C) System Recovery, Evacuation and Charging (412-00 Climate Control System - General Information, General Procedures).
6. Detach the radiator top hose.

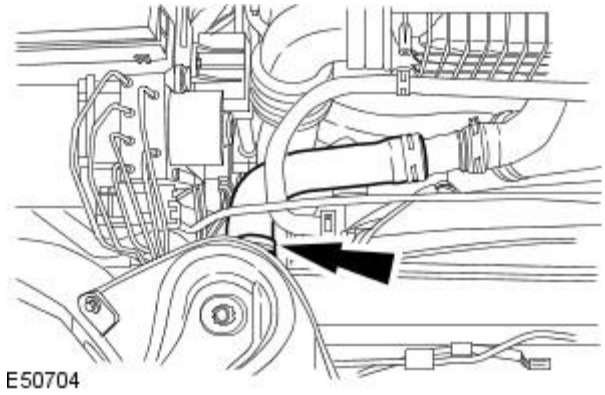
E50704

Vehicles with automatic transmission

GETtheMANUALS.org

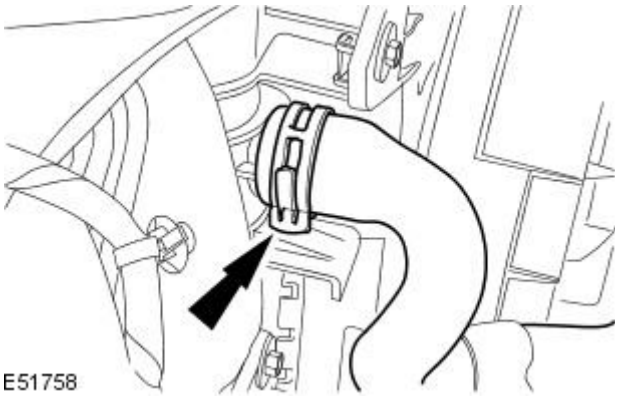


**7.** Detach the radiator hose.

All vehicles

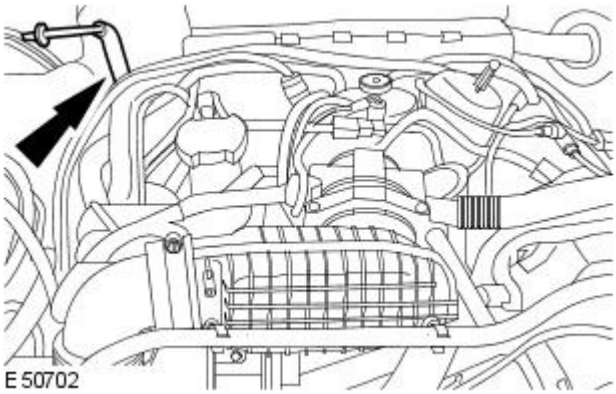


**8.** Detach the brake booster vacuum pipe.

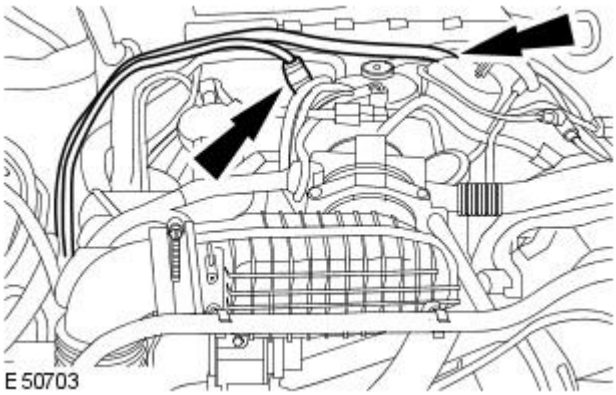


**9.** Disconnect the glow plug harness electrical connectors.

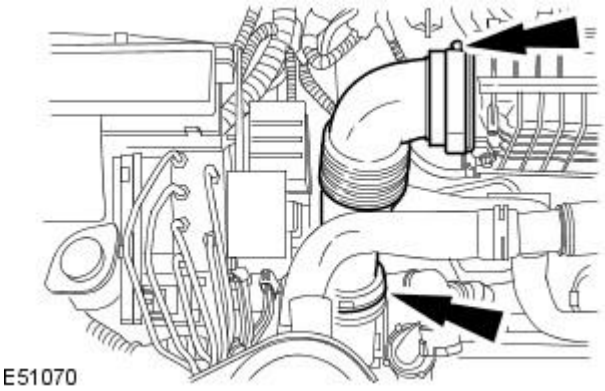


**10.** Remove the air intake hose.

**11.** Remove the cabin air filter.
For additional information, refer to: Cabin Air Filter (412-01 Air Distribution and Filtering, Removal and Installation).

GETtheMANUALS.org

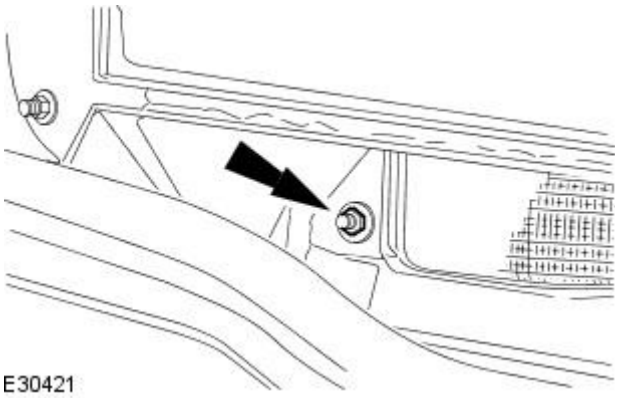


**12.** Remove the cabin air filter housing retaining nut.

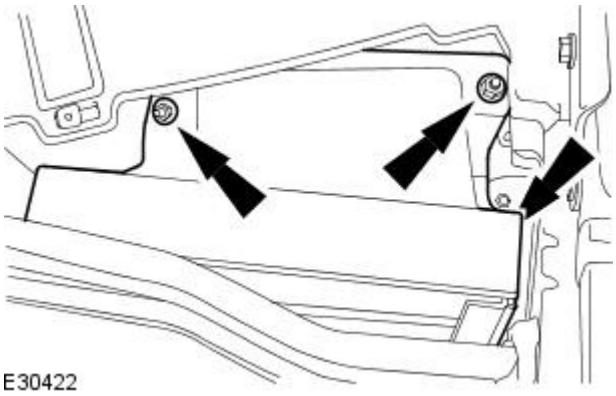


**13.** Remove the cabin air filter housing.

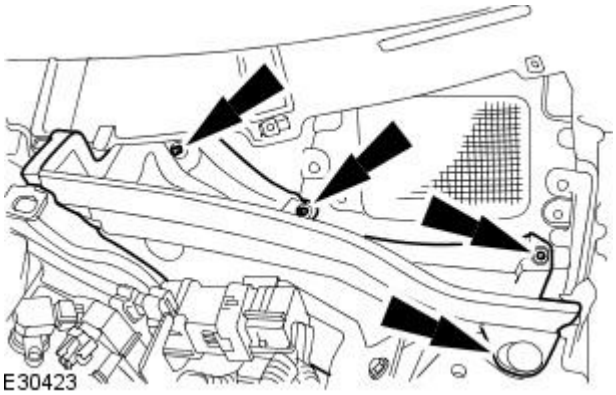


**14.** Remove the engine compartment panel.

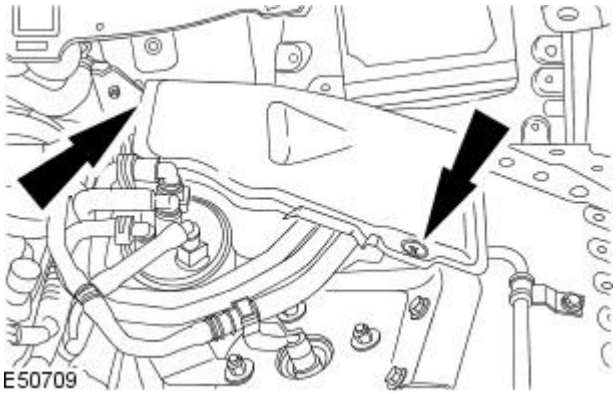


**15.** Remove the left hand engine compartment trim panel.

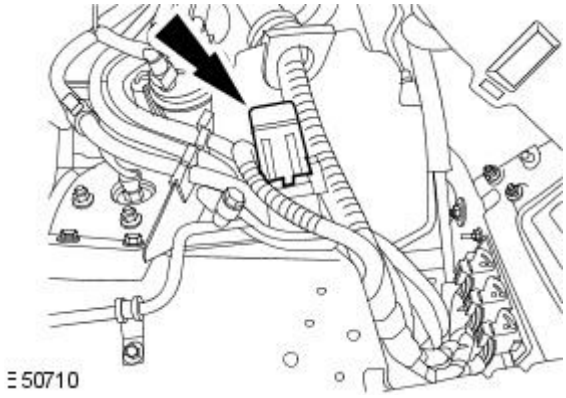


**16.** Disconnect the engine wiring harness electrical connector.

GETtheMANUALS.org

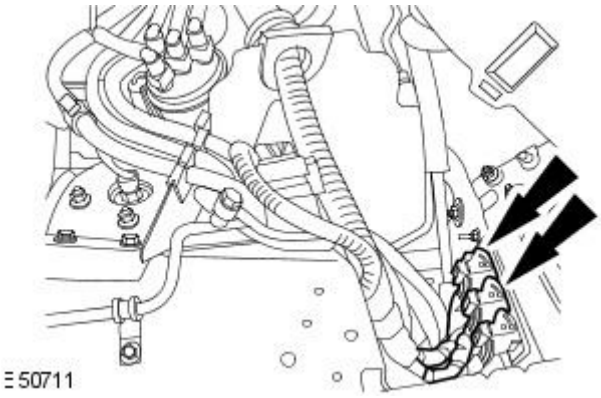


**17.** Disconnect the engine control module (ECM) electrical connectors.

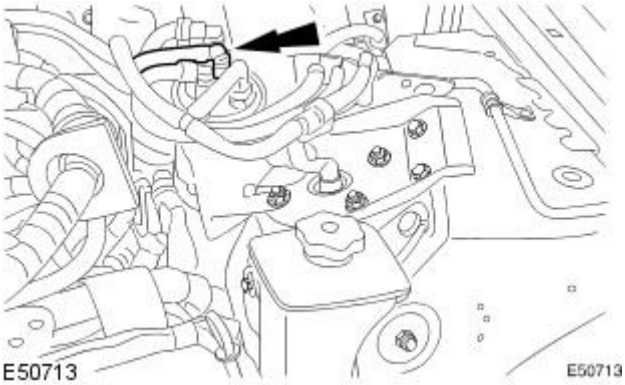


**18.** NOTE: Cap the exposed ports.

Disconnect the fuel filter feed hose.

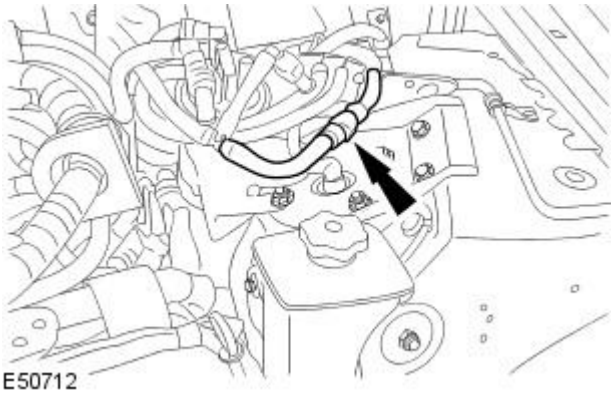


**19.** NOTE: Cap the exposed ports.

Disconnect the fuel filter return hose.

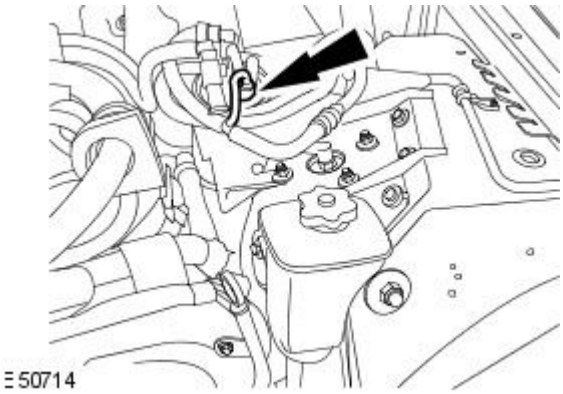


**20.** NOTE: Cap the exposed ports.

Disconnect the fuel filter return hose.

**21.** Remove the power steering fluid reservoir.
For additional information, refer to: Power Steering Fluid Reservoir (211-02 Power Steering, Removal and Installation).

GETtheMANUALS.org

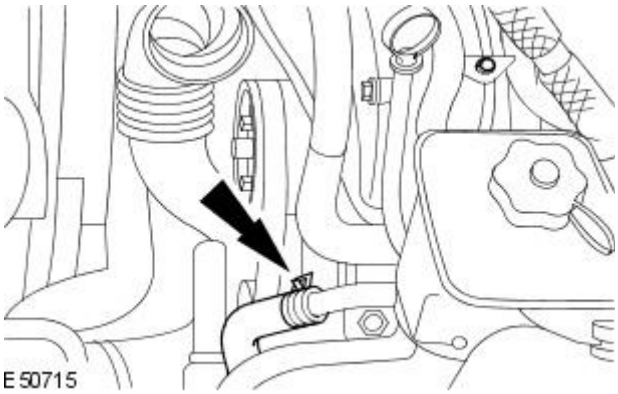


**22.** Disconnect the coolant hose.

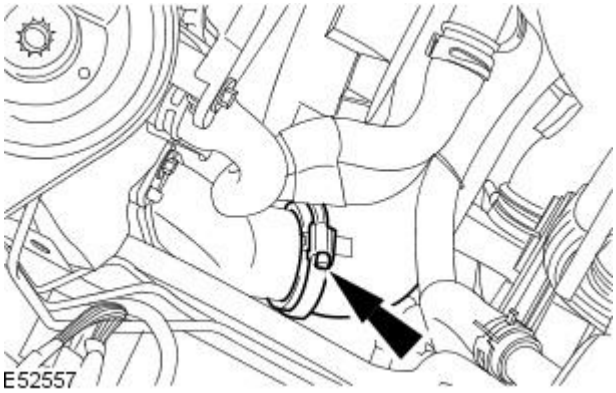


**23.** Disconnect the charge air cooler hose.

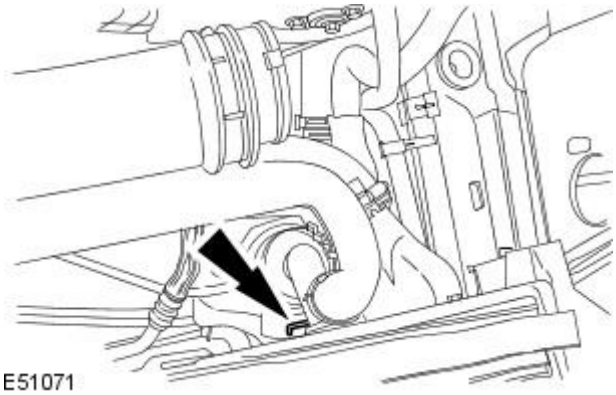


**24.** Detach the thermostat housing.

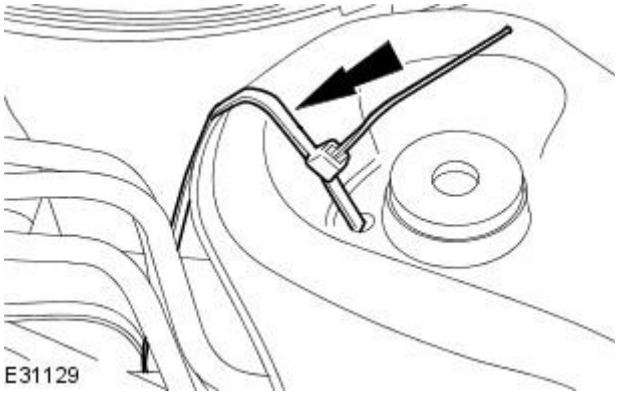


**25.** NOTE: Right-hand shown, left-hand similar.

Support the radiator.

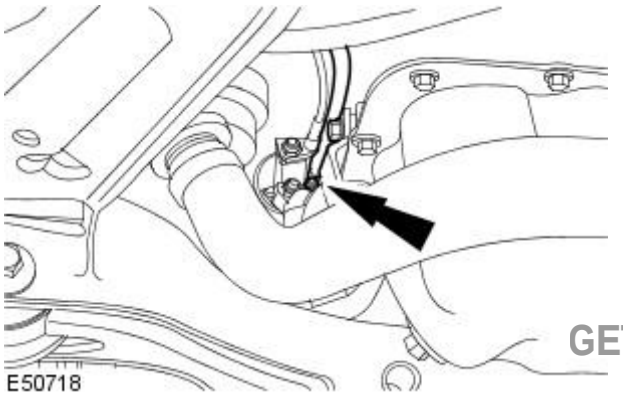


**26.** Raise the vehicle.

**27.** Detach the starter motor wiring harness.

GETtheMANUALS.org

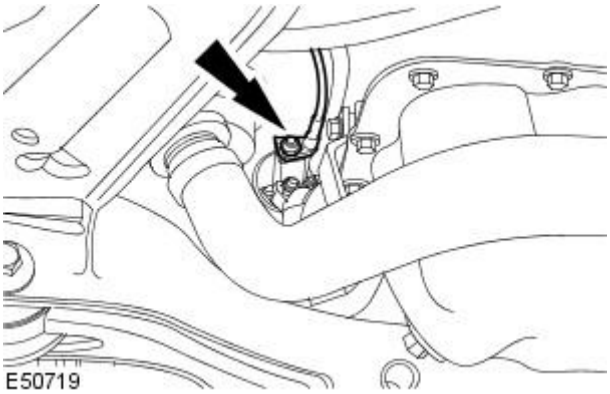


**28.** Detach the starter motor wiring harness.

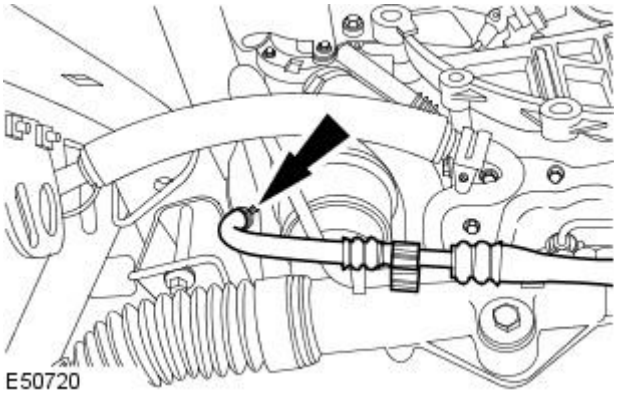


**29.** Detach the power steering hose.

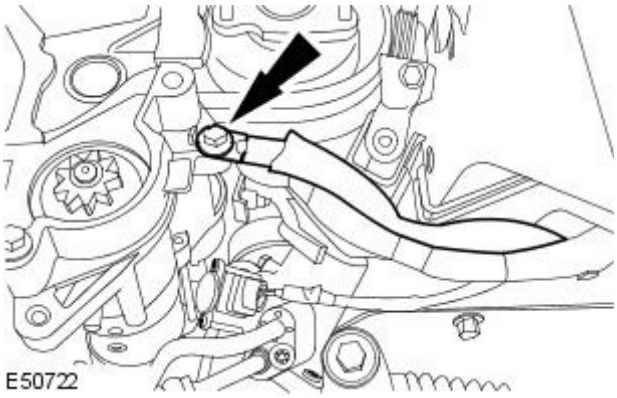


**30.** Detach the earth cable.

**31.** Make sure the alignment mark on the steering gear pinion seal protection cover is central to the steering gear pinion casting.

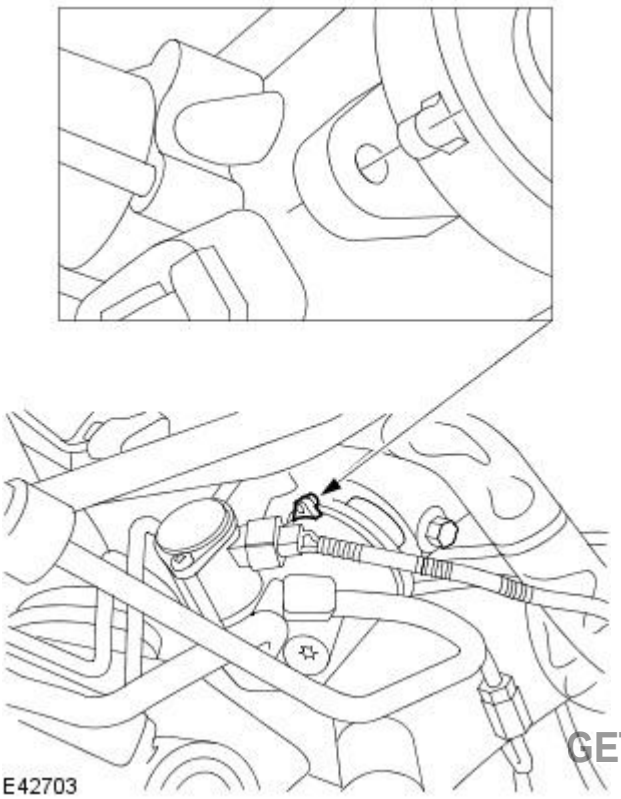


GETtheMANUALS.org

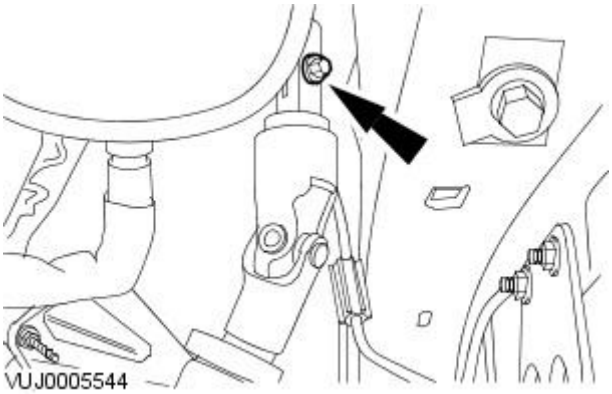


**32.** Loosen the lower steering column pinch bolt.

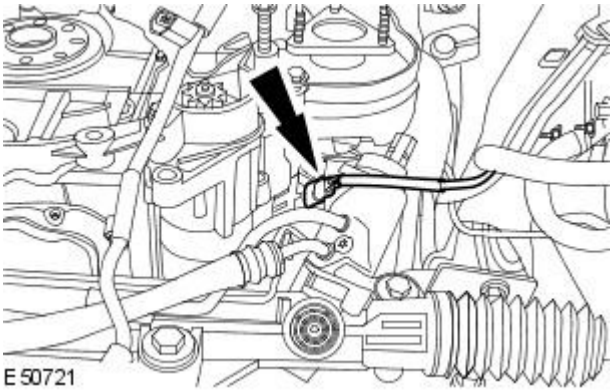


**33.** Disconnect the power steering control valve actuator electrical connector.

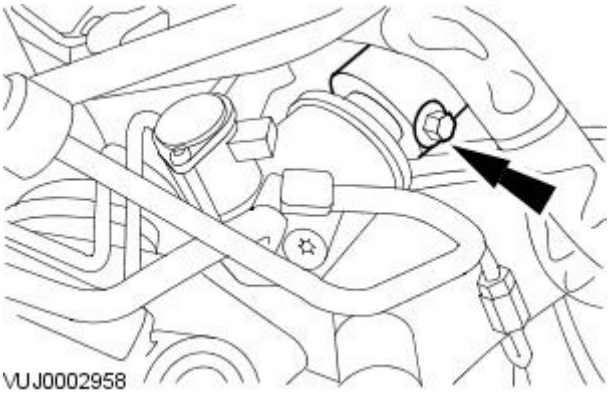


**34.** Detach the lower steering column.

- Remove the steering gear shaft pinch bolt.

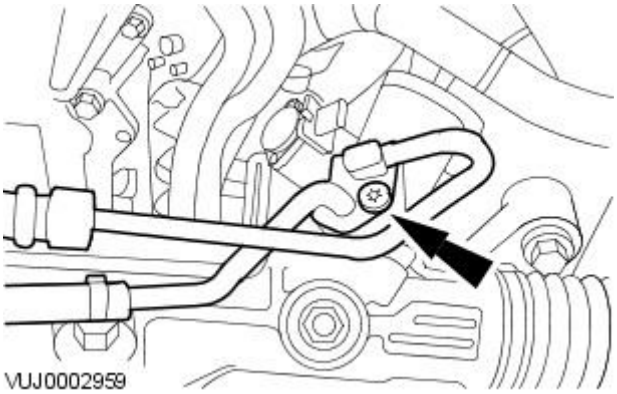


**35.** CAUTIONS:

Cap the power steering lines to prevent loss of fluid and dirt ingress.

If power steering fluid comes into contact with the paintwork, the affected area must be immediately washed down with cold water.

• NOTE: Drain the fluid into a suitable container.

Disconnect the power steering supply and return lines.

- Remove and discard the O-ring seals.

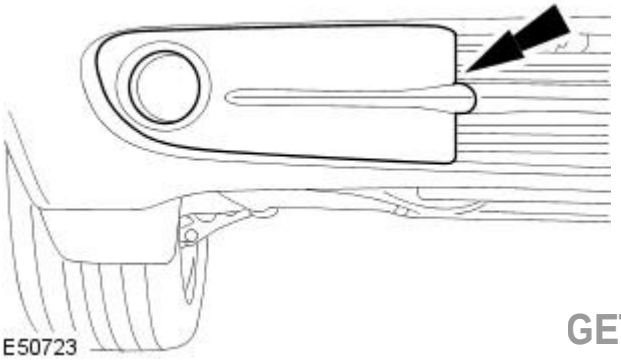


**36.** NOTE: Right-hand shown, left-hand similar.

Remove the front fog lamp covers.

GETtheMANUALS.org

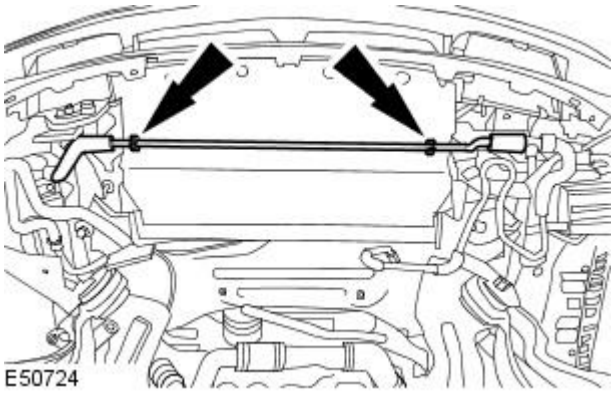
E50724

**37.** Detach the coolant hose.

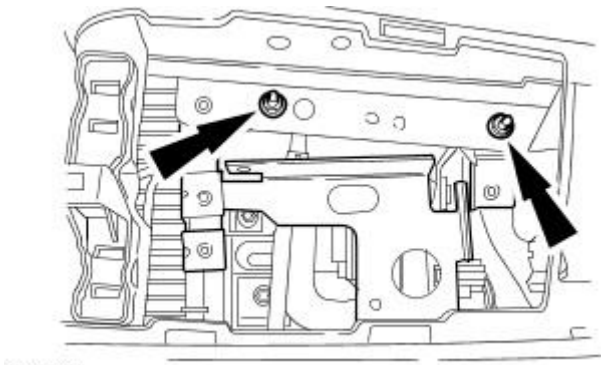
E50725

**38.** Detach the speed control module retaining bracket.

- Tie the speed control module retaining bracket aside.

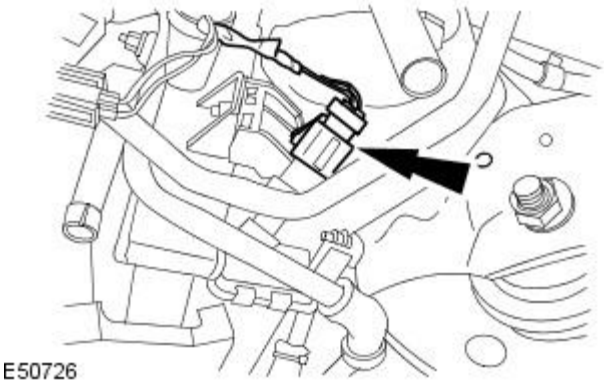
E50726

**39.** Disconnect the air conditioning pressure switch electrical connector.

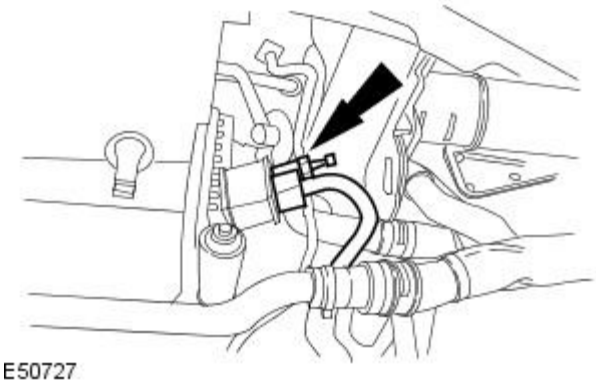
E50727

**40.** CAUTION: Cap the air conditioning line and the condenser to prevent dirt ingress.

Detach the air conditioning line.

- Remove and discard the O-ring seal.

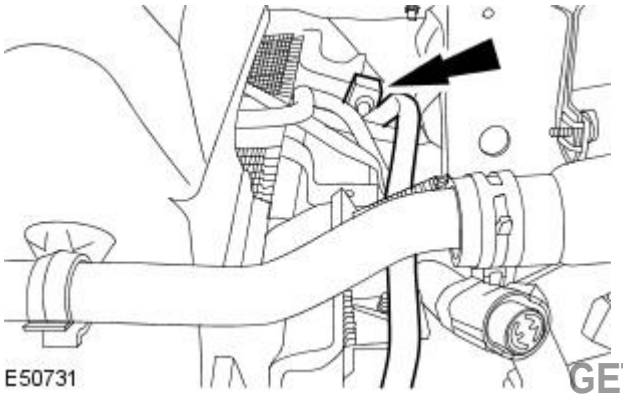
E50731

**41.** CAUTION: Cap the air conditioning line and the condenser to prevent dirt ingress.

Detach the air conditioning line.

- Remove and discard the O-ring seal.

GETtheMANUALS.org

**42.** Remove the fender splash shield.
For additional information, refer to: Fender Splash Shield (501-02 Front End Body Panels, Removal and Installation).

**43.** Detach the air conditioning line.

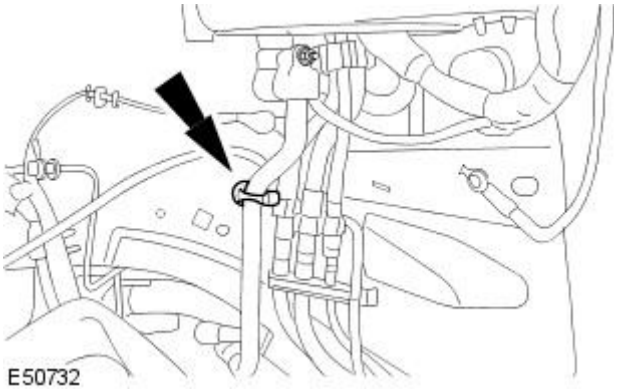


**44.** CAUTION: Cap the air conditioning line to prevent dirt ingress.

Detach the air conditioning line.

- Remove and discard the O-ring seal.

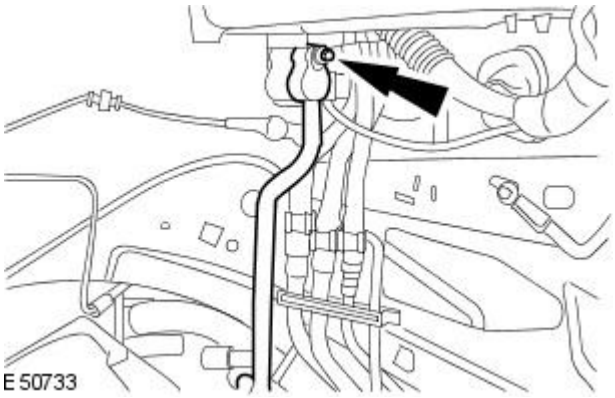


**45.** NOTE: Left-hand shown, right-hand similar.

Detach the front wheel speed sensors.

1. Remove the front wheel speed sensor retaining clip.
2. Detach the front wheel speed sensors.

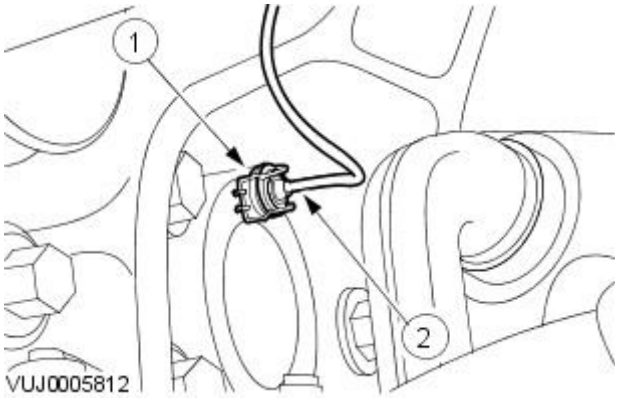


**46.** CAUTION: The brake caliper must be supported at all times.

• NOTE: Left-hand shown, right-hand similar.

Detach the brake caliper and brake caliper anchor plate and secure to one side.

- Remove and discard the brake caliper retaining bolts.

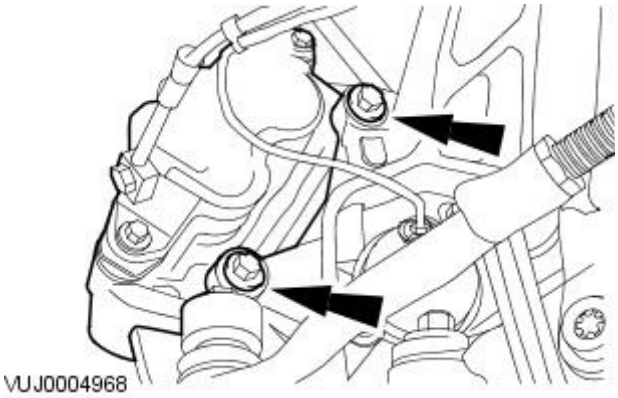


GETtheMANUALS.org

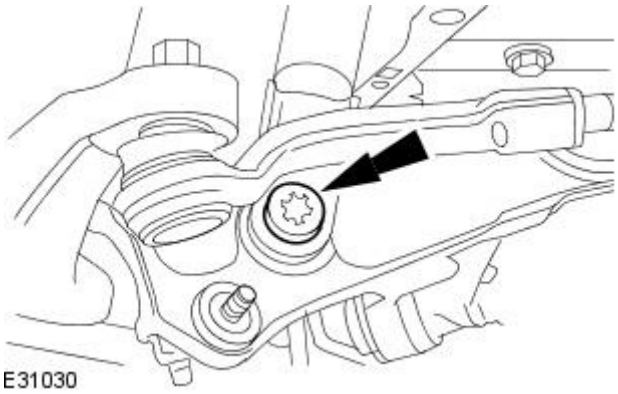


**47.** NOTE: Left-hand shown, right-hand similar.

Detach the shock absorber.

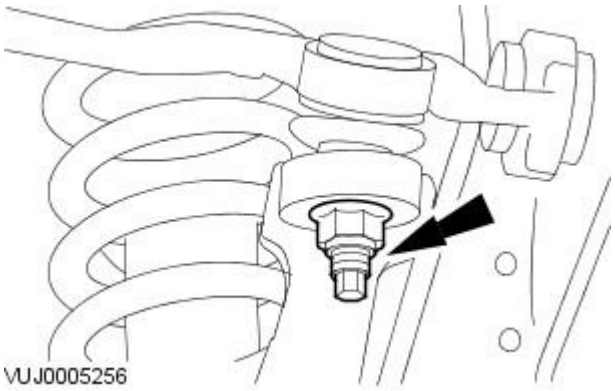


**48.** CAUTION: Make sure the wheel knuckle is supported. Failure to follow these instructions may result in damage to the vehicle.

- NOTE: Left-hand shown, right-hand similar.

Detach the upper arm.

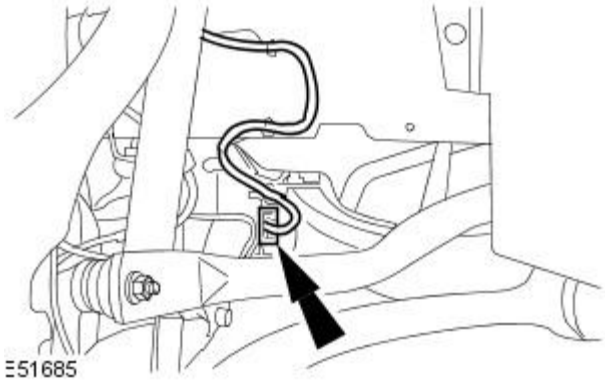


**49.** Disconnect the headlamp leveling sensor electrical connector.

**50.** Lower the vehicle.

**51.** Detach the engine brace bar.

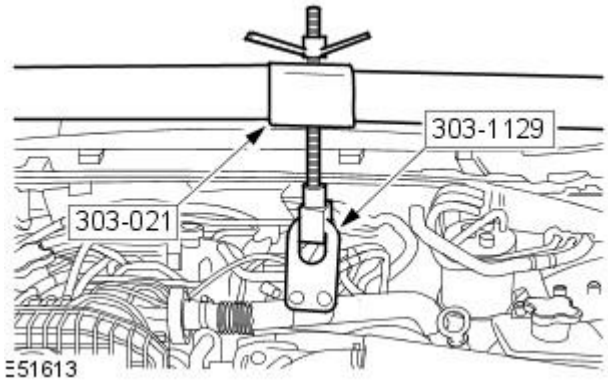


**52.** Raise the vehicle.

GETtheMANUALS.org

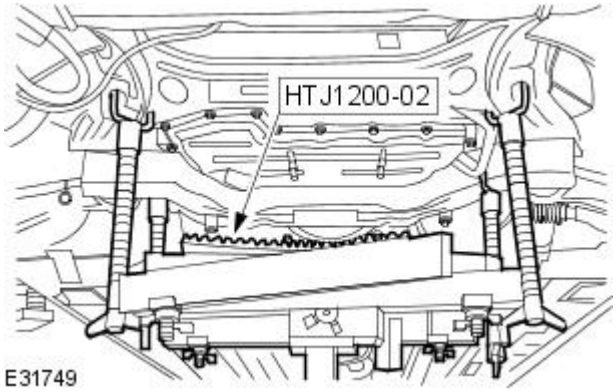


**53.** Install the special tool.

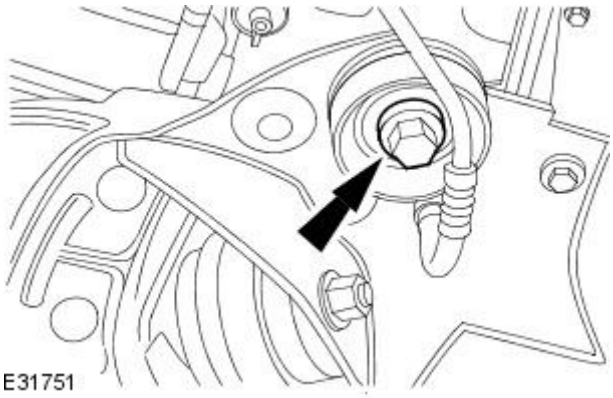


**54.** NOTE: Left-hand shown, right-hand similar.

Remove the front subframe front retaining bolts.

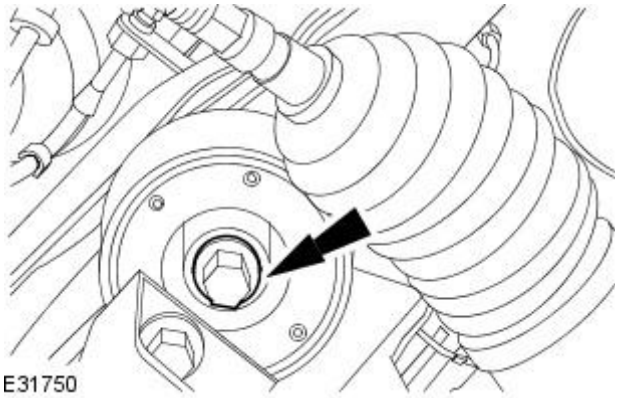


**55.** NOTE: Left-hand shown, right-hand similar.

Remove the front subframe rear retaining bolts.

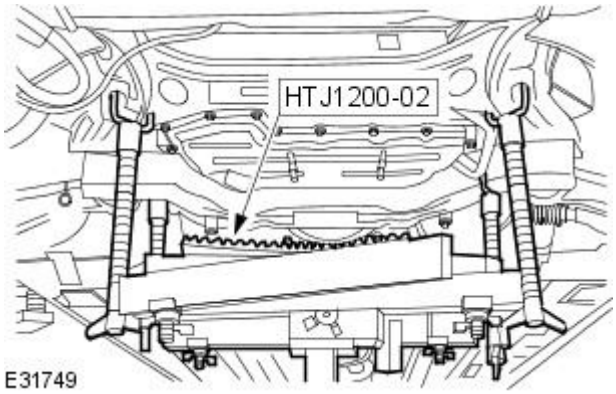


**56.** Using the special tool, remove the engine and front subframe assembly.

Vehicles with automatic transmission

GETtheMANUALS.org

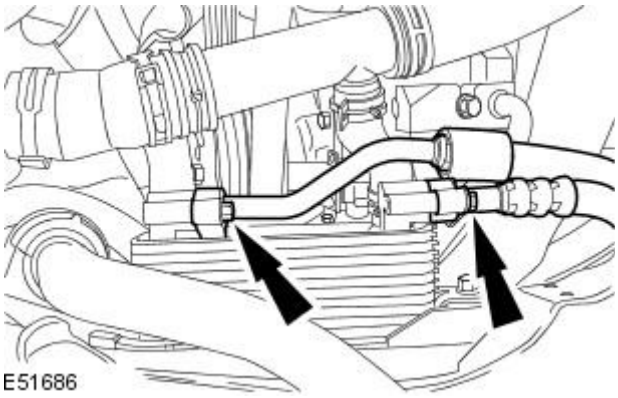


**57.** Detach the fluid cooler lines.

- Remove and discard the fluid cooler O-ring seals.

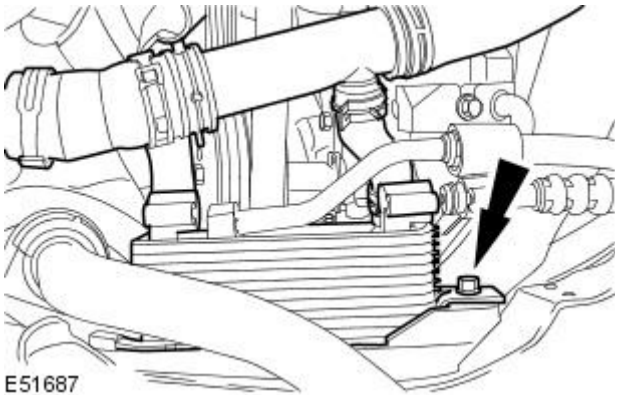


**58.** Detach the fluid cooler.

- Remove the retaining bolt.

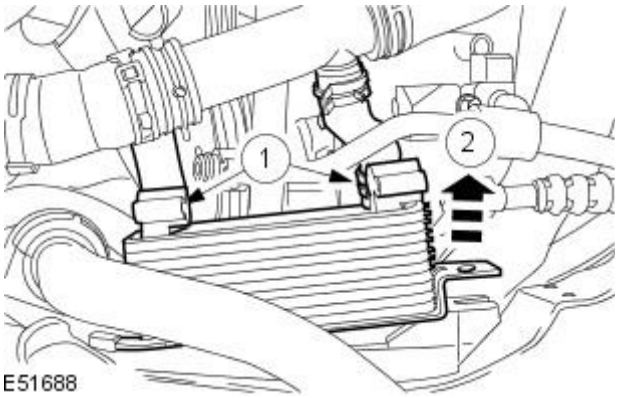


**59.** Remove the fluid cooler.

1. Detach the coolant hoses.
2. Remove the fluid cooler.

All vehicles

**60.** Install the special tool.

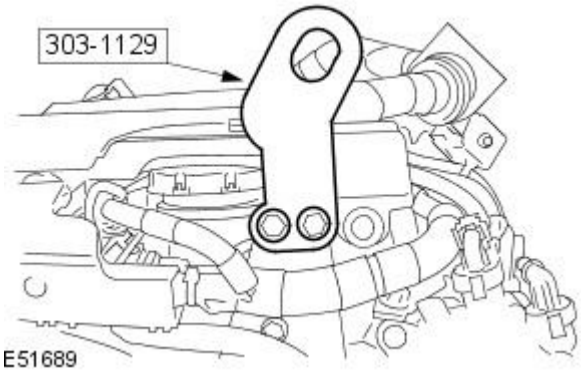


GETtheMANUALS.org

**61.** Install the special tool.

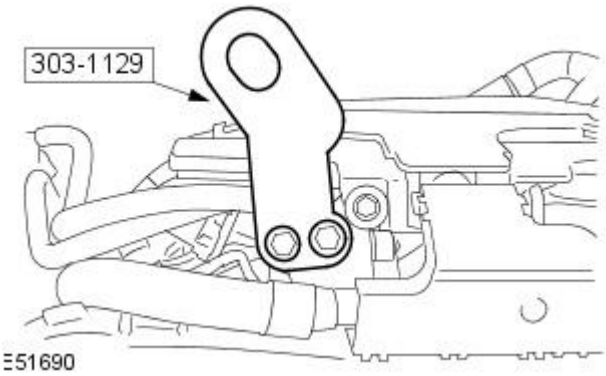


**62.** Detach the port deactivation valve retaining bracket.

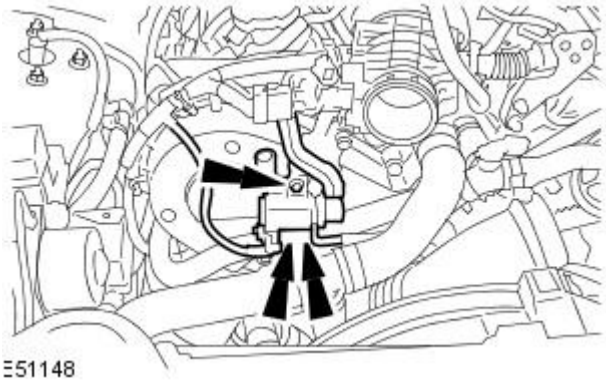


**63.** Disconnect the air intake sensor electrical connector.

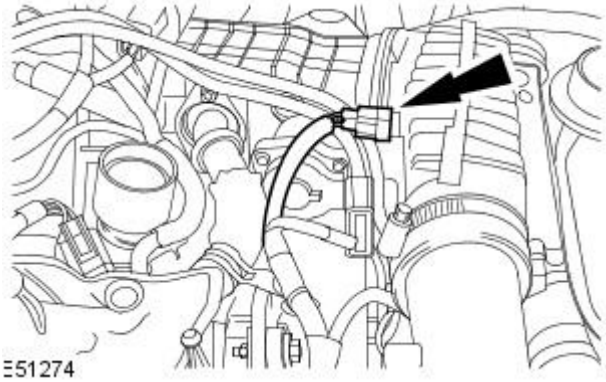


**64.** Detach the intake air elbow.

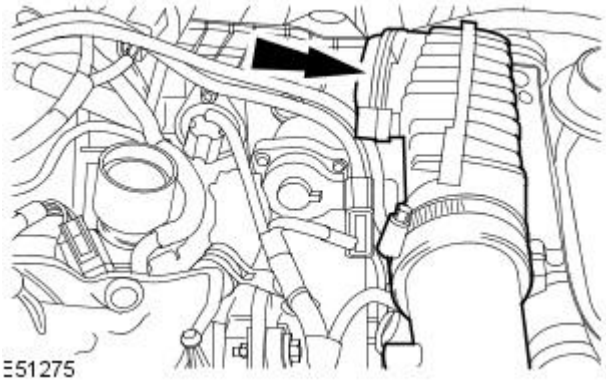


**65.** Disconnect the throttle motor electrical connector.

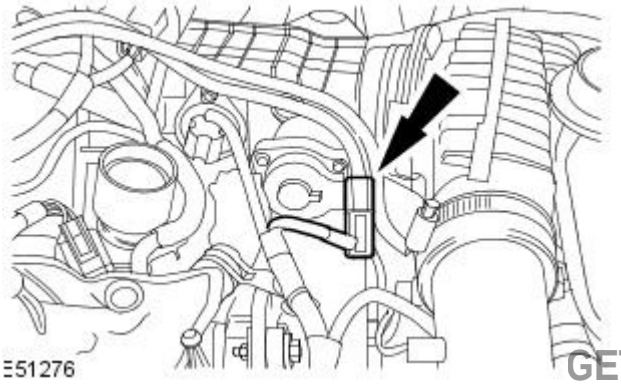


GETtheMANUALS.org

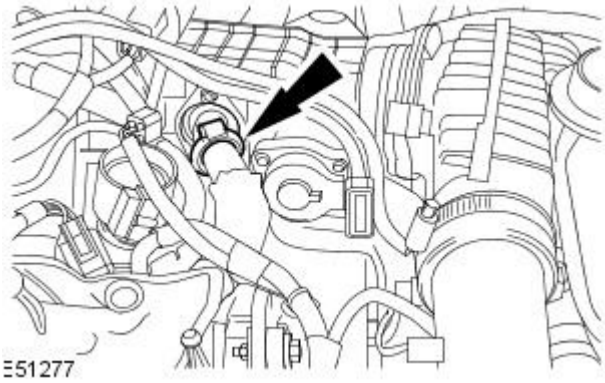


**66.** NOTE: Right-hand shown, left-hand similar.

Remove and discard the exhaust gas recirculation (EGR) valve pipe retaining clip.

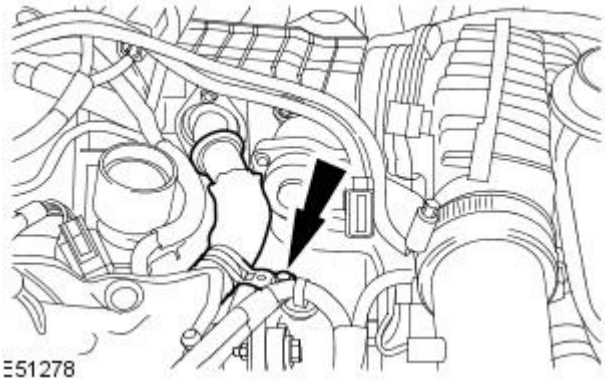


**67.** Disconnect the air intake sensor electrical connector.

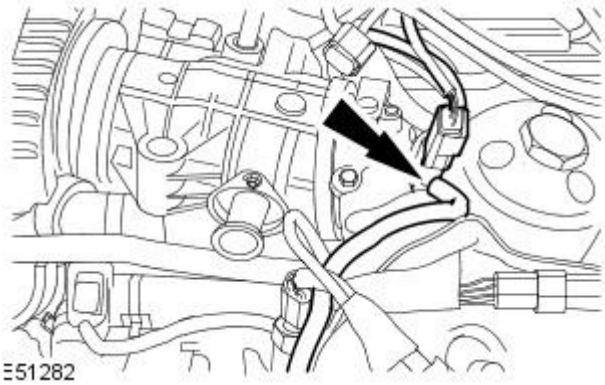


**68.** Detach the electrical connector.

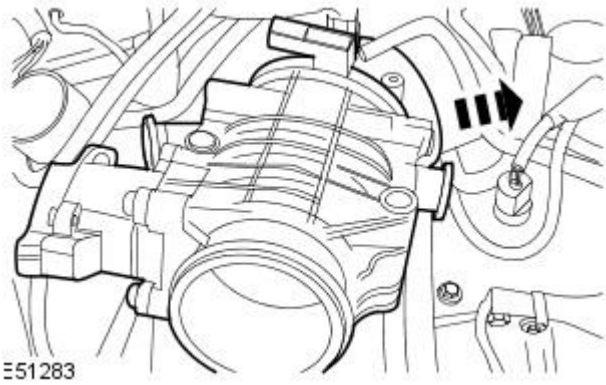


**69.** Reposition the intake air shutoff throttle.

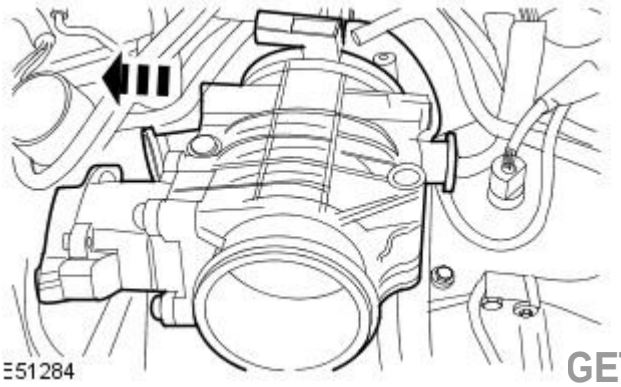


**70.** Remove the intake air shutoff throttle.

- Remove and discard the O-ring seals.

GETtheMANUALS.org

**71.** Install the special tool.

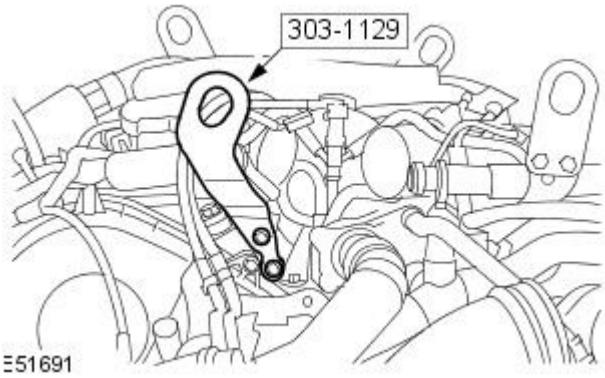


**72.** NOTE: Left-hand shown, right-hand similar.

Remove the engine mount retaining nut.

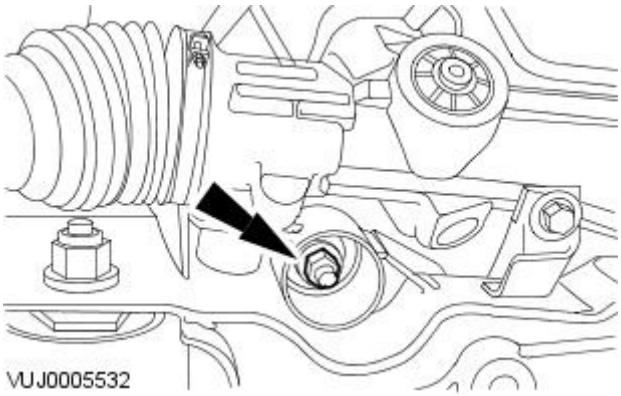


**73.** Remove the engine using a suitable hydraulic lift.

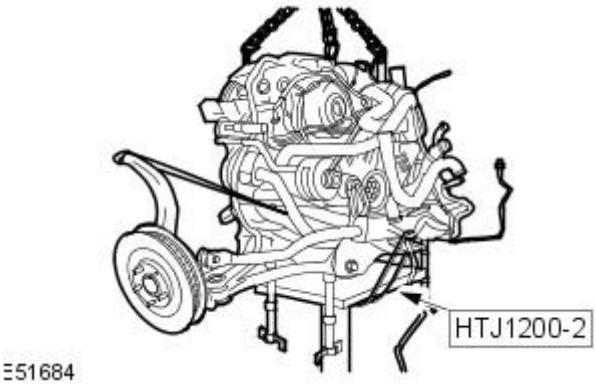


GETtheMANUALS.org

# Engine - 2.7L V6 - TdV6 - Engine

Installation

| Special Tool(s) | |
|---|---|
| | Engine Lifting Brackets<br><br>303-1129 |
| 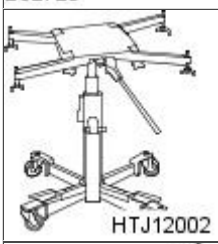  | Powertrain Assembly Jack<br><br>HTJ1200-02 |
| 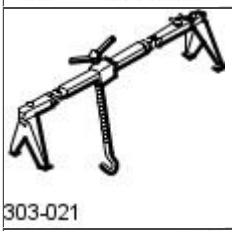  | Engine Support Bracket<br><br>303-021 |
| 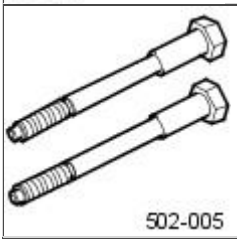  | Alignment Bolts<br><br>502-005 |

## Installation

All vehicles

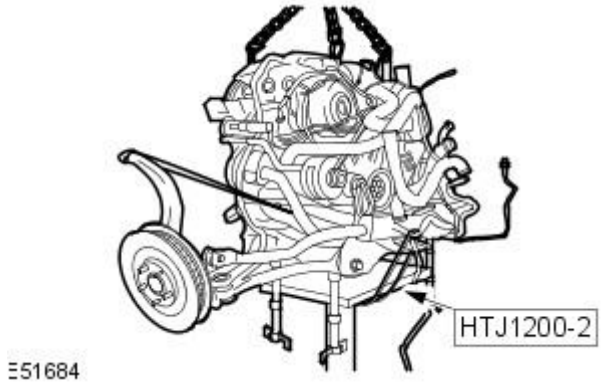


**1.** Install the engine using a suitable hydraulic lift.

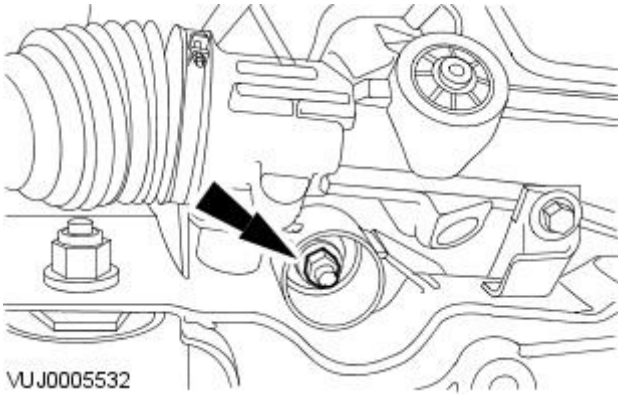


**2.** NOTE: Left-hand shown, right-hand similar.

Install the engine mount retaining nut.

- Tighten to 63 Nm.

GETtheMANUALS.org

**3.** Remove the special tool.

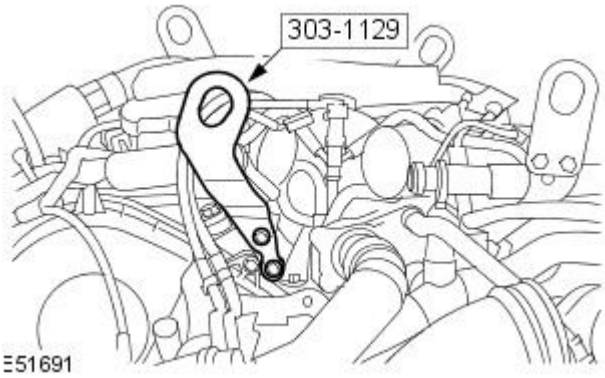


**4.** Install the intake air shutoff throttle.

- Install new O-ring seals.

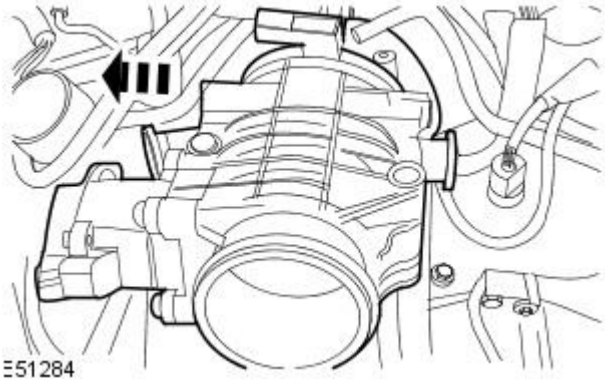


**5.** Reposition the intake air shutoff throttle.

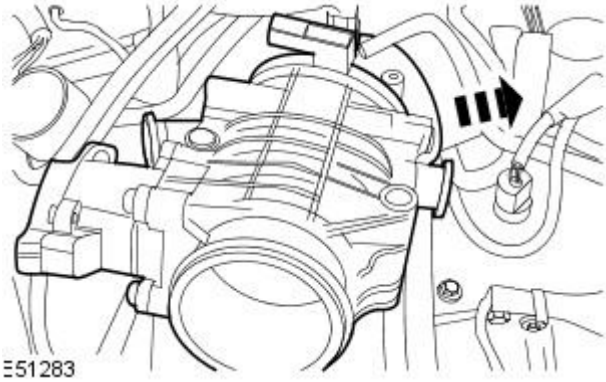


**6.** Attach the electrical connector.

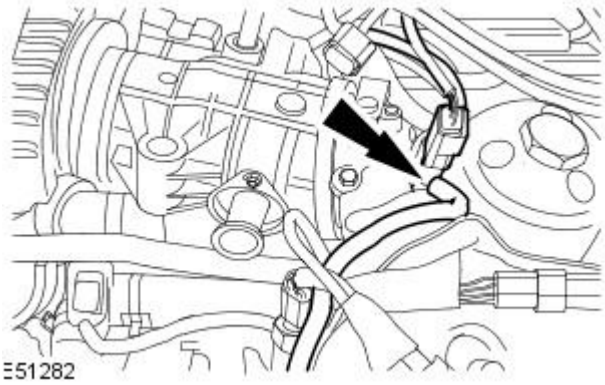


**7.** Connect the air intake sensor electrical connector.

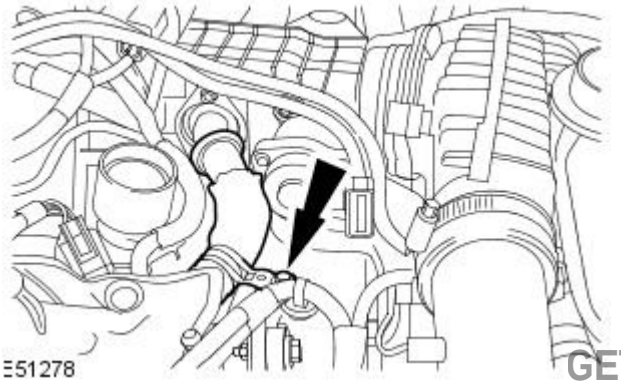


GETtheMANUALS.org

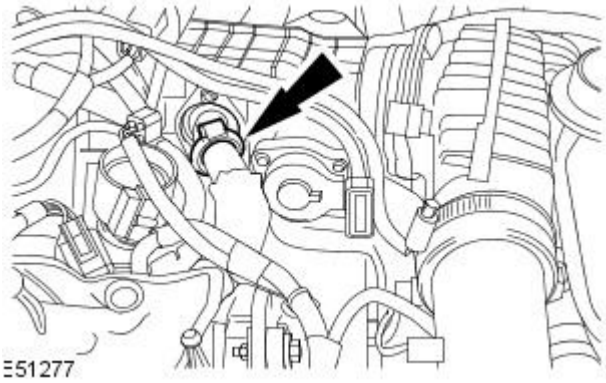


**8.** NOTE: Right-hand shown, left-hand similar.

Install new exhaust gas recirculation (EGR) valve pipe retaining clip.

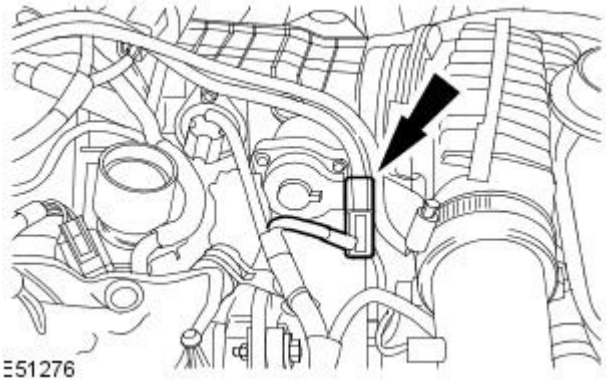


**9.** Connect the throttle motor electrical connector.

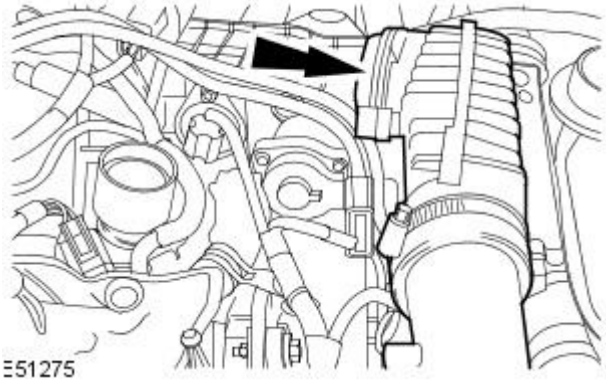


**10.** Attach the intake air elbow.

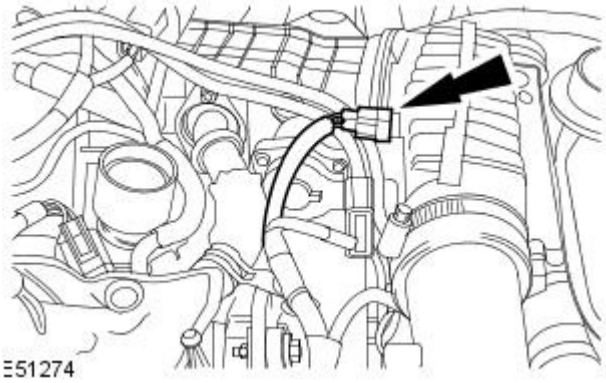


**11.** Connect the air intake sensor electrical connector.

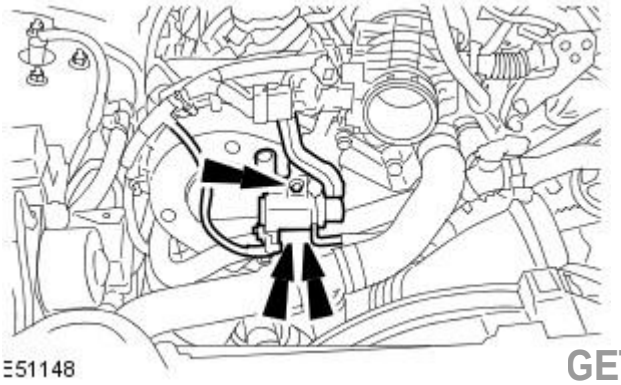


**12.** Attach the port deactivation valve retaining bracket.

- Tighten to 8 Nm.

GETtheMANUALS.org

**13.** Remove the special tool.

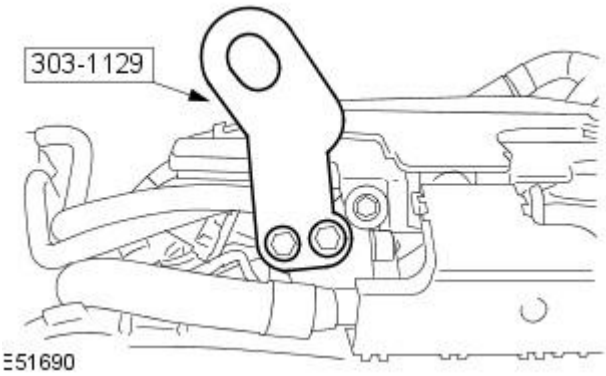


**14.** Remove the special tool.

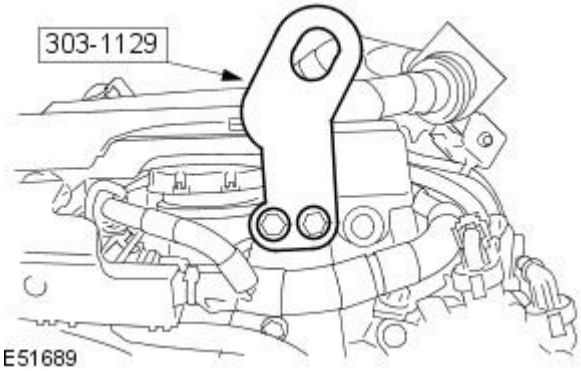


Vehicles with automatic transmission

**15.** Install the fluid cooler.

1. Install the fluid cooler.
2. Attach the coolant hoses.

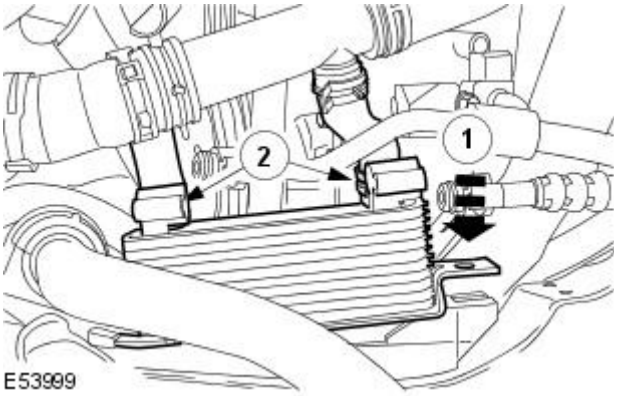


**16.** Attach the fluid cooler.

- Install the retaining bolt.

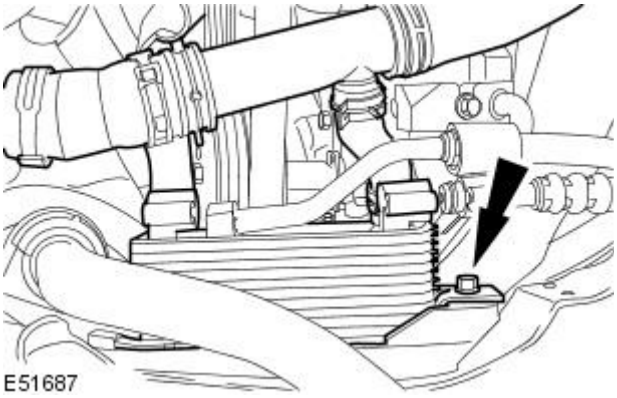


GETtheMANUALS.org

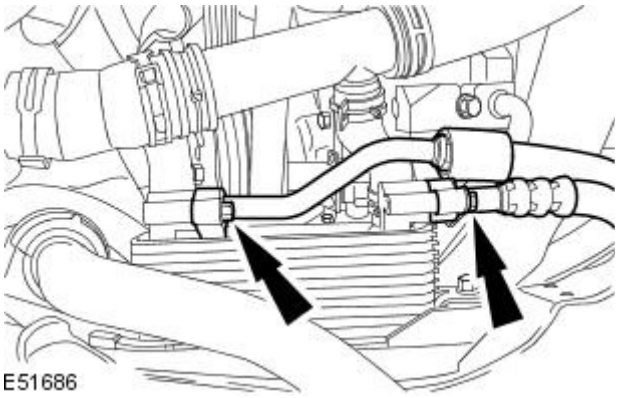


**17.** Attach the fluid cooler lines.

- Install new fluid cooler O-ring seals.

All vehicles

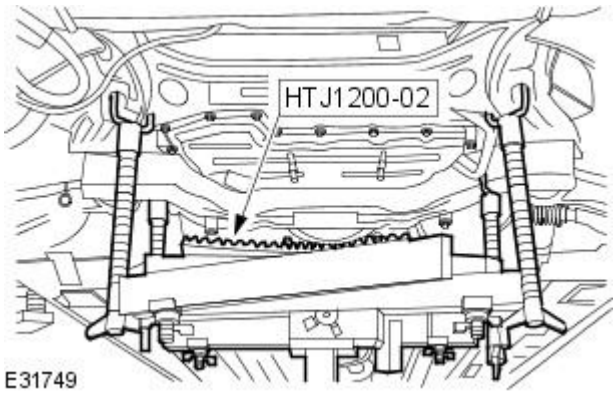


**18.** Using the special tool, install the engine and front subframe assembly.

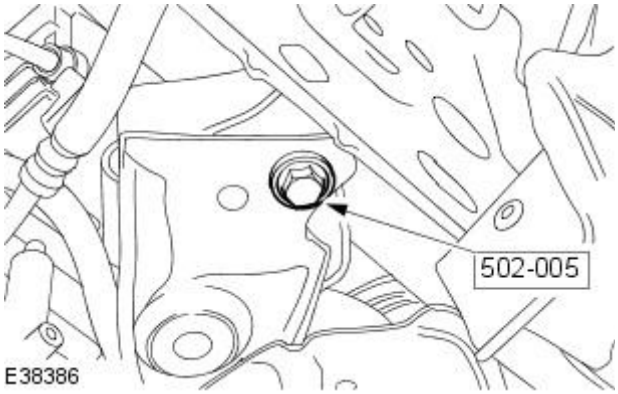


**19.** NOTE: Left-hand shown, right-hand similar.

Install the special tool.

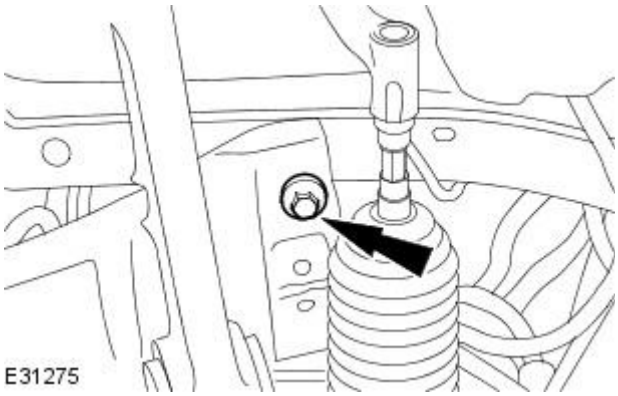


**20.** NOTE: Left-hand shown, right-hand similar.

Install the front subframe rear retaining bolts.

- Tighten to 80 Nm + 300°.

GETtheMANUALS.org

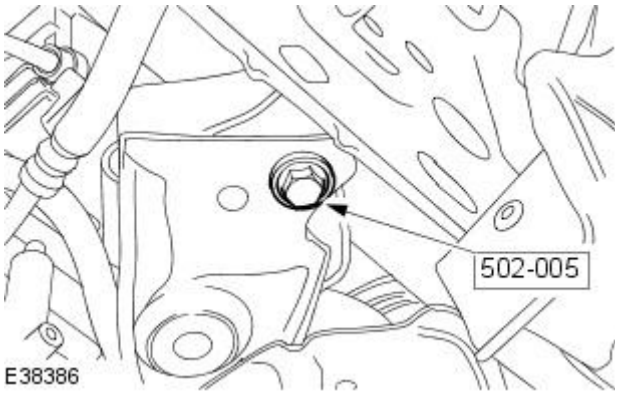


**21.** NOTE: Left-hand shown, right-hand similar.

Remove the special tool.

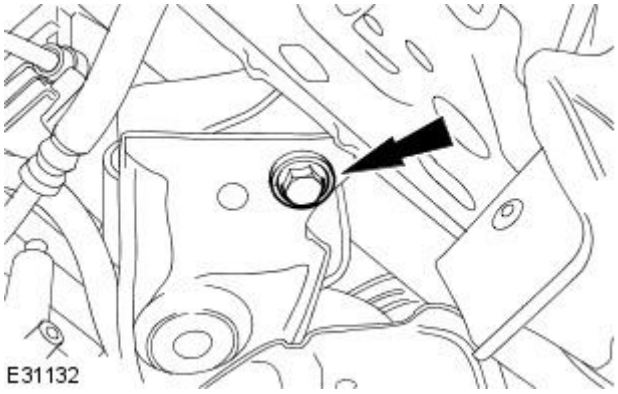


**22.** NOTE: Left-hand shown, right-hand similar.

Install the front subframe front retaining bolt.

- Tighten to 180 Nm + 300°.

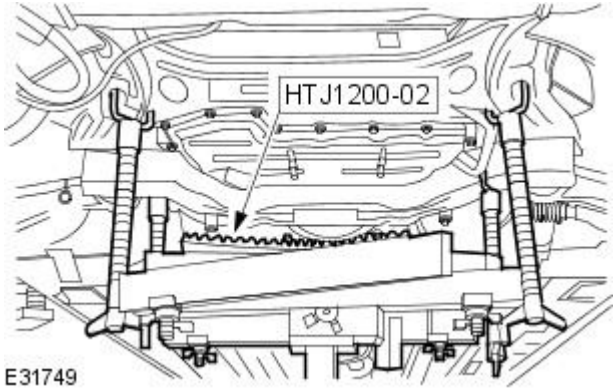


**23.** Remove the special tool.

**24.** Lower the vehicle.

**25.** Attach the engine brace bar.

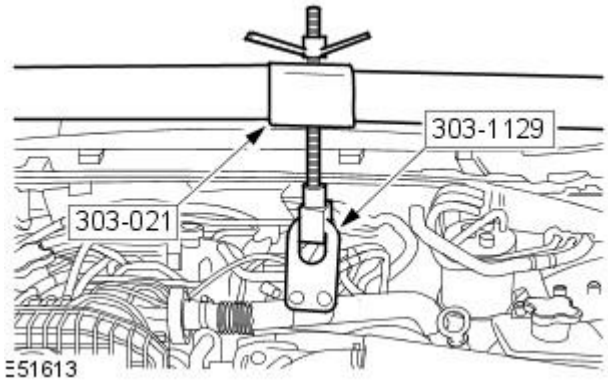


**26.** Raise the vehicle.

GETtheMANUALS.org

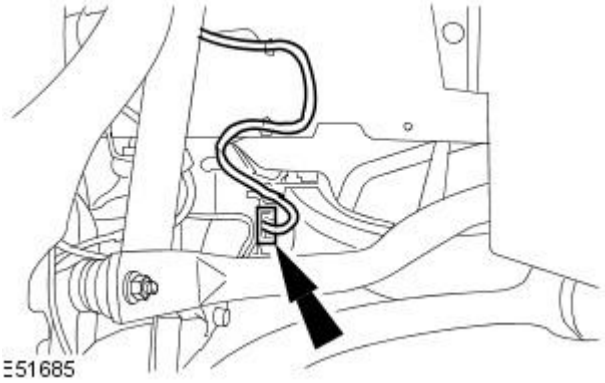


**27.** Connect the headlamp leveling sensor electrical connector.

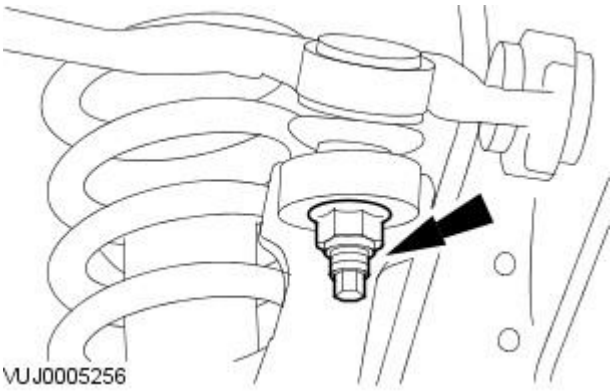


**28.** CAUTION: Make sure the wheel knuckle is supported. Failure to follow these instructions may result in damage to the vehicle.

• NOTE: Left-hand shown, right-hand similar.

Attach the upper arm.

- Tighten to 90 Nm.

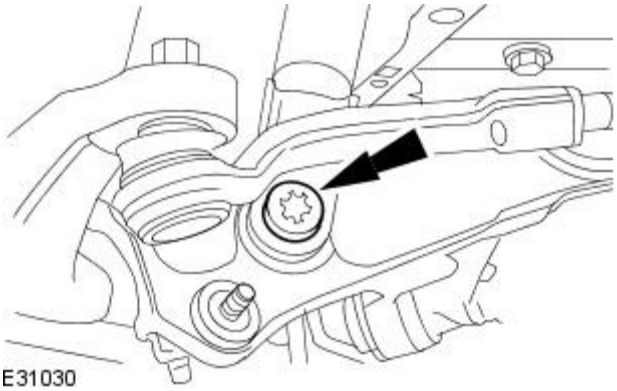


**29.** NOTE: Left-hand shown, right-hand similar.

Attach the shock absorber.

- Tighten to 175 Nm.

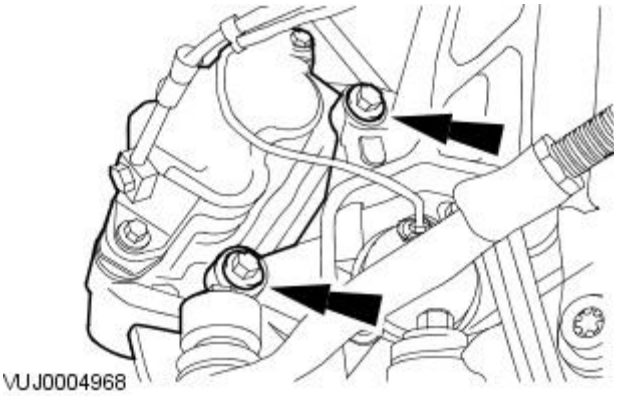


**30.** CAUTION: The brake caliper must be supported at all times.

• NOTE: Left-hand shown, right-hand similar.

Attach the brake caliper and brake caliper anchor plate.

- Install new brake caliper retaining bolts.
- Tighten to 103 Nm.

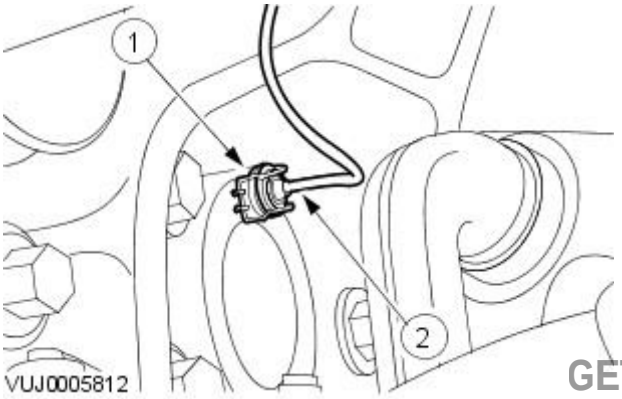


**31.** NOTE: Left-hand shown, right-hand similar.

Attach the front wheel speed sensors.

1. Attach the front wheel speed sensors.
2. Install the front wheel speed sensor retaining clip.

GETtheMANUALS.org

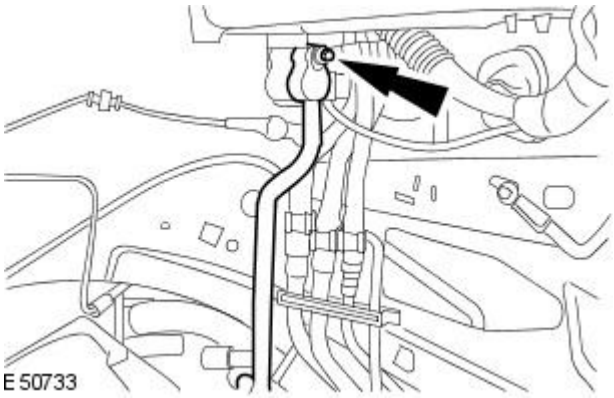


**32.** CAUTION: Un-cap the ports.

Attach the air conditioning line.

- Install a new O-ring seal.

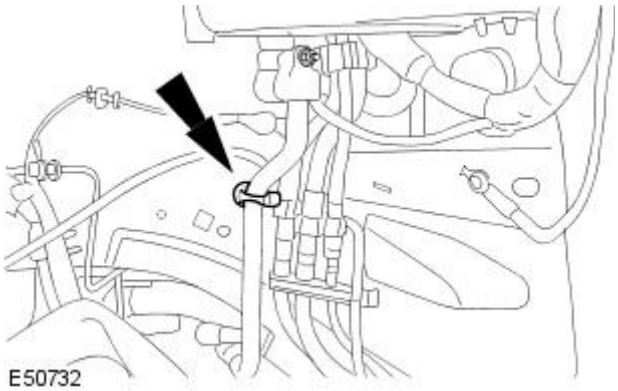


**33.** Attach the air conditioning line.

**34.** Install the fender splash shield.
For additional information, refer to: Fender Splash Shield (501-02 Front End Body Panels, Removal and Installation).

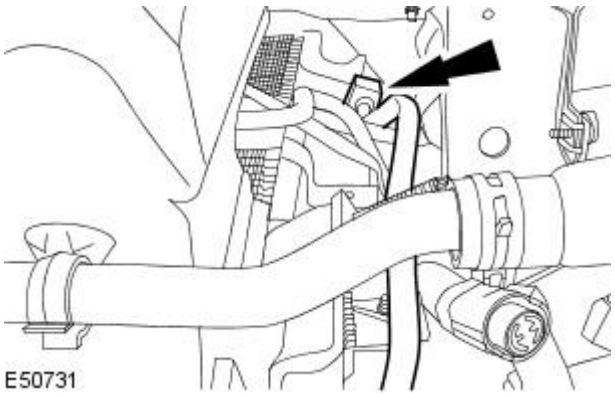


**35.** CAUTION: Un-cap the exposed ports.

Attach the air conditioning line.

- Install the O-ring seal.

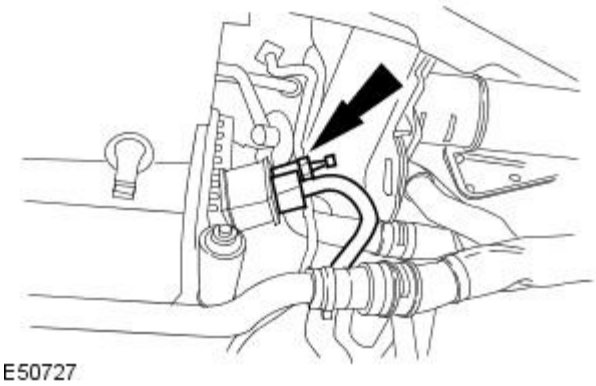


**36.** CAUTION: Un-cap the exposed ports.

Attach the air conditioning line.

- Install the O-ring seal.

GETtheMANUALS.org

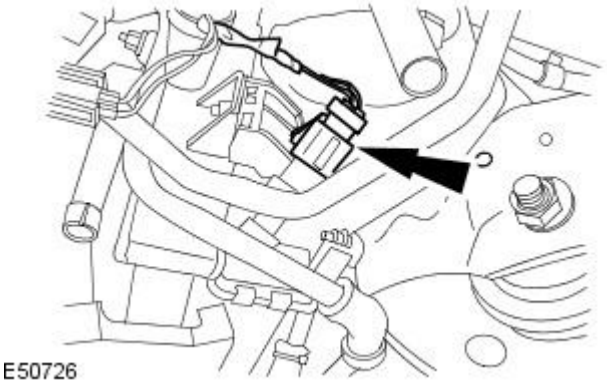
E50726

**37.** Connect the air conditioning pressure switch electrical connector.

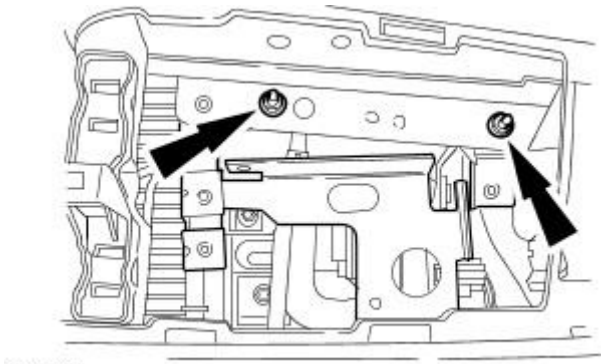
E50725

**38.** Attach the speed control module retaining bracket.

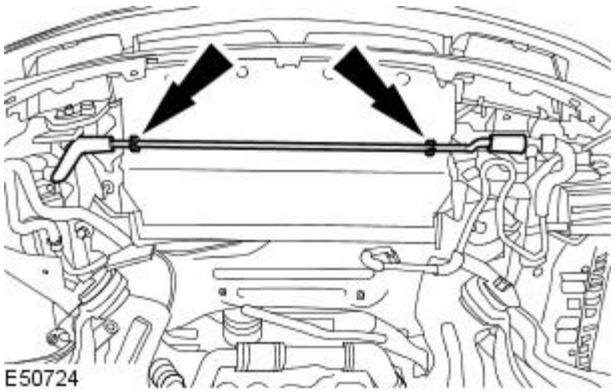
E50724

**39.** Attach the coolant hose.

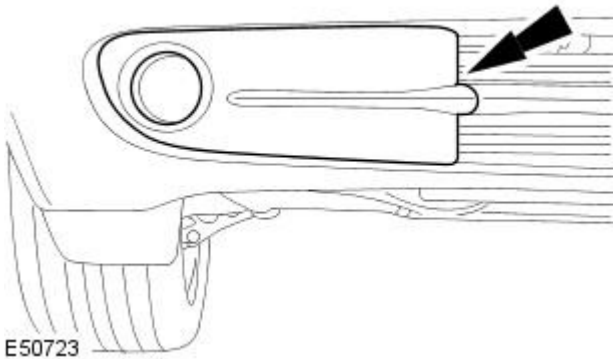
E50723

**40.** NOTE: Right-hand shown, left-hand similar.

Install the front fog lamp covers.

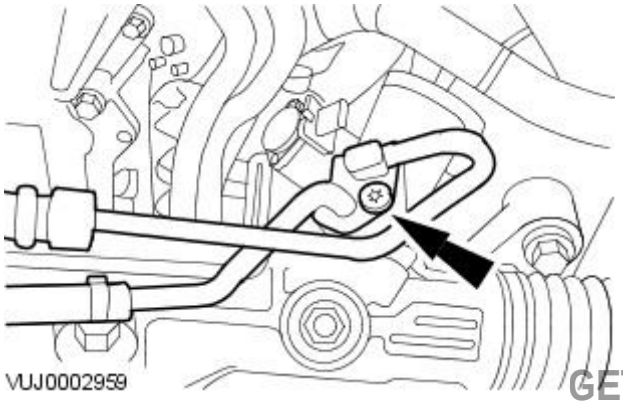
VUJ0002959

**41.** CAUTIONS:

Un-cap the exposed ports.

If power steering fluid comes into contact with the paintwork, the affected area must be immediately washed down with cold water.

Connect the power steering supply and return lines.

- Install new O-ring seals.
- Tighten to 15 Nm.

GETtheMANUALS.org

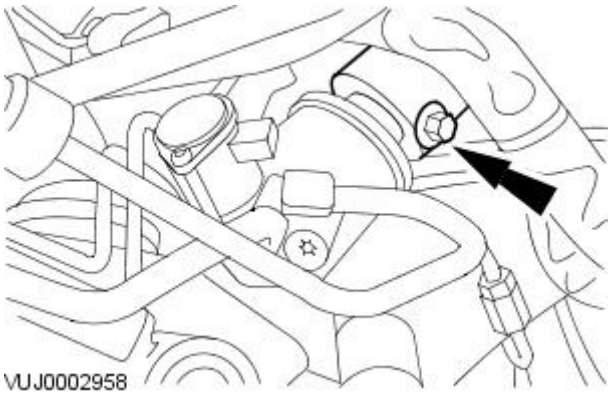


**42.** Attach the lower steering column.

- Install a new steering gear shaft pinch bolt.
- Tighten to 35 Nm.

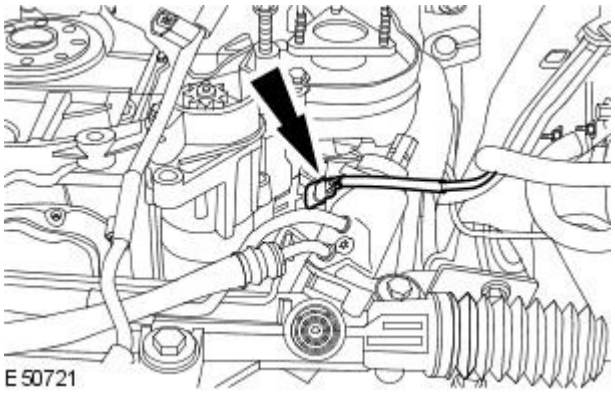


**43.** Connect the power steering control valve actuator electrical connector.

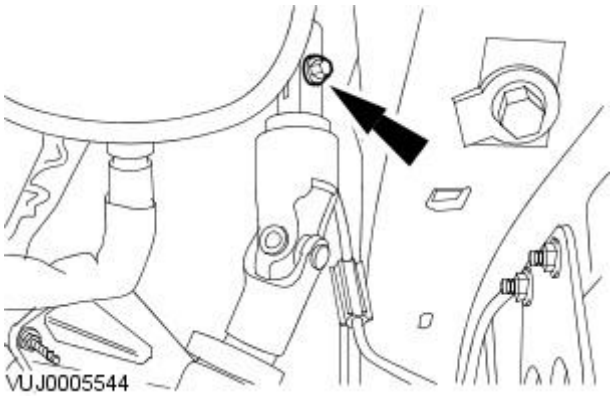


**44.** Tighten to 35 Nm.

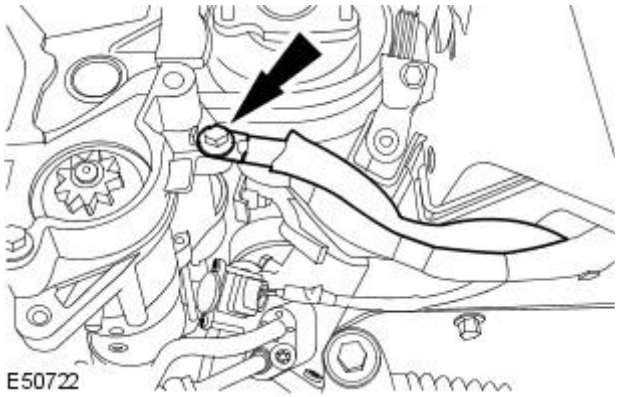


**45.** Attach the earth cable.

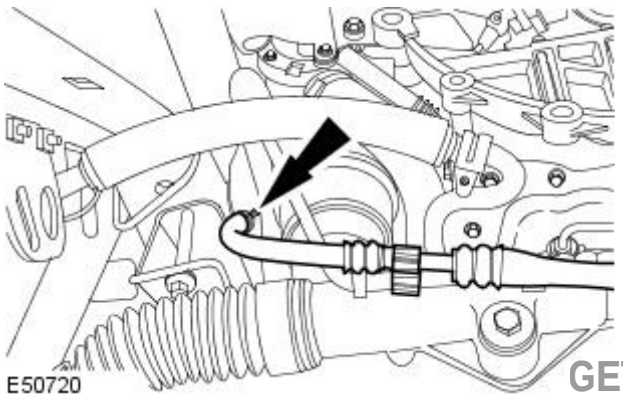


**46.** Attach the power steering hose.

GETtheMANUALS.org

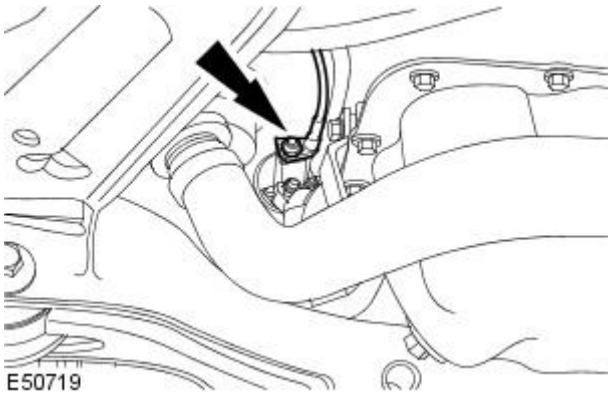


**47.** Attach the starter motor wiring harness.

- Tighten to 10 Nm.

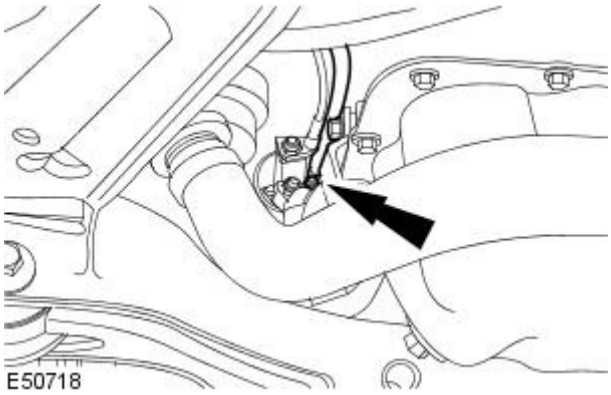


**48.** Detach the starter motor wiring harness.

- Tighten to 6 Nm.

**49.** Lower the vehicle.

**50.** NOTE: Right-hand shown, left-hand similar.

Remove the radiator support.

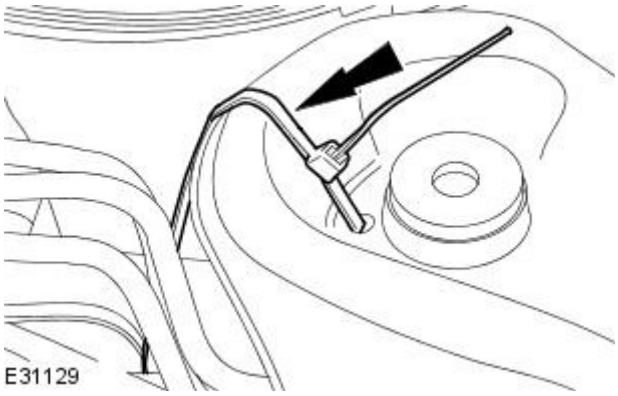


**51.** Attach the thermostat housing.

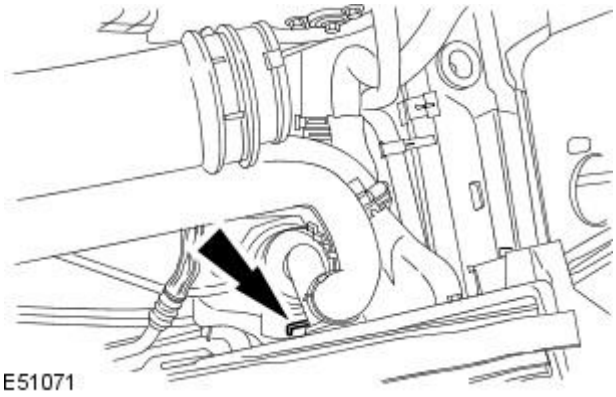


**52.** Connect the charge air cooler hose.

- Tighten to 4 Nm.

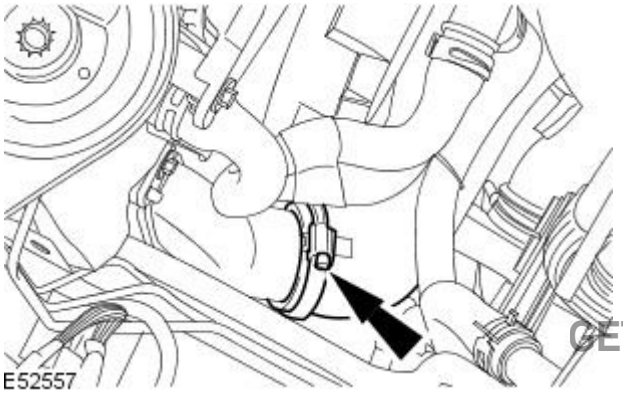


GETtheMANUALS.org

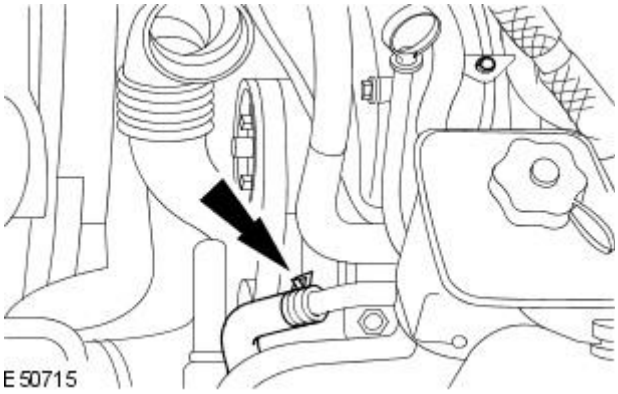


**53.** Connect the coolant hose.

**54.** Install the power steering fluid reservoir.
For additional information, refer to: Power Steering Fluid Reservoir (211-02 Power Steering, Removal and Installation).

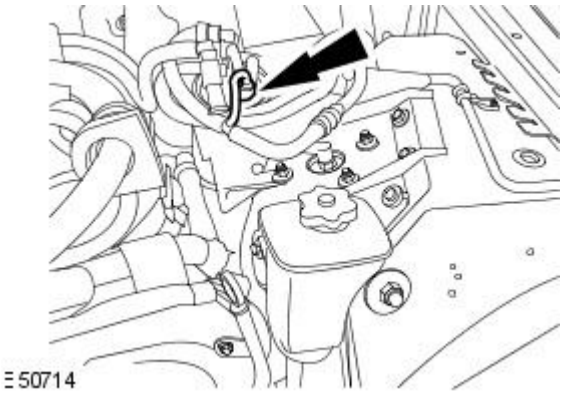


**55.** NOTE: Un-cap the exposed ports.

Connect the fuel filter return hose.

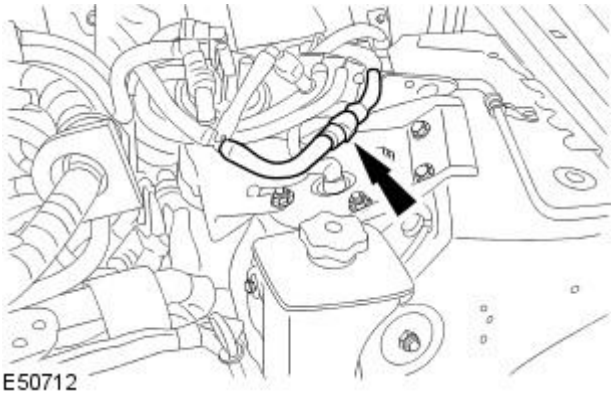


**56.** NOTE: Un-cap the exposed ports.

Connect the fuel filter return hose.

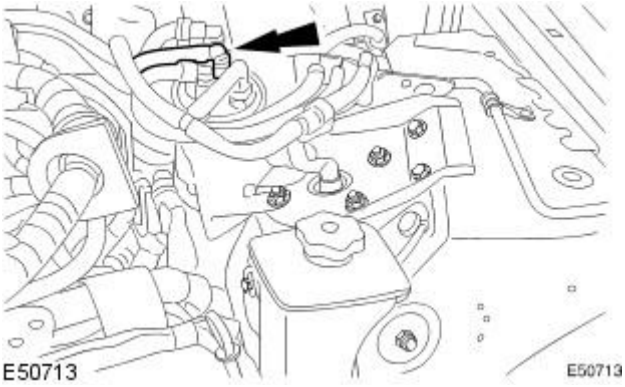


**57.** NOTE: Un-cap the exposed ports.

Connect the fuel filter feed hose.

GETtheMANUALS.org

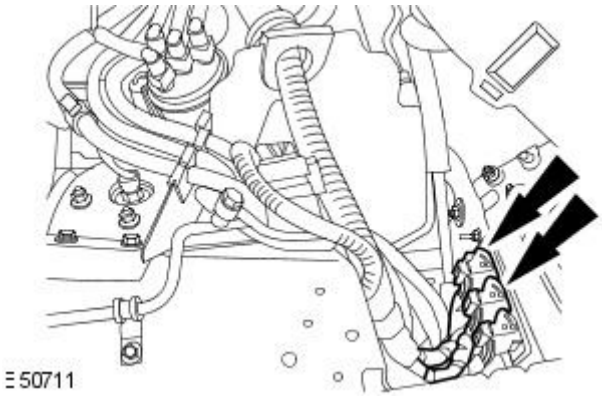


**58.** Connect the engine control module (ECM) electrical connectors.

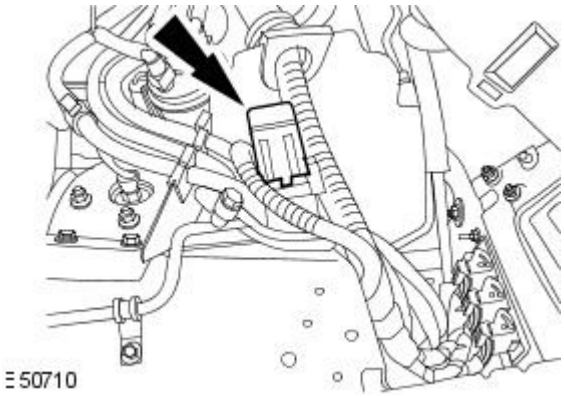


**59.** Connect the engine wiring harness electrical connector.

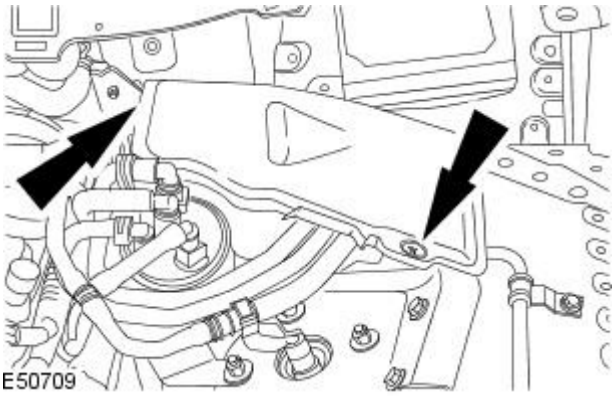


**60.** Install the left hand engine compartment trim panel.

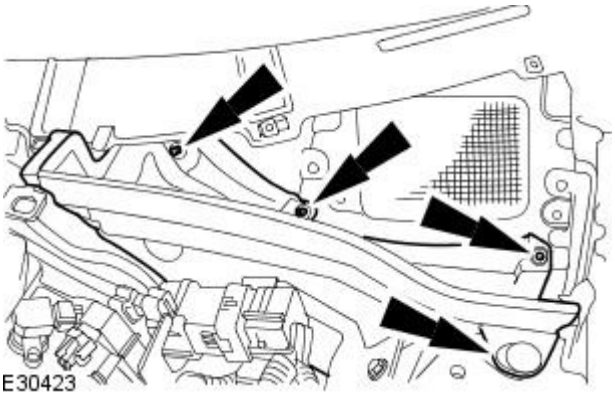


**61.** Install the engine compartment panel.

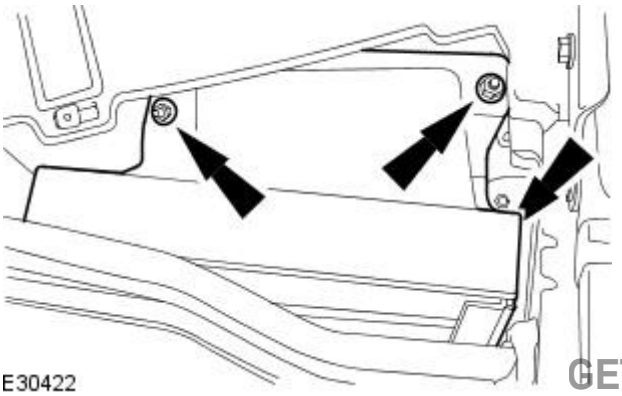


**62.** Install the cabin air filter housing.

GETtheMANUALS.org

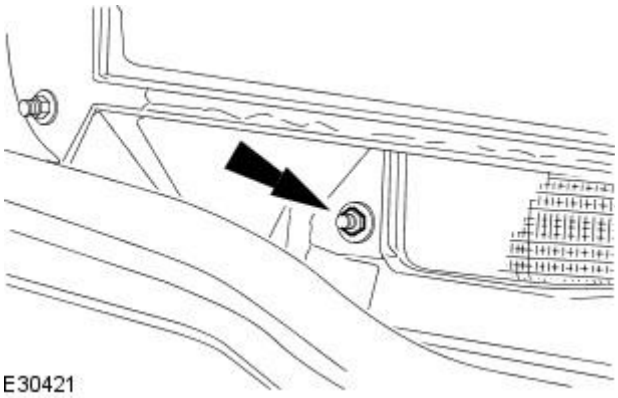


**63.** Remove the cabin air filter housing retaining nut.

**64.** Install the cabin air filter.
For additional information, refer to: Cabin Air Filter (412-01 Air Distribution and Filtering, Removal and Installation).

**65.** Install the air intake hose.

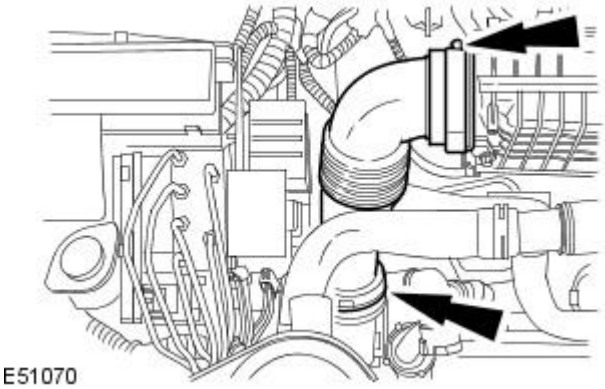


**66.** Connect the glow plug harness electrical connectors.

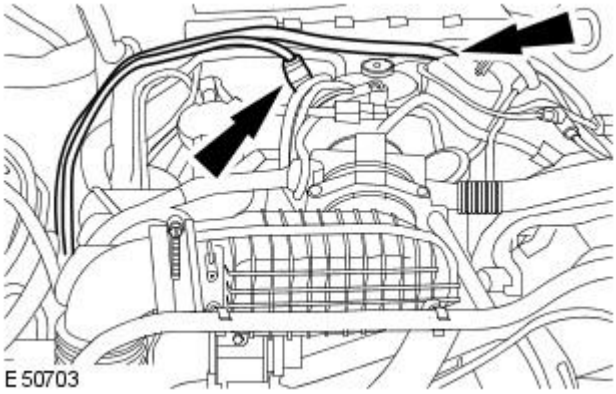


**67.** Attach the brake booster vacuum pipe.

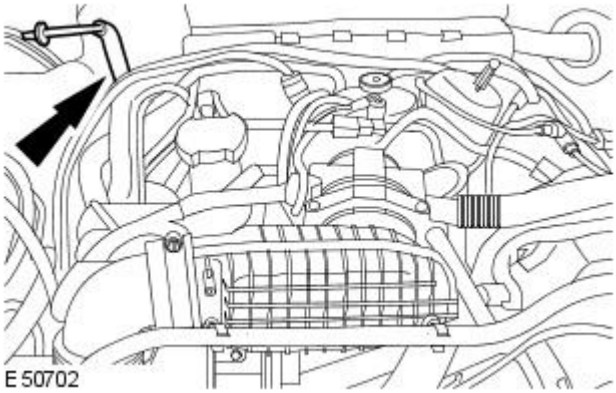


Vehicles with manual transmission

GETtheMANUALS.org

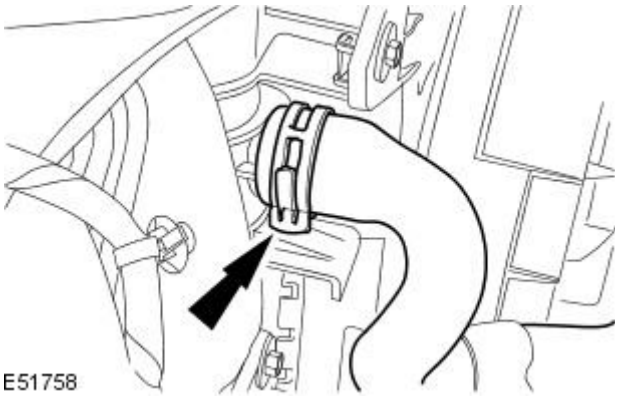


**68.** Attach the radiator hose.

All vehicles

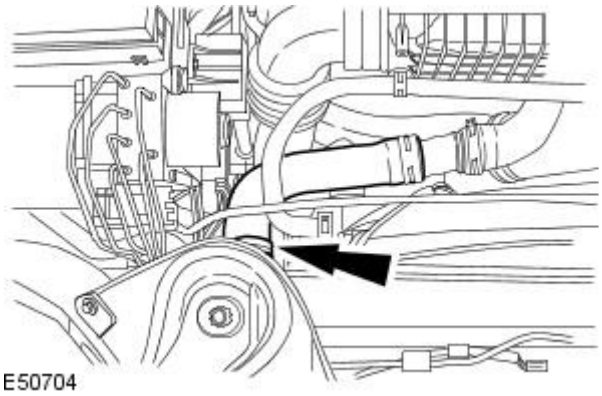


**69.** Attach the radiator top hose.

**70.** Recharge the air conditioning system.
For additional information, refer to: Air Conditioning (A/C) System Recovery, Evacuation and Charging (412-00 Climate Control System - General Information, General Procedures).

Vehicles with manual transmission

**71.** Install the transmission.
For additional information, refer to: Transmission (308-03B Manual Transmission/Transaxle - Vehicles With: S6-53 6-Speed Manual Transmission, Installation).

Vehicles with automatic transmission

**72.** Install the transmission assembly.
For additional information, refer to: Transmission - 2.7L V6 - TdV6 (307-01 Automatic Transmission/Transaxle, Installation).

All Vehicles

**73.** Install the cooling fan motor and shroud.
For additional information, refer to: Cooling Fan Motor and Shroud (303-03C Engine Cooling - 2.7L V6 - TdV6, Removal and Installation).

**74.** Fill and bleed the cooling system.
For additional information, refer to: Cooling System Draining, Filling and Bleeding (303-03C Engine Cooling - 2.7L V6 - TdV6, General Procedures).

GETtheMANUALS.org

# Engine Cooling - V8 4.2L Petrol / V8 S/C 4.2L Petrol / 2.5L NA V6 - AJV6 / 3.0L NA V6 - AJ27 -

**Lubricants, Fluids, Sealers and Adhesives**

| Description | Specification |
|---|---|
| Jaguar Premium Cooling System Fluid | WSS M97B44-D |
| Jaguar Premium Cooling System Flush | EGR-M14P7-A |

**Cooling System Refill Capacities**

| Engine | Capacity |
|---|---|
| 2.5L/3.0L | 9.4L |
| 4.2L | 13.3L |

**Torque Specifications**

| Description | Nm | lb-ft | lb-in |
|---|---|---|---|
| Coolant expansion tank retaining bolt | 3 | - | 27 |
| Coolant expansion tank bleed screw | 1 | - | 9 |
| Cooling fan motor and shroud retaining nuts | 7 | - | 62 |
| Thermostat housing retaining bolts - Vehicles with 2.5L or 3.0L engine | 10 | - | 89 |
| Thermostat housing retaining bolts - Vehicles with 4.2L engine | 9 | - | 80 |
| Water pump retaining bolts - Vehicles with 2.5L or 3.0L engine | 25 | 18 | - |
| Water pump retaining bolts - Vehicles with 4.2L engine | A | - | - |
| Water pump drive pulley retaining bolts - Vehicles with 4.2L engine | A | - | - |
| Radiator mounting bracket retaining bolts | 7 | - | 62 |
| Radiator drain plug | 1 | - | 9 |
| A = refer to the procedure for the correct torque sequence | - | - | - |

GETtheMANUALS.org

# Engine Cooling - V8 4.2L Petrol / V8 S/C 4.2L Petrol / 2.5L NA V6 - AJV6 / 3.0L NA V6 - AJ27 - Engine Cooling

Description and Operation

## Vehicles with 2.5L or 3.0L engine

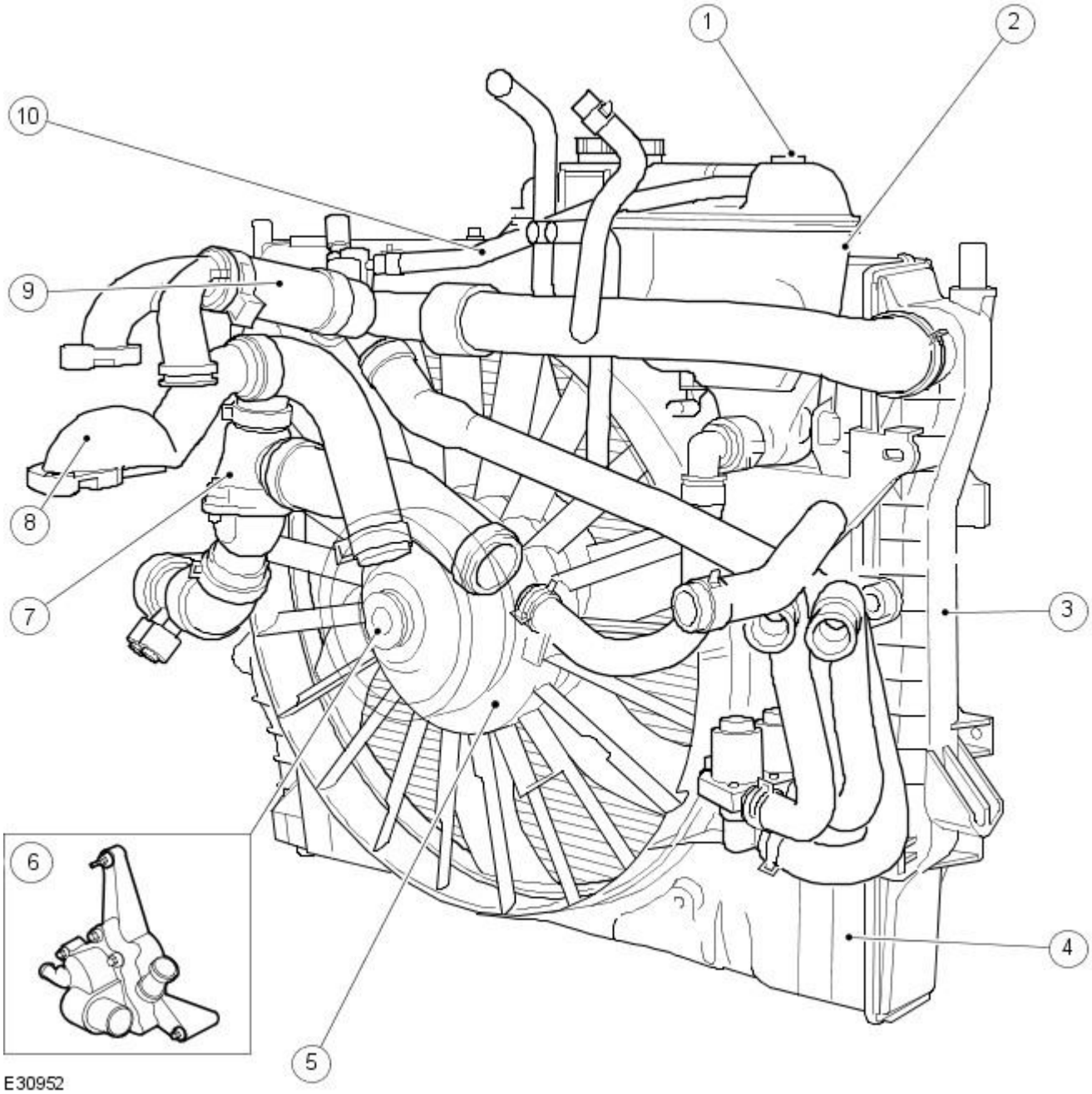


E30952

| Item | Part Number | Description |
|---|---|---|
| 1 | — | Bleed screw |
| 2 | — | Coolant expansion tank |
| 3 | — | Radiator |
| 4 | — | Radiator shroud |
| 5 | — | Cooling fan motor |
| 6 | — | Water pump |
| 7 | — | Thermostat housing |
| 8 | — | Engine coolant inlet |
| 9 | — | Engine coolant outlet |
| 10 | — | Vent hose |

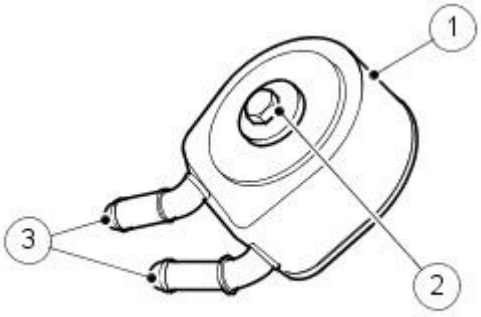


GETtheMANUALS.org

E31280

| Item | Part Number | Description |
|---|---|---|
| 1 | - | Engine oil cooler |
| 2 | — | Retaining bolt |
| 3 | — | Engine oil cooler inlet and outlet tubes |

## Vehicles with 4.2L engine

Vehicles with 4.2L engine without supercharger

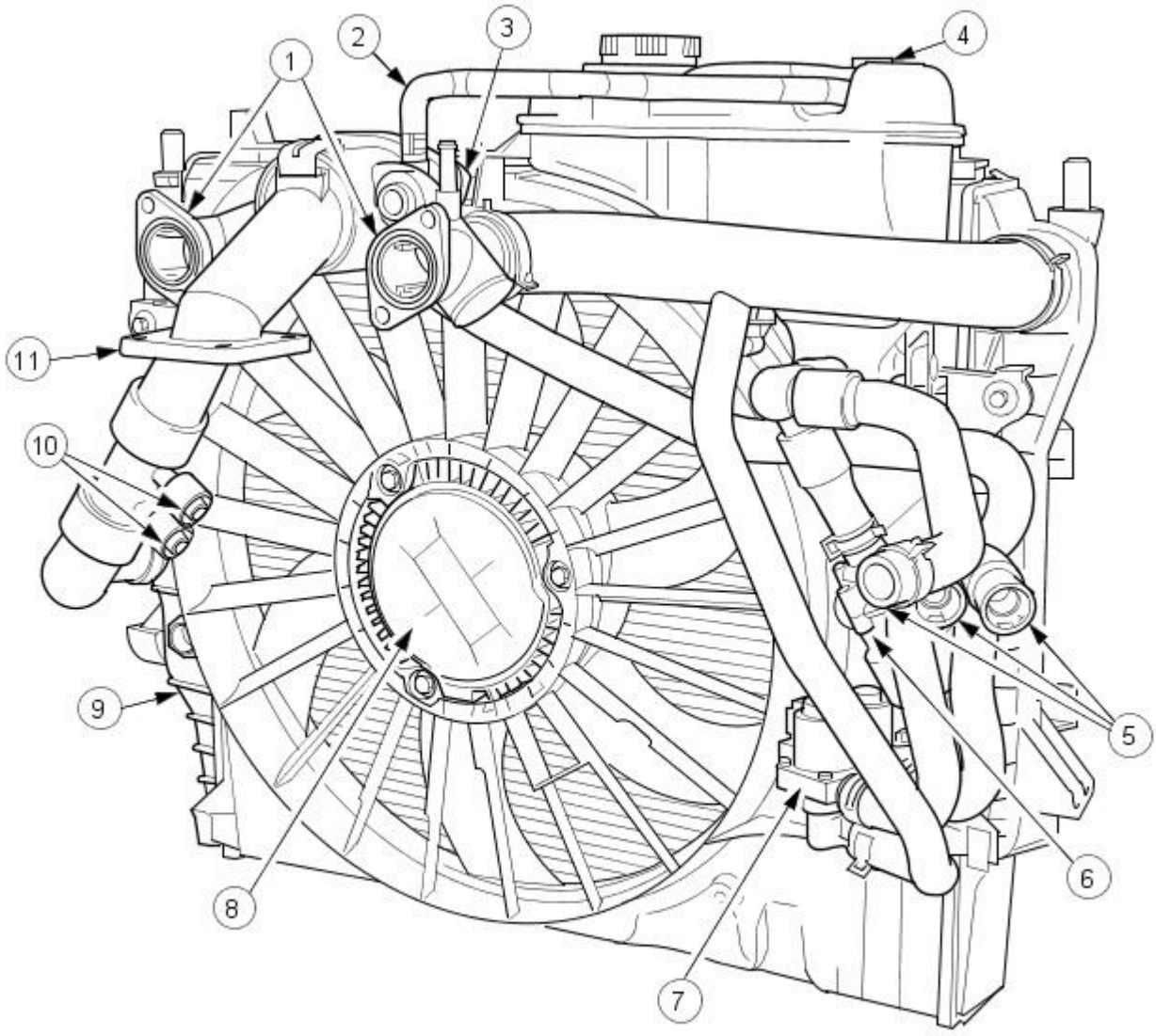


E30956

| Item | Part Number | Description |
|---|---|---|
| 1 | — | Engine coolant outlet |
| 2 | — | Vent hose |
| 3 | — | Thermostat housing |
| 4 | — | Bleed screw |
| 5 | — | Heater hose connections |
| 6 | — | Auxillary coolant flow pump |
| 7 | — | Dual coolant flow valve |
| 8 | — | Cooling fan motor |
| 9 | — | Radiator |
| 10 | — | Engine oil cooler connections |
| 11 | — | Engine coolant inlet |

Vehicles with 4.2L engine with supercharger

GETtheMANUALS.org

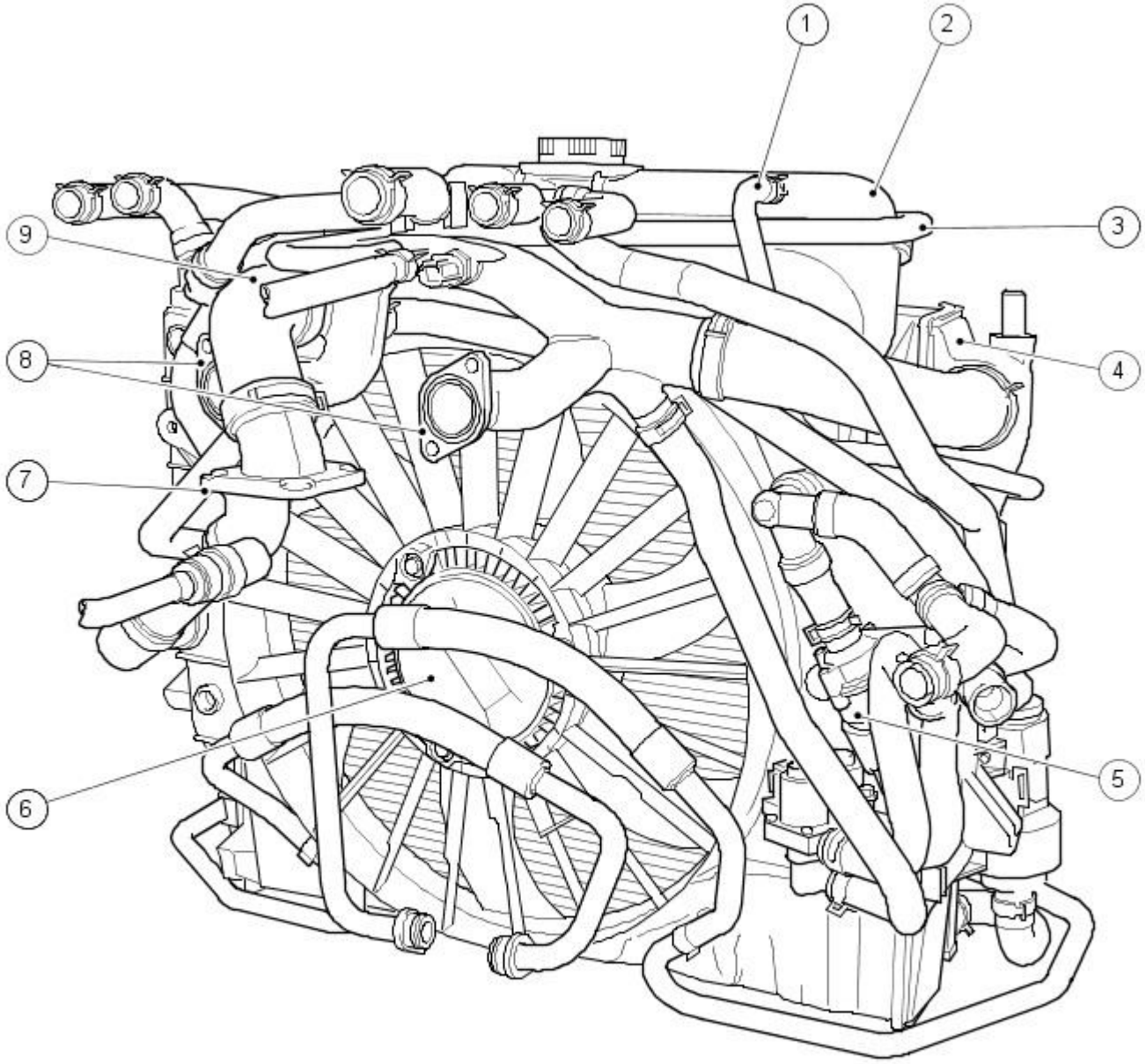


E30954

| Item | Part Number | Description |
|---|---|---|
| 1 | - | Vent hose (SC radiator) |
| 2 | — | Coolant expansion tank |
| 3 | — | Vent hose |
| 4 | — | Radiator |
| 5 | — | Auxillary coolant flow pump |
| 6 | — | Cooling fan motor |
| 7 | — | Engine coolant inlet |
| 8 | — | Engine coolant outlet |
| 9 | — | Thermostat housing |

• WARNINGS:

Never remove the coolant pressure cap under any circumstances while the engine is operating. Failure to follow this instruction may result in personal injury.

To avoid having scalding hot coolant or steam blow out of the cooling system, use extreme care when removing the coolant pressure cap from a hot cooling system. Wait until the engine has cooled, then wrap a thick cloth around the coolant pressure cap and turn it slowly until the pressure begins to release. Step back while the pressure is released from the system. When certain all the pressure has been released (still with a cloth) turn and remove the coolant pressure cap from the coolant expansion tank. Failure to follow these instructions may result in personal injury.

To avoid the possibility of personal injury, do not operate the engine with the hood open until the fan blades have been examined for cracks and separation. Failure to follow this instruction may result in personal injury.

Remove fuse 38 from the engine compartment fuse box prior to performing any under hood service in the area of the cooling fan when the engine is hot, since the cooling fan motor could operate if the engine has been switched OFF. Failure to follow this instruction may result in personal injury.

• CAUTIONS:

GETtheMANUALS.org

The engine cooling system must be maintained with the correct concentration and type of anti-freeze solution to prevent corrosion and frost damage.

Never remove the coolant pressure cap under any circumstances while the engine is operating. Failure to follow this instruction may result in damage to the engine.

The cooling system consists of the following:

- Radiator
- Coolant pressure cap
- Thermostat
- Water pump
- Electric cooling fan
- Coolant expansion tank
- Engine oil cooler

## Water Pump

The water pump is of a conventional design and is driven by the crankshaft pulley through the accessory drive belt. The water pump belt tension is maintained by an automatic drive belt tensioner.
For additional information, refer to Section 303-05 Accessory Drive.

## Thermostat

The thermostat is located in the thermostat housing and allows rapid engine warm-up by restricting coolant flow through the radiator below 82°C (180°F). The thermostat also assists in keeping the engine operating temperature within predetermined limits. On the 4.2L supercharged engine the thermostat begins to open at 84°C (183°F) and is fully open at 98°C (208°F), on the 4.2L and 2.5 or 3.0L engine the thermostat begins to open at 88°C - 92°C (190°F - 198°F) and is fully open at 102°C (216°F).

When the engine is cold and the thermostat is closed, coolant flows from the water pump through the engine. It then returns to the water pump through the upper coolant hose.

When the engine is warm and the thermostat is open, coolant flows into the radiator through the upper coolant hose. It then returns to the water pump from the radiator through the lower coolant hose and engine oil cooler.

The heater core is on a parallel circuit and is unaffected by the position of the thermostat.

## Radiator

The radiator is of aluminium construction with plastic end tanks. Foam seals are fitted to the radiator to prevent the cooling air from by passing the radiator core. A coolant drain plug is provided in the lower coolant end tank of the radiator for the draining of the coolant. The Cooling fan shroud is attached to the radiator.

## Cooling Fan

A single, variable speed cooling fan motor is attached to a fan shroud located behind the radiator. The speed is determined by the Engine Coolant Temperature (ECT) and the air conditioning pressure and transmission oil temperature.

Under hot operating conditions, the fan may continue to operate for four minutes after the engine has been switched off.

## Engine Block Heater

For vehicle markets subject to very cold climate conditions, an engine block heater for connection to an external mains power supply, is fitted in place of the engine block drain plug.

## Coolant Recovery System

A pressurized coolant expansion tank system is used which continuously separates the air from the cooling system and replenishes the system through the coolant expansion tank outlet hose, attached to the heater return hose.

A continuous vent from the engine and radiator to the coolant expansion tank prevents air locks from forming in the cooling system.

Manual bleed points are provided on the coolant reservoir.

The coolant expansion tank serves as the location for:

- Service fill.
- Coolant expansion during warm-up.
- Air separation during operation.
- System pressurization by the coolant pressure cap.
- The coolant expansion tank is designed to have approximately 0.5 to 1 liter of air when cold to allow for coolant expansion.

## Engine Oil Cooler

The engine oil cooler is a Modine oil to water type. The oil cooler on the 2.5 or 3.0L engine is located on the left-hand side of the engine and is fitted to the oil filter housing. The oil cooler on the 4.2L engine is located at the front of the engine and is fitted between the oil filter housing and the oil filter.

The coolant supply for the engine oil cooler is through the radiator bottom hose.

## Engine Coolant

The long life engine coolant is formulated to last for five years or 240,000 km (150,000 miles). The coolant is silicate free and orange in color. The long life engine coolant must not be mixed with conventional engine coolant.

## Vehicles with 2.5L or 3.0L engine

GETtheMANUALS.org

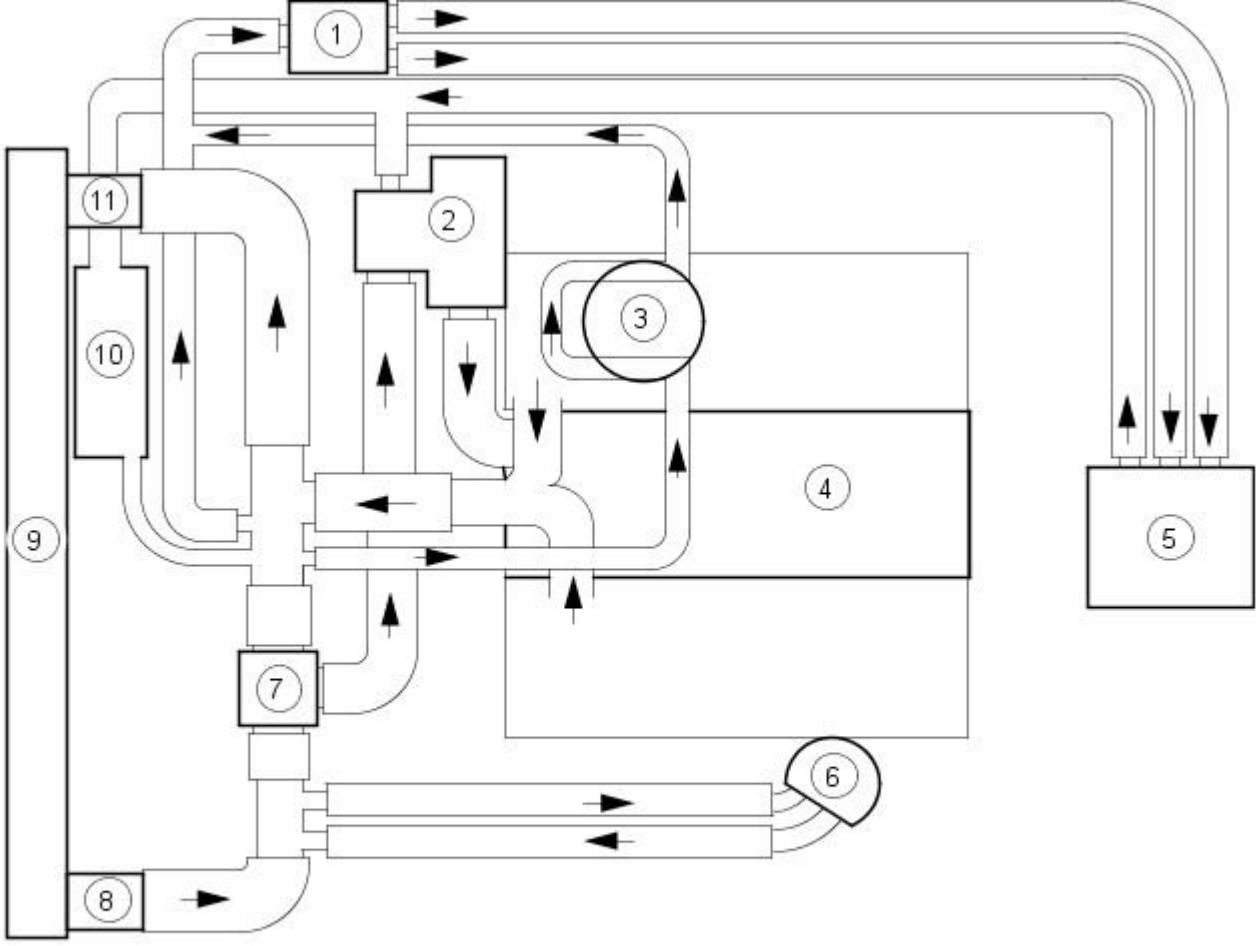


E 30957

| Item | Part Number | Description |
|---|---|---|
| 1 | — | Dual coolant flow valve |
| 2 | — | Water pump |
| 3 | — | Throttle body |
| 4 | — | V6 engine |
| 5 | — | Heater core |
| 6 | — | Engine oil cooler |
| 7 | — | Thermostat |
| 8 | — | Lower hose |
| 9 | — | Radiator |
| 10 | — | Coolant expansion tank |
| 11 | — | Upper hose |
| 12 | — | Top hose |

**Vehicles with 4.2L engine**

GETtheMANUALS.org

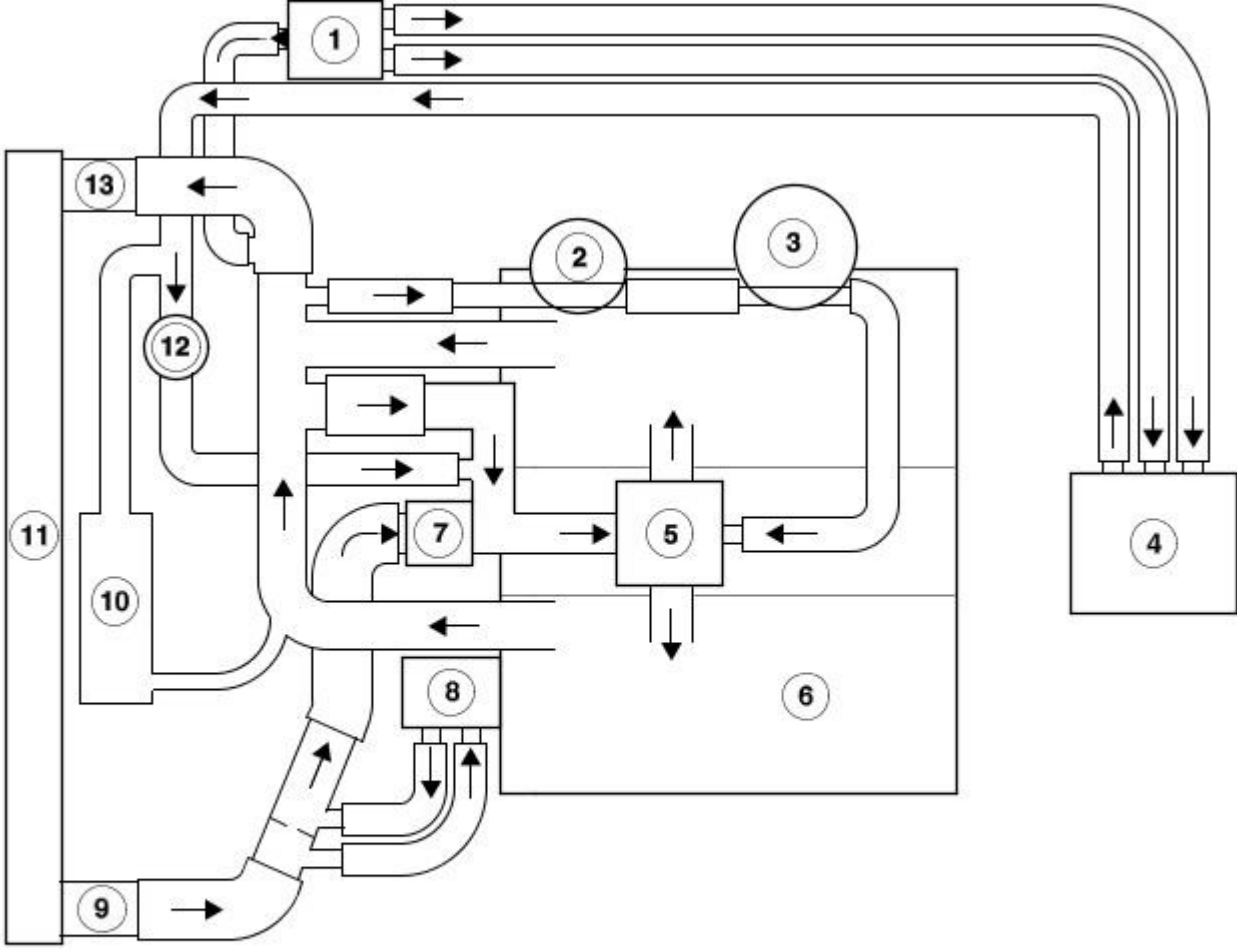


E30953

| Item | Part Number | Description |
|---|---|---|
| 1 | — | Dual coolant flow valve |
| 2 | — | EGR valve |
| 3 | — | Throttle body |
| 4 | — | Heater core |
| 5 | — | Water pump |
| 6 | — | Engine bank (left-hand) |
| 7 | — | Thermostat |
| 8 | — | Engine oil cooler |
| 9 | — | Lower hose |
| 10 | — | Coolant expansion tank |
| 11 | — | Radiator |
| 12 | — | Auxiliary coolant flow pump |
| 13 | — | Upper hose |

**Vehicles with 4.2L engine with supercharger**

GETtheMANUALS.org

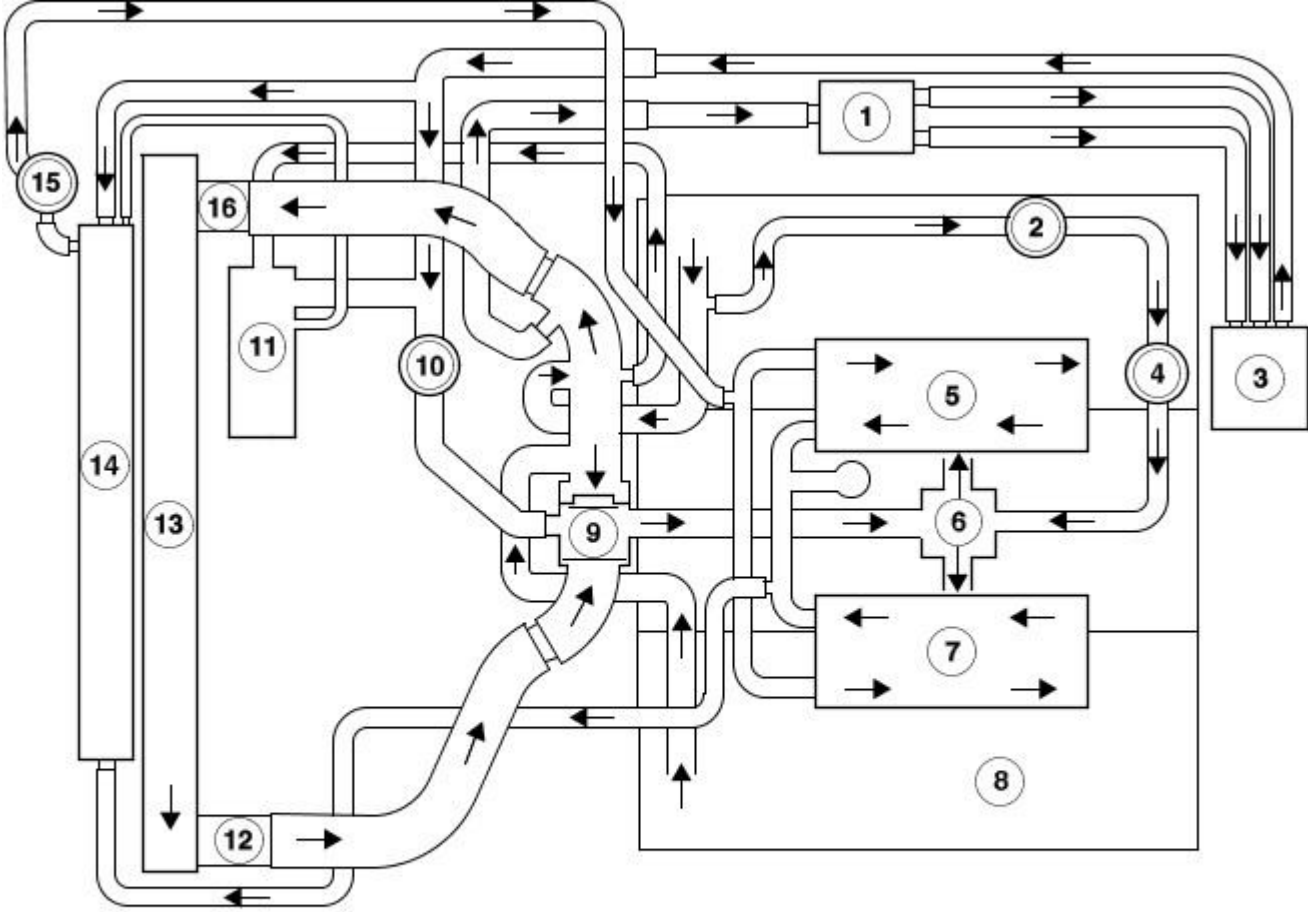


E30955

| Item | Part Number | Description |
|---|---|---|
| 1 | - | Dual coolant flow valve |
| 2 | - | EGR valve |
| 3 | - | Heater core |
| 4 | - | Throttle body |
| 5 | - | Charge air cooler (right-hand) |
| 6 | - | Water pump |
| 7 | - | Charge air cooler (left-hand) |
| 8 | - | Engine bank (left-hand) |
| 9 | - | Thermostat |
| 10 | - | Auxiliary coolant flow pump |
| 11 | - | Coolant expansion tank |
| 12 | - | Lower hose |
| 13 | - | Radiator |
| 14 | - | SC radiator |
| 15 | - | SC coolant pump |
| 16 | - | Upper hose |

GETtheMANUALS.org

# Engine Cooling - V8 4.2L Petrol / V8 S/C 4.2L Petrol / 2.5L NA V6 - AJV6 / 3.0L NA V6 - AJ27 - Engine Cooling

Diagnosis and Testing

1. **1.** Verify the customer concern.
2. **2.** Visually inspect for obvious signs of mechanical or electrical damage.

**Visual Inspection Chart**

| Mechanical | Electrical |
|---|---|
| Leaks | Fuse |
| Coolant expansion tank | Wiring harness |
| Electric fan | Loose or corroded connector(s) |
| Radiator | Engine cooling temperature (ECT) sensor or Engine cylinder head temperature (CHT) sensor |

3. **3.** If an obvious cause for an observed or reported concern is found, correct the cause (if possible) before proceeding to the next step.
4. **4.** If the concern is not visually evident, verify the symptom and refer to symptom chart.

**Symptom Chart**

| DTC | Condition | Possible Source | Action |
|---|---|---|---|
| P0116 | Concern with engine coolant temperature (range/performance) | • ECT sensor.<br>• ECT sensor circuit(s)<br>• Low/contaminated coolant<br>• Thermostat failure<br>• Overheating | REFER to Section 303-14A Electronic Engine Controls / 303-14B Electronic Engine Controls / 303-14C Electronic Engine Controls.For V6 vehicles, REFER to Section 303-14A Electronic Engine Controls / 303-14B Electronic Engine Controls / 303-14C Electronic Engine Controls. For V8 Vehicles. |
| P0117 | Concern with engine coolant temperature (low input) | • ECT sensor<br>• ECT sensor circuit (short to ground/open circuit) | REFER to Section 303-14A Electronic Engine Controls / 303-14B Electronic Engine Controls / 303-14C Electronic Engine Controls.For V6 vehicles, REFER to Section 303-14A Electronic Engine Controls / 303-14B Electronic Engine Controls / 303-14C Electronic Engine Controls. For V8 Vehicles. |
| P0118 | Concern with engine coolant temperature (high input) | • ECT sensor<br>• ECT sensor circuit (short to ground/open circuit) | REFER to Section 303-14A Electronic Engine Controls / 303-14B Electronic Engine Controls / 303-14C Electronic Engine Controls.For V6 vehicles, REFER to Section 303-14A Electronic Engine Controls / 303-14B Electronic Engine Controls / 303-14C Electronic Engine Controls. For V8 Vehicles. |
| P0125 | Concern with engine coolant temperature (insufficient for close loop control) | • ECT sensor<br>• ECT sensor circuit (short to ground/open circuit) | REFER to Section 303-14A Electronic Engine Controls / 303-14B Electronic Engine Controls / 303-14C Electronic Engine Controls.For V6 vehicles, REFER to Section 303-14A Electronic Engine Controls / 303-14B Electronic Engine Controls / 303-14C Electronic Engine Controls. For V8 Vehicles. |
| P1474 | Concern with engine coolant temperature | Water pump malfunction | REFER to Water Pump-2.5L/3.0L / Water Pump-4.2L, Vehicles With: Supercharger / Water Pump-4.2L, Vehicles Without: Supercharger in this section. |
| None | Concern with coolant loss | • Hoses.<br>• Hose connections.<br>• Radiator.<br>• Water pump.<br>• Heater core.<br>• Gaskets.<br>• Engine casting cracks.<br>• Engine block core plugs. | GO to Pinpoint Test A. |
| None | Concern with overheating | • Engine coolant. (Level/condition).<br>• Thermostat.<br>• Fan motor.<br>• Fan motor fuses and/or circuits.<br>• ECT sensor.<br>• engine control module (ECM).<br>• Fan speed module. | GO to Pinpoint Test B. |
| None | Concern with engine not reaching normal temperature | • Thermostat.<br>• Electric fan.<br>• Fan speed module. | GO to Pinpoint Test C. |

| PINPOINT TEST A : LOSS OF COOLANT | |
|---|---|
| **TEST CONDITIONS** | **DETAILS/RESULTS/ACTIONS** |
| **A1: VISUAL INSPECTION** | |
| | 1 Visually inspect for loss of coolant |
| | 2 Carry out a system pressure test. See component tests in this section. |
| | Is the engine cooling system leaking?<br>**Yes**<br>Rectify the leak as indicated by the test result.<br>REFER to Engine Cooling / Cooling System Draining, Filling and Bleeding in this section.<br>TEST the system for normal operation.<br>**No**<br>Verify the customer complaint. |

GETtheMANUALS.org

| PINPOINT TEST B : THE ENGINE OVERHEATS |
|---|

| TEST CONDITIONS | DETAILS/RESULTS/ACTIONS |
|---|---|
| **B1: CHECK COOLANT** | |
| WARNING: The cooling system is pressurised! Make sure the reservoir cap is never released until the system has cooled. Failure to follow these instructions may result in personal injury. | |
| | 1 Check the coolant level and condition. |
| | Does the system contain sufficient coolant of the correct specification?<br>**Yes**<br>GO to B2.<br>**No**<br>Top-up the system.<br>REFER to Cooling System Draining, Filling and Bleeding in this section.<br>Check for coolant loss. GO to Pinpoint Test A. |
| **B2: CHECK THERMOSTAT** | |
| | 1 Check the thermostat.<br>REFER to Thermostat-2.5L/3.0L /<br>Thermostat-4.2L, Vehicles With: Supercharger /<br>Thermostat-4.2L, Vehicles Without: Supercharger in this section.<br>See component tests in this section. |
| | Is the thermostat OK?<br>**Yes**<br>REFER to Section 303-14A Electronic Engine Controls / 303-14B Electronic Engine Controls / 303-14C Electronic Engine Controls. Cooling fans, modules, circuits, sensors, etc are tested in this section.<br>**No**<br>INSTALL a new thermostat.<br>REFER to Thermostat-2.5L/3.0L /<br>Thermostat-4.2L, Vehicles With: Supercharger /<br>Thermostat-4.2L, Vehicles Without: Supercharger /<br>Cooling System Draining, Filling and Bleeding in this section.<br>TEST the system for normal operation. |

| PINPOINT TEST C : THE ENGINE DOES NOT REACH NORMAL OPERATING TEMPERATURE | |
|---|---|
| TEST CONDITIONS | DETAILS/RESULTS/ACTIONS |
| **C1: CHECK THERMOSTAT** | |
| | 1 Check the thermostat.<br>REFER to Thermostat-2.5L/3.0L /<br>Thermostat-4.2L, Vehicles With: Supercharger /<br>Thermostat-4.2L, Vehicles Without: Supercharger in this section.<br>See component tests in this section. |
| | Is the thermostat OK?<br>**Yes**<br>REFER to Section 303-14A Electronic Engine Controls / 303-14B Electronic Engine Controls / 303-14C Electronic Engine Controls. Cooling fans, modules, circuits, sensors, etc are tested in this section.<br>**No**<br>INSTALL a new thermostat.<br>REFER to Thermostat-2.5L/3.0L /<br>Thermostat-4.2L, Vehicles With: Supercharger /<br>Thermostat-4.2L, Vehicles Without: Supercharger /<br>Cooling System Draining, Filling and Bleeding in this section.<br>TEST the system for normal operation. |

## Component Tests

### Pressure Test

WARNING: Never remove the coolant expansion tank cap under any circumstances while the engine is operating. Failure to follow these instructions may result in damage to the cooling system or engine and/or personal injury. To avoid having scalding hot water or steam blow out of the cooling system, use extreme care when removing the coolant expansion tank cap from a hot cooling system. Wait until the engine has cooled, then wrap a thick cloth around the coolant expansion tank cap and turn it slowly until the pressure begins to release, step back while the pressure is released from the system. When certain all the pressure has been released (still with a cloth) turn and remove the coolant expansion tank cap. Failure to follow these instructions may result in personal injury.

1. **1.** Switch the engine off.
2. **2.** Open the hood and install protective fender covers.
3. **3.** Carefully remove the coolant expansion tank cap from the coolant expansion tank to relieve pressure in the cooling system. Add coolant to coolant expansion tank as necessary.
4. **4.** Install the adapter fitting from Pressure Tester tightly between overflow/air purge nipple and overflow/air purge hose at the coolant expansion tank. Reinstall the coolant expansion tank cap.
5. **5.** Attach the pressure pump and gauge to the adapter fitting and pressurize the cooling system to the coolant expansion tank cap lower limit. Refer to Specification.
6. **6.** Pressurize the cooling system. Observe the gauge reading for approximately two minutes. Pressure should not drop during this time.
   - If system holds pressure, proceed to step 8.
   - If the pressure drops, check for leaks at the engine to heater core hoses, engine to radiator hoses, bypass hose, water valve hose (if applicable), thermostat housing gasket, radiator and heater core, etc. Also refer to engine system checks if a leak cannot be located in the cooling system. Correct any leaks found and recheck the system.
7. **7.** Release the system pressure by loosening the coolant expansion tank cap. Check the coolant level. Replenish as necessary with the correct coolant solution.
8. **8.** Check the radiator overflow hose for any obstructions which may block the flow of coolant either to or from the coolant expansion tank.

GETtheMANUALS.org

9. **9.** Conduct the expansion tank cap Pressure Test in this section.

## Coolant Expansion Tank Pressure Cap Pressure Test

WARNING: Never remove the coolant expansion tank cap under any circumstances while the engine is operating. Failure to follow these instructions may result in damage to the cooling system or engine and/or personal injury. To avoid having scalding hot water or steam blow out of the cooling system, use extreme care when removing the coolant expansion tank cap from a hot cooling system. Wait until the engine has cooled, then wrap a thick cloth around the coolant expansion tank cap and turn it slowly until the pressure begins to release, step back while the pressure is released from the system. When certain all the pressure has been released (still with a cloth) turn and remove the coolant expansion tank cap. Failure to follow these instructions may result in personal injury.

1. **1.** Remove the expansion tank cap from the radiator coolant expansion tank.
2. **2.** Use water to clean in area of rubber seal and vacuum relief valve. Immerse expansion tank cap in water and install expansion tank cap pressure test adapter from Pressure Tester on the expansion tank cap.
3. • NOTE: If the plunger of the pump is depressed too quickly, an erroneous pressure reading will result.

   **3.** Slowly depress the plunger of the pressure test pump until the pressure gauge reading stops increasing, and note highest pressure reading obtained.
4. **4.** Release pressure by turning the pressure relief screw counterclockwise. Then tighten the pressure relief screw and repeat Step 5 at least twice to make sure the pressure test reading is repeatable and within acceptable gauge reading limits of thew expansion tank cap.
5. **5.** If the pressure test gauge readings are not within acceptable gauge reading limits, install a new expansion tank cap.

## Thermostat Test, Mechanical

Remove and inspect the thermostat, note its opening temperature and immerse it in water. Heat the water until this temperature is reached. The thermostat should begin to open. If it does not begin to open, install a new thermostat. Continue to heat the water until the thermostat fully opens, 5.8 mm (0.2in) or more off the valve seat. If it does not fully open, install a new thermostat.

## Radiator Leak Test, Removed From the Vehicle

CAUTION: Do not leak test an aluminium radiator in the same water that is used to leak test copper/brass radiators. Flux and caustic cleaners may be present in the test water which will corrode aluminium.

Clean the radiator before leak testing to prevent contamination of the test tank. Leak test the radiator in clean water with 138 kPa (20 psi) air pressure.

A separate clean test tank is recommended for aluminium radiators. If a separate tank is not available for aluminium radiator testing, rinse the test tank each time before testing an aluminium radiator.

GETtheMANUALS.org

# Engine Cooling - V8 4.2L Petrol / V8 S/C 4.2L Petrol / 2.5L NA V6 - AJV6 / 3.0L NA V6 - AJ27 - Cooling System Backflushing

General Procedures

• CAUTIONS:

The heater core must be backflushed separately from the engine cooling system to prevent the engine cooling system particles from clogging the heater core tubes and reducing (or eliminating) coolant flow through the heater core.

All engine cooling system flushing and backflushing procedures must include a separate backflushing of the heater core after the flushing or backflushing of the engine cooling system.

Heater core internal pressure must not exceed 100 kPa (14.5 psi). Failure to follow this instruction may cause damage to the heater core.

• NOTE: Cooling system backflushing should be carried out before the cooling system components are installed after the cooling system flushing procedure.

1. Disconnect the heater outlet coolant hose from the engine and connect the heater hose to a suitable hose pipe.
2. Disconnect the heater inlet coolant hose from the engine and allow the coolant to drain into a suitable container.
3. Turn the water supply valve to the hose ON and allow water pressure to flow through the heater core.
4. Allow water pressure to flow through the heater core for approximately five minutes.
5. Turn the water supply valve to the hose OFF and disconnect the hose pipe from the heater hose.
6. Connect the heater inlet coolant hose to the engine.
7. Connect the heater outlet coolant hose to the engine.
8. Fill the cooling system as described using a 50% mixture of Jaguar Premium Cooling System Fluid, or equivalent meeting Jaguar specification WSS M97B44-D and 50% distilled water.
9. Test the system for correct heater performance with the specified engine cooling system conditions.

## Radiator Backflushing

1. Remove the radiator.
   For additional information, refer to Radiator in this section.
2. Invert the radiator.
3. Connect a suitable hose pipe to the lower coolant hose connection of the radiator.
4. Turn the water supply valve to the hose ON and allow water pressure to flow through the radiator.
5. Allow water pressure to flow through the radiator for approximately five minutes.
6. Turn the water supply valve to the hose OFF and disconnect the hose pipe from the radiator.
7. Allow the coolant to drain from the radiator.
8. Install the radiator.
   For additional information, refer to Radiator in this section.

## Engine Backflushing

1. Remove the thermostat before backflushing the engine.
   For additional information, refer to Thermostat in this section.
2. Position the high-pressure water hose into the engine through the engine return and backflush the engine.
3. Connect a suitable hose pipe to the upper coolant hose connection of the engine.
4. Turn the water supply valve to the hose ON and allow water pressure to flow through the engine.
5. Allow water pressure to flow through the engine for approximately five minutes.
6. Turn the water supply valve to the hose OFF and disconnect the hose pipe from the upper coolant hose connection of the engine.
7. Connect the upper coolant hose to the engine.
8. Fill the cooling system as described using a 50% mixture of Jaguar Premium Cooling System Fluid or equivalent, meeting Jaguar specification WSS M97B44-D and 50% distilled water.

GETtheMANUALS.org

# Engine Cooling - V8 4.2L Petrol / V8 S/C 4.2L Petrol / 2.5L NA V6 - AJV6 / 3.0L NA V6 - AJ27 - Cooling System Draining, Filling and Bleeding

General Procedures

All Vehicles

**1.** WARNINGS:

Never remove the coolant pressure cap under any circumstances while the engine is operating. Failure to follow this instruction may result in personal injury.

To avoid having scalding hot coolant or steam blow out of the cooling system, use extreme care when removing the coolant pressure cap from a hot cooling system. Wait until the engine has cooled, then wrap a thick cloth around the coolant pressure cap and turn it slowly until the pressure begins to release. Step back while the pressure is released from the system. When certain all the pressure has been released (still with a cloth) turn and remove the coolant pressure cap from the coolant expansion tank. Failure to follow these instructions may result in personal injury.

To avoid the possibility of personal injury, do not operate the engine with the hood open until the fan blades have been examined for cracks and separation. Failure to follow this instruction may result in personal injury.

Remove fuse 38 from the engine compartment fuse box prior to performing any under hood service in the area of the cooling fan when the engine is hot, since the cooling fan motor could operate if the engine has been switched OFF. Failure to follow this instruction may result in personal injury.

• CAUTIONS:

The engine cooling system must be maintained with the correct concentration and type of anti-freeze solution to prevent corrosion and frost damage.

Never remove the coolant pressure cap under any circumstances while the engine is operating. Failure to follow this instruction may result in damage to the engine.

Relieve the cooling system pressure.

- Unscrew the coolant expansion tank cap slowly.

**2.** Remove the coolant expansion tank cap.

**3.** Remove the radiator splash shield.
For additional information, refer to Section 501-02 Front End Body Panels.

**4.** Remove the radiator lower cowl.

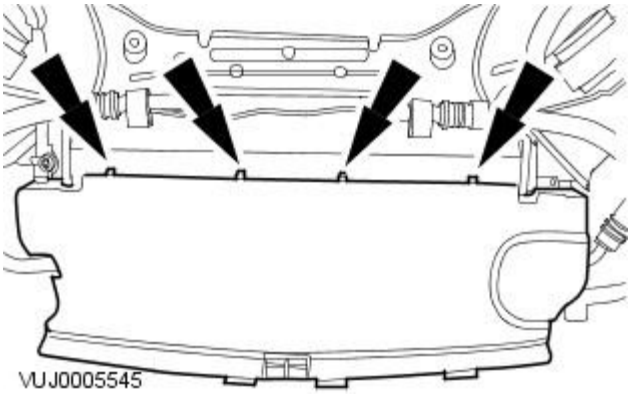


GETtheMANUALS.org

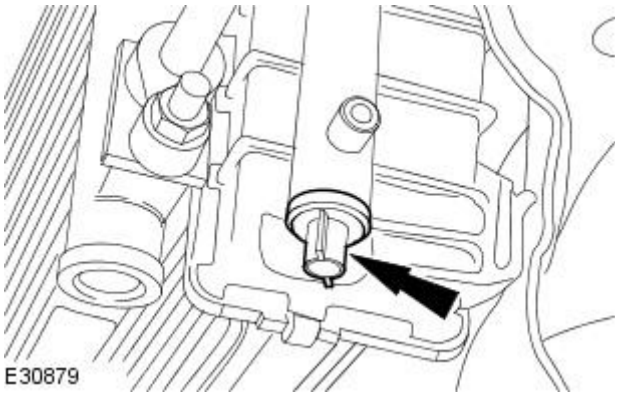


**5.** Remove the coolant drain plug.

- Drain the coolant into a suitable container.

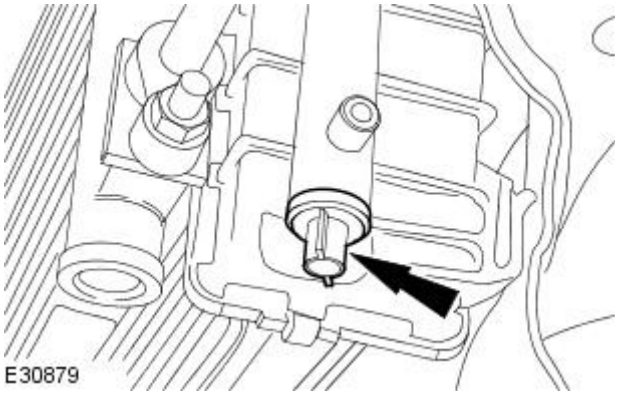


**6.** CAUTION: Do not over tighten the drain plug. Failure to follow this instruction may cause damage to the vehicle.

Install the drain plug when all coolant has drained.

- Tighten to 1 Nm.
- Remove the drain tray.

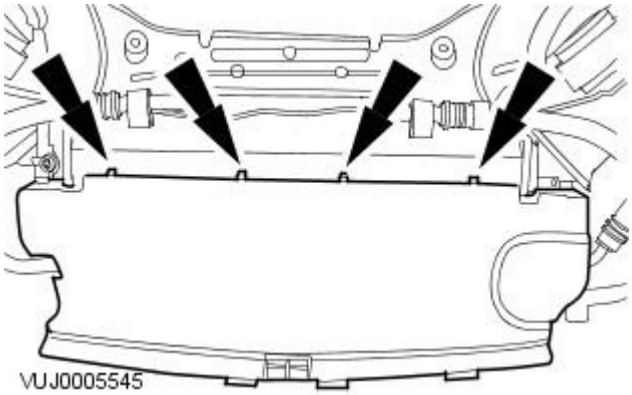


**7.** Install the radiator lower cowl.

**8.** Install the radiator splash shield.
For additional information, refer to Section 501-02 Front End Body Panels.

Vehicles without supercharger

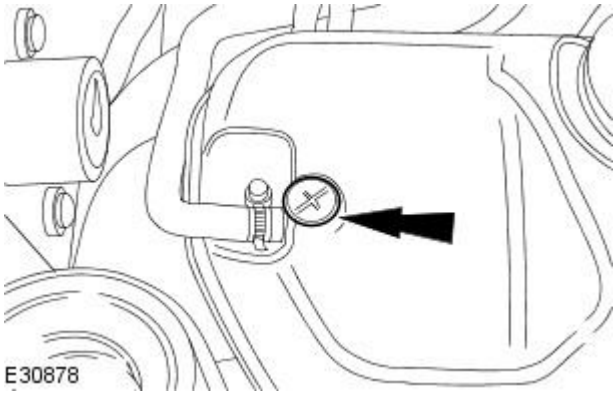


**9.** Remove the coolant expansion tank bleed screw.

**10.** Fill the cooling system up to the MAX mark on the coolant expansion tank using a fifty percent mixture of Jaguar Premium Cooling System Fluid or equivalent, meeting Jaguar specification WSS M97B44-D and fifty percent water.

GETtheMANUALS.org

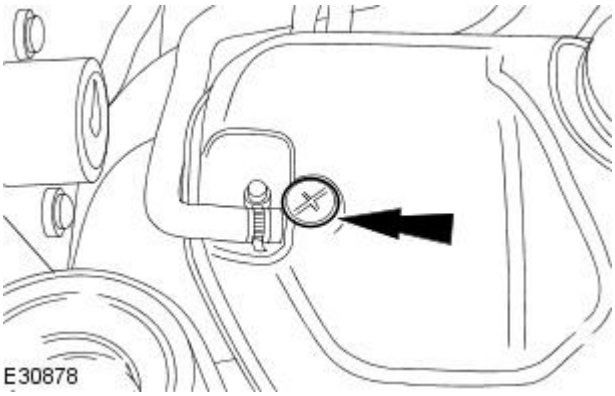


**11.** CAUTION: Do not over tighten the coolant expansion tank bleed screw. Failure to follow this instruction may cause damage to the vehicle

Install the coolant expansion tank bleed screw.

- Tighten to 1 Nm.

**12.** Install the coolant expansion tank pressure cap.

**13.** CAUTION: Do not RUN the engine with the coolant expansion tank pressure cap removed. Failure to follow this instruction may cause damage to the vehicle

START and RUN the engine.

**14.** SET the heating system to MAX heat, the blower motor to MAX speed and the air distribution to instrument panel registers.

**15.** CAUTION: Observe the engine temperature gauge. If the engine starts to over-heat switch off immediately and allow to cool. Failure to follow this instruction may cause damage to the vehicle.

Allow the engine to RUN until hot air is emitted from the instrument panel registers, while observing the engine temperature gauge.

**16.** Switch off the engine.

**17.** Allow the engine to cool.

**18.** Release the cooling system pressure.

- Remove the coolant expansion tank pressure cap.

**19.** Fill the cooling system up to the MAX mark on the coolant expansion tank using a fifty percent mixture of Jaguar Premium Cooling System Fluid or equivalent, meeting Jaguar specification WSS M97B44-D and fifty percent water.

**20.** Install the coolant expansion tank pressure cap.

GETtheMANUALS.org

# Engine Cooling - V8 4.2L Petrol / V8 S/C 4.2L Petrol / 2.5L NA V6 - AJV6 / 3.0L NA V6 - AJ27 - Cooling System Draining and Vacuum Filling

General Procedures

All vehicles

• NOTE: Vehicles fitted with supercharged engines shown, V8 NA and V6 engines similar.

**1.** WARNING: To avoid having scalding hot coolant or steam blowing out of the cooling system, use extreme care when removing the coolant pressure cap from a hot cooling system. Wait until the engine has cooled, then wrap a thick cloth around the coolant pressure cap and turn it slowly until the pressure begins to release. Step back while the pressure is released from the system. When certain all the pressure has been released (still with a cloth) turn and remove the coolant pressure cap from the coolant expansion tank. Failure to follow these instructions may result in personal injury.

• CAUTIONS:

The engine cooling system must be maintained with the correct concentration and type of anti-freeze solution to prevent corrosion and frost damage. Failure to follow this instruction may result in damage to the vehicle.

Engine coolant will damage the paint finished surfaces. If spilt, immediately remove the coolant and clean the area with water.

Set the heater controls to maximum HOT.

**2.** WARNING: Relieve the cooling system pressure by unscrewing the coolant pressure cap. Failure to follow this instruction may result in personal injury.

Remove the coolant expansion tank pressure cap.

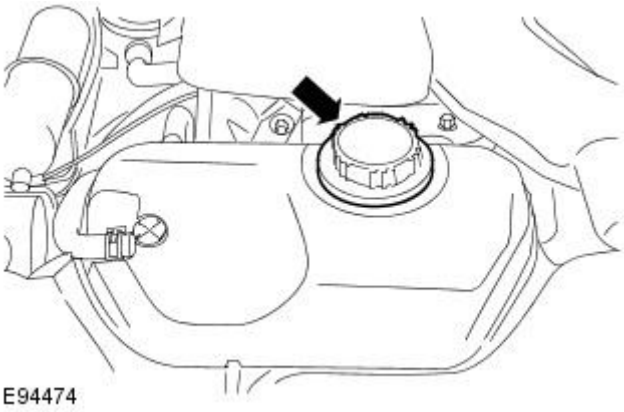


**3.** Remove the radiator splash shield.
For additional information, refer to: Radiator Splash Shield (501-02 Front End Body Panels, Removal and Installation).

**4.** NOTE: Remove and discard the radiator drain plug O-ring seal.

Remove the coolant drain plug.

- Drain the coolant into a suitable container.

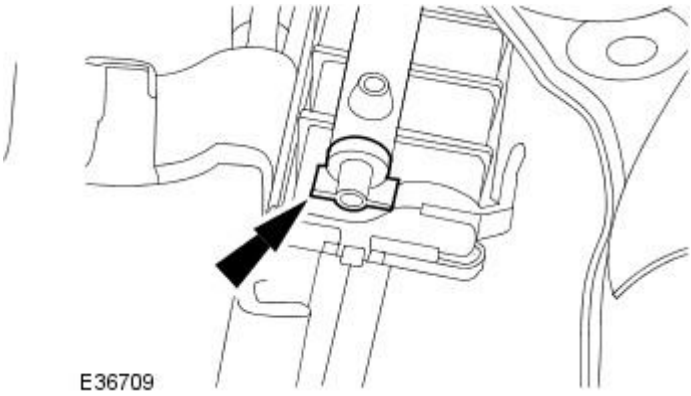


GETtheMANUALS.org

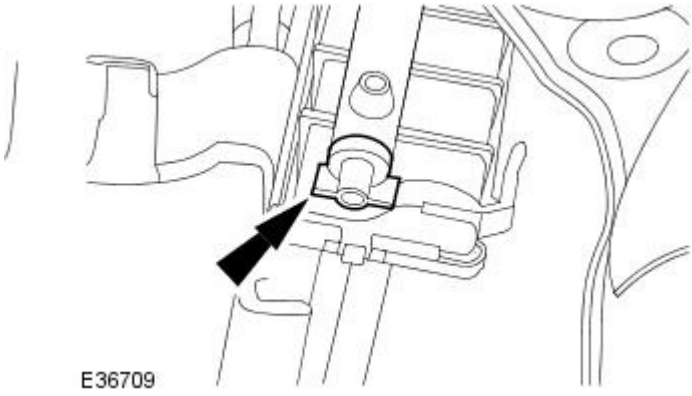


**5.** CAUTION: Do not over tighten the drain plug. Failure to follow this instruction may result in damage to the vehicle.

• NOTE: Install a new O-ring seal.

Install the coolant drain plug.

Vehicles with supercharger

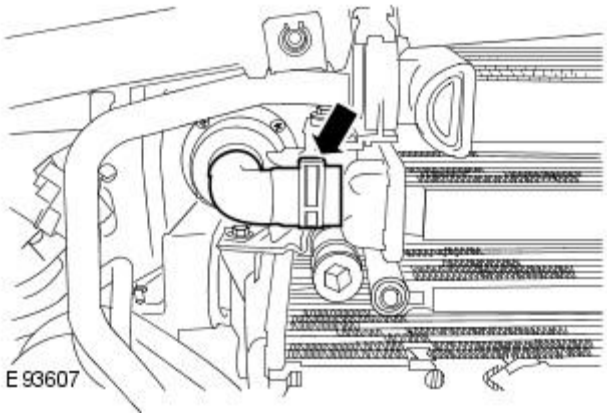


**6.** Disconnect the supercharger radiator bottom hose.

- Release the clip.
- Allow the coolant to drain.

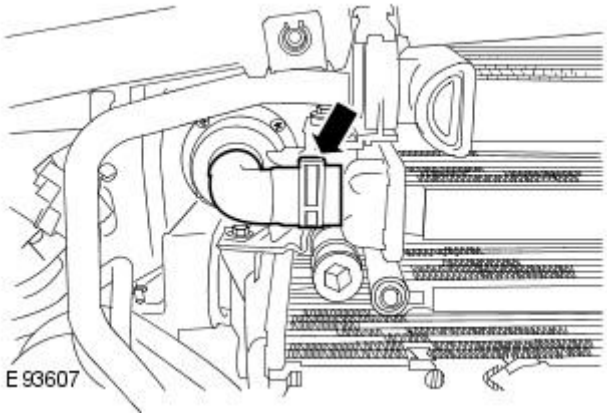


**7.** Connect the supercharger bottom hose.

- Secure the clip.

All vehicles

**8.** Remove the suitable container.

**9.** Lower the vehicle.

**10.** Install the cooling system vacuum refill adaptor to the expansion tank.

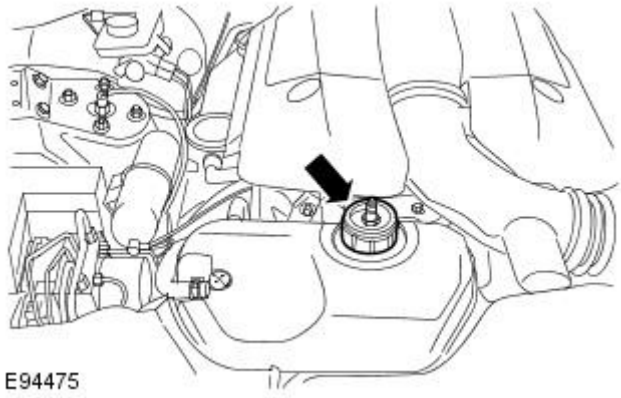


GETtheMANUALS.org

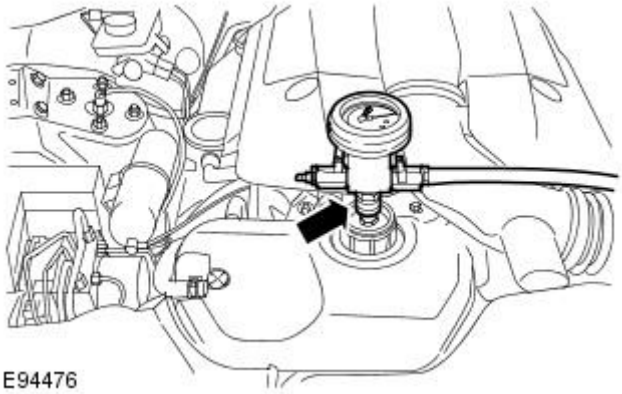


**11.** Install the vacuum filler gauge to the cooling system vacuum refill adaptor.

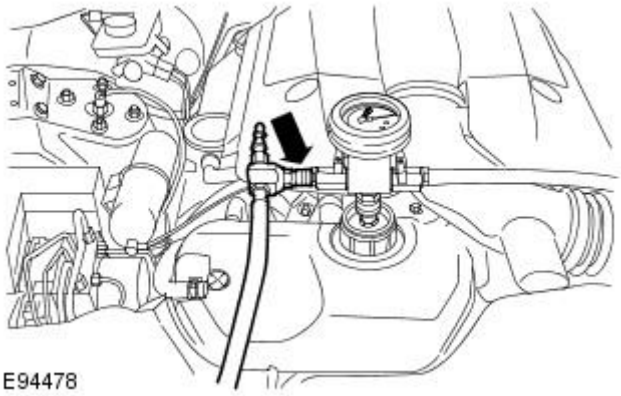


**12.** Install the venturi tube assembly to the vacuum filler gauge.

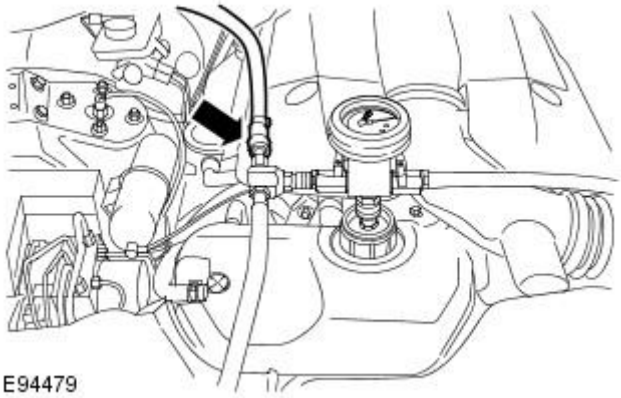


**13.** NOTE: Make sure that both valves are in the closed position on the vacuum filler gauge assembly.

• NOTE: The coolant vacuum fill tool needs an air pressure of 6 to 8 bar (87 to 116 psi) to operate correctly.

• NOTE: Small diameter or long airlines may restrict airflow to the coolant vacuum fill tool.

Connect a regulated compressed air supply to the venturi tube assembly.

**14.** NOTE: Make sure air cannot enter the hose.

Position the coolant pick-up pipe into a container of clean coolant.

**15.** Position the evacuated air hose into a container.

**16.** Open the air supply valve.

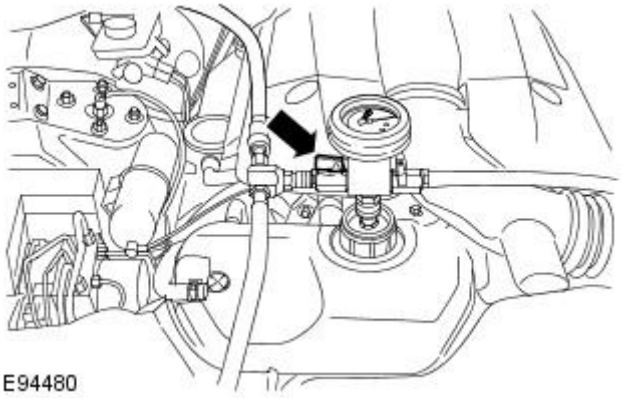


GETtheMANUALS.org

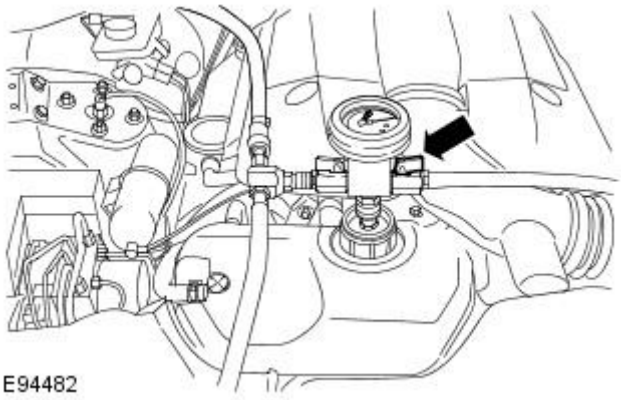


**17.** NOTE: Make sure the coolant supply hose is positioned into a container of fifty percent mixture of Jaguar Premium Cooling System Fluid or equivalent, meeting Jaguar specification WSS M97B44-D and fifty percent water. Make sure no air can enter the coolant supply hose.

Open the coolant supply valve for 2 seconds to prime the coolant supply hose.

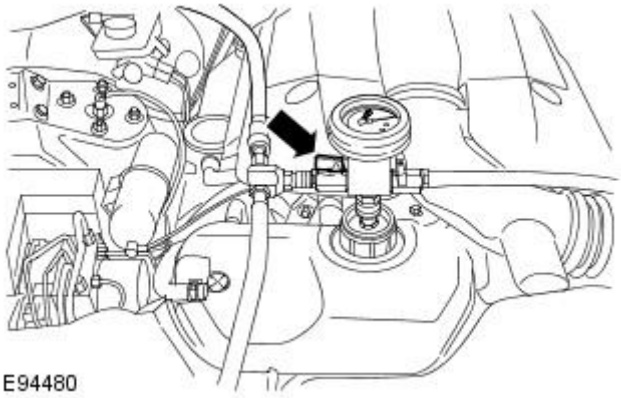


**18.** Apply air pressure progressively until the arrow on the vacuum filler gauge reaches the green segment.

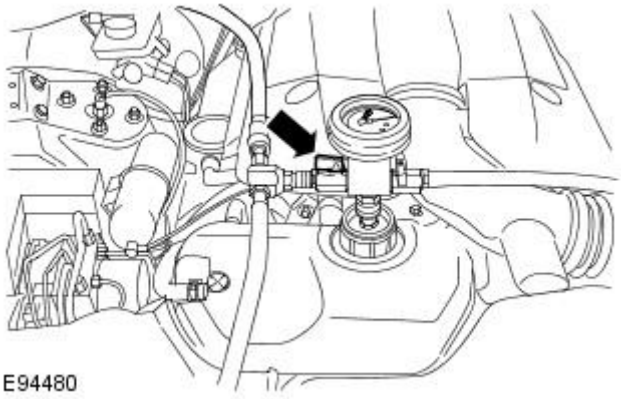


**19.** Close the air supply valve.

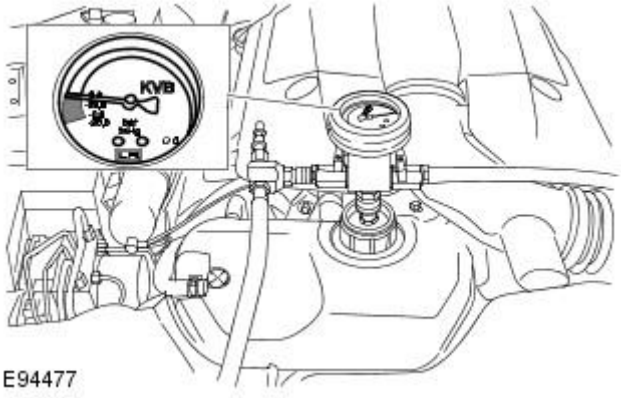


**20.** Allow one minute to check the vacuum is held.

- Disconnect the air supply.

GETtheMANUALS.org

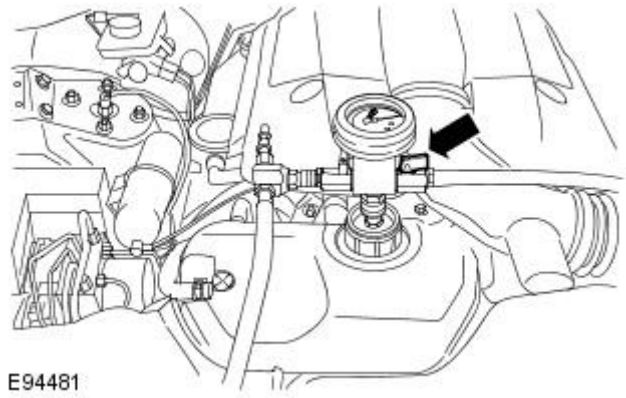


**21.** NOTE: Close the coolant supply valve when the coolant expansion tank MAX mark is reached or coolant movement has ceased.

Open the coolant supply valve and allow the coolant to be drawn into the system.

**22.** Remove the vacuum filler gauge and cooling system vacuum refill adaptor assembly.

**23.** Check and top up the cooling system if required.

**24.** Install the coolant expansion tank filler cap.

Vehicles with supercharger

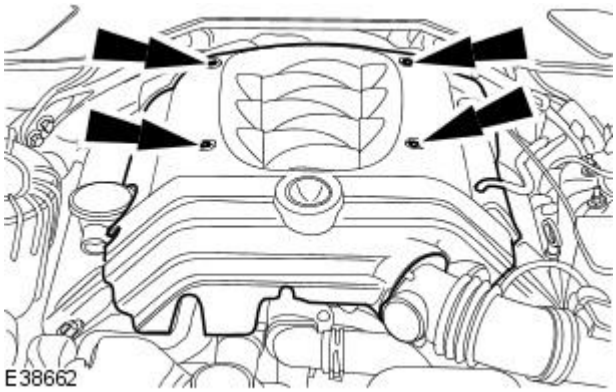


**25.** Remove the engine cover.

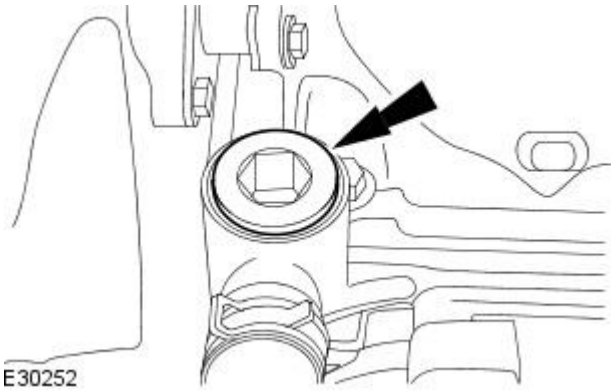


**26.** Remove the supercharger coolant filler plug.

- Remove and discard the sealing washer.

**27.** NOTE: Place a suitable cloth around supercharger fill port.

Top up the coolant through the supercharger fill port.

**28.** CAUTION: Coolant may spill from supercharger fill port when ignition switched on.

Switch ignition on.

**29.** CAUTION: Do not allow the supercharger water pump to run dry for more than one minute. Failure to follow this instruction may result in damage to the vehicle.

Allow the supercharger pump to run and top up the coolant through supercharger fill port.

**30.** Switch the ignition off.

GETtheMANUALS.org

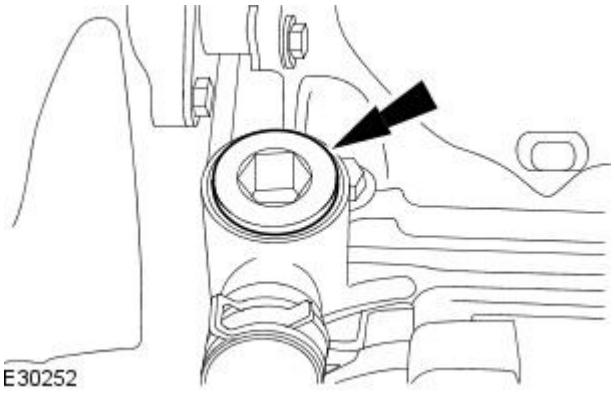


**31.** Install the supercharger coolant fill plug.

- Install a new sealing washer.
- Tighten to 45 Nm.
- Clean off any spillages.

**32.** Install the engine cover.

All vehicles

**33.** CAUTION: Do not RUN the engine with the coolant expansion tank pressure cap removed. Failure to follow this instruction may cause damage to the vehicle.

START and RUN the engine.

**34.** SET the heating system to MAX heat, the blower motor to MAX speed and the air distribution to instrument panel registers.

**35.** CAUTION: Observe the engine temperature gauge. If the engine starts to over-heat switch off immediately and allow to cool. Failure to follow this instruction may cause damage to the vehicle.

Allow the engine to RUN until hot air is emitted from the instrument panel registers, while observing the engine temperature gauge.

**36.** Switch off the engine.

**37.** Allow the engine to cool.

**38.** Check and top up the cooling system if required.

GETtheMANUALS.org

# Engine Cooling - V8 4.2L Petrol / V8 S/C 4.2L Petrol / 2.5L NA V6 - AJV6 / 3.0L NA V6 - AJ27 - Cooling System Flushing

General Procedures

Vehicles with 2.5L or 3.0L engine

1. Remove the air cleaner. For additional information, refer to Section 303-12A Intake Air Distribution and Filtering / 303-12B Intake Air Distribution and Filtering / 303-12C Intake Air Distribution and Filtering.

Vehicles with 4.2L engine

2. Remove the air cleaner. For additional information, refer to Section 303-12A Intake Air Distribution and Filtering / 303-12B Intake Air Distribution and Filtering / 303-12C Intake Air Distribution and Filtering.

All vehicles

3. Remove the thermostat.
   For additional information, refer to Thermostat in this section.
4. Detach the lower coolant hose from the radiator and position to one side.

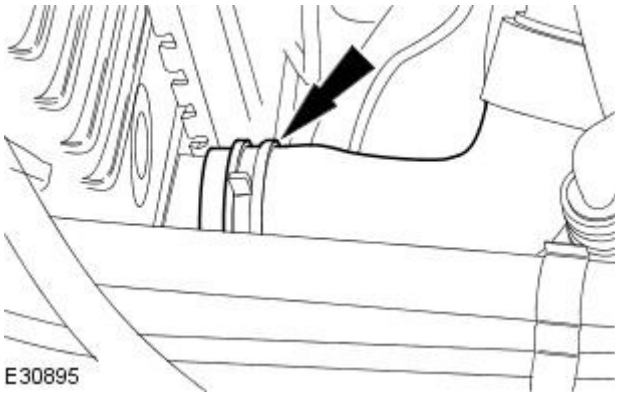


5. Detach the upper coolant hose from the radiator.

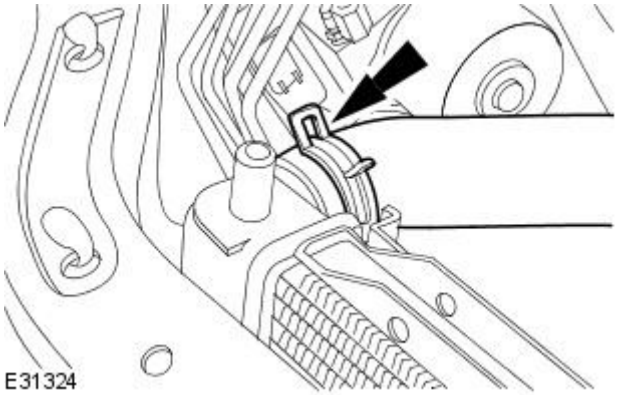


• NOTE: To remove rust, sludge and other foreign material from the cooling system, use Premium Cooling System flush, meeting Jaguar specification EGR-M14P7-A, which is safe for use with aluminium cooling systems. This cleaning restores cooling system efficiency and helps prevent overheating.

• NOTE: In severe cases where cleaning solvents will not properly clean the cooling system, it will be necessary to use the pressure flushing method using Cooling System Flusher, 164-R3670 to restore efficient operation.

• NOTE: A pulsating or reversed direction of flushing water will loosen sediment more quickly than a steady flow in the normal coolant flow direction.

• NOTE: Dispose of old coolant and flushing water contaminated with coolant and cleaning chemicals in accordance with local, state and federal laws.

6. Connect a hose pipe to the radiator upper coolant hose connection using a suitable connector.
7. CAUTION: Radiator internal pressure must not exceed 100 kPa (14.5 psi). Failure to follow this instruction may cause damage to the radiator.

   Flush the radiator using the hose pipe until the coolant flowing from the radiator lower coolant hose connection is clear.
8. Remove the hose pipe from the radiator upper coolant hose connection.
9. Connect a hose pipe to the upper coolant hose using a suitable connector.
10. Flush the engine using the hose pipe until the coolant flowing from the radiator lower coolant hose is clear.
11. Remove the hose pipe from the upper coolant hose connection.
12. Connect the upper coolant hose to the radiator.

GETtheMANUALS.org

13. Connect the lower coolant hose to the radiator.

14. Install the thermostat.
For additional information, refer to Thermostat in this section.

15. Fill the cooling system.
For additional information, refer to Cooling System Draining, Filling and Bleeding in this section.

Vehicles with 2.5L or 3.0L engine

16. Install the air cleaner. For additional information, refer to Section 303-12A Intake Air Distribution and Filtering / 303-12B Intake Air Distribution and Filtering / 303-12C Intake Air Distribution and Filtering.

Vehicles with 4.2L engine

17. Install the air cleaner. For additional information, refer to Section 303-12A Intake Air Distribution and Filtering / 303-12B Intake Air Distribution and Filtering / 303-12C Intake Air Distribution and Filtering.

GETtheMANUALS.org

# Engine Cooling - V8 4.2L Petrol / V8 S/C 4.2L Petrol / 2.5L NA V6 - AJV6 / 3.0L NA V6 - AJ27 - Coolant Expansion Tank

Removal and Installation

## Removal

Vehicles without supercharger

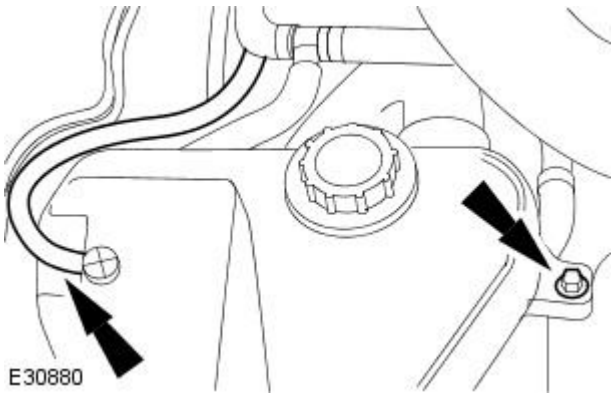


**1.** NOTE: Cap the vent hose to minimize coolant loss.

Detach the coolant expansion tank.

- Detach the vent hose.
- Remove the coolant expansion tank retaining bolt.

Vehicles with supercharger

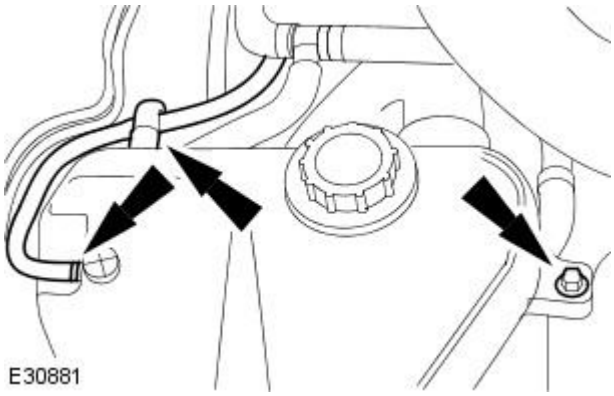


**2.** NOTE: Cap the vent hoses to minimize coolant loss.

Detach the coolant expansion tank.

- Detach the vent hoses.
- Remove the coolant expansion tank retaining bolt.

All vehicles

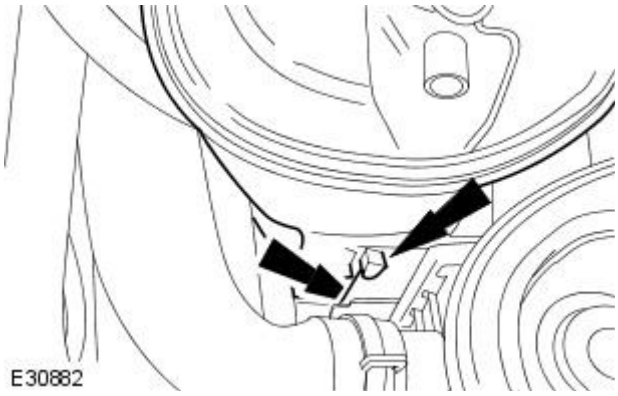


**3.** Detach the coolant expansion tank.

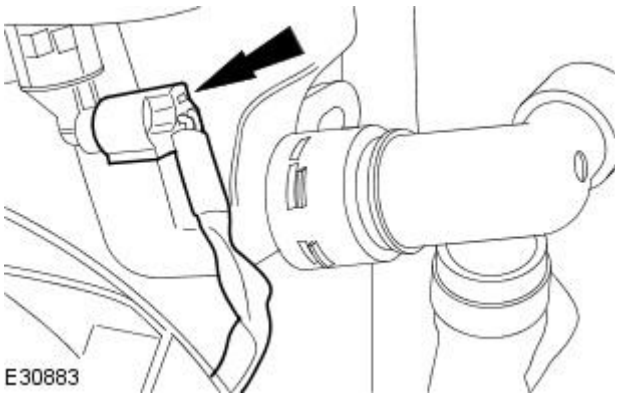


**4.** Disconnect the coolant expansion tank low level sensor.

GETtheMANUALS.org

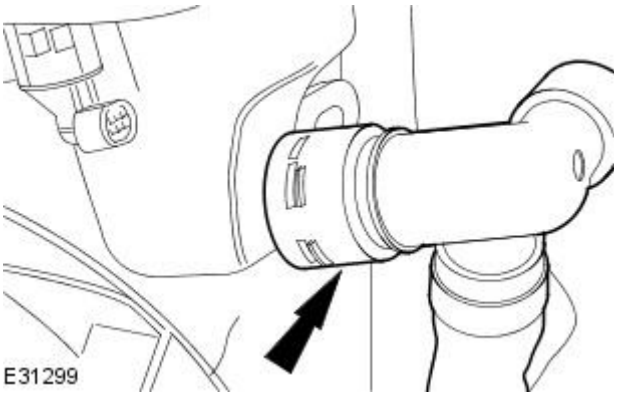


**5.** NOTE: Make sure the retaining clip is not removed.

• NOTE: Cap the coolant expansion tank lower hose to minimize coolant loss.

Detach the coolant expansion tank lower hose.

- Remove the coolant expansion tank.

## Installation

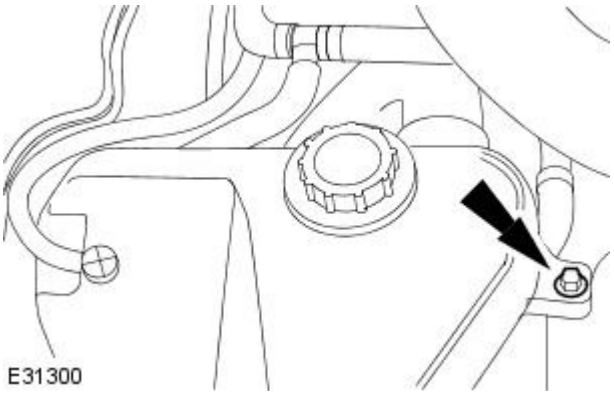


**1.** To install, reverse the removal procedure.

- Tighten to 3 Nm.

**2.** Check and top up the cooling system as required.

GETtheMANUALS.org

# Engine Cooling - V8 4.2L Petrol / V8 S/C 4.2L Petrol / 2.5L NA V6 - AJV6 / 3.0L NA V6 - AJ27 - Cooling Fan Motor and Shroud

Removal and Installation

## Removal

All Vehicles

1. Remove fuse 38 from the engine compartment fuse box prior to performing any under hood service in the area of the cooling fan.
2. Drain the cooling system.
   For additional information, refer to Cooling System Draining, Filling and Bleeding in this section.
3. Lower the vehicle.
4. Remove the coolant expansion tank.
   For additional information, refer to Coolant Expansion Tank in this section.

Vehicles with 2.5L or 3.0L engine

5. Remove the air cleaner. For additional information, refer to Section 303-12A Intake Air Distribution and Filtering / 303-12B Intake Air Distribution and Filtering / 303-12C Intake Air Distribution and Filtering.

Vehicles with 4.2L engine

6. Remove the air cleaner. For additional information, refer to Section 303-12A Intake Air Distribution and Filtering / 303-12B Intake Air Distribution and Filtering / 303-12C Intake Air Distribution and Filtering.

All Vehicles

7. Remove the radiator mounting brackets.

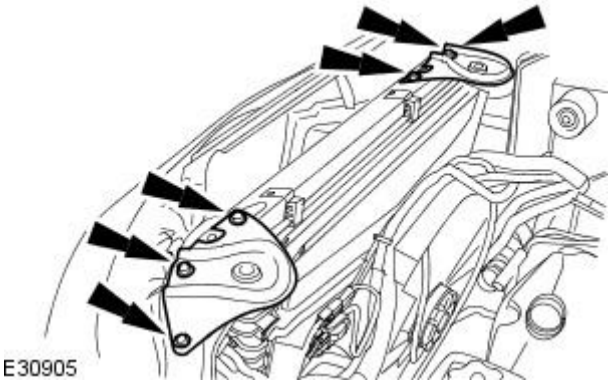


8. Detach the upper coolant hose.

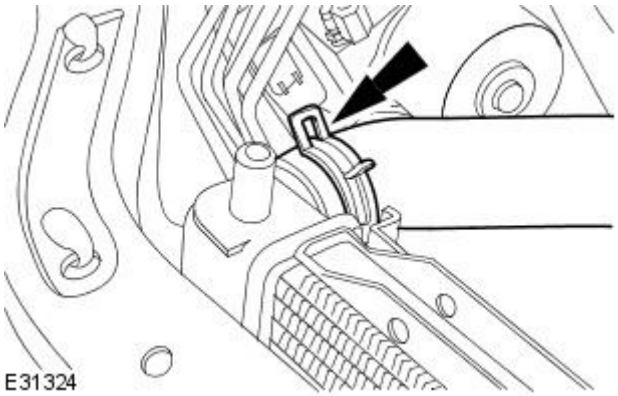


9. Disconnect the cooling module electrical connectors.

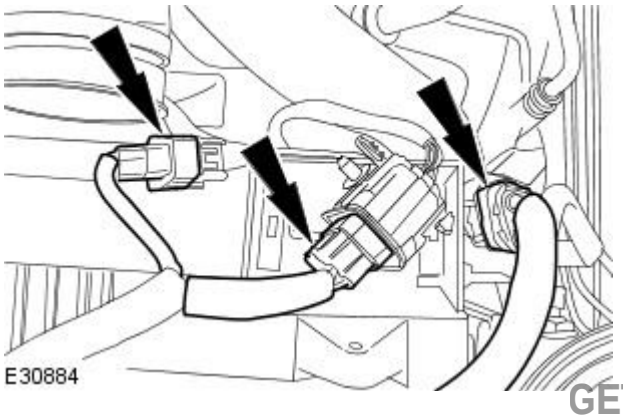


GETtheMANUALS.org

Vehicles with 4.2L engine

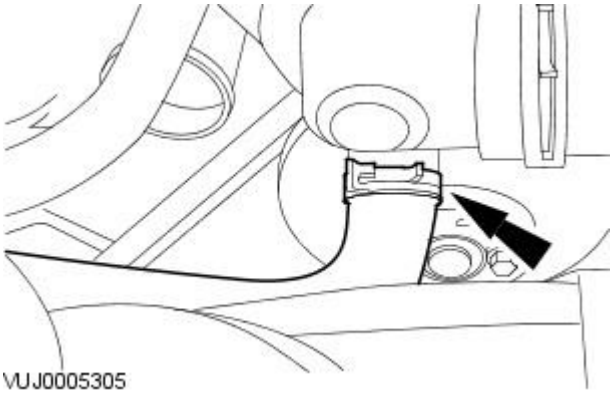


**10.** Detach the thermostat housing hose.

**11.** Disconnect the auxiliary water pump electrical connector.

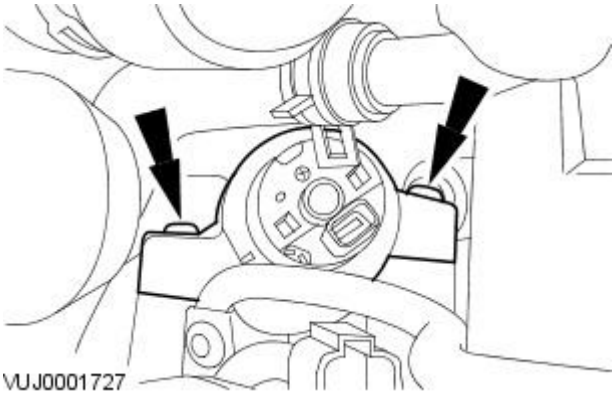


**12.** Detach the auxiliary water pump.

All Vehicles

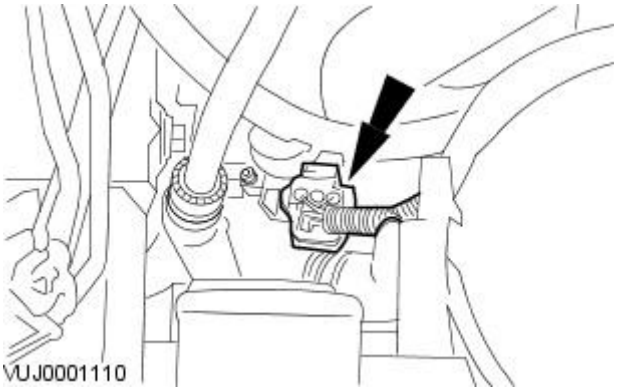


**13.** Disconnect the dual coolant flow valve electrical connector.

GETtheMANUALS.org

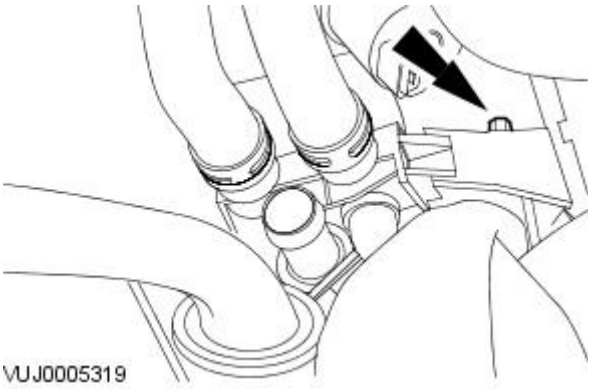


**14.** Detach the dual coolant flow valve.

Vehicles with supercharger

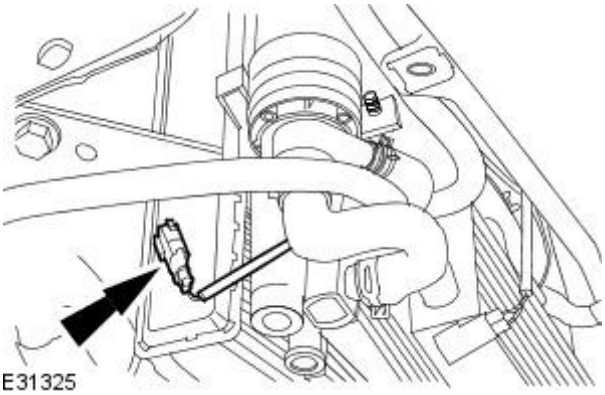


**15.** Disconnect the water pump electrical connector.

All vehicles

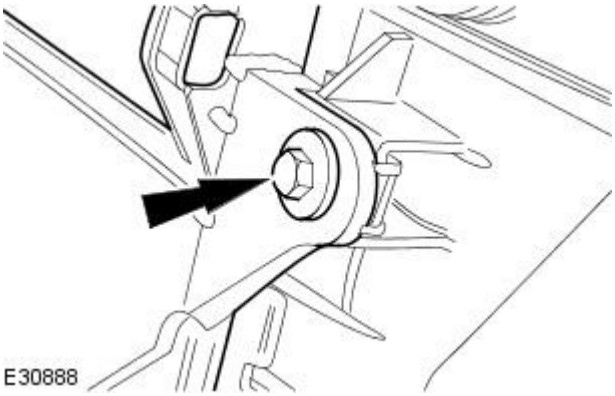


**16.** NOTE: Right-hand shown left-hand similar.

Remove the cooling fan motor and shroud retaining bolt.

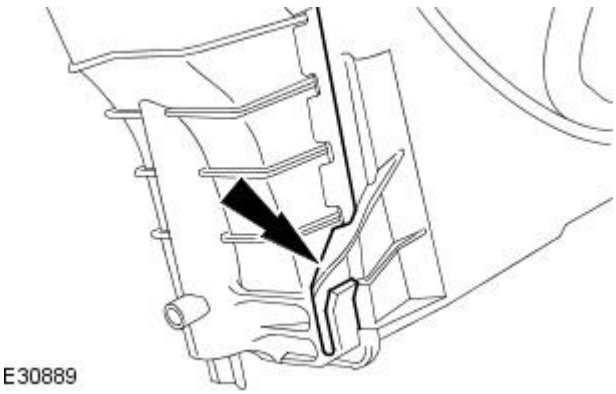


**17.** CAUTION: Make sure that the retaining lugs of the radiator are not damaged when detaching the cooling fan motor and shroud.

- NOTE: Left-hand shown right-hand similar.

Detach the cooling fan motor and shroud from the retaining lugs of the radiator.

GETtheMANUALS.org

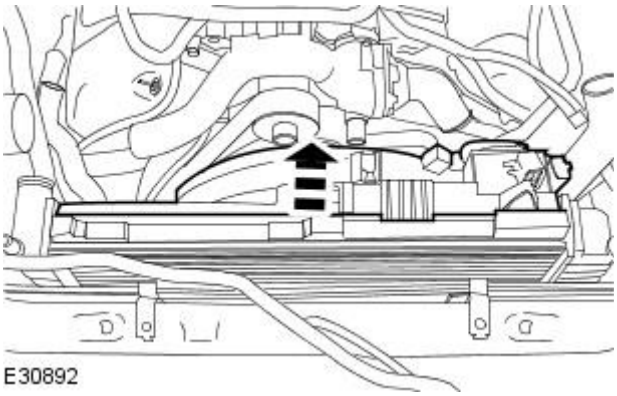


**18.** CAUTION: Make sure that the radiator is not damaged when removing the cooling fan motor and shroud.

Remove the cooling fan motor and shroud.

## Installation

**1.** CAUTIONS:

Make sure that the radiator is not damaged when installing the cooling fan motor and shroud.

Make sure that the retaining lugs of the radiator are not damaged when installing the cooling fan motor and shroud.

To install, reverse the removal procedure.

**2.** Tighten to 10 Nm.

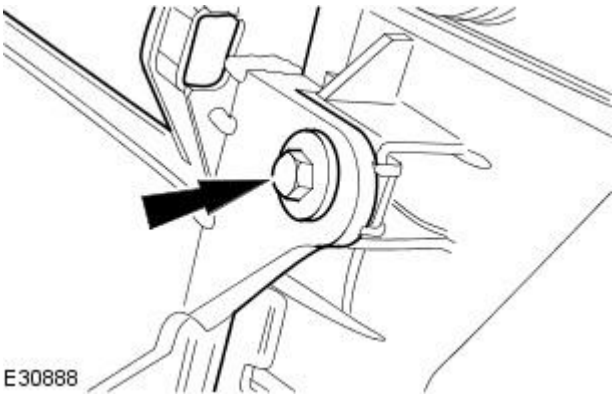


**3.** Tighten to 10 Nm.

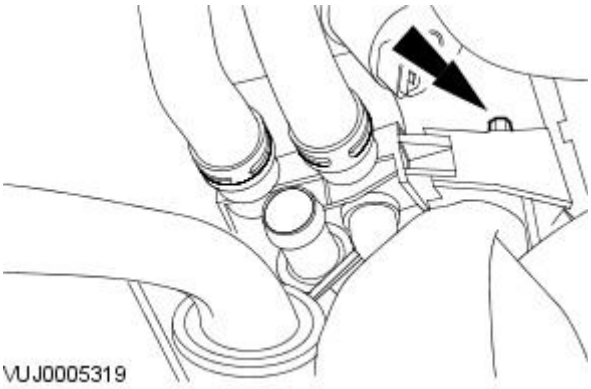


**4.** Tighten to 10 Nm.

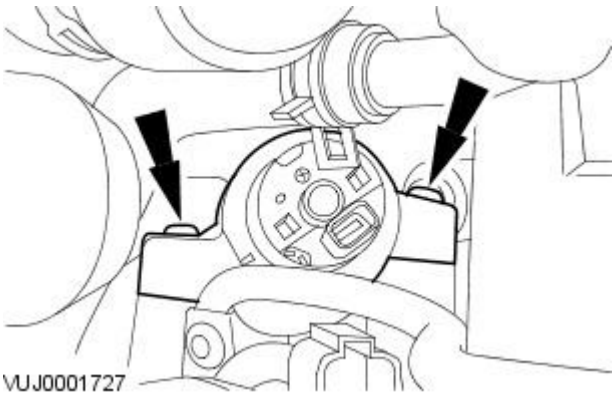


GETtheMANUALS.org

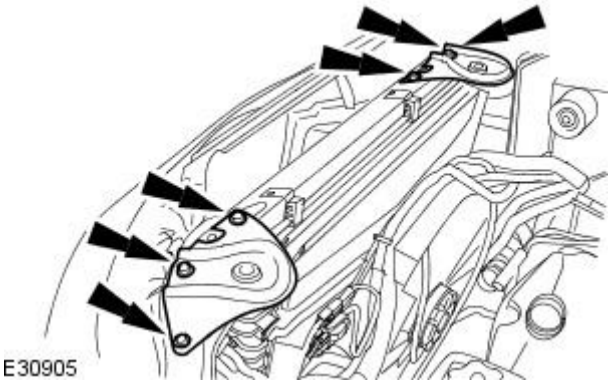


**5.** Tighten to 6 Nm.

**6.** Fill the cooling system.
For additional information, refer to Cooling System Draining, Filling and Bleeding in this section.

GETtheMANUALS.org

# Engine Cooling - V8 4.2L Petrol / V8 S/C 4.2L Petrol / 2.5L NA V6 - AJV6 / 3.0L NA V6 - AJ27 - Cooling ModuleVehicles Without: Supercharger

Removal and Installation

## Removal

All Vehicles

1. Remove fuse 38 from the engine compartment fuse box prior to performing any under hood service in the area of the cooling fan.
2. Drain the cooling system.
   For additional information, refer to Cooling System Draining, Filling and Bleeding in this section.
3. Reclaim the air conditioning refrigerant.
   For additional information, refer to Section 412-00 Climate Control System - General Information.

Vehicles with 2.5L or 3.0L engine

4. Remove the air cleaner. For additional information, refer to Section 303-12A Intake Air Distribution and Filtering / 303-12B Intake Air Distribution and Filtering / 303-12C Intake Air Distribution and Filtering.

Vehicles with 4.2L engine

5. Remove the air cleaner. For additional information, refer to Section 303-12A Intake Air Distribution and Filtering / 303-12B Intake Air Distribution and Filtering / 303-12C Intake Air Distribution and Filtering.

All Vehicles

6. Remove the radiator mounting brackets.

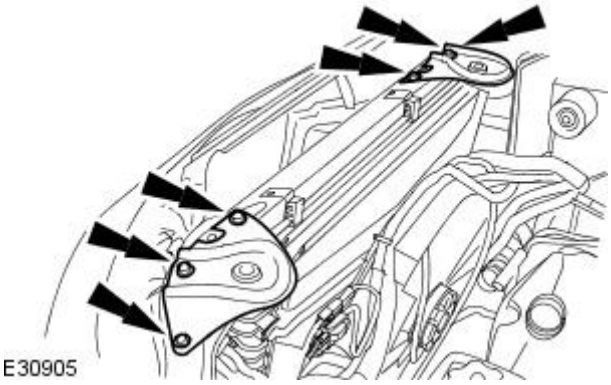


7. Detach the upper coolant hose.

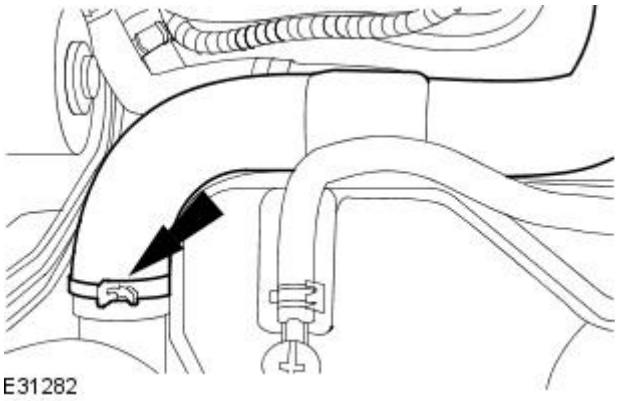


8. Detach the expansion tank vent hose.

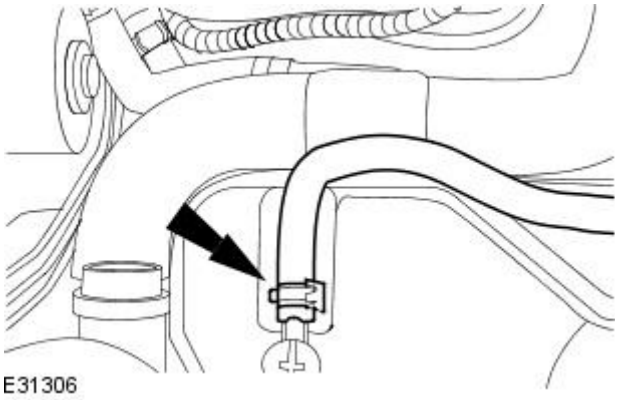


GETtheMANUALS.org

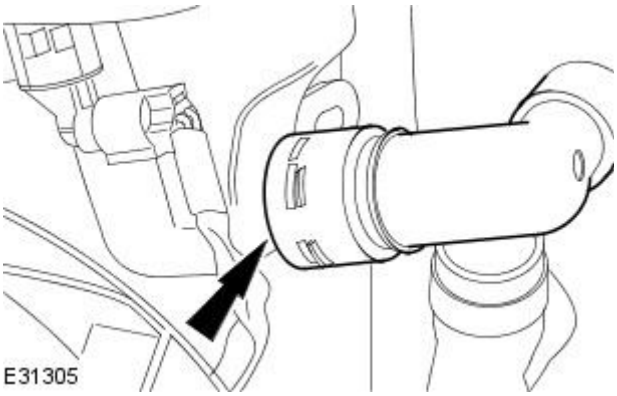


**9.** NOTE: Make sure the retaining clip is not removed.

Detach the coolant expansion tank lower hose.

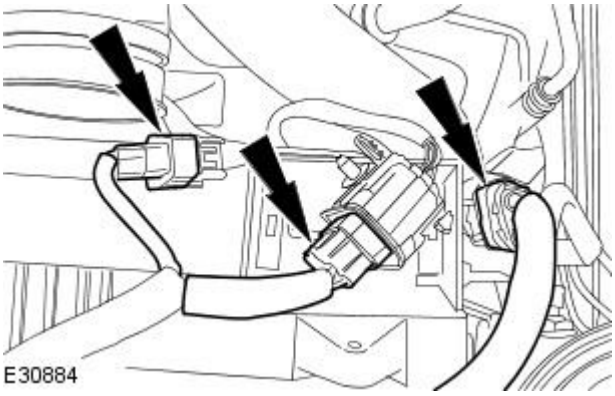


**10.** Disconnect the cooling module electrical connectors.

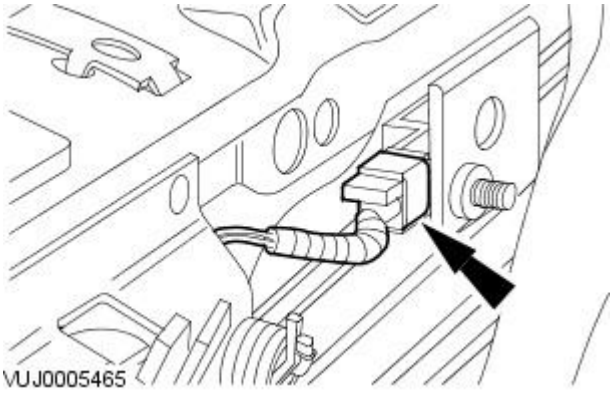


**11.** Disconnect the front crash sensor.

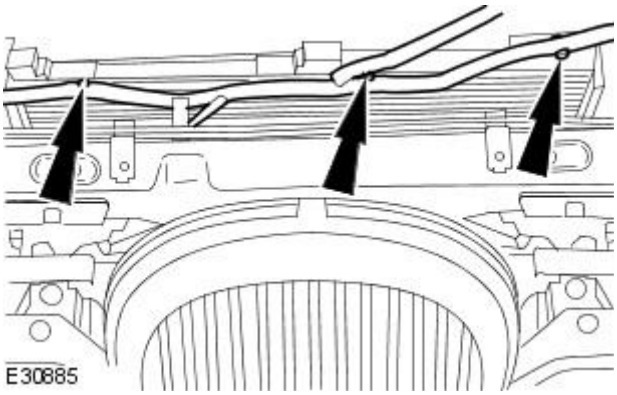


**12.** Detach the wiring harness.

Vehicles with 4.2L engine

GETtheMANUALS.org

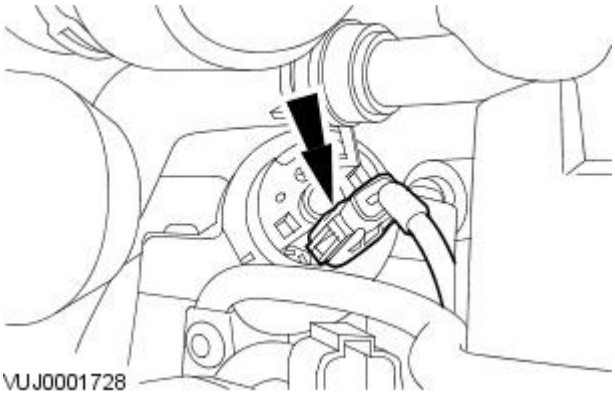


**13.** Disconnect the auxiliary water pump electrical connector.

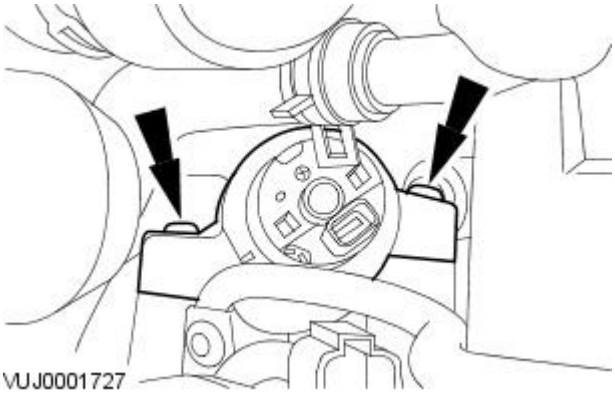


**14.** Detach the auxiliary water pump.

All vehicles

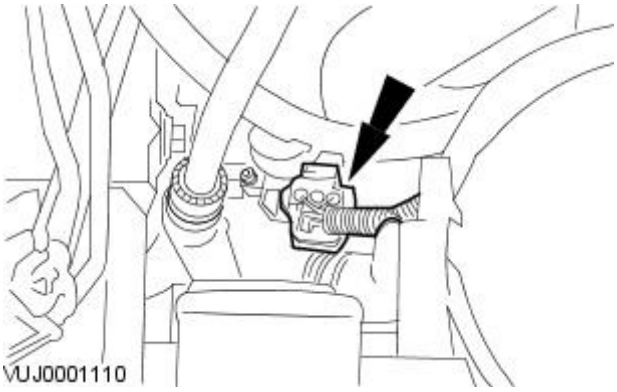


**15.** Disconnect the dual coolant flow valve electrical connector.

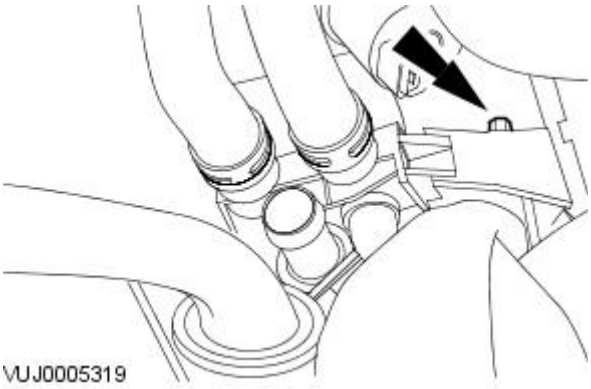


**16.** Detach the dual coolant flow valve.

Vehicles with 2.5L or 3.0L engine

GETtheMANUALS.org

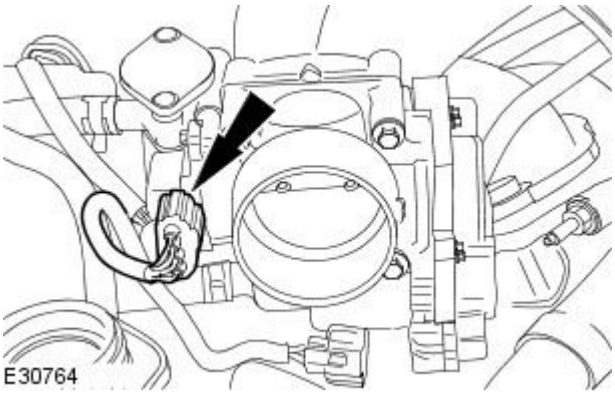


**17.** Disconnect the throttle potentiometer (TP) electrical connector.

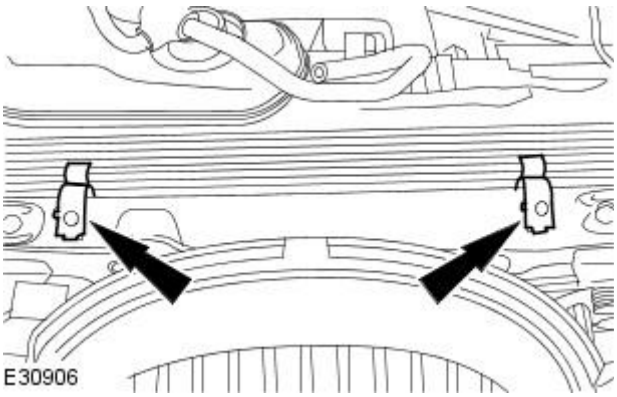


**18.** Detach the brake tube securing brackets.

Vehicles with automatic transmission

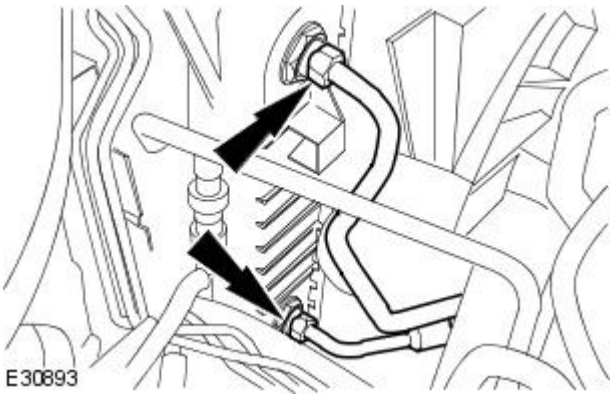


**19.** Detach the transmission oil cooler inlet and return pipes.

- Remove and discard the O-ring seals.
- Cap the oil cooler inlet and return pipes and the oil cooler.

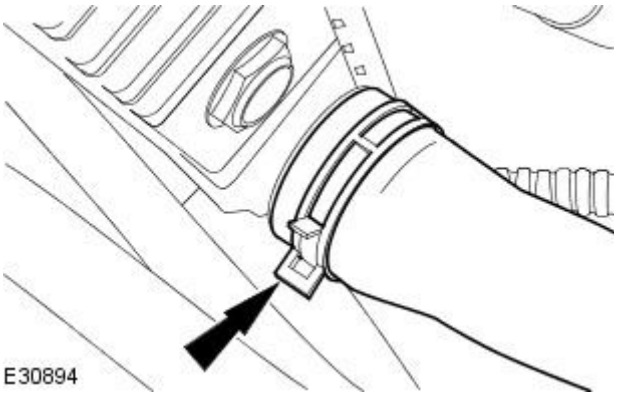


**20.** Detach the lower coolant hose.

Vehicles with manual transmission

GETtheMANUALS.org

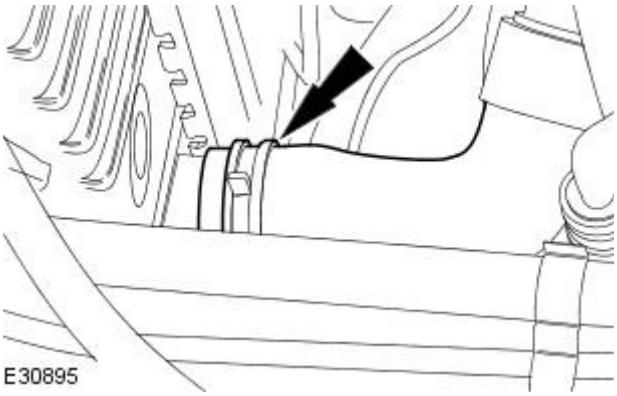


**21.** Detach the lower coolant hose.

All Vehicles

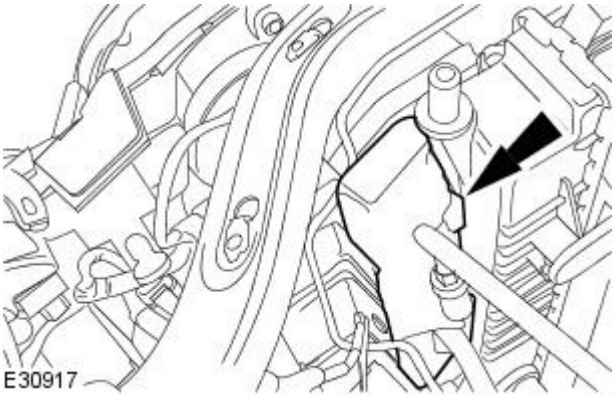


**22.** Detach the radiator seal.

- Left-hand shown, right-hand similar.
- Remove the double-sided adhesive tape.

**23.** Raise the vehicle.

**24.** Remove the radiator lower cowl.

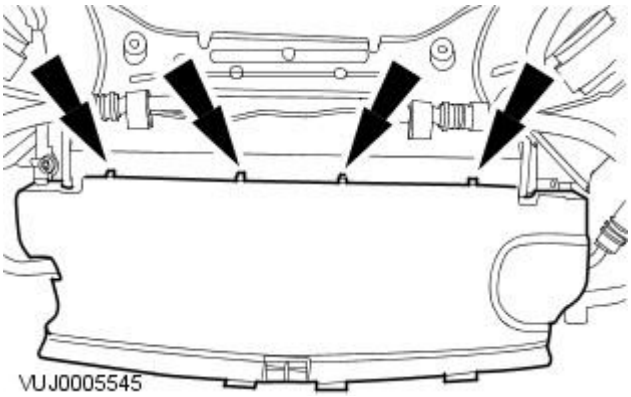


**25.** NOTE: Left-hand shown, right-hand similar.

Detach the power steering oil cooler.

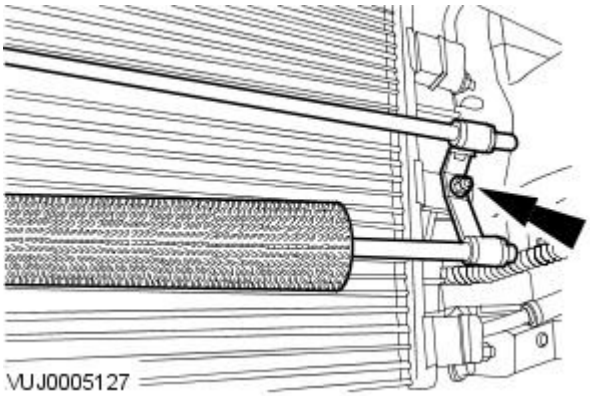


GETtheMANUALS.org

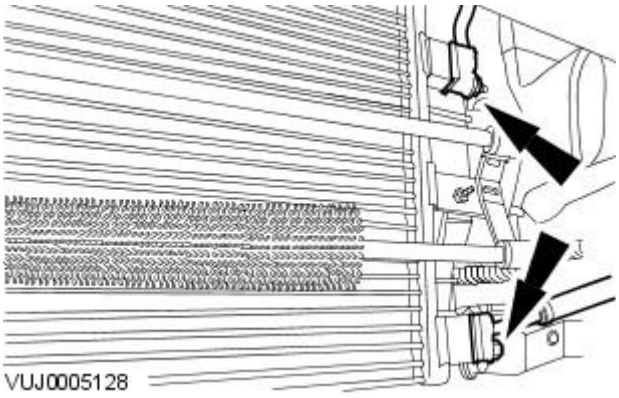


**26.** Disconnect the condenser core supply and return lines.

- Remove and discard the O-ring seals.
- Cap the exposed ports.

**27.** Lower the vehicle.

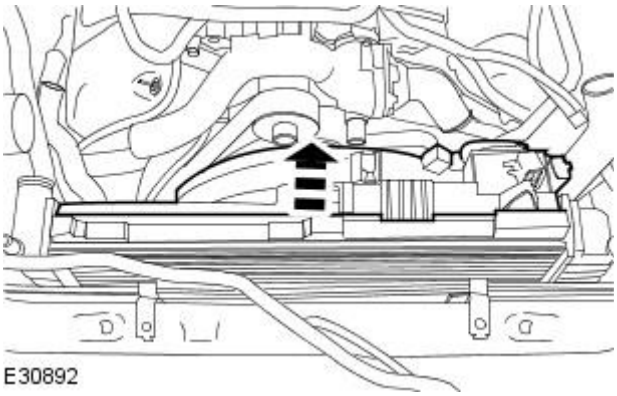


**28.** CAUTION: Make sure that the radiator and the air conditioning condenser are not damaged during the removal of the cooling module.

Remove the cooling module.

## Installation

All vehicles

**1.** CAUTION: Make sure that the radiator and the air conditioning condenser are not damaged during the installation of the cooling module.

• NOTE: Install new O-ring seals to the condenser core supply and return lines and lubricate them with A/C refrigerant oil.

To install, reverse the removal procedure.

**2.** Tighten to 8 Nm.

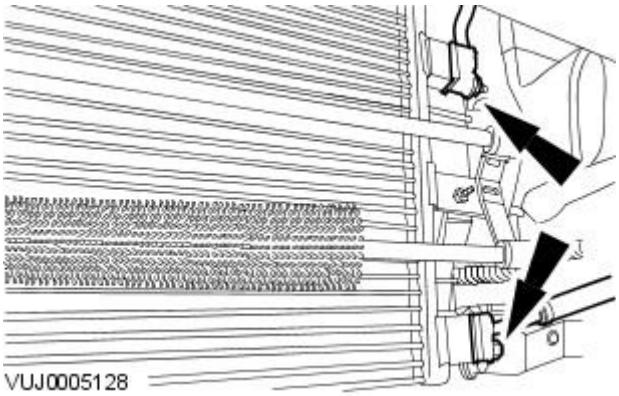


**3.** Tighten to 7 Nm.

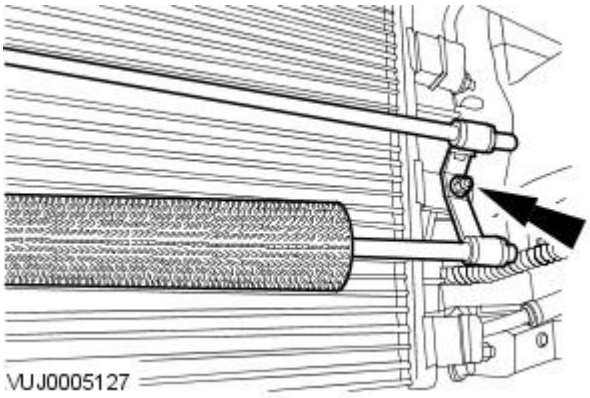


Vehicles with automatic transmission

GETtheMANUALS.org

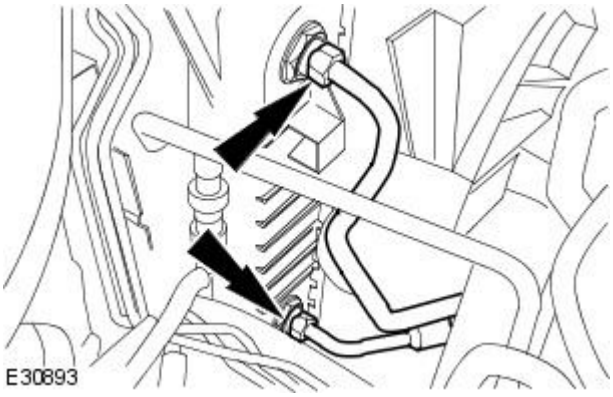


4. NOTE: Install new O-ring seals.

   Tighten to 20 Nm.

All vehicles

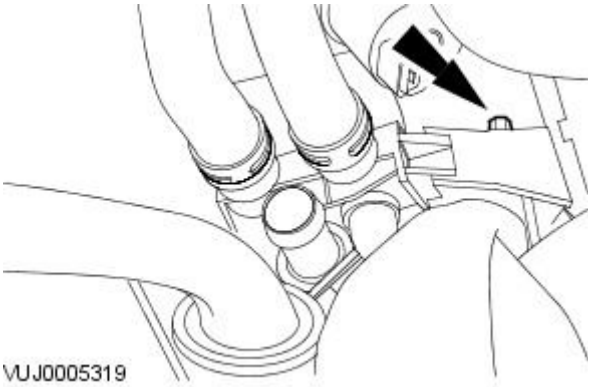


5. Tighten to 10 Nm.

Vehicles with 4.2L engine

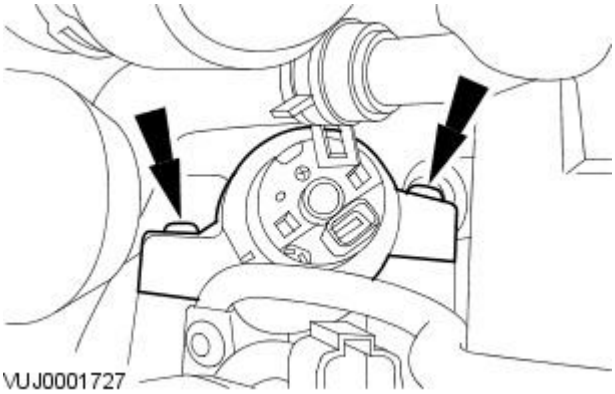


6. Tighten to 10 Nm.

All vehicles

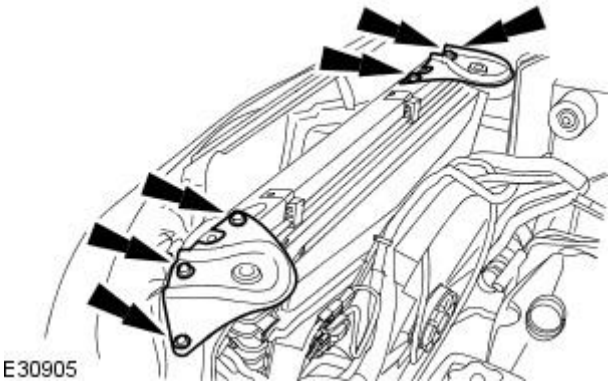


7. Tighten to 7 Nm.

8. Carry out the air conditioning (A/C) system evacuation and charging procedure.
   For additional information, refer to Section 412-00 Climate Control System - General Information.

9. Fill the cooling system.
   For additional information, refer to Cooling System Draining, Filling and Bleeding in this section.

Vehicles with automatic transaxle

10. Carry out transmission fluid level check.

    For additional information, refer to Section 307-01 Automatic Transmission/Transaxle.

GETtheMANUALS.org

# Engine Cooling - V8 4.2L Petrol / V8 S/C 4.2L Petrol / 2.5L NA V6 - AJV6 / 3.0L NA V6 - AJ27 - Radiator

Removal and Installation

## Removal

All vehicles

1. Remove the cooling fan motor and shroud.
   For additional information, refer to Cooling Fan Motor and Shroud in this section.

Vehicles with automatic transmission

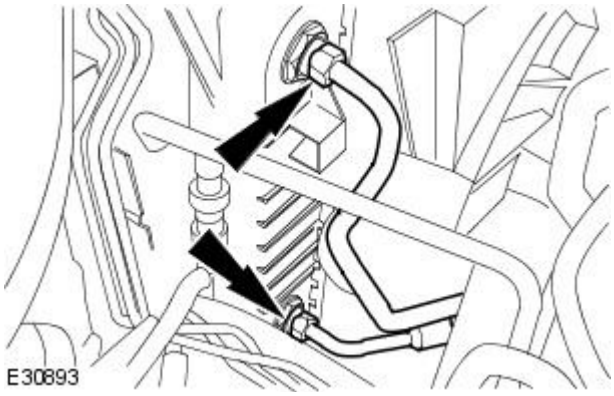


2. Detach the transmission oil cooler inlet and return pipes.
   - Remove and discard the O-ring seals.
   - Cap the oil cooler inlet and return pipes and the oil cooler.

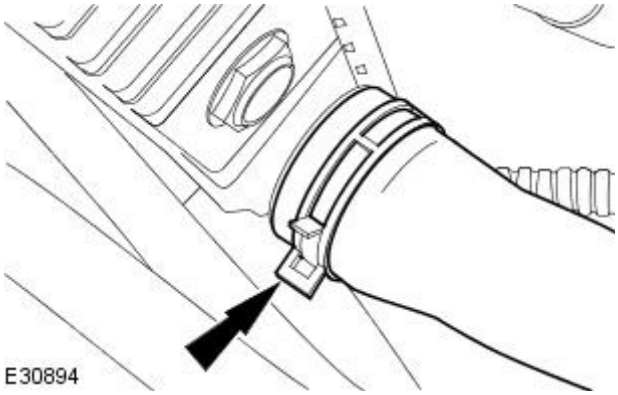


3. Detach the lower coolant hose.

Vehicles with manual transmission

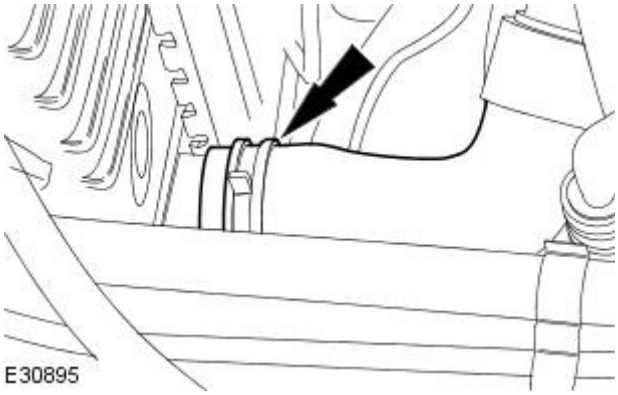


4. Detach the lower coolant hose.

All Vehicles

GETtheMANUALS.org

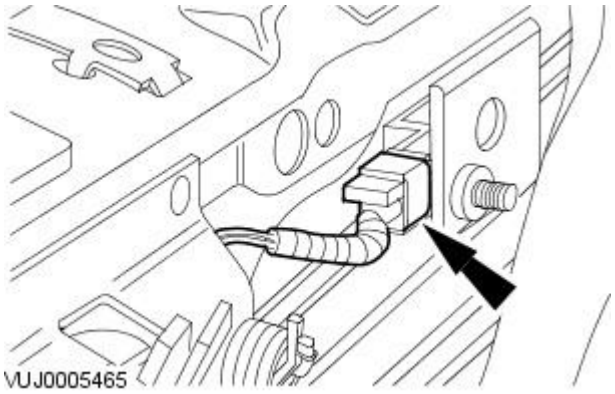


**5.** Disconnect the front crash sensor.

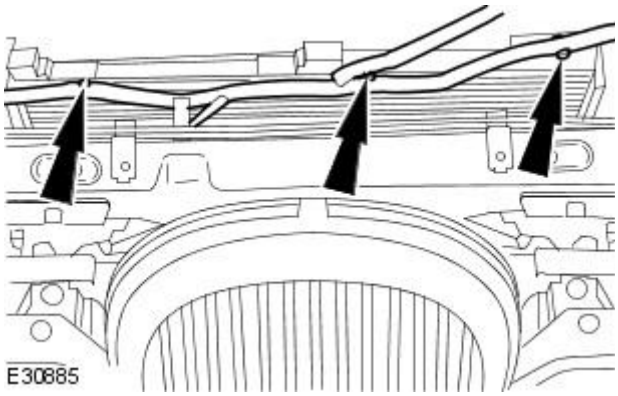


**6.** Detach the wiring harness.

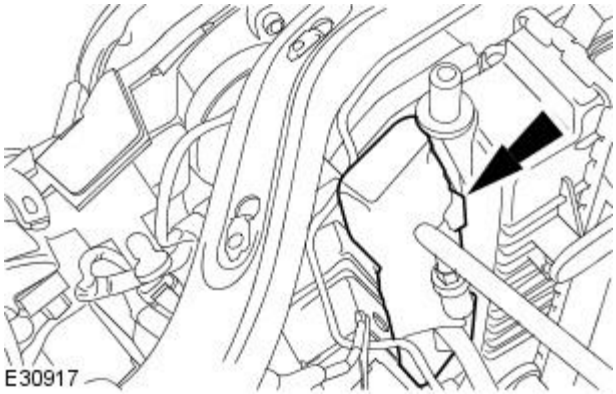


**7.** Detach the radiator seal.

- Left-hand shown, right-hand similar.
- Remove the double-sided adhesive tape.

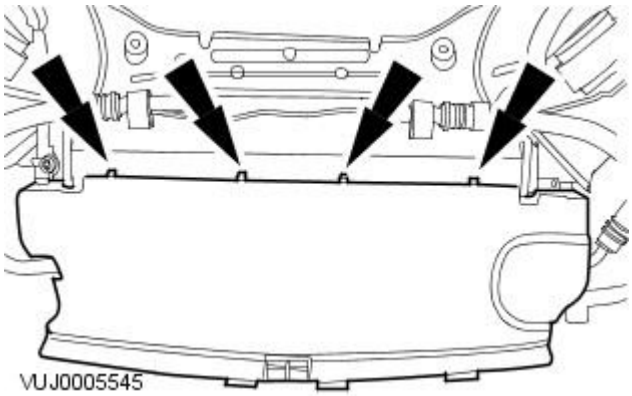


**8.** Raise the vehicle.

**9.** Remove the radiator lower cowl.

Vehicles with supercharger

**10.** Remove the water pump. For additional information, refer to Section 303-03A Engine Cooling / 303-03B Supercharger Cooling / 303-03C Engine Cooling.

GETtheMANUALS.org

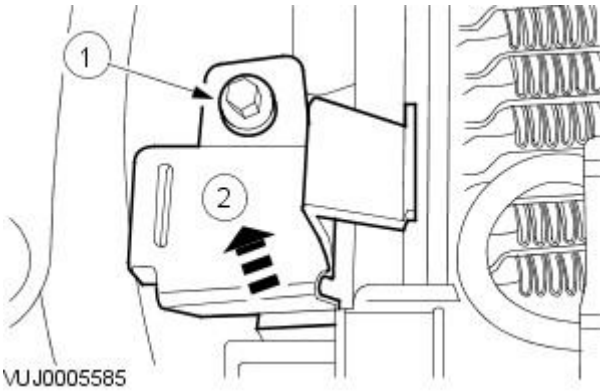


**11.** Remove the water pump retaining bracket.

1. Remove the retaining bolt.
2. Remove the water pump retaining bracket.

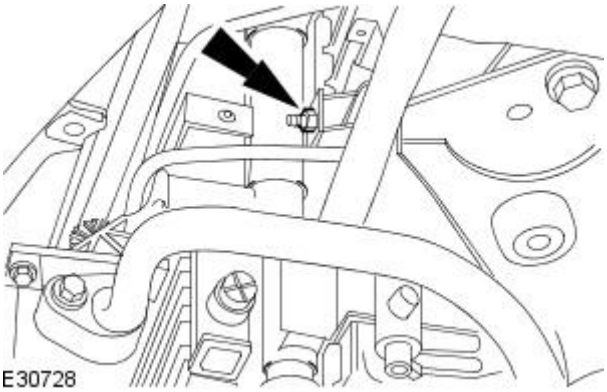


**12.** Remove the cooling module retaining bolt.

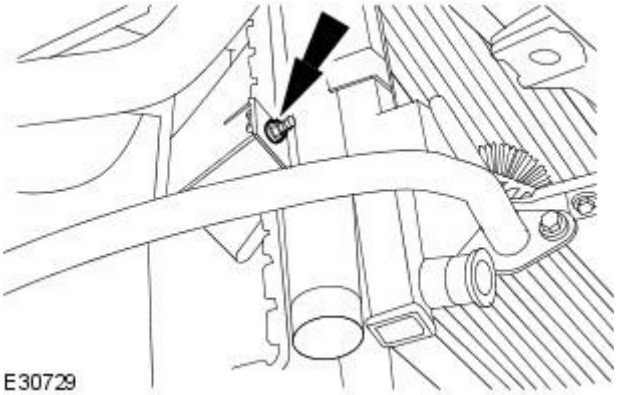


**13.** Remove the cooling module retaining bolt.

- Secure the supercharger cooling radiator, condenser core and engine oil cooler using suitable retaining straps.

Vehicles without supercharger

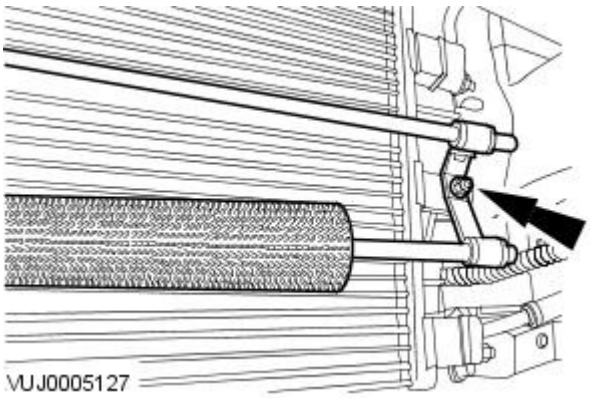


**14.** NOTE: Left-hand shown, right-hand similar.

Detach the power steering oil cooler.

GETtheMANUALS.org

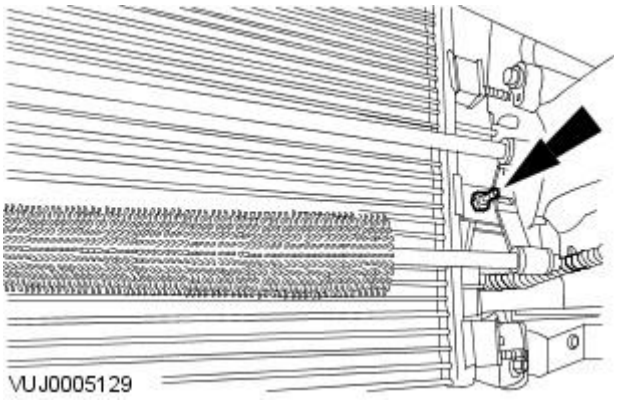


**15.** NOTE: Left-hand shown, right-hand similar.

Remove the condenser core retaining stud.

- Secure the condenser core and PAS cooler using suitable retaining straps.

All vehicles

**16.** Lower the vehicle.

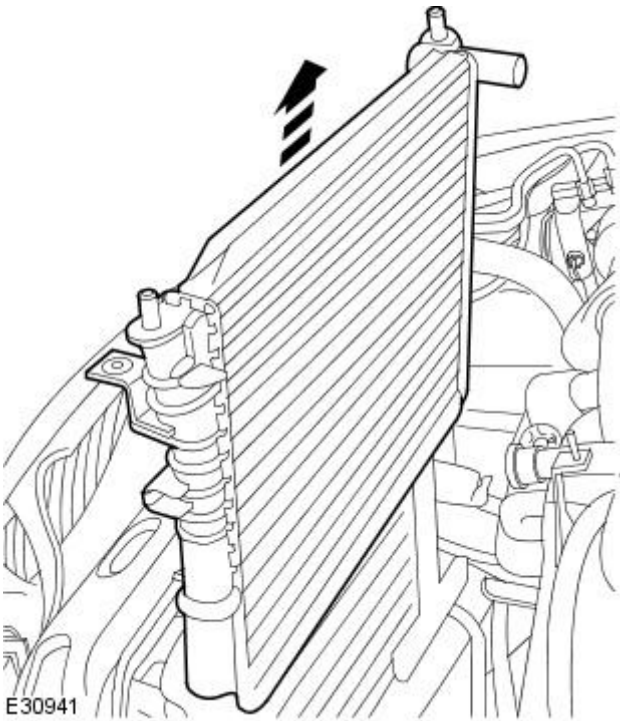


**17.** CAUTION: Make sure that the radiator is not damaged when removed.

Remove the radiator.

## Installation

All vehicles

**1.** CAUTION: Make sure that the radiator is not damaged when installed.

To install, reverse the removal procedure.

Vehicles without supercharger

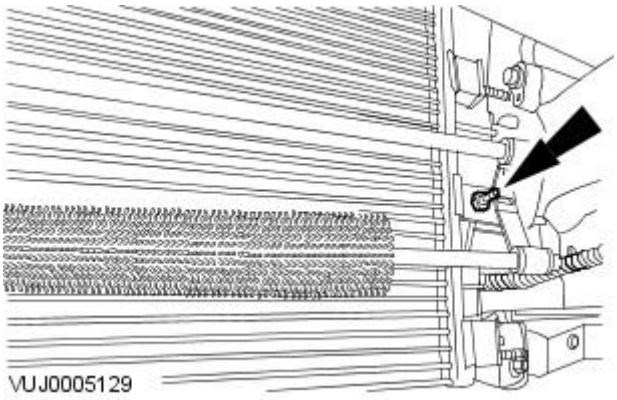


**2.** NOTE: Left-hand shown, right-hand similar.

Tighten to 7 Nm.

GETtheMANUALS.org

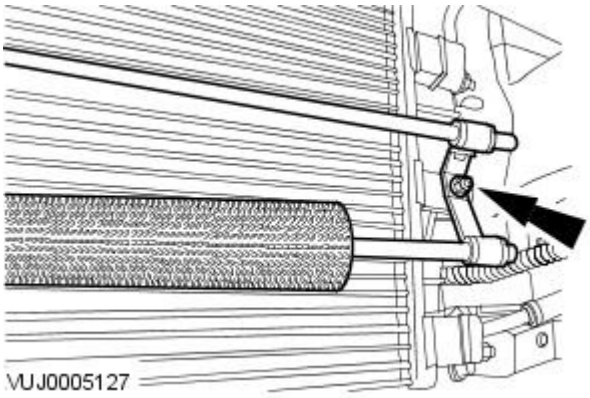


**3.** NOTE: Left-hand shown, right-hand similar.

Tighten to 7 Nm.

Vehicles with supercharger

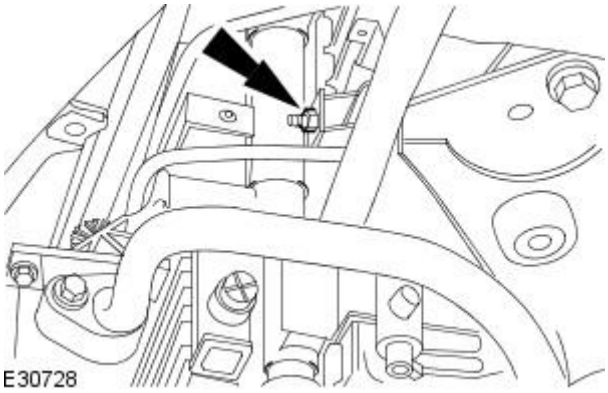


**4.** Tighten to 7 Nm.

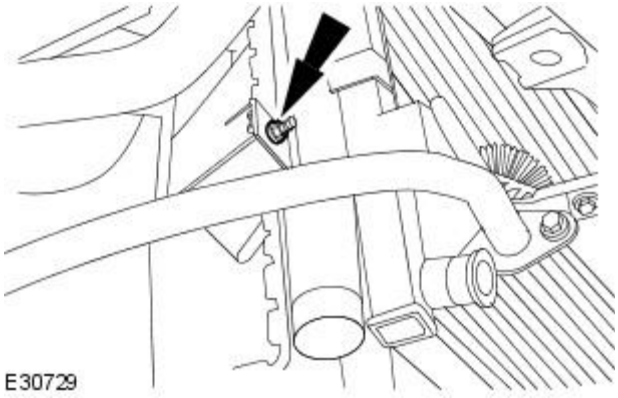


**5.** Tighten to 7 Nm.

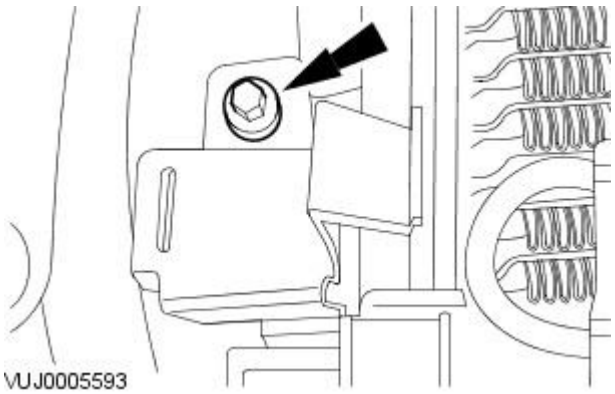


**6.** Tighten to 7 Nm.

Vehicles with automatic transmission

GETtheMANUALS.org

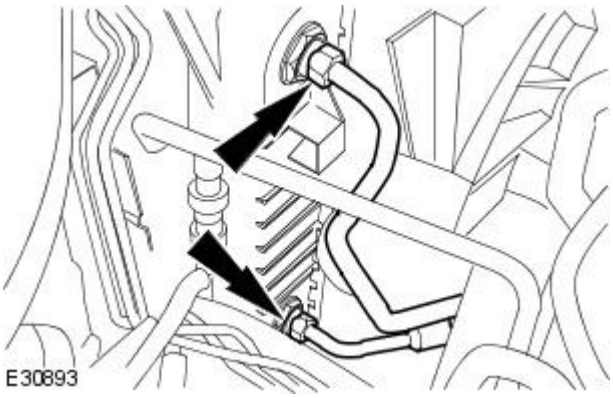


**7.** NOTE: Install new O-ring seals.

Tighten to 20 Nm.

**8.** Carry out transmission fluid level check.
For additional information, refer to Section 307-01 Automatic Transmission/Transaxle.

GETtheMANUALS.org

# Engine Cooling - V8 4.2L Petrol/V8 S/C 4.2L Petrol/2.5L NA V6 - AJV6/3.0L NA V6 - AJ27 - Thermostat2.5L/3.0L

Removal and Installation

## Removal

1. Remove fuse 38 from the engine compartment fuse box prior to performing any under hood service in the area of the cooling fan.
2. Drain the cooling system.
   For additional information, refer to: Cooling System Draining, Filling and Bleeding (303-03A Engine Cooling - V8 4.2L Petrol/V8 S/C 4.2L Petrol/2.5L NA V6 - AJV6/3.0L NA V6 - AJ27, General Procedures).
3. Lower the vehicle.
4. Remove the air cleaner outlet pipe.
   For additional information, refer to: Air Cleaner Outlet Pipe - VIN Range: N52048->N99999 (303-12A Intake Air Distribution and Filtering - 2.5L NA V6 - AJV6/3.0L NA V6 - AJ27, Removal and Installation).
5. Remove the thermostat housing.

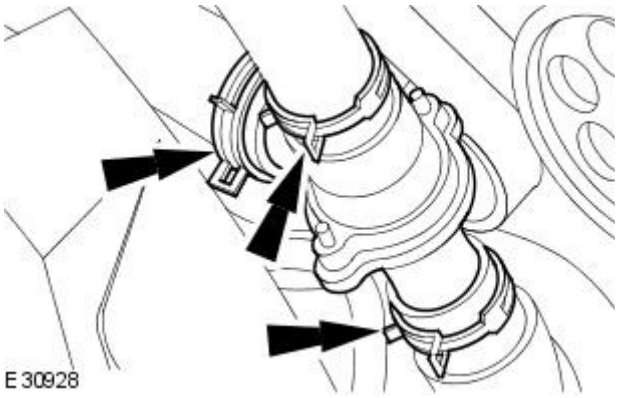


6. Remove the thermostat.

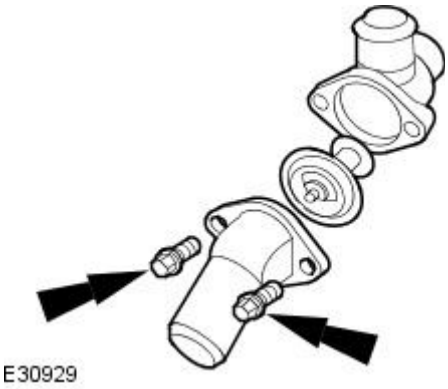


## Installation

1. To install, reverse the removal procedure.
   - Install a new O-ring seal.
2. Tighten to 18 Nm.

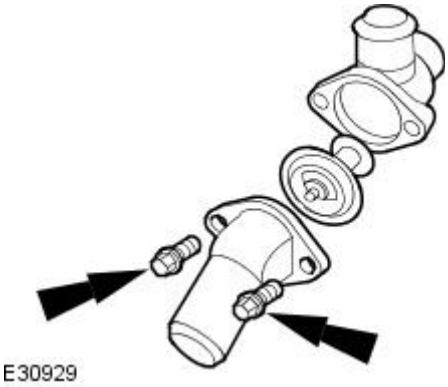


3. Fill the cooling system.
   For additional information, refer to: Cooling System Draining, Filling and Bleeding (303-03A Engine Cooling - V8 4.2L Petrol/V8 S/C 4.2L Petrol/2.5L NA V6 - AJV6/3.0L NA V6 - AJ27, General Procedures).
4. NOTE: For NAS vehicles only.

   If required, carry out a long drive cycle.
   For additional information, refer to: Powertrain Control Module (PCM)

   Long Drive Cycle Self-Test (303-14A Electronic Engine Controls - 2.5L NA V6 - AJV6/3.0L NA V6 - AJ27, General Procedures).

GETtheMANUALS.org

# Engine Cooling - V8 4.2L Petrol / V8 S/C 4.2L Petrol / 2.5L NA V6 - AJV6 / 3.0L NA V6 - AJ27 - Thermostat4.2L, Vehicles With: Supercharger

Removal and Installation

## Removal

• WARNINGS:

Never remove the coolant pressure cap under any circumstances while the engine is operating. Failure to follow this instruction may result in personal injury.

To avoid having scalding hot coolant or steam blow out of the cooling system, use extreme care when removing the coolant pressure cap from a hot cooling system. Wait until the engine has cooled, then wrap a thick cloth around the coolant pressure cap and turn it slowly until the pressure begins to release. Step back while the pressure is released from the system. When certain all the pressure has been released (still with a cloth) turn and remove the coolant pressure cap from the coolant expansion tank. Failure to follow these instructions may result in personal injury.

Remove fuse 38 from the engine compartment fuse box prior to performing any under hood service in the area of the cooling fan when the engine is hot, since the cooling fan motor could operate if the engine has been switched OFF. Failure to follow this instruction may result in personal injury.

• CAUTIONS:

The engine cooling system must be maintained with the correct concentration and type of anti-freeze solution to prevent corrosion and frost damage.

Never remove the coolant pressure cap under any circumstances while the engine is operating. Failure to follow this instruction may result in damage to the engine.

1. Remove the air cleaner outlet pipe.
   For additional information, refer to: Air Cleaner Outlet Pipe (303-12B Intake Air Distribution and Filtering - V8 4.2L Petrol/V8 S/C 4.2L Petrol, Removal and Installation).
2. Detach the thermostat housing hose.
   - Clamp the bottom hose, to minimise coolant loss.
   - Position an absorbant cloth to collect fluid spillage.

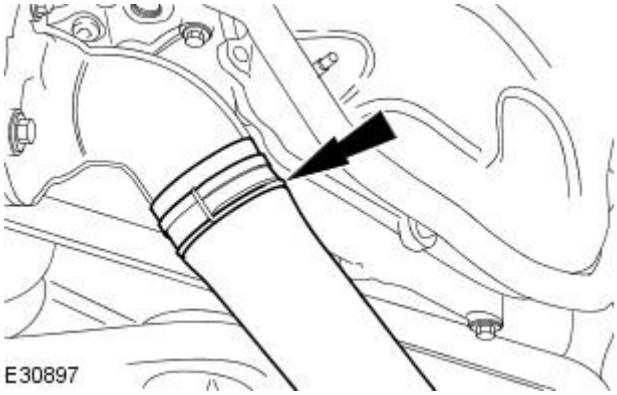


3. Remove the thermostat.
   - Position an absorbant cloth to collect fluid spillage.

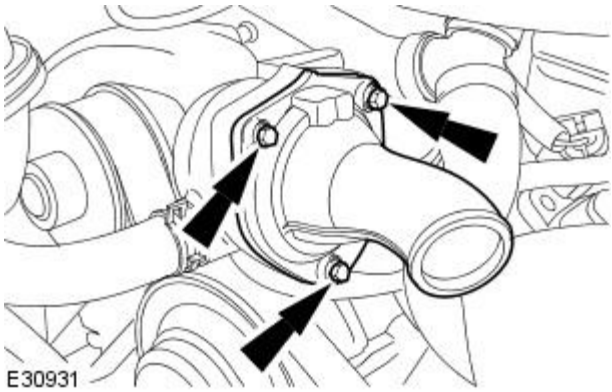


## Installation

GETtheMANUALS.org

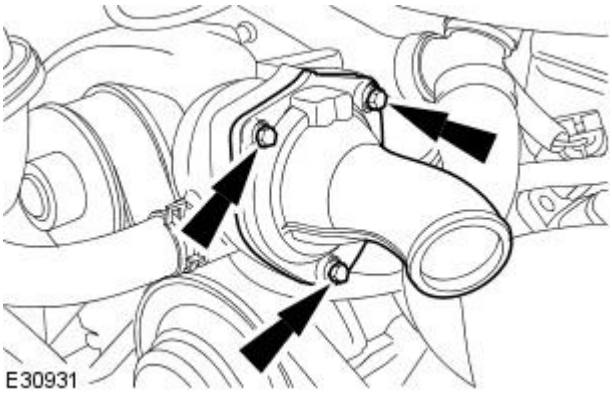


**1.** To install, reverse the removal procedure.

- Tighten to 9 Nm.

**2.** Install the air cleaner outlet pipe.
For additional information, refer to: Air Cleaner Outlet Pipe (303-12B Intake Air Distribution and Filtering - V8 4.2L Petrol/V8 S/C 4.2L Petrol, Removal and Installation).

**3.** Remove the coolant expansion tank bleed screw.

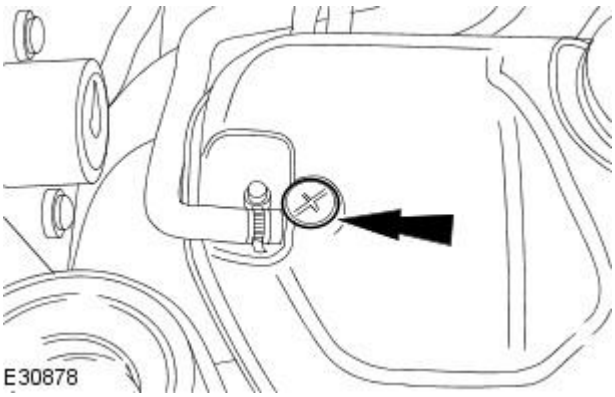


**4.** Fill the cooling system up to the MAX mark on the coolant expansion tank using a fifty percent mixture of Jaguar Premium Cooling System Fluid or equivalent, meeting Jaguar specification WSS M97B44-D and fifty percent water.

**5.** CAUTION: Do not over tighten the coolant expansion tank bleed screw. Failure to follow this instruction may cause damage to the vehicle

Install the coolant expansion tank bleed screw.

- Tighten to 1 Nm.

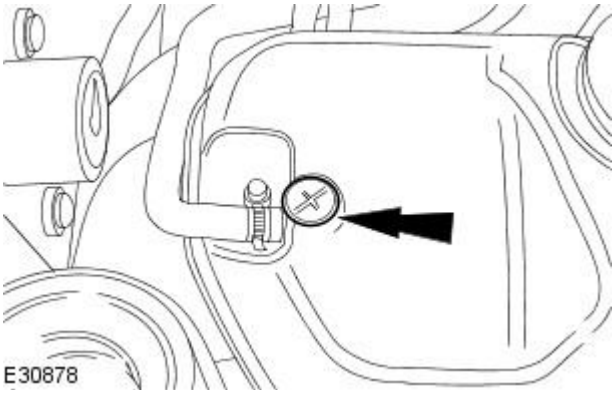


**6.** Install the coolant expansion tank pressure cap.

**7.** CAUTION: Do not RUN the engine with the coolant expansion tank pressure cap removed. Failure to follow this instruction may cause damage to the vehicle

START and RUN the engine.

**8.** SET the heating system to MAX heat, the blower motor to MAX speed and the air distribution to instrument panel registers.

**9.** CAUTION: Observe the engine temperature gauge. If the engine starts to over-heat switch off immediately and allow to cool. Failure to follow this instruction may cause damage to the vehicle.

Allow the engine to RUN until hot air is emitted from the instrument panel registers, while observing the engine temperature gauge.

**10.** Switch off the engine.

**11.** Allow the engine to cool.

**12.** Release the cooling system pressure.

- Remove the coolant expansion tank pressure cap.

**13.** Top up the cooling system.

- Fill the cooling system up to the MAX mark on the coolant

GETtheMANUALS.org

expansion tank using a fifty percent mixture of Jaguar Premium Cooling System Fluid or equivalent, meeting Jaguar specification WSS M97B44-D and fifty percent water.

**14.** Install the coolant expansion tank pressure cap.

GETtheMANUALS.org

# Engine Cooling - V8 4.2L Petrol / V8 S/C 4.2L Petrol / 2.5L NA V6 - AJV6 / 3.0L NA V6 - AJ27 - Thermostat4.2L, Vehicles Without: Supercharger

Removal and Installation

## Removal

• WARNINGS:

Never remove the coolant pressure cap under any circumstances while the engine is operating. Failure to follow this instruction may result in personal injury.

To avoid having scalding hot coolant or steam blow out of the cooling system, use extreme care when removing the coolant pressure cap from a hot cooling system. Wait until the engine has cooled, then wrap a thick cloth around the coolant pressure cap and turn it slowly until the pressure begins to release. Step back while the pressure is released from the system. When certain all the pressure has been released (still with a cloth) turn and remove the coolant pressure cap from the coolant expansion tank. Failure to follow these instructions may result in personal injury.

Remove fuse 38 from the engine compartment fuse box prior to performing any under hood service in the area of the cooling fan when the engine is hot, since the cooling fan motor could operate if the engine has been switched OFF. Failure to follow this instruction may result in personal injury.

• CAUTIONS:

The engine cooling system must be maintained with the correct concentration and type of anti-freeze solution to prevent corrosion and frost damage.

Never remove the coolant pressure cap under any circumstances while the engine is operating. Failure to follow this instruction may result in damage to the engine.

1. Remove the air cleaner outlet tube.
   For additional information, refer to: Air Cleaner Outlet Pipe (303-12B Intake Air Distribution and Filtering - V8 4.2L Petrol/V8 S/C 4.2L Petrol, Removal and Installation).
2. Detach the thermostat housing hose.
   - Position an absorbant cloth to collect fluid spillage.
   - Clamp the hose, to minimise coolant loss.

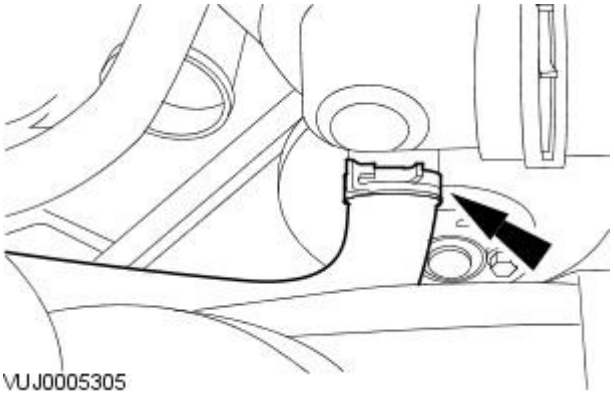


3. Detach the thermostat housing hose.
   - Clamp the bottom hose, to minimise coolant loss.
   - Position an absorbant cloth to collect fluid spillage.

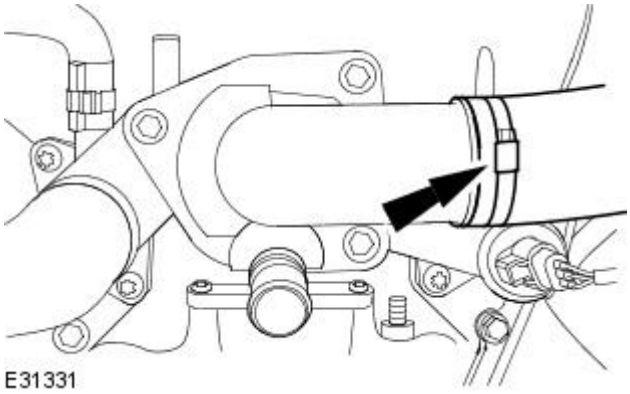


GETtheMANUALS.org

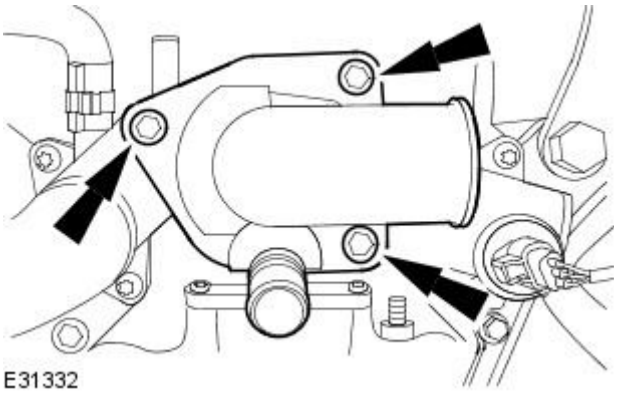
E31332

4. Remove the thermostat.
   - Position an absorbant cloth to collect fluid spillage.

## Installation

1. To install, reverse the removal procedure.
2. Tighten to 9 Nm.

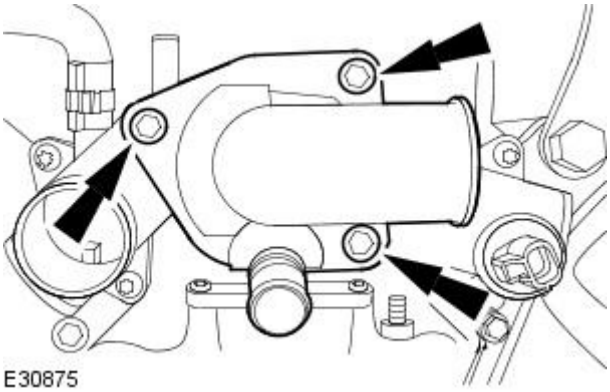
E30875

3. Install the air cleaner outlet tube.
   For additional information, refer to: Air Cleaner Outlet Pipe (303-12B Intake Air Distribution and Filtering - V8 4.2L Petrol/V8 S/C 4.2L Petrol, Removal and Installation).
4. Remove the coolant expansion tank bleed screw.

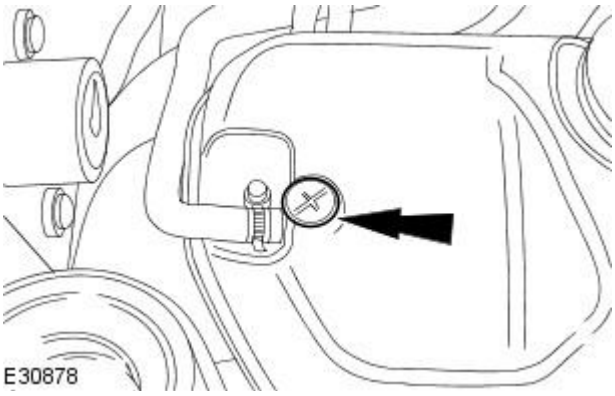
E30878

5. Fill the cooling system up to the MAX mark on the coolant expansion tank using a fifty percent mixture of Jaguar Premium Cooling System Fluid or equivalent, meeting Jaguar specification WSS M97B44-D and fifty percent water.

6. CAUTION: Do not over tighten the coolant expansion tank bleed screw. Failure to follow this instruction may cause damage to the vehicle

   Install the coolant expansion tank bleed screw.
   - Tighten to 1 Nm.

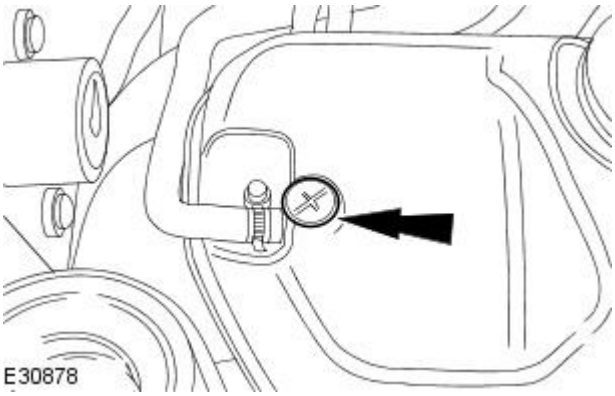
E30878

7. Install the coolant expansion tank pressure cap.

8. CAUTION: Do not RUN the engine with the coolant expansion tank pressure cap removed. Failure to follow this instruction may cause damage to the vehicle

GETtheMANUALS.org

START and RUN the engine.

**9.** SET the heating system to MAX heat, the blower motor to MAX speed and the air distribution to instrument panel registers.

**10.** CAUTION: Observe the engine temperature gauge. If the engine starts to over-heat switch off immediately and allow to cool. Failure to follow this instruction may cause damage to the vehicle.

Allow the engine to RUN until hot air is emitted from the instrument panel registers, while observing the engine temperature gauge.

**11.** Switch off the engine.

**12.** Allow the engine to cool.

**13.** Release the cooling system pressure.

- Remove the coolant expansion tank pressure cap.

**14.** Top up the cooling system.

- Fill the cooling system up to the MAX mark on the coolant expansion tank using a fifty percent mixture of Jaguar Premium Cooling System Fluid or equivalent, meeting Jaguar specification WSS M97B44-D and fifty percent water.

**15.** Install the coolant expansion tank pressure cap.

GETtheMANUALS.org

# Engine Cooling - V8 4.2L Petrol / V8 S/C 4.2L Petrol / 2.5L NA V6 - AJV6 / 3.0L NA V6 - AJ27 - Water Pump4.2L, Vehicles With: Supercharger

Removal and Installation

## Removal

1. Remove fuse 38 from the engine compartment fuse box prior to performing any under hood service in the area of the cooling fan.
2. Drain the cooling system.
   For additional information, refer to Cooling System Draining, Filling and Bleeding in this section.
3. Lower the vehicle.
4. Remove the air cleaner outlet tube. For additional information, refer to Section 303-12A Intake Air Distribution and Filtering / 303-12B Intake Air Distribution and Filtering / 303-12C Intake Air Distribution and Filtering.
5. Detach the supercharger belt.
   - Use a 1/2 inch square drive bar to rotate the supercharger belt tensioner.
     1. Detach the supercharger belt.

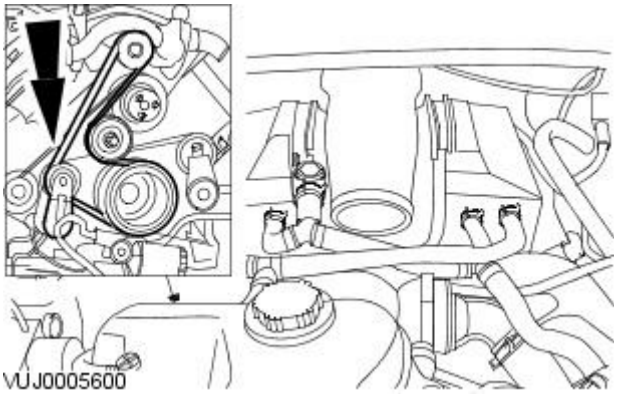


6. Loosen the water pump pulley retaining bolts.

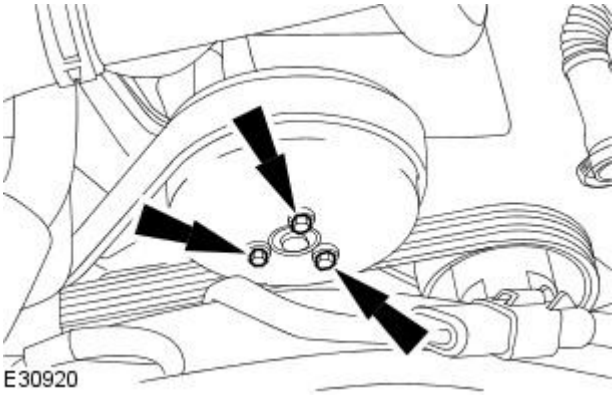


7. Detach the accessory drive belt.
   1. Rotate the accessory drive belt tensioner counter-clockwise.
      1. Use a 3/8 inch square drive bar to rotate the accessory drive belt tensioner.
   2. Detach the accessory drive belt.

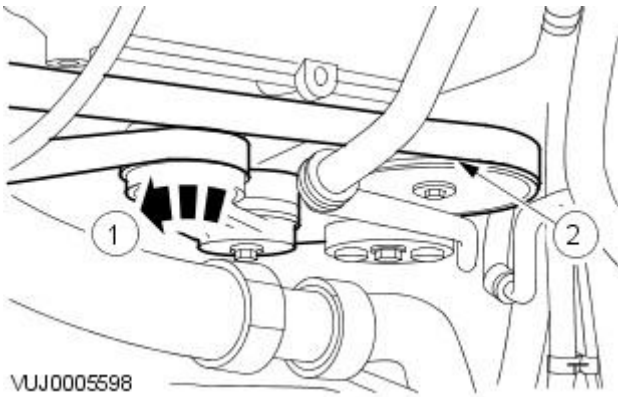


GETtheMANUALS.org

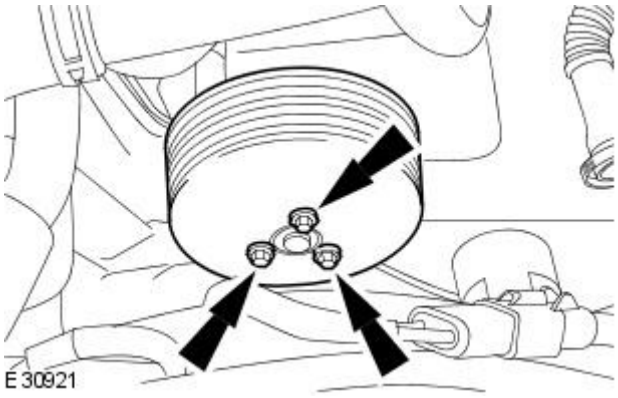


**8.** Remove the water pump pulley.

- Discard the water pump pulley retaining bolts.

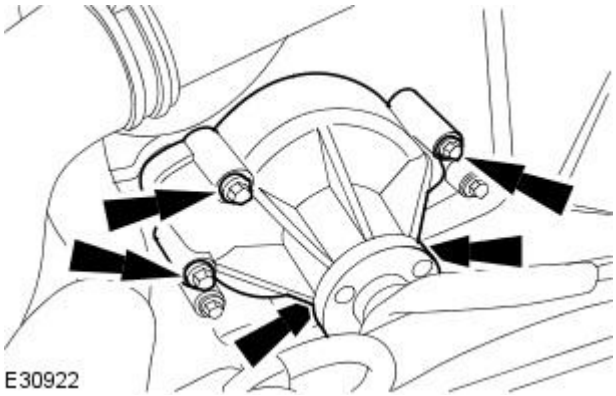


**9.** Remove the water pump.

## Installation

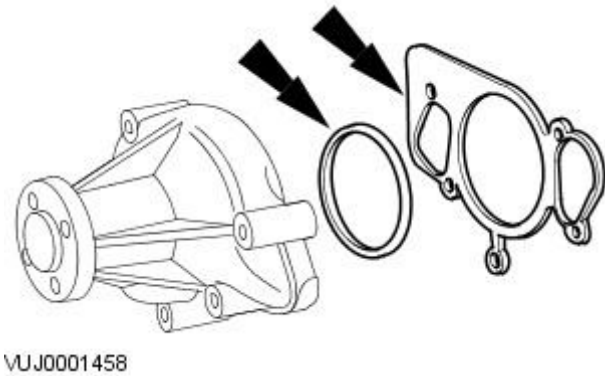


**1.** To install, reverse the removal procedure.

- Install a new water pump gasket and O-ring seal.

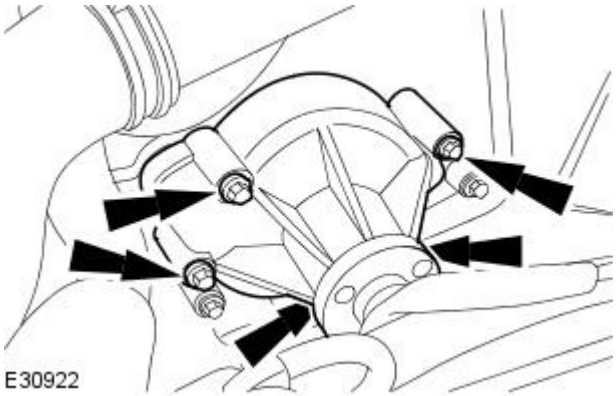


**2.** Tighten to 8 Nm + 90°.

GETtheMANUALS.org

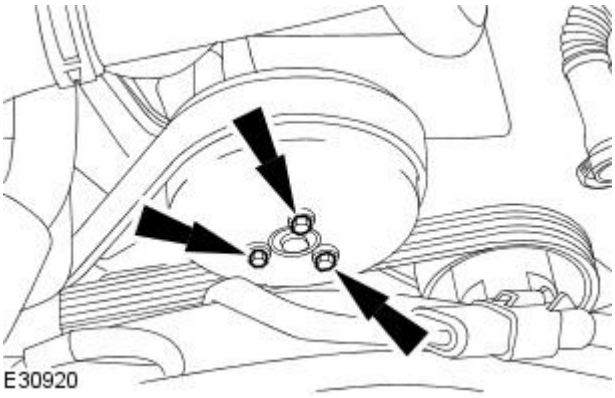


**3.** Tighten to 10 Nm + 45°.

- Install new retaining bolts.

**4.** Fill the cooling system.
For additional information, refer to Cooling System Draining, Filling and Bleeding in this section.

GETtheMANUALS.org

# Engine Cooling - V8 4.2L Petrol / V8 S/C 4.2L Petrol / 2.5L NA V6 - AJV6 / 3.0L NA V6 - AJ27 - Water Pump4.2L, Vehicles Without: Supercharger

Removal and Installation

## Removal

1. Remove fuse 38 from the engine compartment fuse box prior to performing any under hood service in the area of the cooling fan.
2. Drain the cooling system.
   For additional information, refer to Cooling System Draining, Filling and Bleeding in this section.
3. Lower the vehicle.
4. Remove the air cleaner outlet tube. For additional information, refer to Section 303-12A Intake Air Distribution and Filtering / 303-12B Intake Air Distribution and Filtering / 303-12C Intake Air Distribution and Filtering.
5. Loosen the water pump pulley retaining bolts.

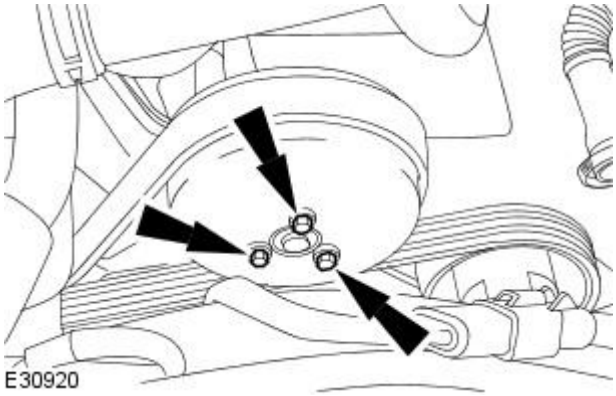


6. Detach the accessory drive belt.
   1. Rotate the accessory drive belt tensioner counter-clockwise.
      1. Use a 3/8 inch square drive bar to rotate the accessory drive belt tensioner.
   2. Detach the accessory drive belt.

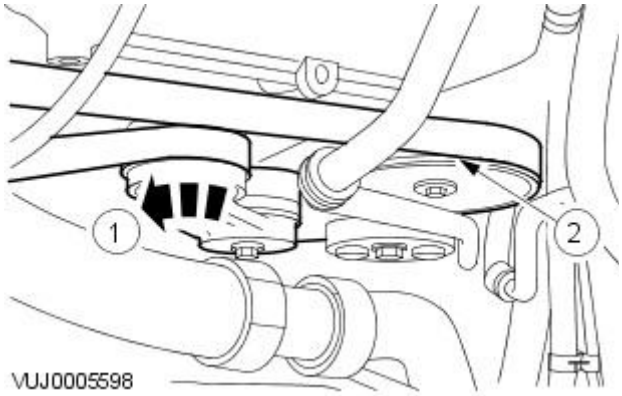


7. Remove the water pump pulley.
   - Discard the water pump pulley retaining bolts.

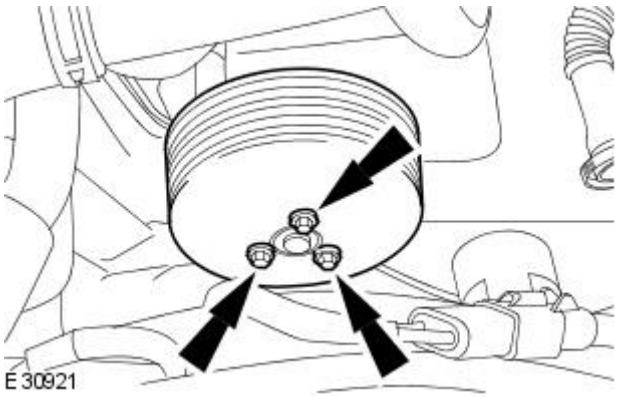


GETtheMANUALS.org

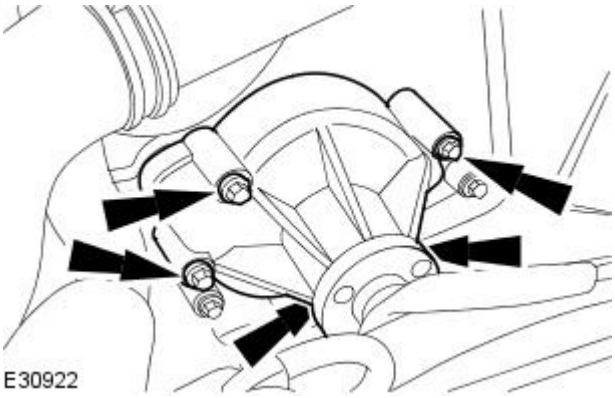


**8.** Remove the water pump.

## Installation

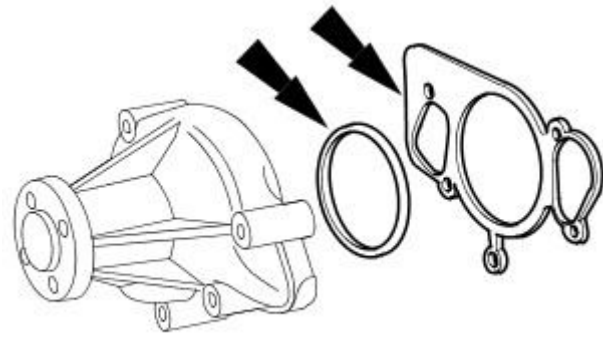


**1.** To install, reverse the removal procedure.

- Install a new water pump gasket and O-ring seal.

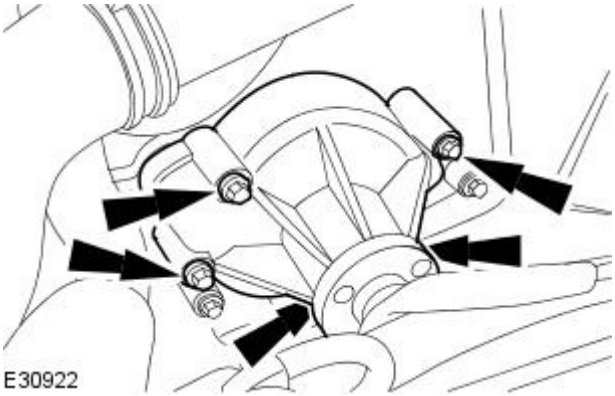


**2.** Tighten to 8 Nm + 90°.

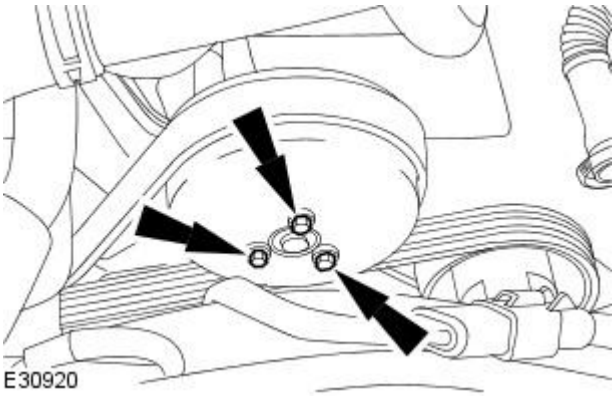


**3.** Tighten to 10 Nm + 45°.

- Install new retaining bolts.

**4.** Fill the cooling system.
For additional information, refer to Cooling System Draining, Filling and Bleeding in this section.

GETtheMANUALS.org

# Supercharger Cooling -

**Torque Specifications**

| Description | Nm | lb-ft | lb-in |
|---|---|---|---|
| Engine oil cooler retaining bolts | 7 | - | 62 |
| Cooling module retaining bolts | 7 | - | 62 |
| Charge air cooler water pump bracket retaining bolts | 7 | - | 62 |
| Charge air cooler radiator drain plug | 1 | - | 9 |
| Coolant expansion tank bleed screw | 1 | - | 9 |
| Supercharger coolant fill plug | 45 | 33 | - |

**Lubricants, Fluids, Sealers and Adhesives**

| Description | Specification |
|---|---|
| Jaguar Premium Cooling System Fluid | WSS M97B44-D |

GETtheMANUALS.org

# Supercharger Cooling - Supercharger Cooling

Description and Operation

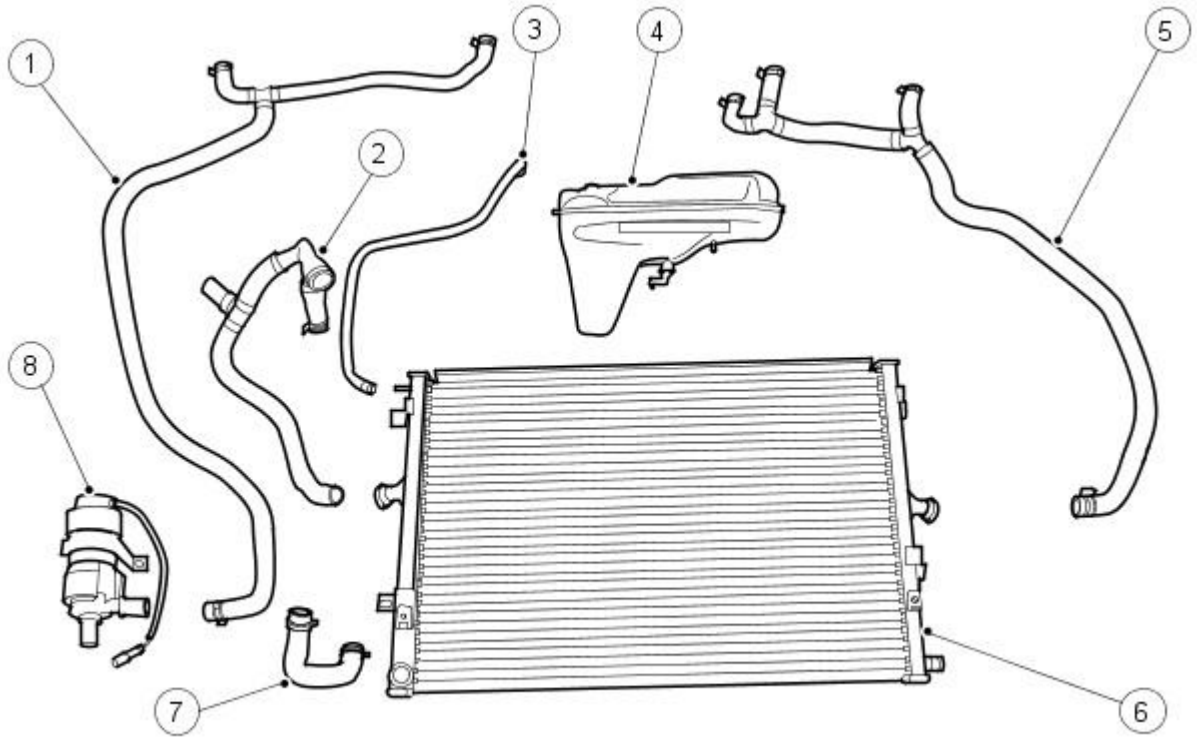


VUJ0005579

| Item | Part Number | Description |
|---|---|---|
| 1 | — | Coolant hose - water pump to charge air coolers. |
| 2 | — | Coolant hose - coolant expansion tank to radiator. |
| 3 | — | Coolant hose - radiator vent. |
| 4 | — | Coolant expansion tank. |
| 5 | — | Coolant hose - charge air coolers to radiator. |
| 6 | — | Radiator. |
| 7 | — | Coolant hose - radiator to water pump to. |
| 8 | — | Water pump. |

Supercharger cooling coolant flow

GETtheMANUALS.org

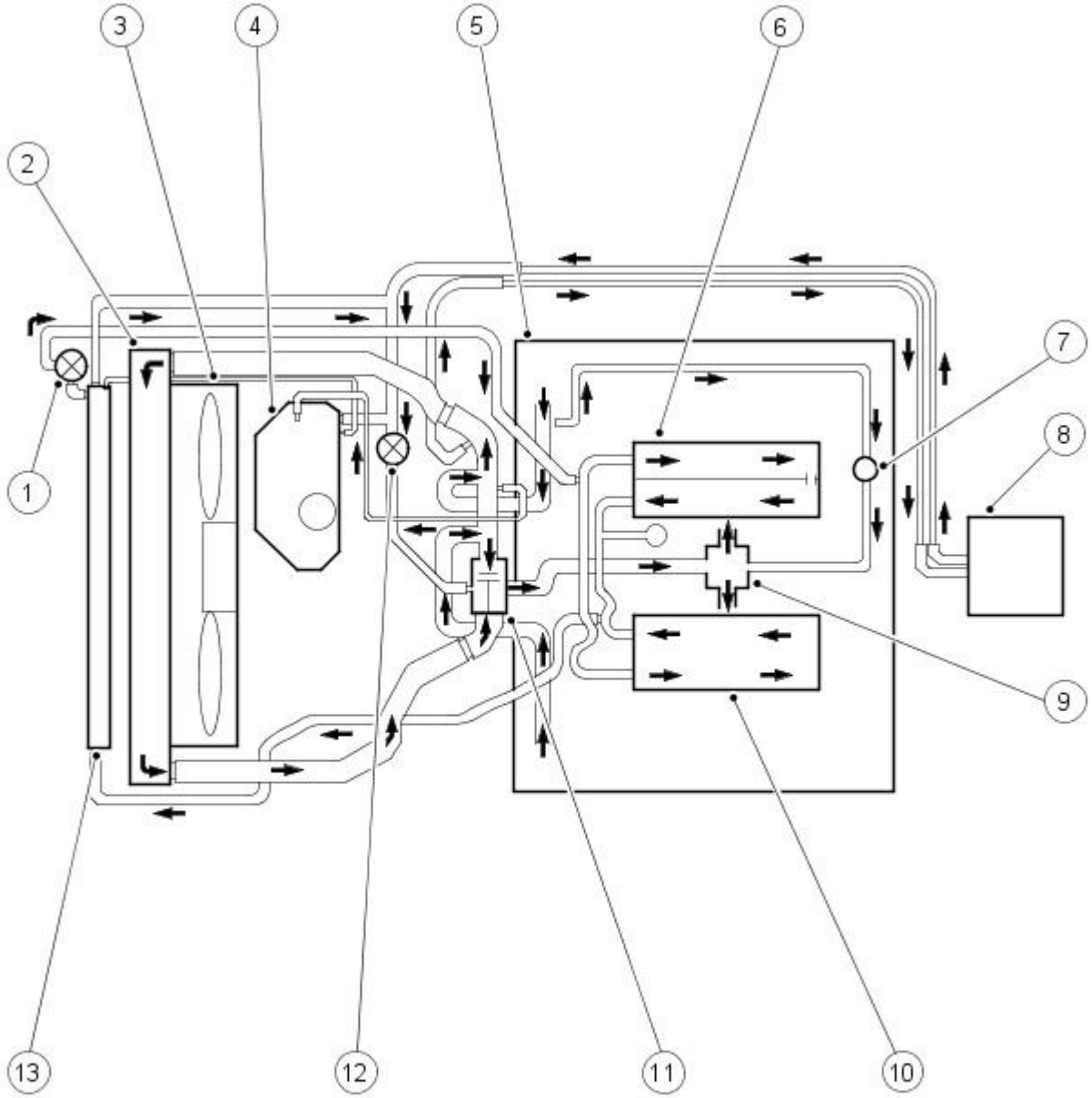


E30263

| Item | Part Number | Description |
|---|---|---|
| 1 | — | Charge air cooler water pump. |
| 2 | — | Radiator. |
| 3 | — | Cooling fan. |
| 4 | — | Coolant expansion tank. |
| 5 | — | Engine. |
| 6 | — | Charge air cooler. |
| 7 | — | Throttle housing. |
| 8 | — | Heater core. |
| 9 | — | Cooling system water pump. |
| 10 | — | Charge air cooler. |
| 11 | — | Thermostat. |
| 12 | — | Auxiliary coolant flow pump. |
| 13 | — | Charge air cooler radiator. |

The supercharger cooling system is integrated with in the engine cooling system but uses a separate radiator and electrical water pump.

Radiator

The supercharger radiator is of aluminium construction. The radiator is mounted to the cooling module between the oil cooler and the air conditioning condenser. A coolant drain plug is located at the left-hand bottom of the radiator.

Water pump

The charge air cooler water pump is electrically driven, continuously while the ignition is on. The charge air cooler water pump provides an efficient coolant flow to the charge air coolers.

GETtheMANUALS.org

# Supercharger Cooling - Supercharger Cooling

Diagnosis and Testing

1. **1.** Verify the customer concern by operating the system.
2. **2.** Visually inspect for obvious signs of mechanical and electrical damage.

**Visual Inspection Chart**

| Mechanical | Electrical |
|---|---|
| • Leak(s)<br>• Hose(s)<br>• Charge air cooler radiator<br>• Supercharger cooling water pump<br>• Coolant expansion tank<br>• Coolant pressure cap<br>• Radiator<br>• Engine cooling water pump<br>• Cooling fan | • Fuse(S)<br>• Wiring harness<br>• Electrical connector(S)<br>• Engine coolant temperature sensor<br>• Cooling fan motor<br>• Supercharger cooling water pump |

3. **3.** If an obvious cause for an observed or reported concern is found, correct the cause (if possible) before proceeding to the next step.
4. **4.** If the cause is not visually evident, verify the symptom and refer to the Jaguar Approved Diagnostic System.

Component tests

Pressure test. REFER to Section 303-03A Engine Cooling / 303-03B Supercharger Cooling / 303-03C Engine Cooling. Coolant pressure cap pressure test. REFER to Section 303-03A Engine Cooling / 303-03B Supercharger Cooling / 303-03C Engine Cooling. Thermostat test. REFER to Section 303-03A Engine Cooling / 303-03B Supercharger Cooling / 303-03C Engine Cooling. Radiator leak test. REFER to Section 303-03A Engine Cooling / 303-03B Supercharger Cooling / 303-03C Engine Cooling.

GETtheMANUALS.org

# Supercharger Cooling - Supercharger Cooling System Draining, Filling and Bleeding

General Procedures

**1.** WARNINGS:

Never remove the coolant expansion tank pressure cap under any circumstances while the engine is operating. Failure to follow this instruction may result in personal injury.

To avoid hot coolant or steam blowing out of the cooling system, use extreme care when removing the coolant expansion tank pressure cap. Wait until the engine has cooled down, then insulate the coolant pressure cap with a suitable cloth and slowly loosen the coolant expansion tank pressure cap until the cooling system pressure is released. Do not remove the coolant expansion tank pressure cap. Step back while the pressure is released from the system. When all of the pressure has been released slowly remove the coolant expansion tank pressure cap (still with the suitable cloth in position) from the coolant expansion tank. Failure to follow this instruction may result in personal injury.

Prior to performing any under hood servicing in the area of the cooling fans when the engine is hot, disconnect the electrical supply to the cooling fans as the cooling fans may operate if the ignition is switched off. Failure to follow this instruction may result in personal injury.

Release the cooling system pressure.

- Remove the coolant expansion tank pressure cap.

**2.** Remove the radiator splash shield.
For additional information, refer to Section 501-02 Front End Body Panels.

**3.** Remove the radiator lower cowl.

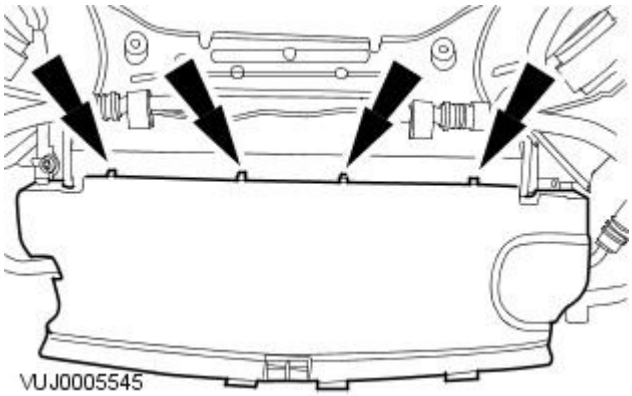


**4.** Remove the radiator drain plug.

- Drain the coolant into a suitable container.

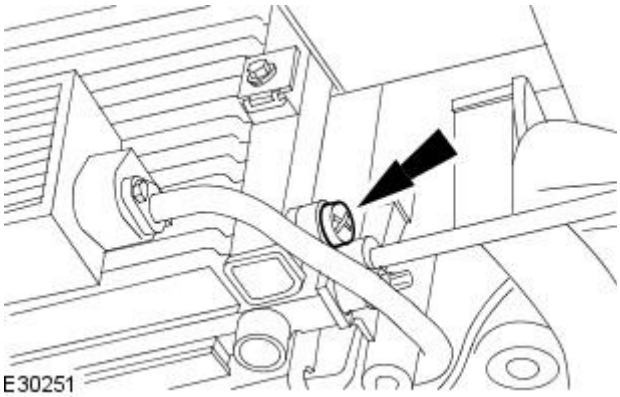


GETtheMANUALS.org

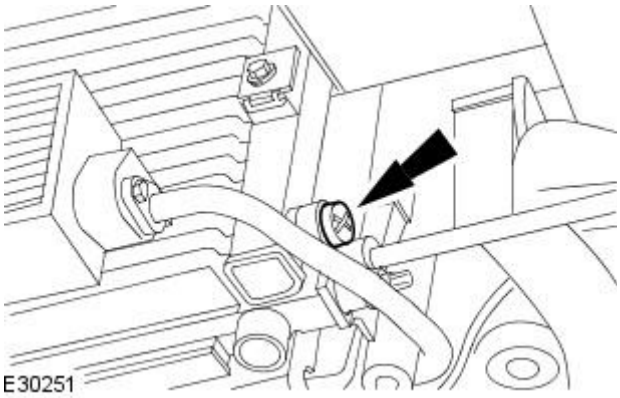


**5.** CAUTION: Do not over tighten the radiator drain plug. Failure to follow this instruction may cause damage to the vehicle.

Install the radiator drain plug when all coolant has drained.

- Tighten to 1 Nm.
- Remove the container.
- Clean off any spillages.

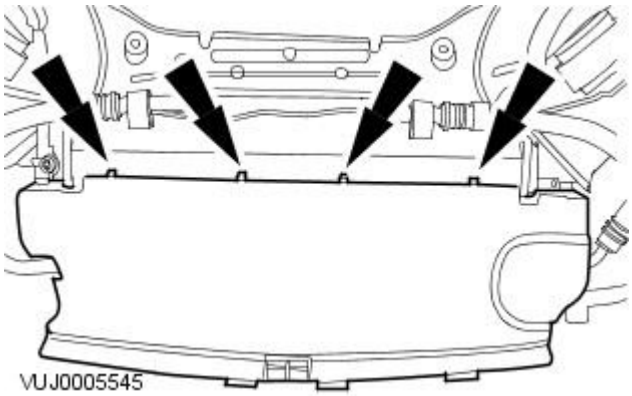


**6.** Install the radiator lower cowl.

**7.** Install the radiator splash shield.
For additional information, refer to Section 501-02 Front End Body Panels.

**8.** Remove the coolant expansion tank bleed screw.

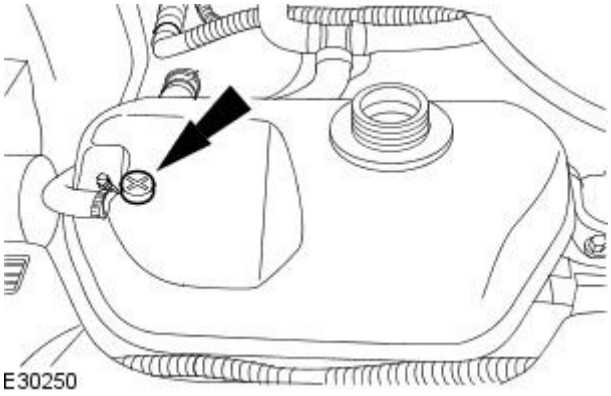


**9.** CAUTION: The supercharger cooling system must be maintained with the correct concentration and type of coolant solution to prevent corrosion and frost damage.

Fill the cooling system up to the MAX mark on the coolant expansion tank using a fifty percent mixture of Jaguar Premium Cooling System Fluid or equivalent, meeting Jaguar specification WSS M97B44-D and fifty percent water.

**10.** CAUTION: Do not over tighten the coolant expansion tank bleed screw. Failure to follow this instruction may cause damage to the vehicle

Install the coolant expansion tank bleed screw.

- Tighten to 1 Nm.

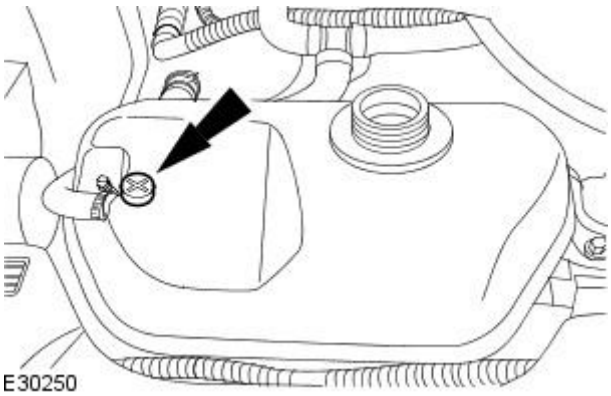


**11.** Install the coolant expansion tank pressure cap.

**12.** Remove the engine cover.

GETtheMANUALS.org

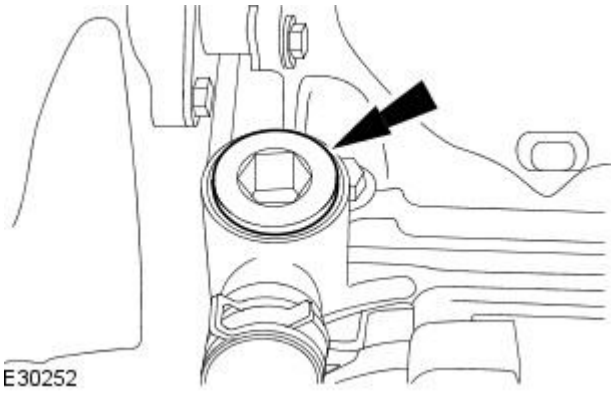


**13.** Remove the supercharger coolant filler plug.

- Remove and discard the sealing washer.

**14.** NOTE: Place a suitable cloth around supercharger fill port.

Top up the coolant through the supercharger fill port.

**15.** CAUTION: Coolant may spill from supercharger fill port when ignition switched on.

Switch ignition on.

**16.** CAUTION: Do not allow the supercharger water pump to run dry for more than one minute. Failure to follow this instruction may result in damage to the vehicle.

Allow the supercharger pump to run and top up the coolant through supercharger fill port.

**17.** Switch the ignition off.

**18.** Install the supercharger coolant fill plug.

- Install a new sealing washer.
- Tighten to 45 Nm.
- Clean off any spillages.

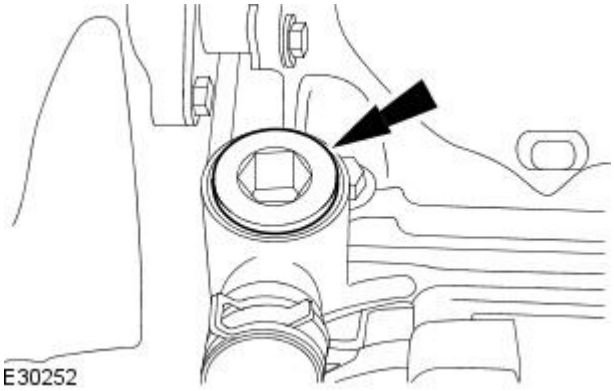


**19.** Install the engine cover.

**20.** CAUTION: Do not RUN the engine with the coolant expansion tank pressure cap removed. Failure to follow this instruction may cause damage to the vehicle

START and RUN the engine.

**21.** SET the heating system to MAX heat, the blower motor to MAX speed and the air distribution to instrument panel registers.

**22.** CAUTION: Observe the engine temperature gauge. If the engine starts to over-heat switch off immediately and allow to cool. Failure to follow this instruction may cause damage to the vehicle.

Allow the engine to RUN until hot air is emitted from the instrument panel registers, while observing the engine temperature gauge.

**23.** Switch off the engine.

**24.** Allow the engine to cool.

**25.** Release the cooling system pressure.

- Remove the coolant expansion tank pressure cap.

**26.** Fill the cooling system up to the MAX mark on the coolant expansion tank using a fifty percent mixture of Jaguar Premium Cooling System Fluid or equivalent, meeting Jaguar specification WSS M97B44-D and fifty percent water.

**27.** Install the coolant expansion tank pressure cap.

GETtheMANUALS.org

# Supercharger Cooling - Radiator

Removal and Installation

## Removal

1. Remove the water pump.
   For additional information, refer to Water Pump in this section.
2. Remove the oil cooler.For additional information, refer to Section 303-01A Engine / 303-01B Engine / 303-01C Engine.
3. Lower the vehicle.
4. Disconnect the radiator coolant vent hose.

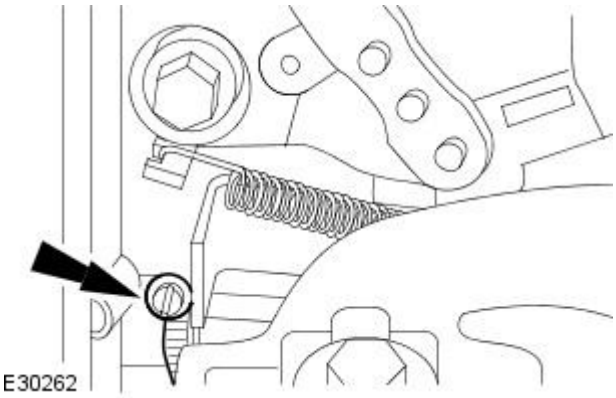


5. Raise the vehicle.
6. Disconnect the left-hand radiator hose.

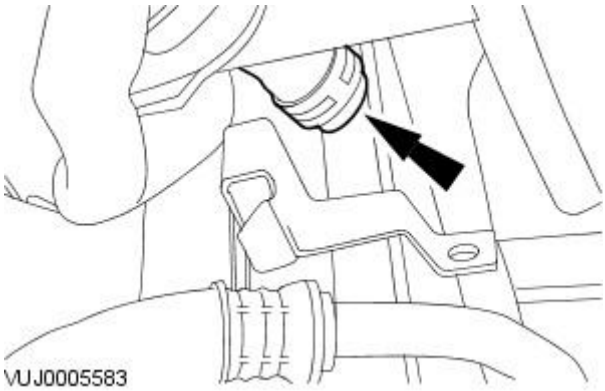


7. Disconnect the right-hand radiator hose.

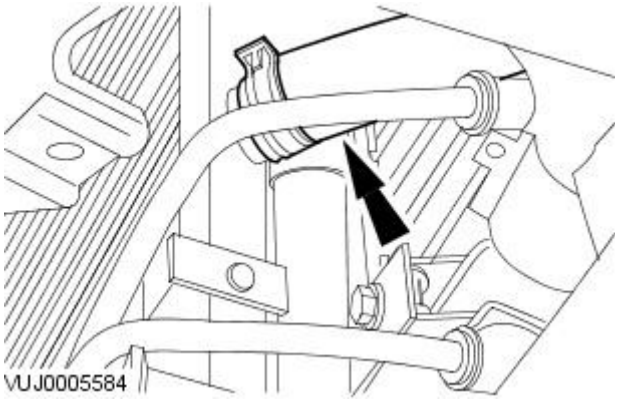


8. Remove the water pump retaining bracket.
   1. Remove the retaining bolt.
   2. Remove the water pump retaining bracket.

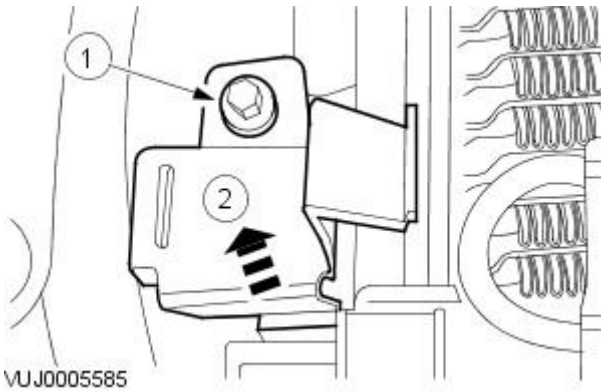


GETtheMANUALS.org

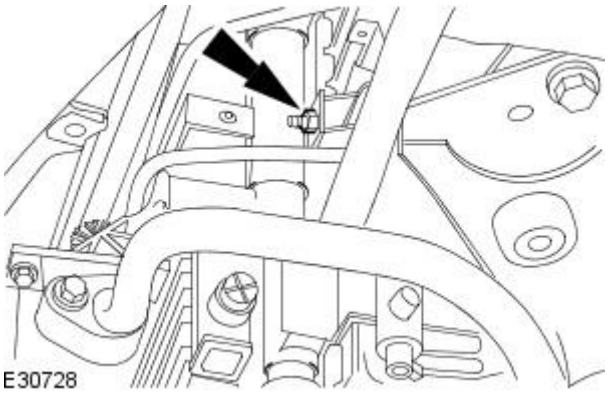


**9.** Remove the cooling module retaining bolt.

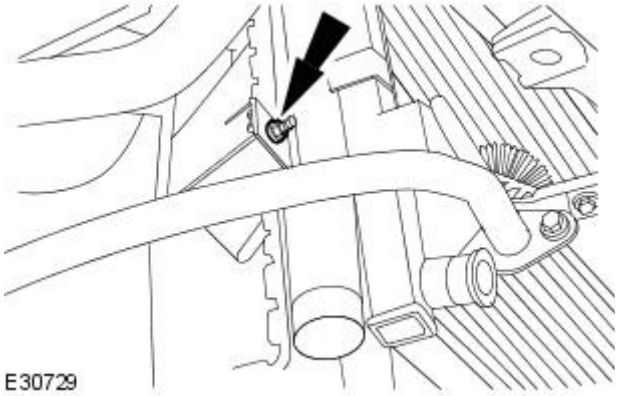


**10.** Remove the cooling module retaining bolt.

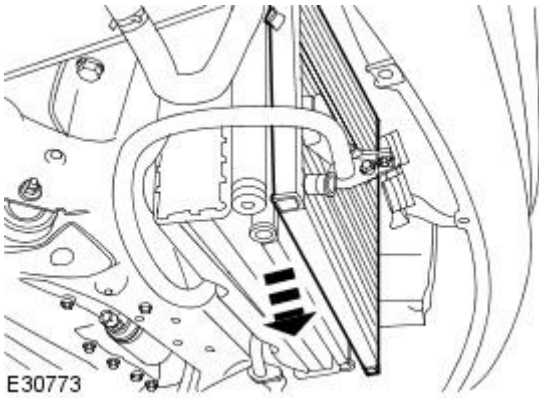


**11.** Remove the radiator.

## Installation

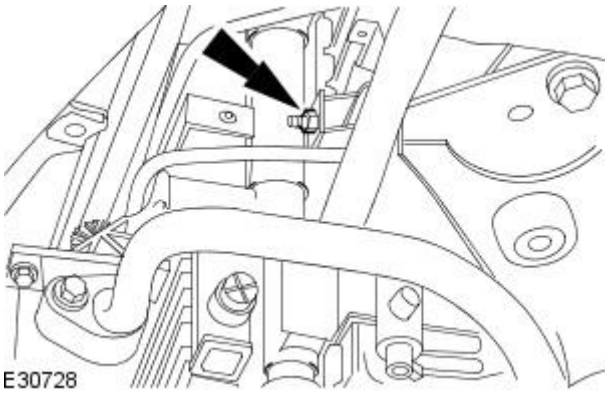


**1.** To install, reverse the removal procedure.

- Tighten to 7 Nm.

GETtheMANUALS.org

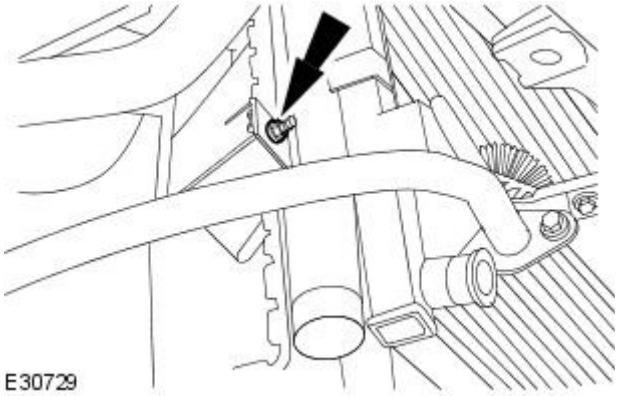


**2.** Tighten to7 Nm.

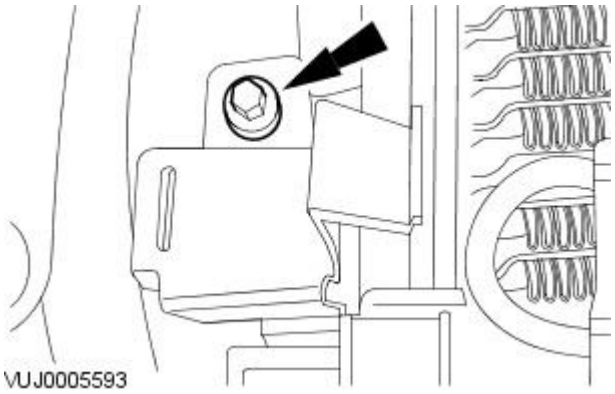


**3.** Tighten to 7 Nm.

GETtheMANUALS.org

# Supercharger Cooling - Water Pump

Removal and Installation

## Removal

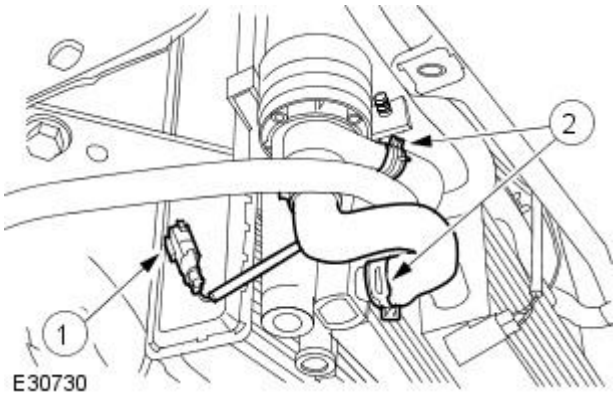


1. Carry out the supercharging cooling system draining procedure.
   For additional information, refer to: Supercharger Cooling System Draining, Filling and Bleeding (303-03B Supercharger Cooling, General Procedures).
2. Disconnect the water pump coolant hoses.
   1. Disconnect the water pump electrical connector.
   2. Disconnect the water pump coolant hoses.

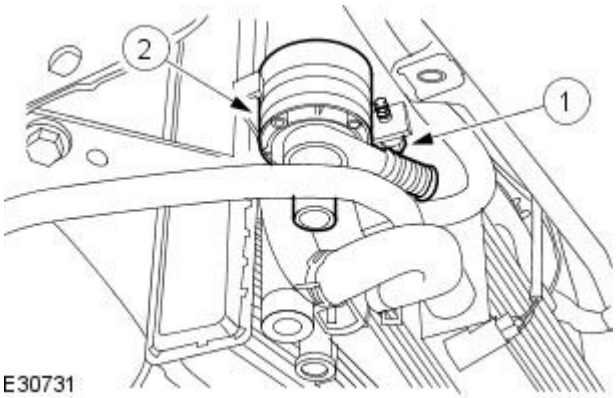


3. Remove the water pump.
   1. Remove the water pump retaining bolt.
   2. Remove the water pump.

## Installation

1. To install, reverse the removal procedure.
2. Carry out the supercharging cooling system filling and bleeding procedure.
   For additional information, refer to: Supercharger Cooling System Draining, Filling and Bleeding (303-03B Supercharger Cooling, General Procedures).
3. NOTE: For NAS vehicles only.

   If required, carry out a long drive cycle.
   For additional information, refer to: Powertrain Control Module (PCM) Long Drive Cycle Self-Test (303-14A Electronic Engine Controls - 2.5L NA V6 - AJV6/3.0L NA V6 - AJ27, General Procedures).

GETtheMANUALS.org

# Engine Cooling - 2.7L V6 - TdV6 -

**Lubricants, Fluids, Sealers and Adhesives**

| Description | Specification |
|---|---|
| Jaguar Premium Cooling System Fluid | WSS M97B44-D |
| Jaguar Premium Cooling System Flush | EGR-M14P7-A |

**Capacities**

| Description | Liters |
|---|---|
| Cooling system refill | 13.5 |

**Torque Specifications**

| Description | Nm | lb-ft | lb-in |
|---|---|---|---|
| Coolant expansion tank retaining bolt | 7 | - | 62 |
| Coolant expansion tank bleed screw | 3 | - | 27 |
| Cooling fan motor and shroud retaining bolts | 7 | - | 62 |
| Water pump retaining bolts | 10 | - | 89 |
| Water pump pulley retaining bolts | 24 | 18 | - |
| Charge air cooler to radiator retaining bolts | 7 | - | 62 |
| Air conditioning condenser retaining bolts | 7 | - | 62 |
| Radiator mounting bracket retaining bolts | 7 | - | 62 |
| Charge air cooler intake elbow | 7 | - | 62 |
| Radiator drain plug | 2 | - | 13 |

GETtheMANUALS.org

# Engine Cooling - 2.7L V6 - TdV6 - Engine Cooling

Description and Operation

## Vehicles with Manual Transmission

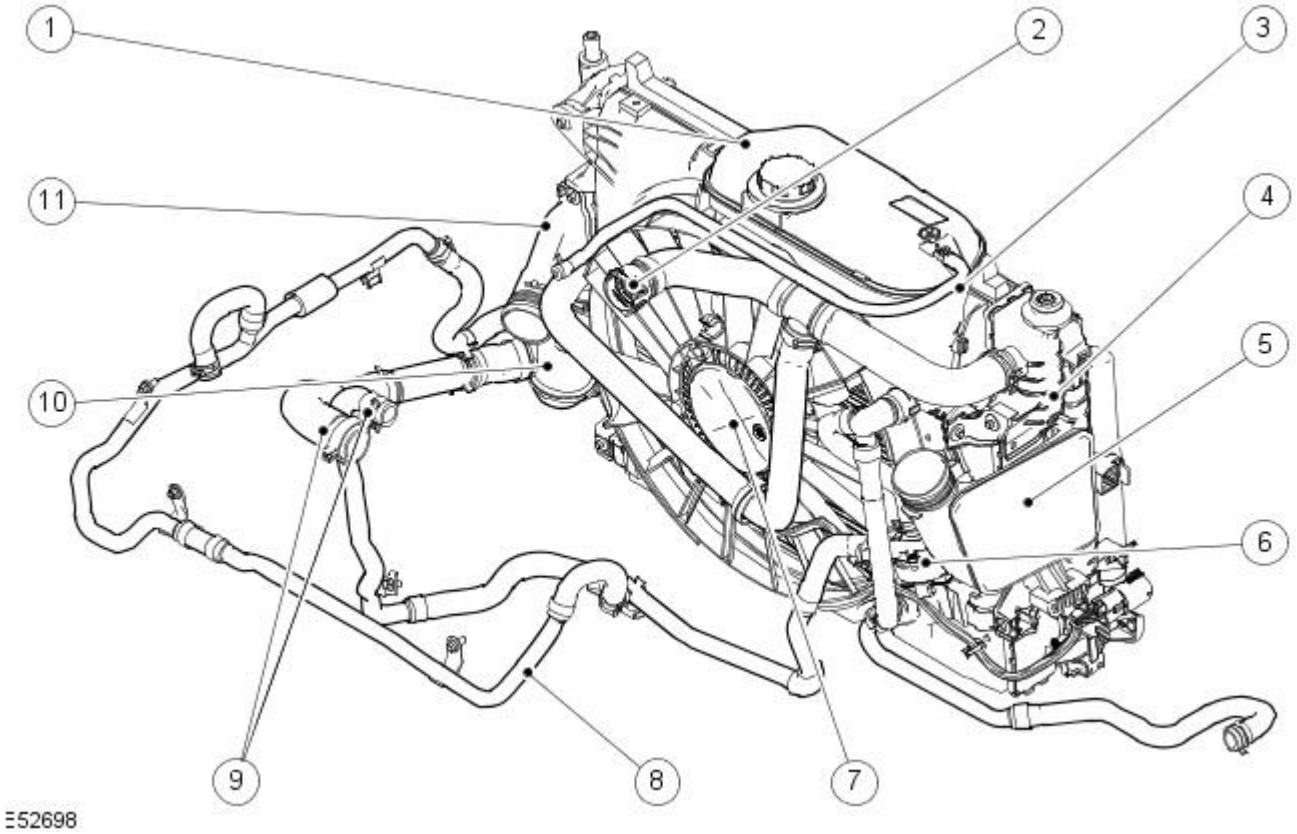


| Item | Part Number | Description |
|---|---|---|
| 1 | — | Coolant expansion tank |
| 2 | — | Engine coolant outlet |
| 3 | — | Vent hose |
| 4 | — | Radiator |
| 5 | — | Charge air cooler outlet |
| 6 | — | Auxiliary coolant flow pump |
| 7 | — | Cooling fan motor |
| 8 | — | Exhaust gas re-circulation coolant hose |
| 9 | — | Engine coolant inlet |
| 10 | — | Thermostat housing |
| 11 | - | Charge air cooler inlet |

## Vehicles with Automatic Transmission

GETtheMANUALS.org

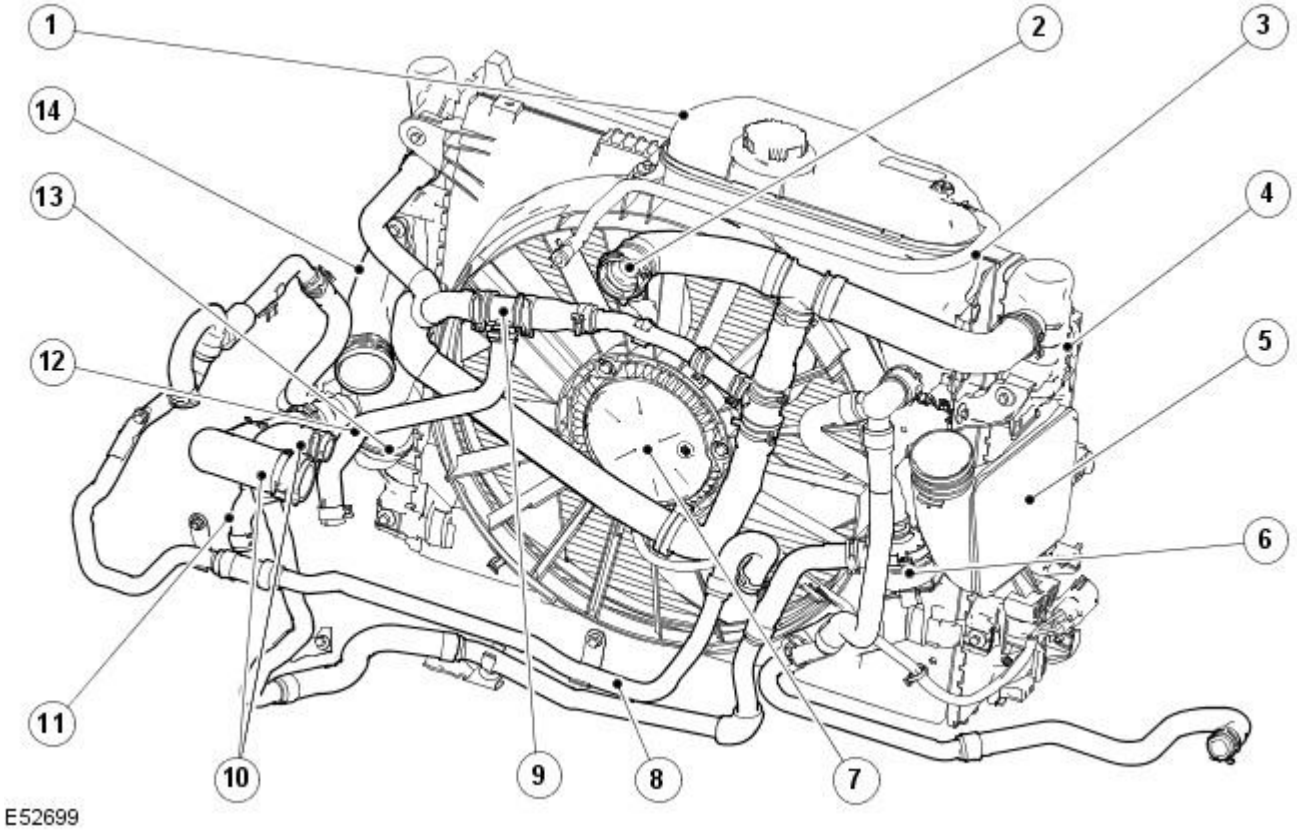


| Item | Part Number | Description |
|---|---|---|
| 1 | — | Coolant expansion tank |
| 2 | — | Engine coolant outlet |
| 3 | — | Vent hose |
| 4 | — | Radiator |
| 5 | — | Charge air cooler outlet |
| 6 | — | Auxiliary coolant flow pump |
| 7 | — | Cooling fan motor |
| 8 | — | Exhaust gas re-circulation coolant hose |
| 9 | — | Transmission oil cooler coolant control valve |
| 10 | — | Engine coolant inlet |
| 11 | — | Transmission oil cooler inlet |
| 12 | — | Transmission oil cooler outlet |
| 13 | — | Thermostat housing |
| 14 | - | Charge air cooler inlet |

**Engine Cooling System Components**

GETtheMANUALS.org

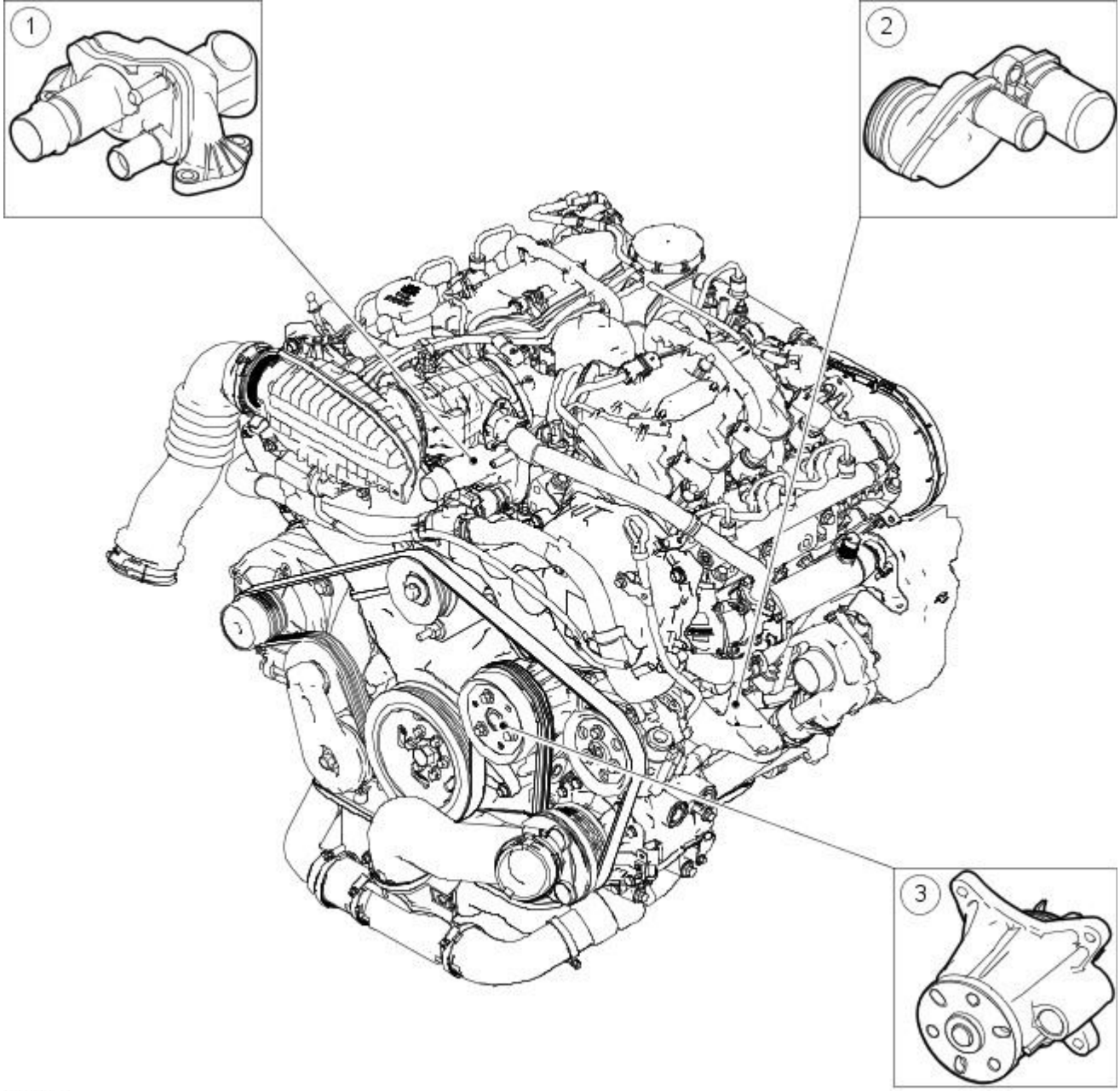


E52700

| Item | Part Number | Description |
|---|---|---|
| 1 | — | Engine coolant outlet assembly |
| 2 | — | Engine coolant inlet assembly |
| 3 | — | Water pump |

## Water Pump

The water pump is of a conventional design and is driven by the crankshaft pulley through the accessory drive belt. The water pump belt tension is maintained by an automatic drive belt tensioner.
For additional information, refer to: Accessory Drive (303-05 Accessory Drive, Description and Operation).

## Thermostat

The thermostat is located in the thermostat housing and allows rapid engine warm-up by restricting coolant flow through the radiator below approximately 92°C (198°F). The thermostat also assists in keeping the engine operating temperature within predetermined limits.

When the engine is cold and the thermostat is closed, coolant flows from the water pump through the engine. It then returns to the water pump through the upper coolant hose.

When the engine is warm and the thermostat is open, coolant flows into the radiator through the upper coolant hose. It then returns to the water pump from the radiator through the lower coolant hose and engine oil cooler.

The heater core is on a parallel circuit and is unaffected by the position of the thermostat.

## Radiator

The radiator is of aluminium construction with plastic end tanks. Foam seals are fitted to the radiator to prevent the cooling air from by passing the radiator core. A coolant drain plug is provided in the lower coolant end tank of the radiator for the draining of the coolant. The cooling fan shroud is attached to the radiator.

## Cooling Fan

A single, variable speed cooling fan motor is attached to a fan shroud located behind the radiator. The speed is determined by the Engine Coolant Temperature (ECT) and the air conditioning pressure and transmission oil temperature.

GETthemANUALS.org

Under hot operating conditions, the fan may continue to operate for four minutes after the engine has been switched off.

## Coolant Recovery System

A pressurized coolant expansion tank system is used which continuously separates the air from the cooling system and replenishes the system through the coolant expansion tank outlet hose, attached to the heater return hose.

A continuous vent from the engine and radiator to the coolant expansion tank prevents air locks from forming in the cooling system.

A manual bleed point is provided on the coolant reservoir.

The coolant expansion tank serves as the location for:

- Service fill.
- Coolant expansion during warm-up.
- Air separation during operation.
- System pressurization by the coolant pressure cap.
- The coolant expansion tank is designed to have approximately 0.5 to 1 liter of air when cold to allow for coolant expansion.

## Engine Coolant

The long life engine coolant is formulated to last for five years or 240,000 km (150,000 miles). The coolant is silicate free and orange in color. The long life engine coolant must not be mixed with conventional engine coolant.

## Coolant Flow Diagram (Thermostat open)

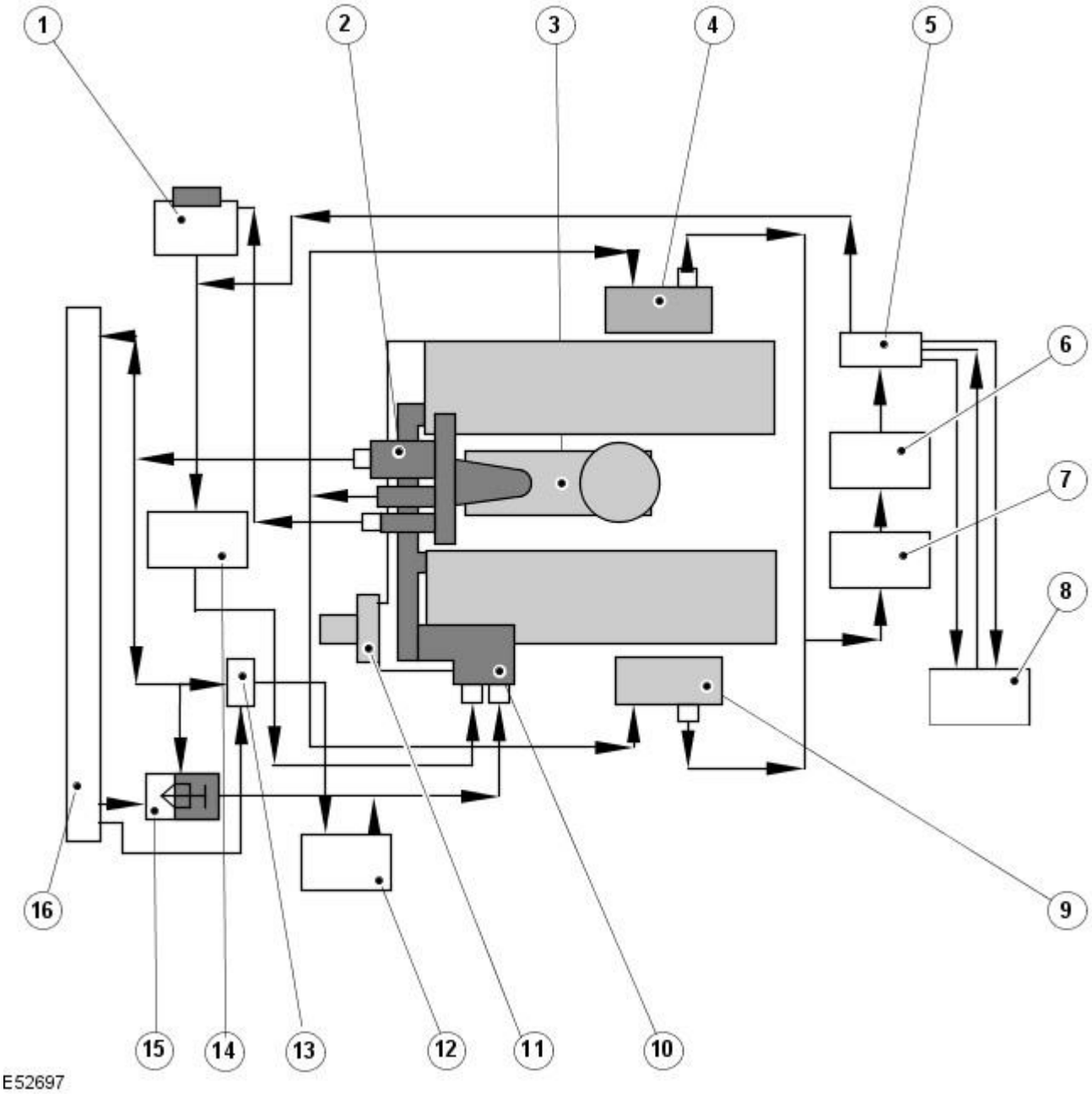


| Item | Part Number | Description |
|---|---|---|
| 1 | — | Coolant expansion tank |
| 2 | — | Engine coolant outlet |
| 3 | — | Engine oil and fuel cooler |
| 4 | — | EGR cooler |
| 5 | — | Dual coolant flow valve |
| 6 | — | Temperature sensor (integral to auxiliary heater) |
| 7 | — | Auxiliary heater |
| 8 | — | Heater core |
| 9 | — | EGR cooler |
| 10 | — | Engine coolant inlet |
| 11 | — | Water pump |

GETtheMANUALS.org

| | | |
|---|---|---|
| 12 | — | Transmission oil cooler |
| 13 | — | Transmission oil cooler coolant control valve |
| 14 | — | Auxiliary coolant flow pump |
| 15 | - | Thermostat |
| 16 | - | Radiator |

GETtheMANUALS.org

# Engine Cooling - 2.7L V6 - TdV6 - Engine Cooling

Diagnosis and Testing

1. **1.** Verify the customer concern.
2. **2.** Visually inspect for obvious signs of mechanical or electrical damage.

**Visual inspection chart**

| Mechanical | Electrical |
|---|---|
| • Coolant leaks<br>• Hoses<br>• Expansion tank<br>• Radiator<br>• Accessory drive belt<br>• Cooling fan | • Fuses<br>• Harnesses and connectors<br>• Engine coolant temperature (ECT) sensor (where fitted)<br>• Cylinder head temperature (CHT) sensor (where fitted) |

3. **3.** If an obvious cause for an observed or reported concern is found, correct the cause (if possible) before proceeding to the next step.
4. **4.** If the concern is not visually evident, verify the symptom and refer to the symptom chart.
5. **5.** Using the Jaguar approved diagnostic system where available, and a suitable scantool where not, check for diagnostic trouble codes (DTC)

**Symptom Chart**

| DTC | Condition | Possible Source | Action |
|---|---|---|---|
| P0116 | Engine coolant temperature (ECT) sensor, range/performance | • Low/Contaminated coolant<br>• Thermostat failure<br>• Overheating<br>• ECT sensor<br>• ECT sensor circuit(s) | Check the coolant level and condition, REFER to: Cooling System Draining, Filling and Bleeding (303-03A Engine Cooling - V8 4.2L Petrol/V8 S/C 4.2L Petrol/2.5L NA V6 - AJV6/3.0L NA V6 - AJ27, General Procedures).<br>Check the thermostat operation, GO to Pinpoint Test B. GO to Pinpoint Test C. For ECT sensor and circuit tests, REFER to:<br>Electronic Engine Controls - VIN Range: M45255->N52047 (303-14A Electronic Engine Controls - 2.5L NA V6 - AJV6/3.0L NA V6 - AJ27, Diagnosis and Testing),<br>Electronic Engine Controls - VIN Range: N80181->R99999 (303-14B Electronic Engine Controls - V8 4.2L Petrol/V8 S/C 4.2L Petrol, Diagnosis and Testing),<br>Electronic Engine Controls - VIN Range: M45255->N52047 (303-14B Electronic Engine Controls - V8 4.2L Petrol/V8 S/C 4.2L Petrol, Diagnosis and Testing),<br>Electronic Engine Controls - VIN Range: N80181->R99999 (303-14B Electronic Engine Controls - V8 4.2L Petrol/V8 S/C 4.2L Petrol, Diagnosis and Testing),<br>Electronic Engine Controls (303-14C Electronic Engine Controls - 2.7L V6 - TdV6, Diagnosis and Testing). |
| P0117 | Engine coolant temperature (ECT) sensor, low input | • ECT sensor<br>• ECT sensor circuit (short circuit to ground/open circuit) | REFER to:<br>Electronic Engine Controls - VIN Range: M45255->N52047 (303-14A Electronic Engine Controls - 2.5L NA V6 - AJV6/3.0L NA V6 - AJ27, Diagnosis and Testing),<br>Electronic Engine Controls - VIN Range: N80181->R99999 (303-14B Electronic Engine Controls - V8 4.2L Petrol/V8 S/C 4.2L Petrol, Diagnosis and Testing),<br>Electronic Engine Controls - VIN Range: M45255->N52047 (303-14B Electronic Engine Controls - V8 4.2L Petrol/V8 S/C 4.2L Petrol, Diagnosis and Testing),<br>Electronic Engine Controls - VIN Range: N80181->R99999 (303-14B Electronic Engine Controls - V8 4.2L Petrol/V8 S/C 4.2L Petrol, Diagnosis and Testing),<br>Electronic Engine Controls (303-14C Electronic Engine Controls - 2.7L V6 - TdV6, Diagnosis and Testing). |
| P0118 | Engine coolant temperature (ECT) sensor, high input | • ECT sensor<br>• ECT sensor circuit (short circuit to ground/open circuit) | REFER to:<br>Electronic Engine Controls - VIN Range: M45255->N52047 (303-14A Electronic Engine Controls - 2.5L NA V6 - AJV6/3.0L NA V6 - AJ27, Diagnosis and Testing),<br>Electronic Engine Controls - VIN Range: N80181->R99999 (303-14B Electronic Engine Controls - V8 4.2L Petrol/V8 S/C 4.2L Petrol, Diagnosis and Testing),<br>Electronic Engine Controls - VIN Range: M45255->N52047 (303-14B Electronic Engine Controls - V8 4.2L Petrol/V8 S/C 4.2L Petrol, Diagnosis and Testing),<br>Electronic Engine Controls - VIN Range: N80181->R99999 (303-14B Electronic Engine Controls - V8 4.2L Petrol/V8 S/C 4.2L Petrol, Diagnosis and Testing),<br>Electronic Engine Controls (303-14C Electronic Engine Controls - 2.7L V6 - TdV6, Diagnosis and Testing). |
| P0125 | Engine coolant temperature (ECT) sensor, insufficient for close loop control | • ECT sensor<br>• ECT sensor circuit (short circuit to ground/open circuit) | REFER to:<br>Electronic Engine Controls - VIN Range: M45255->N52047 (303-14A Electronic Engine Controls - 2.5L NA V6 - AJV6/3.0L NA V6 - AJ27, Diagnosis and Testing),<br>Electronic Engine Controls - VIN Range: N80181->R99999 (303-14B Electronic Engine Controls - V8 4.2L Petrol/V8 S/C 4.2L Petrol, Diagnosis and Testing),<br>Electronic Engine Controls - VIN Range: M45255->N52047 (303-14B Electronic Engine Controls - V8 4.2L Petrol/V8 S/C 4.2L Petrol, Diagnosis and Testing),<br>Electronic Engine Controls - VIN Range: N80181->R99999 (303-14B Electronic Engine Controls - V8 4.2L Petrol/V8 S/C 4.2L Petrol, Diagnosis and Testing),<br>Electronic Engine Controls (303-14C Electronic Engine |

GETtheMANUAL.com

| DTC | Condition | Possible Source | Action |
|---|---|---|---|
| | | | Controls - 2.7L V6 - TdV6, Diagnosis and Testing). |
| P1474 | Intercooler coolant pump malfunction | • Intercooler coolant pump circuit fault<br>• Intercooler coolant pump fault<br>• Coolant loss<br>• Cooling system fault | For intercooler pump and circuit tests,<br>REFER to: Supercharger Cooling (303-03B Supercharger Cooling, Diagnosis and Testing).<br>For other cooling system faults, refer to the symptoms in this section. |
| None | Coolant loss | • Hoses<br>• Hose connections<br>• Radiator<br>• Water pump<br>• Heater core<br>• Gaskets<br>• Engine casting cracks<br>• Engine block core plugs | Carry out a cooling system pressure test, GO to Pinpoint Test A. |
| None | Overheating | • Low/Contaminated coolant<br>• Thermostat<br>• Fan motor<br>• Fan motor fuses and/or circuits<br>• ECT sensor<br>• Restricted air flow over the radiator<br>• Engine control module (ECM)<br>• Fan speed module | Check the coolant level and condition,<br>REFER to: Cooling System Draining, Filling and Bleeding (303-03A Engine Cooling - V8 4.2L Petrol/V8 S/C 4.2L Petrol/2.5L NA V6 - AJV6/3.0L NA V6 - AJ27, General Procedures).<br>Check the thermostat operation, GO to Pinpoint Test B. Check the cooling fan operation, check for obstructions to the air flow over the radiator. |
| None | Engine not reaching normal temperature | • Thermostat<br>• Electric fan<br>• Fan speed module | Check the cooling fan operation without the air conditioning being switched on. Make sure that the cooling fan does not run before it should. Check that the thermostat closes, GO to Pinpoint Test C. |

## PINPOINT TEST A : LOSS OF COOLANT

| TEST CONDITIONS | DETAILS/RESULTS/ACTIONS |
|---|---|
| **A1: VISUAL INSPECTION** | |
| | 1 Visually inspect for loss of coolant |
| | 2 Following the instructions for your workshop's pressure tester, carry out a system pressure test. |
| | Is the engine cooling system leaking?<br>**Yes**<br>Rectify the source of the leak as indicated by the test.<br>REFER to: Engine Cooling (303-03A Engine Cooling - V8 4.2L Petrol/V8 S/C 4.2L Petrol/2.5L NA V6 - AJV6/3.0L NA V6 - AJ27, Diagnosis and Testing) /<br>Cooling System Draining, Filling and Bleeding (303-03A Engine Cooling - V8 4.2L Petrol/V8 S/C 4.2L Petrol/2.5L NA V6 - AJV6/3.0L NA V6 - AJ27, General Procedures).<br>TEST the system for normal operation.<br>**No**<br>Verify the customer complaint. |

## PINPOINT TEST B : THE ENGINE OVERHEATS

| TEST CONDITIONS | DETAILS/RESULTS/ACTIONS |
|---|---|
| **B1: CHECK THE COOLANT LEVEL AND CONDITION** | |
| | WARNING: Make sure the reservoir cap is never released until the system has cooled. Failure to follow this instruction may result in personal injury. |
| | • NOTE: To check the coolant condition, use the mandatory coolant concentration tester. |
| | 1 Check the coolant level and condition. |
| | Does the system contain sufficient coolant of the correct specification?<br>**Yes**<br>GO to B2.<br>**No**<br>Top-up the system,<br>REFER to: Cooling System Draining, Filling and Bleeding (303-03A Engine Cooling - V8 4.2L Petrol/V8 S/C 4.2L Petrol/2.5L NA V6 - AJV6/3.0L NA V6 - AJ27, General Procedures).<br>Check for coolant loss. GO to Pinpoint Test A. |
| **B2: CHECK THE OPERATION OF THE COOLING SYSTEM PRESSURE CAP** | |
| | 1 Check the opening pressure of the cooling system pressure cap. |
| | 2 Following the instructions for your workshop pressure tester, test the pressure cap to the pressure indicated. |
| | • NOTE: Make sure the pressure is built up steadily when testing the pressure cap. Rapid increases in pressure may indicate a failure in a correctly operating pressure cap.<br><br>3 Check that the pressure cap holds to the pressure indicated, and releases once that pressure is reached. |
| | Does the pressure cap operate correctly?<br>**Yes**<br>GO to B3.<br>**No**<br>INSTALL a new pressure cap. TEST the system for normal operation. |
| **B3: CHECK THE OPERATION OF THE WATER PUMP** | |
| | 1 Remove the cooling system pressure cap and make sure there is sufficient coolant in the system. |
| | 2 Make sure the parking brake is applied and **Park** or **Neutral** is selected. |
| | 3 Start the engine and hold the engine speed at 1,500 to 2,000 rpm for one minute while observing the coolant through the expansion tank filler neck. |
| | 4 Allow the engine to idle and switch off. |

GETtheMANUALS.org

| | |
|---|---|
| | Is there coolant movement in the expansion tank while the engine is running?<br>**Yes**<br>GO to B4.<br>**No**<br>Check the accessory drive belt condition and tension, REFER to: (303-05 Accessory Drive)<br>Accessory Drive - V8 4.2L Petrol/V8 S/C 4.2L Petrol/2.5L NA V6 - AJV6/3.0L NA V6 - AJ27 (Diagnosis and Testing),<br>Accessory Drive - 2.7L V6 - TdV6 (Diagnosis and Testing). |
| **B4: CHECK THAT THE THERMOSTAT OPENS** | |
| | 1 Remove and inspect the thermostat. |
| | 2 Note the opening temperature and immerse the thermostat in water. |
| | 3 Heat the water until this temperature is reached. The thermostat should begin to open. |
| | Does the thermostat open?<br>**Yes**<br>Check the cooling fans, modules, circuits, sensors, etc, REFER to:<br>Electronic Engine Controls - VIN Range: M45255->N52047 (303-14A Electronic Engine Controls - 2.5L NA V6 - AJV6/3.0L NA V6 - AJ27, Diagnosis and Testing),<br>Electronic Engine Controls - VIN Range: N80181->R99999 (303-14A Electronic Engine Controls - 2.5L NA V6 - AJV6/3.0L NA V6 - AJ27, Diagnosis and Testing),<br>Electronic Engine Controls - VIN Range: M45255->N52047 (303-14B Electronic Engine Controls - V8 4.2L Petrol/V8 S/C 4.2L Petrol, Diagnosis and Testing),<br>Electronic Engine Controls - VIN Range: N80181->R99999 (303-14B Electronic Engine Controls - V8 4.2L Petrol/V8 S/C 4.2L Petrol, Diagnosis and Testing),<br>Electronic Engine Controls (303-14C Electronic Engine Controls - 2.7L V6 - TdV6, Diagnosis and Testing).<br>**No**<br>INSTALL a new thermostat, REFER to:<br>Thermostat - 2.5L/3.0L (303-03A Engine Cooling - V8 4.2L Petrol/V8 S/C 4.2L Petrol/2.5L NA V6 - AJV6/3.0L NA V6 - AJ27, Removal and Installation),<br>Thermostat - 4.2L, Vehicles With: Supercharger (303-03A Engine Cooling - V8 4.2L Petrol/V8 S/C 4.2L Petrol/2.5L NA V6 - AJV6/3.0L NA V6 - AJ27, Removal and Installation),<br>Thermostat - 4.2L, Vehicles Without: Supercharger (303-03A Engine Cooling - V8 4.2L Petrol/V8 S/C 4.2L Petrol/2.5L NA V6 - AJV6/3.0L NA V6 - AJ27, Removal and Installation),<br>Thermostat (303-03C Engine Cooling - 2.7L V6 - TdV6, Removal and Installation).<br><br>REFER to: Cooling System Draining, Filling and Bleeding (303-03A Engine Cooling - V8 4.2L Petrol/V8 S/C 4.2L Petrol/2.5L NA V6 - AJV6/3.0L NA V6 - AJ27, General Procedures).<br>TEST the system for normal operation. |

| **PINPOINT TEST C : THE ENGINE DOES NOT REACH NORMAL OPERATING TEMPERATURE** | |
|---|---|
| **TEST CONDITIONS** | **DETAILS/RESULTS/ACTIONS** |
| **C1: CHECK THAT THE THERMOSTAT CLOSES** | |
| | 1 Remove and inspect the thermostat. |
| | 2 Allow the thermostat to cool. |
| | Does the thermostat fully close?<br>**Yes**<br>Check the cooling fans, modules, circuits, sensors, etc, REFER to:<br>Electronic Engine Controls - VIN Range: M45255->N52047 (303-14A Electronic Engine Controls - 2.5L NA V6 - AJV6/3.0L NA V6 - AJ27, Diagnosis and Testing),<br>Electronic Engine Controls - VIN Range: N80181->R99999 (303-14A Electronic Engine Controls - 2.5L NA V6 - AJV6/3.0L NA V6 - AJ27, Diagnosis and Testing),<br>Electronic Engine Controls - VIN Range: M45255->N52047 (303-14B Electronic Engine Controls - V8 4.2L Petrol/V8 S/C 4.2L Petrol, Diagnosis and Testing),<br>Electronic Engine Controls - VIN Range: N80181->R99999 (303-14B Electronic Engine Controls - V8 4.2L Petrol/V8 S/C 4.2L Petrol, Diagnosis and Testing),<br>Electronic Engine Controls (303-14C Electronic Engine Controls - 2.7L V6 - TdV6, Diagnosis and Testing).<br>**No**<br>INSTALL a new thermostat, REFER to:<br>Thermostat - 2.5L/3.0L (303-03A Engine Cooling - V8 4.2L Petrol/V8 S/C 4.2L Petrol/2.5L NA V6 - AJV6/3.0L NA V6 - AJ27, Removal and Installation),<br>Thermostat - 4.2L, Vehicles With: Supercharger (303-03A Engine Cooling - V8 4.2L Petrol/V8 S/C 4.2L Petrol/2.5L NA V6 - AJV6/3.0L NA V6 - AJ27, Removal and Installation),<br>Thermostat - 4.2L, Vehicles Without: Supercharger (303-03A Engine Cooling - V8 4.2L Petrol/V8 S/C 4.2L Petrol/2.5L NA V6 - AJV6/3.0L NA V6 - AJ27, Removal and Installation),<br>Thermostat (303-03C Engine Cooling - 2.7L V6 - TdV6, Removal and Installation).<br><br>REFER to: Cooling System Draining, Filling and Bleeding (303-03A Engine Cooling - V8 4.2L Petrol/V8 S/C 4.2L Petrol/2.5L NA V6 - AJV6/3.0L NA V6 - AJ27, General Procedures).<br>TEST the system for normal operation. |

GETtheMANUALS.org

# Engine Cooling - 2.7L V6 - TdV6 - Cooling System Draining, Filling and Bleeding

General Procedures

**1.** WARNINGS:

To avoid having scalding hot coolant or steam blow out of the cooling system, use extreme care when removing the coolant pressure cap from a hot cooling system. Wait until the engine has cooled, then wrap a thick cloth around the coolant pressure cap and turn it slowly until the pressure begins to release. Step back while the pressure is released from the system. When certain all the pressure has been released (still with a cloth) turn and remove the coolant pressure cap from the coolant expansion tank. Failure to follow these instructions may result in personal injury.

Relieve the cooling system pressure by unscrewing the coolant pressure cap. Failure to follow these instructions may result in personal injury.

CAUTION: The engine cooling system must be maintained with the correct concentration and type of anti-freeze solution to prevent corrosion and frost damage. Failure to follow this instruction may result in damage to the vehicle.

Remove the coolant expansion tank pressure cap.

**2.** Remove the radiator splash shield.
For additional information, refer to: Radiator Splash Shield (501-02 Front End Body Panels, Removal and Installation).

**3.** NOTE: Remove and discard the radiator drain plug O-ring seal.

Remove the coolant drain plug.

- Drain the coolant into a suitable container.

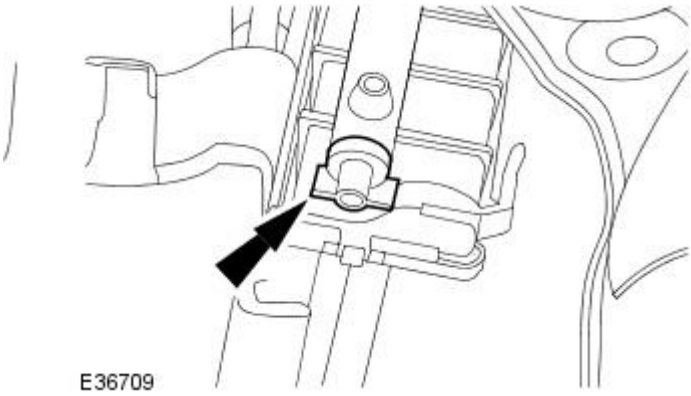


**4.** Allow the coolant to drain.

**5.** NOTE: Install a new O-ring seal.

• NOTE: Do not over tighten the drain plug. Failure to follow this instruction may result in damage to the vehicle.

Install the coolant drain plug.

- Remove the drain tray.

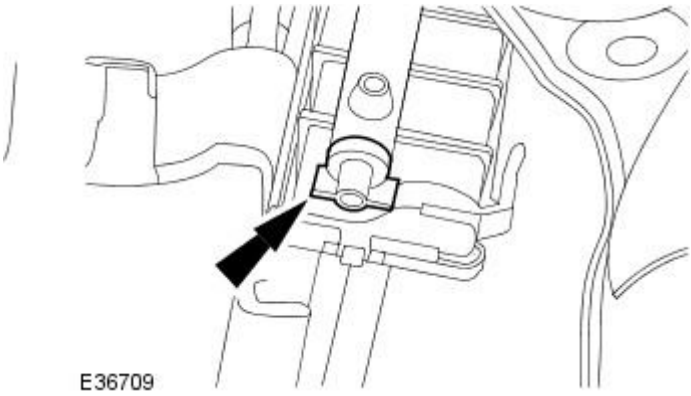


**6.** Lower the vehicle.

**7.** Remove the coolant expansion tank bleed screw.

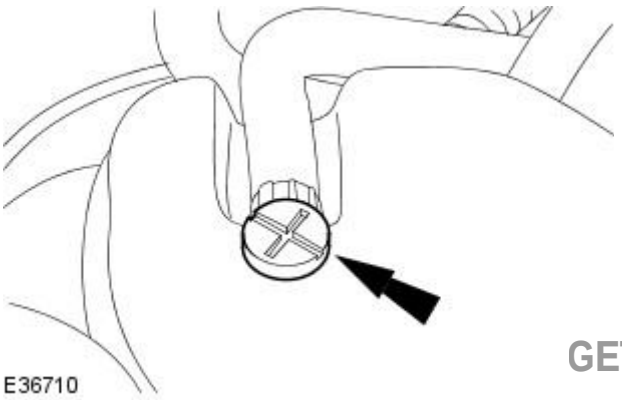


GETtheMANUALS.org

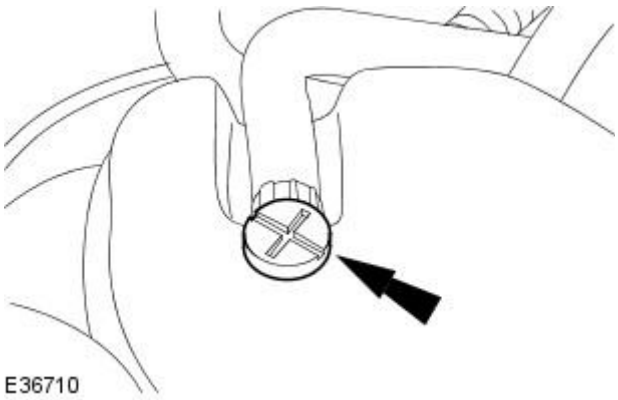


8. Fill the cooling system up to the MAX mark on the coolant expansion tank using a fifty percent mixture of Jaguar Premium Cooling System Fluid or equivalent, meeting Jaguar specification WSS M97B44-D and fifty percent water.

9. CAUTION: Do not over tighten the coolant expansion tank bleed screw. Failure to follow this instruction may result in damage to the vehicle.

   Install the coolant expansion tank bleed screw.

   - Tighten to 3 Nm.

10. Set the heating system to the COLD position.
11. Using an assistant, turn the ignition key to the ON position.
12. NOTE: Do not allow the expansion tank to empty when the electric coolant pump starts.

    Fill the cooling system up to the MAX mark on the coolant expansion tank using a fifty percent mixture of Jaguar Premium Cooling System Fluid or equivalent, meeting Jaguar specification WSS M97B44-D and fifty percent water.

13. After 3 minutes, set the heating system to the HOT position.
14. Maintain the coolant level in the coolant expansion tank at the MAX mark using a fifty percent mixture of Jaguar Premium Cooling System Fluid or equivalent, meeting Jaguar specification WSS M97B44-D and fifty percent water.
15. After four minutes, refit the coolant expansion tank pressure cap.
16. Start the engine and allow to idle for five minutes.
17. Raise the engine to 2500 RPM for 30 seconds.
18. Turn the ignition key to the OFF position.
19. Allow the engine to cool.
20. WARNING: To avoid having scalding hot coolant or steam blow out of the cooling system, use extreme care when removing the coolant pressure cap from a hot cooling system. Wait until the engine has cooled, then wrap a thick cloth around the coolant pressure cap and turn it slowly until the pressure begins to release. Step back while the pressure is released from the system. When certain all the pressure has been released (still with a cloth) turn and remove the coolant pressure cap from the coolant expansion tank. Failure to follow these instructions may result in personal injury.

    After two minutes, release the cooling system pressure.

    - Remove the coolant expansion tank pressure cap.

21. NOTE: Make sure the heating system is set to the HOT position.

    Turn the ignition key to the ON position.

22. Maintain the coolant level in the coolant expansion tank using a fifty percent mixture of Jaguar Premium Cooling System Fluid or equivalent, meeting Jaguar specification WSS M97B44-D and fifty percent water.
23. After three minutes, refit the coolant expansion tank pressure cap.
24. Drive the vehicle on the road at varying speeds until the engine reaches normal operating temperature.
25. Allow the engine to cool.
26. WARNING: To avoid having scalding hot coolant or steam blow out of the cooling system, use extreme care when removing the coolant pressure cap from a hot cooling system. Wait until the engine has cooled, then wrap a thick cloth around the coolant pressure cap and turn it slowly until the pressure begins to release. Step back while the pressure is released from the system. When certain all the pressure has been released (still with a cloth) turn and remove the coolant pressure cap from the coolant expansion tank. Failure to follow these instructions may result in personal injury.

    Release the cooling system pressure.

    - Remove the coolant expansion tank pressure cap.

GETtheMANUALS.org

27. Fill the cooling system up to the MAX mark on the coolant at the MAX mark expansion tank using a fifty percent mixture of Jaguar Premium

Cooling System Fluid or equivalent, meeting Jaguar specification WSS M97B44-D and fifty percent water.

**28.** Raise the vehicle.

**29.** Check for water leaks.

**30.** Install the radiator splash shield.
For additional information, refer to: Radiator Splash Shield (501-02 Front End Body Panels, Removal and Installation).

GETtheMANUALS.org

# Engine Cooling - 2.7L V6 - TdV6 - Coolant Expansion Tank

Removal and Installation

## Removal

Vehicles without supercharger

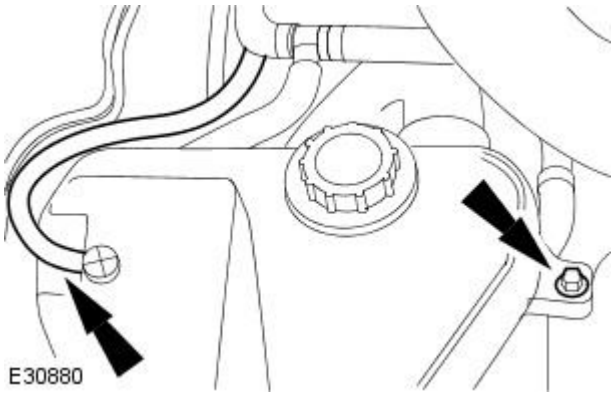


**1.** NOTE: Cap the vent hose to minimize coolant loss.

Detach the coolant expansion tank.

- Detach the vent hose.
- Remove the coolant expansion tank retaining bolt.

Vehicles with supercharger

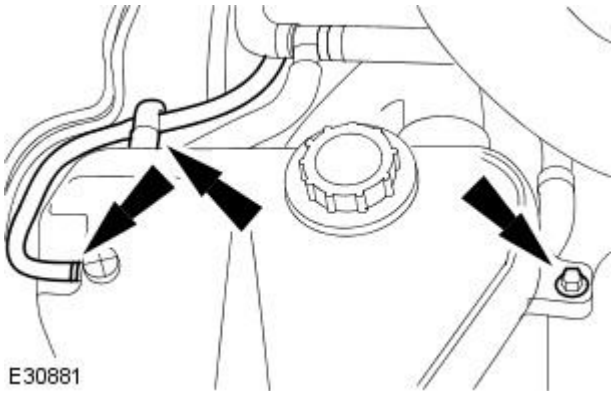


**2.** NOTE: Cap the vent hoses to minimize coolant loss.

Detach the coolant expansion tank.

- Detach the vent hoses.
- Remove the coolant expansion tank retaining bolt.

All vehicles

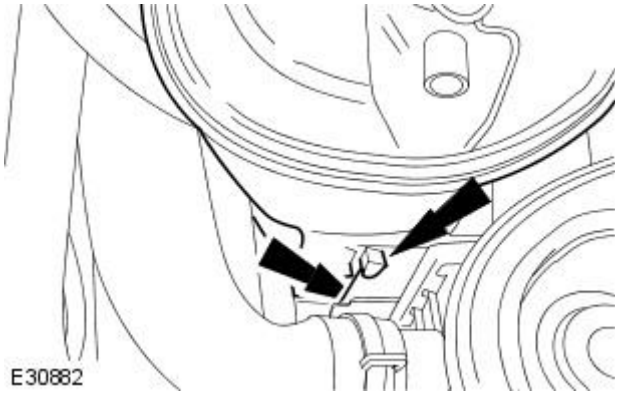


**3.** Detach the coolant expansion tank.

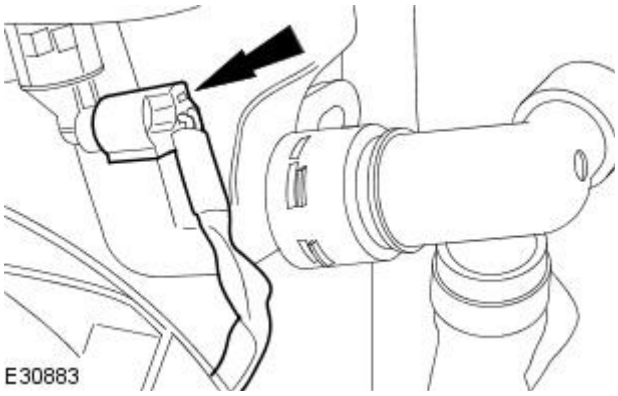


**4.** Disconnect the coolant expansion tank low level sensor.

GETtheMANUALS.org

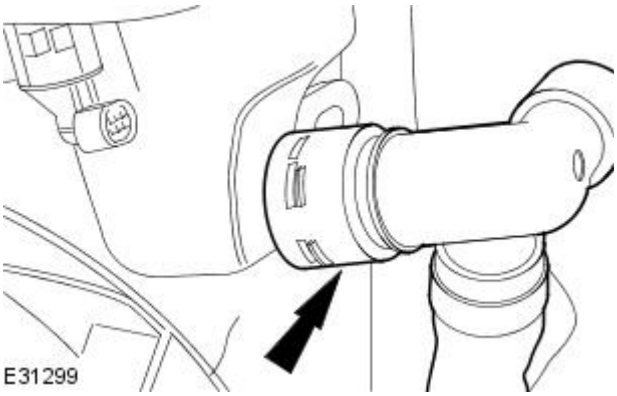


**5.** NOTE: Make sure the retaining clip is not removed.

• NOTE: Cap the coolant expansion tank lower hose to minimize coolant loss.

Detach the coolant expansion tank lower hose.

- Remove the coolant expansion tank.

## Installation

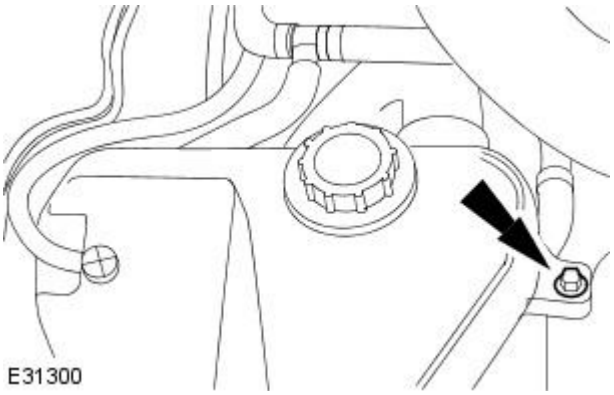


**1.** To install, reverse the removal procedure.

- Tighten to 3 Nm.

**2.** Check and top up the cooling system as required.

GETtheMANUALS.org

# Engine Cooling - 2.7L V6 - TdV6 - Cooling Fan Motor and Shroud

Removal and Installation

## Removal

1. Remove fuse 38 from the front power distribution box prior to performing any under hood service in the area of the cooling fan.
2. Remove the radiator splash shield.
   For additional information, refer to: Radiator Splash Shield (501-02 Front End Body Panels, Removal and Installation).
3. Disconnect the cooling fan motor and shroud electrical connectors.

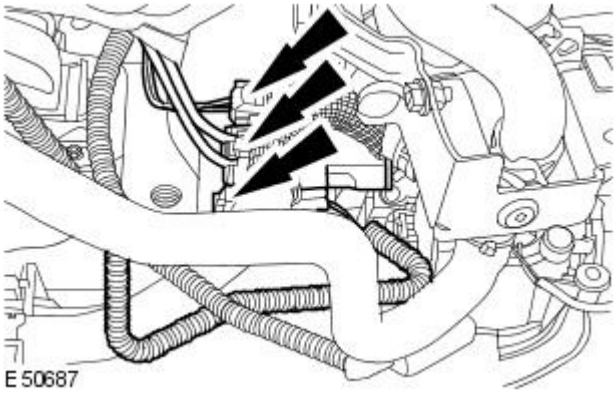


4. Detach the heater return pipe.

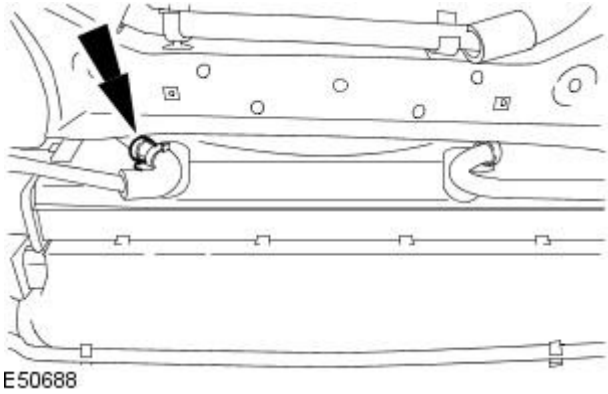


5. Detach the air conditioning return pipe.

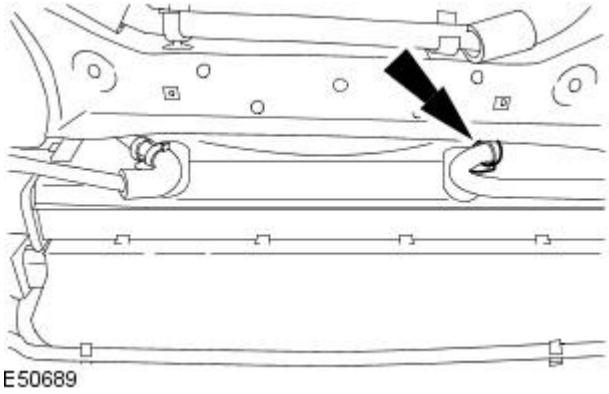


6. Disconnect the auxillary coolant flow pump electrical connector.

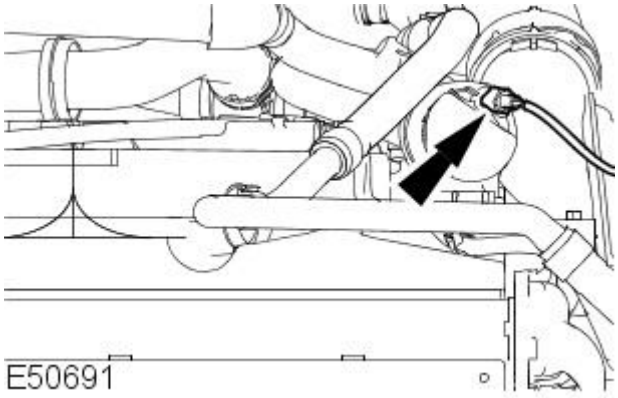


7. Lower the vehicle.
8. Remove the air cleaner.
   For additional information, refer to: Air Cleaner (303-12C Intake Air

GETtheMANUALS.org

Distribution and Filtering - 2.7L V6 - TdV6, Removal and Installation).

**9.** Remove the coolant expansion tank.
For additional information, refer to: Coolant Expansion Tank (303-03C Engine Cooling - 2.7L Diesel, Removal and Installation).

**10.** Detach the auxillary coolant flow pump.

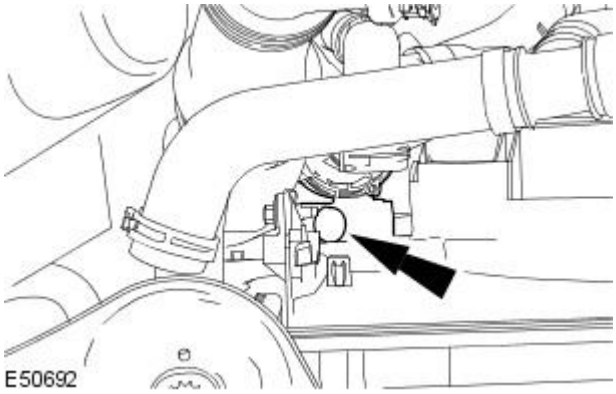
E50692

**11.** Remove the cooling fan motor and shroud retaining bracket.

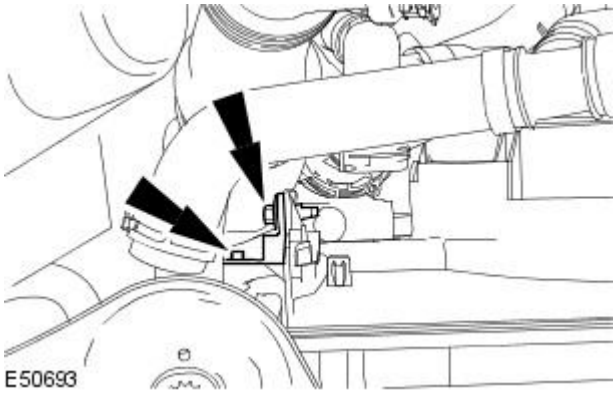
E50693

**12.** Remove the cooling fan motor and shroud retaining bolt.

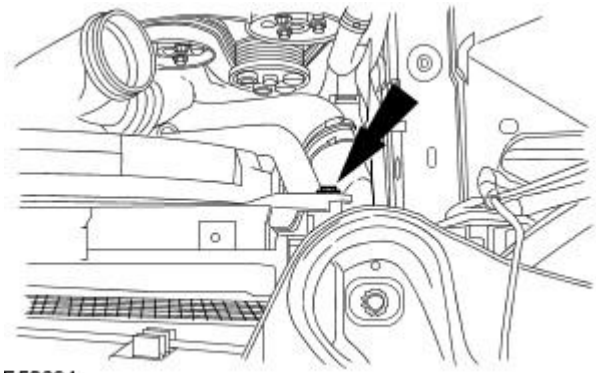
E50694

**13.** Remove the cooling fan motor and shroud.

- Reposition the cooling fan motor and shroud wiring harness.

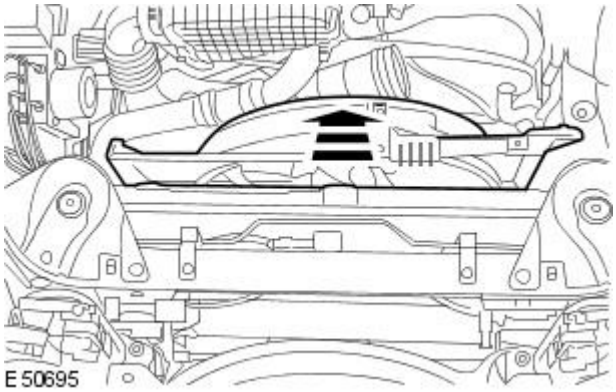
E50695

## Installation

**1.** To install, reverse the removal procedure.

GETtheMANUALS.org

# Engine Cooling - 2.7L V6 - TdV6 - Radiator

Removal and Installation

## Removal

1. Drain the cooling system.
   For additional information, refer to: Cooling System Draining, Filling and Bleeding (303-03C Engine Cooling - 2.7L Diesel, General Procedures).
2. Remove the air deflector.
   For additional information, refer to: Air Deflector (501-02 Front End Body Panels, Removal and Installation).
3. Remove the cooling fan motor and shroud.
   For additional information, refer to: Cooling Fan Motor and Shroud (303-03C Engine Cooling - 2.7L Diesel, Removal and Installation).
4. Disconnect the radiator top hose.

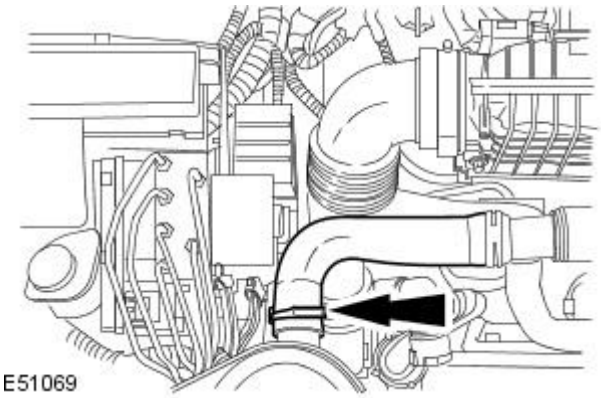
E51069

5. Remove the air intake elbow pipe.

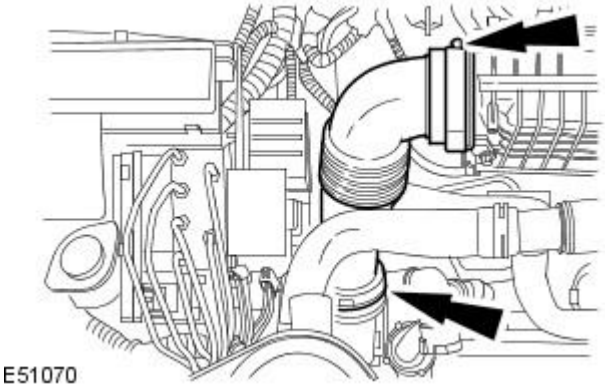
E51070

6. Detach the power steering cooler hose.

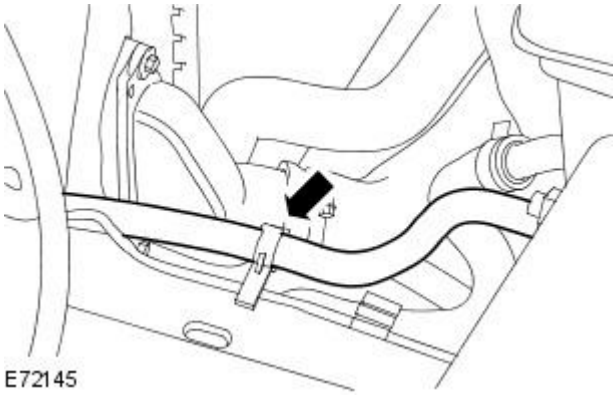
E72145

7. Detach the charge air cooler intake elbow.

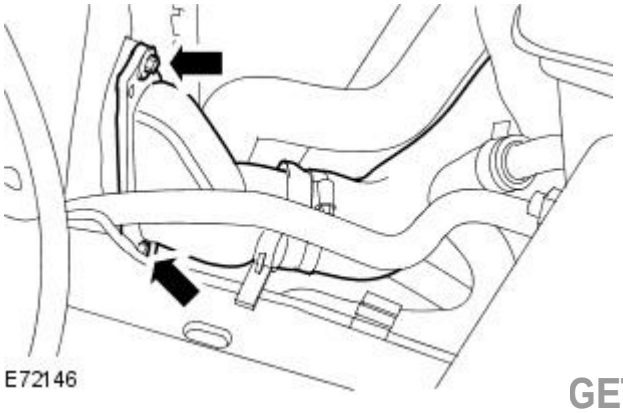
E72146

GETtheMANUALS.org

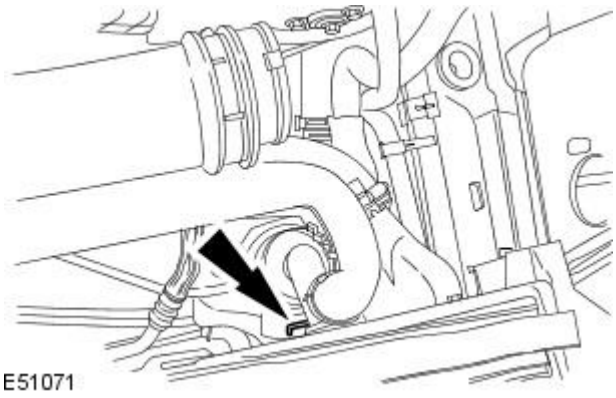


**8.** Detach the thermostat.

- Release the retaining clip.

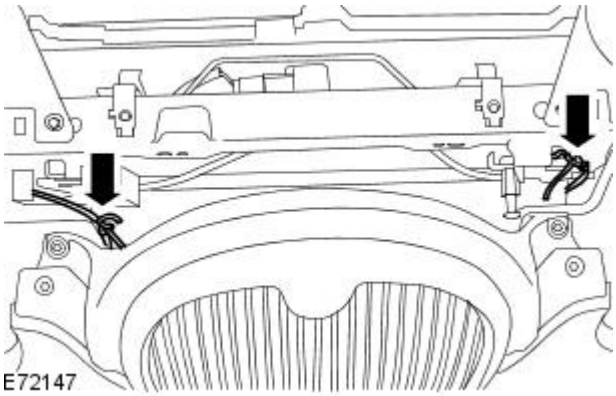


**9.** Using suitable tie straps, support the air conditioning (A/C) condensor.

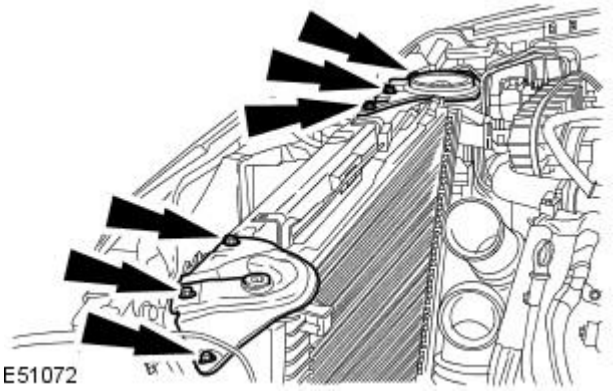


**10.** Remove the radiator mounting brackets.

**11.** Raise the vehicle.
For additional information, refer to: Lifting (100-02, Description and Operation).

**12.** Detach the coolant pipe.

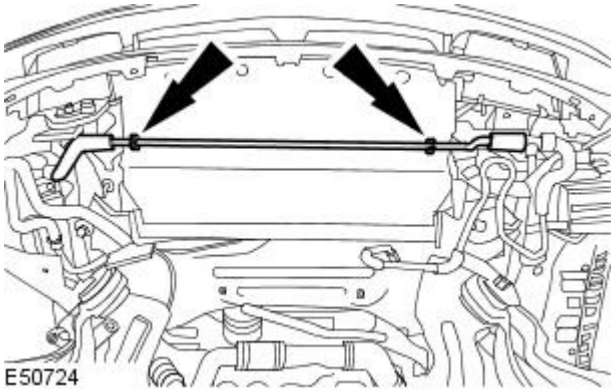


GETtheMANUALS.org

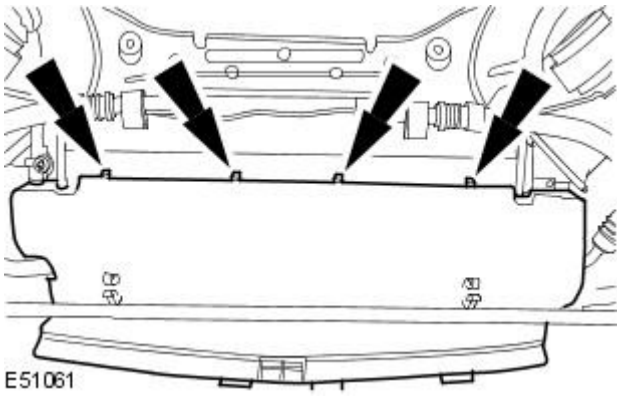


**13.** Remove the radiator lower cowl.

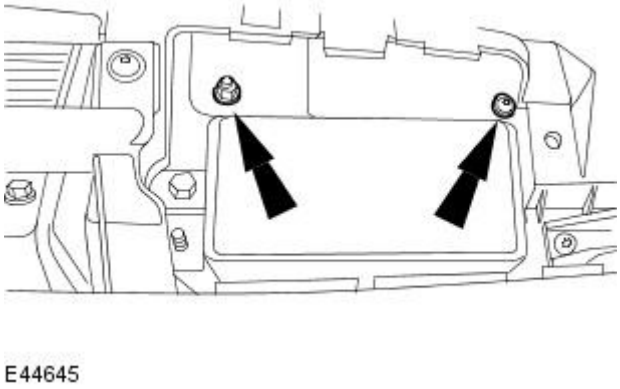


**14.** NOTE: Support the speed control module using tie straps.

Detach the speed control module.

- Remove the retaining nuts.

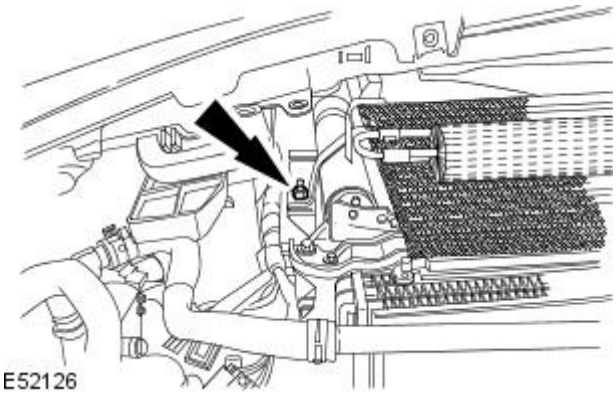


**15.** Remove the right-hand power steering cooler retaining nut.

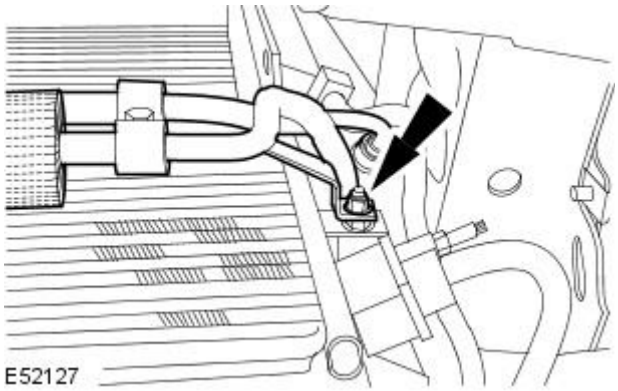


**16.** NOTE: Support the power steering cooler using tie straps.

Detach the power steering cooler.

- Remove the retaining nut.

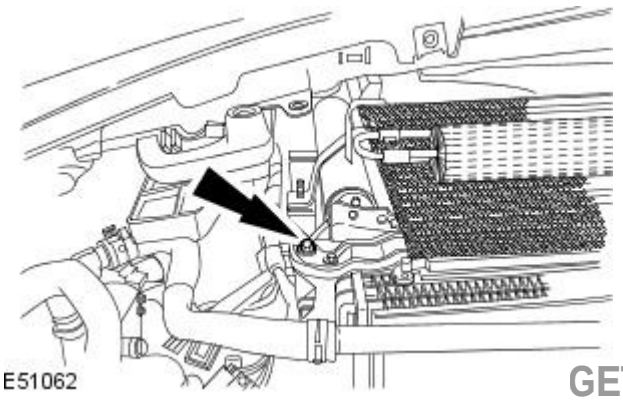


**17.** Remove the right-hand A/C condensor retaining bolt.

GETtheMANUALS.org

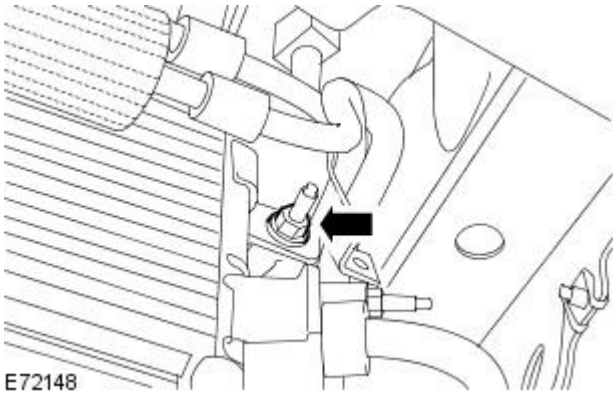


**18.** Remove the left-hand A/C condensor retaining stud.

**19.** Lower the vehicle.

**20.** Reposition the radiator rearwards.

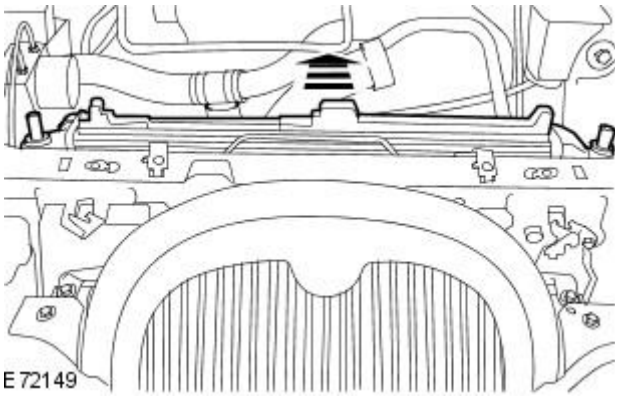


**21.** Reposition the radiator to the left.

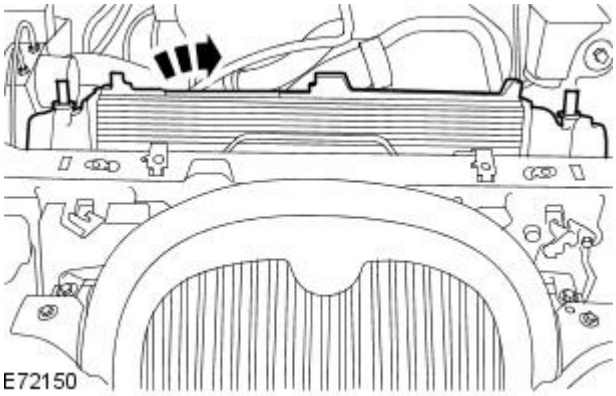


**22.** Remove the radiator assembly.

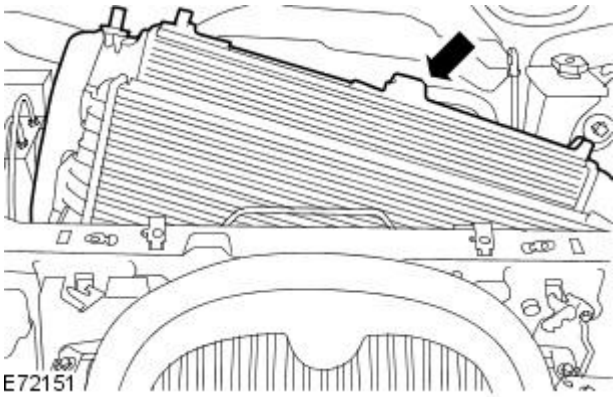


**23.** Detach the foam insulation pads.

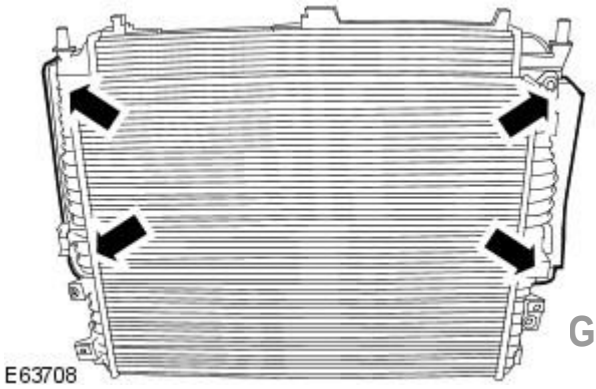


GETtheMANUALS.org

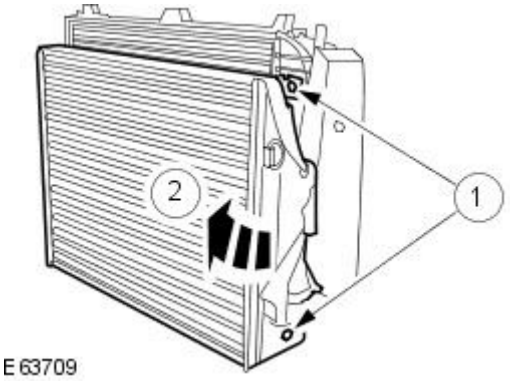


**24.** Remove the charge air cooler from the radiator.

1. Remove the charge air cooler retaining bolts.
2. Remove the charge air cooler from the radiator.

## Installation

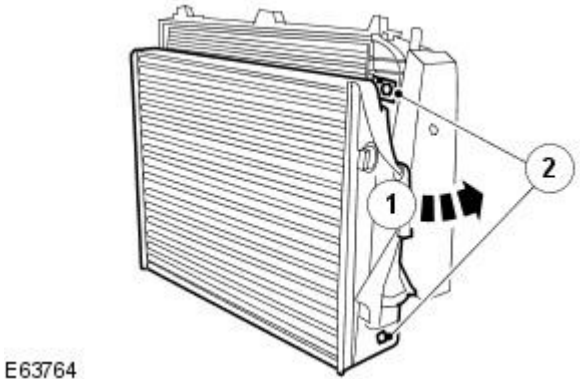


**1.** Install the radiator assembly.

1. Install the charge air cooler to the radiator.
2. Install the charge air cooler retaining bolts.

- Tighten to 7 Nm.

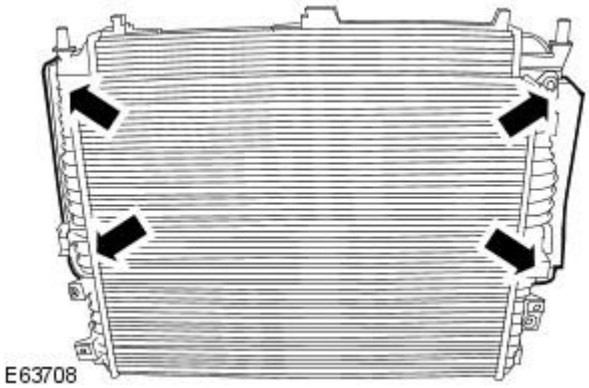


**2.** Fit the foam insulation pads.

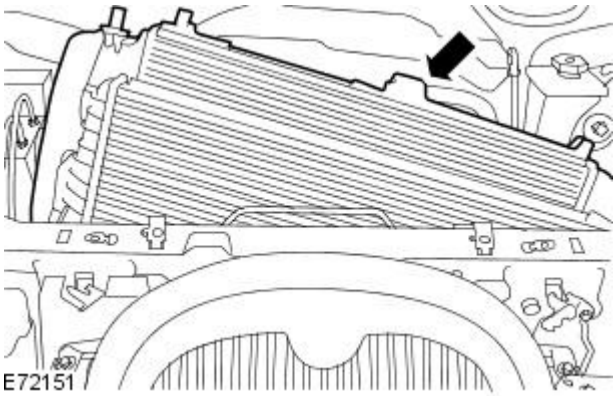


**3.** Install the radiator assembly.

**4.** Raise the vehicle.
For additional information, refer to: Lifting (100-02, Description and Operation).

GETtheMANUALS.org

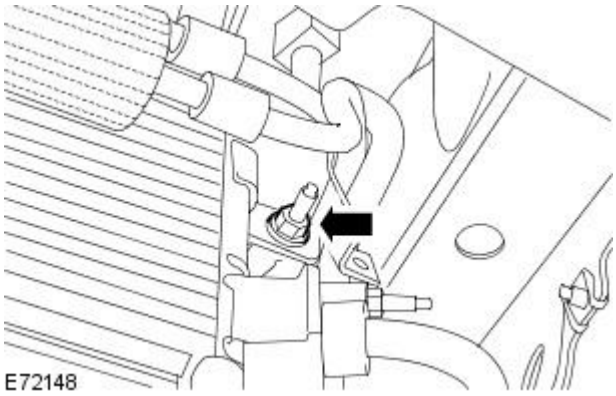


**5.** Install the left-hand A/C condensor retaining stud.

- Tighten to 7 Nm.

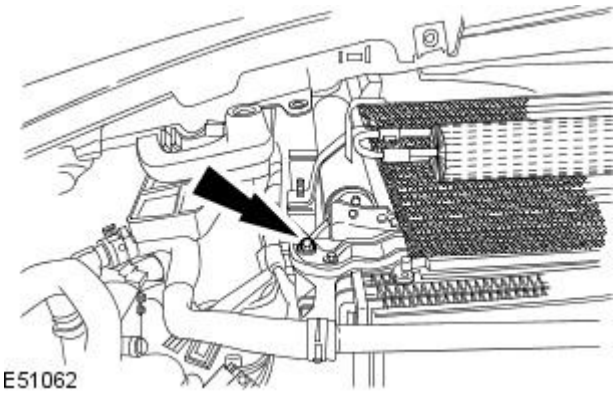


**6.** Install the right-hand A/C condensor retaining bolt.

- Tighten to 7 Nm.

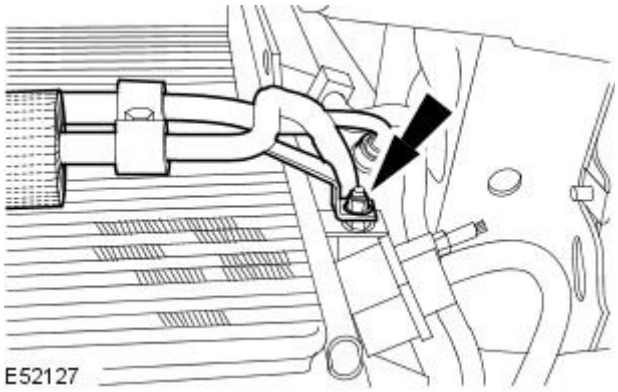


**7.** Attach the power steering cooler.

- Install the retaining nut.
- Tighten to 7 Nm.

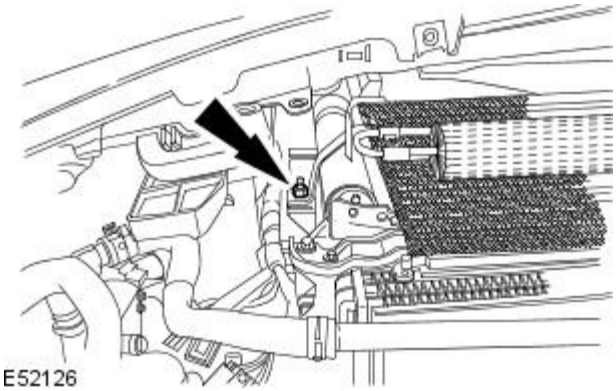


**8.** Install the power steering cooler retaining nut.

- Tighten to 7 Nm.

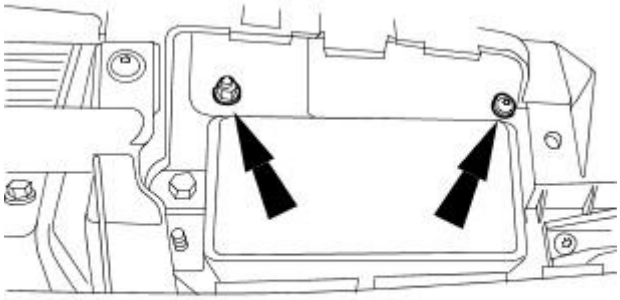


**9.** Attach the speed control module.

- Install the retaining nuts.
- Tighten to 7 Nm.

GETtheMANUALS.org

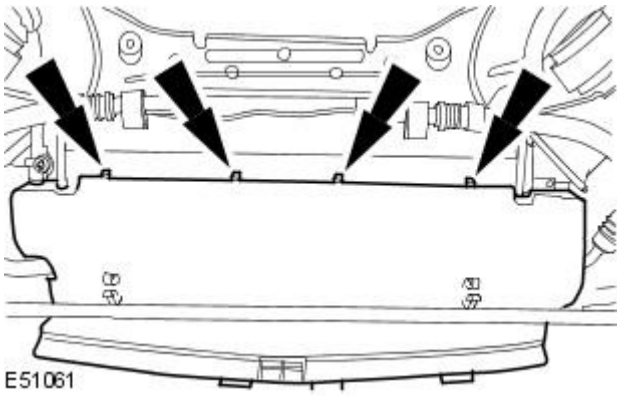


**10.** Install the radiator lower cowl.

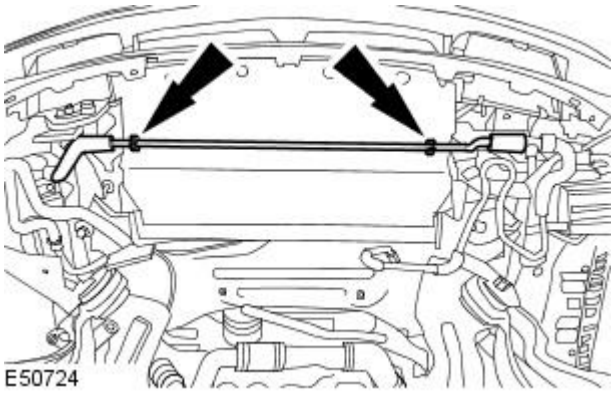


**11.** Attach the coolant pipe.

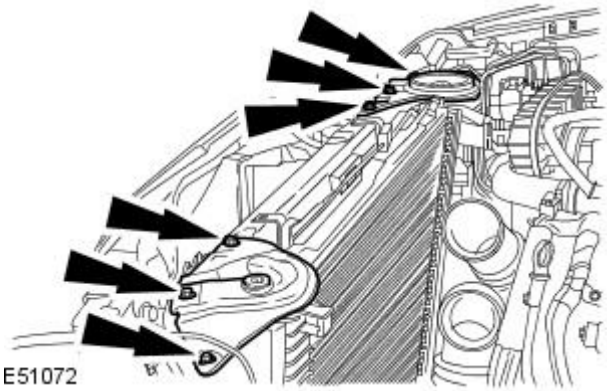


**12.** Lower the vehicle.

**13.** Install the radiator mounting brackets.

- Tighten to 7 Nm.

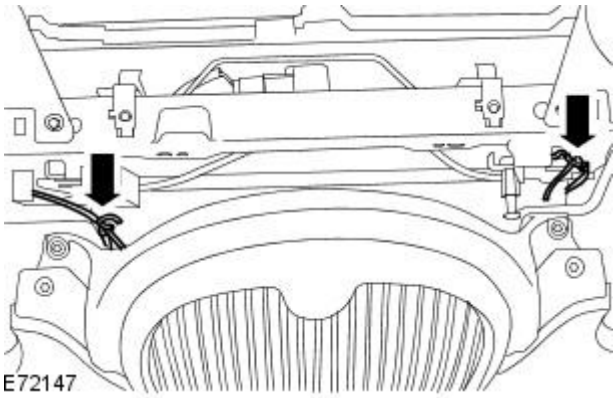


**14.** Remove the tie straps supporting the A/C condensor.

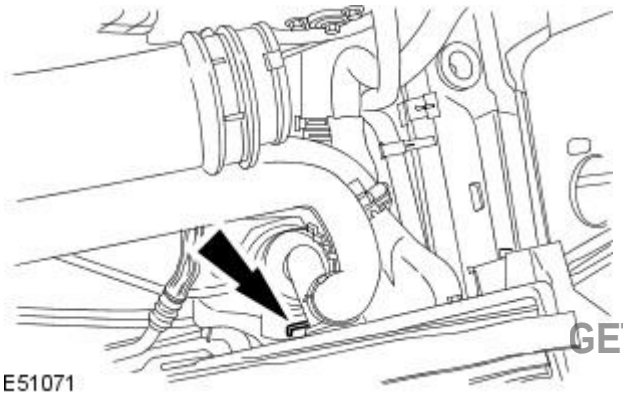


**15.** NOTE: Make sure the retaining clip is fully installed.

Attach the thermostat.

GETtheMANUALS.org

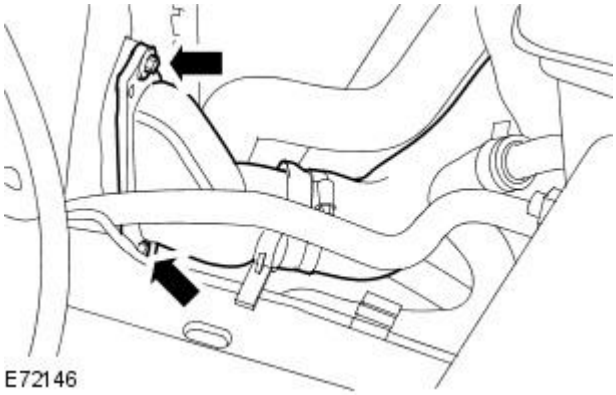


**16.** Attach the charge air cooler intake elbow.

- Tighten to 7 Nm.

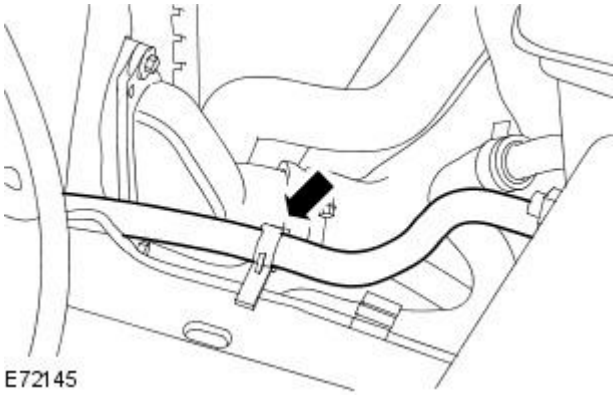


**17.** Attach the power steering cooler hose.

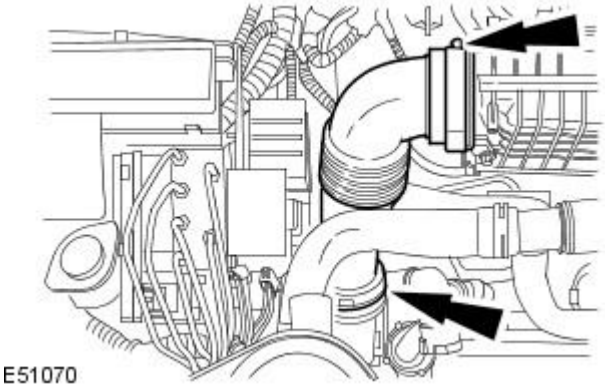


**18.** Install the air intake elbow pipe.

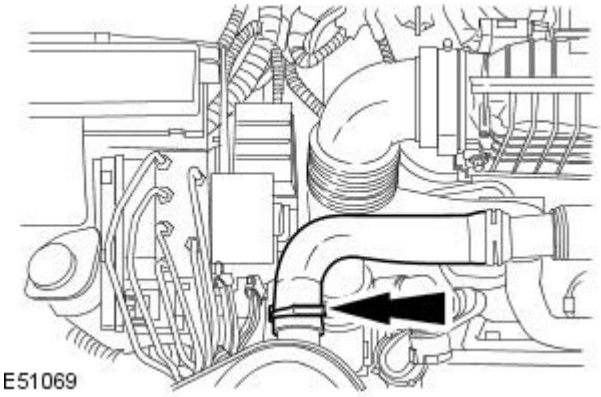


**19.** Connect the radiator top hose.

**20.** Install the cooling fan motor and shroud.
For additional information, refer to: Cooling Fan Motor and Shroud (303-03C Engine Cooling - 2.7L Diesel, Removal and Installation).

**21.** Install the air deflector.
For additional information, refer to: Air Deflector (501-02 Front End Body Panels, Removal and Installation).

**22.** Fill and bleed cooling system.
For additional information, refer to: Cooling System Draining, Filling and Bleeding (303-03C Engine Cooling - 2.7L Diesel, General Procedures).

GETtheMANUALS.org

# Engine Cooling - 2.7L V6 - TdV6 - Thermostat

Removal and Installation

| Special Tool(s) | |
|---|---|
| 24003 | Remover/Install, Cooling Hose Clamp<br><br>303-397 |

## Removal

All vehicles

1. Drain the cooling system.
   For additional information, refer to: Cooling System Draining, Filling and Bleeding (303-03A Engine Cooling - V8 4.2L Petrol/V8 S/C 4.2L Petrol/2.5L NA V6 - AJV6/3.0L NA V6 - AJ27, General Procedures).
2. Lower the vehicle.
3. Remove the air cleaner.
   For additional information, refer to: Air Cleaner (303-12C Intake Air Distribution and Filtering - 2.7L V6 - TdV6, Removal and Installation).
4. Detach the charge air cooler inlet hose.

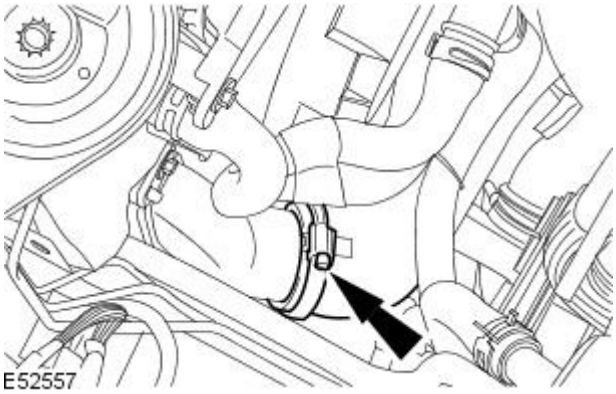
E52557

5. Remove the charge air cooler inlet elbow.

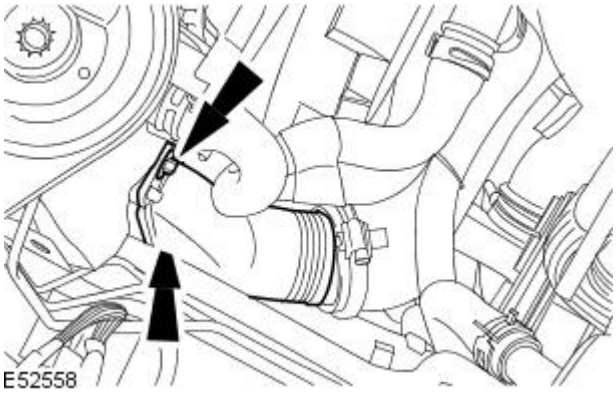
E52558

Vehicles with automatic transmission

6. Detach the coolant hoses.

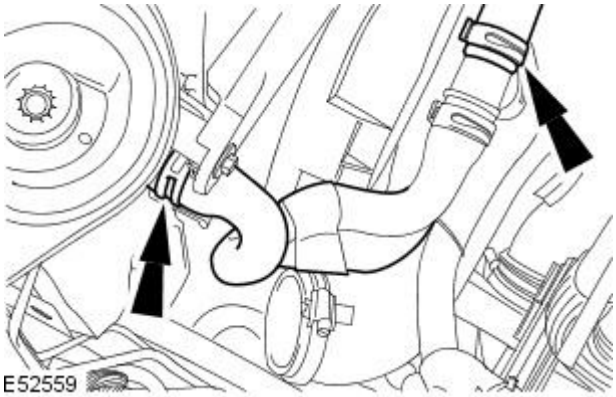
E52559

GETtheMANUALS.org

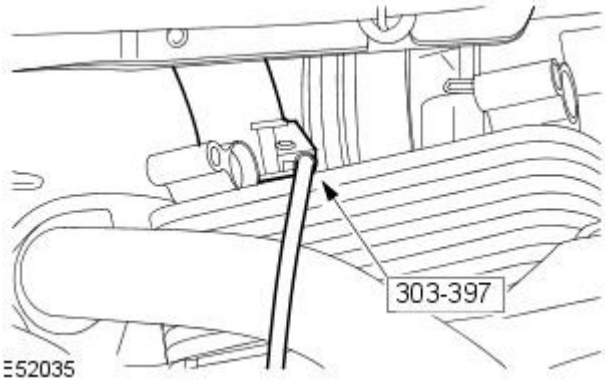


**7.** Using the special tool, detach the transmission cooler hose.

All vehicles

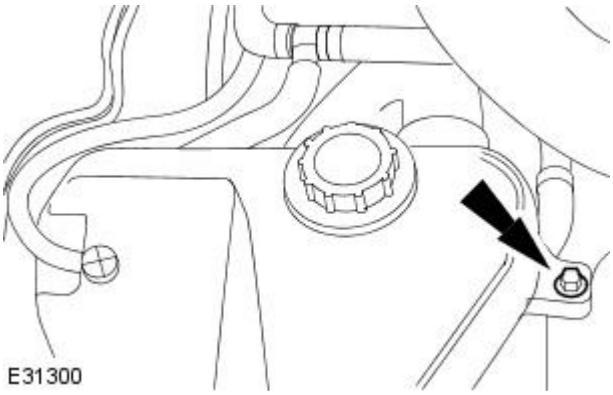


**8.** Reposition the coolant expansion tank.

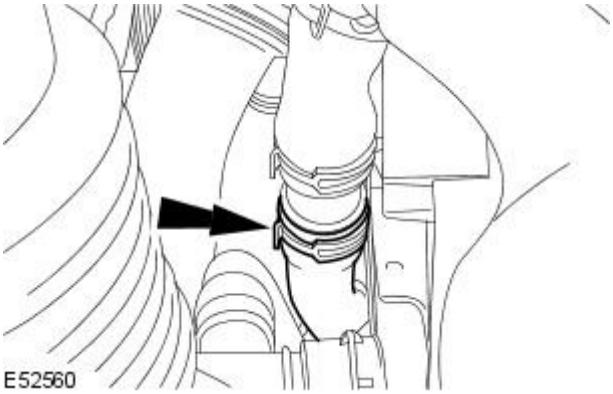


**9.** Detach the coolant hose.

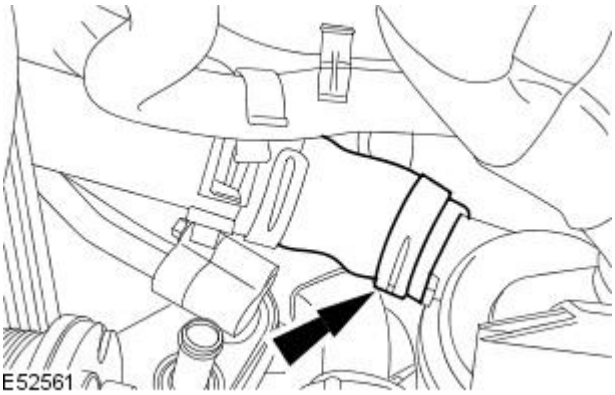


**10.** Reposition the coolant hose spring clip.

GETtheMANUALS.org

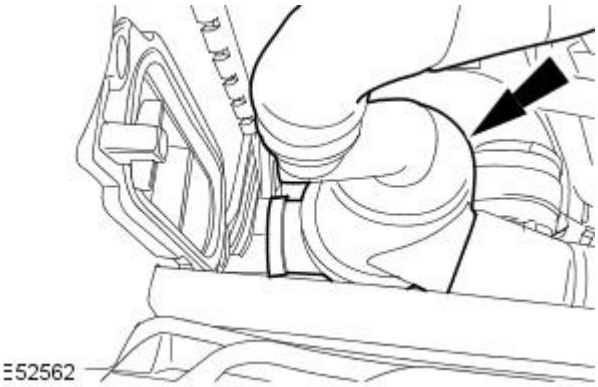


11. Remove the thermostat and hose assembly.

## Installation

1. To install, reverse the removal procedure.
2. Fill the cooling system.
   For additional information, refer to: Cooling System Draining, Filling and Bleeding (303-03A Engine Cooling - V8 4.2L Petrol/V8 S/C 4.2L Petrol/2.5L NA V6 - AJV6/3.0L NA V6 - AJ27, General Procedures).

GETtheMANUALS.org

# Engine Cooling - 2.7L V6 - TdV6 - Water Pump

Removal and Installation

| Special Tool(s) | |
|---|---|
| 303-703 | Accessory belt detensioner.<br><br>303-703 |

## Removal

1. Remove fuse 38 from the front power distribution box prior to performing any under hood service in the area of the cooling fan.
2. Remove the air cleaner.
   For additional information, refer to: Air Cleaner (303-12C Intake Air Distribution and Filtering - 2.7L V6 - TdV6, Removal and Installation).
3. Drain the cooling system.
   For additional information, refer to: Cooling System Draining, Filling and Bleeding (303-03C Engine Cooling - 2.7L V6 - TdV6, General Procedures).
4. Remove the air deflector.
   For additional information, refer to: Air Deflector (501-02 Front End Body Panels, Removal and Installation).
5. Detach the accessory drive belt.
   1. Using the special tool, rotate the belt tensioner counter clockwise.
   2. Detach the accessory drive belt.

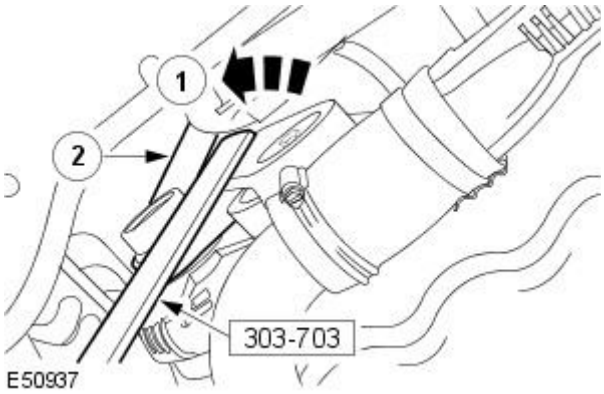


6. Remove the water pump pulley.
   - Using a suitable 6mm bar , retain the water pump pulley.
   - Discard the water pump pulley retaining bolts.

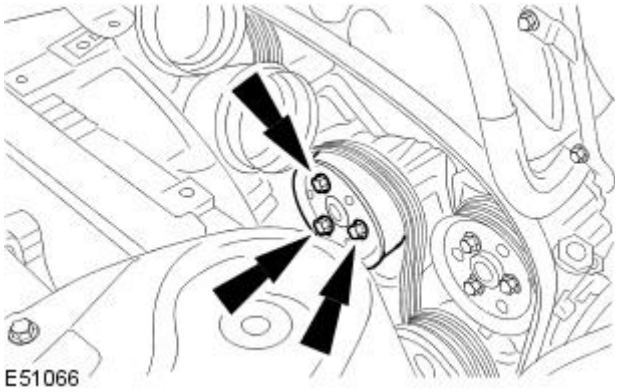


7. CAUTION: Reposition the accessory drive belt to prevent contamination from the coolant.

   Reposition the accessory drive belt.

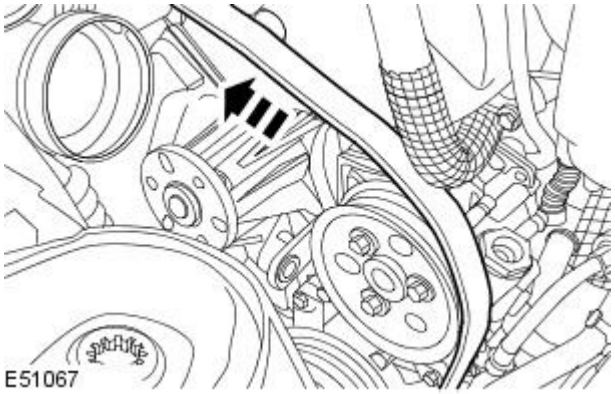


GETtheMANUALS.org

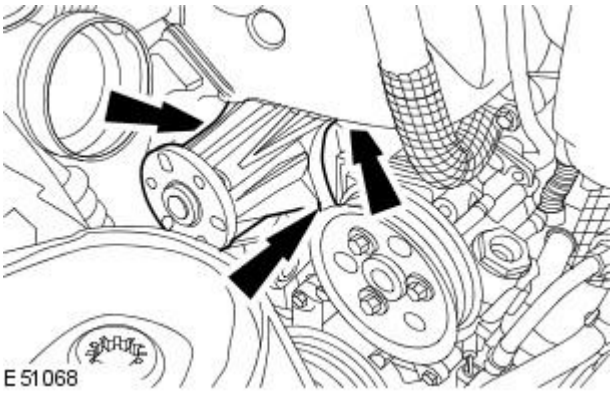


**8.** NOTE: Discard the water pump O-ring seal.

Remove the water pump.

## Installation

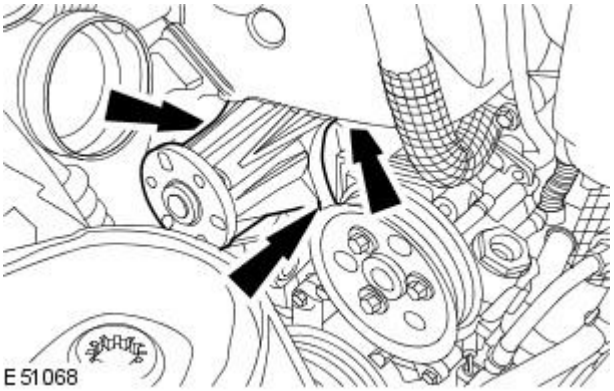


**1.** NOTE: Install a new O-ring seal.

Install the water pump.

- Tighten to 10Nm.

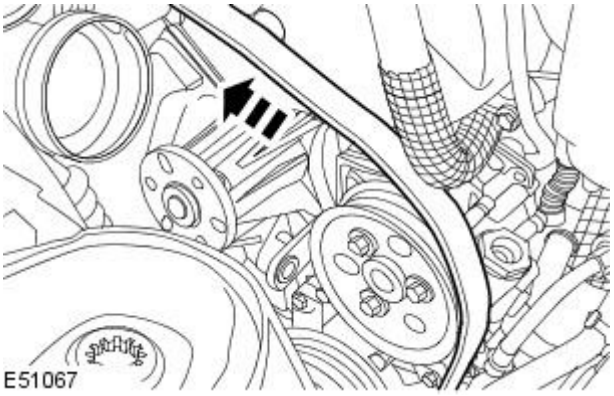


**2.** Align the accessory drive belt.

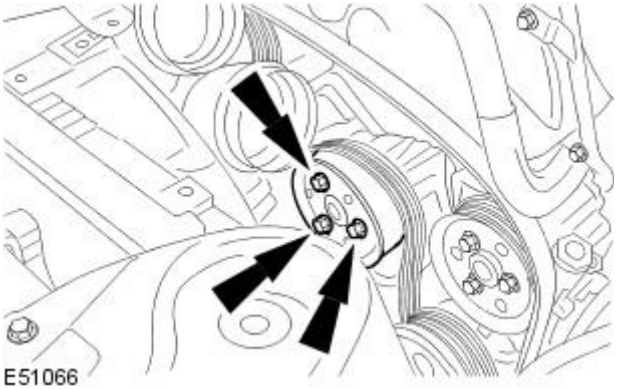


**3.** Install the water pump pulley.

- Using a suitable 6mm bar , retain the water pump pulley.
- Tighten to 24 Nm.
- Align the accessory drive belt.

GETtheMANUALS.org

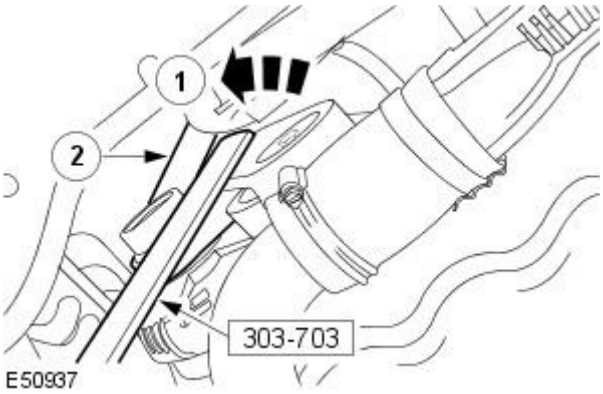


**4.** Attach the accessory drive belt.

1. Using the special tool, rotate the belt tensioner counter clockwise.
2. Attach the accessory drive belt.

**5.** Fill the cooling system.
For additional information, refer to: Cooling System Draining, Filling and Bleeding (303-03C Engine Cooling - 2.7L V6 - TdV6, General Procedures).

**6.** Install the air deflector.
For additional information, refer to: Air Deflector (501-02 Front End Body Panels, Removal and Installation).

**7.** Install the air cleaner.
For additional information, refer to: Air Cleaner (303-12C Intake Air Distribution and Filtering - 2.7L V6 - TdV6, Removal and Installation).

**8.** Install fuse 38 to the front power distribution box.

GETtheMANUALS.org

# Fuel Charging and Controls - 2.5L NA V6 - AJV6 / 3.0L NA V6 - AJ27 -

**Torque Specifications**

| Description | Nm | lb-ft | lb-in |
|---|---|---|---|
| Lower intake manifold retaining bolts | 10 | - | 89 |
| Fuel injection supply manifold retaining bolts | 10 | - | 89 |
| Fuel pressure regulator | 10 | - | 89 |
| Throttle body | 10 | - | 89 |

GETtheMANUALS.org

# Fuel Charging and Controls - 2.5L NA V6 - AJV6 / 3.0L NA V6 - AJ27 - Fuel Charging and Controls

Description and Operation

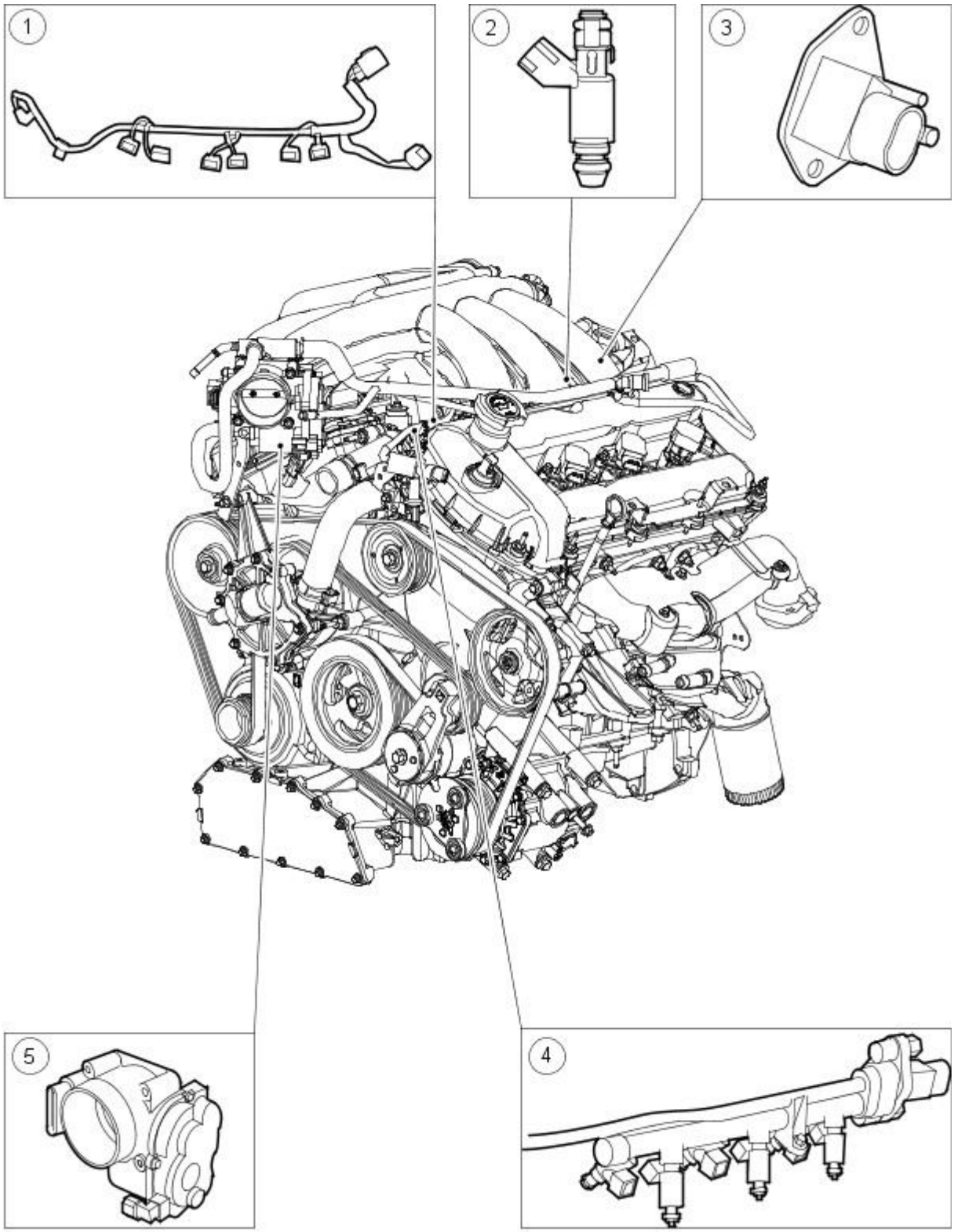


E31242

| Item | Part Number | Description |
|---|---|---|
| 1 | — | Fuel charging wiring harness |
| 2 | — | Fuel injector |
| 3 | — | Fuel pressure regulator |
| 4 | — | Fuel injection supply manifold |
| 5 | — | Throttle body |

The electronic returnless fuel system has the advantages of reduced fuel temperature and fuel tank vapor caused by constant fuel recirculation. The system delivers the correct amount of fuel to the engine under all conditions and at a constant pressure differential with respect to manifold absolute pressure.

Fuel is supplied at high pressure to the fuel injectors via a fuel injection supply manifold which incorporates fuel injectors, a fuel pressure regulator and a fuel temperature sensor. The engine control module (ECM) increases the fuel pressure to minimise fuel vapor formation to maintain fuel flow across the injectors.

The throttle body assembly is calibrated during assembly, no adjustments are required or permitted. The throttle motor is a 12 volt DC motor which via movement of the throttle blade controls the amount of air flowing into the engine.

OBT-Indywidualizacje.pl

# Fuel Charging and Controls - 2.5L NA V6 - AJV6 / 3.0L NA V6 - AJ27 - Fuel Charging and ControlsVIN Range: M45255->N52047

Diagnosis and Testing

## Inspection and Verification

1. **1.** Verify the customer concern.
2. **2.** Confirm which, if any, warning lights and/or messages were displayed on the instrument cluster.

• NOTE: If any warning lights and/or messages were displayed when the fault occurred, refer to the Driver Information table for DTCs associated with the display, then to the DTC index table for possible sources and actions. Some warnings will appear to clear when the ignition is cycled. This is often because the warning has flagged as a result of one of the vehicle's on-board diagnostic routines having run to detect the fault. If the same routine is not run when the ignition is switched **ON**, the warning will not reflag until the routine does run. See the DTC summaries for drive cycle routines.

3. **3.** Visually inspect for obvious signs of mechanical or electrical damage.

**Visual Inspection Chart**

| Mechanical | Electrical |
|---|---|
| • Engine oil level<br>• Cooling system coolant level<br>• Fuel level<br>• Fuel contamination/grade/quality<br>• Throttle body<br>• Poly-vee belt | • Fuses<br>• Wiring harness<br>• Electrical connector(s)<br>• Sensor(s)<br>• Engine control module (ECM)<br>• Transmission control module |

4. **4.** Verify the following systems are working correctly:

- Air intake system
- Cooling system
- Charging system
- Ignition system

5. **5.** If an obvious cause for an observed or reported concern is found, correct the cause (if possible) before proceeding to the next step.
6. **6.** Where the Jaguar approved diagnostic system is available, complete the S93 report before clearing any or all fault codes from the vehicle.

• NOTE: If a DTC cannot be cleared, then there is a permanent fault present that flags again as soon as it is cleared. (The exception to this is P1260, which will only clear following an ignition **OFF/ON** cycle after rectification).

7. **7.** If the cause is not visually evident and the Jaguar approved diagnostic system is not available, use a fault code reader to retrieve the fault codes before proceeding to the Diagnostic Trouble Code (DTC) Index Chart, or the Symptom Chart if no DTCs are set.
8. **8.** Using the Jaguar approved diagnostic system where available, and a scan tool where not, check the freeze frame data for information on the conditions applicable when the fault was flagged. The format of this will vary, depending on the tool used, but can provide information useful to the technician in diagnosing the fault.

CAUTION: When probing connectors to take measurements in the course of the pinpoint tests, use the adaptor kit, part number 3548-1358-00.

• NOTE: When performing electrical voltage or resistance tests, always use a digital multimeter (DMM) accurate to 3 decimal places, and with an up-to-date calibration certificate. When testing resistance, always take the resistance of the DMM leads into account.

• NOTE: Check and rectify basic faults before beginning diagnostic routines involving pinpoint tests.

**Symptom Chart**

| Symptom | Possible source | Action |
|---|---|---|
| Engine cranks, but does not fire | • Engine breather system disconnected/restricted<br>• Ignition system<br>• Fuel system<br>• Harness<br>• CKP sensor<br>• ECM fault | Check engine breather system, REFER to Section 303-08A Engine Emission Control / 303-08B Engine Emission Control. For ignition system, REFER to Section 303-07A Engine Ignition / 303-07B Engine Ignition / 303-07C Glow Plug System. Check fuel pressure, REFER to Section 310-01 Fuel Tank and Lines. For CKP tests, REFER to Section 303-14A Electronic Engine Controls / 303-14B Electronic Engine Controls / 303-14C Electronic Engine Controls. Contact dealer technical support for advice on possible ECM failure. |
| Engine cranks and fires, but will not start | • Purge valve<br>• Fuel pump<br>• Engine coolant temperature (ECT) sensor<br>• Spark plugs<br>• HT short to ground (tracking) check rubber boots for cracks/damage<br>• Ignition coil failure(s)<br>• Harness | For evaporative emissions components, REFER to Section 303-13 Evaporative Emissions. Check fuel pressure, REFER to Section 310-01 Fuel Tank and Lines. For ECT sensor tests, REFER to Section 303-14A Electronic Engine Controls / 303-14B Electronic Engine Controls / 303-14C Electronic Engine Controls. For ignition system REFER to Section 303-07A Engine Ignition / 303-07B Engine Ignition / 303-07C Glow Plug System. |
| Difficult to start cold | • Check coolant anti-freeze content<br>• Battery<br>• CKP sensor<br>• EGR valve stuck open<br>• Fuel pump<br>• Engine coolant temperature (ECT) sensor<br>• Purge valve | Check engine coolant level and condition. For battery information, REFER to Section 414-01 Battery, Mounting and Cables. For CKP sensor tests, REFER to Section 303-14A Electronic Engine Controls / 303-14B Electronic Engine Controls / 303-14C Electronic Engine Controls. For EGR system information, REFER to Section 303-08A Engine Emission Control / 303-08B Engine Emission Control. Check fuel pressure. REFER to Section 310-01 Fuel Tank and Lines. For ECT sensor tests, REFER to Section 303-14A Electronic Engine Controls / 303-14B Electronic Engine Controls / 303-14C Electronic Engine Controls. For |

GETTHEMANUALS.COM

| Symptom | Possible source | Action |
|---|---|---|
| | | evaporative emissions components,<br>REFER to Section 303-13 Evaporative Emissions. |
| Difficult to start hot | • Injector leak<br>• Fuel temperature sensor<br>• IAT sensor<br>• MAF sensor<br>• Purge valve<br>• Fuel pump<br>• Ignition system<br>• Engine coolant temperature (ECT) sensor<br>• EGR valve stuck open | For fuel injector information,<br>REFER to Fuel Injectors - in this section.<br>For fuel temperature sensor, IAT sensor and MAF sensor tests, REFER to Section 303-14A Electronic Engine Controls / 303-14B Electronic Engine Controls / 303-14C Electronic Engine Controls. For evaporative emissions components,<br>REFER to Section 303-13 Evaporative Emissions.<br>Check fuel pressure.<br>REFER to Section 310-01 Fuel Tank and Lines.<br>For ignition system, REFER to Section 303-07A Engine Ignition / 303-07B Engine Ignition / 303-07C Glow Plug System. For ECT sensor tests, REFER to Section 303-14A Electronic Engine Controls / 303-14B Electronic Engine Controls / 303-14C Electronic Engine Controls. For EGR information, REFER to Section 303-08A Engine Emission Control / 303-08B Engine Emission Control. |
| Difficult to start after hot soak (vehicle standing after engine has reached operating temperature) | • Injector leak<br>• Fuel temperature sensor<br>• IAT sensor<br>• MAF sensor<br>• Purge valve<br>• Fuel pump<br>• Ignition system<br>• Engine coolant temperature (ECT) sensor<br>• EGR valve stuck open | For fuel injector information,<br>REFER to Fuel Injectors in this section.<br>For fuel temperature sensor, IAT sensor and MAF sensor tests, REFER to Section 303-14A Electronic Engine Controls / 303-14B Electronic Engine Controls / 303-14C Electronic Engine Controls. For evaporative emissions components,<br>REFER to Section 303-13 Evaporative Emissions.<br>Check fuel pressure.<br>REFER to Section 310-01 Fuel Tank and Lines.<br>For ignition system, REFER to Section 303-07A Engine Ignition / 303-07B Engine Ignition / 303-07C Glow Plug System. For ECT sensor tests, REFER to Section 303-14A Electronic Engine Controls / 303-14B Electronic Engine Controls / 303-14C Electronic Engine Controls. For EGR information, REFER to Section 303-08A Engine Emission Control / 303-08B Engine Emission Control. |
| Engine stalls soon after start | • Breather system disconnected/restricted<br>• ECM relay<br>• Harness<br>• MAF sensor<br>• Engine coolant temperature (ECT) sensor<br>• Ignition system<br>• Air filter restricted<br>• Fuel lines<br>• Fuel rail pressure sensor<br>• Air leakage | For breather system information, REFER to Section 303-08A Engine Emission Control / 303-08B Engine Emission Control. For ECM relay, MAF sensor and ECT sensor tests, REFER to Section 303-14A Electronic Engine Controls / 303-14B Electronic Engine Controls / 303-14C Electronic Engine Controls. For ignition system, REFER to Section 303-07A Engine Ignition / 303-07B Engine Ignition / 303-07C Glow Plug System. For air filter information, REFER to Section 303-12A Intake Air Distribution and Filtering / 303-12B Intake Air Distribution and Filtering / 303-12C Intake Air Distribution and Filtering. For fuel line information,<br>REFER to Section 310-01 Fuel Tank and Lines.<br>For fuel rail pressure sensor tests,GO to Pinpoint Test B.. For intake system information, REFER to Section 303-12A Intake Air Distribution and Filtering / 303-12B Intake Air Distribution and Filtering / 303-12C Intake Air Distribution and Filtering. |
| Engine hesitates/poor acceleration | • Fuel pump<br>• Injector leak<br>• Fuel pressure<br>• Fuel lines<br>• Air leakage<br>• Throttle sensors<br>• Throttle motor<br>• Ignition system<br>• Exhaust gas recirculation<br>• HO2 sensors<br>• Transmission malfunction<br>• Restricted pedal travel (carpet, etc)<br>• APP sensor | Check fuel pressure.<br>REFER to Section 310-01 Fuel Tank and Lines.<br>For fuel rail pressure sensor tests,GO to Pinpoint Test B.. For fuel line information,<br>REFER to Section 310-01 Fuel Tank and Lines.<br>For intake system, REFER to Section 303-12A Intake Air Distribution and Filtering / 303-12B Intake Air Distribution and Filtering / 303-12C Intake Air Distribution and Filtering. For throttle position sensor and throttle motor tests, REFER to Section 303-14A Electronic Engine Controls / 303-14B Electronic Engine Controls / 303-14C Electronic Engine Controls. For ignition system, REFER to Section 303-07A Engine Ignition / 303-07B Engine Ignition / 303-07C Glow Plug System.<br>For exhaust gas recirculation, REFER to Section 303-08A Engine Emission Control / 303-08B Engine Emission Control. Check for DTCs indicating a faulty HO2 sensor. Refer to the DTC index. For transmission information,<br>REFER to Section 307-01 Automatic Transmission/Transaxle.<br>Check accelerator pedal travel. For APP sensor tests, REFER to Section 303-14A Electronic Engine Controls / 303-14B Electronic Engine Controls / 303-14C Electronic Engine Controls. |
| Engine backfires | • Fuel pump<br>• Fuel lines<br>• Air leakage<br>• MAF sensor<br>• Oxygen sensors<br>• Ignition system<br>• Sticking VCT hub<br>• APP sensor | Check fuel pressure.<br>REFER to Section 310-01 Fuel Tank and Lines.<br>For fuel line information,<br>REFER to Section 310-01 Fuel Tank and Lines.<br>For intake system, REFER to Section 303-12A Intake Air Distribution and Filtering / 303-12B Intake Air Distribution and Filtering / 303-12C Intake Air Distribution and Filtering. For MAF sensor tests, REFER to Section 303-14A Electronic Engine Controls / 303-14B Electronic Engine Controls / 303-14C Electronic Engine Controls. Check for DTCs indicating a faulty HO2 sensor. Refer to the DTC index.<br>For ignition system, REFER to Section 303-07A Engine Ignition / 303-07B Engine Ignition / 303-07C Glow Plug System. Check DTCs for VCT range/performance fault. For VCT information, REFER to Section 303-01A Engine / 303-01B Engine / 303-01C Engine. For APP sensor tests, REFER to Section 303-14A Electronic Engine Controls / 303-14B Electronic Engine Controls / 303-14C Electronic Engine Controls. |
| Engine surges | • Fuel pump<br>• Fuel lines<br>• MAF sensor<br>• Harness<br>• Throttle sensors<br>• Throttle motor<br>• Ignition system | Check fuel pressure.<br>REFER to Section 310-01 Fuel Tank and Lines.<br>For fuel line information,<br>REFER to Section 310-01 Fuel Tank and Lines.<br>For MAF sensor, throttle sensor, and throttle motor relay tests, REFER to Section 303-14A Electronic Engine Controls / 303-14B Electronic Engine Controls / 303-14C Electronic Engine Controls. For ignition system, REFER to Section 303-07A Engine Ignition / 303-07B Engine Ignition / 303-07C Glow Plug System. |
| Engine detonates/knocks | • KS/circuit malfunction<br>• Fuel pump<br>• Fuel lines<br>• FRP sensor<br>• MAF sensor<br>• Oxygen sensors<br>• Air leakage<br>• Sticking VCT hub<br>• BARO sensor malfunction | For KS circuit tests, REFER to Section 303-14A Electronic Engine Controls / 303-14B Electronic Engine Controls / 303-14C Electronic Engine Controls. Check fuel pressure.<br>REFER to Section 310-01 Fuel Tank and Lines.<br>For fuel line information,<br>REFER to Section 310-01 Fuel Tank and Lines.<br>For fuel rail pressure sensor tests,GO to Pinpoint Test B.. For MAF sensor and oxygen sensor tests, REFER to Section 303-14A Electronic Engine Controls / 303-14B Electronic Engine Controls / 303-14C Electronic Engine Controls. For |

GETtheMANUALS.org

| Symptom | Possible source | Action |
|---|---|---|
| | | intake system, REFER to Section 303-12A Intake Air Distribution and Filtering / 303-12B Intake Air Distribution and Filtering / 303-12C Intake Air Distribution and Filtering. Check DTCs for VCT range/performance fault. For VCT information, REFER to Section 303-01A Engine / 303-01B Engine / 303-01C Engine. For BARO sensor, contact dealer technical support for advice on possible ECM failure |
| No throttle response | • APP sensor malfunction<br>• Throttle sensors<br>• Throttle motor | For APP sensor, throttle position sensor and throttle motor relay tests, REFER to Section 303-14A Electronic Engine Controls / 303-14B Electronic Engine Controls / 303-14C Electronic Engine Controls. |
| Poor throttle response | • APP sensor malfunction<br>• Throttle sensors<br>• Engine coolant temperature (ECT) sensor<br>• MAF sensor<br>• Transmission malfunction<br>• Traction control event<br>• Air leakage<br>• Breather system disconnected/restricted | For APP sensor, throttle position sensor, ECT sensor and MAF sensor tests, REFER to Section 303-14A Electronic Engine Controls / 303-14B Electronic Engine Controls / 303-14C Electronic Engine Controls. For transmission information, REFER to Section 307-01 Automatic Transmission/Transaxle.<br>For intake system, REFER to Section 303-12A Intake Air Distribution and Filtering / 303-12B Intake Air Distribution and Filtering / 303-12C Intake Air Distribution and Filtering. For breather system information, REFER to Section 303-08A Engine Emission Control / 303-08B Engine Emission Control. |

## Driver Information Chart

• NOTE: Use this table to identify DTCs associated with the message centre display, then refer to the DTC index for possible sources and actions. For a list of all DTCs flagged by the ECM, REFER to Section 303-14A Electronic Engine Controls / 303-14B Electronic Engine Controls / 303-14C Electronic Engine Controls.

• NOTE: For definitions of Default Modes, see the foot of this table.

| Warning light | Message | Default Mode | DTC |
|---|---|---|---|
| Red | Engine systems fault | Engine shut-down (all cylinders fuel cut) | P1224 |
| Red | Engine systems fault | Limp-Home | P1229 |
| Red | Engine systems fault | Limp-Home | P0121, P0122, P0123, P0222, P0223 |
| Red | Engine systems fault | Limp-Home | P1251, P1631 |
| Red | Engine systems fault | Limp-Home | P1611 |
| Red | Engine systems fault | Limp-Home | P1633 |
| Red | Engine systems fault | High idle | P1344, P1122, P1123, P1215, P1216 |
| Red | Restricted Performance | Limp-Home unavailable | P1254 |
| Red | Restricted Performance | Limp-Home unavailable | P1250 |
| Red | Restricted Performance | Safety redundancy | P1657, P1658 |
| Red | Restricted Performance | Safety redundancy | P16634 |
| Amber | Restricted Performance | Engine speed limited | P0116, P0117, P0118, P0125 |
| Amber | Restricted Performance | Engine speed limited | P0101, P0102, P0103, P0104 |
| Amber | Restricted Performance | Engine speed limited | P0300, P0301, p0302, P0303, P0304, P0305, P0306, P0307, P0308, P1313, P1314 |
| Amber | Restricted Performance | Engine speed limited | P0327, P0328, P0332, P0333, P1648 |
| Amber | Restricted Performance | Engine speed limited | P0351, P0352, P0353, P0354, P0355, P0356, P0357, P0358, P1367, P1368 |
| Amber | Restricted Performance | Engine speed limited | P0171, P0172, P0174, P0175 |
| Amber | Restricted Performance | Engine speed limited | P0201, P0202, P0203, P0204, P0205, P0206, P0207, P0208 |
| Amber | Restricted Performance | Engine speed limited | P0335, P0336 |
| Amber | Restricted Performance | Engine speed limited, Reverse throttle progression enabled | P1642 |
| Amber | Restricted Performance | Engine speed limited, Reverse throttle progression enabled | P1643 |
| Amber | Restricted Performance | Engine speed limited, Reverse throttle progression enabled | P0096, P0097, P0098 |
| Amber | Restricted Performance | Engine speed limited, Reverse throttle progression enabled | P1474 |
| Amber | Restricted Performance | Engine speed limited | P1234, P1236, P1338 |
| Amber | None | None | P0506, P0507 |
| Amber | None | None | P1656 |
| Amber | Gearbox fault/Restricted performance | Gearbox default to set gear | P0725 |
| Amber | Gearbox fault/Restricted performance | Gearbox default to set gear | P1796 |
| Amber | Gearbox fault/Restricted performance | Gearbox default to set gear | P0701 |
| Amber | Gearbox fault/Restricted performance | Gearbox default to set gear | P1603 |
| Amber | Gearbox fault/Restricted performance | Gearbox default to set gear | P0605 |
| Amber | Gearbox fault/Restricted performance | Gearbox default to set gear | P1719 |
| Amber | Gearbox fault/Restricted performance | Gearbox default to set gear | P0720 |
| Amber | Gearbox fault/Restricted performance | Gearbox default to set gear | P0715 |
| Amber | Gearbox fault/Restricted performance | Gearbox default to set gear | P0705 |
| Amber | Gearbox fault/Restricted performance | Gearbox default to set gear | P0610 |
| Amber | Gearbox fault/Restricted performance | Gearbox default to set gear | P0606 |

GETtheMANUALS.org

| Warning light | Message | Default Mode | DTC |
|---|---|---|---|
| Amber | Gearbox fault/Restricted performance | Gearbox default to set gear | P0750 |
| Amber | Gearbox fault/Restricted performance | Gearbox default to set gear | P0753 |
| Amber | Gearbox fault/Restricted performance | Gearbox default to set gear | P0755 |
| Amber | Gearbox fault/Restricted performance | Gearbox default to set gear | P0758 |
| Amber | Gearbox fault/Restricted performance | Gearbox default to set gear | P0760 |
| Amber | Gearbox fault/Restricted performance | Gearbox default to set gear | P0763 |
| Amber | Gearbox fault/Restricted performance | Gearbox default to set gear | P0765 |
| Amber | Gearbox fault/Restricted performance | Gearbox default to set gear | P0768 |
| Amber | Gearbox fault/Restricted performance | Gearbox default to set gear | P0770 |
| Amber | Gearbox fault/Restricted performance | Gearbox default to set gear | P0773 |
| Amber | Gearbox fault/Restricted performance | Gearbox default to set gear | P0740 |
| Amber | Gearbox fault/Restricted performance | Gearbox default to set gear | P0743 |
| Amber | Gearbox fault/Restricted performance | Gearbox default to set gear | P0787 |
| Amber | Gearbox fault/Restricted performance | Gearbox default to set gear | P0788 |
| Amber | Gearbox fault/Restricted performance | Gearbox default to set gear | P0730 |
| Amber | Gearbox fault/Restricted performance | Gearbox default to set gear | P0731 |
| Amber | Gearbox fault/Restricted performance | Gearbox default to set gear | P0732 |
| Amber | Gearbox fault/Restricted performance | Gearbox default to set gear | P0733 |
| Amber | Gearbox fault/Restricted performance | Gearbox default to set gear | P0734 |
| Amber | Gearbox fault/Restricted performance | Gearbox default to set gear | P0735 |
| Amber | Gearbox fault/Restricted performance | Gearbox default to set gear | P0729 |
| Amber | Gearbox fault/Restricted performance | Gearbox default to set gear | P0781 |
| Amber | Gearbox fault/Restricted performance | Gearbox default to set gear | P0782 |
| Amber | Gearbox fault/Restricted performance | Gearbox default to set gear | P0783 |
| Amber | Gearbox fault/Restricted performance | Gearbox default to set gear | P0784 |
| Amber | Gearbox fault/Restricted performance | Gearbox default to set gear | P0829 |
| Amber | Gearbox fault/Restricted performance | Engine speed limited, reverse throttle progression enabled | P1797 |
| Amber | Gearbox fault/Restricted performance | Gearbox default to set gear | P0641 |
| Amber | Gearbox fault/Restricted performance | Gearbox default to set gear | P0651 |
| Amber | Gearbox fault/Restricted performance | Gearbox default to set gear | P0860 |
| Amber | Gearbox fault/Restricted performance | Limp-home | P1783 |

## Default mode Definitions

**LIMP-HOME MODE**

- Throttle motor off
- Throttle motor relay off
- Throttle motor circuit off
- Fuel intervention
- Cruise control inhibited

**LIMP-HOME UNAVAILABLE**

- Power limitation
- Vehicle speed limited to 120 kph
- Reverse throttle progression enabled
- Cruise control Inhibited

**REVERSE THROTTLE PROGRESSION**

- Throttle opening limited to maximum 30%

• NOTE: The throttle operation uses the same map as for reverse gear.

GETtheMANUALS.org

**ENGINE SPEED LIMITED**

- Engine runs normally, up to 3000 rpm
- Engine speed restricted to 3000 rpm maximum, by fuel cut-off

**HIGH IDLE**

- Throttle valve kept in fixed position by motor
- Cruise control Inhibited

**SAFETY REDUNDANCY**

- Power limitation
- Vehicle speed limited to 120 kph
- Reverse throttle progression enabled
- Cruise Control Inhibited

## Diagnostic Trouble Code (DTC) index

| DTC | Condition | Possible Causes | Action |
|---|---|---|---|
| P0171 | Right-hand cylinders combustion too lean | • Air intake leak between mass air flow (MAF) sensor and cylinder head<br>• Fuel filter/system restriction<br>• Fuel injector restriction<br>• Fuel rail pressure (FRP) sensor fault (low fuel pressure)<br>• Low fuel pump output<br>• HO2S/catalyst monitor sensor harness wiring condition fault<br>• EFT sensor fault (low fuel temperature)<br>• Mass air flow (MAF) sensor fault (low intake air flow)<br>• Exhaust leak (before catalyst)<br>• ECM receiving incorrect signal from one or more of the following sensors; ECT, MAF*, IAT, fuel rail temperature | For intake system, REFER to Section 303-12A Intake Air Distribution and Filtering / 303-12B Intake Air Distribution and Filtering / 303-12C Intake Air Distribution and Filtering. For fuel injector, REFER to Fuel Injectors - in this section.<br>For fuel filter and pump, REFER to Section 310-01 Fuel Tank and Lines.<br>For FRP sensor circuit tests, GO to Pinpoint Test B..<br>For HO2S/Catalyst monitor sensor tests, REFER to Section 303-14A Electronic Engine Controls / 303-14B Electronic Engine Controls / 303-14C Electronic Engine Controls. For exhaust system, REFER to Section 309-00 Exhaust System.<br>For sensor tests, REFER to Section 303-14A Electronic Engine Controls / 303-14B Electronic Engine Controls / 303-14C Electronic Engine Controls.<br>* If this DTC is flagged, pay particular attention to the MAF sensor. |
| P0172 | Right-hand cylinders combustion too rich | • Engine misfire<br>• Restricted air filter<br>• Leaking fuel injector(s)<br>• FRP sensor failure (high fuel pressure)<br>• EFT sensor fault (high fuel temperature)<br>• MAF sensor fault (high intake air flow)<br>• HO2S/catalyst monitor sensor harness wiring condition fault<br>• ECM receiving incorrect signal from one or more of the following sensors; ECT, MAF, IAT, FRP, EFT. | Check for "misfire detected" DTCs in this section; For intake system, REFER to Section 303-12A Intake Air Distribution and Filtering / 303-12B Intake Air Distribution and Filtering / 303-12C Intake Air Distribution and Filtering. For fuel injector, REFER to Fuel Injectors - in this section.<br>For FRP sensor circuit tests, GO to Pinpoint Test B..<br>For other sensor tests, REFER to Section 303-14A Electronic Engine Controls / 303-14B Electronic Engine Controls / 303-14C Electronic Engine Controls. |
| P0174 | Left-hand cylinders combustion too lean | • Air intake leak between MAF sensor and cylinder head<br>• Fuel filter/system restriction<br>• Fuel injector restriction<br>• FRP sensor failure (low fuel pressure)<br>• Low fuel pump output<br>• HO2S/catalyst monitor sensor harness wiring condition fault<br>• EFT sensor fault (low fuel temperature)<br>• Mass air flow (MAF) sensor fault (low intake air flow)<br>• Exhaust leak (before catalyst)<br>• ECM receiving incorrect signal from one or more of the following sensors; ECT, MAF*, IAT, FRP, EFT, TP. | For intake system, REFER to Section 303-12A Intake Air Distribution and Filtering / 303-12B Intake Air Distribution and Filtering / 303-12C Intake Air Distribution and Filtering. For fuel injectors, REFER to Fuel Injectors - in this section.<br>For fuel filter, pump and lines, REFER to Section 310-01 Fuel Tank and Lines.<br>For HO2S/catalyst monitor sensor tests, REFER to Section 303-14A Electronic Engine Controls / 303-14B Electronic Engine Controls / 303-14C Electronic Engine Controls. For exhaust system, REFER to Section 309-00 Exhaust System.<br>For FRP sensor tests,GO to Pinpoint Test B.. For other sensor tests, REFER to Section 303-14A Electronic Engine Controls / 303-14B Electronic Engine Controls / 303-14C Electronic Engine Controls.<br>* If this DTC is flagged, pay particular attention to the MAF sensor. |
| P0175 | Left-hand cylinders combustion too rich | • Engine misfire<br>• Restricted air filter<br>• Leaking fuel injector(s)<br>• FRP sensor failure (high fuel pressure)<br>• ECM receiving incorrect signal from one or more of the following sensors; ECT, MAF, IAT, fuel rail pressure, fuel rail temperature | Check for "misfire detected" DTCs in this section. For intake system, REFER to Section 303-12A Intake Air Distribution and Filtering / 303-12B Intake Air Distribution and Filtering / 303-12C Intake Air Distribution and Filtering. For fuel injectors, REFER to Fuel Injectors - in this section.<br>For FRP sensor tests, GO to Pinpoint Test B.. For other sensor tests, REFER to Section 303-14A Electronic Engine Controls / 303-14B Electronic Engine Controls / 303-14C Electronic Engine Controls. |
| P0191 | Fuel rail pressure (FRP) sensor circuit range/performance | • Fuel filter/system restriction<br>• Fuel system leak<br>• Incorrect fuel pump output<br>• FRP sensor to ECM sensing circuit; high resistance, open circuit, short circuit to high voltage<br>• FRP sensor to splice in sensor supply circuit; high resistance, open circuit<br>• FRP sensor to splice in sensor ground circuit; high resistance, | For fuel filter, pump and lines, REFER to Section 310-01 Fuel Tank and Lines.<br>For FRP sensor tests,GO to Pinpoint Test B.. |

CarTheMANUALS.org

| DTC | Condition | Possible Causes | Action |
|---|---|---|---|
| | | open circuit, short circuit to ground, short circuit to high voltage<br>• FRP sensor failure | |
| P0192 | Fuel rail pressure (FRP) sensor circuit low voltage (low pressure) | • FRP sensor disconnected<br>• FRP sensor to ECM sensing circuit; open circuit or short circuit to ground<br>• FRP sensor to splice in sensor supply circuit; high resistance, open circuit<br>• FRP sensor failure | For FRP sensor tests, GO to Pinpoint Test B. . |
| P0193 | Fuel rail pressure (FRP) sensor circuit high voltage (high pressure) | • FRP sensor to ECM wiring (supply/sense); short circuit to each other<br>• FRP sensor to ECM sense circuit; short circuit to high voltage<br>• FRP sensor to splice in sensor ground circuit; open circuit<br>• FRP sensor failure | For FRP sensor tests, GO to Pinpoint Test B. . |
| P0201 | Fuel injector circuit malfunction, Cyl 1 | • Injector disconnected<br>• Injector wiring open or short circuit<br>• Injector failure | For fuel injectors,<br>REFER to Fuel Injectors - in this section.<br>For fuel injector circuit tests,GO to Pinpoint Test A. . |
| P0202 | Fuel injector circuit malfunction, Cyl 2 | • Injector disconnected<br>• Injector wiring open or short circuit<br>• Injector failure | For fuel injectors,<br>REFER to Fuel Injectors - in this section.<br>For fuel injector circuit tests,GO to Pinpoint Test A. . |
| P0203 | Fuel injector circuit malfunction, Cyl 3 | • Injector disconnected<br>• Injector wiring open or short circuit<br>• Injector failure | For fuel injectors,<br>REFER to Fuel Injectors - in this section.<br>For fuel injector circuit tests,GO to Pinpoint Test A. . |
| P0204 | Fuel injector circuit malfunction, Cyl 4 | • Injector disconnected<br>• Injector wiring open or short circuit<br>• Injector failure | For fuel injectors,<br>REFER to Fuel Injectors - in this section.<br>For fuel injector circuit tests,GO to Pinpoint Test A. . |
| P0205 | Fuel injector circuit malfunction, Cyl 5 | • Injector disconnected<br>• Injector wiring open or short circuit<br>• Injector failure | For fuel injectors,<br>REFER to Fuel Injectors - in this section.<br>For fuel injector circuit tests,GO to Pinpoint Test A. . |
| P0206 | Fuel injector circuit malfunction, Cyl 6 | • Injector disconnected<br>• Injector wiring open or short circuit<br>• Injector failure | For fuel injectors,<br>REFER to Fuel Injectors - in this section.<br>For fuel injector circuit tests,GO to Pinpoint Test A. . |
| P0300 | Random misfire detected | • ECM to ignition coil primary circuit fault (cylinder misfire detected DTC also flagged)<br>• Ignition coil failure<br>• Spark plug failure/fouled/incorrect gap<br>• Fuel injector circuit fault(s) (injector DTCs also flagged)<br>• Fuel delivery pressure high/low<br>• Fuel injectors restricted/leaking<br>• Fuel injectors continuously open<br>• Fuel contamination<br>• Worn camshaft/broken valve springs | For ignition system, REFER to Section 303-07A Engine Ignition / 303-07B Engine Ignition / 303-07C Glow Plug System. For injector circuit tests,GO to Pinpoint Test A. . Check fuel pressure,<br>REFER to Section 310-01 Fuel Tank and Lines.<br>For fuel injectors,<br>REFER to Fuel Injectors - in this section.<br>For engine information, REFER to Section 303-01A Engine / 303-01B Engine / 303-01C Engine. |
| P0301 | Misfire detected, cylinder 1 | • ECM to ignition coil primary circuit fault (cylinder misfire detected DTC also flagged)<br>• Ignition coil failure<br>• Spark plug failure/fouled/incorrect gap<br>• Fuel injector circuit fault(s) (injector DTCs also flagged)<br>• Fuel delivery pressure high/low<br>• Fuel injectors restricted/leaking<br>• Fuel injectors continuously open<br>• Fuel contamination<br>• Worn camshaft/broken valve springs | For ignition system, REFER to Section 303-07A Engine Ignition / 303-07B Engine Ignition / 303-07C Glow Plug System. For injector circuit tests,GO to Pinpoint Test A. . Check fuel pressure,<br>REFER to Section 310-01 Fuel Tank and Lines.<br>For fuel injectors,<br>REFER to Fuel Injectors - in this section.<br>For engine information, REFER to Section 303-01A Engine / 303-01B Engine / 303-01C Engine. |
| P0302 | Misfire detected, cylinder 2 | • ECM to ignition coil primary circuit fault (cylinder misfire detected DTC also flagged)<br>• Ignition coil failure<br>• Spark plug failure/fouled/incorrect gap<br>• Fuel injector circuit fault(s) (injector DTCs also flagged)<br>• Fuel delivery pressure high/low | For ignition system, REFER to Section 303-07A Engine Ignition / 303-07B Engine Ignition / 303-07C Glow Plug System. For injector circuit tests,GO to Pinpoint Test A. . Check fuel pressure,<br>REFER to Section 310-01 Fuel Tank and Lines.<br>For fuel injectors,<br>REFER to Fuel Injectors - in this section.<br>For engine information, REFER to Section 303-01A Engine / 303-01B Engine / 303-01C Engine. |

GETtheMANUALS.org

| DTC | Condition | Possible Causes | Action |
|---|---|---|---|
| | | • Fuel injectors restricted/leaking<br>• Fuel injectors continuously open<br>• Fuel contamination<br>• Worn camshaft/broken valve springs | |
| P0303 | Misfire detected, cylinder 3 | • ECM to ignition coil primary circuit fault (cylinder misfire detected DTC also flagged)<br>• Ignition coil failure<br>• Spark plug failure/fouled/incorrect gap<br>• Fuel injector circuit fault(s) (injector DTCs also flagged)<br>• Fuel delivery pressure high/low<br>• Fuel injectors restricted/leaking<br>• Fuel injectors continuously open<br>• Fuel contamination<br>• Worn camshaft/broken valve springs | For ignition system, REFER to Section 303-07A Engine Ignition / 303-07B Engine Ignition / 303-07C Glow Plug System. For injector circuit tests,GO to Pinpoint Test A.. Check fuel pressure,<br>REFER to Section 310-01 Fuel Tank and Lines.<br>For fuel injectors,<br>REFER to Fuel Injectors - in this section.<br>For engine information, REFER to Section 303-01A Engine / 303-01B Engine / 303-01C Engine. |
| P0304 | Misfire detected, cylinder 4 | • ECM to ignition coil primary circuit fault (cylinder misfire detected DTC also flagged)<br>• Ignition coil failure<br>• Spark plug failure/fouled/incorrect gap<br>• Fuel injector circuit fault(s) (injector DTCs also flagged)<br>• Fuel delivery pressure high/low<br>• Fuel injectors restricted/leaking<br>• Fuel injectors continuously open<br>• Fuel contamination<br>• Worn camshaft/broken valve springs | For ignition system, REFER to Section 303-07A Engine Ignition / 303-07B Engine Ignition / 303-07C Glow Plug System. For injector circuit tests,GO to Pinpoint Test A.. Check fuel pressure,<br>REFER to Section 310-01 Fuel Tank and Lines.<br>For fuel injectors,<br>REFER to Fuel Injectors - in this section.<br>For engine information, REFER to Section 303-01A Engine / 303-01B Engine / 303-01C Engine. |
| P0305 | Misfire detected, cylinder 5 | • ECM to ignition coil primary circuit fault (cylinder misfire detected DTC also flagged)<br>• Ignition coil failure<br>• Spark plug failure/fouled/incorrect gap<br>• Fuel injector circuit fault(s) (injector DTCs also flagged)<br>• Fuel delivery pressure high/low<br>• Fuel injectors restricted/leaking<br>• Fuel injectors continuously open<br>• Fuel contamination<br>• Worn camshaft/broken valve springs | For ignition system, REFER to Section 303-07A Engine Ignition / 303-07B Engine Ignition / 303-07C Glow Plug System. For injector circuit tests,GO to Pinpoint Test A.. Check fuel pressure,<br>REFER to Section 310-01 Fuel Tank and Lines.<br>For fuel injectors,<br>REFER to Fuel Injectors - in this section.<br>For engine information, REFER to Section 303-01A Engine / 303-01B Engine / 303-01C Engine. |
| P0306 | Misfire detected, cylinder 6 | • ECM to ignition coil primary circuit fault (cylinder misfire detected DTC also flagged)<br>• Ignition coil failure<br>• Spark plug failure/fouled/incorrect gap<br>• Fuel injector circuit fault(s) (injector DTCs also flagged)<br>• Fuel delivery pressure high/low<br>• Fuel injectors restricted/leaking<br>• Fuel injectors continuously open<br>• Fuel contamination<br>• Worn camshaft/broken valve springs | For ignition system, REFER to Section 303-07A Engine Ignition / 303-07B Engine Ignition / 303-07C Glow Plug System. For injector circuit tests,GO to Pinpoint Test A.. Check fuel pressure,<br>REFER to Section 310-01 Fuel Tank and Lines.<br>For fuel injectors,<br>REFER to Fuel Injectors - in this section.<br>For engine information, REFER to Section 303-01A Engine / 303-01B Engine / 303-01C Engine. |
| P0460 | Fuel level sensor circuit range/performance | • Fuel level sensor to rear electronic control module circuit(s); intermittent short circuit, open circuit, high resistance<br>• Fuel level sensor failure<br>• Rear electronic control module fault (incorrect fuel level data) | For fuel level sensor and circuit tests,<br>REFER to Section 310-01 Fuel Tank and Lines. |
| P1224 | Throttle control position error | • Throttle motor failure<br>• Throttle body failure | This DTC can only be accurately diagnosed using the Jaguar approved diagnostic system. If this is not available, INSTALL a new throttle body.<br>REFER to Throttle Body - in this section.<br>CLEAR the DTC, TEST the system for normal operation. |
| P1229 | Throttle motor control circuit malfunction | • Throttle motor disconnected<br>• Throttle motor to ECM drive circuits; short circuit or open circuit<br>• ECM ground circuit fault(s) (EM80-04, 05, 54)<br>• Throttle motor failure<br>• Throttle body failure | For throttle motor and circuit tests, and for ECM ground tests, REFER to Section 303-14A Electronic Engine Controls / 303-14B Electronic Engine Controls / 303-14C Electronic Engine Controls. For throttle body,<br>REFER to Throttle Body - in this section. |

GETtheMANUALS.org

| DTC | Condition | Possible Causes | Action |
|---|---|---|---|
| P1234 | No fuel pump commands received by ECM | • ECM to fuel pump module drive circuit; open circuit, short circuit, high resistance<br>• Fuel pump module failure | For fuel pump module circuit tests, REFER to Section 310-01 Fuel Tank and Lines. |
| P1236 | Fuel pump not activated when requested by ECM | • ECM to fuel pump module drive circuit; open circuit, short circuit, high resistance<br>• Fuel pump module failure | For fuel pump module circuit tests, REFER to Section 310-01 Fuel Tank and Lines. |
| P1250 | Throttle return spring failure malfunction | Throttle return spring failure (throttle body failure) | This DTC can only be accurately diagnosed using the Jaguar approved diagnostic system. If this is not available, INSTALL a new throttle body.<br>REFER to Throttle Body - in this section.<br>CLEAR the DTC, TEST the system for normal operation. |
| P1251 | Throttle motor relay **OFF** failure | • Throttle motor relay coil power supply circuit; open circuit<br>• Throttle motor relay failure<br>• Throttle motor relay coil to ECM circuit; open circuit<br>• ECM ground circuit fault (relay coil drive) | For throttle motor relay tests, REFER to Section 303-14A Electronic Engine Controls / 303-14B Electronic Engine Controls / 303-14C Electronic Engine Controls. |
| P1254 | Throttle limp-home spring malfunction | Throttle body | This DTC can only be accurately diagnosed using the Jaguar approved diagnostic system. If this is not available, INSTALL a new throttle body.<br>REFER to Throttle Body - in this section.<br>CLEAR the DTC, TEST the system for normal operation. |
| P1313 | Right-hand cylinders misfire rate catalyst damage (this DTC will flag only when accompanied by an individual cylinder misfire DTC; P0300-P0306) | Refer to P0300 possible sources | Refer to P0300 Actions |
| P1314 | Left-hand cylinders misfire rate catalyst damage (this DTC will flag only when accompanied by an individual cylinder misfire DTC; P0300-P0306) | Refer to P0300 possible sources | Refer to P0300 Actions |
| P1316 | Misfire excess emission (Note: This DTC will flag only when accompanied by an individual cylinder misfire DTC; P0300 to P0306) | Refer to P0300 possible sources | Refer to P0300 Actions |
| P1338 | Fuel pump drive circuit low/high voltage | • Fuel pump module to fuel pump drive circuit; open circuit, short circuit, high resistance<br>• Fuel pump module failure<br>• Fuel pump failure | For fuel pump module circuit tests, REFER to Section 310-01 Fuel Tank and Lines. |
| P1631 | Throttle motor power relay coil activation circuit failure | • Throttle motor relay coil to ECM circuit; open circuit<br>• Throttle motor relay failure<br>• Throttle motor relay coil to ECM drive circuit; open circuit, short circuit to ground | For throttle motor relay tests, REFER to Section 303-14A Electronic Engine Controls / 303-14B Electronic Engine Controls / 303-14C Electronic Engine Controls. |
| P1634 | Throttle watchdog circuit malfunction | • ECM failure | Contact dealer technical support for advice on possible ECM failure. |
| P1656 | Throttle position (TP) sensor amplifier circuit malfunction | • ECM failure | Contact dealer technical support for advice on possible ECM failure. |
| P1657 | Throttle motor relay coil drive circuit **ON** failure | • Throttle motor relay failure<br>• Throttle motor relay coil to ECM drive circuit; short circuit to B+ voltage | For throttle motor relay tests, REFER to Section 303-14A Electronic Engine Controls / 303-14B Electronic Engine Controls / 303-14C Electronic Engine Controls. |
| P1658 | Throttle motor relay **ON** failure | • Throttle motor relay failure<br>• Throttle motor relay coil to ECM drive circuit; short circuit to B+ voltage | For throttle motor relay tests, REFER to Section 303-14A Electronic Engine Controls / 303-14B Electronic Engine Controls / 303-14C Electronic Engine Controls. |

## Pinpoint Tests

| PINPOINT TEST A : DTC P0201, P0202, P0203, P0204, P0205, P0206; FUEL INJECTORS | |
|---|---|
| • NOTE: The DTC set will indicate which cylinder injector or circuit is faulty. Only in the event of multiple cylinder misfires will it be necessary to check more than one injector or circuit, in which case, multiple DTCs will be set. | |
| **TEST CONDITIONS** | **DETAILS/RESULTS/ACTIONS** |
| **A1: CHECK THE INJECTOR COIL RESISTANCE** | |
| | 1 Turn the ignition switch to the **OFF** position. |
| | 2 Disconnect the battery negative terminal. |
| | 3 Disconnect the relevant injector electrical connector (IL03 to IL08). |
| | 4 Measure the resistance between the injector pins. |
| | Is the resistance between 12 and 16 ohms?<br>**Yes**<br>GO to A2.<br>**No**<br>INSTALL a new injector. |

GETtheMANUALS.org

| | |
|---|---|
| | REFER to Fuel Injectors - in this section.<br>CLEAR the DTC. TEST the system for normal operation. |
| **A2: CHECK THE INJECTOR COIL INSULATION** | |
| | 1 Measure the resistance between the injector pin 01 and the injector body. |
| | 2 Measure the resistance between the injector pin 02 and the injector body. |
| | Is either resistance less than 10,000 ohms?<br>**Yes**<br>INSTALL a new injector.<br>REFER to Fuel Injectors - in this section.<br>CLEAR the DTC. TEST the system for normal operation.<br>**No**<br>GO to A3. |
| **A3: CHECK THE INJECTOR SUPPLY VOLTAGE** | |
| | 1 Reconnect the battery negative terminal. |
| | 2 Turn the ignition switch to the **ON** position. |
| | 3 Disconnect the relevant injector harness electrical connector (IL03 to IL08). |
| | 4 Measure the voltage between the relevant injector harness electrical connector (IL03 to IL08) pin 02 and GROUND. |
| | Is the voltage less than 10 Volts?<br>**Yes**<br>REPAIR the circuit between the relevant injector harness electrical connector (IL03 to IL08) pin 02 and battery. This circuit includes the front power distribution box, fuse 13, and the EMS relay. For additional information, refer to the wiring diagrams. CLEAR the DTC. TEST the system for normal operation.<br>**No**<br>GO to A4. |
| **A4: CHECK THE INJECTOR GROUND CIRCUIT** | |
| | 1 Turn the ignition switch to the **OFF** position. |
| | 2 Disconnect the battery negative terminal. |
| | 3 Disconnect the ECM electrical connector PI01. |
| | 4 Measure the resistance between the relevant injector harness electrical connector (IL03 to IL08) pin 01 and PI01 pins as follows:<br>• Injector Cyl 1 pin 01 (BG) and PI01, pin 115 (BG).<br>• Injector Cyl 2 pin 01 (BR) and PI01, pin 120 (BR).<br>• Injector Cyl 3 pin 01 (BK) and PI01, pin 114 (BK).<br>• Injector Cyl 4 pin 01 (BO) and PI01, pin 119 (BO).<br>• Injector Cyl 5 pin 01 (BG) and PI01, pin 113 (BG).<br>• Injector Cyl 6 pin 01 (U) and PI01, pin 118 (U). |
| | Is the resistance greater than 5 ohms?<br>**Yes**<br>REPAIR the high resistance circuit. For additional information, refer to the wiring diagrams. CLEAR the DTC. TEST the system for normal operation.<br>**No**<br>GO to A5. |
| **A5: CHECK THE INJECTOR GROUND CIRCUIT FOR SHORT CIRCUIT TO BATTERY** | |
| | 1 Reconnect the battery negative terminal. |
| | 2 Turn the ignition switch to the **ON** position. |
| | 3 Measure the voltage between the relevant injector harness electrical connector (IL03 to IL08) pin 01 and GROUND. |
| | Is the voltage greater than 3 volts?<br>**Yes**<br>REPAIR the short circuit. For additional information, refer to the wiring diagrams. CLEAR the DTC. TEST the system for normal operation.<br>**No**<br>GO to A6. |
| **A6: CHECK THE INJECTOR GROUND CIRCUIT FOR SHORT CIRCUIT TO GROUND** | |
| | 1 Measure the resistance between the relevant injector harness electrical connector (IL03 to IL08) pin 01 and GROUND. |
| | Is the resistance less than 10,000 ohms?<br>**Yes**<br>REPAIR the short circuit. For additional information, refer to the wiring diagrams. CLEAR the DTC. TEST the system for normal operation.<br>**No**<br>Contact dealer technical support for advice on possible ECM failure. |

## PINPOINT TEST B : DTC P0190, P0192, P0193; FUEL RAIL PRESSURE (FRP) SENSOR

• NOTE: For sensor supply tests, REFER to Section 303-14A Electronic Engine Controls / 303-14B Electronic Engine Controls / 303-14C Electronic Engine Controls.

• NOTE: For sensor ground tests, REFER to Section 303-14A Electronic Engine Controls / 303-14B Electronic Engine Controls / 303-14C Electronic Engine Controls.

| TEST CONDITIONS | DETAILS/RESULTS/ACTIONS |
|---|---|
| **B1: CHECK THE FRP SENSOR SIGNAL CIRCUIT FOR HIGH RESISTANCE** | |
| | 1 Turn the ignition switch to the **OFF** position. |
| | 2 Disconnect the battery negative terminal. |
| | 3 Disconnect the FRP sensor electrical connector, IL12. |
| | 4 Measure the resistance between IL12 pin 03 (U) and PI01 pin 73 (U). |
| | Is the resistance greater than 5 ohms?<br>**Yes**<br>REPAIR the high resistance circuit. For additional information, refer to the wiring diagrams. CLEAR the DTC. TEST the system for normal operation.<br>**No**<br>GO to B2. |
| **B2: CHECK THE FRP SENSOR SIGNAL CIRCUIT FOR SHORT TO HIGH VOLTAGE** | |
| | 1 Reconnect the battery negative terminal. |
| | 2 Turn the ignition switch to the **ON** position. |
| | 3 Measure the voltage between IL12 pin 03 (U) and GROUND. |

GETthemANUALS.org

| | |
|---|---|
| | Is the voltage greater than 3 volts?<br>**Yes**<br>REPAIR the short circuit. For additional information, refer to the wiring diagrams. CLEAR the DTC. TEST the system for normal operation.<br>**No**<br>GO to B3. |
| **B3: CHECK THE FRP SENSOR SIGNAL CIRCUIT FOR SHORT TO GROUND** | |
| | 1 Turn the ignition switch to the **OFF** position. |
| | 2 Measure the resistance between the FRP sensor electrical connector IL12 pin 03 (U) and GROUND. |
| | Is the resistance less than 10,000 ohms?<br>**Yes**<br>REPAIR the short circuit. For additional information, refer to the wiring diagrams. CLEAR the DTC. TEST the system for normal operation.<br>**No**<br>Recheck the DTCs. Check the sensor supply and ground circuits. REFER to Section 303-14A Electronic Engine Controls / 303-14B Electronic Engine Controls / 303-14C Electronic Engine Controls. |

GETtheMANUALS.org

# Fuel Charging and Controls - 2.5L NA V6 - AJV6 / 3.0L NA V6 - AJ27 - Fuel Charging and ControlsVIN Range: N52048->N99999

Diagnosis and Testing

## Overview

There are changes to the engine management system (EMS) for 2006 my, the most obvious of which will be the change to 7-digit diagnostic trouble codes (DTCs) from the familiar 5-digit.

Refer to the DTC index in this section for guidance on how to use these codes with the Jaguar approved diagnostic system or a scan tool.

## Inspection and Verification

1. **1.** Verify the customer concern.
2. **2.** Visually inspect for obvious signs of mechanical or electrical damage.

**Visual inspection**

| Mechanical | Electrical |
|---|---|
| • Fuel leaks<br>• Damaged fuel lines<br>• Damaged push connect fittings<br>• Fuel level<br>• Fuel contamination/grade/quality<br>• Throttle body<br>• Damaged fuel tank filler pipe cap<br>• Damaged fuel tank filler pipe | • Fuses<br>• Inertia switch<br>• Loose or corroded electrical connectors<br>• Harnesses<br>• Sensor(s)<br>• Engine control module (ECM) |

3. **3.** If an obvious cause for an observed or reported concern is found, correct the cause (if possible) before proceeding to the next step.
4. **4.** If the cause is not visually evident use the Jaguar approved diagnostic system or a scan tool to retrieve the fault codes before proceeding to the diagnostic trouble code (DTC) index.

## Symptom Chart

| Symptom | Possible source | Action |
|---|---|---|
| Engine cranks, but does not fire | • Engine breather system disconnected/restricted<br>• Ignition system<br>• Fuel system<br>• Harness<br>• Crankshaft position (CKP) sensor<br>• ECM fault | Check the engine breather system,<br>REFER to: Engine Emission Control - VIN Range: N80181->R99999 (303-08A Engine Emission Control - V8 4.2L Petrol/V8 S/C 4.2L Petrol/2.5L NA V6 - AJV6/3.0L NA V6 - AJ27, Diagnosis and Testing).<br>For ignition system tests,<br>REFER to: Engine Ignition - VIN Range: N52048->N99999 (303-07A Engine Ignition - 2.5L NA V6 - AJV6/3.0L NA V6 - AJ27, Diagnosis and Testing).<br>Check the fuel pressure,<br>REFER to: Fuel Tank and Lines - V8 4.2L Petrol/V8 S/C 4.2L Petrol/2.5L NA V6 - AJV6/3.0L NA V6 - AJ27, VIN Range: N80181->R99999 (310-01 Fuel Tank and Lines, Diagnosis and Testing).<br>For CKP tests,<br>REFER to: Electronic Engine Controls - VIN Range: N80181->R99999 (303-14A Electronic Engine Controls - 2.5L NA V6 - AJV6/3.0L NA V6 - AJ27, Diagnosis and Testing).<br>Refer to the warranty policy and procedures manual if an ECM is suspect. |
| Engine cranks and fires, but will not start | • Evaporative emissions purge valve<br>• Fuel pump<br>• Spark plugs<br>• HT short circuit to ground (tracking) check rubber boots for cracks/damage<br>• Ignition coil failure(s)<br>• Harness | For purge valve tests,<br>REFER to: Evaporative Emissions - VIN Range: N52048->N99999 (303-13 Evaporative Emissions, Diagnosis and Testing).<br>Check the fuel pressure,<br>REFER to: Fuel Tank and Lines - V8 4.2L Petrol/V8 S/C 4.2L Petrol/2.5L NA V6 - AJV6/3.0L NA V6 - AJ27, VIN Range: N80181->R99999 (310-01 Fuel Tank and Lines, Diagnosis and Testing).<br>For ignition system tests,<br>REFER to: Engine Ignition - VIN Range: N52048->N99999 (303-07A Engine Ignition - 2.5L NA V6 - AJV6/3.0L NA V6 - AJ27, Diagnosis and Testing). |
| Difficult to start cold | • Check coolant anti-freeze content<br>• Battery<br>• CKP sensor<br>• Exhaust gas recirculation (EGR) valve stuck open<br>• Fuel pump<br>• Purge valve | Check the engine coolant level and condition. For battery information,<br>REFER to: Battery (414-01 Battery, Mounting and Cables, Diagnosis and Testing).<br>For CKP sensor tests,<br>REFER to: Electronic Engine Controls - VIN Range: N80181->R99999 (303-14A Electronic Engine Controls - 2.5L NA V6 - AJV6/3.0L NA V6 - AJ27, Diagnosis and Testing).<br>For EGR system information,<br>REFER to: Engine Emission Control - VIN Range: N80181->R99999 (303-08A Engine Emission Control - V8 4.2L Petrol/V8 S/C 4.2L Petrol/2.5L NA V6 - AJV6/3.0L NA V6 - AJ27, Diagnosis and Testing).<br>Check the fuel pressure,<br>REFER to: Fuel Tank and Lines - V8 4.2L Petrol/V8 S/C 4.2L Petrol/2.5L NA V6 - AJV6/3.0L NA V6 - AJ27, VIN Range: N80181->R99999 (310-01 Fuel Tank and Lines, Diagnosis and Testing). |

GETtheMANUAL.com

| Symptom | Possible source | Action |
|---|---|---|
| | | For purge valve tests,<br>REFER to: Evaporative Emissions - VIN Range: N52048->N99999 (303-13 Evaporative Emissions, Diagnosis and Testing). |
| Difficult to start hot | • Injector leak<br>• Engine fuel temperature (EFT) sensor<br>• Intake air temperature (IAT) sensor<br>• Mass air flow (MAF) sensor<br>• Purge valve<br>• Fuel pump<br>• Ignition system<br>• EGR valve stuck open | For fuel injector information,<br>REFER to: Fuel Injectors (303-04A Fuel Charging and Controls - 2.5L NA V6 - AJV6/3.0L NA V6 - AJ27, Removal and Installation).<br>For EFT, IAT and MAF sensor tests,<br>REFER to: Electronic Engine Controls - VIN Range: N80181->R99999 (303-14A Electronic Engine Controls - 2.5L NA V6 - AJV6/3.0L NA V6 - AJ27, Diagnosis and Testing).<br>For purge valve tests,<br>REFER to: Evaporative Emissions - VIN Range: N52048->N99999 (303-13 Evaporative Emissions, Diagnosis and Testing).<br>Check the fuel pressure,<br>REFER to: Fuel Tank and Lines - V8 4.2L Petrol/V8 S/C 4.2L Petrol/2.5L NA V6 - AJV6/3.0L NA V6 - AJ27, VIN Range: N80181->R99999 (310-01 Fuel Tank and Lines, Diagnosis and Testing).<br>For ignition system tests,<br>REFER to: Engine Ignition - VIN Range: N52048->N99999 (303-07A Engine Ignition - 2.5L NA V6 - AJV6/3.0L NA V6 - AJ27, Diagnosis and Testing).<br>For EGR system information,<br>REFER to: Engine Emission Control - VIN Range: N80181->R99999 (303-08A Engine Emission Control - V8 4.2L Petrol/V8 S/C 4.2L Petrol/2.5L NA V6 - AJV6/3.0L NA V6 - AJ27, Diagnosis and Testing). |
| Difficult to start after hot soak (vehicle standing after engine has reached operating temperature) | • Injector leak<br>• EFT sensor<br>• IAT sensor<br>• MAF sensor<br>• Purge valve<br>• Fuel pump<br>• Ignition system<br>• EGR valve stuck open | For fuel injector information,<br>REFER to: Fuel Injectors (303-04A Fuel Charging and Controls - 2.5L NA V6 - AJV6/3.0L NA V6 - AJ27, Removal and Installation).<br>For EFT, IAT and MAF sensor tests,<br>REFER to: Electronic Engine Controls - VIN Range: N80181->R99999 (303-14A Electronic Engine Controls - 2.5L NA V6 - AJV6/3.0L NA V6 - AJ27, Diagnosis and Testing).<br>For purge valve tests,<br>REFER to: Evaporative Emissions - VIN Range: N52048->N99999 (303-13 Evaporative Emissions, Diagnosis and Testing).<br>Check the fuel pressure,<br>REFER to: Fuel Tank and Lines - V8 4.2L Petrol/V8 S/C 4.2L Petrol/2.5L NA V6 - AJV6/3.0L NA V6 - AJ27, VIN Range: N80181->R99999 (310-01 Fuel Tank and Lines, Diagnosis and Testing).<br>For ignition system tests,<br>REFER to: Engine Ignition - VIN Range: N52048->N99999 (303-07A Engine Ignition - 2.5L NA V6 - AJV6/3.0L NA V6 - AJ27, Diagnosis and Testing).<br>For EGR system information,<br>REFER to: Engine Emission Control - VIN Range: N80181->R99999 (303-08A Engine Emission Control - V8 4.2L Petrol/V8 S/C 4.2L Petrol/2.5L NA V6 - AJV6/3.0L NA V6 - AJ27, Diagnosis and Testing). |
| Engine stalls soon after start | • Breather system disconnected/restricted<br>• ECM relay<br>• Harness<br>• MAF sensor<br>• Fuel rail pressure (FRP) sensor<br>• Ignition system<br>• Fuel lines<br>• Air filter restricted<br>• Air leakage | For breather system information,<br>REFER to: Engine Emission Control - VIN Range: N80181->R99999 (303-08A Engine Emission Control - V8 4.2L Petrol/V8 S/C 4.2L Petrol/2.5L NA V6 - AJV6/3.0L NA V6 - AJ27, Diagnosis and Testing).<br>For ECM relay, MAF and FRP sensor tests,<br>REFER to: Electronic Engine Controls - VIN Range: N80181->R99999 (303-14A Electronic Engine Controls - 2.5L NA V6 - AJV6/3.0L NA V6 - AJ27, Diagnosis and Testing).<br>For ignition system tests,<br>REFER to: Engine Ignition - VIN Range: N52048->N99999 (303-07A Engine Ignition - 2.5L NA V6 - AJV6/3.0L NA V6 - AJ27, Diagnosis and Testing).<br>Check the fuel lines,<br>REFER to: Fuel Tank and Lines - V8 4.2L Petrol/V8 S/C 4.2L Petrol/2.5L NA V6 - AJV6/3.0L NA V6 - AJ27, VIN Range: N80181->R99999 (310-01 Fuel Tank and Lines, Diagnosis and Testing).<br>For air filter and intake system information,<br>REFER to: Intake Air Distribution and Filtering - VIN Range: N52048->N99999 (303-12A Intake Air Distribution and Filtering - 2.5L NA V6 - AJV6/3.0L NA V6 - AJ27, Diagnosis and Testing). |
| Engine hesitates/poor acceleration | • Fuel pump<br>• Injector leak<br>• Fuel pressure<br>• Fuel lines<br>• Air leakage<br>• Throttle position (TP) sensors<br>• Throttle motor<br>• Ignition system<br>• EGR valve stuck open<br>• HO2 sensors<br>• Transmission malfunction<br>• Restricted pedal travel (carpet, | Check the fuel pressure, check the fuel lines,<br>REFER to: Fuel Tank and Lines - V8 4.2L Petrol/V8 S/C 4.2L Petrol/2.5L NA V6 - AJV6/3.0L NA V6 - AJ27, VIN Range: N80181->R99999 (310-01 Fuel Tank and Lines, Diagnosis and Testing).<br>For intake system,<br>REFER to: Intake Air Distribution and Filtering - VIN Range: N52048->N99999 (303-12A Intake Air Distribution and Filtering - 2.5L NA V6 - AJV6/3.0L NA V6 - AJ27, Diagnosis and Testing).<br>For TP sensor and throttle motor tests,<br>REFER to: Electronic Engine Controls - VIN Range: |

GETtheMANUALS.org

| Symptom | Possible source | Action |
|---|---|---|
| | etc)<br>● Accelerator pedal position (APP) sensor | N80181->R99999 (303-14A Electronic Engine Controls - 2.5L NA V6 - AJV6/3.0L NA V6 - AJ27, Diagnosis and Testing).<br>For ignition system tests,<br>REFER to: Engine Ignition - VIN Range: N52048->N99999 (303-07A Engine Ignition - 2.5L NA V6 - AJV6/3.0L NA V6 - AJ27, Diagnosis and Testing).<br>For EGR system information,<br>REFER to: Engine Emission Control - VIN Range: N80181->R99999 (303-08A Engine Emission Control - V8 4.2L Petrol/V8 S/C 4.2L Petrol/2.5L NA V6 - AJV6/3.0L NA V6 - AJ27, Diagnosis and Testing).<br>Check for DTCs indicating a faulty HO2 sensor. Refer to the DTC index. For transmission information,<br>REFER to: Diagnostic Strategy - VIN Range: N52048->N99999 (307-01 Automatic Transmission/Transaxle, Diagnosis and Testing).<br>Check the accelerator pedal travel. For APP sensor tests,<br>REFER to: Electronic Engine Controls - VIN Range: N80181->R99999 (303-14A Electronic Engine Controls - 2.5L NA V6 - AJV6/3.0L NA V6 - AJ27, Diagnosis and Testing). |
| Engine backfires | ● Fuel pump<br>● Fuel lines<br>● Air leakage<br>● MAF sensor<br>● HO2 sensors<br>● Ignition system<br>● Sticking variable camshaft timing (VCT) hub<br>● APP sensor | Check the fuel pressure, check the fuel lines,<br>REFER to: Fuel Tank and Lines - V8 4.2L Petrol/V8 S/C 4.2L Petrol/2.5L NA V6 - AJV6/3.0L NA V6 - AJ27, VIN Range: N80181->R99999 (310-01 Fuel Tank and Lines, Diagnosis and Testing).<br>For intake system,<br>REFER to: Intake Air Distribution and Filtering - VIN Range: N52048->N99999 (303-12A Intake Air Distribution and Filtering - 2.5L NA V6 - AJV6/3.0L NA V6 - AJ27, Diagnosis and Testing).<br>For MAF sensor tests,<br>REFER to: Electronic Engine Controls - VIN Range: N80181->R99999 (303-14A Electronic Engine Controls - 2.5L NA V6 - AJV6/3.0L NA V6 - AJ27, Diagnosis and Testing).<br>Check for DTCs indicating a faulty HO2 sensor. Refer to the DTC index. For ignition system tests,<br>REFER to: Engine Ignition - VIN Range: N52048->N99999 (303-07A Engine Ignition - 2.5L NA V6 - AJV6/3.0L NA V6 - AJ27, Diagnosis and Testing).<br>Check DTCs for VCT range/performance fault. For VCT tests,<br>REFER to: Electronic Engine Controls - VIN Range: N80181->R99999 (303-14A Electronic Engine Controls - 2.5L NA V6 - AJV6/3.0L NA V6 - AJ27, Diagnosis and Testing).<br>For APP sensor tests,<br>REFER to: Electronic Engine Controls - VIN Range: N80181->R99999 (303-14A Electronic Engine Controls - 2.5L NA V6 - AJV6/3.0L NA V6 - AJ27, Diagnosis and Testing). |
| Engine surges | ● Fuel pump<br>● Fuel lines<br>● MAF sensor<br>● Harness<br>● TP sensors<br>● Throttle motor<br>● Ignition system | Check the fuel pressure, check the fuel lines,<br>REFER to: Fuel Tank and Lines - V8 4.2L Petrol/V8 S/C 4.2L Petrol/2.5L NA V6 - AJV6/3.0L NA V6 - AJ27, VIN Range: N80181->R99999 (310-01 Fuel Tank and Lines, Diagnosis and Testing).<br>For MAF, TP sensor, and throttle motor tests,<br>REFER to: Electronic Engine Controls - VIN Range: N80181->R99999 (303-14A Electronic Engine Controls - 2.5L NA V6 - AJV6/3.0L NA V6 - AJ27, Diagnosis and Testing).<br>For ignition system tests,<br>REFER to: Engine Ignition - VIN Range: N52048->N99999 (303-07A Engine Ignition - 2.5L NA V6 - AJV6/3.0L NA V6 - AJ27, Diagnosis and Testing). |
| Engine detonates/knocks | ● Knock sensor (KS) circuit malfunction<br>● FRP sensor<br>● MAF sensor<br>● HO2 sensors<br>● Fuel pump<br>● Fuel lines<br>● Air leakage<br>● Sticking VCT hub<br>● BARO sensor malfunction (internal ECM fault) | For KS, FRP, MAF and HO2 sensor tests,<br>REFER to: Electronic Engine Controls - VIN Range: N80181->R99999 (303-14A Electronic Engine Controls - 2.5L NA V6 - AJV6/3.0L NA V6 - AJ27, Diagnosis and Testing).<br>Check the fuel pressure, check the fuel lines,<br>REFER to: Fuel Tank and Lines - V8 4.2L Petrol/V8 S/C 4.2L Petrol/2.5L NA V6 - AJV6/3.0L NA V6 - AJ27, VIN Range: N80181->R99999 (310-01 Fuel Tank and Lines, Diagnosis and Testing).<br>For intake system,<br>REFER to: Intake Air Distribution and Filtering - VIN Range: N52048->N99999 (303-12A Intake Air Distribution and Filtering - 2.5L NA V6 - AJV6/3.0L NA V6 - AJ27, Diagnosis and Testing).<br>Check DTCs for VCT range/performance fault. For VCT tests,<br>REFER to: Electronic Engine Controls - VIN Range: N80181->R99999 (303-14A Electronic Engine Controls - 2.5L NA V6 - AJV6/3.0L NA V6 - AJ27, Diagnosis and Testing).<br>Refer to the warranty policy and procedures manual if an ECM is suspect. |
| No throttle response | ● APP sensor malfunction<br>● TP sensors<br>● Throttle motor | For APP, TP sensor and throttle motor tests,<br>REFER to: Electronic Engine Controls - VIN Range: N80181->R99999 (303-14A Electronic Engine Controls - 2.5L NA V6 - AJV6/3.0L NA V6 - AJ27, Diagnosis and Testing). |
| Poor throttle response | ● APP sensor malfunction<br>● TP sensors<br>● ECT sensor<br>● MAF sensor<br>● Transmission malfunction<br>● Traction control event<br>● Air leakage | For APP, TP, ECT and MAF sensor tests,<br>REFER to: Electronic Engine Controls - VIN Range: N80181->R99999 (303-14A Electronic Engine Controls - 2.5L NA V6 - AJV6/3.0L NA V6 - AJ27, Diagnosis and Testing).<br>For transmission information,<br>REFER to: Diagnostic Strategy - VIN Range: N52048->N99999 (307-01 Automatic Transmission/Transaxle, Diagnosis and |

GETTHEMANUALS.ORG

| Symptom | Possible source | Action |
|---|---|---|
| | • Breather system disconnected/restricted | Testing).<br>For intake system,<br>REFER to: Intake Air Distribution and Filtering - VIN Range: N52048->N99999 (303-12A Intake Air Distribution and Filtering - 2.5L NA V6 - AJV6/3.0L NA V6 - AJ27, Diagnosis and Testing).<br>For breather system information,<br>REFER to: Engine Emission Control - VIN Range: N80181->R99999 (303-08A Engine Emission Control - V8 4.2L Petrol/V8 S/C 4.2L Petrol/2.5L NA V6 - AJV6/3.0L NA V6 - AJ27, Diagnosis and Testing). |

## Diagnostic trouble code (DTC) index

• NOTE: Generic scan tools may not read the codes listed, or may read only 5-digit codes. Match the 5 digits from the scan tool to the first 5 digits of the 7-digit code listed to identify the fault (the last 2 digits give extra information read by the manufacturer-approved diagnostic system).

| DTC | Description | Possible Causes | Action |
|---|---|---|---|
| P008700 | Fuel rail/system pressure - too low | • FRP sensor disconnected<br>• FRP sensor to ECM sensing circuit: open circuit or short circuit to ground<br>• FRP sensor supply circuit: high resistance<br>• FRP sensor failure<br>• Fuel pump failure<br>• Fuel line leak<br>• Restricted fuel line | For FRP sensor circuit tests,<br>REFER to: Electronic Engine Controls - VIN Range: N80181->R99999 (303-14A Electronic Engine Controls - 2.5L NA V6 - AJV6/3.0L NA V6 - AJ27, Diagnosis and Testing).<br>For fuel pump circuit and fuel line tests,<br>REFER to: Fuel Tank and Lines - V8 4.2L Petrol/V8 S/C 4.2L Petrol/2.5L NA V6 - AJV6/3.0L NA V6 - AJ27, VIN Range: N80181->R99999 (310-01 Fuel Tank and Lines, Diagnosis and Testing). |
| P008800 | Fuel rail/system pressure - too high | • FRP sensor to ECM wiring (supply/sense): short circuit to each other<br>• FRP sensor to ECM sense circuit: short circuit to high voltage<br>• FRP sensor ground circuit: high resistance<br>• FRP sensor failure<br>• Restricted fuel line<br>• Fuel pump short circuit to battery | For FRP sensor tests,<br>REFER to: Electronic Engine Controls - VIN Range: N80181->R99999 (303-14A Electronic Engine Controls - 2.5L NA V6 - AJV6/3.0L NA V6 - AJ27, Diagnosis and Testing).<br>For fuel pump circuit and fuel line tests,<br>REFER to: Fuel Tank and Lines - V8 4.2L Petrol/V8 S/C 4.2L Petrol/2.5L NA V6 - AJV6/3.0L NA V6 - AJ27, VIN Range: N80181->R99999 (310-01 Fuel Tank and Lines, Diagnosis and Testing). |
| P017100 | System too lean (right hand bank) | • Air intake leak between MAF sensor and cylinder head<br>• Fuel filter/system restriction<br>• Low fuel pressure<br>• Fuel injector restriction<br>• MAF sensor fault (low intake air flow)<br>• Exhaust leak (before catalyst)<br>• Evaporative emission system fault | For intake system information,<br>REFER to: Intake Air Distribution and Filtering - VIN Range: N52048->N99999 (303-12A Intake Air Distribution and Filtering - 2.5L NA V6 - AJV6/3.0L NA V6 - AJ27, Diagnosis and Testing).<br>Check the fuel pressure, check the fuel lines,<br>REFER to: Fuel Tank and Lines - V8 4.2L Petrol/V8 S/C 4.2L Petrol/2.5L NA V6 - AJV6/3.0L NA V6 - AJ27, VIN Range: N80181->R99999 (310-01 Fuel Tank and Lines, Diagnosis and Testing).<br>For fuel injector information,<br>REFER to: Fuel Injectors (303-04A Fuel Charging and Controls - 2.5L NA V6 - AJV6/3.0L NA V6 - AJ27, Removal and Installation).<br>For MAF sensor circuit tests,<br>REFER to: Electronic Engine Controls - VIN Range: N80181->R99999 (303-14A Electronic Engine Controls - 2.5L NA V6 - AJV6/3.0L NA V6 - AJ27, Diagnosis and Testing).<br>Check the exhaust system (before catalyst) for condition and security,<br>REFER to: Exhaust System - VIN Range: N13089->N99999 (309-00 Exhaust System, Diagnosis and Testing).<br>For evaporative emission system tests,<br>REFER to: Evaporative Emissions - VIN Range: N52048->N99999 (303-13 Evaporative Emissions, Diagnosis and Testing). |
| P017200 | System too rich (right hand bank) | • Restricted air filter<br>• High fuel pressure<br>• Leaking fuel injector(s)<br>• Oil contaminated with fuel (too many cold starts with vehicle subsequently not getting hot enough for long enough)<br>• MAF sensor fault (high intake air flow)<br>• Evaporative emission system fault | For intake system information,<br>REFER to: Intake Air Distribution and Filtering - VIN Range: N52048->N99999 (303-12A Intake Air Distribution and Filtering - 2.5L NA V6 - AJV6/3.0L NA V6 - AJ27, Diagnosis and Testing).<br>Check the fuel pressure,<br>REFER to: Fuel Tank and Lines - V8 4.2L Petrol/V8 S/C 4.2L Petrol/2.5L NA V6 - AJV6/3.0L NA V6 - AJ27, VIN Range: N80181->R99999 (310-01 Fuel Tank and Lines, Diagnosis and Testing).<br>For fuel injector information,<br>REFER to: Fuel Injectors (303-04A Fuel Charging and Controls - 2.5L NA V6 - AJV6/3.0L NA V6 - AJ27, Removal and Installation).<br>Check the oil condition, if contamination is present, renew the engine oil and filter. For MAF sensor circuit tests,<br>REFER to: Electronic Engine Controls - VIN Range: N80181->R99999 (303-14A Electronic Engine Controls - 2.5L NA V6 - AJV6/3.0L NA V6 - AJ27, Diagnosis and Testing).<br>For evaporative emission system tests,<br>REFER to: Evaporative Emissions - VIN Range: |

GETtheMANUALS.com

| DTC | Description | Possible Causes | Action |
|---|---|---|---|
| | | | N52048->N99999 (303-13 Evaporative Emissions, Diagnosis and Testing). |
| P017400 | System too lean (left hand bank) | • Air intake leak between MAF sensor and cylinder head<br>• Fuel filter/system restriction<br>• Low fuel pressure<br>• Fuel injector restriction<br>• MAF sensor fault (low intake air flow)<br>• Exhaust leak (before catalyst)<br>• Evaporative emission system fault | For intake system information,<br>REFER to: Intake Air Distribution and Filtering - VIN Range: N52048->N99999 (303-12A Intake Air Distribution and Filtering - 2.5L NA V6 - AJV6/3.0L NA V6 - AJ27, Diagnosis and Testing).<br>Check the fuel pressure, check the fuel lines,<br>REFER to: Fuel Tank and Lines - V8 4.2L Petrol/V8 S/C 4.2L Petrol/2.5L NA V6 - AJV6/3.0L NA V6 - AJ27, VIN Range: N80181->R99999 (310-01 Fuel Tank and Lines, Diagnosis and Testing).<br>For fuel injector information,<br>REFER to: Fuel Injectors (303-04A Fuel Charging and Controls - 2.5L NA V6 - AJV6/3.0L NA V6 - AJ27, Removal and Installation).<br>For MAF sensor circuit tests,<br>REFER to: Electronic Engine Controls - VIN Range: N80181->R99999 (303-14A Electronic Engine Controls - 2.5L NA V6 - AJV6/3.0L NA V6 - AJ27, Diagnosis and Testing).<br>Check the exhaust system (before catalyst) for condition and security,<br>REFER to: Exhaust System - VIN Range: N13089->N99999 (309-00 Exhaust System, Diagnosis and Testing).<br>For evaporative emission system tests,<br>REFER to: Evaporative Emissions - VIN Range: N52048->N99999 (303-13 Evaporative Emissions, Diagnosis and Testing). |
| P017500 | System too rich (left hand bank) | • Restricted air filter<br>• High fuel pressure<br>• Leaking fuel injector(s)<br>• Oil contaminated with fuel (too many cold starts with vehicle subsequently not getting hot enough for long enough)<br>• MAF sensor fault (high intake air flow)<br>• Evaporative emission system fault | For intake system information,<br>REFER to: Intake Air Distribution and Filtering - VIN Range: N52048->N99999 (303-12A Intake Air Distribution and Filtering - 2.5L NA V6 - AJV6/3.0L NA V6 - AJ27, Diagnosis and Testing).<br>Check the fuel pressure,<br>REFER to: Fuel Tank and Lines - V8 4.2L Petrol/V8 S/C 4.2L Petrol/2.5L NA V6 - AJV6/3.0L NA V6 - AJ27, VIN Range: N80181->R99999 (310-01 Fuel Tank and Lines, Diagnosis and Testing).<br>For fuel injector information,<br>REFER to: Fuel Injectors (303-04A Fuel Charging and Controls - 2.5L NA V6 - AJV6/3.0L NA V6 - AJ27, Removal and Installation).<br>Check the oil condition, if contamination is present, renew the engine oil and filter. For MAF sensor circuit tests,<br>REFER to: Electronic Engine Controls - VIN Range: N80181->R99999 (303-14A Electronic Engine Controls - 2.5L NA V6 - AJV6/3.0L NA V6 - AJ27, Diagnosis and Testing).<br>For evaporative emission system tests,<br>REFER to: Evaporative Emissions - VIN Range: N52048->N99999 (303-13 Evaporative Emissions, Diagnosis and Testing). |
| P020100 | Cylinder 1 injector circuit/open | • Injector disconnected<br>• Injector harness wiring: short circuit<br>• Injector failure | For injector circuit tests, GO to Pinpoint Test A. |
| P020200 | Cylinder 2 injector circuit/open | • Injector disconnected<br>• Injector harness wiring: short circuit<br>• Injector failure | For injector circuit tests, GO to Pinpoint Test A. |
| P020300 | Cylinder 3 injector circuit/open | • Injector disconnected<br>• Injector harness wiring: short circuit<br>• Injector failure | For injector circuit tests, GO to Pinpoint Test A. |
| P020400 | Cylinder 4 injector circuit/open | • Injector disconnected<br>• Injector harness wiring: short circuit<br>• Injector failure | For injector circuit tests, GO to Pinpoint Test A. |
| P020500 | Cylinder 5 injector circuit/open | • Injector disconnected<br>• Injector harness wiring: short circuit<br>• Injector failure | For injector circuit tests, GO to Pinpoint Test A. |
| P020600 | Cylinder 6 injector circuit/open | • Injector disconnected<br>• Injector harness wiring: short circuit<br>• Injector failure | For injector circuit tests, GO to Pinpoint Test A. |
| P131500 | Persistent misfire | • ECM to ignition coil primary circuit fault (cylinder misfire detected DTC also flagged)<br>• Fuel delivery pressure low<br>• Fuel injector circuit fault(s) (injector DTCs also flagged)<br>• Ignition coil failure<br>• Spark plug failure/fouled/incorrect gap<br>• Cylinder compression low | For ignition coil circuit tests,<br>REFER to: Engine Ignition - VIN Range: N52048->N99999 (303-07A Engine Ignition - 2.5L NA V6 - AJV6/3.0L NA V6 - AJ27, Diagnosis and Testing).<br>Check the fuel pressure,<br>REFER to: Fuel Tank and Lines - V8 4.2L Petrol/V8 S/C 4.2L Petrol/2.5L NA V6 - AJV6/3.0L NA V6 - AJ27, VIN Range: N80181->R99999 (310-01 Fuel Tank and Lines, Diagnosis and Testing).<br>For injector circuit tests, GO to Pinpoint Test A. For ignition coil and spark plug tests,<br>REFER to: Engine Ignition - VIN Range: |

GETtheMANUALS.com

| DTC | Description | Possible Causes | Action |
|---|---|---|---|
| | | | N52048->N99999 (303-07A Engine Ignition - 2.5L NA V6 - AJV6/3.0L NA V6 - AJ27, Diagnosis and Testing). Check the cylinder compressions. |
| P131600 | Injector driver misfire - emissions damage | • Injector driver module codes detected | Check for associated DTCs and refer to the DTC index. |
| P210129 | Throttle range performance - sub-processor | • Jammed throttle blade, gearing or motor | Check for a message in the instrument cluster. Replace the throttle body. REFER to: Throttle Body - VIN Range: N52048->N99999 (303-04A Fuel Charging and Controls - 2.5L NA V6 - AJV6/3.0L NA V6 - AJ27, Removal and Installation). |
| P210164 | Throttle range performance | • Jammed throttle blade, gearing or motor | Check for a message in the instrument cluster. Replace the throttle body. REFER to: Throttle Body - VIN Range: N52048->N99999 (303-04A Fuel Charging and Controls - 2.5L NA V6 - AJV6/3.0L NA V6 - AJ27, Removal and Installation). |
| P210329 | Throttle actuator motor control circuit high | • Control circuit: short circuit to power<br>• ECM fault | For throttle actuator motor circuit tests, GO to Pinpoint Test B. Refer to the warranty policy and procedures manual if an ECM is suspect. |
| P210364 | Throttle actuator motor control circuit high - signal plausibility failure | • Control circuit: short circuit to power<br>• ECM fault | For throttle actuator motor circuit tests, GO to Pinpoint Test B. Refer to the warranty policy and procedures manual if an ECM is suspect. |
| P210500 | Throttle actuator control system - forced engine shutdown | • Throttle MIL request due to fuel cut | Check for DTCs indicating the reason for the fuel cut. Follow the action indicated for those DTCs. |
| P210629 | Throttle actuator control system - forced limited power | • Signal invalid | Check for a message in the instrument cluster. Replace the throttle body. REFER to: Throttle Body - VIN Range: N52048->N99999 (303-04A Fuel Charging and Controls - 2.5L NA V6 - AJV6/3.0L NA V6 - AJ27, Removal and Installation). |
| P210664 | Throttle actuator control system - forced limited power | • Signal plausibility failure | Check for a message in the instrument cluster. Replace the throttle body. REFER to: Throttle Body - VIN Range: N52048->N99999 (303-04A Fuel Charging and Controls - 2.5L NA V6 - AJV6/3.0L NA V6 - AJ27, Removal and Installation). |
| P211800 | Throttle actuator motor control current range/performance | • Control circuit: short circuit to power, short circuit to ground, high resistance<br>• ECM fault | For throttle actuator motor circuit tests, GO to Pinpoint Test B. Refer to the warranty policy and procedures manual if an ECM is suspect. |
| P211900 | Throttle actuator control throttle body range/performance | • Throttle spring faulty | Check for a message in the instrument cluster. Replace the throttle body. REFER to: Throttle Body - VIN Range: N52048->N99999 (303-04A Fuel Charging and Controls - 2.5L NA V6 - AJV6/3.0L NA V6 - AJ27, Removal and Installation). |

## Pinpoint Tests

CAUTION: When probing connectors to take measurements in the course of the pinpoint tests, use the adaptor kit, part number 3548-1358-00.

• NOTE: When performing electrical voltage or resistance tests, always use a digital multimeter (DMM) accurate to 3 decimal places, and with an up-to-date calibration certificate. When testing resistance, always take the resistance of the DMM leads into account.

• NOTE: Check and rectify basic faults before beginning diagnostic routines involving pinpoint tests.

### PINPOINT TEST A : FUEL INJECTORS

• NOTE: The DTC set will indicate which cylinder injector or circuit is faulty. Only in the event of multiple cylinder misfires will it be necessary to check more than one injector or circuit, in which case, multiple DTCs will be set.

| TEST CONDITIONS | DETAILS/RESULTS/ACTIONS |
|---|---|
| **A1: CHECK THE INJECTOR COIL RESISTANCE** | |
| | 1 Disconnect the relevant injector electrical connector: |

| Injector connector |
|---|
| Cylinder 1, IL03 |
| Cylinder 2, IL06 |
| Cylinder 3, IL04 |
| Cylinder 4, IL07 |
| Cylinder 5, IL05 |
| Cylinder 6, IL08 |

2 Measure the resistance between the injector pins.

Is the resistance between 12 and 16 ohms?

**Yes**

GO to A2.

**No**

INSTALL a new injector.

REFER to: Fuel Injectors (303-04A Fuel Charging and Controls - 2.5L NA V6 - AJV6/3.0L NA V6 - AJ27, Removal and Installation).

CLEAR the DTC and test the system for normal operation.

**A2: CHECK THE INJECTOR COIL INSULATION**

1 Measure the resistance between:

| Injector, component side | Injector body |
|---|---|
| Pin 01 | Injector body |
| Pin 02 | Injector body |

GETtheMANUALS.org

Is either resistance less than 10,000 ohms?

**Yes**

INSTALL a new injector.
REFER to: Fuel Injectors (303-04A Fuel Charging and Controls - 2.5L NA V6 - AJV6/3.0L NA V6 - AJ27, Removal and Installation).
CLEAR the DTC and test the system for normal operation.

**No**

GO to A3.

**A3: CHECK THE INJECTOR SUPPLY VOLTAGE**

1. Key on, engine off.
2. Make sure the EMS relay is energized.
3. Measure the voltage between:

| Injector connector, harness side | Battery |
|---|---|
| Pin 02 | Negative terminal |

Is the voltage less than 10 Volts?

**Yes**

REPAIR the circuit between the relevant injector harness electrical connector pin 02 and battery. This circuit includes fuse 17 of the front power distribution box and the EMS relay. For additional information, refer to the wiring diagrams.
CLEAR the DTC and test the system for normal operation.

**No**

GO to A4.

**A4: CHECK THE INJECTOR CONTROL CIRCUIT FOR SHORT CIRCUIT TO GROUND**

1. Key off.
2. Measure the resistance between:

| Injector connector, harness side | Battery |
|---|---|
| Pin 01 | Negative terminal |

Is the resistance less than 10,000 ohms?

**Yes**

REPAIR the short circuit. For additional information, refer to the wiring diagrams. CLEAR the DTC and test the system for normal operation.

**No**

GO to A5.

**A5: CHECK THE INJECTOR CONTROL CIRCUIT FOR SHORT CIRCUIT TO POWER**

1. Measure the resistance between:

| Injector connector, harness side | Battery |
|---|---|
| Pin 01 | Positive terminal |

Is the resistance less than 10,000 ohms?

**Yes**

REPAIR the short circuit. For additional information, refer to the wiring diagrams. CLEAR the DTC and test the system for normal operation.

**No**

GO to A6.

**A6: CHECK THE INJECTOR CONTROL CIRCUIT FOR HIGH RESISTANCE**

• NOTE: The DTC set will indicate which cylinder injector or circuit is faulty. Only in the event of multiple cylinder misfires will it be necessary to check more than one injector or circuit, in which case, multiple DTCs will be set.

1. Disconnect the ECM electrical connector PI300.
2. Measure the resistance between:

| Cylinder 1 injector connector, harness side | ECM connector PI300, harness side |
|---|---|
| IL03, pin 01 | Pin 78 |
| **Cylinder 2 injector connector, harness side** | **ECM connector PI300, harness side** |
| IL06, pin 01 | Pin 79 |
| **Cylinder 3 injector connector, harness side** | **ECM connector PI300, harness side** |
| IL04, pin 01 | Pin 80 |
| **Cylinder 4 injector connector, harness side** | **ECM connector PI300, harness side** |
| IL07, pin 01 | Pin 81 |
| **Cylinder 5 injector connector, harness side** | **ECM connector PI300, harness side** |
| IL05, pin 01 | Pin 82 |
| **Cylinder 6 injector connector, harness side** | **ECM connector PI300, harness side** |
| IL08, pin 01 | Pin 83 |

Is the resistance greater than 5 ohms?

**Yes**

REPAIR the high resistance circuit. For additional information, refer to the wiring diagrams. CLEAR the DTC and test the system for normal operation.

**No**

INSTALL a new injector.
REFER to: Fuel Injectors (303-04A Fuel Charging and Controls - 2.5L NA V6 - AJV6/3.0L NA V6 - AJ27, Removal and Installation).
CLEAR the DTC and test the system for normal operation.

## PINPOINT TEST B : THROTTLE BODY

| TEST CONDITIONS | DETAILS/RESULTS/ACTIONS |
|---|---|

**B1: CHECK THE THROTTLE ACTUATOR CONTROL MOTOR SUPPLY CIRCUIT FOR SHORT CIRCUIT TO GROUND**

1. Disconnect the throttle body electrical connector, PI26.
2. Measure the resistance between:

| Throttle body connector PI26, harness side | Battery |
|---|---|
| Pin 02 | Negative terminal |

Is the resistance less than 10,000 ohms?

**Yes**

REPAIR the short circuit. For additional information, refer to the wiring diagrams. CLEAR the DTC and test the system for normal operation.

**No**

GO to B2.

GETtheMANUALS.org

**B2: CHECK THE THROTTLE ACTUATOR CONTROL MOTOR SUPPLY CIRCUIT FOR SHORT CIRCUIT TO POWER**

1 Measure the resistance between:

| Throttle body connector PI26, harness side | Battery |
|---|---|
| Pin 02 | Positive terminal |

Is the resistance less than 10,000 ohms?

**Yes**

REPAIR the short circuit. For additional information, refer to the wiring diagrams. CLEAR the DTC and test the system for normal operation.

**No**

GO to B3.

**B3: CHECK THE THROTTLE ACTUATOR CONTROL MOTOR NEGATIVE CIRCUIT FOR SHORT CIRCUIT TO GROUND**

1 Measure the resistance between:

| Throttle body connector PI26, harness side | Battery |
|---|---|
| Pin 01 | Negative terminal |

Is the resistance less than 10,000 ohms?

**Yes**

REPAIR the short circuit. For additional information, refer to the wiring diagrams. CLEAR the DTC and test the system for normal operation.

**No**

GO to B4.

**B4: CHECK THE THROTTLE ACTUATOR CONTROL MOTOR NEGATIVE CIRCUIT FOR SHORT CIRCUIT TO POWER**

1 Measure the resistance between:

| Throttle body connector PI26, harness side | Battery |
|---|---|
| Pin 01 | Positive terminal |

Is the resistance less than 10,000 ohms?

**Yes**

REPAIR the short circuit. For additional information, refer to the wiring diagrams. CLEAR the DTC and test the system for normal operation.

**No**

GO to B5.

**B5: CHECK THE THROTTLE ACTUATOR CONTROL MOTOR SUPPLY CIRCUIT FOR HIGH RESISTANCE**

1 Disconnect the ECM electrical connector, PI300.

2 Measure the resistance between:

| Throttle body connector PI26, harness side | ECM connector PI300, harness side |
|---|---|
| Pin 02 | Pin 75 |

Is the resistance greater than 5 ohms?

**Yes**

REPAIR the high resistance circuit. For additional information, refer to the wiring diagrams. CLEAR the DTC and test the system for normal operation.

**No**

GO to B6.

**B6: CHECK THE THROTTLE ACTUATOR CONTROL MOTOR NEGATIVE CIRCUIT FOR HIGH RESISTANCE**

1 Measure the resistance between:

| Throttle body connector PI26, harness side | ECM connector PI300, harness side |
|---|---|
| Pin 01 | Pin 74 |

Is the resistance greater than 5 ohms?

**Yes**

REPAIR the high resistance circuit. For additional information, refer to the wiring diagrams. CLEAR the DTC and test the system for normal operation.

**No**

INSTALL a new throttle body assembly.
REFER to: Throttle Body - VIN Range: N52048->N99999 (303-04A Fuel Charging and Controls - 2.5L NA V6 - AJV6/3.0L NA V6 - AJ27, Removal and Installation).
CLEAR the DTC and test the system for normal operation.

GETtheMANUALS.org

# Fuel Charging and Controls - 2.5L NA V6 - AJV6 / 3.0L NA V6 - AJ27 - Fuel Charging Wiring Harness

Removal and Installation

## Removal

1. Remove the intake manifold. For additional information, refer to Section 303-01A Engine / 303-01B Engine / 303-01C Engine.
2. Disconnect the spring lock coupling.
   For additional information, refer to Section 310-00 Fuel System - General Information.
3. Disconnect the fuel temperature sensor electrical connector.
   - Detach the fuel charging wiring harness.

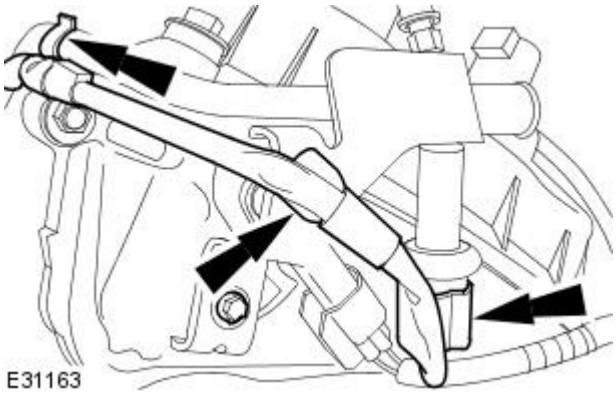


4. Disconnect the fuel pressure regulator connector.

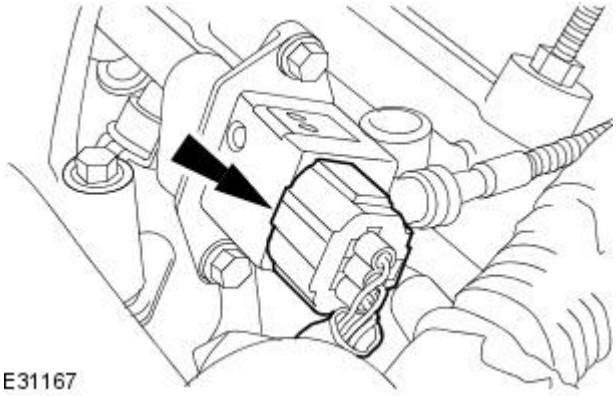


5. Detach the fuel pressure regulator vacuum line.

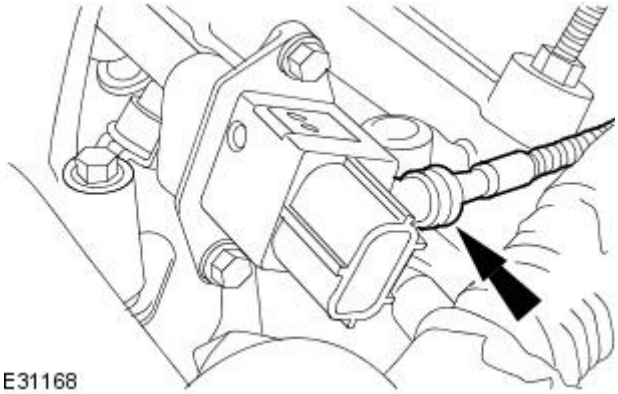


6. Disconnect the fuel charging wiring harness.

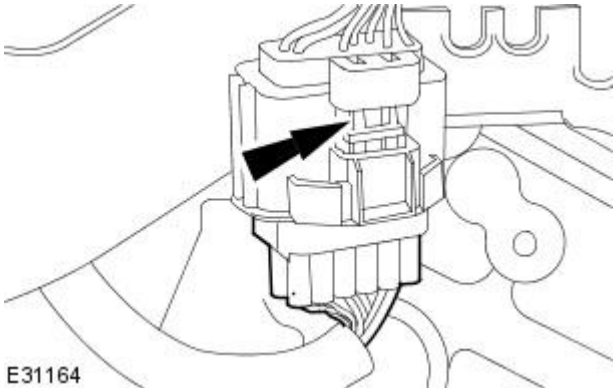


GETtheMANUALS.org

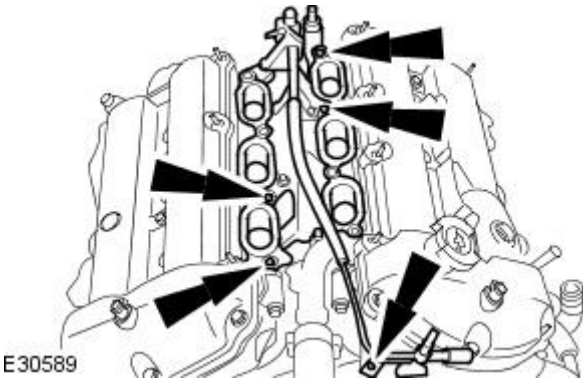


**7.** NOTE: Fuel may still be present in the fuel injection supply manifold.

Remove the fuel injection supply manifold, lower intake manifold and place to one side.

- Remove and discard the lower intake manifold O-ring seals.

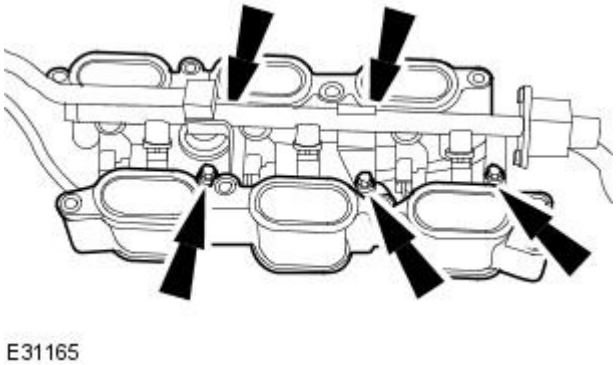


**8.** Remove the lower intake manifolds.

- Remove and discard the fuel injector O-ring seals.

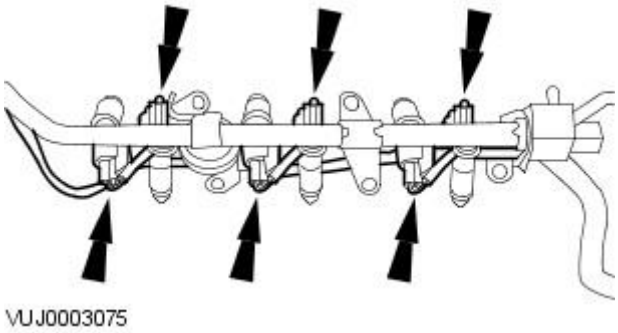


**9.** Disconnect the electrical connectors.

## Installation

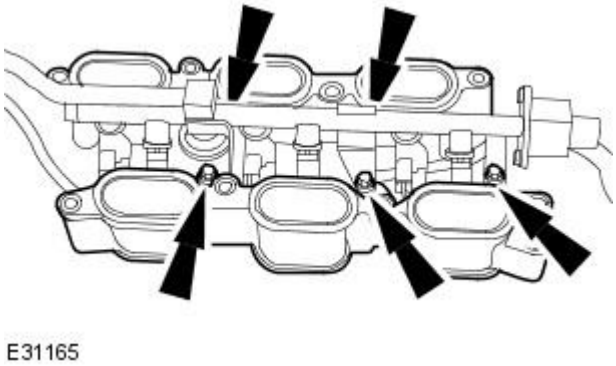


**1.** NOTE: Install new fuel injector O-ring seals.

• NOTE: Install new lower intake manifold O-ring seals.

To install, reverse the removal procedure.

- Tighten to 10 Nm.

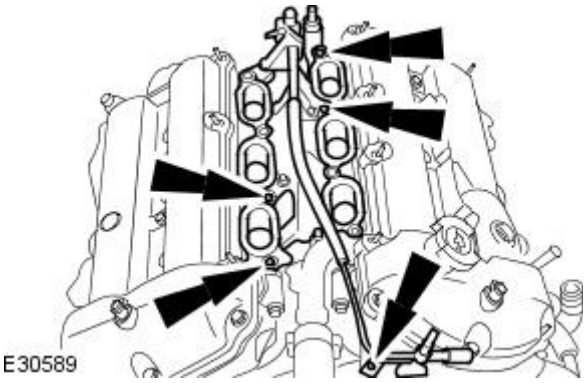


**2.** Tighten to 10 Nm.

GETtheMANUALS.org

# Fuel Charging and Controls - 2.5L NA V6 - AJV6 / 3.0L NA V6 - AJ27 - Fuel Injection Supply Manifold

Removal and Installation

## Removal

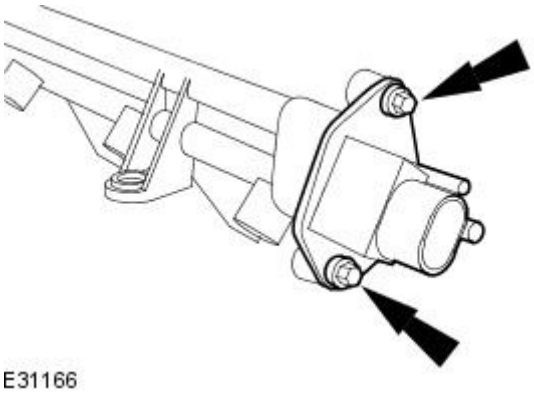


1. Remove the fuel injectors.
   For additional information, refer to Fuel Injectors in this section.
2. Remove the fuel pressure regulator.
   - Remove and discard the O-ring seals.

## Installation

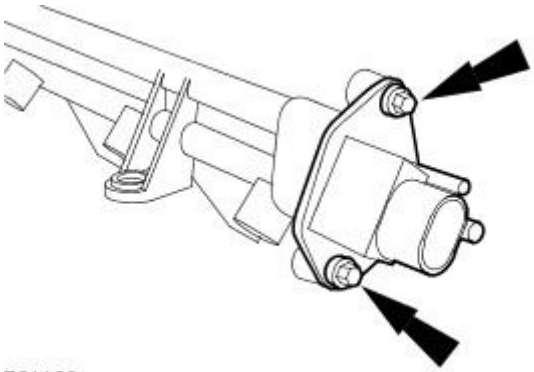


1. NOTE: Install new O-ring seals.

   To install, reverse the removal procedure.
   - Tighten to 10 Nm.

GETtheMANUALS.org

# Fuel Charging and Controls - 2.5L NA V6 - AJV6 / 3.0L NA V6 - AJ27 - Fuel Injectors

Removal and Installation

## Removal

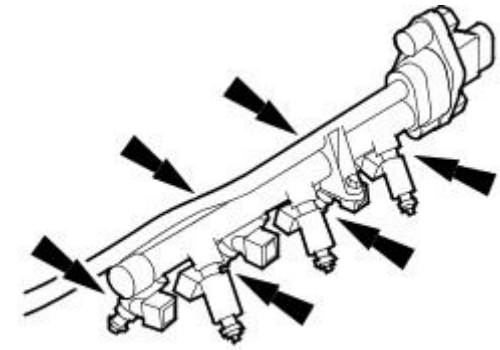

VUJ0003076

1. Remove the fuel charging wiring harness.
   For additional information, refer to Fuel Charging Wiring Harness in this section.
2. Remove the fuel injectors.
   - Remove the fuel injector locating clips.

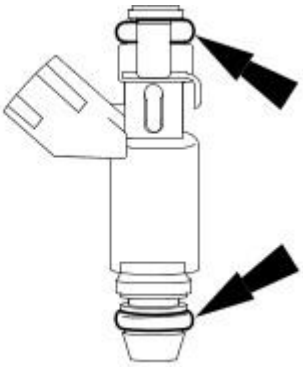

E31162

3. Remove and discard the O-ring seals.

## Installation

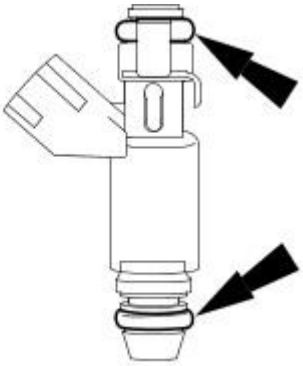

E31162

1. NOTE: Install new fuel injector O-ring seals.

To install, reverse the removal procedure.

- Lubricate the fuel injector O-ring seals with clean engine oil.

GETtheMANUALS.org

# Fuel Charging and Controls - 2.5L NA V6 - AJV6 / 3.0L NA V6 - AJ27 - Fuel Pressure Regulator

Removal and Installation

## Removal

1. Depressurize the fuel system.
   For additional information, refer to Section 310-00 Fuel System - General Information.
2. Remove the fuel pressure regulator bracket retaining bolt.

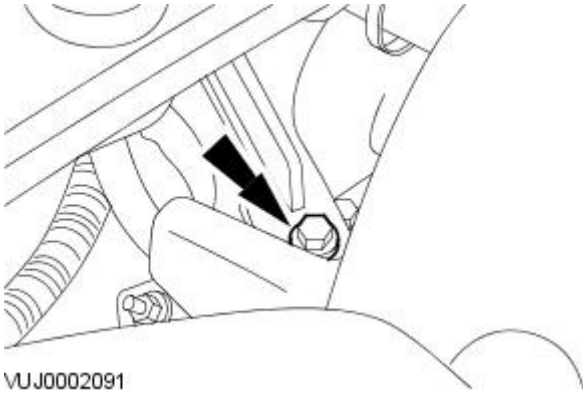


3. Remove the fuel pressure regulator bracket.

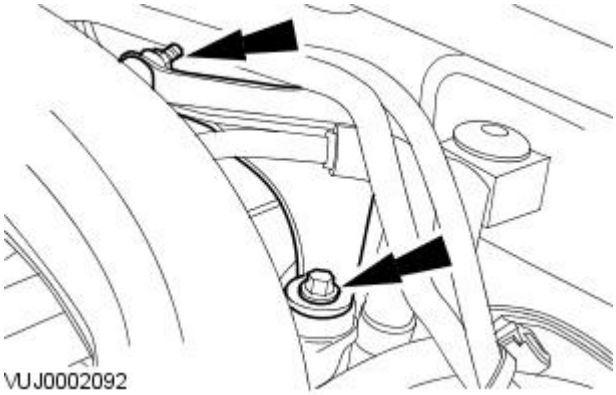


4. Disconnect the fuel pressure regulator electrical connector and vacuum hose (intake manifold removed for clarity).

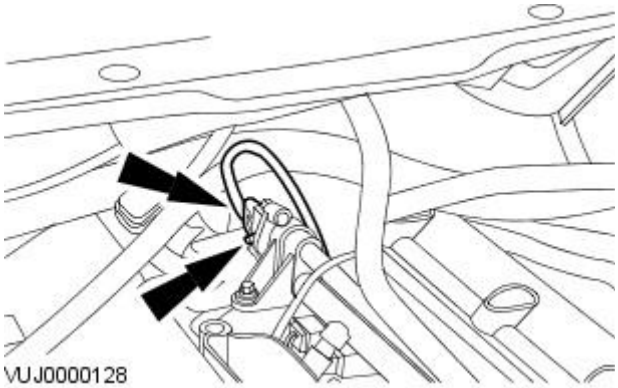


5. Remove the fuel pressure regulator (intake manifold removed for clarity).
   - Remove and discard the O-ring seals.

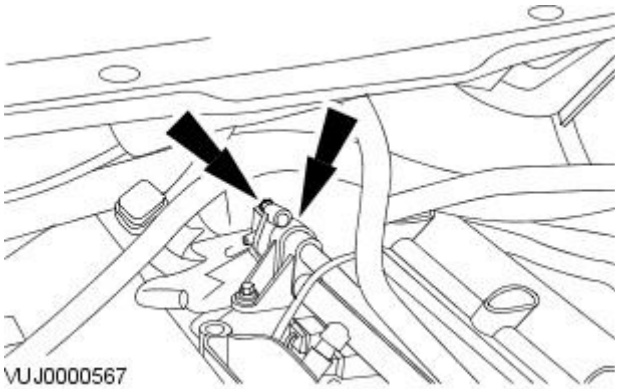


## Installation

GETtheMANUALS.org

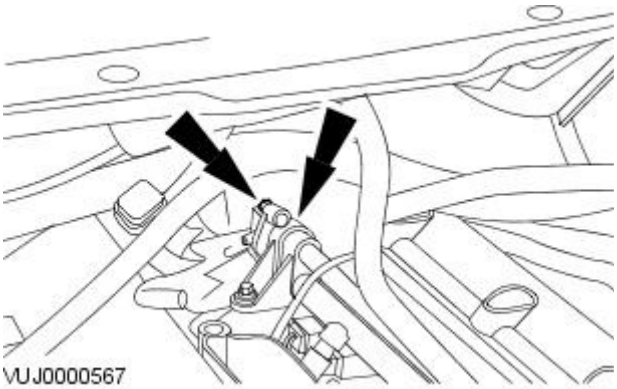


**1.** NOTE: Install new O-ring seals.

To install, reverse the removal procedure (intake manifold removed for clarity).

- Tighten to 10 Nm.

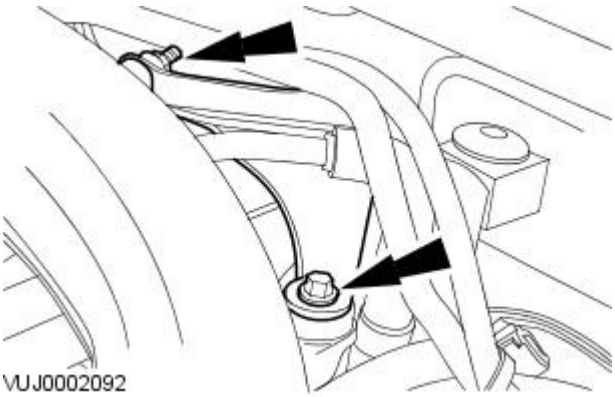


**2.** Install the fuel pressure regulator bracket.

- Tighten the lower retaining bolt to 10 Nm.
- Tighten the upper retaining bolt to 6 Nm.

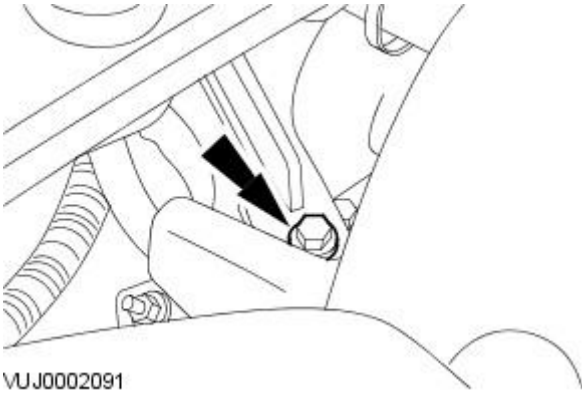


**3.** Tighten to 10 Nm.

GETtheMANUALS.org

# Fuel Charging and Controls - 2.5L NA V6 - AJV6 / 3.0L NA V6 - AJ27 - Throttle BodyVIN Range: M45255->N52047

Removal and Installation

## Removal

**1.** WARNING: When relieving cooling system pressure, cover the expansion tank cap with a thick cloth to prevent the possibility of scalding. Failure to follow these instructions may result in personal injury.

Remove the expansion tank cap to relieve the cooling system pressure.

**2.** CAUTION: Do not attempt to clean the throttle body. The bore and the throttle plate has a special coating applied during manufacture which should not be removed.

Remove the air cleaner outlet tube. For additional information, refer to Section 303-12A Intake Air Distribution and Filtering / 303-12B Intake Air Distribution and Filtering / 303-12C Intake Air Distribution and Filtering.

**3.** Disconnect the throttle motor electrical connector.

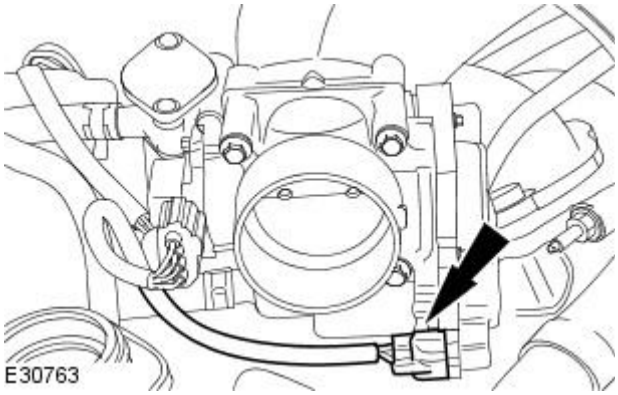


**4.** Disconnect the throttle position (TP) sensor electrical connector.

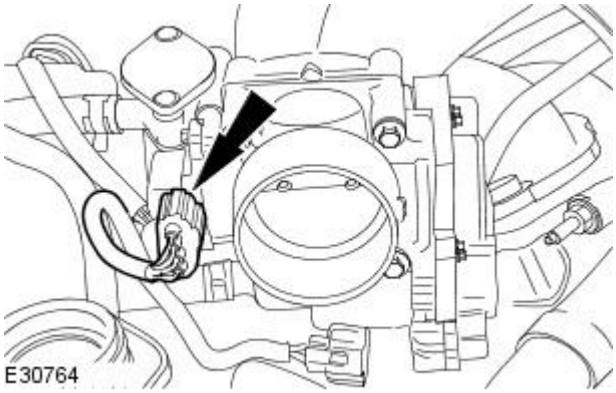


**5.** NOTE: Cap the coolant hoses to minimize coolant loss.

Detach the coolant hoses from the throttle body.

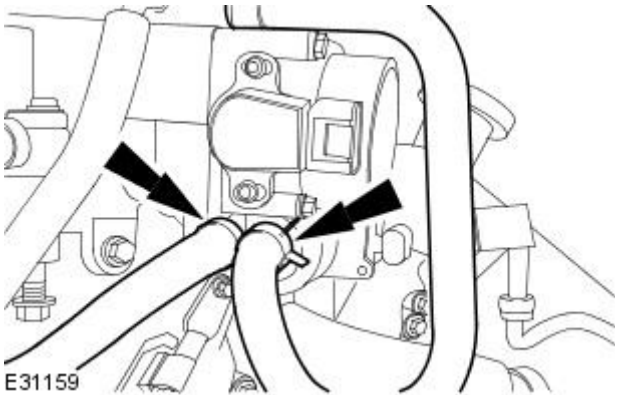


GETtheMANUALS.org

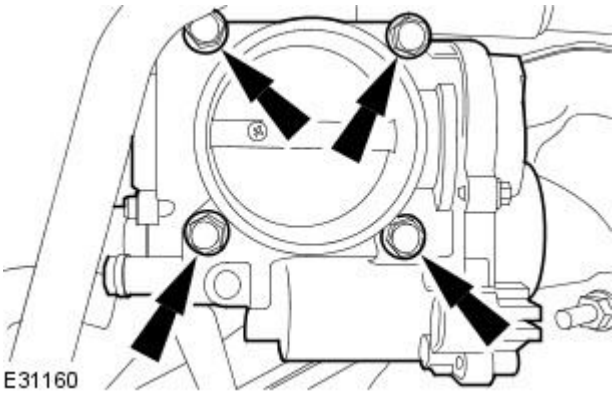


**6.** Remove the throttle body.

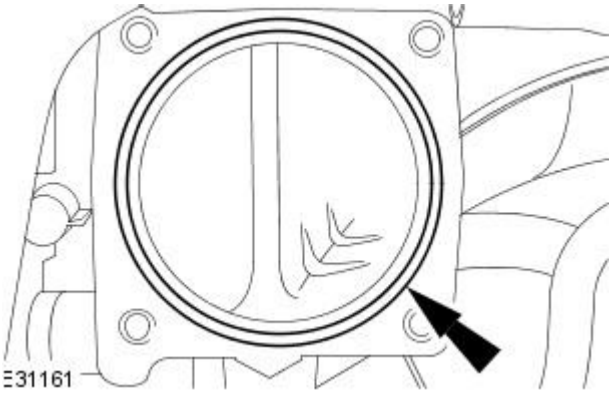


**7.** Remove and discard the O-ring seal.

## Installation

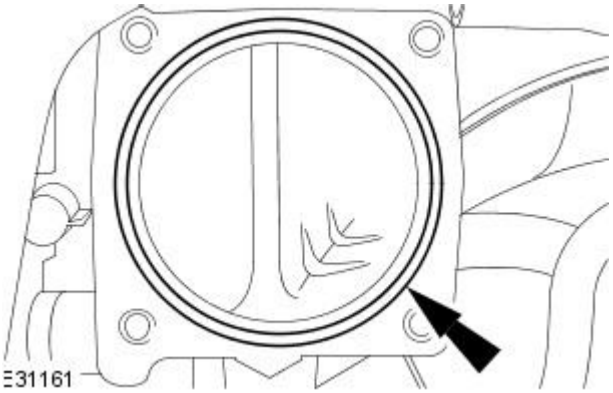


**1.** CAUTION: Do not attempt to clean the throttle body. The bore and the throttle plate has a special coating applied during manufacture which should not be removed.

To install, reverse the removal procedure.

- Install a new O-ring seal.

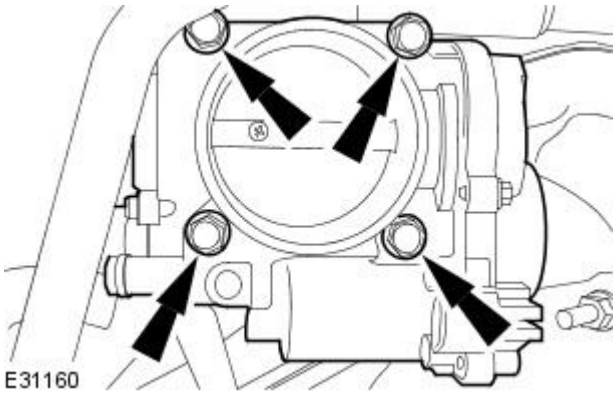


**2.** Tighten to 10 Nm.

**3.** Check and top up the cooling system as required.

GETtheMANUALS.org

# Fuel Charging and Controls - 2.5L NA V6 - AJV6 / 3.0L NA V6 - AJ27 - Throttle BodyVIN Range: N52048->N99999

Removal and Installation

## Removal

**1.** WARNING: When relieving cooling system pressure, cover the expansion tank cap with a thick cloth to prevent the possibility of scalding. Failure to follow these instructions may result in personal injury.

Remove the expansion tank cap to relieve the cooling system pressure.

**2.** CAUTION: Do not attempt to clean the throttle body. The bore and the throttle plate has a special coating applied during manufacture which should not be removed.

Remove the air cleaner outlet pipe.
For additional information, refer to: Air Cleaner Outlet Pipe - VIN Range: N52048->N99999 (303-12A Intake Air Distribution and Filtering - 2.5L NA V6 - AJV6/3.0L NA V6 - AJ27, Removal and Installation).

**3.** Disconnect the throttle body electrical connector.

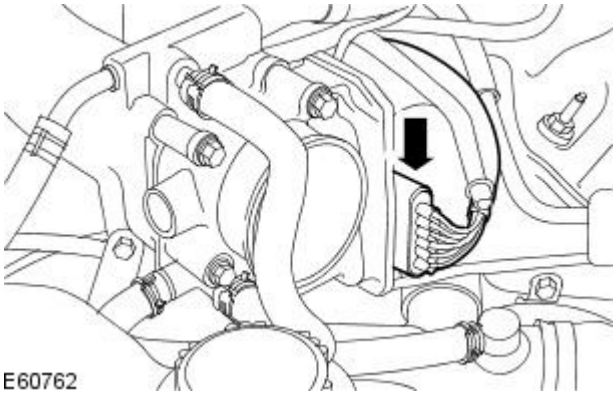


**4.** NOTE: Clamp the coolant hose to minimize coolant loss.

Disconnect the coolant hose.

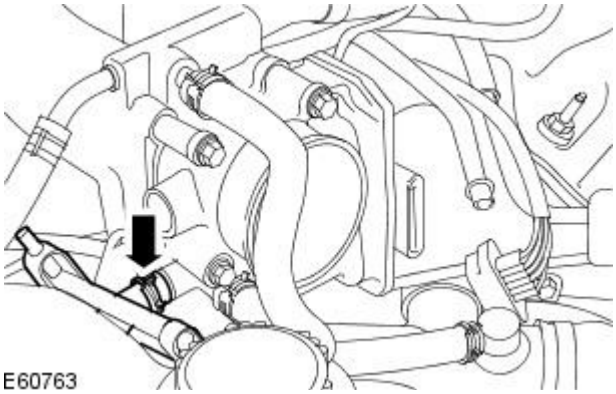


**5.** NOTE: Clamp the coolant hose to minimize coolant loss.

Disconnect the coolant hose.

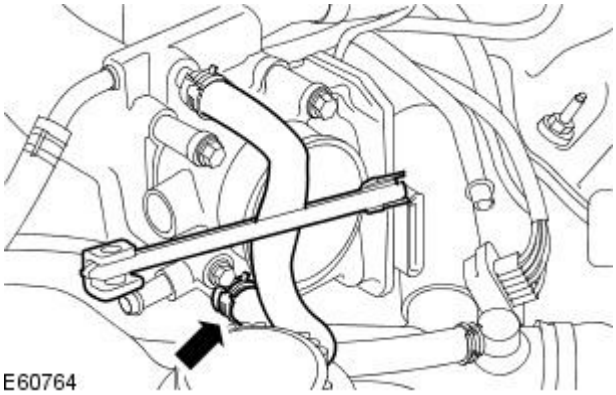


GETtheMANUALS.org

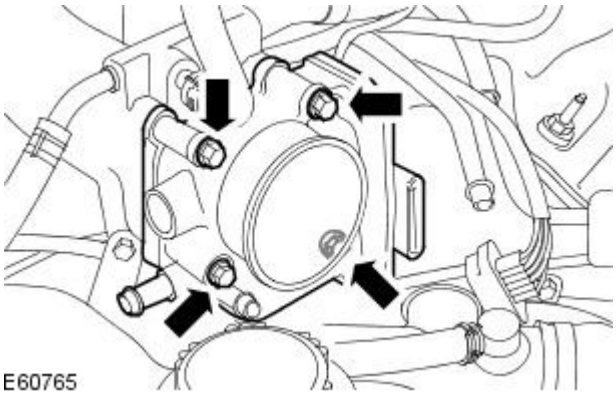


**6.** Remove the throttle body.

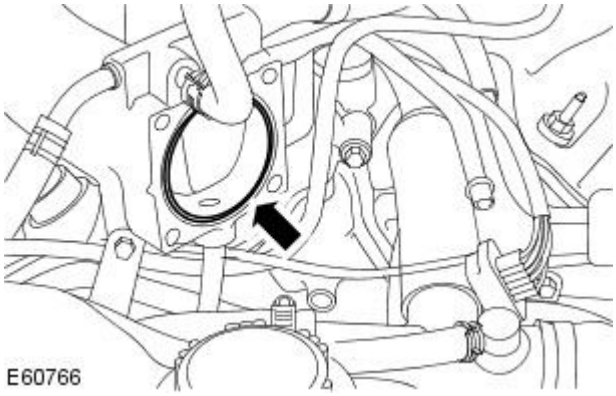


**7.** Remove and discard the O-ring seal.

## Installation

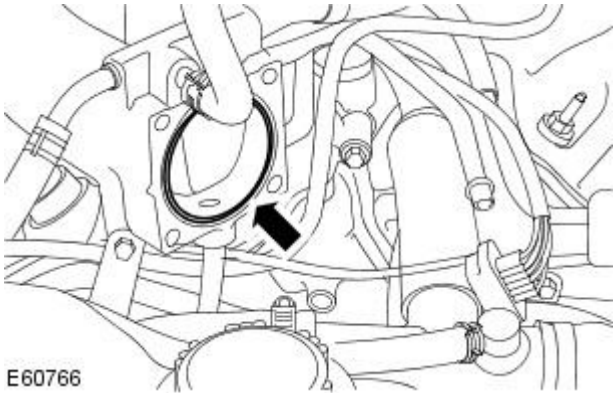


**1.** CAUTION: Do not attempt to clean the throttle body. The bore and the throttle plate has a special coating applied during manufacture which should not be removed.

To install, reverse the removal procedure.

- Install a new O-ring seal.

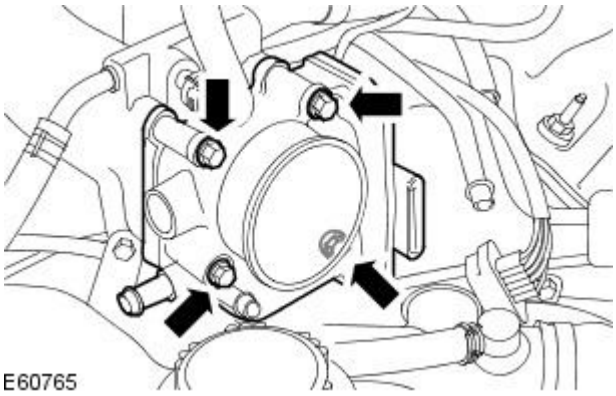


**2.** Tighten to 10 Nm.

**3.** Check and top up the cooling system as required.

GETtheMANUALS.org

# Fuel Charging and Controls - V8 4.2L Petrol / V8 S/C 4.2L Petrol -

**Torque Specifications**

| Description | Nm | lb-ft | lb-in |
|---|---|---|---|
| Fuel injection supply manifold vehicles with supercharger | 7 | - | 62 |
| Fuel injection supply manifold vehicles without supercharger | 22 | 16 | - |
| Fuel pressure regulator | 5 | - | 44 |
| Throttle body | 10 | - | 89 |

GETtheMANUALS.org

# Fuel Charging and Controls - V8 4.2L Petrol / V8 S/C 4.2L Petrol - Fuel Charging and Controls

Description and Operation

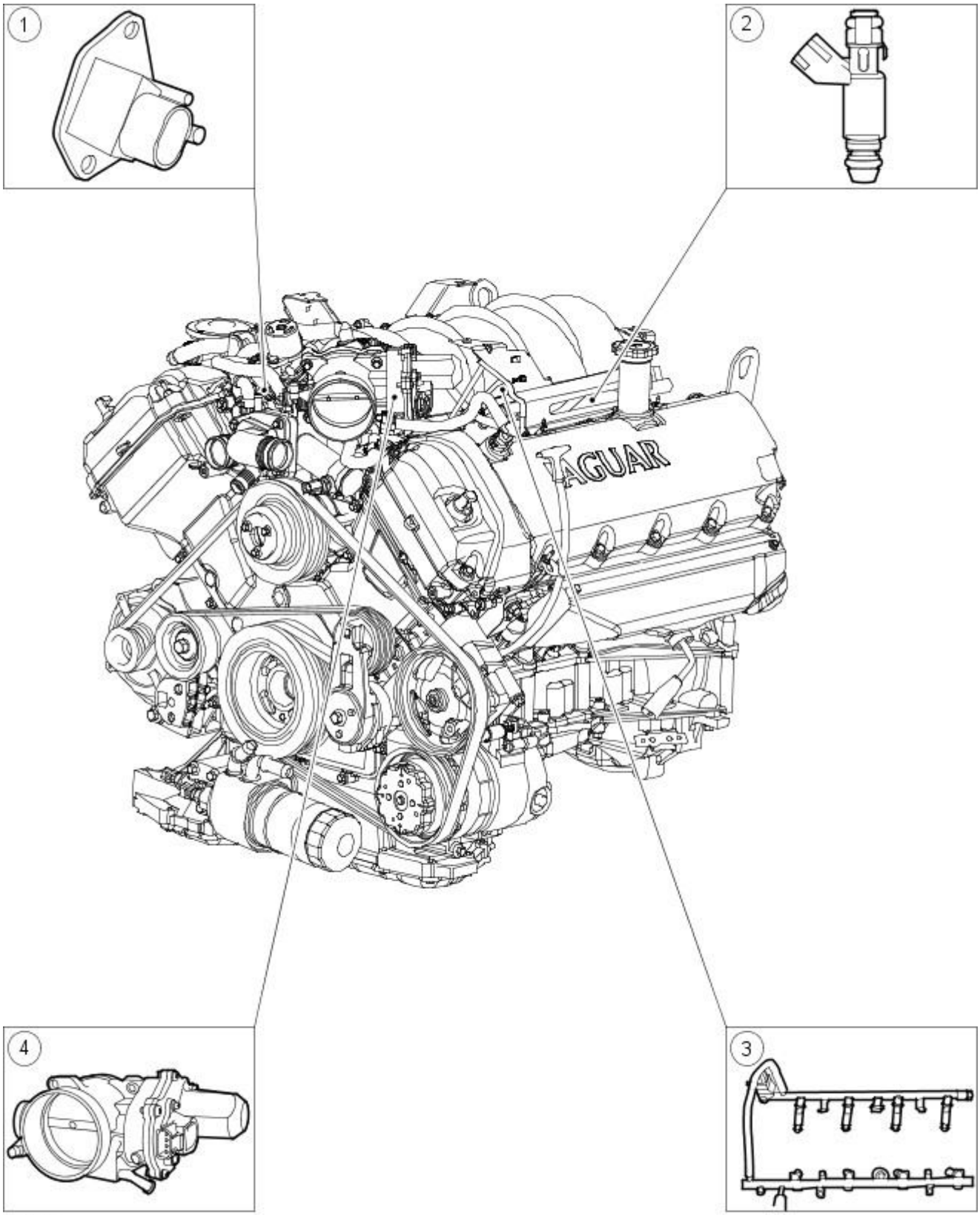


E31187

| Item | Part Number | Description |
|---|---|---|
| 1 | — | Fuel pressure regulator |
| 2 | — | Fuel injector |
| 3 | — | Fuel injection supply manifold |
| 4 | — | Throttle body |

GETtheMANUALS.org

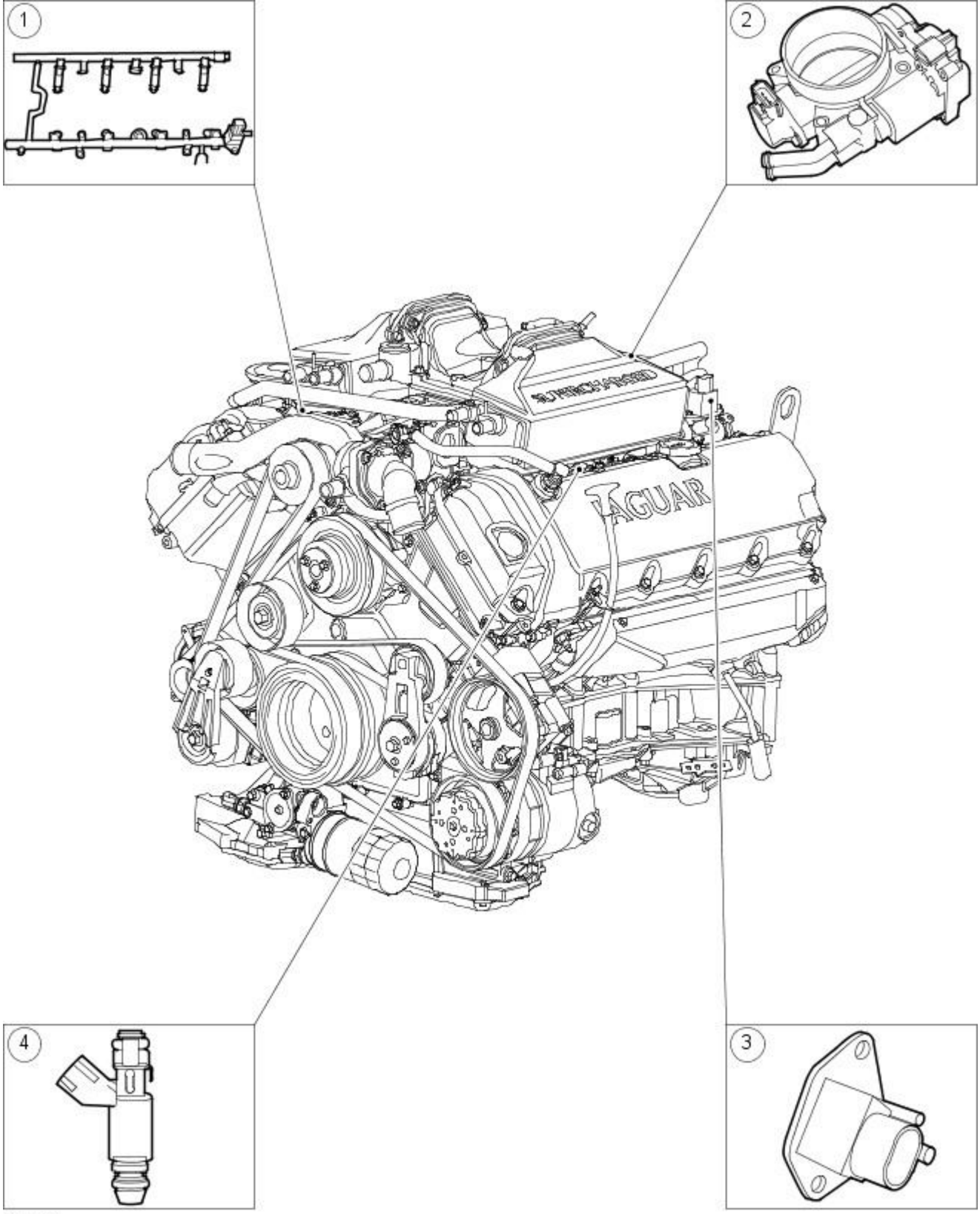


E31188

| Item | Part Number | Description |
|---|---|---|
| 1 | - | Fuel injection supply manifold |
| 2 | - | Throttle body |
| 3 | - | Fuel pressure regulator |
| 4 | - | Fuel injector |

The electronic returnless fuel system has the advantages of reduced fuel temperature and fuel tank vapor caused by constant fuel recirculation. The system delivers the correct amount of fuel to the engine under all conditions and at a constant pressure differential with respect to manifold absolute pressure.

Fuel is supplied at high pressure to the fuel injectors via a fuel injection supply manifold which incorporates fuel injectors, a fuel pressure regulator and a fuel temperature sensor. The engine control module (ECM) increases the fuel pressure to minimise fuel vapor formation to maintain fuel flow across the injectors.

The throttle body assembly is calibrated during assembly, no adjustments are required or permitted. The throttle motor is a 12 volt DC motor which via movement of the throttle blade controls the amount of air flowing into the engine.

GETtheMANUALS.org

# Fuel Charging and Controls - V8 4.2L Petrol/V8 S/C 4.2L Petrol - Fuel Charging and ControlsVIN Range: M45255->N52047

Diagnosis and Testing

1. **1.** Verify the customer concern by operating the system.
2. **2.** Visually inspect for obvious signs of mechanical or electrical damage.
3. **3.** If an obvious cause for an observed or reported concern is found, correct the cause (if possible) before proceeding to the next step.
4. **4.** If the concern is not visually evident, use a fault code reader to retreive fault codes before proceeding to the Symptom Chart.

**Symptom Chart**

| DTC | Condition | Possible Causes | Action |
|---|---|---|---|
| P0171 | Right-Hand bank combustion too lean | • Air intake leak between MAF sensor and throttle<br>• Fuel injector restriction<br>• Fuel filter / system restriction<br>• Fuel pressure sensor failure (low fuel pressure)<br>• Low fuel pump output<br>• HO2S (1/1; 1/2) harness wiring condition fault<br>• Exhaust leak (before catalyst)<br>• ECM receiving incorrect signal from one or more of the following components; ECT sensor, MAF sensor, IAT sensor, fuel rail pressure sensor, fuel rail temperature sensor | REFER to Section 303-07A Engine Ignition / 303-07B Engine Ignition / 303-07C Glow Plug System.REFER to Section 303-01A Engine / 303-01B Engine / 303-01C Engine.REFER to Fuel Charging and Controls / Fuel Injectors in this section.REFER to Section 309-00 Exhaust System.REFER to Section 303-14A Electronic Engine Controls / 303-14B Electronic Engine Controls / 303-14C Electronic Engine Controls.GO to Pinpoint Test B. |
| P0172 | Right-Hand bank combustion too rich | • Engine misfire<br>• Restricted air filter<br>• Leaking fuel injector(s)<br>• Fuel pressure sensor failure (high fuel pressure)<br>• ECM receiving incorrect signal from one or more of the following components; ECT sensor, MAF sensor, IAT sensor, fuel rail pressure sensor, fuel rail temperature sensor | REFER to Section 303-12A Intake Air Distribution and Filtering / 303-12B Intake Air Distribution and Filtering / 303-12C Intake Air Distribution and Filtering.REFER to Fuel Injectors in this section.REFER to Section 303-14A Electronic Engine Controls / 303-14B Electronic Engine Controls / 303-14C Electronic Engine Controls.GO to Pinpoint Test B. |
| P0174 | Left-Hand bank combustion too lean | • Air intake leak between MAF sensor and throttle<br>• Fuel injector restriction<br>• Fuel filter / system restriction<br>• Fuel pressure sensor failure (low fuel pressure)<br>• Low fuel pump output<br>• HO2S (2/1; 2/2) harness wiring condition fault<br>• Exhaust leak (before catalyst)<br>• ECM receiving incorrect signal from one or more of the following components; ECT sensor, MAF sensor, IAT sensor, fuel rail pressure sensor, fuel rail temperature sensor | REFER to Section 303-07A Engine Ignition / 303-07B Engine Ignition / 303-07C Glow Plug System.REFER to Section 303-01A Engine / 303-01B Engine / 303-01C Engine.REFER to Fuel Charging and Controls / Fuel Injectors in this section.REFER to Section 309-00 Exhaust System.REFER to Section 303-14A Electronic Engine Controls / 303-14B Electronic Engine Controls / 303-14C Electronic Engine Controls.GO to Pinpoint Test B. |
| P0175 | Left-Hand bank combustion too rich | • Engine misfire<br>• Restricted air filter<br>• Leaking fuel injector(s)<br>• Fuel pressure sensor failure (high fuel pressure)<br>• ECM receiving incorrect signal from one or more of the following components; ECT sensor, MAF sensor, IAT sensor, fuel rail pressure sensor, fuel rail temperature sensor | REFER to Section 303-12A Intake Air Distribution and Filtering / 303-12B Intake Air Distribution and Filtering / 303-12C Intake Air Distribution and Filtering.REFER to Fuel Injectors in this section.REFER to Section 303-14A Electronic Engine Controls / 303-14B Electronic Engine Controls / 303-14C Electronic Engine Controls.GO to Pinpoint Test B. |
| P1251, P1631, P1657, P1658 | Concern with Throttle motor relay | • Throttle motor relay<br>• Throttle motor relay circuit | REFER to Section 303-14A Electronic Engine Controls / 303-14B Electronic Engine Controls / 303-14C Electronic Engine Controls. |
| P0112, P0113 | Concern with IAT sensor | • Engine faulty leading to overheating<br>• Intake Air Temperature (IAT) sensor fault<br>• Harness fault<br>• ECM failure | REFER to Section 303-12A Intake Air Distribution and Filtering / 303-12B Intake Air Distribution and Filtering / 303-12C Intake Air Distribution and Filtering.REFER to Section 303-14A Electronic Engine Controls / 303-14B Electronic Engine Controls / 303-14C Electronic Engine Controls. |
| P0121, P0122, P0123, P0222, P0223 | Concern with throttle position (TP) sensor | • TP sensor fault<br>• Harness fault<br>• ECM failure | GO to Pinpoint Test F. REFER to Section 303-14A Electronic Engine Controls / 303-14B Electronic Engine Controls / 303-14C Electronic Engine Controls. |

GETtheMANUALS.org

| DTC | Condition | Possible Causes | Action |
|---|---|---|---|
| P0116, P0117, P0118, P0125 | Concern with engine coolant temperature | • Engine coolant temperature sensor<br>• Harness fault<br>• ECM failure | REFER to Section 303-14A Electronic Engine Controls / 303-14B Electronic Engine Controls / 303-14C Electronic Engine Controls. |
| P0201, P0202, P0203, P0204, P0205, P0206, P0207, P0208 | Concern with fuel injectors | • Faulty injector(s)<br>• Harness fault<br>• ECM failure | REFER to Fuel Injectors / Fuel Charging Wiring Harness in this section.REFER to Section 303-14A Electronic Engine Controls / 303-14B Electronic Engine Controls / 303-14C Electronic Engine Controls.GO to Pinpoint Test A. |
| P0191 | Concern with fuel rail pressure sensor | • Fuel rail pressure sensor<br>• Harness fault<br>• Fuel filter/system restriction<br>• Fuel system leak<br>• Incorrect fuel pump output<br>• Fuel rail pressure sensor to ECM sensing circuit; high resistance, open circuit, short circuit to high voltage<br>• Fuel rail pressure sensor to splice in sensor supply circuit; high resistance, open circuit<br>• Fuel rail pressure sensor to splice in sensor ground circuit; high resistance, open circuit<br>• Fuel rail pressure sensor to splice in sensor ground circuit; high resistance, open circuit, short circuit to ground, short circuit to high voltage<br>• Fuel rail pressure sensor failure | REFER to Fuel Charging Wiring Harness in this section.REFER to Section 303-14A Electronic Engine Controls / 303-14B Electronic Engine Controls / 303-14C Electronic Engine Controls.GO to Pinpoint Test B. |
| P0192 | Concern with fuel rail pressure sensor (low voltage/low pressure) | • Fuel rail pressure sensor disconnected<br>• Fuel rail pressure sensor to ECM sensing circuit; open circuit or short circuit to ground<br>• Fuel rail pressure sensor to splice in sensor supply circuit; high resistance, open circuit<br>• Fuel rail pressure sensor failure | GO to Pinpoint Test B. |
| P0193 | Concern with fuel rail pressure sensor (high voltage/high pressure) | • Fuel rail pressure sensor to ECM wiring (supply/sense) short circuit to each other<br>• Fuel rail pressure sensor to ECM sense circuit; short circuit to high voltage<br>• Fuel rail pressure sensor to splice in sensor ground circuit; open circuit<br>• Fuel rail pressure sensor failure | GO to Pinpoint Test B. |
| P0460 | Concern with fuel level sensors | • Fuel level sensor to instrument cluster circuit(s); intermittent short circuit, open circuit, high resistance<br>• Fuel level sensor failure<br>• Instrument cluster fault | GO to Pinpoint Test C. |
| P1236 | Concern with fuel pump commands (fuel pump not activated when requested by ECM) | • ECM to REM input wire open circuit, short circuit, high resistance<br>• REM to fuel pump circuits open circuit<br>• REM failure | GO to Pinpoint Test D. |
| P1229 | Concern with throttle motor control circuit | • Throttle motor disconnected<br>• Throttle motor to ECM drive circuits; short circuit or open circuit<br>• Throttle motor failure | GO to Pinpoint Test E. REFER to Section 303-14A Electronic Engine Controls / 303-14B Electronic Engine Controls / 303-14C Electronic Engine Controls. |
| P1224 | Concern with throttle control position | • Throttle adaptions not performed after battery disconnect<br>• TP sensor disconnected<br>• TP sensor to ECM sense circuits; open circuit, high resistance<br>• Throttle motor relay failure<br>• Throttle motor relay to ECM circuit fault<br>• Throttle motor relay power supply open circuit<br>• ECM ground circuit fault (relay coil drive)<br>• Throttle motor to ECM drive circuits; open circuit, short circuit, high resistance<br>• Throttle motor failure | GO to Pinpoint Test G. REFER to Section 303-14A Electronic Engine Controls / 303-14B Electronic Engine Controls / 303-14C Electronic Engine Controls. Individual Pinpoint tests for components and circuits listed |

GETtheMANUALS.org

| DTC | Condition | Possible Causes | Action |
|---|---|---|---|
| | | • Throttle body failure | |
| P1250, P1254 | Concern with throttle valve return spring and "limp-home" spring | Throttle body | These DTCs can only be accurately diagnosed using the Jaguar Approved Diagnostic System. If this is not available, INSTALL a new throttle body.<br>REFER to Throttle Body in this section.<br>CLEAR the DTC, TEST the system for normal operation. |
| P1656 | Concern with TP sensor amplifier circuit | ECM | REFER to Section 303-14A Electronic Engine Controls / 303-14B Electronic Engine Controls / 303-14C Electronic Engine Controls. |
| P1233 | Concern with secondary fuel pump (S/C only) | • Secondary fuel pump<br>• Secondary fuel pump module<br>• Secondary fuel pump driver input circuit | GO to Pinpoint Test H. |
| P3705 | Concern with secondary fuel pump (S/C only) | • Secondary fuel pump<br>• Secondary fuel pump module<br>• Secondary fuel pump driver output circuit | GO to Pinpoint Test I. |
| P1339 | Concern with secondary fuel pump (S/C only) | • Secondary fuel pump<br>• Secondary fuel pump module<br>• Secondary fuel pump driver circuit, low/high input | GO to Pinpoint Test J. |
| P1611 | Sub CPU failure | ECM | INSTALL a new ECM. REFER to Section 303-14A Electronic Engine Controls / 303-14B Electronic Engine Controls / 303-14C Electronic Engine Controls. Before replacing a ECM, contact Dealer technical support. |

**Powertrain Control Module Harness Connector**

| Pin Number | Circuit Function | Circuit Color |
|---|---|---|
| 120 | Cyl 1 injector GROUND supply | BG |
| 115 | Cyl 2 injector GROUND supply | BR |
| 114 | Cyl 3 injector GROUND supply | BK |
| 119 | Cyl 4 injector GROUND supply | BO |
| 113 | Cyl 5 injector GROUND supply | BG |
| 118 | Cyl 6 injector GROUND supply | U |
| 117 | Cyl 7 injector GROUND supply | BW |
| 112 | Cyl 8 injector GROUND supply | UY |

VUJ0002082

**Cyl 1 Injector Harness Connector**

| Pin Number | Circuit Function | Circuit Color |
|---|---|---|
| 1 | GROUND supply | BG |
| 2 | Voltage supply | NR |

VUJ0002082

**Cyl 2 Injector Harness Connector**

| Pin Number | Circuit Function | Circuit Color |
|---|---|---|
| 1 | GROUND supply | BR |
| 2 | Voltage supply | NR |

VUJ0002082

**Cyl 3 Injector Harness Connector**

| Pin Number | Circuit Function | Circuit Color |
|---|---|---|
| 1 | GROUND supply | BK |
| 2 | Voltage supply | NR |

VUJ0002082

**Cyl 4 Injector Harness Connector**

GETtheMANUALS.org

| Pin Number | Circuit Function | Circuit Color |
|---|---|---|

| Pin Number | Circuit Function | Circuit Color |
|---|---|---|
| 1 | GROUND supply | BO |
| 2 | Voltage supply | NR |

VUJ0002082

**Cyl 5 Injector Harness Connector**

| Pin Number | Circuit Function | Circuit Color |
|---|---|---|
| 1 | GROUND supply | BG |
| 2 | Voltage supply | NR |

VUJ0002082

**Cyl 6 Injector Harness Connector**

| Pin Number | Circuit Function | Circuit Color |
|---|---|---|
| 1 | GROUND supply | U |
| 2 | Voltage supply | NR |

VUJ0002082

**Cyl 7 Injector Harness Connector**

| Pin Number | Circuit Function | Circuit Color |
|---|---|---|
| 1 | GROUND supply | BW |
| 2 | Voltage supply | NR |

VUJ0002082

**Cyl 8 Injector Harness Connector**

| Pin Number | Circuit Function | Circuit Color |
|---|---|---|
| 1 | GROUND supply | UY |
| 2 | Voltage supply | NR |

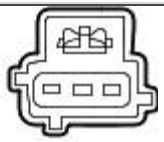

VUJ0002081

**Injection Pressure Sensor Harness Connector**

| Pin number | Circuit Function | Circuit Color |
|---|---|---|
| 1 | Voltage reference supply | OY |
| 2 | GROUND supply | BG |
| 3 | Signal return | U |

## PINPOINT TEST A : FUEL INJECTORS: P0201, P0202, P0203, P0204, P0205, P0206, P0207, P0208

• NOTE: The DTC set will indicate which cylinder injector or circuit is faulty. Only in the event of multiple cylinder misfires will it be necessary to check more than one injector or circuit, in which case, multiple DTCs will be set.

| TEST CONDITIONS | DETAILS/RESULTS/ACTIONS |
|---|---|
| **A1: CHECK THE INJECTOR COIL RESISTANCE** | |
| | 1 Turn the ignition switch to the OFF position. |
| | 2 Disconnect the relevant injector electrical connector. (PI032 to PI039). |
| | 3 Measure the resistance between the injector pins. |
| | Is the resistance between 12 and 16 ohms?<br>**Yes**<br>GO to A2.<br>**No**<br>INSTALL a new injector.<br>REFER to Fuel Injectors in this section.<br>CLEAR the DTC. TEST the system for normal operation. |
| **A2: CHECK THE INJECTOR COIL INSULATION** | |
| | 1 Measure the resistance between the injector pin 001 and the injector body. |
| | 2 Measure the resistance between the injector pin 002 and the injector body. |

GETtheMANUALS.org

| | |
|---|---|
| | Are both resistances greater than 10,000 ohms?<br>**Yes**<br>GO to A3.<br>**No**<br>INSTALL a new injector.<br>REFER to Fuel Injectors in this section.<br>CLEAR the DTC. TEST the system for normal operation. |
| **A3: CHECK THE INJECTOR SUPPLY VOLTAGE** | |
| | 1 Turn the ignition switch to the ON position. |
| | 2 Disconnect the relevant injector harness electrical connector, (PI032 to PI039). |
| | 3 Measure the voltage between the relevant injector harness electrical connector, (PI032 to PI039) pin 002 and GROUND. |
| | Is the voltage greater than 12 Volts?<br>**Yes**<br>GO to A4.<br>**No**<br>REPAIR the circuit between the relevant injector harness electrical connector, (PI032 to PI039) pin 002 and battery. This circuit includes the power distribution fuse box, fuse 41, and the EMS control relay. For additional information, refer to wiring diagrams. CLEAR the DTC. TEST the system for normal operation. |
| **A4: CHECK THE INJECTOR GROUND CIRCUIT** | |
| | 1 Turn the ignition switch to the OFF position. |
| | 2 Disconnect the ECM electrical connector, PI001. |
| | 3 Measure the resistance between the relevant injector harness electrical connector, (PI032 to PI039) pin 001 and PI001, pins as follows -<br>• Injector Cyl 1 pin 001 (BG) and ECM pin 120.<br>• Injector Cyl 2 pin 001 (BR) and ECM pin 115.<br>• Injector Cyl 3 pin 001 (BK) and ECM pin 114.<br>• Injector Cyl 4 pin 001 (BO) and ECM pin 115.<br>• Injector Cyl 5 pin 001 (BG) and ECM pin 113.<br>• Injector Cyl 6 pin 001 (U) and ECM pin 118.<br>• Injector Cyl 7 pin 001 (BW) and ECM pin 117.<br>• Injector Cyl 8 pin 001 (UY) and ECM pin 112. |
| | Is the resistance less than 5 ohms?<br>**Yes**<br>GO to A5.<br>**No**<br>REPAIR the circuit between the relevant injector harness electrical connector pin 001 and the powertrain control module electrical connector. For additional information, refer to wiring diagrams. CLEAR the DTC. TEST the system for normal operation. |
| **A5: CHECK THE INJECTOR GROUND CIRCUIT FOR SHORT CIRCUIT TO BATTERY** | |
| | 1 Measure the voltage between the relevant injector harness electrical connector, (PI032 to PI039) pin 001 and GROUND. |
| | Is the voltage greater than 1 volt?<br>**Yes**<br>REPAIR the short circuit. For additional information, refer to wiring diagrams. CLEAR the DTC. TEST the system for normal operation.<br>**No**<br>GO to A6. |
| **A6: CHECK THE INJECTOR GROUND CIRCUIT FOR SHORT CIRCUIT TO GROUND** | |
| | 1 Measure the resistance between the relevant injector harness electrical connector, (PI032 to PI039) pin 001 and GROUND. |
| | Is the resistance less than 10,000 ohms?<br>**Yes**<br>REPAIR the short circuit. For additional information, refer to wiring diagrams. CLEAR the DTC. TEST the system for normal operation.<br>**No**<br>INSTALL a new ECM. REFER to Section 303-14A Electronic Engine Controls / 303-14B Electronic Engine Controls / 303-14C Electronic Engine Controls. Before replacing a ECM, contact Dealer technical support. |

| **PINPOINT TEST B : FUEL RAIL PRESSURE SENSOR: P0190, P0192, P0193** | |
|---|---|
| **TEST CONDITIONS** | **DETAILS/RESULTS/ACTIONS** |
| **B1: CHECK THE FUEL RAIL PRESSURE SENSOR SUPPLY VOLTAGE** | |
| | 1 Turn the ignition switch to the OFF position. |
| | 2 Disconnect the fuel rail pressure sensor electrical connector, PI028. |
| | 3 Turn the ignition switch to the ON position. |
| | 4 Measure the supply voltage to the fuel rail pressure sensor electrical connector, PI028 pin 001, (OY) and GROUND. |
| | Is the supply voltage between 4.5 and 5.5 volts?<br>**Yes**<br>GO to B2.<br>**No**<br>REPAIR the circuit between PI028, pin 001, (OY) and ECM electrical connector, PI001, pin 012. For additional information, refer to wiring diagrams. CLEAR the DTC. TEST the system for normal operation.<br>(The fault could be in any of the components or sensors in the 5 volt supply circuit, or the ECM)<br>If the DTC is repeated, INSTALL a new ECM. REFER to Section 303-14A Electronic Engine Controls / 303-14B Electronic Engine Controls / 303-14C Electronic Engine Controls. Before replacing a ECM, contact Dealer technical support |
| **B2: CHECK THE FUEL RAIL PRESSURE SENSOR GROUND CIRCUIT FOR OPEN CIRCUIT** | |
| | 1 Turn the ignition switch to the OFF position. |
| | 2 Measure the resistance between the fuel rail pressure sensor electrical connector PI028, pin 002, (BG) and GROUND. |
| | Is the resistance greater than 10,000 ohms?<br>**Yes**<br>REPAIR the circuit between PI028, pin 002, (BG) and ECM electrical connector, PI001, pin 019. For additional information, refer to wiring diagrams. CLEAR the DTC. TEST the system for normal operation.<br>(The fault could be in any of the components or sensors in the 5 volt supply circuit, or the ECM)<br>If the DTC is repeated, INSTALL a new ECM. REFER to Section 303-14A Electronic Engine Controls / 303-14B |

BEST-TIEWIRINGDIAGRAMS.BIZ

| | |
|---|---|
| | Electronic Engine Controls / 303-14C Electronic Engine Controls. Before replacing a ECM, contact Dealer technical support<br>**No**<br>GO to B3. |
| **B3: CHECK THE FUEL RAIL PRESSURE SENSOR SIGNAL CIRCUIT FOR OPEN CIRCUIT** | |
| | 1 Disconnect the ECM electrical connector, PI001. |
| | 2 Measure the resistance between the fuel rail pressure sensor electrical connector PI028, pin 003, (U) and PI001, pin 073. |
| | Is the resistance greater than 5 ohms?<br>**Yes**<br>REPAIR the circuit between PI028, pin 003, (U) and PI001, pin, 073 (U). For additional information, refer to wiring diagrams. CLEAR the DTC. TEST the system for normal operation.<br>**No**<br>GO to B4. |
| **B4: CHECK THE FUEL RAIL PRESSURE SENSOR SIGNAL CIRCUIT FOR SHORT TO GROUND** | |
| | 1 Measure the resistance between the fuel rail pressure sensor electrical connector PI028, pin 003 (U) and GROUND. |
| | Is the resistance less than 10,000 ohms?<br>**Yes**<br>REPAIR the circuit between PI028, pin 003 (U) and PI001 pin 073, (U). For additional information, refer to wiring diagrams. CLEAR the DTC. TEST the system for normal operation.<br>**No**<br>GO to B5. |
| **B5: CHECK THE FUEL RAIL PRESSURE SENSOR CIRCUIT RESISTANCE** | |
| | 1 Disconnect the fuel rail pressure sensor electrical connector PI028. |
| | 2 Measure the resistance between the fuel rail pressure sensor pins 001 and 002. |
| | Is the resistance between 10,000 and 12,000 ohms?<br>**Yes**<br>GO to B6.<br>**No**<br>Install a new fuel rail pressure sensor.<br>REFER to Fuel Pressure Regulator in this section.<br>CLEAR the DTC. TEST the system for normal operation. |
| **B6: CHECK THE FUEL RAIL PRESSURE SENSOR CIRCUIT RESISTANCE** | |
| | 1 Measure the resistance between the fuel rail pressure sensor pins 002 and 003. |
| | Is the resistance between 22,000 and 33,000 ohms?<br>**Yes**<br>GO to B7.<br>**No**<br>Install a new fuel rail pressure sensor.<br>REFER to Fuel Pressure Regulator in this section.<br>CLEAR the DTC. TEST the system for normal operation. |
| **B7: CHECK THE FUEL RAIL PRESSURE SENSOR CIRCUIT RESISTANCE** | |
| | 1 Measure the resistance between the fuel rail pressure sensor pins 001 and 003. |
| | Is the resistance between 22,000 and 33,000 ohms?<br>**Yes**<br>Install a new ECM.REFER to Section 303-14A Electronic Engine Controls / 303-14B Electronic Engine Controls / 303-14C Electronic Engine Controls. Before replacing a ECM, contact Dealer technical support.<br>**No**<br>Install a new fuel rail pressure sensor.<br>REFER to Fuel Pressure Regulator in this section.<br>CLEAR the DTC. TEST the system for normal operation. |

| **PINPOINT TEST C : FUEL LEVEL SENSORS: P0460** | |
|---|---|
| **TEST CONDITIONS** | **DETAILS/RESULTS/ACTIONS** |
| **C1: CHECK THE FUEL LEVEL SENSOR (1) GROUND CIRCUIT** | |
| | 1 Disconnect the fuel level sensor electrical connector, FP004. |
| | 2 Turn the ignition switch to the ON position. |
| | 3 Measure the resistance between electrical connector FP004, pin 003 (KO) and GROUND. |
| | Is the resistance less than 5 ohms?<br>**Yes**<br>GO to C2.<br>**No**<br>REPAIR the circuit between electrical connector FP004, pin 003 (KO) and GROUND. For additional information, refer to wiring diagrams.CLEAR the DTC. TEST the system for normal operation. |
| **C2: CHECK THE FUEL LEVEL SENSOR (1) SIGNAL CIRCUIT** | |
| | 1 Disconnect the REM electrical connector, CA101. |
| | 2 Measure the resistance between CA101, pin 015 (WR) and FP004, pin 001 (WR). |
| | Is the resistance less than 5 ohms?<br>**Yes**<br>GO to C3.<br>**No**<br>REPAIR the circuit between CA101, pin 015 (WR) and FP004, pin 001 (WR). For additional information, refer to wiring diagrams. CLEAR the DTC. TEST the system for normal operation. |
| **C3: CHECK THE FUEL LEVEL SENSOR (1) RHEOSTAT (EMPTY)** | |
| | 1 Empty the fuel tank. |
| | 2 Measure the resistance between pins 001 and 003 of the fuel level sensor. |
| | Is the resistance 20 ohms?<br>**Yes**<br>GO to C4.<br>**No**<br>INSTALL a new fuel level sensor.<br>REFER to Section 310-01 Fuel Tank and Lines.<br>CLEAR the DTC. TEST the system for normal operation. |
| **C4: CHECK THE FUEL LEVEL SENSOR (1) RHEOSTAT (FULL)** | |
| | 1 Fill the fuel tank. |
| | 2 Measure the resistance between pins 001 and 003 of the fuel level sensor. |

GETtheMANUALS.org

| | |
|---|---|
| | Is the resistance 160 ohms?<br>**Yes**<br>GO to C5.<br>**No**<br>INSTALL a new fuel level sensor.<br>REFER to Section 310-01 Fuel Tank and Lines.<br>CLEAR the DTC. TEST the system for normal operation. |
| **C5: CHECK THE FUEL LEVEL SENSOR (2) GROUND CIRCUIT** | |
| | 1 Disconnect the fuel level sensor electrical connector, FP003. |
| | 2 Turn the ignition switch to the ON position. |
| | 3 Measure the resistance between electrical connector FP003, pin 003 (KO) and GROUND. |
| | Is the resistance less than 5 ohms?<br>**Yes**<br>GO to C6.<br>**No**<br>REPAIR the circuit between FP003, pin 003 (KO) and ground. For additional information, refer to wiring diagrams.<br>CLEAR the DTC. TEST the system for normal operation. |
| **C6: CHECK THE FUEL LEVEL SENSOR (2) SIGNAL CIRCUIT** | |
| | 1 Disconnect the REM electrical connector, CA101. |
| | 2 Measure the resistance between FP003, pin 001 (WU) and CA101, pin 016 (WU). |
| | Is the resistance less than 5 ohms?<br>**Yes**<br>GO to C7.<br>**No**<br>REPAIR the circuit between FP003, pin 001 (WU) and CA101, pin 016 (WU) For additional information, refer to wiring diagrams. CLEAR the DTC. TEST the system for normal operation. |
| **C7: CHECK THE FUEL LEVEL SENSOR (2) RHEOSTAT. (EMPTY)** | |
| | 1 Empty the fuel tank. |
| | 2 Measure the resistance between pins 001 and 003 of the fuel level sensor. |
| | Is the resistance 20 ohms?<br>**Yes**<br>GO to C8.<br>**No**<br>INSTALL a new fuel level sensor.<br>REFER to Section 310-01 Fuel Tank and Lines.<br>CLEAR the DTC. TEST the system for normal operation. |
| **C8: CHECK THE FUEL LEVEL SENSOR (2) RHEOSTAT. (FULL)** | |
| | 1 Fill the fuel tank. |
| | 2 Measure the resistance between pins 001 and 003 of the fuel level sensor. |
| | Is the resistance 160 ohms?<br>**Yes**<br>INSTALL a new REM.<br>REFER to Section 419-10 Multifunction Electronic Modules.<br>If the DTC is repeated, INSTALL a new instrument cluster.<br>REFER to Section 413-01 Instrument Cluster.<br>CLEAR the DTC. TEST the system for normal operation.<br>**No**<br>INSTALL a new fuel level sensor.<br>REFER to Section 310-01 Fuel Tank and Lines.<br>CLEAR the DTC. TEST the system for normal operation. |

| **PINPOINT TEST D : FUEL PUMP NOT ACTIVATED WHEN REQUESTED BY ECM: P1236** | |
|---|---|
| **TEST CONDITIONS** | **DETAILS/RESULTS/ACTIONS** |
| **D1: CHECK THE POWER SUPPLY TO THE REM** | |
| | 1 Disconnect the REM electrical connector, CA103. |
| | 2 Turn the ignition switch to the ON position. |
| | 3 Measure the voltage between CA103, pin 001 (GR) and GROUND. |
| | Is the voltage greater than 10 volts?<br>**Yes**<br>GO to D2.<br>**No**<br>REPAIR the supply circuit to the REM. This circuit includes the rear power distribution box, fuse 47, the fuel pump relay, and fuse 23. For additional information, refer to the wiring diagrams. CLEAR the DTC. TEST the system for normal operation. |
| **D2: CHECK THE REM + OUTPUT TO THE FUEL PUMP** | |
| | 1 Reconnect CA103. |
| | 2 Disconnect the fuel pump electrical connector, FP004. |
| | 3 Turn the ignition switch to the CRANK position. |
| | 4 Measure the voltage between FP004, pin 002 (R) and GROUND. |
| | Is the voltage greater than 10 volts?<br>**Yes**<br>GO to D4.<br>**No**<br>GO to D3. |
| **D3: CHECK THE REM - OUTPUT TO THE FUEL PUMP** | |
| | 1 Turn the ignition switch to the CRANK position. |
| | 2 Measure the resistance between FP004, pin 004 (B) and GROUND. |
| | Is the resistance less than 10 ohms?<br>**Yes**<br>INSTALL a new fuel pump.<br>REFER to Section 310-01 Fuel Tank and Lines.<br>CLEAR the DTC. TEST the system for normal operation.<br>**No**<br>GO to D4. |
| **D4: CHECK THE ECM OUTPUT WIRE TO THE REM FOR CONTINUITY** | |

GETtheMANUALS.org

| | |
|---|---|
| | 1 Disconnect the battery negative terminal. |
| | 2 Disconnect the REM electrical connector, CA103. |
| | 3 Disconnect the ECM electrical connector, PI001. |
| | 4 Measure the resistance between PI001, pin 027 (WR) and CA103, pin 019 (WR) |
| | Is the resistance less than 5 ohms?<br>**Yes**<br>INSTALL a new REM.<br>REFER to Section 419-10 Multifunction Electronic Modules.<br>CLEAR the DTC. TEST the system for normal operation. If the DTC is repeated, INSTALL a new ECM. REFER to Section 303-14A Electronic Engine Controls / 303-14B Electronic Engine Controls / 303-14C Electronic Engine Controls. Before replacing a ECM, contact Dealer technical support.<br>**No**<br>REPAIR the circuit between the ECM and the REM. For additional information, refer to the wiring diagrams. CLEAR the DTC. TEST the system for normal operation. |

## PINPOINT TEST E : THROTTLE CONTROL POSITION ERROR: P1224

• NOTE: For further diagnosis on this DTC, REFER to Section 303-14A Electronic Engine Controls / 303-14B Electronic Engine Controls / 303-14C Electronic Engine Controls.

| TEST CONDITIONS | DETAILS/RESULTS/ACTIONS |
|---|---|
| **E1: CHECK THROTTLE CONTROL - CIRCUIT FOR CONTINUITY** | |
| | 1 Disconnect the throttle motor electrical connector, PI018. |
| | 2 Disconnect the ECM electrical connector, PI001. |
| | 3 Measure the resistance between PI001, pin 106 (RW) and throttle motor electrical connector PI018, pin 002 (RW) |
| | Is the resistance less than 5 ohms?<br>**Yes**<br>GO to E2.<br>**No**<br>REPAIR the circuit between ECM electrical connector PI001, pin 106 (RW) and throttle motor electrical connector PI018, pin 002 (RW) For additional information, refer to wiring diagrams. CLEAR the DTC. TEST the system for normal operation. |
| **E2: CHECK THROTTLE CONTROL + CIRCUIT FOR CONTINUITY** | |
| | 1 Measure the resistance between ECM electrical connector PI001, pin 080 (GW) and throttle motor electrical connector PI018, pin 001 (GW) |
| | Is the resistance less than 5 ohms?<br>**Yes**<br>INSTALL a new ECM. REFER to Section 303-14A Electronic Engine Controls / 303-14B Electronic Engine Controls / 303-14C Electronic Engine Controls.CLEAR the DTC. TEST the system for normal operation.<br>**No**<br>REPAIR the circuit between ECM electrical connector PI001, pin 080 (GW) and throttle motor electrical connector PI018, pin 001 (GW) For additional information, refer to wiring diagrams. CLEAR the DTC. TEST the system for normal operation. |

## PINPOINT TEST F : CHECK THROTTLE POSITION (TP) SENSOR: P0121, P0122, P0123, P0222, P0223

• NOTE: Check sensor supply and ground circuits before commencing this test. REFER to Section 303-14A Electronic Engine Controls / 303-14B Electronic Engine Controls / 303-14C Electronic Engine Controls.

| TEST CONDITIONS | DETAILS/RESULTS/ACTIONS |
|---|---|
| **F1: CHECK THROTTLE POSITION SENSOR RESISTANCE. SENSOR 1** | |
| | 1 Disconnect the throttle position sensor electrical connector, PI026. |
| | 2 Measure the resistance between pins 001 and 003 of the TP sensor. |
| | Is the resistance 500 to 900 ohms?<br>**Yes**<br>GO to F2.<br>**No**<br>INSTALL a new throttle body.<br>REFER to Throttle Body in this section.<br>CLEAR the DTC. TEST the system for normal operation. |
| **F2: CHECK THROTTLE POSITION SENSOR RESISTANCE. SENSOR 2** | |
| | 1 Measure the resistance between pins 001 and 002 of the TP sensor. |
| | Is the resistance 1200 to 1600 ohms?<br>**Yes**<br>GO to Pinpoint Test G.<br>**No**<br>INSTALL a new throttle body.<br>REFER to Throttle Body in this section.<br>CLEAR the DTC. TEST the system for normal operation. |

## PINPOINT TEST G : CHECK THROTTLE MOTOR RELAY: P1251, P1631, P1657, P1658

| TEST CONDITIONS | DETAILS/RESULTS/ACTIONS |
|---|---|
| **G1: CHECK THROTTLE MOTOR RELAY CONSTANT SUPPLY** | |
| | 1 Remove the throttle motor relay. |
| | 2 Measure the voltage between the throttle motor relay base, pin 003 and GROUND. |
| | Is the voltage greater than 10 volts?<br>**Yes**<br>GO to G2.<br>**No**<br>REPAIR the circuit between the throttle motor relay base, pin 003 and the battery. This circuit includes the power distribution fuse box, fuse 18. For additional information, refer to wiring diagrams. CLEAR the DTC. TEST the system for normal operation. |
| **G2: CHECK THROTTLE MOTOR RELAY EMS SWITCHED SUPPLY** | |
| | 1 Turn the ignition switch to the ON position. |
| | 2 Measure the voltage between the throttle motor relay base, pin 001 and GROUND. |

GETtheMANUALS.org

| | |
|---|---|
| | Is the voltage greater than 10 volts?<br>**Yes**<br>GO to G3.<br>**No**<br>REPAIR the circuit between the throttle motor relay base, pin 001 and the battery. This circuit includes the power distribution fuse box, fuses 36, 9, and 31, and the EMS control relay. CLEAR the DTC. TEST the system for normal operation. |
| **G3: CHECK THROTTLE MOTOR RELAY TO ECM CIRCUIT FOR CONTINUITY** | |
| | 1 Remove the throttle motor relay. |
| | 2 Disconnect the ECM electrical connector, PI001. |
| | 3 Measure the resistance between PI001, pin 052 (GR) and throttle motor relay base, pin 002. |
| | Is the resistance less than 5 ohms?<br>**Yes**<br>GO to G4.<br>**No**<br>REPAIR the circuit between PI001, pin 052 (GR) and throttle motor relay base, pin 002. For additional information, refer to wiring digrams. CLEAR the DTC. TEST the system for normal operation. |
| **G4: CHECK THROTTLE MOTOR RELAY OUTPUT TO ECM** | |
| | 1 INSTALL the throttle motor relay. |
| | 2 Turn the ignition switch to the ON position. |
| | 3 Measure the voltage between PI001, pin 134, (GU) and GROUND. |
| | Is the voltage greater than 10 volts?<br>**Yes**<br>INSTALL a new ECM. REFER to Section 303-14A Electronic Engine Controls / 303-14B Electronic Engine Controls / 303-14C Electronic Engine Controls. Before replacing a ECM, contact Dealer technical support.<br>**No**<br>INSTALL a new throttle motor relay. For additional information, refer to the electrical guide. CLEAR the DTC. TEST the system for normal operation. |

## PINPOINT TEST H : CHECK SECONDARY FUEL PUMP DRIVER INPUT CIRCUITS (S/C ONLY): P1233

| TEST CONDITIONS | DETAILS/RESULTS/ACTIONS |
|---|---|
| **H1: CHECK POWER SUPPLY TO THE SECONDARY FUEL PUMP MODULE** | |
| | 1 Disconnect the secondary fuel pump module electrical connector, CA283. |
| | 2 Turn the ignition switch to the ON position. |
| | 3 Measure the voltage between CA283, pin 029 (UY) and GROUND. |
| | Is the voltage greater than 10 volts?<br>**Yes**<br>GO to H2.<br>**No**<br>REPAIR the circuit between the fuel pump and the battery. This circuit includes fuse 49, the fuel pump relay, and fuse 23. For additional information, refer to wiring diagrams. CLEAR the DTC. TEST the system for normal operation. |
| **H2: CHECK POWER SUPPLY TO THE SECONDARY FUEL PUMP** | |
| | 1 Reconnect the secondary fuel pump module electrical connector, CA283. |
| | 2 Disconnect the secondary fuel pump electrical connector, FP003. |
| | 3 Turn the ignition switch to the ON position. |
| | 4 Measure the voltage between FP003, pin 002 (R) and GROUND. |
| | Is the voltage greater than 10 volts?<br>**Yes**<br>GO to H4.<br>**No**<br>GO to H3. |
| **H3: CHECK POWER SUPPLY CIRCUIT TO THE SECONDARY FUEL PUMP FOR OPEN CIRCUIT** | |
| | 1 Disconnect the secondary fuel pump module electrical connector, CA283. |
| | 2 Measure the resistance between CA283, pin 010 (R) and FP003, pin 002 (R). |
| | Is the resistance greater than 5 ohms?<br>**Yes**<br>REPAIR the circuit between CA283, pin 010 (R) and FP003, pin 002 (R). For additional information, refer to wiring diagrams. CLEAR the DTC. TEST the system for normal operation.<br>**No**<br>INSTALL a new secondary fuel pump module. CLEAR the DTC. TEST the system for normal operation. |
| **H4: CHECK THE GROUND CIRCUIT TO THE SECONDARY FUEL PUMP MODULE** | |
| | 1 Measure the resistance between secondary fuel pump module electrical connector, CA283, pin 002 (B) and GROUND. |
| | Is the resistance greater than 5 ohms?<br>**Yes**<br>REPAIR the circuit between secondary fuel pump module electrical connector, CA283, pin 002 (B) and GROUND. For additional information, refer to wiring digrams. CLEAR the DTC. TEST the system for normal operation.<br>**No**<br>GO to H5. |
| **H5: CHECK THE SECONDARY FUEL PUMP RESISTANCE** | |
| | 1 Measure the resistance between pins 002 and 004 of the secondary fuel pump. |
| | Is the resistance less than 2 ohms?<br>**Yes**<br>GO to H6.<br>**No**<br>INSTALL a new secondary fuel pump.<br>REFER to Section 310-01 Fuel Tank and Lines.<br>CLEAR the DTC. TEST the system for normal operation. |
| **H6: CHECK MONITOR CIRCUITS FOR OPEN CIRCUIT/HIGH RESISTANCE** | |
| | 1 Disconnect the secondary fuel pump module electrical connnector, CA283 |
| | 2 Disconnect the ECM electrical connector, PI001. |
| | 3 Measure the resistance between PI001, pin 011 (Y) and CA283, pin 007 (Y). |
| | Is the resistance greater than 5 ohms?<br>**Yes**<br>REPAIR the circuit between PI001, pin 011 (Y) and CA283, pin 007 (Y). For additional information, refer to wiring diagrams. CLEAR the DTC. TEST the system for normal operation. |

GETtheMANUALS.org

| | |
|---|---|
| | **No**<br>INSTALL a new secondary fuel pump module. If the DTC is repeated, INSTALL a new ECM. REFER to Section 303-14A Electronic Engine Controls / 303-14B Electronic Engine Controls / 303-14C Electronic Engine Controls. Before replacing a ECM, contact Dealer technical support. |

| PINPOINT TEST I : CHECK SECONDARY FUEL PUMP DRIVER OUTPUT CIRCUITS (S/C ONLY): P3705 | |
|---|---|
| **TEST CONDITIONS** | **DETAILS/RESULTS/ACTIONS** |
| **I1: CHECK POWER SUPPLY TO THE SECONDARY FUEL PUMP** | |
| | 1 Disconnect the secondary fuel pump electrical connector, FP003. |
| | 2 Turn the ignition switch to the ON position. |
| | 3 Measure the voltage between FP003, pin 002 (R) and GROUND. |
| | Is the voltage greater than 10 volts?<br>**Yes**<br>GO to I4.<br>**No**<br>GO to I2. |
| **I2: CHECK POWER SUPPLY TO THE SECONDARY FUEL PUMP MODULE** | |
| | 1 Disconnect the secondary fuel pump module electrical connector, CA283. |
| | 2 Turn the ignition switch to the ON position. |
| | 3 Measure the voltage between CA283, pin 029 (UY) and GROUND. |
| | Is the voltage greater than 10 volts?<br>**Yes**<br>GO to I4.<br>**No**<br>REPAIR the circuit between the fuel pump and the battery. This circuit includes fuse 49, the fuel pump relay, and fuse 23. For additional information, refer to wiring diagrams. CLEAR the DTC. TEST the system for normal operation. |
| **I3: CHECK THE SECONDARY FUEL PUMP RESISTANCE** | |
| | 1 Measure the resistance between pins 002 and 004 of the secondary fuel pump. |
| | Is the resistance less than 2 ohms?<br>**Yes**<br>GO to I4.<br>**No**<br>INSTALL a new secondary fuel pump.<br>REFER to Section 310-01 Fuel Tank and Lines.<br>CLEAR the DTC. TEST the system for normal operation. |
| **I4: CHECK SIGNAL CIRCUIT TO THE SECONDARY FUEL PUMP FOR OPEN CIRCUIT** | |
| | 1 Measure the resistance between CA283, pin 003 (Y) and FP003, pin 004 (Y). |
| | Is the resistance greater than 5 ohms?<br>**Yes**<br>REPAIR the circuit between CA283, pin 003 (Y) and FP003, pin 004 (Y). For additional information, refer to wiring diagrams. CLEAR the DTC. TEST the system for normal operation.<br>**No**<br>INSTALL a new secondary fuel pump module. CLEAR the DTC. TEST the system for normal operation. |

| PINPOINT TEST J : CHECK SECONDARY FUEL PUMP DRIVER INPUT CIRCUITS FOR SHORT TO HIGH/LOW (S/C ONLY): P1339 | |
|---|---|
| **TEST CONDITIONS** | **DETAILS/RESULTS/ACTIONS** |
| **J1: CHECK SECONDARY FUEL PUMP DRIVER INPUT CIRCUIT FOR SHORT TO BATTERY** | |
| | 1 Disconnect the ECM electrical connector, PI001. |
| | 2 Measure the voltage between PI001, pin 011 (Y) and GROUND. |
| | Is the voltage greater than 1 volt?<br>**Yes**<br>REPAIR the short circuit. For additional information, refer to wiring diagrams. CLEAR the DTC. TEST the system for normal operation.<br>**No**<br>GO to J2. |
| **J2: CHECK SECONDARY FUEL PUMP DRIVER INPUT CIRCUIT FOR SHORT TO GROUND** | |
| | 1 Measure the resistance between PI001, pin 011 (Y) and GROUND. |
| | Is the resistance less than 10,000 ohms?<br>**Yes**<br>REPAIR the short circuit. For additional information, refer to wiring diagrams. CLEAR the DTC. TEST the system for normal operation.<br>**No**<br>GO to J3. |
| **J3: CHECK SECONDARY FUEL PUMP DRIVER INPUT CIRCUIT FOR CONTINUITY** | |
| | 1 Disconnect the secondary fuel pump module electrical connector, CA283. |
| | 2 Measure the resistance between CA283, pin 007 (Y) and PI001, pin 011 (Y). |
| | Is the resistance greater than 5 ohms?<br>**Yes**<br>REPAIR the circuit between CA283, pin 007 (Y) and PI001, pin 011 (Y). For additional information, refer to wiring diagrams. CLEAR the DTC. TEST the system for normal operation.<br>**No**<br>INSTALL a new secondary fuel pump module. If the DTC is repeated, INSTALL a new ECM. REFER to Section 303-14A Electronic Engine Controls / 303-14B Electronic Engine Controls / 303-14C Electronic Engine Controls. Before replacing a ECM, contact Dealer technical support. |

GETtheMANUALS.org

# Fuel Charging and Controls - V8 4.2L Petrol / V8 S/C 4.2L Petrol - Fuel Injection Supply Manifold

Removal and Installation

## Removal

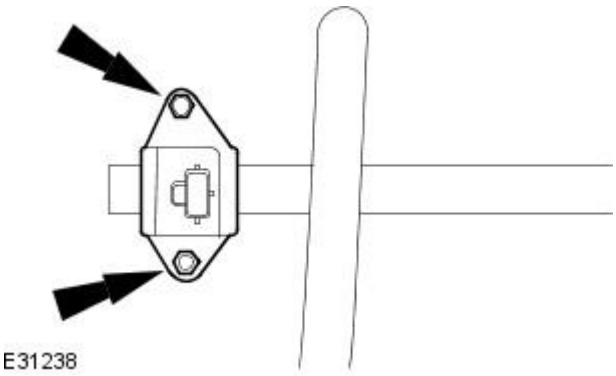


**1.** CAUTION: Do not smoke or carry lighted tobacco or open flame of any type when working on or near any fuel related components. Highly flammable vapors are always present and may ignite. Failure to follow these instructions can result in personal injury.

Remove the fuel injection supply manifold.
For additional information, refer to Fuel Injectors in this section.

**2.** Detach the fuel pressure regulator.

- Remove the securing bolts.
- Remove and discard the O-rings.

## Installation

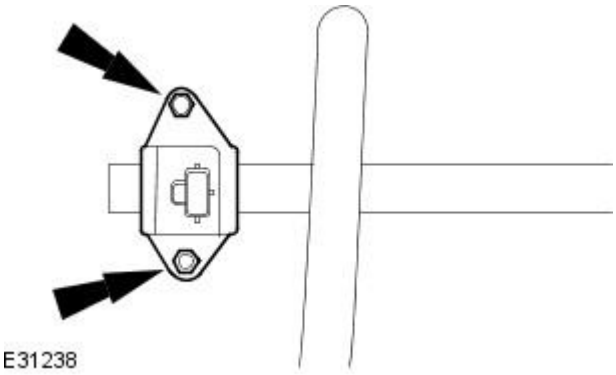


**1.** CAUTION: Do not smoke or carry lighted tobacco or open flame of any type when working on or near any fuel related components. Highly flammable vapors are always present and may ignite. Failure to follow these instructions can result in personal injury.

To install, reverse removal procedure.

- Install new fuel pressure regulator O-rings. Lubricate the O-ring seals with clean engine oil to aid installation.
- Tighten to 5 Nm.

GETtheMANUALS.org

# Fuel Charging and Controls - V8 4.2L Petrol/V8 S/C 4.2L Petrol - Fuel Charging and ControlsVIN Range: N52048->N99999

Diagnosis and Testing

## Overview

There are changes to the engine management system (EMS) for 2006 my, the most obvious of which will be the change to 7-digit diagnostic trouble codes (DTCs) from the familiar 5-digit.

Refer to the DTC index in this section for guidance on how to use these codes with the Jaguar approved diagnostic system or a scan tool.

## Inspection and Verification

1. **1.** Verify the customer concern.
2. **2.** Visually inspect for obvious signs of mechanical or electrical damage.

**Visual inspection**

| Mechanical | Electrical |
|---|---|
| • Fuel leaks<br>• Damaged fuel lines<br>• Damaged push connect fittings<br>• Fuel level<br>• Fuel contamination/grade/quality<br>• Throttle body<br>• Damaged fuel tank filler pipe cap<br>• Damaged fuel tank filler pipe | • Fuses<br>• Inertia switch<br>• Loose or corroded electrical connectors<br>• Harnesses<br>• Sensor(s)<br>• Engine control module (ECM) |

3. **3.** If an obvious cause for an observed or reported concern is found, correct the cause (if possible) before proceeding to the next step.
4. **4.** If the cause is not visually evident use the Jaguar approved diagnostic system or a scan tool to retrieve the fault codes before proceeding to the diagnostic trouble code (DTC) Index.

## Symptom Chart

| Symptom | Possible source | Action |
|---|---|---|
| Engine cranks, but does not fire | • Engine breather system disconnected/restricted<br>• Ignition system<br>• Fuel system<br>• Harness<br>• Crankshaft position (CKP) sensor<br>• ECM fault | Check the engine breather system,<br>REFER to: Engine Emission Control - VIN Range: N80181->R99999 (303-08A Engine Emission Control - V8 4.2L Petrol/V8 S/C 4.2L Petrol/2.5L NA V6 - AJV6/3.0L NA V6 - AJ27, Diagnosis and Testing).<br>For ignition system tests,<br>REFER to: Engine Ignition - VIN Range: N52048->N99999 (303-07B Engine Ignition - V8 4.2L Petrol/V8 S/C 4.2L Petrol, Diagnosis and Testing).<br>Check the fuel pressure,<br>REFER to: Fuel Tank and Lines - V8 4.2L Petrol/V8 S/C 4.2L Petrol/2.5L NA V6 - AJV6/3.0L NA V6 - AJ27, VIN Range: N80181->R99999 (310-01 Fuel Tank and Lines, Diagnosis and Testing).<br>For CKP tests,<br>REFER to: Electronic Engine Controls - VIN Range: N80181->R99999 (303-14B Electronic Engine Controls - V8 4.2L Petrol/V8 S/C 4.2L Petrol, Diagnosis and Testing).<br>Refer to the warranty policy and procedures manual if an ECM is suspect. |
| Engine cranks and fires, but will not start | • Evaporative emissions purge valve<br>• Fuel pump<br>• Spark plugs<br>• HT short to ground (tracking) check rubber boots for cracks/damage<br>• Ignition coil failure(s)<br>• Harness | For purge valve tests,<br>REFER to: Engine Emission Control - VIN Range: N80181->R99999 (303-08A Engine Emission Control - V8 4.2L Petrol/V8 S/C 4.2L Petrol/2.5L NA V6 - AJV6/3.0L NA V6 - AJ27, Diagnosis and Testing).<br>Check the fuel pressure,<br>REFER to: Fuel Tank and Lines - V8 4.2L Petrol/V8 S/C 4.2L Petrol/2.5L NA V6 - AJV6/3.0L NA V6 - AJ27, VIN Range: N80181->R99999 (310-01 Fuel Tank and Lines, Diagnosis and Testing).<br>For ignition system tests,<br>REFER to: Engine Ignition - VIN Range: N52048->N99999 (303-07B Engine Ignition - V8 4.2L Petrol/V8 S/C 4.2L Petrol, Diagnosis and Testing). |
| Difficult to start cold | • Check coolant anti-freeze content<br>• Battery<br>• CKP sensor<br>• Exhaust gas recirculation (EGR) valve stuck open<br>• Fuel pump<br>• Purge valve | Check the engine coolant level and condition. For battery information,<br>REFER to: Battery (414-01 Battery, Mounting and Cables, Diagnosis and Testing).<br>For CKP sensor tests,<br>REFER to: Electronic Engine Controls - VIN Range: N80181->R99999 (303-14B Electronic Engine Controls - V8 4.2L Petrol/V8 S/C 4.2L Petrol, Diagnosis and Testing).<br>For EGR system information,<br>REFER to: Engine Emission Control - VIN Range: N80181->R99999 (303-08A Engine Emission Control - V8 4.2L Petrol/V8 S/C 4.2L Petrol/2.5L NA V6 - AJV6/3.0L NA V6 - AJ27, Diagnosis and Testing).<br>Check the fuel pressure,<br>REFER to: Fuel Tank and Lines - V8 4.2L Petrol/V8 S/C 4.2L Petrol/2.5L NA V6 - AJV6/3.0L NA V6 - AJ27, VIN Range: N80181->R99999 (310-01 Fuel Tank and Lines, Diagnosis and |

GETtheMANUAL.org

| Symptom | Possible source | Action |
|---|---|---|
| | | Testing).<br>For purge valve tests,<br>REFER to: Evaporative Emissions - VIN Range: N52048->N99999 (303-13 Evaporative Emissions, Diagnosis and Testing). |
| Difficult to start hot | • Injector leak<br>• Engine fuel temperature (EFT) sensor<br>• Intake air temperature (IAT) sensor<br>• Mass air flow (MAF) sensor<br>• Purge valve<br>• Fuel pump<br>• Ignition system<br>• EGR valve stuck open | For fuel injector information,<br>REFER to: Fuel Injectors (303-04B Fuel Charging and Controls - V8 4.2L Petrol/V8 S/C 4.2L Petrol, Removal and Installation).<br>For EFT, IAT and MAF sensor tests,<br>REFER to: Electronic Engine Controls - VIN Range: N80181->R99999 (303-14B Electronic Engine Controls - V8 4.2L Petrol/V8 S/C 4.2L Petrol, Diagnosis and Testing).<br>For purge valve tests,<br>REFER to: Evaporative Emissions - VIN Range: N52048->N99999 (303-13 Evaporative Emissions, Diagnosis and Testing).<br>Check the fuel pressure,<br>REFER to: Fuel Tank and Lines - V8 4.2L Petrol/V8 S/C 4.2L Petrol/2.5L NA V6 - AJV6/3.0L NA V6 - AJ27, VIN Range: N80181->R99999 (310-01 Fuel Tank and Lines, Diagnosis and Testing).<br>For ignition system tests,<br>REFER to: Engine Ignition - VIN Range: N52048->N99999 (303-07B Engine Ignition - V8 4.2L Petrol/V8 S/C 4.2L Petrol, Diagnosis and Testing).<br>For EGR system information,<br>REFER to: Engine Emission Control - VIN Range: N80181->R99999 (303-08A Engine Emission Control - V8 4.2L Petrol/V8 S/C 4.2L Petrol/2.5L NA V6 - AJV6/3.0L NA V6 - AJ27, Diagnosis and Testing). |
| Difficult to start after hot soak (vehicle standing after engine has reached operating temperature) | • Injector leak<br>• EFT sensor<br>• IAT sensor<br>• MAF sensor<br>• Purge valve<br>• Fuel pump<br>• Ignition system<br>• EGR valve stuck open | For fuel injector information,<br>REFER to: Fuel Injectors (303-04B Fuel Charging and Controls - V8 4.2L Petrol/V8 S/C 4.2L Petrol, Removal and Installation).<br>For EFT, IAT and MAF sensor tests,<br>REFER to: Electronic Engine Controls - VIN Range: N80181->R99999 (303-14B Electronic Engine Controls - V8 4.2L Petrol/V8 S/C 4.2L Petrol, Diagnosis and Testing).<br>For purge valve tests,<br>REFER to: Evaporative Emissions - VIN Range: N52048->N99999 (303-13 Evaporative Emissions, Diagnosis and Testing).<br>Check the fuel pressure,<br>REFER to: Fuel Tank and Lines - V8 4.2L Petrol/V8 S/C 4.2L Petrol/2.5L NA V6 - AJV6/3.0L NA V6 - AJ27, VIN Range: N80181->R99999 (310-01 Fuel Tank and Lines, Diagnosis and Testing).<br>For ignition system tests,<br>REFER to: Engine Ignition - VIN Range: N52048->N99999 (303-07B Engine Ignition - V8 4.2L Petrol/V8 S/C 4.2L Petrol, Diagnosis and Testing).<br>For EGR system information,<br>REFER to: Engine Emission Control - VIN Range: N80181->R99999 (303-08A Engine Emission Control - V8 4.2L Petrol/V8 S/C 4.2L Petrol/2.5L NA V6 - AJV6/3.0L NA V6 - AJ27, Diagnosis and Testing). |
| Engine stalls soon after start | • Breather system disconnected/restricted<br>• ECM relay<br>• Harness<br>• MAF sensor<br>• Ignition system<br>• Air filter restricted<br>• Fuel lines<br>• Fuel rail pressure (FRP) sensor<br>• Air leakage | For breather system information,<br>REFER to: Engine Emission Control - VIN Range: N80181->R99999 (303-08A Engine Emission Control - V8 4.2L Petrol/V8 S/C 4.2L Petrol/2.5L NA V6 - AJV6/3.0L NA V6 - AJ27, Diagnosis and Testing).<br>For ECM relay and MAF sensor tests,<br>REFER to: Electronic Engine Controls - VIN Range: N80181->R99999 (303-14B Electronic Engine Controls - V8 4.2L Petrol/V8 S/C 4.2L Petrol, Diagnosis and Testing).<br>For ignition system tests,<br>REFER to: Engine Ignition - VIN Range: N52048->N99999 (303-07B Engine Ignition - V8 4.2L Petrol/V8 S/C 4.2L Petrol, Diagnosis and Testing).<br>For air filter information,<br>REFER to: Intake Air Distribution and Filtering - VIN Range: N52048->N99999 (303-12B Intake Air Distribution and Filtering - V8 4.2L Petrol/V8 S/C 4.2L Petrol, Diagnosis and Testing).<br>For fuel line information,<br>REFER to: Fuel Tank and Lines - V8 4.2L Petrol/V8 S/C 4.2L Petrol/2.5L NA V6 - AJV6/3.0L NA V6 - AJ27, VIN Range: N80181->R99999 (310-01 Fuel Tank and Lines, Diagnosis and Testing).<br>For FRP sensor tests,<br>REFER to: Electronic Engine Controls - VIN Range: N80181->R99999 (303-14B Electronic Engine Controls - V8 4.2L Petrol/V8 S/C 4.2L Petrol, Diagnosis and Testing).<br>For intake system information,<br>REFER to: Intake Air Distribution and Filtering - VIN Range: N52048->N99999 (303-12B Intake Air Distribution and Filtering - V8 4.2L Petrol/V8 S/C 4.2L Petrol, Diagnosis and Testing). |
| Engine hesitates/poor acceleration | • Fuel pump<br>• Injector leak<br>• Fuel pressure<br>• Fuel lines<br>• Air leakage<br>• Throttle position (TP) sensors | Check the fuel pressure, check the fuel lines,<br>REFER to: Fuel Tank and Lines - V8 4.2L Petrol/V8 S/C 4.2L Petrol/2.5L NA V6 - AJV6/3.0L NA V6 - AJ27, VIN Range: N80181->R99999 (310-01 Fuel Tank and Lines, Diagnosis and Testing).<br>For intake system, |

GETtheMANUALs.org

| Symptom | Possible source | Action |
|---|---|---|
| | • Throttle motor<br>• Ignition system<br>• EGR valve stuck open<br>• HO2 sensors<br>• Transmission malfunction<br>• Restricted pedal travel (carpet, etc)<br>• Accelerator pedal position (APP) sensor | REFER to: Intake Air Distribution and Filtering - VIN Range: N52048->N99999 (303-12B Intake Air Distribution and Filtering - V8 4.2L Petrol/V8 S/C 4.2L Petrol, Diagnosis and Testing).<br>For TP sensor and throttle motor tests,<br>REFER to: Electronic Engine Controls - VIN Range: N80181->R99999 (303-14B Electronic Engine Controls - V8 4.2L Petrol/V8 S/C 4.2L Petrol, Diagnosis and Testing).<br>For ignition system tests,<br>REFER to: Engine Ignition - VIN Range: N52048->N99999 (303-07B Engine Ignition - V8 4.2L Petrol/V8 S/C 4.2L Petrol, Diagnosis and Testing).<br>For EGR system information,<br>REFER to: Engine Emission Control - VIN Range: N80181->R99999 (303-08A Engine Emission Control - V8 4.2L Petrol/V8 S/C 4.2L Petrol/2.5L NA V6 - AJV6/3.0L NA V6 - AJ27, Diagnosis and Testing).<br>Check for DTCs indicating a faulty HO2 sensor. Refer to the DTC index. For transmission information,<br>REFER to: Diagnostic Strategy - VIN Range: N52048->N99999 (307-01 Automatic Transmission/Transaxle, Diagnosis and Testing).<br>Check the accelerator pedal travel. For APP sensor tests,<br>REFER to: Electronic Engine Controls - VIN Range: N80181->R99999 (303-14B Electronic Engine Controls - V8 4.2L Petrol/V8 S/C 4.2L Petrol, Diagnosis and Testing). |
| Engine backfires | • Fuel pump<br>• Fuel lines<br>• Air leakage<br>• MAF sensor<br>• HO2 sensors<br>• Ignition system<br>• Sticking variable camshaft timing (VCT) hub<br>• APP sensor | Check the fuel pressure, check the fuel lines,<br>REFER to: Fuel Tank and Lines - V8 4.2L Petrol/V8 S/C 4.2L Petrol/2.5L NA V6 - AJV6/3.0L NA V6 - AJ27, VIN Range: N80181->R99999 (310-01 Fuel Tank and Lines, Diagnosis and Testing).<br>For intake system,<br>REFER to: Intake Air Distribution and Filtering - VIN Range: N52048->N99999 (303-12B Intake Air Distribution and Filtering - V8 4.2L Petrol/V8 S/C 4.2L Petrol, Diagnosis and Testing).<br>For MAF sensor tests,<br>REFER to: Electronic Engine Controls - VIN Range: N80181->R99999 (303-14B Electronic Engine Controls - V8 4.2L Petrol/V8 S/C 4.2L Petrol, Diagnosis and Testing).<br>Check for DTCs indicating a faulty HO2 sensor. Refer to the DTC index. For ignition system tests,<br>REFER to: Engine Ignition - VIN Range: N52048->N99999 (303-07B Engine Ignition - V8 4.2L Petrol/V8 S/C 4.2L Petrol, Diagnosis and Testing).<br>Check DTCs for VCT range/performance fault. For VCT tests,<br>REFER to: Electronic Engine Controls - VIN Range: N80181->R99999 (303-14B Electronic Engine Controls - V8 4.2L Petrol/V8 S/C 4.2L Petrol, Diagnosis and Testing).<br>For APP sensor tests,<br>REFER to: Electronic Engine Controls - VIN Range: N80181->R99999 (303-14B Electronic Engine Controls - V8 4.2L Petrol/V8 S/C 4.2L Petrol, Diagnosis and Testing). |
| Engine surges | • Fuel pump<br>• Fuel lines<br>• MAF sensor<br>• Harness<br>• TP sensors<br>• Throttle motor<br>• Ignition system | Check the fuel pressure, check the fuel lines,<br>REFER to: Fuel Tank and Lines - V8 4.2L Petrol/V8 S/C 4.2L Petrol/2.5L NA V6 - AJV6/3.0L NA V6 - AJ27, VIN Range: N80181->R99999 (310-01 Fuel Tank and Lines, Diagnosis and Testing).<br>For MAF, TP sensor and throttle motor tests,<br>REFER to: Electronic Engine Controls - VIN Range: N80181->R99999 (303-14B Electronic Engine Controls - V8 4.2L Petrol/V8 S/C 4.2L Petrol, Diagnosis and Testing).<br>For ignition system tests,<br>REFER to: Engine Ignition - VIN Range: N52048->N99999 (303-07B Engine Ignition - V8 4.2L Petrol/V8 S/C 4.2L Petrol, Diagnosis and Testing). |
| Engine detonates/knocks | • Knock sensor (KS) circuit malfunction<br>• Fuel pump<br>• Fuel lines<br>• FRP sensor<br>• MAF sensor<br>• HO2 sensors<br>• Air leakage<br>• Sticking VCT hub<br>• BARO sensor malfunction (internal ECM fault) | For KS circuit tests,<br>REFER to: Electronic Engine Controls - VIN Range: N80181->R99999 (303-14B Electronic Engine Controls - V8 4.2L Petrol/V8 S/C 4.2L Petrol, Diagnosis and Testing).<br>Check the fuel pressure, check the fuel lines,<br>REFER to: Fuel Tank and Lines - V8 4.2L Petrol/V8 S/C 4.2L Petrol/2.5L NA V6 - AJV6/3.0L NA V6 - AJ27, VIN Range: N80181->R99999 (310-01 Fuel Tank and Lines, Diagnosis and Testing).<br>For FRP, MAF and HO2 sensor tests,<br>REFER to: Electronic Engine Controls - VIN Range: N80181->R99999 (303-14B Electronic Engine Controls - V8 4.2L Petrol/V8 S/C 4.2L Petrol, Diagnosis and Testing).<br>For intake system,<br>REFER to: Intake Air Distribution and Filtering - VIN Range: N52048->N99999 (303-12B Intake Air Distribution and Filtering - V8 4.2L Petrol/V8 S/C 4.2L Petrol, Diagnosis and Testing).<br>Check DTCs for VCT range/performance fault. For VCT tests,<br>REFER to: Electronic Engine Controls - VIN Range: N80181->R99999 (303-14B Electronic Engine Controls - V8 4.2L Petrol/V8 S/C 4.2L Petrol, Diagnosis and Testing).<br>Refer to the warranty policy and procedures manual if an ECM is suspect. |
| No throttle response | • APP sensor malfunction<br>• TP sensors<br>• Throttle motor | For APP, TP sensor and throttle motor tests,<br>REFER to: Electronic Engine Controls - VIN Range: N80181->R99999 (303-14B Electronic Engine Controls - V8 4.2L Petrol/V8 S/C 4.2L Petrol, Diagnosis and Testing). |

GETtheMANUALS.org

| Symptom | Possible source | Action |
|---|---|---|
| Poor throttle response | • APP sensor malfunction<br>• TP sensors<br>• ECT sensor<br>• MAF sensor<br>• Transmission malfunction<br>• Traction control event<br>• Air leakage<br>• Breather system disconnected/restricted | For APP, TP, ECT and MAF sensor tests,<br>REFER to: Electronic Engine Controls - VIN Range: N80181->R99999 (303-14B Electronic Engine Controls - V8 4.2L Petrol/V8 S/C 4.2L Petrol, Diagnosis and Testing).<br>For transmission information,<br>REFER to: Diagnostic Strategy - VIN Range: N52048->N99999 (307-01 Automatic Transmission/Transaxle, Diagnosis and Testing).<br>For intake system,<br>REFER to: Intake Air Distribution and Filtering - VIN Range: N52048->N99999 (303-12B Intake Air Distribution and Filtering - V8 4.2L Petrol/V8 S/C 4.2L Petrol, Diagnosis and Testing).<br>For breather system information,<br>REFER to: Electronic Engine Controls - VIN Range: N80181->R99999 (303-14B Electronic Engine Controls - V8 4.2L Petrol/V8 S/C 4.2L Petrol, Diagnosis and Testing). |

## DTC index

• NOTE: Generic scan tools may not read the codes listed, or may read only 5-digit codes. Match the 5 digits from the scan tool to the first 5 digits of the 7-digit code listed to identify the fault (the last 2 digits give extra information read by the manufacturer-approved diagnostic system).

| DTC | Description | Possible Causes | Action |
|---|---|---|---|
| P008700 | Fuel rail/system pressure - too low | • FRP sensor disconnected<br>• FRP sensor to ECM sensing circuit: open circuit or short circuit to ground<br>• FRP sensor supply circuit: high resistance<br>• FRP sensor failure<br>• Fuel pump failure<br>• Fuel line leak<br>• Restricted fuel line | For FRP sensor circuit tests,<br>REFER to: Electronic Engine Controls - VIN Range: N80181->R99999 (303-14B Electronic Engine Controls - V8 4.2L Petrol/V8 S/C 4.2L Petrol, Diagnosis and Testing).<br>For fuel pump circuit and fuel line tests,<br>REFER to: Fuel Tank and Lines - V8 4.2L Petrol/V8 S/C 4.2L Petrol/2.5L NA V6 - AJV6/3.0L NA V6 - AJ27, VIN Range: N80181->R99999 (310-01 Fuel Tank and Lines, Diagnosis and Testing). |
| P008800 | Fuel rail/system pressure - too high | • FRP sensor to ECM wiring (supply/sense): short circuit to each other<br>• FRP sensor to ECM sense circuit: short circuit to high voltage<br>• FRP sensor ground circuit: high resistance<br>• FRP sensor failure<br>• Restricted fuel line<br>• Fuel pump short circuit to battery | For FRP sensor tests,<br>REFER to: Electronic Engine Controls - VIN Range: N80181->R99999 (303-14B Electronic Engine Controls - V8 4.2L Petrol/V8 S/C 4.2L Petrol, Diagnosis and Testing).<br>For fuel pump circuit and fuel line tests,<br>REFER to: Fuel Tank and Lines - V8 4.2L Petrol/V8 S/C 4.2L Petrol/2.5L NA V6 - AJV6/3.0L NA V6 - AJ27, VIN Range: N80181->R99999 (310-01 Fuel Tank and Lines, Diagnosis and Testing). |
| P017100 | System too lean (right hand bank) | • Air intake leak between MAF sensor and cylinder head<br>• Fuel filter/system restriction<br>• Low fuel pressure<br>• Fuel injector restriction<br>• MAF sensor fault (low intake air flow)<br>• Exhaust leak (before catalyst)<br>• Evaporative emission system fault | For intake system information,<br>REFER to: Intake Air Distribution and Filtering - VIN Range: N52048->N99999 (303-12B Intake Air Distribution and Filtering - V8 4.2L Petrol/V8 S/C 4.2L Petrol, Diagnosis and Testing).<br>Check the fuel pressure, check the fuel lines,<br>REFER to: Electronic Engine Controls - VIN Range: N80181->R99999 (303-14B Electronic Engine Controls - V8 4.2L Petrol/V8 S/C 4.2L Petrol, Diagnosis and Testing).<br>For fuel injector information,<br>REFER to: Fuel Injectors (303-04B Fuel Charging and Controls - V8 4.2L Petrol/V8 S/C 4.2L Petrol, Removal and Installation).<br>For MAF sensor circuit tests,<br>REFER to: Electronic Engine Controls - VIN Range: N80181->R99999 (303-14B Electronic Engine Controls - V8 4.2L Petrol/V8 S/C 4.2L Petrol, Diagnosis and Testing).<br>Check the exhaust system (before catalyst) for condition and security,<br>REFER to: Exhaust System - VIN Range: N13089->N99999 (309-00 Exhaust System, Diagnosis and Testing).<br>For evaporative emission system tests,<br>REFER to: Evaporative Emissions - VIN Range: N52048->N99999 (303-13 Evaporative Emissions, Diagnosis and Testing). |
| P017200 | System too rich (right hand bank) | • Restricted air filter<br>• High fuel pressure<br>• Leaking fuel injector(s)<br>• Oil contaminated with fuel (too many cold starts with vehicle subsequently not getting hot enough for long enough)<br>• MAF sensor fault (high intake air flow)<br>• Evaporative emission system fault | For intake system information,<br>REFER to: Intake Air Distribution and Filtering - VIN Range: N52048->N99999 (303-12B Intake Air Distribution and Filtering - V8 4.2L Petrol/V8 S/C 4.2L Petrol, Diagnosis and Testing).<br>Check the fuel pressure,<br>REFER to: Electronic Engine Controls - VIN Range: N80181->R99999 (303-14B Electronic Engine Controls - V8 4.2L Petrol/V8 S/C 4.2L Petrol, Diagnosis and Testing).<br>For fuel injector information,<br>REFER to: Fuel Injectors (303-04B Fuel Charging and Controls - V8 4.2L Petrol/V8 S/C 4.2L Petrol, Removal and Installation).<br>Check the oil condition, if contamination is present, renew the engine oil and filter. For MAF sensor circuit tests,<br>REFER to: Electronic Engine Controls - VIN Range: N80181->R99999 (303-14B Electronic Engine Controls - V8 4.2L Petrol/V8 S/C 4.2L Petrol, Diagnosis and Testing).<br>For evaporative emission system tests,<br>REFER to: Evaporative Emissions - VIN Range: |

GETtheMANUALS.org

| DTC | Description | Possible Causes | Action |
|---|---|---|---|
| | | | N52048->N99999 (303-13 Evaporative Emissions, Diagnosis and Testing). |
| P017400 | System too lean (left hand bank) | • Air intake leak between MAF sensor and cylinder head<br>• Fuel filter/system restriction<br>• Low fuel pressure<br>• Fuel injector restriction<br>• MAF sensor fault (low intake air flow)<br>• Exhaust leak (before catalyst)<br>• Evaporative emission system fault | For intake system information,<br>REFER to: Intake Air Distribution and Filtering - VIN Range: N52048->N99999 (303-12B Intake Air Distribution and Filtering - V8 4.2L Petrol/V8 S/C 4.2L Petrol, Diagnosis and Testing).<br>Check the fuel pressure, check the fuel lines,<br>REFER to: Electronic Engine Controls - VIN Range: N80181->R99999 (303-14B Electronic Engine Controls - V8 4.2L Petrol/V8 S/C 4.2L Petrol, Diagnosis and Testing).<br>For fuel injector information,<br>REFER to: Fuel Injectors (303-04B Fuel Charging and Controls - V8 4.2L Petrol/V8 S/C 4.2L Petrol, Removal and Installation).<br>For MAF sensor circuit tests,<br>REFER to: Electronic Engine Controls - VIN Range: N80181->R99999 (303-14B Electronic Engine Controls - V8 4.2L Petrol/V8 S/C 4.2L Petrol, Diagnosis and Testing).<br>Check the exhaust system (before catalyst) for condition and security,<br>REFER to: Exhaust System - VIN Range: N13089->N99999 (309-00 Exhaust System, Diagnosis and Testing).<br>For evaporative emission system tests,<br>REFER to: Evaporative Emissions - VIN Range: N52048->N99999 (303-13 Evaporative Emissions, Diagnosis and Testing). |
| P017500 | System too rich (left hand bank) | • Restricted air filter<br>• High fuel pressure<br>• Leaking fuel injector(s)<br>• Oil contaminated with fuel (too many cold starts with vehicle subsequently not getting hot enough for long enough)<br>• MAF sensor fault (high intake air flow)<br>• Evaporative emission system fault | For intake system information,<br>REFER to: Intake Air Distribution and Filtering - VIN Range: N52048->N99999 (303-12B Intake Air Distribution and Filtering - V8 4.2L Petrol/V8 S/C 4.2L Petrol, Diagnosis and Testing).<br>Check the fuel pressure,<br>REFER to: Electronic Engine Controls - VIN Range: N80181->R99999 (303-14B Electronic Engine Controls - V8 4.2L Petrol/V8 S/C 4.2L Petrol, Diagnosis and Testing).<br>For fuel injector information,<br>REFER to: Fuel Injectors (303-04B Fuel Charging and Controls - V8 4.2L Petrol/V8 S/C 4.2L Petrol, Removal and Installation).<br>Check the oil condition, if contamination is present, renew the engine oil and filter. For MAF sensor circuit tests,<br>REFER to: Electronic Engine Controls - VIN Range: N80181->R99999 (303-14B Electronic Engine Controls - V8 4.2L Petrol/V8 S/C 4.2L Petrol, Diagnosis and Testing).<br>For evaporative emission system tests,<br>REFER to: Evaporative Emissions - VIN Range: N52048->N99999 (303-13 Evaporative Emissions, Diagnosis and Testing). |
| P020100 | Cylinder 1 injector circuit/open | • Injector disconnected<br>• Injector harness wiring: short circuit<br>• Injector failure | For injector circuit tests on vehicles without supercharger, GO to Pinpoint Test A. For injector circuit tests on vehicles with supercharger, GO to Pinpoint Test B. |
| P020200 | Cylinder 2 injector circuit/open | • Injector disconnected<br>• Injector harness wiring: short circuit<br>• Injector failure | For injector circuit tests on vehicles without supercharger, GO to Pinpoint Test A. For injector circuit tests on vehicles with supercharger, GO to Pinpoint Test B. |
| P020300 | Cylinder 3 injector circuit/open | • Injector disconnected<br>• Injector harness wiring: short circuit<br>• Injector failure | For injector circuit tests on vehicles without supercharger, GO to Pinpoint Test A. For injector circuit tests on vehicles with supercharger, GO to Pinpoint Test B. |
| P020400 | Cylinder 4 injector circuit/open | • Injector disconnected<br>• Injector harness wiring: short circuit<br>• Injector failure | For injector circuit tests on vehicles without supercharger, GO to Pinpoint Test A. For injector circuit tests on vehicles with supercharger, GO to Pinpoint Test B. |
| P020500 | Cylinder 5 injector circuit/open | • Injector disconnected<br>• Injector harness wiring: short circuit<br>• Injector failure | For injector circuit tests on vehicles without supercharger, GO to Pinpoint Test A. For injector circuit tests on vehicles with supercharger, GO to Pinpoint Test B. |
| P020600 | Cylinder 6 injector circuit/open | • Injector disconnected<br>• Injector harness wiring: short circuit<br>• Injector failure | For injector circuit tests on vehicles without supercharger, GO to Pinpoint Test A. For injector circuit tests on vehicles with supercharger, GO to Pinpoint Test B. |
| P020700 | Cylinder 7 injector circuit/open | • Injector disconnected<br>• Injector harness wiring: short circuit<br>• Injector failure | For injector circuit tests on vehicles without supercharger, GO to Pinpoint Test A. For injector circuit tests on vehicles with supercharger, GO to Pinpoint Test B. |
| P020800 | Cylinder 8 injector circuit/open | • Injector disconnected<br>• Injector harness wiring: short circuit<br>• Injector failure | For injector circuit tests on vehicles without supercharger, GO to Pinpoint Test A. For injector circuit tests on vehicles with supercharger, GO to Pinpoint Test B. |

GETtheMANUALS.org

| DTC | Description | Possible Causes | Action |
|---|---|---|---|
| P131500 | Persistent misfire | • ECM to ignition coil primary circuit fault (cylinder misfire detected DTC also flagged)<br>• Fuel delivery pressure low<br>• Fuel injector circuit fault(s) (injector DTCs also flagged)<br>• Ignition coil failure<br>• Spark plug failure/fouled/incorrect gap<br>• Cylinder compression low | For ignition coil circuit tests, REFER to: Engine Ignition - VIN Range: N52048->N99999 (303-07B Engine Ignition - V8 4.2L Petrol/V8 S/C 4.2L Petrol, Diagnosis and Testing).<br>Check the fuel pressure, REFER to: Fuel Tank and Lines - V8 4.2L Petrol/V8 S/C 4.2L Petrol/2.5L NA V6 - AJV6/3.0L NA V6 - AJ27, VIN Range: N80181->R99999 (310-01 Fuel Tank and Lines, Diagnosis and Testing).<br>For injector circuit tests on vehicles without supercharger, GO to Pinpoint Test A. For injector circuit tests on vehicles with supercharger, GO to Pinpoint Test B. For spark plug tests, REFER to: Engine Ignition - VIN Range: N52048->N99999 (303-07B Engine Ignition - V8 4.2L Petrol/V8 S/C 4.2L Petrol, Diagnosis and Testing). |
| P131600 | Injector driver misfire - emissions damage | • Injector driver module codes detected | Check for associated DTCs and refer to the DTC index. |
| P210129 | Throttle range/performance - sub-processor | • Jammed throttle blade, gearing or motor | Check for a message in the instrument cluster. Replace the throttle body.<br>REFER to: Throttle Body - Vehicles With: Supercharger, VIN Range: N52048->N99999 (303-04B Fuel Charging and Controls - V8 4.2L Petrol/V8 S/C 4.2L Petrol, Removal and Installation) /<br>Throttle Body - Vehicles Without: Supercharger, VIN Range: N52048->N99999 (303-04B Fuel Charging and Controls - V8 4.2L Petrol/V8 S/C 4.2L Petrol, Removal and Installation). |
| P210164 | Throttle range/performance | • Jammed throttle blade, gearing or motor | Check for a message in the instrument cluster. Replace the throttle body.<br>REFER to: Throttle Body - Vehicles With: Supercharger, VIN Range: N52048->N99999 (303-04B Fuel Charging and Controls - V8 4.2L Petrol/V8 S/C 4.2L Petrol, Removal and Installation) /<br>Throttle Body - Vehicles Without: Supercharger, VIN Range: N52048->N99999 (303-04B Fuel Charging and Controls - V8 4.2L Petrol/V8 S/C 4.2L Petrol, Removal and Installation). |
| P210329 | Throttle actuator motor control circuit high | • Control circuit: short circuit to power<br>• ECM fault | For throttle actuator motor circuit tests on vehicles without supercharger, GO to Pinpoint Test C. For throttle actuator motor circuit tests on vehicles with supercharger, GO to Pinpoint Test D. Refer to the warranty policy and procedures manual if an ECM is suspect. |
| P210364 | Throttle actuator motor control circuit high - signal plausibility failure | • Control circuit: short circuit to power<br>• ECM fault | For throttle actuator motor circuit tests on vehicles without supercharger, GO to Pinpoint Test C. For throttle actuator motor circuit tests on vehicles with supercharger, GO to Pinpoint Test D. Refer to the warranty policy and procedures manual if an ECM is suspect. |
| P210500 | Throttle actuator control system - forced engine shutdown | • Throttle MIL request due to fuel cut | Check for DTCs indicating the reason for the fuel cut. Follow the action indicated for those DTCs. |
| P210629 | Throttle actuator control system - forced limited power | • Signal invalid | Check for a message in the instrument cluster. Replace the throttle body.<br>REFER to: Throttle Body - Vehicles With: Supercharger, VIN Range: N52048->N99999 (303-04B Fuel Charging and Controls - V8 4.2L Petrol/V8 S/C 4.2L Petrol, Removal and Installation) /<br>Throttle Body - Vehicles Without: Supercharger, VIN Range: N52048->N99999 (303-04B Fuel Charging and Controls - V8 4.2L Petrol/V8 S/C 4.2L Petrol, Removal and Installation). |
| P210664 | Throttle actuator control system - forced limited power | • Signal plausibility failure | Check for a message in the instrument cluster. Replace the throttle body.<br>REFER to: Throttle Body - Vehicles With: Supercharger, VIN Range: N52048->N99999 (303-04B Fuel Charging and Controls - V8 4.2L Petrol/V8 S/C 4.2L Petrol, Removal and Installation) /<br>Throttle Body - Vehicles Without: Supercharger, VIN Range: N52048->N99999 (303-04B Fuel Charging and Controls - V8 4.2L Petrol/V8 S/C 4.2L Petrol, Removal and Installation). |
| P211800 | Throttle actuator motor control current range/performance | • Control circuit: short circuit to power, short circuit to ground, high resistance<br>• ECM fault | For throttle actuator motor circuit tests on vehicles without supercharger, GO to Pinpoint Test C. For throttle actuator motor circuit tests on vehicles with supercharger, GO to Pinpoint Test D. Refer to the warranty policy and procedures manual if an ECM is suspect. |
| P211900 | Throttle actuator control throttle body range/performance | • Throttle spring faulty | Check for a message in the instrument cluster. Replace the throttle body.<br>REFER to: Throttle Body - Vehicles With: Supercharger, VIN Range: N52048->N99999 (303-04B Fuel Charging and Controls - V8 4.2L Petrol/V8 S/C 4.2L Petrol, Removal and Installation) /<br>Throttle Body - Vehicles Without: Supercharger, VIN Range: N52048->N99999 (303-04B Fuel Charging and Controls - V8 4.2L Petrol/V8 S/C 4.2L Petrol, Removal and Installation). |

## Pinpoint Tests

CAUTION: When probing connectors to take measurements in the course of the pinpoint tests, use the adaptor kit, part number 3548-1358-00.

• NOTE: When performing electrical voltage or resistance tests, always use a digital multimeter (DMM) accurate to 3 decimal places, and with an up-to-date calibration certificate. When testing resistance, always take the resistance of the DMM leads into account.

GETtheMANUALS.org

• NOTE: Check and rectify basic faults before beginning diagnostic routines involving pinpoint tests.

## PINPOINT TEST A : FUEL INJECTOR CIRCUITS (VEHICLES WITHOUT SUPERCHARGER)

• NOTE: The DTC set will indicate which cylinder injector or circuit is faulty. Only in the event of multiple cylinder misfires will it be necessary to check more than one injector or circuit, in which case, multiple DTCs will be set.

| TEST CONDITIONS | DETAILS/RESULTS/ACTIONS |
|---|---|

### A1: CHECK THE INJECTOR COIL RESISTANCE

1 Disconnect the relevant injector electrical connector:

| Injector connector |
|---|
| Cylinder 1, PI32 |
| Cylinder 2, PI36 |
| Cylinder 3, PI33 |
| Cylinder 4, PI37 |
| Cylinder 5, PI34 |
| Cylinder 6, PI38 |
| Cylinder 7, PI35 |
| Cylinder 8, PI39 |

2 Measure the resistance between the injector pins.

Is the resistance between 12 and 16 ohms?

**Yes**
GO to A2.

**No**
INSTALL a new injector.
REFER to: Fuel Injectors (303-04B Fuel Charging and Controls - V8 4.2L Petrol/V8 S/C 4.2L Petrol, Removal and Installation).
CLEAR the DTC and test the system for normal operation.

### A2: CHECK THE INJECTOR COIL INSULATION

1 Measure the resistance between:

| Injector, component side | Injector body |
|---|---|
| Pin 01 | Injector body |
| Pin 02 | Injector body |

Is either resistance less than 10,000 ohms?

**Yes**
INSTALL a new injector.
REFER to: Fuel Injectors (303-04B Fuel Charging and Controls - V8 4.2L Petrol/V8 S/C 4.2L Petrol, Removal and Installation).
CLEAR the DTC and test the system for normal operation.

**No**
GO to A3.

### A3: CHECK THE INJECTOR SUPPLY VOLTAGE

1 Key on, engine off.

2 Make sure the EMS relay is energized.

3 Measure the voltage between:

| Injector connector, harness side | Battery |
|---|---|
| Pin 02 | Negative terminal |

Is the voltage less than 10 Volts?

**Yes**
REPAIR the circuit between the relevant injector harness electrical connector pin 02 and battery. This circuit includes fuse 13 of the front power distribution box and the EMS relay. For additional information, refer to the wiring diagrams.
CLEAR the DTC and test the system for normal operation.

**No**
GO to A4.

### A4: CHECK THE INJECTOR CONTROL CIRCUIT FOR SHORT CIRCUIT TO GROUND

1 Key off.

2 Measure the resistance between:

| Injector connector, harness side | Battery |
|---|---|
| Pin 01 | Negative terminal |

Is the resistance less than 10,000 ohms?

**Yes**
REPAIR the short circuit. For additional information, refer to the wiring diagrams. CLEAR the DTC and test the system for normal operation.

**No**
GO to A5.

### A5: CHECK THE INJECTOR CONTROL CIRCUIT FOR SHORT CIRCUIT TO POWER

1 Measure the resistance between:

| Injector connector, harness side | Battery |
|---|---|
| Pin 01 | Positive terminal |

Is the resistance less than 10,000 ohms?

**Yes**
REPAIR the short circuit. For additional information, refer to the wiring diagrams. CLEAR the DTC and test the system for normal operation.

**No**
GO to A6.

### A6: CHECK THE INJECTOR CONTROL CIRCUIT FOR HIGH RESISTANCE

• NOTE: The DTC set will indicate which cylinder injector or circuit is faulty. Only in the event of multiple cylinder misfires will it be necessary to check more than one injector or circuit, in which case, multiple DTCs will be set.

1 Disconnect the ECM electrical connector PI300.

2 Measure the resistance between:

| Cylinder 1 injector connector, harness side | ECM connector PI300, harness side |
|---|---|
| PI32, pin 01 | Pin 78 |
| **Cylinder 2 injector connector, harness side** | **ECM connector PI300, harness side** |
| PI36, pin 01 | Pin 79 |
| **Cylinder 3 injector connector, harness side** | **ECM connector PI300, harness side** |
| PI33, pin 01 | Pin 80 |

GETtheMANUALS.org

| Cylinder 4 injector connector, harness side | ECM connector PI300, harness side |
|---|---|
| PI37, pin 01 | Pin 81 |
| **Cylinder 5 injector connector, harness side** | **ECM connector PI300, harness side** |
| PI34, pin 01 | Pin 82 |
| **Cylinder 6 injector connector, harness side** | **ECM connector PI300, harness side** |
| PI38, pin 01 | Pin 83 |
| **Cylinder 7 injector connector, harness side** | **ECM connector PI300, harness side** |
| PI35, pin 01 | Pin 84 |
| **Cylinder 8 injector connector, harness side** | **ECM connector PI300, harness side** |
| PI39, pin 01 | Pin 85 |

Is the resistance greater than 5 ohms?

**Yes**

REPAIR the high resistance circuit. For additional information, refer to the wiring diagrams. CLEAR the DTC and test the system for normal operation.

**No**

INSTALL a new injector.
REFER to: Fuel Injectors (303-04B Fuel Charging and Controls - V8 4.2L Petrol/V8 S/C 4.2L Petrol, Removal and Installation).
CLEAR the DTC and test the system for normal operation.

## PINPOINT TEST B : FUEL INJECTOR CIRCUITS (VEHICLES WITH SUPERCHARGER)

• NOTE: The DTC set will indicate which cylinder injector or circuit is faulty. Only in the event of multiple cylinder misfires will it be necessary to check more than one injector or circuit, in which case, multiple DTCs will be set.

| TEST CONDITIONS | DETAILS/RESULTS/ACTIONS |
|---|---|

### B1: CHECK THE INJECTOR COIL RESISTANCE

1 Disconnect the relevant injector electrical connector:

| Injector connector |
|---|
| Injector Cylinder 1, IS01 |
| Injector Cylinder 2, IS07 |
| Injector Cylinder 3, IS02 |
| Injector Cylinder 4, IS08 |
| Injector Cylinder 5, IS03 |
| Injector Cylinder 6, IS09 |
| Injector Cylinder 7, IS04 |
| Injector Cylinder 8, IS10 |

2 Measure the resistance between the injector pins.

Is the resistance between 12 and 16 ohms?

**Yes**

GO to B2.

**No**

INSTALL a new injector.
REFER to: Fuel Injectors (303-04B Fuel Charging and Controls - V8 4.2L Petrol/V8 S/C 4.2L Petrol, Removal and Installation).
CLEAR the DTC and test the system for normal operation.

### B2: CHECK THE INJECTOR COIL INSULATION

1 Measure the resistance between:

| Injector, component side | Injector body |
|---|---|
| Pin 01 | Injector body |
| Pin 02 | Injector body |

Is either resistance less than 10,000 ohms?

**Yes**

INSTALL a new injector.
REFER to: Fuel Injectors (303-04B Fuel Charging and Controls - V8 4.2L Petrol/V8 S/C 4.2L Petrol, Removal and Installation).
CLEAR the DTC and test the system for normal operation.

**No**

GO to B3.

### B3: CHECK THE INJECTOR SUPPLY VOLTAGE

1 Key on, engine off.

2 Make sure the EMS relay is energized.

3 Measure the voltage between:

| Injector connector, harness side | Battery |
|---|---|
| Pin 02 | Negative terminal |

Is the voltage less than 10 Volts?

**Yes**

REPAIR the circuit between the relevant injector harness electrical connector pin 02 and battery. This circuit includes fuse 13 of the front power distribution box and the EMS relay. For additional information, refer to the wiring diagrams.
CLEAR the DTC and test the system for normal operation.

**No**

GO to B4.

### B4: CHECK THE INJECTOR CONTROL CIRCUIT FOR SHORT CIRCUIT TO GROUND

1 Key off.

2 Measure the resistance between:

| Injector connector, harness side | Battery |
|---|---|
| Pin 01 | Negative terminal |

Is the resistance less than 10,000 ohms?

**Yes**

REPAIR the short circuit. For additional information, refer to the wiring diagrams. CLEAR the DTC and test the system for normal operation.

**No**

GO to B5.

### B5: CHECK THE INJECTOR CONTROL CIRCUIT FOR SHORT CIRCUIT TO POWER

GETtheMANUALS.org

1 Measure the resistance between:

| Injector connector, harness side | Battery |
|---|---|
| Pin 01 | Positive terminal |

Is the resistance less than 10,000 ohms?

**Yes**

REPAIR the short circuit. For additional information, refer to the wiring diagrams. CLEAR the DTC and test the system for normal operation.

**No**

GO to B6.

**B6: CHECK THE INJECTOR CONTROL CIRCUIT FOR HIGH RESISTANCE**

• NOTE: The DTC set will indicate which cylinder injector or circuit is faulty. Only in the event of multiple cylinder misfires will it be necessary to check more than one injector or circuit, in which case, multiple DTCs will be set.

1 Disconnect the ECM electrical connector PI300.

2 Measure the resistance between:

| Cylinder 1 injector connector, harness side | ECM connector PI300, harness side |
|---|---|
| IS01, pin 01 | Pin 78 |
| **Cylinder 2 injector connector, harness side** | **ECM connector PI300, harness side** |
| IS07, pin 01 | Pin 79 |
| **Cylinder 3 injector connector, harness side** | **ECM connector PI300, harness side** |
| IS02, pin 01 | Pin 80 |
| **Cylinder 4 injector connector, harness side** | **ECM connector PI300, harness side** |
| IS08, pin 01 | Pin 81 |
| **Cylinder 5 injector connector, harness side** | **ECM connector PI300, harness side** |
| IS03, pin 01 | Pin 82 |
| **Cylinder 6 injector connector, harness side** | **ECM connector PI300, harness side** |
| IS09, pin 01 | Pin 83 |
| **Cylinder 7 injector connector, harness side** | **ECM connector PI300, harness side** |
| IS04, pin 01 | Pin 84 |
| **Cylinder 8 injector connector, harness side** | **ECM connector PI300, harness side** |
| IS10, pin 01 | Pin 85 |

Is the resistance greater than 5 ohms?

**Yes**

REPAIR the high resistance circuit. For additional information, refer to the wiring diagrams. CLEAR the DTC and test the system for normal operation.

**No**

INSTALL a new injector.

REFER to: Fuel Injectors (303-04B Fuel Charging and Controls - V8 4.2L Petrol/V8 S/C 4.2L Petrol, Removal and Installation).

CLEAR the DTC and test the system for normal operation.

## PINPOINT TEST C : THROTTLE BODY MOTOR CIRCUIT (VEHICLES WITHOUT SUPERCHARGER)

| TEST CONDITIONS | DETAILS/RESULTS/ACTIONS |
|---|---|

**C1: CHECK THE THROTTLE ACTUATOR CONTROL MOTOR SUPPLY CIRCUIT FOR SHORT CIRCUIT TO GROUND**

1 Disconnect the throttle body electrical connector, PI303.

2 Measure the resistance between:

| Throttle body connector PI303, harness side | Battery |
|---|---|
| Pin 05 | Negative terminal |

Is the resistance less than 10,000 ohms?

**Yes**

REPAIR the short circuit. For additional information, refer to the wiring diagrams. CLEAR the DTC and test the system for normal operation.

**No**

GO to C2.

**C2: CHECK THE THROTTLE ACTUATOR CONTROL MOTOR SUPPLY CIRCUIT FOR SHORT CIRCUIT TO POWER**

1 Measure the resistance between:

| Throttle body connector PI303, harness side | Battery |
|---|---|
| Pin 05 | Positive terminal |

Is the resistance less than 10,000 ohms?

**Yes**

REPAIR the short circuit. For additional information, refer to the wiring diagrams. CLEAR the DTC and test the system for normal operation.

**No**

GO to C3.

**C3: CHECK THE THROTTLE ACTUATOR CONTROL MOTOR NEGATIVE CIRCUIT FOR SHORT CIRCUIT TO GROUND**

1 Measure the resistance between:

| Throttle body connector PI303, harness side | Battery |
|---|---|
| Pin 06 | Negative terminal |

Is the resistance less than 10,000 ohms?

**Yes**

REPAIR the short circuit. For additional information, refer to the wiring diagrams. CLEAR the DTC and test the system for normal operation.

**No**

GO to C4.

**C4: CHECK THE THROTTLE ACTUATOR CONTROL MOTOR NEGATIVE CIRCUIT FOR SHORT CIRCUIT TO POWER**

1 Measure the resistance between:

| Throttle body connector PI303, harness side | Battery |
|---|---|
| Pin 06 | Positive terminal |

Is the resistance less than 10,000 ohms?

**Yes**

REPAIR the short circuit. For additional information, refer to the wiring diagrams. CLEAR the DTC and test the system for normal operation.

**No**

GO to C5.

GETtheMANUALS.org

**C5: CHECK THE THROTTLE ACTUATOR CONTROL MOTOR SUPPLY CIRCUIT FOR HIGH RESISTANCE**

1 Disconnect the ECM electrical connector, PI300.

2 Measure the resistance between:

| Throttle body connector PI303, harness side | ECM connector PI300, harness side |
|---|---|
| Pin 05 | Pin 75 |

Is the resistance greater than 5 ohms?

**Yes**

REPAIR the high resistance circuit. For additional information, refer to the wiring diagrams. CLEAR the DTC and test the system for normal operation.

**No**

GO to C6.

**C6: CHECK THE THROTTLE ACTUATOR CONTROL MOTOR NEGATIVE CIRCUIT FOR HIGH RESISTANCE**

1 Measure the resistance between:

| Throttle body connector PI303, harness side | ECM connector PI300, harness side |
|---|---|
| Pin 06 | Pin 74 |

Is the resistance greater than 5 ohms?

**Yes**

REPAIR the high resistance circuit. For additional information, refer to the wiring diagrams. CLEAR the DTC and test the system for normal operation.

**No**

INSTALL a new throttle body assembly

REFER to: Throttle Body - Vehicles Without: Supercharger, VIN Range: N52048->N99999 (303-04B Fuel Charging and Controls - V8 4.2L Petrol/V8 S/C 4.2L Petrol, Removal and Installation).

CLEAR the DTC and test the system for normal operation.

## PINPOINT TEST D : THROTTLE BODY MOTOR CIRCUIT (VEHICLES WITH SUPERCHARGER)

| TEST CONDITIONS | DETAILS/RESULTS/ACTIONS |
|---|---|

**D1: CHECK THE THROTTLE ACTUATOR CONTROL MOTOR SUPPLY CIRCUIT FOR SHORT CIRCUIT TO GROUND**

1 Disconnect the throttle body electrical connector, PI26.

2 Measure the resistance between:

| Throttle body connector PI26, harness side | Battery |
|---|---|
| Pin 01 | Negative terminal |

Is the resistance less than 10,000 ohms?

**Yes**

REPAIR the short circuit. For additional information, refer to the wiring diagrams. CLEAR the DTC and test the system for normal operation.

**No**

GO to D2.

**D2: CHECK THE THROTTLE ACTUATOR CONTROL MOTOR SUPPLY CIRCUIT FOR SHORT CIRCUIT TO POWER**

1 Measure the resistance between:

| Throttle body connector PI26, harness side | Battery |
|---|---|
| Pin 01 | Positive terminal |

Is the resistance less than 10,000 ohms?

**Yes**

REPAIR the short circuit. For additional information, refer to the wiring diagrams. CLEAR the DTC and test the system for normal operation.

**No**

GO to D3.

**D3: CHECK THE THROTTLE ACTUATOR CONTROL MOTOR NEGATIVE CIRCUIT FOR SHORT CIRCUIT TO GROUND**

1 Measure the resistance between:

| Throttle body connector PI26, harness side | Battery |
|---|---|
| Pin 02 | Negative terminal |

Is the resistance less than 10,000 ohms?

**Yes**

REPAIR the short circuit. For additional information, refer to the wiring diagrams. CLEAR the DTC and test the system for normal operation.

**No**

GO to D4.

**D4: CHECK THE THROTTLE ACTUATOR CONTROL MOTOR NEGATIVE CIRCUIT FOR SHORT CIRCUIT TO POWER**

1 Measure the resistance between:

| Throttle body connector PI26, harness side | Battery |
|---|---|
| Pin 02 | Positive terminal |

Is the resistance less than 10,000 ohms?

**Yes**

REPAIR the short circuit. For additional information, refer to the wiring diagrams. CLEAR the DTC and test the system for normal operation.

**No**

GO to D5.

**D5: CHECK THE THROTTLE ACTUATOR CONTROL MOTOR SUPPLY CIRCUIT FOR HIGH RESISTANCE**

1 Disconnect the ECM electrical connector, PI300.

2 Measure the resistance between:

| Throttle body connector PI26, harness side | ECM connector PI300, harness side |
|---|---|
| Pin 01 | Pin 75 |

Is the resistance greater than 5 ohms?

**Yes**

REPAIR the high resistance circuit. For additional information, refer to the wiring diagrams. CLEAR the DTC and test the system for normal operation.

**No**

GO to D6.

**D6: CHECK THE THROTTLE ACTUATOR CONTROL MOTOR NEGATIVE CIRCUIT FOR HIGH RESISTANCE**

1 Measure the resistance between:

| Throttle body connector PI26, harness side | ECM connector PI300, harness side |
|---|---|
| Pin 02 | Pin 74 |

GETtheMANUALS.org

| | |
|---|---|
| | Is the resistance greater than 5 ohms?<br>**Yes**<br>REPAIR the high resistance circuit. For additional information, refer to the wiring diagrams. CLEAR the DTC and test the system for normal operation.<br>**No**<br>INSTALL a new throttle body assembly<br>REFER to: Throttle Body - Vehicles With: Supercharger, VIN Range: N52048->N99999 (303-04B Fuel Charging and Controls - V8 4.2L Petrol/V8 S/C 4.2L Petrol, Removal and Installation).<br>CLEAR the DTC and test the system for normal operation. |

GETtheMANUALS.org

# Fuel Charging and Controls - V8 4.2L Petrol/V8 S/C 4.2L Petrol - Fuel Injectors

Removal and Installation

## Removal

Vehicles with supercharger

1. Remove the charge air coolers. For additional information, refer to Section 303-12A Intake Air Distribution and Filtering / 303-12B Intake Air Distribution and Filtering / 303-12C Intake Air Distribution and Filtering.

Vehicles without supercharger

2. Remove the air outlet tube. For additional information, refer to Section 303-12A Intake Air Distribution and Filtering / 303-12B Intake Air Distribution and Filtering / 303-12C Intake Air Distribution and Filtering.
3. Remove the engine cover bracket.
   - Right hand shown left hand similar.

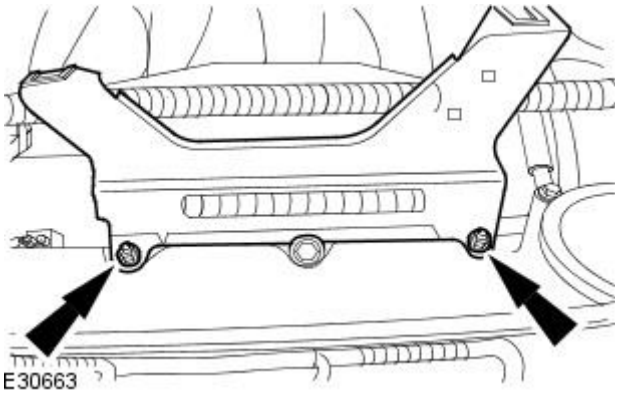


All vehicles

4. Disconnect the fuel line.
   For additional information, refer to Section 310-00 Fuel System - General Information.
5. Disconnect the fuel pressure regulator.
   1. Disconnect the electrical connector.
   2. Detach the vacuum hose.

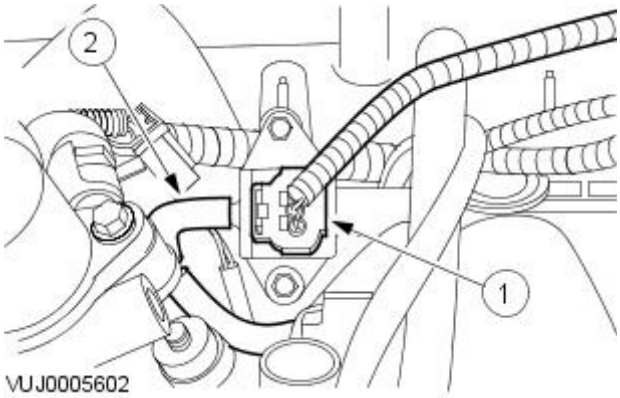


6. Detach the engine wiring harness.
   - Right hand shown left hand similar.

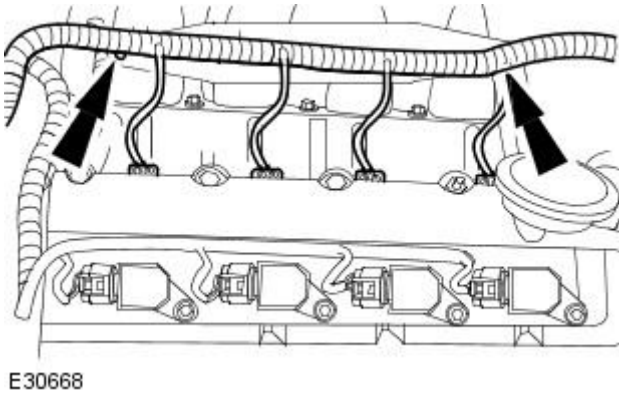


GETtheMANUALS.org

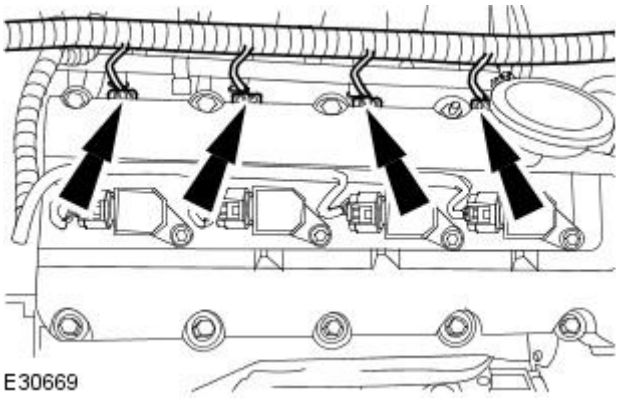


**7.** Disconnect the electrical connectors.

- Right hand shown left hand similar.

Vehicles without supercharger

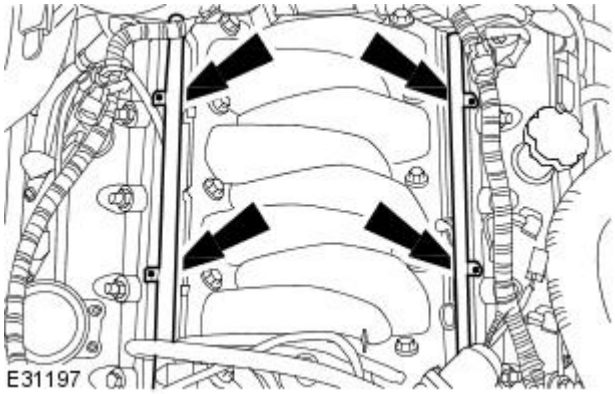


**8.** Remove the fuel injection supply manifold.

Vehicles with supercharger

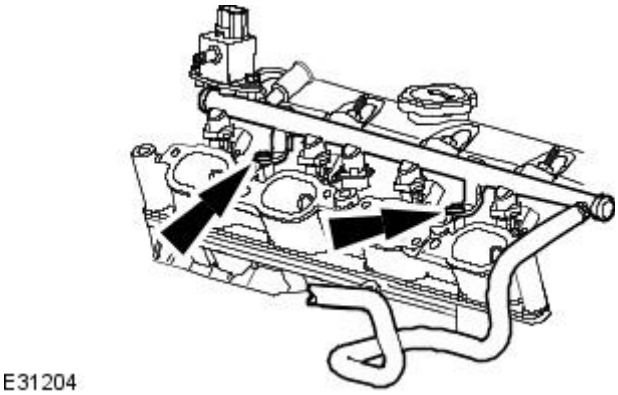


**9.** Remove the fuel injection supply manifold.

- Left hand shown right hand similar.

All vehicles

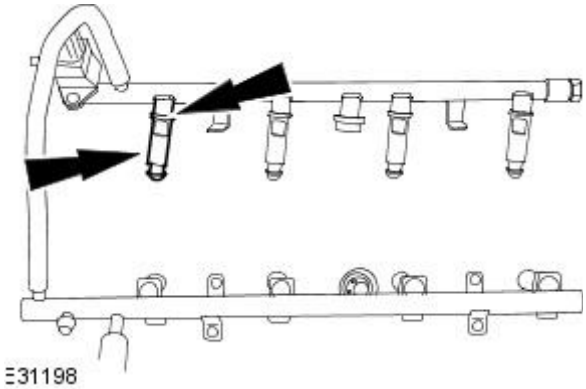


**10.** Remove the fuel injectors.

- Release the retaining clip.
- Remove the fuel injector.

GETtheMANUALS.org

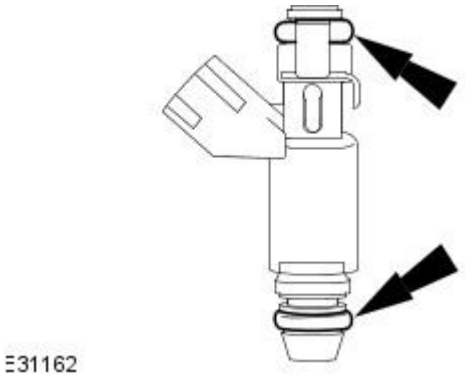


**11.** Remove and discard the O-ring seals.

## Installation

All vehicles

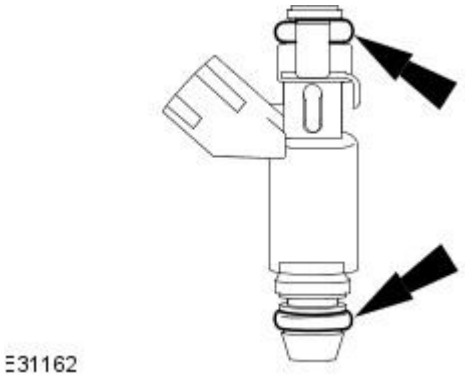


**1.** CAUTION: Do not smoke or carry lighted tobacco or open flame of any type when working on or near any fuel related components. Highly flammable vapors are always present and may ignite. Failure to follow these instructions may result in personal injury.

To install, reverse the removal procedure.

- Install new fuel injector O-ring seals. Lubricate the O-ring seals with clean engine oil to aid installation.

Vehicles with supercharger

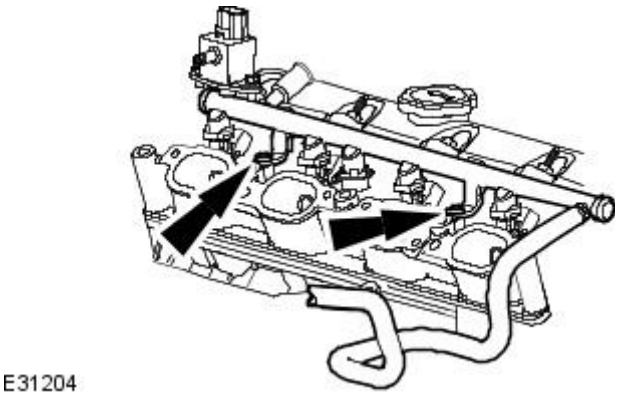


**2.** Tighten to 7 Nm.

Vehicles without supercharger

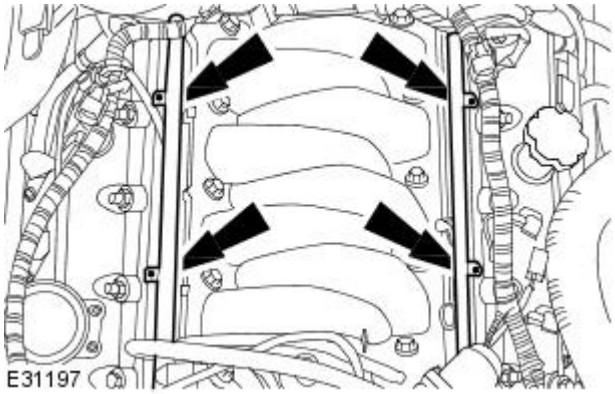


**3.** Tighten to 22 Nm.

GETtheMANUALS.org

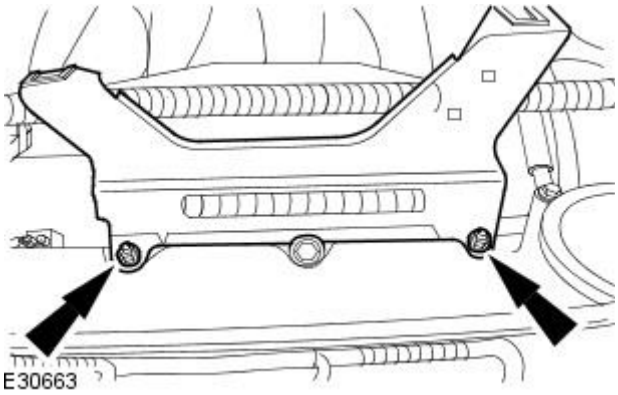


**4.** Tighten to 6 Nm.

GETtheMANUALS.org

# Fuel Charging and Controls - V8 4.2L Petrol / V8 S/C 4.2L Petrol - Fuel Pressure Regulator

Removal and Installation

## Removal

**1.** CAUTION: Do not smoke or carry lighted tobacco or open flame of any type when working on or near any fuel related components. Highly flammable vapors are always present and may ignite. Failure to follow these instructions can result in personal injury.

Depressurize the fuel system.
For additional information, refer to Section 310-00 Fuel System - General Information.

**2.** Disconnect the fuel pressure regulator.

1. Disconnect the electrical connector.
2. Detach the vacuum hose.

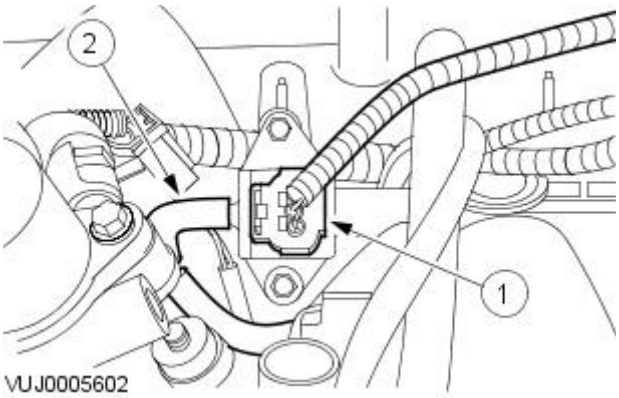


**3.** Remove the fuel pressure regulator.

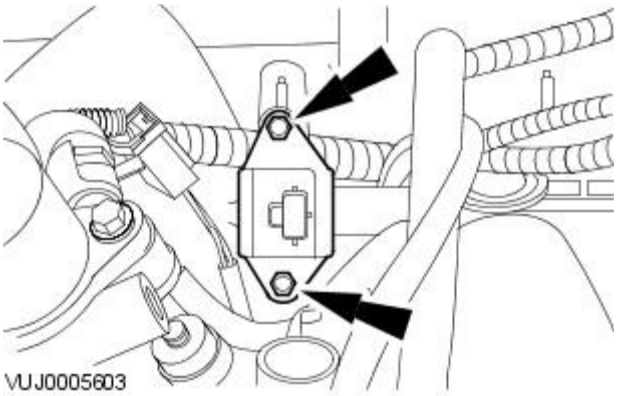


**4.** CAUTION: Do not smoke or carry lighted tobacco or open flame of any type when working on or near any fuel related components. Highly flammable vapors are always present and may ignite. Failure to follow these instructions can result in personal injury.

To install, reverse removal procedure.

- Tighten to 5 Nm.

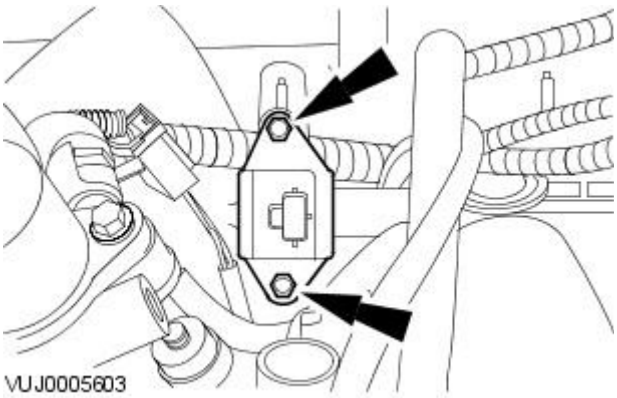


GETtheMANUALS.org

# Fuel Charging and Controls - 2.7L V6 - TdV6 -

**Torque Specifications**

| Description | Nm | lb-ft | lb-in |
|---|---|---|---|
| High-pressure fuel supply line unions | A | – | – |
| High-pressure fuel supply line support bracket retaining nut | 10 | – | 89 |
| Fuel injector retaining bolts | 10 | – | 89 |
| Fuel injector high pressure fuel inlet adaptor union | 42 | 31 | – |
| Fuel injection diverter rail retaining bolts | 23 | 16 | – |
| Fuel injection supply manifold retaining bolts | 23 | 16 | – |
| Fuel injection supply manifold support bracket retaining bolts | 23 | 16 | – |
| Fuel pump retaining bolts | 23 | 16 | – |
| Fuel injection pump belt rear cover retaining bolts | 7 | – | 62 |
| Camshaft rear pulley retaining bolt | A | – | – |
| Fuel injection pump belt tensioner retaining bolt | 25 | 18 | – |
| Fuel injection pump pulley retaining nut | 50 | 37 | – |
| Fuel injection pump high pressure fuel outlet adaptor union | 37 | 27 | – |
| Exhaust gas recirculation (EGR) valve retaining bolts | 10 | – | 89 |
| Intake manifold retaining nuts | 15 | 11 | – |

A = refer to the procedure for the correct torque sequence

GETtheMANUALS.org

# Fuel Charging and Controls - 2.7L V6 - TdV6 - Fuel Charging and Controls

Description and Operation

High Pressure Fuel Injection Components

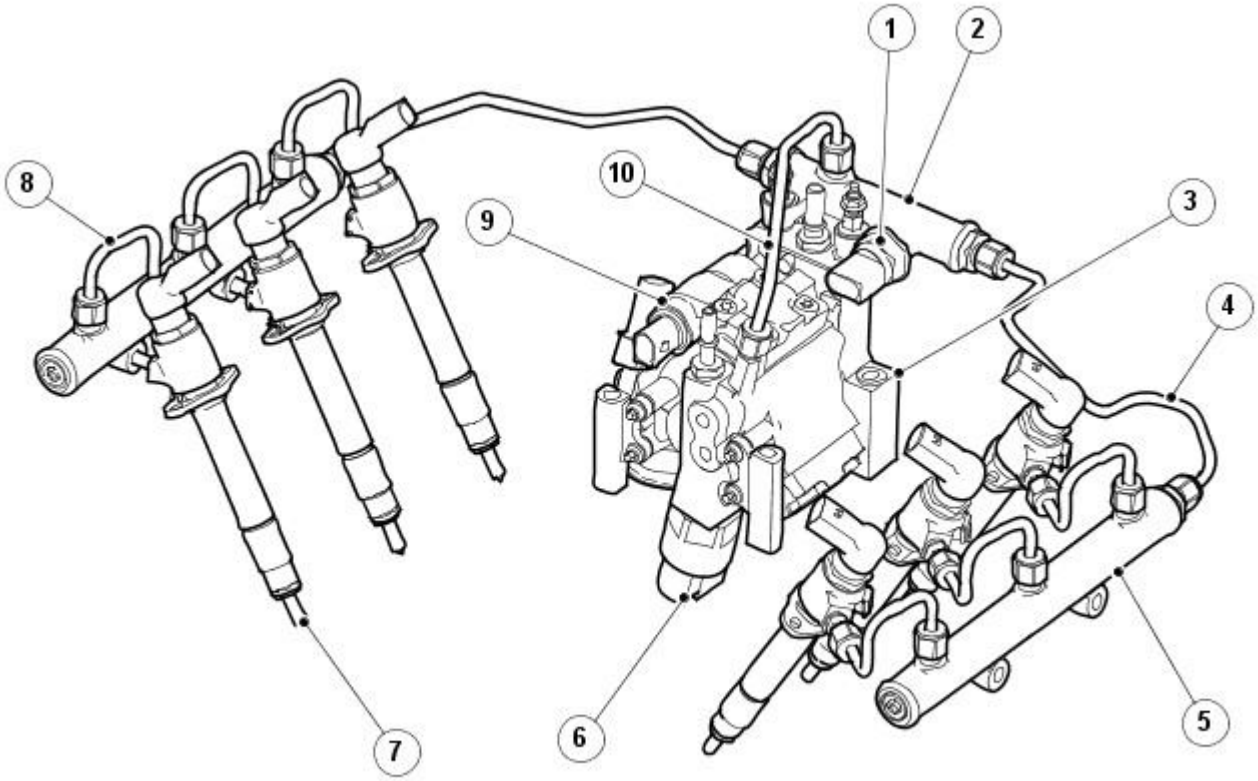


E52629

| Item | Part Number | Description |
|---|---|---|
| 1 | — | Fuel rail pressure pressure sensor |
| 2 | — | Fuel injection diverter rail |
| 3 | — | Fuel injection pump |
| 4 | — | High-pressure fuel supply line (fuel injection diverter rail to fuel injection supply manifold) |
| 5 | — | Fuel injection supply manifold |
| 6 | — | Pressure control valve (PCV) |
| 7 | — | Fuel injector |
| 8 | — | High-pressure fuel supply line (fuel injection supply manifold to fuel injector) |
| 9 | — | Volume control valve (VCV) |
| 10 | - | High-pressure fuel supply line (fuel injection pump to fuel injection diverter rail) |

Fuel Injection Pump

The fuel injection pump is located at the rear of the engine between the cylinder heads and is driven by a toothed drive belt attached to a pulley on the left hand exhaust camshaft. The fuel injection pump is not timed to the engine. The fuel injection pump assembly contains two different types of pump, a transfer pump and a high pressure pump.

Fuel is supplied to the fuel injection pump by an electric fuel pump in the fuel tank via the fuel filter. Fuel then passes through the transfer pump to the high pressure pump. The amount of fuel supplied to the high pressure pump from the transfer pump is determined by the volume control valve (VCV) which is controlled using a pulse width modulated (PWM) signal from the engine control module (ECM). The VCV makes it possible to match the high pressure pump delivery to the requirements of the engine from the low pressure side. This keeps the amount of fuel flowing back to the main supply line to a minimum and reduces the load on the high pressure pump, improving engine efficiency.

The high pressure pump contains three radial pumping elements, capable of generating a fuel pressure of up to 1650 Bar (23,200 lb ft), connected together which leads via a pressure control valve (PCV) to the high pressure outlet of the pump.

The PCV is located between the high pressure and the fuel return line outlet of the pump. The PCV is controlled using a PWM signal from the ECM, and controls the fuel pressure in the fuel diverter rail and fuel injection supply manifolds. Opening of the PCV diverts fuel to the fuel return line and back to the fuel filter. At the same time as the PCV opens to reduce fuel pressure, the ECM closes the VCV to reduce the amount of fuel delivered to the high pressure pump. When the engine is stopped the VCV closes and the PCV opens, this relieves the pressure in the system and returns the fuel to the main fuel supply line.

The PCV and VCV must not be disassembled from fuel injection pump. If either of these components are found to be faulty, the fuel injection pump must be replaced.

• CAUTIONS:

⚠ If any of the high pressure fuel pipe retaining nuts are loosened, the high pressure fuel pipe it is installed to must be renewed. Failure to follow this instruction may allow metal fragments to enter the fuel system and result in damage to the fuel system components or engine.

⚠ The high pressure fuel line olive end deforms and work hardens during installation. If any of the high pressure fuel pipe retaining nuts are loosened, the high pressure fuel pipe it is installed to must be renewed. Failure to follow this instruction may allow the high-pressure fuel line to leak.

GETtheMANUALS.org

Fuel Injection Supply Manifold

The fuel injection supply manifolds are reservoirs for the pressurized fuel that is produced by the fuel pump. The two fuel injection supply manifolds are connected by high pressure fuel pipes to a fuel injection diverter rail mounted on the fuel injection pump. The fuel injection diverter rail also incorporates a pressure sensor so that the ECM can monitor/adjust the pressure of the fuel to be injected into the each cylinder. The fuel injection diverter rail and the pressure sensor are serviced as an assembly and must not under any circumstances be disassembled.

Fuel Injector

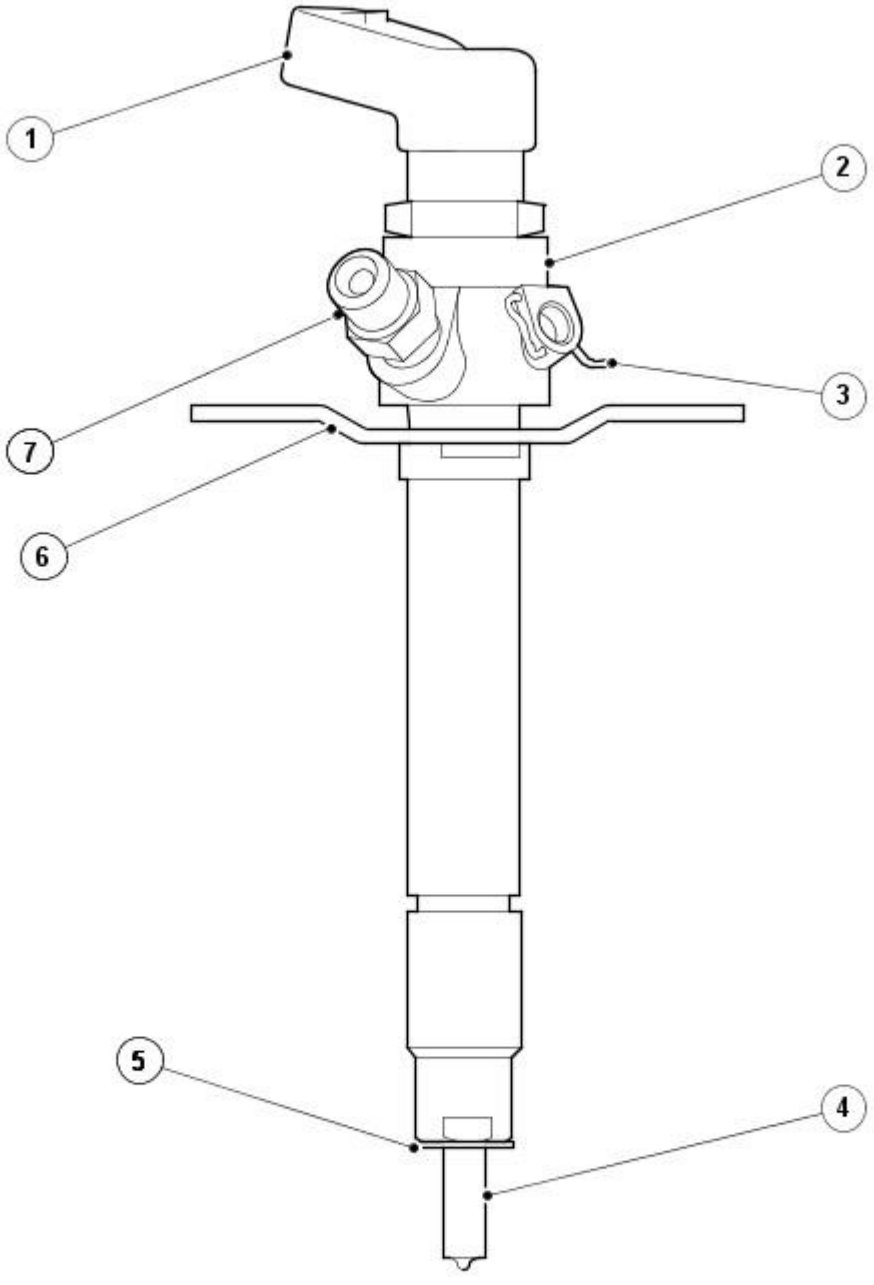


| Item | Part Number | Description |
|---|---|---|
| 1 | — | Electrical connector |
| 2 | — | Fuel injector body |
| 3 | — | Fuel injector leak-off retaining clip |
| 4 | — | Fuel injector nozzle |
| 5 | — | Fuel injector sealing washer |
| 6 | - | Fuel injector retaining clamp |
| 7 | - | High pressure fuel line connection |

• CAUTIONS:

If any of the high pressure fuel pipe retaining nuts are loosened, the high pressure fuel pipe it is installed to must be renewed. Failure to follow this instruction may allow metal fragments to enter the fuel system and result in damage to the fuel system components or engine.

GETtheMANUALS.org

The high pressure fuel line olive end deforms and work hardens during installation. If any of the high pressure fuel pipe retaining nuts are loosened, the high pressure fuel pipe it is installed to must be renewed. Failure to follow this instruction may allow the high-pressure fuel line to leak.

Fuel Injectors

The fuel injectors are operated electrically by the engine control module (ECM) and inject a precise amount of fuel into the combustion chamber at the required time.

The injectors have been designed to:

- allow pilot and main injections with short intervals between each injection.
- be fully electrically controlled.

Fuel Filter

The diesel fuel filter is located on the left-hand side of the engine compartment. Incorporated in to the fuel filter housing is a bimetallic valve which will start to close at 30°C (86°F) and will fully close at 50°C (122°F).

When the bimetallic valve is open, **warm** fuel is directed in to the fuel filter to prevent waxing. When the fuel temperature increases, the bimetallic valve closes, diverting fuel through the under-floor fuel cooler which then lowers the fuel temperature before returning the fuel back to the fuel filter. This allows fuel to be supplied to the fuel injection pump at the optimum inlet temperature of between -30°C to 80°C.

GETtheMANUALS.org

# Fuel Charging and Controls - 2.7L V6 - TdV6 - Fuel Charging and Controls

Diagnosis and Testing

## Principle of operation

Common rail diesel

The 2.7L fuel injection system is a common-rail design, running at the high pressures (up to 1,650 bar or 23,930 lb/in²) typical of such systems.

The fuel is drawn from the fuel tank by an electric lift pump and delivered to the transfer pump side of a high pressure fuel pump (HPFP) driven by the engine. For additional information on the HPFP,
REFER to: Fuel Charging and Controls (303-04C Fuel Charging and Controls - 2.7L V6 - TdV6, Description and Operation).

The fuel volume control valve (FVCV) regulates the amount of fuel supplied to the high pressure side of the HPFP, while the fuel pressure control valve (FPCV) regulates the pressure.

The high pressure fuel is delivered to the fuel rail where it is stored, ready for use by the injectors.

The fuel injectors are Piezo type, and are controlled by the engine control module (ECM) from inputs from the engine management sensors.

The injectors operate in stages, giving a pilot injection before the main injection to reduce detonation noise and help improve the efficiency of the engine.

For additional information,
REFER to: Fuel Charging and Controls (303-04C Fuel Charging and Controls - 2.7L V6 - TdV6, Description and Operation).

## Inspection and Verification

• WARNINGS:

Do **NOT** carry out any work on the fuel system with the engine running. The fuel pressure within the system can be as high as 1650 bar (23,930 lb/in²). Failure to follow this instruction may result in personal injury.

Eye protection must be worn at all times when working on or near any fuel related components. Failure to follow this instruction may result in personal injury.

This procedure involves fuel handling. Be prepared for fuel spillage at all times and always observe fuel handling precautions. Failure to follow this instruction may result in personal injury.

After carrying out repairs, the fuel system must be checked visually for leaks. This should be done after the engine has been run, but with the engine switched **OFF**. Failure to follow this instruction may result in personal injury.

If taken internally, **DO NOT** induce vomiting. Seek immediate medical attention. Failure to follow this instruction may result in personal injury.

If fuel contacts the eyes, flush the eyes with cold water or eyewash solution and seek medical attention. Failure to follow this instruction may result in personal injury.

Wash hands thoroughly after handling, as prolonged contact may cause irritation. Should irritation develop, seek medical attention. Failure to follow this instruction may result in personal injury.

• CAUTIONS:

Before disconnecting any part of the system, it is imperative that all dust, dirt and debris is removed from around components to prevent ingress of foreign matter into the fuel system. Failure to follow this instruction may result in damage to the vehicle.

The fuel pipes between the injectors and the rail must be discarded after each use, and new pipes installed. Failure to follow this instruction may result in damage to the vehicle.

It is essential that absolute cleanliness is observed when working with these components. Always install blanking plugs to any open orifices or lines. Failure to follow this instruction may result in damage to the vehicle.

Make sure that the workshop area in which the vehicle is being worked on is as clean and dust-free as possible. Areas in which work on clutches, brakes or where welding or machining are carried out are not suitable in view of the risk of contamination to the fuel system. Failure to follow this instruction may result in damage to the vehicle.

Make sure that any protective clothing worn is clean and made from lint-free non-flocking material. Failure to follow this instruction may result in damage to the vehicle.

Make sure that any protective gloves worn are new and are of the non-powdered latex type. Failure to follow this instruction may result in damage to the vehicle.

Make sure that clean, non-plated tools are used. Clean tools using a new brush that will not lose it's bristles and fresh cleaning fluid prior to starting work on the vehicle. Failure to follow this instruction may result in damage to the vehicle.

GETtheMANUALS.org

Use a steel-topped work bench and cover it with clean, lint-free, non-flocking material. Failure to follow this instruction may result in damage to the vehicle.

When probing connectors to take measurements in the course of the pinpoint tests, use the adaptor kit, part number 3548-1358-00. Failure to follow this instruction may result in damage to the vehicle.

• NOTE: This section contains references to Parameter Identifiers (PIDs). Where the Jaguar approved diagnostic system is not available, a scantool may be used to access these PIDs, all of which give information, and some of which can be used to both read information and to activate components. The format of the information may vary, depending on the tool used.

• NOTE: When performing voltage or resistance tests, always use a digital multimeter (DMM) accurate to 3 decimal places, and with an up-to-date calibration certificate. When testing resistance, always take the resistance of the DMM leads into account.

• NOTE: Check and rectify basic faults before beginning diagnostic routines involving pinpoint tests.

• NOTE: If diagnostic trouble codes (DTCs) are recorded and the symptom is not present when performing the pinpoint tests, an intermittent concern may be the cause. Always check for loose connections and corroded terminals.

1. **1.** Verify the customer concern.
2. **2.** Confirm which, if any, warning lights and/or messages were displayed on the instrument cluster.
3. **3.** Visually inspect for obvious signs of mechanical or electrical damage.

| Mechanical | Electrical |
|---|---|
| • Fuel level<br>• Contaminated fuel<br>• Fuel leak(s)<br>• Fuel filter<br>• Air cleaner element<br>• Vacuum line(s)/vacuum connections<br>• Hose(s)/hose connections<br>• Fuel supply line(s)<br>• Fuel return line(s)<br>• High-pressure fuel supply line(s)<br>• Fuel injection supply manifold<br>• Fuel pumps<br>• Exhaust gas recirculation (EGR) system | • Glow plug indicator<br>• Lift pump<br>• Sensor(s)<br>• Engine control module (ECM)<br>• Fuel volume control valve (FVCV)<br>• Fuel pressue control valve (FPCV)<br>• Fuel rail pressure sensor<br>• Fuel temperature sensor<br>• Inertia fuel shutoff (IFS) switch<br>• Fuel injectors<br>• EGR system |

## Symptom Chart

| Symptom | Possible source | Action |
|---|---|---|
| Engine cranks, but does not start | • IFS switch<br>• Low/Contaminated fuel<br>• Air ingress<br>• Low pressure circuit fault<br>• Lift pump fault<br>• Blocked fuel filter<br>• FVCV blocked/contaminated<br>• FPCV blocked/contaminated<br>• Pump failure | Check that the inertia switch has not tripped. Check the fuel level/condition, GO to Pinpoint Test C. Check the low pressure circuit for leaks/damage,<br>REFER to: Fuel Tank and Lines (310-01, Diagnosis and Testing).<br>Check the lift pump operation, GO to Pinpoint Test B. Check the fuel filter, GO to Pinpoint Test D. Check the FVCV and FPCV, GO to Pinpoint Test E. GO to Pinpoint Test G. Check the mechanical pump components,<br>REFER to: Fuel Injection Pump (303-04C Fuel Charging and Controls - 2.7L V6 - TdV6, Removal and Installation). |
| Difficult to start | • Low/Contaminated fuel<br>• Lift pump fault<br>• Air ingress<br>• Low pressure circuit fault<br>• Blocked fuel filter<br>• FVCV blocked/contaminated<br>• FPCV blocked/contaminated<br>• Low pressure circuit fault<br>• EGR valve fault | Check the fuel level/condition, GO to Pinpoint Test C. Check the lift pump operation, GO to Pinpoint Test B. Check the low pressure circuit for leaks/damage,<br>REFER to: Fuel Tank and Lines (310-01, Diagnosis and Testing).<br>Check the fuel filter, GO to Pinpoint Test D. Check the FVCV and FPCV, GO to Pinpoint Test E. GO to Pinpoint Test G. For EGR tests,<br>REFER to: Engine Emission Control (303-08B Engine Emission Control - 2.7L V6 - TdV6, Diagnosis and Testing). |
| Rough idle | • Low/Contaminated fuel<br>• Air ingress<br>• Low pressure circuit fault<br>• Blocked fuel filter<br>• FVCV blocked/contaminated<br>• FPCV blocked/contaminated<br>• EGR valve fault | Check the fuel level/condition, GO to Pinpoint Test C. Check the low pressure circuit for leaks/damage,<br>REFER to: Fuel Tank and Lines (310-01, Diagnosis and Testing).<br>Check the fuel filter, GO to Pinpoint Test D. Check the FVCV and FPCV, GO to Pinpoint Test E. GO to Pinpoint Test G. For EGR tests,<br>REFER to: Engine Emission Control (303-08B Engine Emission Control - 2.7L V6 - TdV6, Diagnosis and Testing). |
| Lack of power when accelerating | • Air intake circuit fault<br>• Catalyst blocked<br>• Low fuel pressure<br>• EGR valve fault<br>• Turbocharger fault | Check the air intake circuit,<br>REFER to: Intake Air Distribution and Filtering (303-12C Intake Air Distribution and Filtering - 2.7L V6 - TdV6, Diagnosis and Testing).<br>Check for a blocked catalytic converter,<br>REFER to: Exhaust System - VIN Range: M45255->N13088 (309-00 Exhaust System, Diagnosis and Testing).<br>Check the fuel pressure PID,GO to Pinpoint Test F. For EGR tests,<br>REFER to: Engine Emission Control (303-08B Engine Emission Control - 2.7L V6 - TdV6, Diagnosis and Testing).<br>For turbocharger tests,<br>REFER to: Turbocharger (303-04D Fuel Charging and Controls - Turbocharger - 2.7L V6 - TdV6, Diagnosis and Testing). |
| Engine stops/stalls | • Low/Contaminated fuel<br>• Air ingress<br>• Low pressure circuit fault<br>• FVCV blocked/contaminated<br>• FPCV blocked/contaminated<br>• High pressure leak<br>• EGR valve fault | Check the fuel level/condition, GO to Pinpoint Test C. Check the low pressure circuit for leaks/damage,<br>REFER to: Fuel Tank and Lines (310-01, Diagnosis and Testing).<br>Check the FVCV and FPCV, GO to Pinpoint Test E. GO to Pinpoint Test G. Check for fuel system leaks, GO to Pinpoint Test A. For EGR tests,<br>REFER to: Engine Emission Control (303-08B Engine Emission Control - 2.7L V6 - TdV6, Diagnosis and Testing). |

GET THE MANUALS.org

| Symptom | Possible source | Action |
|---|---|---|
| Engine judders | • Low/Contaminated fuel<br>• Air ingress<br>• Low pressure circuit fault<br>• Fuel metering valve blocked/contaminated<br>• FVCV blocked/contaminated<br>• FPCV blocked/contaminated<br>• High pressure leak<br>• Pump fault | Check the fuel level/condition, GO to Pinpoint Test C. Check the low pressure circuit for leaks/damage,<br>REFER to: Fuel Tank and Lines (310-01, Diagnosis and Testing).<br>Check the FVCV and FPCV, GO to Pinpoint Test E. GO to Pinpoint Test G. Check for fuel system leaks, GO to Pinpoint Test A. Check the mechanical pump components,<br>REFER to: Fuel Injection Pump (303-04C Fuel Charging and Controls - 2.7L V6 - TdV6, Removal and Installation). |
| Excessive fuel consumption | • Low pressure circuit fault<br>• FVCV blocked/contaminated<br>• FPCV blocked/contaminated<br>• Fuel temperature sensor leak<br>• High pressure leak<br>• Injector(s) failure<br>• EGR valve fault | Check the low pressure circuit for leaks/damage,<br>REFER to: Fuel Tank and Lines (310-01, Diagnosis and Testing).<br>Check the FVCV and FPCV, GO to Pinpoint Test E. GO to Pinpoint Test G. Check the fuel temperature sensor, pump, etc for leaks, GO to Pinpoint Test A. Check for injector DTCs. For EGR tests,<br>REFER to: Engine Emission Control (303-08B Engine Emission Control - 2.7L V6 - TdV6, Diagnosis and Testing). |

## DTC index

• NOTE: For a full list of DTCs,
REFER to: Electronic Engine Controls (303-14C Electronic Engine Controls - 2.7L V6 - TdV6, Diagnosis and Testing).

| DTC | Condition | Possible source | Action |
|---|---|---|---|
| P0001 | Fuel volume control valve | • Fuel volume control valve circuit: open circuit<br>• Fuel volume control valve failure | For fuel volume control valve tests, GO to Pinpoint Test E. |
| P0002 | Fuel volume control valve | • Fuel volume control valve circuit: range/performance<br>• Fuel volume control valve failure | For fuel volume control valve tests, GO to Pinpoint Test E. |
| P0003 | Fuel volume control valve | • Fuel volume control valve circuit: short circuit to ground<br>• Fuel volume control valve failure | For fuel volume control valve tests, GO to Pinpoint Test E. |
| P0004 | Fuel volume control valve | • Fuel volume control valve circuit: short circuit to battery<br>• Fuel volume control valve failure | For fuel volume control valve tests, GO to Pinpoint Test E. |
| P0087 | Fuel rail/system pressure | • Pressure too low<br>• Fuel rail pressure sensor circuit failure<br>• Fuel rail pressure sensor failure | For fuel rail pressure sensor tests, GO to Pinpoint Test F. |
| P0088 | Fuel rail/system pressure | • Pressure too high<br>• Fuel rail pressure sensor circuit failure<br>• Fuel rail pressure sensor failure | For fuel rail pressure sensor tests, GO to Pinpoint Test F. |
| P0090 | Fuel pressure control valve | • Fuel pressure control valve circuit: high resistance<br>• Fuel pressure control valve failure | For fuel pressure control valve tests, GO to Pinpoint Test G. |
| P0091 | Fuel pressure control valve | • Fuel pressure control valve circuit: short circuit to ground<br>• Fuel pressure control valve failure | For fuel pressure control valve tests, GO to Pinpoint Test G. |
| P0092 | Fuel pressure control valve | • Fuel pressure control valve circuit: short circuit to battery<br>• Fuel pressure control valve failure | For fuel pressure control valve tests, GO to Pinpoint Test G. |
| P0180 | Fuel temperature sensor | • Fuel temperature sensor circuit: high resistance<br>• Fuel temperature sensor failure | For fuel temperature sensor tests,<br>REFER to: Electronic Engine Controls (303-14C Electronic Engine Controls - 2.7L V6 - TdV6, Diagnosis and Testing). |
| P0181 | Fuel temperature sensor | • Fuel temperature sensor circuit: range/performance<br>• Fuel temperature sensor failure<br>• Fuel temperature sensor failure | For fuel temperature sensor tests,<br>REFER to: Electronic Engine Controls (303-14C Electronic Engine Controls - 2.7L V6 - TdV6, Diagnosis and Testing). |
| P0182 | Fuel temperature sensor | • Fuel temperature sensor circuit: low input<br>• Fuel temperature sensor failure | For fuel temperature sensor tests,<br>REFER to: Electronic Engine Controls (303-14C Electronic Engine Controls - 2.7L V6 - TdV6, Diagnosis and Testing). |
| P0183 | Fuel temperature sensor | • Fuel temperature sensor circuit: high input<br>• Fuel temperature sensor failure | For fuel temperature sensor tests,<br>REFER to: Electronic Engine Controls (303-14C Electronic Engine Controls - 2.7L V6 - TdV6, Diagnosis and Testing). |
| P0184 | Fuel temperature sensor | • Fuel temperature sensor circuit: intermittent<br>• Fuel temperature sensor failure | For fuel temperature sensor tests,<br>REFER to: Electronic Engine Controls (303-14C Electronic Engine Controls - 2.7L V6 - TdV6, Diagnosis and Testing). |
| P0190 | Fuel rail pressure sensor | • Fuel rail pressure sensor circuit: high resistance<br>• Fuel rail pressure sensor failure | For fuel rail pressure sensor tests, GO to Pinpoint Test F. |
| P0191 | Fuel rail pressure sensor | • Fuel rail pressure sensor circuit: range/performance<br>• Fuel rail pressure sensor failure | For fuel rail pressure sensor tests, GO to Pinpoint Test F. |

GETtheMANUALS.org

| DTC | Condition | Possible source | Action |
|---|---|---|---|
| P0192 | Fuel rail pressure sensor | • Fuel rail pressure sensor circuit: low input<br>• Fuel rail pressure sensor failure | For fuel rail pressure sensor tests, GO to Pinpoint Test F. |
| P0193 | Fuel rail pressure sensor | • Fuel rail pressure sensor circuit: high input<br>• Fuel rail pressure sensor failure | For fuel rail pressure sensor tests, GO to Pinpoint Test F. |
| P0194 | Fuel rail pressure sensor | • Fuel rail pressure sensor circuit: intermittent/erratic<br>• Fuel rail pressure sensor failure | For fuel rail pressure sensor tests, GO to Pinpoint Test F. |
| P0201 | Fuel injector, cylinder 1 | • Fuel injector circuit: high resistance<br>• Fuel injector failure | For cylinder 1 fuel injector tests, GO to Pinpoint Test H. |
| P0202 | Fuel injector, cylinder 2 | • Fuel injector circuit: high resistance<br>• Fuel injector failure | For cylinder 2 fuel injector tests, GO to Pinpoint Test I. |
| P0203 | Fuel injector, cylinder 3 | • Fuel injector circuit: high resistance<br>• Fuel injector failure | For cylinder 3 fuel injector tests, GO to Pinpoint Test J. |
| P0204 | Fuel injector, cylinder 4 | • Fuel injector circuit: high resistance<br>• Fuel injector failure | For cylinder 4 fuel injector tests, GO to Pinpoint Test K. |
| P0205 | Fuel injector, cylinder 5 | • Fuel injector circuit: high resistance<br>• Fuel injector failure | For cylinder 5 fuel injector tests, GO to Pinpoint Test L. |
| P0206 | Fuel injector, cylinder 6 | • Fuel injector circuit: high resistance<br>• Fuel injector failure | For cylinder 6 fuel injector tests, GO to Pinpoint Test M. |
| P0263 | Fuel injector circuit, cylinder 1 | • Fuel injector circuit: range/performance<br>• Fuel injector failure | For cylinder 1 fuel injector tests, GO to Pinpoint Test H. |
| P0266 | Fuel injector circuit, cylinder 2 | • Fuel injector circuit: range/performance<br>• Fuel injector failure | For cylinder 2 fuel injector tests, GO to Pinpoint Test I. |
| P0269 | Fuel injector circuit, cylinder 3 | • Fuel injector circuit: range/performance<br>• Fuel injector failure | For cylinder 3 fuel injector tests, GO to Pinpoint Test J. |
| P0272 | Fuel injector circuit, cylinder 4 | • Fuel injector circuit: range/performance<br>• Fuel injector failure | For cylinder 4 fuel injector tests, GO to Pinpoint Test K. |
| P0275 | Fuel injector circuit, cylinder 5 | • Fuel injector circuit: range/performance<br>• Fuel injector failure | For cylinder 5 fuel injector tests, GO to Pinpoint Test L. |
| P0278 | Fuel injector circuit, cylinder 6 | • Fuel injector circuit: range/performance<br>• Fuel injector failure | For cylinder 6 fuel injector tests, GO to Pinpoint Test M. |
| P1298 | Fuel injector driver circuit | • Fuel injector driver circuit: high resistance<br>• Fuel injector driver circuit: short circuit to ground<br>• Fuel injector driver circuit: short circuit to battery<br>• ECM fault | Identify the injector concerned from the DTC stored in the ECM. Refer to the relevant test for the code logged. |
| P1551 | Fuel injector, cylinder 1 | • Fuel injector circuit: range/performance<br>• Fuel injector timing | For cylinder 1 fuel injector tests, GO to Pinpoint Test H. |
| P1552 | Fuel injector, cylinder 2 | • Fuel injector circuit: range/performance<br>• Fuel injector timing | For cylinder 2 fuel injector tests, GO to Pinpoint Test I. |
| P1553 | Fuel injector, cylinder 3 | • Fuel injector circuit: range/performance<br>• Fuel injector timing | For cylinder 3 fuel injector tests, GO to Pinpoint Test J. |
| P1554 | Fuel injector, cylinder 4 | • Fuel injector circuit: range/performance<br>• Fuel injector timing | For cylinder 4 fuel injector tests, GO to Pinpoint Test K. |
| P1555 | Fuel injector, cylinder 5 | • Fuel injector circuit: range/performance<br>• Fuel injector timing | For cylinder 5 fuel injector tests, GO to Pinpoint Test L. |
| P1556 | Fuel injector, cylinder 6 | • Fuel injector circuit: range/performance<br>• Fuel injector timing | For cylinder 6 fuel injector tests, GO to Pinpoint Test M. |
| P1563 | ECM requesting engine stop | • ECM is implementing the run-out-of-fuel strategy | Check and top-up the fuel if necessary. Check for DTCs indicating a fuel level sensor and/or critical fuel level switch fault. |

GETtheMANUALS.org

| DTC | Condition | Possible source | Action |
|---|---|---|---|
| P2269 | Water in fuel condition | • Contaminated fuel<br>• Filler cap missing/insecure<br>• Fuel filter trap not drained | Check the fuel filter water trap. Check the fuel filler cap fitment. Fill the tank with fresh fuel and test for normal operation. |
| P2288 | Fuel injector control pressure | • Fuel injector control pressure: too high<br>• Fuel pressure control valve circuit fault<br>• Fuel pressure control valve fault | For fuel pressure control valve and circuit tests, GO to Pinpoint Test G. |
| P2290 | Fuel injector control pressure | • Fuel injector control pressure: too low<br>• Fuel pressure control valve circuit fault<br>• Fuel pressure control valve fault<br>• Pump/lines fault | For fuel pressure control valve and circuit tests, GO to Pinpoint Test G. |
| P2292 | Fuel injector control pressure | • Fuel injector control pressure: erratic<br>• Fuel pressure control valve circuit fault<br>• Fuel pressure control valve fault | For fuel pressure control valve and circuit tests, GO to Pinpoint Test G. |

## Pinpoint test

| PINPOINT TEST A : CHECK FOR FUEL SYSTEM LEAKS | |
|---|---|
| **TEST CONDITIONS** | **DETAILS/RESULTS/ACTIONS** |
| **A1: CHECK FOR FUEL SYSTEM LEAKS** | |
| • WARNINGS:<br>Do not carry out any work on the fuel system with the engine running, as the fuel pressure within the system can be as high as 1,650 bar (23,930 lb/in²). Failure to follow this instruction may result in personal injury. | |
| Wait at least 30 seconds after the engine stops before commencing any repair to the high pressure fuel injection system. Failure to follow this instruction may result in personal injury. | |
| • NOTE: Remember that the high pressure of the system may mean that leaks will send fuel some distance. Look for a trail to determine the source of the leak. | |
| | 1 Start and run the engine for five minutes. |
| | 2 Turn the ignition switch to the **OFF** position. |
| | 3 Inspect the fuel lines, pump, etc, in the engine bay for cracks/damage. |
| | 4 Raise the vehicle on a suitable lift. |
| | 5 Inspect the fuel lines for cracks/damage. |
| | 6 Check the integrity of the joints in the supply and return lines between the fuel tank and the fuel pump. |
| | 7 Carefully check around the fuel pipes, injectors and pump for evidence of leakage. |
| | 8 If there is evidence of a significant leak, clean the engine and repeat the test. |
| | Is there any evidence of leakage?<br>**Yes**<br>RECTIFY the leak as necessary. Reassemble the removed parts and check the vehicle for normal operation.<br>**No**<br>CHECK for other possible causes for the customer concern. |

## Inspection and Verification

• WARNINGS:

Wait at least 30 seconds after the engine stops before commencing any repair to the high pressure fuel injection system. Failure to follow this instruction may result in personal injury.

This procedure involves fuel handling. Be prepared for fuel spillage at all times and always observe fuel handling precautions. Failure to follow this instruction may result in personal injury.

CAUTION: It is essential that absolute cleanliness is observed when working with these components. Always install blanking plugs to any open orifices or lines. Failure to follow this instruction may result in damage to the vehicle.

**Preliminary Checks**

- Check the condition and fitment of the fuel filler cap
- Check the fuses to the fuel lift pump (fuses 47 and 23 of the rear power distribution box)
- Check the security of the pipe fittings in the low pressure circuit
- Check the pipework for cracks/damage
- Check the fuel filter for cracks/damage

## Pinpoint test

| PINPOINT TEST B : CHECK THE LIFT PUMP FUNCTION | |
|---|---|
| **TEST CONDITIONS** | **DETAILS/RESULTS/ACTIONS** |
| **B1: CHECK THE LIFT PUMP FUNCTION** | |
| | 1 After thoroughly cleaning around the connections, disconnect the inlet pipe from the fuel filter. |
| | 2 Position a suitable container beneath the fuel filter inlet pipe to collect fuel. |
| | 3 Turn the ignition switch to the **ON** position (the pump should run for a short period, depending on temperature, etc). |
| | 4 Check that fuel is pumped from the fuel filter inlet pipe. |

GETtheMANUALS.org

| | |
|---|---|
| | Is fuel pumped from the fuel filter inlet pipe?<br>**Yes**<br>CHECK the drive belt to the high pressure fuel pump,<br>REFER to: Accessory Drive (303-05, Diagnosis and Testing).<br>Check for DTCs.<br>**No**<br>CHECK the lift pump and circuit,<br>REFER to: Fuel Tank and Lines (310-01, Diagnosis and Testing). |

## Inspection and Verification

• WARNINGS:

Wait at least 30 seconds after the engine stops before commencing any repair to the high pressure fuel injection system. Failure to follow this instruction may result in personal injury.

This procedure involves fuel handling. Be prepared for fuel spillage at all times and always observe fuel handling precautions. Failure to follow this instruction may result in personal injury.

CAUTION: It is essential that absolute cleanliness is observed when working with these components. Always install blanking plugs to any open orifices or lines. Failure to follow this instruction may result in damage to the vehicle.

**Preliminary Checks**

- Check the condition and fitment of the fuel filler cap
- Check the security of the pipe fittings in the low pressure circuit
- Check the pipework for cracks/damage
- Check the fuel filter for cracks/damage

## Pinpoint test

| PINPOINT TEST C : CHECK FOR CONTAMINATED FUEL | |
|---|---|
| **TEST CONDITIONS** | **DETAILS/RESULTS/ACTIONS** |
| **C1: CHECK FOR UNUSUAL ODOURS FROM THE FUEL FILLER** | |
| | 1 Gather as much information as possible from the owner/driver regarding refuelling practices. |
| | 2 Remove the fuel filler cap and check for unusual odours. |
| | Are there any unusual odours from the fuel filler neck?<br>**Yes**<br>DRAIN the fuel tank and refill with fresh fuel. Install a new fuel filter.<br>REFER to: Fuel Filter - 2.7L V6 - TdV6 (310-01 Fuel Tank and Lines, Removal and Installation).<br>Test the vehicle for normal operation.<br>**No**<br>GO to C2. |
| **C2: CHECK FOR WATER IN THE FUEL** | |
| | 1 After thoroughly cleaning around the connections, disconnect the inlet pipe from the fuel filter. |
| | 2 Position a suitable clear container beneath the fuel filter inlet pipe to collect fuel. |
| | 3 Turn the ignition switch to the **ON** position (the pump should run for a short period, depending on temperature, etc. It may be necessary to turn the ignition on and off more than once to obtain the desired amount of fuel). |
| | 4 Collect approximately one liter of fuel. |
| | 5 Allow the fuel to stand for at least one minute. |
| | 6 Without disturbing the fuel, check for separation of the fuel into layers (a significant amount of water in the fuel will result in a clear separation between the two fluids, with the water being at the bottom). |
| | Does the fuel show clear separation?<br>**Yes**<br>DRAIN the fuel tank and refill with fresh fuel. Install a new fuel filter.<br>REFER to: Fuel Filter - 2.7L V6 - TdV6 (310-01 Fuel Tank and Lines, Removal and Installation).<br>Test the vehicle for normal operation.<br>**No**<br>CHECK for other contaminants in the fuel. |

## Inspection and Verification

• WARNINGS:

Wait at least 30 seconds after the engine stops before commencing any repair to the high pressure fuel injection system. Failure to follow this instruction may result in personal injury.

This procedure involves fuel handling. Be prepared for fuel spillage at all times and always observe fuel handling precautions. Failure to follow this instruction may result in personal injury.

CAUTION: It is essential that absolute cleanliness is observed when working with these components. Always install blanking plugs to any open orifices or lines. Failure to follow this instruction may result in damage to the vehicle.

Preliminary Checks

Check the pipes and connections to and from the fuel filter for security and condition.

## Pinpoint test

| PINPOINT TEST D : CHECK FOR BLOCKED FUEL FILTER | |
|---|---|
| **TEST CONDITIONS** | **DETAILS/RESULTS/ACTIONS** |

GETtheMANUALS.org

| D1: CHECK THE FLOW OF FUEL THROUGH THE FILTER | |
|---|---|
| | 1 After thoroughly cleaning around the connections, disconnect the fuel filter outlet pipe to the high pressure fuel pump. |
| | WARNING: During this test, fuel will flow backwards through the fuel filter because of the fuel cooler circuit.<br>2 Position a suitable container beneath the fuel filter outlet to collect fuel. |
| | 3 Turn the ignition switch to the **ON** position (the pump should run for a short period, depending on temperature, etc). |
| | Is there an unrestricted flow of fuel through the filter?<br>**Yes**<br>CHECK for DTCs, check for another cause of customer complaint.<br>**No**<br>INSTALL a new fuel filter,<br>REFER to: Fuel Filter - 2.7L V6 - TdV6 (310-01 Fuel Tank and Lines, Removal and Installation).<br>Test the vehicle for normal operation. |

## Inspection and Verification

**Please ensure you adhere to the following instructions while diagnosing and repairing this fault:**

CAUTION: The fuel volume control valve (FVCV) must not be separated from the diesel common rail pump. The FVCV, fuel pressure control valve (FPCV), and high pressure pump should be considered a single unit. Failure to follow this instruction may result in damage to the vehicle.

**This pinpoint test is intended to diagnose the following:**

- Short circuit to GROUND in the FVCV circuit
- Short circuit to POWER in the FVCV circuit
- Open circuit in the FVCV circuit
- FVCV fault
- ECM fault

**Fuel volume control valve (FVCV) connector**

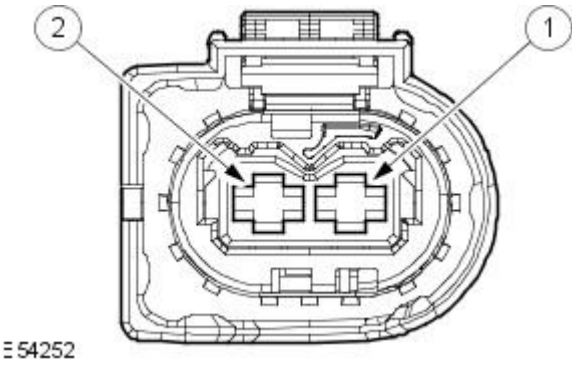


| | |
|---|---|
| Fuel volume control valve - control | 02 |
| Fuel volume control valve - power | 01 |

**Engine control module (ECM) connector**

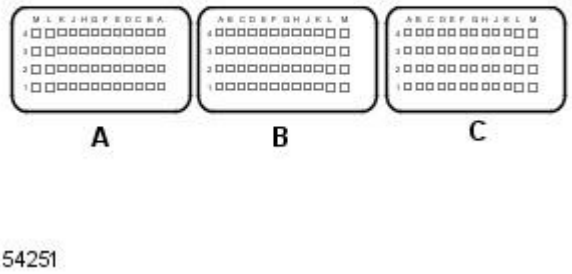


| | |
|---|---|
| Fuel volume control valve - control | B- J4 |

## Pinpoint Tests

| PINPOINT TEST E : FUEL VOLUME CONTROL VALVE AND CIRCUIT | |
|---|---|
| **TEST CONDITIONS** | **DETAILS/RESULTS/ACTIONS** |
| **E1: CHECK THE POWER TO FVCV** | |
| | 1 Key off. |
| | 2 FVCV solenoid connector disconnected. |
| | 3 Key on, engine off. |
| | 4 Measure the voltage between: |
| | Fuel volume control valve - power - Pin 01 — Negative post |
| | Is the Voltage between 9 volts - 15 volts?<br>**Yes**<br>GO to E7.<br>**No** |

GETtheMANUALS.org

| | |
|---|---|
| | No supply to the FVCV circuit. Check and repair the circuit as necessary. |
| **E2: CHECK THE FVCV CONTROL LINE FOR SHORT TO GROUND** | |
| | 1 Measure the resistance between: |
| | Fuel volume control valve - control - Pin 02 / Negative post |
| | Is the resistance greater than 100 Kohms?<br>**Yes**<br>GO to E3.<br>**No**<br>GO to E6. |
| **E3: CHECK THE FVCV CONTROL LINE FOR SHORT TO POWER** | |
| | 1 Measure the resistance between: |
| | Fuel volume control valve - control - Pin 02 / Positive post |
| | Is the resistance greater than 100 Kohms?<br>**Yes**<br>GO to E4.<br>**No**<br>GO to E7. |
| **E4: CHECK THE FVCV CONTROL LINE FOR CONTINUITY** | |
| | 1 Key off. |
| | 2 ECM connector disconnected. |
| | 3 Measure the resistance between: |
| | Fuel volume control valve - control - Pin 02 / Fuel volume control valve - control - Pin B- J4 |
| | Is the resistance less than 10 ohms?<br>**Yes**<br>GO to E5.<br>**No**<br>REPAIR the open circuit. For additional information, refer to the wiring diagrams. |
| **E5: CHECK THE COMPONENT RESISTANCE** | |
| | 1 Measure the resistance between: |
| | Fuel volume control valve - control - Pin 02 / Fuel volume control valve - power - Pin 01 |
| | Is the resistance between 1.5 ohms - 15 ohms?<br>**Yes**<br>An intermittent fault may be present in the wiring harness. Visually check for chaffed wires or other physical damage to the harness. If no fault is found in the circuit, suspect the following component(s):- FVCV connector- FVCV- ECM connector- ECM<br>**No**<br>INSTALL a new FVCV solenoid. |
| **E6: CHECK WHETHER THE SHORT TO GROUND IS IN THE FVCV HARNESS OR ECU** | |
| | 1 Key off. |
| | 2 ECM connector disconnected. |
| | 3 Key on, engine off. |
| | 4 Measure the resistance between: |
| | Fuel volume control valve - control - Pin 02 / Negative post |
| | Is the resistance greater than 100 Kohms?<br>**Yes**<br>Harness is OK.Suspect:- ECM<br>**No**<br>REPAIR the short circuit. For additional information, refer to the wiring diagrams. |
| **E7: CHECK WHETHER THE SHORT TO POWER IS IN THE FVCV HARNESS OR ECU** | |
| | 1 Key off. |
| | 2 ECM connector disconnected. |
| | 3 Key on, engine off. |
| | 4 Measure the resistance between: |
| | Fuel volume control valve - control - Pin 02 / Positive post |
| | Is the resistance greater than 100 Kohms?<br>**Yes**<br>Harness is OK.Suspect:- ECM<br>**No**<br>REPAIR the short circuit. For additional information, refer to the wiring diagrams. |

## Inspection and Verification

**Please ensure you adhere to the following instructions while diagnosing and repairing this fault:**

CAUTION: The FRP sensor must not be separated from the diesel fuel rail. The FRP sensor and central fuel rail should be considered a single unit. Failure to follow this instruction may result in damage to the vehicle.

**This pinpoint test is intended to diagnose the following:**

- Short circuit to GROUND in the FRP circuit
- Short circuit to POWER in the FRP circuit
- Open circuit in the FRP circuit
- FRP fault
- ECM fault

**Fuel rail pressure (FRP) sensor connector**

GETtheMANUALS.org

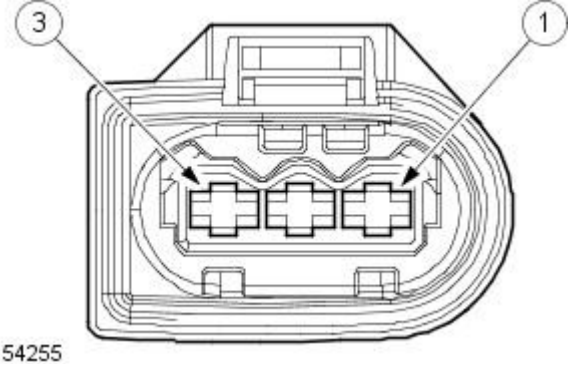


E54255

| | |
|---|---|
| Fuel rail pressure sensor - signal | 01 |
| Fuel rail pressure sensor - power | 03 |
| Fuel rail pressure sensor - return | 02 |

**Engine control module (ECM) connector**

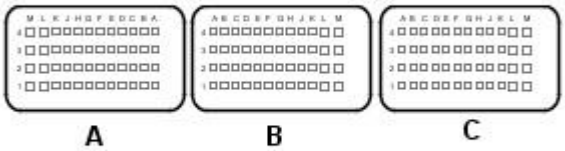


E54251

| | |
|---|---|
| Fuel rail pressure sensor - return | B-E2 |
| Fuel rail pressure sensor - power | B-D2 |
| Fuel rail pressure sensor - signal | B-D1 |

## Pinpoint Test

| PINPOINT TEST F : FUEL RAIL PRESSURE SENSOR AND CIRCUIT | | |
|---|---|---|
| **TEST CONDITIONS** | **DETAILS/RESULTS/ACTIONS** | |
| **F1: CHECK THE FRP SENSOR RETURN LINE** | | |
| | 1 Key off. | |
| | 2 FRP Sensor connector disconnected. | |
| | 3 Key on, engine off. | |
| | 4 Measure the resistance between: | |
| | Fuel rail pressure sensor - return - Pin 02 | Negative post |
| | Is the resistance less than 10 ohms?<br>**Yes**<br>GO to F2.<br>**No**<br>GO to F14. | |
| **F2: CHECK THE FRP VOLTAGE** | | |
| | 1 Measure the voltage between: | |
| | Fuel rail pressure sensor - power - Pin 03 | Negative post |
| | Is the Voltage between 4.8 volts - 5.2 volts?<br>**Yes**<br>GO to F3.<br>**No**<br>GO to F11. | |
| **F3: CHECK THE FRP SIGNAL LINE FOR SHORT CIRCUIT TO GROUND** | | |
| | 1 Measure the resistance between: | |
| | Fuel rail pressure sensor - signal - Pin 01 | Negative post |
| | Is the resistance greater than 100 Kohms?<br>**Yes**<br>GO to F4.<br>**No**<br>GO to F7. | |
| **F4: CHECK THE FRP SIGNAL LINE FOR SHORT CIRCUIT TO POWER** | | |
| | 1 Measure the resistance between: | |
| | Fuel rail pressure sensor - signal - Pin 01 | Positive post |
| | Is the resistance greater than 100 Kohms?<br>**Yes**<br>GO to F5.<br>**No**<br>GO to F9. | |
| **F5: CHECK THE FRP SIGNAL LINE FOR SHORT CIRCUIT TO SENSOR POWER** | | |
| | 1 Measure the resistance between: | |
| | Fuel rail pressure sensor - signal - Pin 01 | Fuel rail pressure sensor - power - Pin 03 |

GETtheMANUALS.org

Is the resistance greater than 100 Kohms?
**Yes**
GO to F6.
**No**
GO to F10.

**F6: CHECK THE FRP SIGNAL LINE FOR OPEN CIRCUIT**

1. Key off.
2. ECM connector disconnected.
3. Measure the resistance between:

| | |
|---|---|
| Fuel rail pressure sensor - signal - Pin 01 | Fuel rail pressure sensor - signal - Pin B-D1 |

Is the resistance less than 10 ohms?
**Yes**
An intermittent fault may be present in the wiring harness. Visually check for chaffed wires or other physical damage to the harness. If no fault is found in the circuit, suspect the following component(s):- FRP connector- ECM connector- FRP- ECM
**No**
REPAIR the open circuit. For additional information, refer to the wiring diagrams.

**F7: CHECK THE FRP CIRCUIT(S) FOR SIGNAL AND RETURN LINES SHORTED TOGETHER**

1. Key off.
2. ECM connector disconnected.
3. Key on, engine off.
4. Measure the resistance between:

| | |
|---|---|
| Fuel rail pressure sensor - signal - Pin 01 | Fuel rail pressure sensor - return - Pin 02 |

Is the resistance greater than 100 Kohms?
**Yes**
GO to F8.
**No**
REPAIR the short circuit. For additional information, refer to the wiring diagrams.

**F8: CHECK WHETHER THE SHORT CIRCUIT TO GROUND IS IN THE FRP HARNESS OR ECU**

1. Measure the resistance between:

| | |
|---|---|
| Fuel rail pressure sensor - signal - Pin 01 | Negative post |

Is the resistance greater than 100 Kohms?
**Yes**
Suspect:- ECM
**No**
REPAIR the short circuit. For additional information, refer to the wiring diagrams.

**F9: CHECK WHETHER THE SHORT CIRCUIT TO POWER IS IN THE FRP HARNESS OR ECU**

1. Key off.
2. ECM connector disconnected.
3. Key on, engine off.
4. Measure the resistance between:

| | |
|---|---|
| Fuel rail pressure sensor - signal - Pin 01 | Positive post |

Is the resistance greater than 100 Kohms?
**Yes**
Suspect:- ECM
**No**
REPAIR the short circuit. For additional information, refer to the wiring diagrams.

**F10: CHECK WHETHER THE SHORT CIRCUIT IS IN THE FRP HARNESS OR ECU**

1. Key off.
2. ECM connector disconnected.
3. Key on, engine off.
4. Measure the resistance between:

| | |
|---|---|
| Fuel rail pressure sensor - signal - Pin 01 | Fuel rail pressure sensor - power - Pin 03 |

Is the resistance greater than 100 Kohms?
**Yes**
Suspect:- ECM
**No**
REPAIR the short circuit. For additional information, refer to the wiring diagrams.

**F11: CHECK THE 5 VOLT SUPPLY LINE FOR SHORT CIRCUIT TO GROUND**

1. Measure the resistance between:

| | |
|---|---|
| Fuel rail pressure sensor - power - Pin 03 | Negative post |

Is the resistance greater than 100 Kohms?
**Yes**
GO to F12.
**No**
GO to F17.

**F12: CHECK THE 5 VOLT SUPPLY LINE FOR SHORT TO POWER**

1. Measure the resistance between:

| | |
|---|---|
| Fuel rail pressure sensor - power - Pin 03 | Positive post |

Is the resistance greater than 100 Kohms?
**Yes**
GO to F13.
**No**
GO to F19.

**F13: CHECK THE FRP 5 VOLT SUPPLY LINE FOR OPEN CIRCUIT**

1. Key off.
2. ECM connector disconnected.
3. Key on, engine off.
4. Measure the resistance between:

| | |
|---|---|
| Fuel rail pressure sensor - power - Pin 03 | Fuel rail pressure sensor - power - Pin B-D2 |

Is the resistance less than 10 ohms?
**Yes**
Suspect :- ECM connector- ECM
**No**

GETtheMANUALS.org

| | |
|---|---|
| | REPAIR the open circuit. For additional information, refer to the wiring diagrams. |
| **F14: CHECK THE FRP SENSOR RETURN LINE FOR SHORT CIRCUIT TO POWER** | |
| | 1 Measure the resistance between: |
| | Fuel rail pressure sensor - return - Pin 02 / Positive post |
| | Is the resistance greater than 100 Kohms?<br>**Yes**<br>GO to F15.<br>**No**<br>GO to F20. |
| **F15: CHECK WHETHER THE 5 VOLT SUPPLY AND SIGNAL RETURN LINES ARE SHORTED TOGETHER** | |
| | 1 Key off. |
| | 2 ECM connector disconnected. |
| | 3 Key on, engine off. |
| | 4 Measure the resistance between: |
| | Fuel rail pressure sensor - power - Pin 03 / Fuel rail pressure sensor - return- Pin 02 |
| | Is the resistance greater than 100 Kohms?<br>**Yes**<br>GO to F16.<br>**No**<br>REPAIR the short circuit. For additional information, refer to the wiring diagrams. |
| **F16: CHECK THE FRP SENSOR RETURN LINE FOR OPEN CIRCUIT** | |
| | 1 Measure the resistance between: |
| | Fuel rail pressure sensor - return - Pin 02 / Fuel rail pressure sensor - return - Pin B-E2 |
| | Is the resistance less than 10 ohms?<br>**Yes**<br>Suspect :- ECM connector- ECM<br>**No**<br>REPAIR the open circuit. For additional information, refer to the wiring diagrams. |
| **F17: CHECK WHETHER THE 5 VOLT SUPPLY AND SIGNAL RETURN LINES ARE SHORTED TOGETHER** | |
| | 1 Key off. |
| | 2 ECM connector disconnected. |
| | 3 Key on, engine off. |
| | 4 Measure the resistance between: |
| | Fuel rail pressure sensor - power - Pin 03 / Fuel rail pressure sensor - return - Pin 02 |
| | Is the resistance greater than 100 Kohms?<br>**Yes**<br>GO to F18.<br>**No**<br>REPAIR the short circuit. For additional information, refer to the wiring diagrams. |
| **F18: CHECK WHETHER THE SHORT CIRCUIT TO GROUND IS IN THE FRP HARNESS OR ECU** | |
| | 1 Measure the resistance between: |
| | Fuel rail pressure sensor - power - Pin 03 / Negative post |
| | Is the resistance greater than 100 Kohms?<br>**Yes**<br>Suspect:- ECM<br>**No**<br>REPAIR the short circuit. For additional information, refer to the wiring diagrams. |
| **F19: CHECK WHETHER THE SHORT CIRCUIT TO POWER IS IN THE FRP HARNESS OR ECU** | |
| | 1 Key off. |
| | 2 ECM connector disconnected. |
| | 3 Key on, engine off. |
| | 4 Measure the resistance between: |
| | Fuel rail pressure sensor - power - Pin 03 / Positive post |
| | Is the resistance greater than 100 Kohms?<br>**Yes**<br>Suspect:- ECM<br>**No**<br>REPAIR the short circuit. For additional information, refer to the wiring diagrams. |
| **F20: CHECK WHETHER THE SHORT CIRCUIT TO POWER IS IN THE FRP HARNESS OR ECU** | |
| | 1 Key off. |
| | 2 ECM connector disconnected. |
| | 3 Key on, engine off. |
| | 4 Measure the resistance between: |
| | Fuel rail pressure sensor - return - Pin 02 / Positive post |
| | Is the resistance greater than 100 Kohms?<br>**Yes**<br>Suspect:- ECM<br>**No**<br>REPAIR the short circuit. For additional information, refer to the wiring diagrams. |

## Inspection and Verification

**Please ensure you adhere to the following instructions while diagnosing and repairing this fault:**

CAUTION: The fuel pressure control valve (FPCV) must not be separated from the diesel high pressure pump. The FVCV, FPCV, and high pressure pump should be considered a single unit. Failure to follow this instruction may result in damage to the vehicle.

**This pinpoint test is intended to diagnose the following:**

- Short circuit to GROUND in the FPCV circuit
- Short circuit to POWER in the FPCV circuit
- Open circuit in the FPCV circuit
- FPCV fault
- ECM fault

GETtheMANUALS.org

**Fuel pressure control valve (FPCV) solenoid connector**

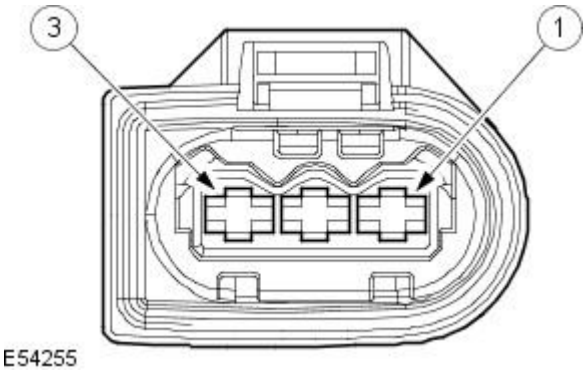


| | |
|---|---|
| Fuel pressure control valve - control | 02 |
| Fuel pressure control valve - power | 01 |

**Engine control module (ECM) connector**

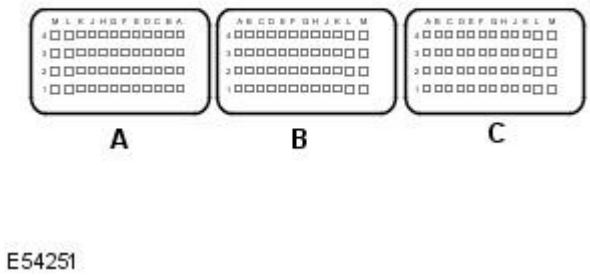


| | |
|---|---|
| Fuel pressure control valve - control | B-K3 |

## Pinpoint test

| PINPOINT TEST G : FUEL PRESSURE CONTROL VALVE (FPCV) AND CIRCUIT | | |
|---|---|---|
| TEST CONDITIONS | DETAILS/RESULTS/ACTIONS | |
| **G1: CHECK THE POWER TO FPCV** | | |
| | 1 Key off. | |
| | 2 FPCV solenoid connector disconnected. | |
| | 3 Key on, engine off. | |
| | 4 Measure the voltage between: | |
| | Fuel pressure control valve - power - Pin 01 | Negative post |
| | Is the Voltage between 9 volts - 15 volts?<br>**Yes**<br>GO to G2.<br>**No**<br>No supply to the FPCV circuit. Check and repair the circuit as necessary. | |
| **G2: CHECK THE FPCV CONTROL LINE FOR SHORT CIRCUIT TO GROUND** | | |
| | 1 Measure the resistance between: | |
| | Fuel pressure control valve - control - Pin 02 | Negative post |
| | Is the resistance greater than 100 Kohms?<br>**Yes**<br>GO to G3.<br>**No**<br>GO to G6. | |
| **G3: CHECK THE FPCV CONTROL LINE FOR SHORT CIRCUIT TO POWER** | | |
| | 1 Measure the resistance between: | |
| | Fuel pressure control valve - control - Pin 02 | Positive post |
| | Is the resistance greater than 100 Kohms?<br>**Yes**<br>GO to G4.<br>**No**<br>GO to G7. | |
| **G4: CHECK THE FPCV CONTROL LINE FOR CONTINUITY** | | |
| | 1 Key off. | |
| | 2 ECM connector disconnected. | |
| | 3 Measure the resistance between: | |
| | Fuel pressure control valve - control - Pin 02 | Fuel pressure control valve - control - Pin B-K3 |
| | Is the resistance less than 10 ohms?<br>**Yes**<br>GO to G5.<br>**No**<br>REPAIR the open circuit. For additional information, refer to the wiring diagrams. | |
| **G5: CHECK THE COMPONENT RESISTANCE** | | |
| | 1 Measure the resistance between: | |
| | Fuel pressure control valve - power - Pin 01 | Fuel pressure control valve - control - Pin 02 |

GETtheMANUALS.org

| | |
|---|---|
| | Is the resistance between 0Ohm - 5.5 ohms?<br>**Yes**<br>An intermittent fault may be present in the wiring harness. Visually check for chaffed wires or other physical damage to the harness. If no fault is found in the circuit, suspect the following component(s):- FPCV connector- FPCV- ECM connector- ECM<br>**No**<br>INSTALL a new FPCV solenoid. |
| **G6: CHECK WHETHER THE SHORT CIRCUIT TO GROUND IS IN THE FPCV HARNESS OR ECU** | |
| | 1 Key off. |
| | 2 ECM connector disconnected. |
| | 3 Key on, engine off. |
| | 4 Measure the resistance between: |
| | Fuel pressure control valve - control - Pin 02 / Negative post |
| | Is the resistance greater than 100 Kohms?<br>**Yes**<br>Harness is OK.Suspect:- ECM<br>**No**<br>REPAIR the short circuit. For additional information, refer to the wiring diagrams. |
| **G7: CHECK WHETHER THE SHORT CIRCUIT TO POWER IS IN THE FPCV HARNESS OR ECU** | |
| | 1 Key off. |
| | 2 ECM connector disconnected. |
| | 3 Key on, engine off. |
| | 4 Measure the resistance between: |
| | Fuel pressure control valve - control - Pin 02 / Positive post |
| | Is the resistance greater than 100 Kohms?<br>**Yes**<br>Harness is OK.Suspect:- ECM<br>**No**<br>REPAIR the short circuit. For additional information, refer to the wiring diagrams. |

## Inspection and Verification

**Please ensure you adhere to the following instructions while diagnosing and repairing this fault:**

• CAUTIONS:

When the engine is running, the electrical connectors from the injectors to the engine control unit must not be disconnected. Failure to follow this instruction may result in damage to the vehicle.

The injectors themselves must not be dismantled or loosened in any way. Failure to follow this instruction may result in damage to the vehicle.

The hexagonal nut between the injector fuel intake pipe and electrical connector should not be loosened, or used to apply rotational pressure when removing the injector from the engine. Failure to follow this instruction may result in damage to the vehicle.

Note

**This pinpoint test is intended to diagnose the following:**

- Short circuit to GROUND in the INJ0 circuit
- Short circuit to POWER in the INJ0 circuit
- Open circuit in the INJ0 circuit
- INJ0 fault
- ECM fault

**To aid in the identification of the injector related to this strategy, a diagram has been provided below:**

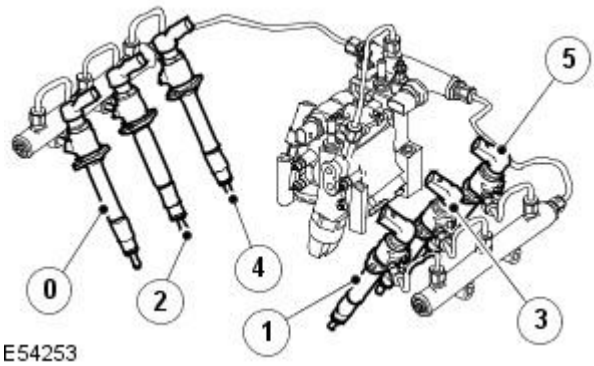


**INJ0 solenoid connector**

GETtheMANUALS.org

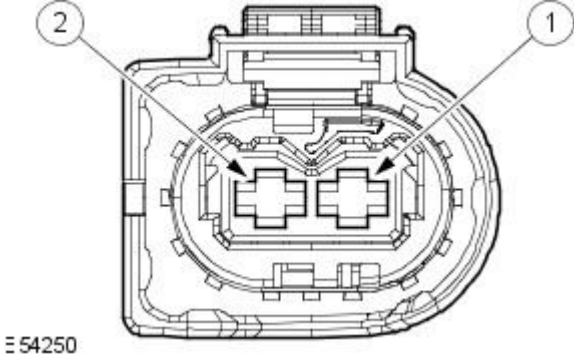


| | |
|---|---|
| Fuel injector, cylinder 1 - ground | 01 |
| Fuel injector, cylinder 1 - control | 02 |

**Engine control module (ECM) connector**

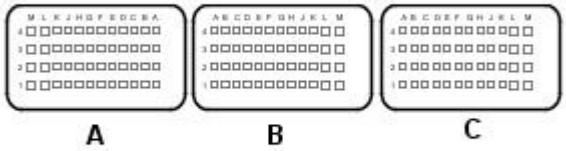


| | |
|---|---|
| Fuel injector, cylinder 1 - ground | C-L3 |
| Fuel injector, cylinder 1 - control | C-M3 |

## Pinpoint test

| PINPOINT TEST H : FUEL INJECTOR AND CIRCUIT, CYLINDER 1 | | |
|---|---|---|
| **TEST CONDITIONS** | **DETAILS/RESULTS/ACTIONS** | |
| **H1: CHECK COMPONENT RESISTANCE** | | |
| | 1 Key off. | |
| | 2 INJ0 Solenoid connector disconnected. | |
| | 3 Measure the resistance between: | |
| | Fuel injector, cylinder 1 - control - Pin 02 | Fuel injector, cylinder 1 - ground - Pin 01 |
| | Is the resistance between 180 Kohms - 220 Kohms?<br>**Yes**<br>GO to H2.<br>**No**<br>INSTALL a new INJ0 solenoid.<br>REFER to: Fuel Injector (303-04C Fuel Charging and Controls - 2.7L V6 - TdV6, Removal and Installation). | |
| **H2: CHECK THE COMBINED INJ0 SOLENOID AND HARNESS RESISTANCE** | | |
| | 1 Key off. | |
| | 2 INJ0 Solenoid connector connected. | |
| | 3 ECM connector disconnected. | |
| | 4 Measure the resistance between: | |
| | Fuel injector, cylinder 1 - control - Pin C-M3 | Fuel injector, cylinder 1 - ground - Pin C-L3 |
| | Is the resistance between 180 Kohms - 220 Kohms?<br>**Yes**<br>GO to H5.<br>**No**<br>GO to H3. | |
| **H3: CHECK FOR A SHORT CIRCUIT BETWEEN THE SIGNAL AND RETURN LINES** | | |
| | 1 Measure the resistance between: | |
| | Fuel injector, cylinder 1 - control - Pin C-M3 | Fuel injector, cylinder 1 - ground - Pin C-L3 |
| | Is the resistance greater than 100 Kohms?<br>**Yes**<br>GO to H4.<br>**No**<br>GO to H9. | |
| **H4: CHECK INJ0 CIRCUIT FOR AN OPEN CIRCUIT IN THE HARNESS** | | |
| | 1 INJ0 Solenoid connector disconnected. | |
| | 2 Measure the resistance between: | |
| | Fuel injector, cylinder 1 - control - Pin 02 | Fuel injector, cylinder 1 - control - Pin C-M3 |
| | Fuel injector, cylinder 1 - ground - Pin 01 | Fuel injector, cylinder 1 - ground - Pin C-L3 |
| | Are the resistances less than 10 ohms?<br>**Yes**<br>An intermittent fault may be present in the wiring harness. Visually check for chaffed wires or other physical damage to the harness. If no fault is found in the circuit, suspect the following component(s):- INJ0 connector- ECM connector- INJ0<br>**No**<br>REPAIR the open circuit. For additional information, refer to the wiring diagrams. | |
| **H5: CHECK THE INJ0 CIRCUIT FOR SHORT CIRCUIT TO GROUND** | | |

GETtheMANUALS.org

| | |
|---|---|
| | 1 Key on, engine off. |
| | 2 Measure the resistance between: |
| | Fuel injector, cylinder 1 - control - Pin C-M3 — Negative post |
| | Fuel injector, cylinder 1 - ground - Pin C-L3 — Negative post |
| | Are the resistances greater than 100 Kohms?<br>**Yes**<br>GO to H7.<br>**No**<br>GO to H6. |
| **H6: CHECK WHETHER THE SHORT CIRCUIT TO GROUND IS IN THE HARNESS OR INJ0** | |
| | 1 Key off. |
| | 2 INJ0 Solenoid connector disconnected. |
| | 3 Key on, engine off. |
| | 4 Measure the resistance between: |
| | Fuel injector, cylinder 1 - control - Pin C-M3 — Negative post |
| | Fuel injector, cylinder 1 - ground - Pin C-L3 — Negative post |
| | Are the resistances greater than 100 Kohms?<br>**Yes**<br>Harness is OK.Suspect:- INJ0<br>**No**<br>REPAIR the short circuit. For additional information, refer to the wiring diagrams. |
| **H7: CHECK THE INJ0 CIRCUIT FOR SHORT CIRCUIT TO POWER** | |
| | 1 Measure the resistance between: |
| | Fuel injector, cylinder 1 - control - Pin C-M3 — Positive post |
| | Fuel injector, cylinder 1 - ground - Pin C-L3 — Positive post |
| | Are the resistances greater than 100 Kohms?<br>**Yes**<br>An intermittent fault may be present in the wiring harness. Visually check for chaffed wires or other physical damage to the harness. If no fault is found in the circuit, suspect the following component(s):- INJ0 connector- INJ0- ECM connector- ECM<br>**No**<br>GO to H8. |
| **H8: CHECK WHETHER THE SHORT CIRCUIT TO POWER IS IN THE HARNESS OR INJ0** | |
| | 1 Key off. |
| | 2 INJ0 Solenoid connector disconnected. |
| | 3 Key on, engine off. |
| | 4 Measure the resistance between: |
| | Fuel injector, cylinder 1 - control - Pin C-M3 — Positive post |
| | Fuel injector, cylinder 1 - ground - Pin C-L3 — Positive post |
| | Are the resistances greater than 100 Kohms?<br>**Yes**<br>Harness is OK.Suspect:- INJ0<br>**No**<br>REPAIR the short circuit. For additional information, refer to the wiring diagrams. |
| **H9: CHECK WHETHER THE SHORT CIRCUIT IS IN THE HARNESS OR THE INJ0 COMPONENT** | |
| | 1 Key off. |
| | 2 INJ0 Solenoid connector disconnected. |
| | 3 Key on, engine off. |
| | 4 Measure the resistance between: |
| | Fuel injector, cylinder 1 - control - Pin C-M3 — Fuel injector, cylinder 1 - ground - Pin C-L3 |
| | Is the resistance greater than 100 Kohms?<br>**Yes**<br>Harness is OK.Suspect- INJ0<br>**No**<br>REPAIR the short circuit. For additional information, refer to the wiring diagrams. |

## Inspection and Verification

**Please ensure you adhere to the following instructions while diagnosing and repairing this fault:**

• CAUTIONS:

When the engine is running, the electrical connectors from the injectors to the engine control unit must not be disconnected. Failure to follow this instruction may result in damage to the vehicle.

The injectors themselves must not be dismantled or loosened in any way. Failure to follow this instruction may result in damage to the vehicle.

The hexagonal nut between the injector fuel intake pipe and electrical connector should not be loosened, or used to apply rotational pressure when removing the injector from the engine. Failure to follow this instruction may result in damage to the vehicle.

**This pinpoint test is intended to diagnose the following:**

- Short circuit to GROUND in the INJ2 circuit
- Short circuit to POWER in the INJ2 circuit
- Open circuit in the INJ2 circuit
- INJ2 fault
- ECM fault

**To aid in the identification of the injector related to this strategy, a diagram has been provided below:**

GETtheMANUALS.org

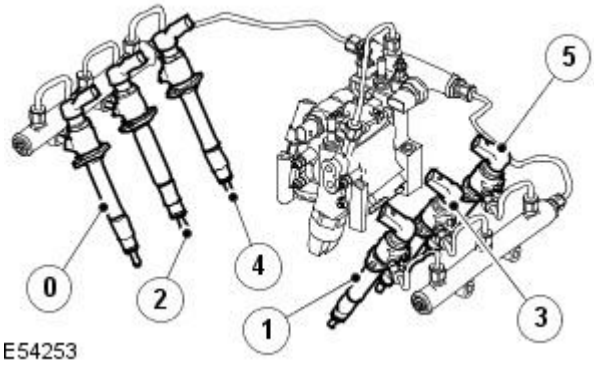


**Injector 2 (INJ2) solenoid connector**

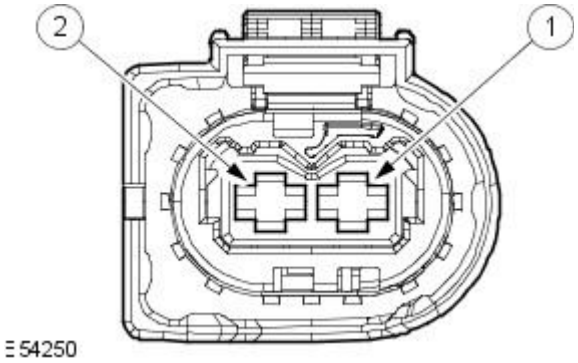


| | |
|---|---|
| Fuel injector, cylinder 2 - ground | 01 |
| Fuel injector, cylinder 2 - control | 02 |

**Engine control module (ECM) connector**

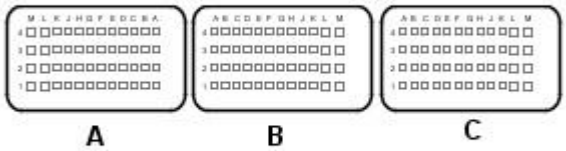


| | |
|---|---|
| Fuel injector, cylinder 2 - ground | C-L2 |
| Fuel injector, cylinder 2 - control | C-M2 |

## Pinpoint test

| PINPOINT TEST I : FUEL INJECTOR AND CIRCUIT, CYLINDER 2 | | |
|---|---|---|
| **TEST CONDITIONS** | **DETAILS/RESULTS/ACTIONS** | |
| **I1: CHECK THE COMPONENT RESISTANCE** | | |
| | 1 Key off. | |
| | 2 INJ2 solenoid connector disconnected. | |
| | 3 Measure the resistance between: | |
| | Fuel injector, cylinder 2 - control - Pin 02 | Fuel injector, cylinder 2 - ground - Pin 01 |
| | Is the resistance between 180 Kohms - 220 Kohms?<br>**Yes**<br>GO to I2.<br>**No**<br>INSTALL a new INJ2 solenoid.<br>REFER to: Fuel Injector (303-04C Fuel Charging and Controls - 2.7L V6 - TdV6, Removal and Installation). | |
| **I2: CHECK THE COMBINED INJ2 SOLENOID AND HARNESS RESISTANCE** | | |
| | 1 Key off. | |
| | 2 INJ2 solenoid connector connected. | |
| | 3 ECM connector disconnected. | |
| | 4 Measure the resistance between: | |
| | Fuel injector, cylinder 2 - control - Pin C-M2 | Fuel injector, cylinder 2 - ground - Pin C-L2 |
| | Is the resistance between 180 Kohms - 220 Kohms?<br>**Yes**<br>GO to I5.<br>**No**<br>GO to I3. | |
| **I3: CHECK FOR A SHORT CIRCUIT BETWEEN THE SIGNAL AND RETURN LINES** | | |
| | 1 Measure the resistance between: | |
| | Fuel injector, cylinder 2 - control - Pin C-M2 | Fuel injector, cylinder 2 - ground - Pin C-L2 |

GETtheMANUALS.org

| | |
|---|---|
| | Is the resistance greater than 100 Kohms?<br>**Yes**<br>GO to I4.<br>**No**<br>GO to I9. |

**I4: CHECK INJ2 CIRCUIT FOR AN OPEN CIRCUIT IN THE HARNESS**

| | |
|---|---|
| | 1 INJ2 solenoid connector disconnected. |
| | 2 Measure the resistance between: |

| | |
|---|---|
| Fuel injector, cylinder 2 - control - Pin 02 | Fuel injector, cylinder 2 - control - Pin C-M2 |
| Fuel injector, cylinder 2 - ground - Pin 01 | Fuel injector, cylinder 2 - ground - Pin C-L2 |

| | |
|---|---|
| | Are the resistances less than 10 ohms?<br>**Yes**<br>An intermittent fault may be present in the wiring harness. Visually check for chaffed wires or other physical damage to the harness. If no fault is found in the circuit, suspect the following component(s):- INJ2 connector- ECM connector- INJ2<br>**No**<br>REPAIR the open circuit. For additional information, refer to the wiring diagrams. |

**I5: CHECK THE INJ2 CIRCUIT FOR SHORT CIRCUIT TO GROUND**

| | |
|---|---|
| | 1 Key on, engine off. |
| | 2 Measure the resistance between: |

| | |
|---|---|
| Fuel injector, cylinder 2 - control - Pin C-M2 | Negative post |
| Fuel injector, cylinder 2 - ground - Pin C-L2 | Negative post |

| | |
|---|---|
| | Are the resistances greater than 100 Kohms?<br>**Yes**<br>GO to I7.<br>**No**<br>GO to I6. |

**I6: CHECK WHETHER THE SHORT CIRCUIT TO GROUND IS IN THE HARNESS OR INJ2**

| | |
|---|---|
| | 1 Key off. |
| | 2 INJ2 solenoid connector disconnected. |
| | 3 Key on, engine off. |
| | 4 Measure the resistance between: |

| | |
|---|---|
| Fuel injector, cylinder 2 - control - Pin C-M2 | Negative post |
| Fuel injector, cylinder 2 - ground - Pin C-L2 | Negative post |

| | |
|---|---|
| | Are the resistances greater than 100 Kohms?<br>**Yes**<br>Harness is OK.Suspect:- INJ2<br>**No**<br>REPAIR the short circuit. For additional information, refer to the wiring diagrams. |

**I7: CHECK INJ2 CIRCUIT FOR SHORT CIRCUIT TO POWER**

| | |
|---|---|
| | 1 Measure the resistance between: |

| | |
|---|---|
| Fuel injector, cylinder 2 - control - Pin C-M2 | Positive post |
| Fuel injector, cylinder 2 - ground - Pin C-L2 | Positive post |

| | |
|---|---|
| | Are the resistances greater than 100 Kohms?<br>**Yes**<br>An intermittent fault may be present in the wiring harness. Visually check for chaffed wires or other physical damage to the harness. If no fault is found in the circuit, suspect the following component(s):- INJ2 connector- INJ2- ECM connector- ECM<br>**No**<br>GO to I8. |

**I8: CHECK WHETHER THE SHORT CIRCUIT TO POWER IS IN THE HARNESS OR INJ2**

| | |
|---|---|
| | 1 Key off. |
| | 2 INJ2 solenoid connector disconnected. |
| | 3 Key on, engine off. |
| | 4 Measure the resistance between: |

| | |
|---|---|
| Fuel injector, cylinder 2 - control - Pin C-M2 | Positive post |
| Fuel injector, cylinder 2 - ground - Pin C-L2 | Positive post |

| | |
|---|---|
| | Are the resistances greater than 100 Kohms?<br>**Yes**<br>Harness is OK.Suspect:- INJ2<br>**No**<br>REPAIR the short circuit. For additional information, refer to the wiring diagrams. |

**I9: CHECK WHETHER THE SHORT CIRCUIT IS IN THE HARNESS OR THE INJ2 COMPONENT**

| | |
|---|---|
| | 1 Key off. |
| | 2 INJ2 solenoid connector disconnected. |
| | 3 Key on, engine off. |
| | 4 Measure the resistance between: |

| | |
|---|---|
| Fuel injector, cylinder 2 - control - Pin C-M2 | Fuel injector, cylinder 2 - ground - Pin C-L2 |

| | |
|---|---|
| | Is the resistance greater than 100 Kohms?<br>**Yes**<br>Harness is OK.Suspect- INJ2<br>**No**<br>REPAIR the short circuit. For additional information, refer to the wiring diagrams. |

## Inspection and Verification

**Please ensure you adhere to the following instructions while diagnosing and repairing this fault:**

• CAUTIONS:

When the engine is running, the electrical connectors from the injectors to the engine control unit must not be disconnected. Failure to follow this instruction may result in damage to the vehicle.

GETtheMANUALS.org

The injectors themselves must not be dismantled or loosened in any way. Failure to follow this instruction may result in damage to

the vehicle.

The hexagonal nut between the injector fuel intake pipe and electrical connector should not be loosened, or used to apply rotational pressure when removing the injector from the engine. Failure to follow this instruction may result in damage to the vehicle.

**This pinpoint test is intended to diagnose the following:**

- Short circuit to GROUND in the INJ4 circuit
- Short circuit to POWER in the INJ4 circuit
- Open circuit in the INJ4 circuit
- INJ4 fault
- ECM fault

**To aid in the identification of the injector related to this strategy, a diagram has been provided below:**

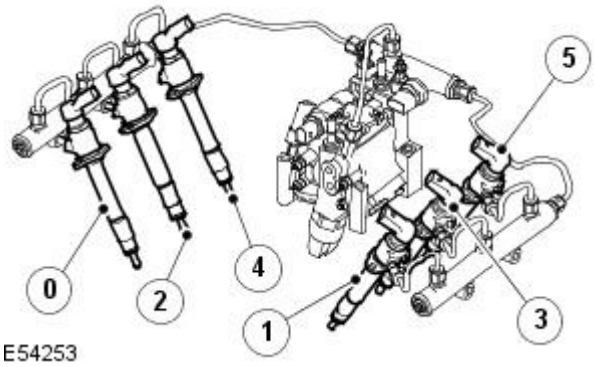


**Injector 4 (INJ4) solenoid connector**

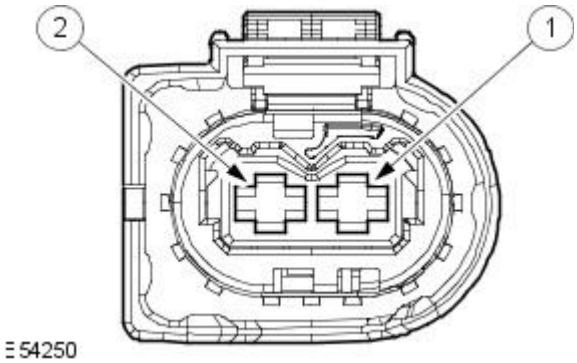


| | |
|---|---|
| Fuel injector, cylinder 3 - ground | 01 |
| Fuel injector, cylinder 3 - control | 02 |

**Engine control module (ECM) connector**

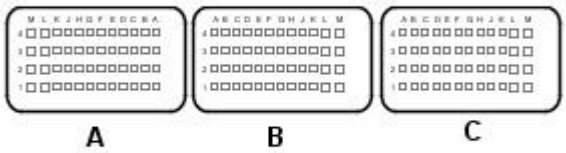


| | |
|---|---|
| Fuel injector, cylinder 3 - ground | C-L4 |
| Fuel injector, cylinder 3 - control | C-M4 |

## Pinpoint test

| PINPOINT TEST J : FUEL INJECTOR AND CIRCUIT, CYLINDER 3 | | |
|---|---|---|
| **TEST CONDITIONS** | **DETAILS/RESULTS/ACTIONS** | |
| **J1: CHECK THE COMPONENT RESISTANCE** | | |
| | 1 Key off. | |
| | 2 INJ4 solenoid connector disconnected. | |
| | 3 Measure the resistance between: | |
| | Fuel injector, cylinder 3 - control - Pin 02 | Fuel injector, cylinder 3 - ground - Pin 01 |
| | Is the resistance between 180 Kohms - 220 Kohms?<br>**Yes**<br>GO to J2.<br>**No**<br>INSTALL a new INJ4 solenoid.<br>REFER to: Fuel Injector (303-04C Fuel Charging and Controls - 2.7L V6 - TdV6, Removal and Installation). | |

GETtheMANUALS.org

**J2: CHECK THE COMBINED INJ4 SOLENOID AND HARNESS RESISTANCE**

1. Key off.
2. INJ4 solenoid connector connected.
3. ECM connector disconnected.
4. Measure the resistance between:

| | |
|---|---|
| Fuel injector, cylinder 3 - control - Pin C-M4 | Fuel injector, cylinder 3 - ground - Pin C-L4 |

Is the resistance between 180 Kohms - 220 Kohms?

**Yes**

GO to J5.

**No**

GO to J3.

**J3: CHECK FOR A SHORT CIRCUIT BETWEEN THE SIGNAL AND RETURN LINES**

1. Measure the resistance between:

| | |
|---|---|
| Fuel injector, cylinder 3 - control - Pin C-M4 | Fuel injector, cylinder 3 - ground - Pin C-L4 |

Is the resistance greater than 100 Kohms?

**Yes**

GO to J4.

**No**

GO to J9.

**J4: CHECK INJ4 CIRCUIT FOR AN OPEN CIRCUIT IN THE HARNESS**

1. INJ4 solenoid connector disconnected.
2. Measure the resistance between:

| | |
|---|---|
| Fuel injector, cylinder 3 - control - Pin 02 | Fuel injector, cylinder 3 - control - Pin C-M4 |
| Fuel injector, cylinder 3 - ground - Pin 01 | Fuel injector, cylinder 3 - ground - Pin C-L4 |

Are the resistances less than 10 ohms?

**Yes**

An intermittent fault may be present in the wiring harness. Visually check for chaffed wires or other physical damage to the harness. If no fault is found in the circuit, suspect the following component(s):- INJ4 connector- ECM connector- INJ4

**No**

REPAIR the open circuit. For additional information, refer to the wiring diagrams.

**J5: CHECK THE INJ4 CIRCUIT FOR SHORT CIRCUIT TO GROUND**

1. Key on, engine off.
2. Measure the resistance between:

| | |
|---|---|
| Fuel injector, cylinder 3 - control - Pin C-M4 | Negative post |
| Fuel injector, cylinder 3 - ground - Pin C-L4 | Negative post |

Are the resistances greater than 100 Kohms?

**Yes**

GO to J7.

**No**

GO to J6.

**J6: CHECK WHETHER THE SHORT CIRCUIT TO GROUND IS IN THE HARNESS OR INJ4**

1. Key off.
2. INJ4 solenoid connector disconnected.
3. Key on, engine off.
4. Measure the resistance between:

| | |
|---|---|
| Fuel injector, cylinder 3 - control - Pin C-M4 | Negative post |
| Fuel injector, cylinder 3 - ground - Pin C-L4 | Negative post |

Are the resistances greater than 100 Kohms?

**Yes**

Harness is OK.Suspect:- INJ4

**No**

REPAIR the short circuit. For additional information, refer to the wiring diagrams.

**J7: CHECK INJ4 CIRCUIT FOR SHORT CIRCUIT TO POWER**

1. Measure the resistance between:

| | |
|---|---|
| Fuel injector, cylinder 3 - control - Pin C-M4 | Positive post |
| Fuel injector, cylinder 3 - ground - Pin C-L4 | Positive post |

Are the resistances greater than 100 Kohms?

**Yes**

An intermittent fault may be present in the wiring harness. Visually check for chaffed wires or other physical damage to the harness. If no fault is found in the circuit, suspect the following component(s):- INJ4 connector- INJ4- ECM connector- ECM

**No**

GO to J8.

**J8: CHECK WHETHER THE SHORT CIRCUIT TO POWER IS IN THE HARNESS OR INJ4**

1. Key off.
2. INJ4 solenoid connector disconnected.
3. Key on, engine off.
4. Measure the resistance between:

| | |
|---|---|
| Fuel injector, cylinder 3 - control - Pin C-M4 | Positive post |
| Fuel injector, cylinder 3 - ground - Pin C-L4 | Positive post |

Are the resistances greater than 100 Kohms?

**Yes**

Harness is OK.Suspect:- INJ4

**No**

REPAIR the short circuit. For additional infromation, refer to the wiring diagrams.

**J9: CHECK WHETHER THE SHORT CIRCUIT IS IN THE HARNESS OR THE INJ4 COMPONENT**

1. Key off.
2. INJ4 solenoid connector disconnected.
3. Key on, engine off.
4. Measure the resistance between:

| | |
|---|---|
| Fuel injector, cylinder 3 - control - Pin C-M4 | Fuel injector, cylinder 3 - ground - Pin C-L4 |

GETtheMANUALS.org

| | |
|---|---|
| | Is the resistance greater than 100 Kohms?<br>**Yes**<br>Harness is OK.Suspect- INJ4<br>**No**<br>REPAIR the short circuit. For additional information, refer to the wiring diagrams. |

## Inspection and Verification

**Please ensure you adhere to the following instructions while diagnosing and repairing this fault:**

• CAUTIONS:

When the engine is running, the electrical connectors from the injectors to the engine control unit must not be disconnected. Failure to follow this instruction may result in damage to the vehicle.

The injectors themselves must not be dismantled or loosened in any way. Failure to follow this instruction may result in damage to the vehicle.

The hexagonal nut between the injector fuel intake pipe and electrical connector should not be loosened, or used to apply rotational pressure when removing the injector from the engine. Failure to follow this instruction may result in damage to the vehicle.

**This pinpoint test is intended to diagnose the following:**

- Short circuit to GROUND in the INJ1 circuit
- Short circuit to POWER in the INJ1 circuit
- Open circuit in the INJ1 circuit
- INJ fault
- ECM fault

**To aid in the identification of the injector related to this strategy, a diagram has been provided below:**

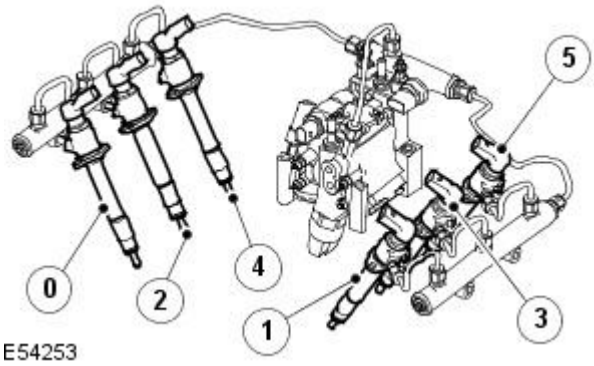


**Injector 1 (INJ1) solenoid connector**

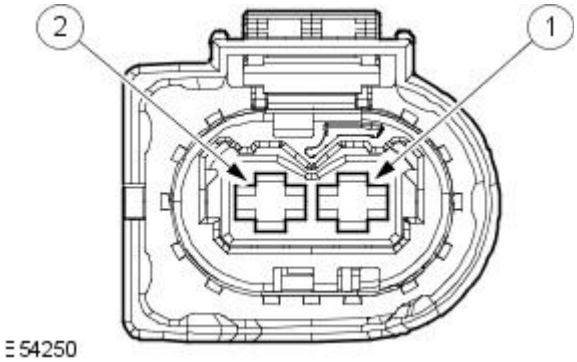


| | |
|---|---|
| Fuel injector, cylinder 4 - ground | 01 |
| Fuel injector, cylinder 4 - control | 02 |

**Engine control module (ECM) connector**

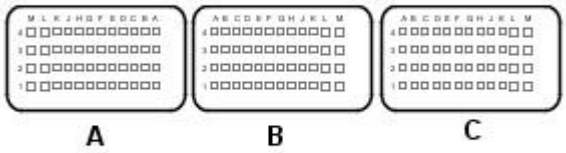


| | |
|---|---|
| Fuel injector, cylinder 4 - ground | B-L2 |
| Fuel injector, cylinder 4 - control | B-L1 |

GETtheMANUALS.org

## Pinpoint test

| PINPOINT TEST K : FUEL INJECTOR AND CIRCUIT, CYLINDER 4 | |
|---|---|
| **TEST CONDITIONS** | **DETAILS/RESULTS/ACTIONS** |
| **K1: CHECK THE COMPONENT RESISTANCE** | |
| | 1 Key off. |
| | 2 INJ1 solenoid connector disconnected. |
| | 3 Measure the resistance between: |
| | Fuel injector, cylinder 4 - control - Pin 02 / Fuel injector, cylinder 4 - ground - Pin 01 |
| | Is the resistance between 180 Kohms - 220 Kohms?<br>**Yes**<br>GO to K2.<br>**No**<br>INSTALL a new INJ1 solenoid.<br>REFER to: Fuel Injector (303-04C Fuel Charging and Controls - 2.7L V6 - TdV6, Removal and Installation). |
| **K2: CHECK THE COMBINED INJ1 SOLENOID AND HARNESS RESISTANCE** | |
| | 1 Key off. |
| | 2 INJ1 solenoid connector connected. |
| | 3 ECM connector disconnected. |
| | 4 Measure the resistance between: |
| | Fuel injector, cylinder 4 - control - Pin B-L1 / Fuel injector, cylinder 4 - ground - Pin B-L2 |
| | Is the resistance between 180 Kohms - 220 Kohms?<br>**Yes**<br>GO to K5.<br>**No**<br>GO to K3. |
| **K3: CHECK FOR A SHORT CIRCUIT BETWEEN THE SIGNAL AND RETURN LINES** | |
| | 1 Measure the resistance between: |
| | Fuel injector, cylinder 4 - control - Pin B-L1 / Fuel injector, cylinder 4 - ground - Pin B-L2 |
| | Is the resistance greater than 100 Kohms?<br>**Yes**<br>GO to K4.<br>**No**<br>GO to K9. |
| **K4: CHECK INJ1 CIRCUIT FOR AN OPEN CIRCUIT IN THE HARNESS** | |
| | 1 INJ1 solenoid connector disconnected. |
| | 2 Measure the resistance between: |
| | Fuel injector, cylinder 4 - control - Pin 02 / Fuel injector, cylinder 4 - control - Pin B-L1 |
| | Fuel injector, cylinder 4 - ground - Pin 01 / Fuel injector, cylinder 4 - ground - Pin B-L2 |
| | Are the resistances less than 10 ohm?<br>**Yes**<br>An intermittent fault may be present in the wiring harness. Visually check for chaffed wires or other physical damage to the harness. If no fault is found in the circuit, suspect the following component(s):- INJ1 connector- ECM connector- INJ1<br>**No**<br>REPAIR the open circuit. For additional information, refer to the wiring diagrams. |
| **K5: CHECK THE INJ1 CIRCUIT FOR A SHORT CIRCUIT TO GROUND** | |
| | 1 Key on, engine off. |
| | 2 Measure the resistance between: |
| | Fuel injector, cylinder 4 - control - Pin B-L1 / Negative post |
| | Fuel injector, cylinder 4 - ground - Pin B-L2 / Negative post |
| | Are the resistances greater than 100 Kohms?<br>**Yes**<br>GO to K7.<br>**No**<br>GO to K6. |
| **K6: CHECK WHETHER THE SHORT CIRCUIT TO GROUND IS IN THE HARNESS OR INJ1** | |
| | 1 Key off. |
| | 2 INJ1 solenoid connector disconnected. |
| | 3 Key on, engine off. |
| | 4 Measure the resistance between: |
| | Fuel injector, cylinder 4 - control - Pin B-L1 / Negative post |
| | Fuel injector, cylinder 4 - ground - Pin B-L2 / Negative post |
| | Are the resistances greater than 100 Kohms?<br>**Yes**<br>Harness is OK.Suspect:- INJ1<br>**No**<br>REPAIR the short circuit. For additional information, refer to the wiring diagrams. |
| **K7: CHECK INJ1 CIRCUIT FOR SHORT CIRCUIT TO POWER** | |
| | 1 Measure the resistance between: |
| | Fuel injector, cylinder 4 - control - Pin B-L1 / Positive post |
| | Fuel injector, cylinder 4 - ground - Pin B-L2 / Positive post |
| | Are the resistances greater than 100 Kohms?<br>**Yes**<br>An intermittent fault may be present in the wiring harness. Visually check for chaffed wires or other physical damage to the harness. If no fault is found in the circuit, suspect the following component(s):- INJ1 connector- INJ1- ECM connector- ECM<br>**No**<br>GO to K8. |
| **K8: CHECK WHETHER THE SHORT CIRCUIT TO POWER IS IN THE HARNESS OR INJ1** | |
| | 1 Key off. |
| | 2 INJ1 solenoid connector disconnected. |
| | 3 Key on, engine off. |

GETtheMANUALS.org

| | |
|---|---|
| | 4 Measure the resistance between: |
| | Fuel injector, cylinder 4 - control - Pin B-L1 — Positive post |
| | Fuel injector, cylinder 4 - ground - Pin B-L2 — Positive post |
| | Are the resistances greater than 100 Kohms?<br>**Yes**<br>Harness is OK.Suspect:- INJ1<br>**No**<br>REPAIR the short circuit. For additional information, refer to the wiring diagrams. |
| **K9: CHECK WHETHER THE SHORT CIRCUIT IS IN THE HARNESS OR THE INJ1 COMPONENT** | |
| | 1 Key off. |
| | 2 INJ1 solenoid connector disconnected. |
| | 3 Key on, engine off. |
| | 4 Measure the resistance between: |
| | Fuel injector, cylinder 4 - control - Pin B-L1 — Fuel injector, cylinder 4 - ground - Pin B-L2 |
| | Is the resistance greater than 100 Kohms?<br>**Yes**<br>Harness is OK.Suspect- INJ1<br>**No**<br>REPAIR the short circuit. For additional information, refer to the witing diagrams. |

## Inspection and Verification

**Please ensure you adhere to the following instructions while diagnosing and repairing this fault:**

• CAUTIONS:

When the engine is running, the electrical connectors from the injectors to the engine control unit must not be disconnected. Failure to follow this instruction may result in damage to the vehicle.

The injectors themselves must not be dismantled or loosened in any way. Failure to follow this instruction may result in damage to the vehicle.

The hexagonal nut between the injector fuel intake pipe and electrical connector should not be loosened, or used to apply rotational pressure when removing the injector from the engine. Failure to follow this instruction may result in damage to the vehicle.

**This pinpoint test is intended to diagnose the following:**

- Short circuit to GROUND in the INJ3 circuit
- Short circuit to POWER in the INJ3 circuit
- Open circuit in the INJ3 circuit
- INJ3 fault
- ECM fault

**To aid in the identification of the injector related to this strategy, a diagram has been provided below:**

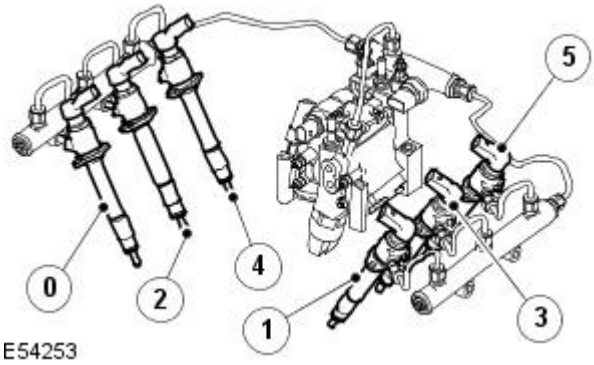


**Injector 3 (INJ3) solenoid connector**

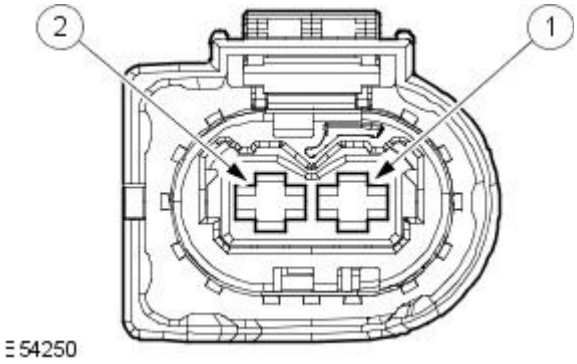


| | |
|---|---|
| Fuel injector, cylinder 5 - ground | 01 |
| Fuel injector, cylinder 5 - control | 02 |

**Engine control module (ECM) connector**

GETtheMANUALS.org

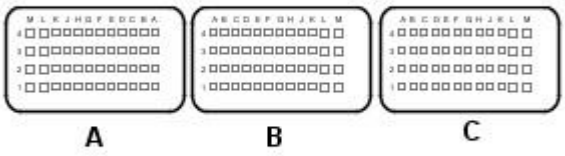


E54251

| | |
|---|---|
| Fuel injector, cylinder 5 - ground | B-L3 |
| Fuel injector, cylinder 5 - control | B-M1 |

## Pinpoint test

| PINPOINT TEST L : FUEL INJECTOR AND CIRCUIT, CYLINDER 5 | | |
|---|---|---|
| TEST CONDITIONS | DETAILS/RESULTS/ACTIONS | |
| **L1: CHECK THE COMPONENT RESISTANCE** | | |
| | 1 Key off. | |
| | 2 INJ3 solenoid connector disconnected. | |
| | 3 Measure the resistance between: | |
| | Fuel injector, cylinder 5 - control - Pin 02 | Fuel injector, cylinder 5 - ground - Pin 01 |
| | Is the resistance between 180 Kohms - 220 Kohms?<br>**Yes**<br>GO to L2.<br>**No**<br>INSTALL a new INJ3 solenoid.<br>REFER to: Fuel Injector (303-04C Fuel Charging and Controls - 2.7L V6 - TdV6, Removal and Installation). | |
| **L2: CHECK THE COMBINED INJ3 SOLENOID AND HARNESS RESISTANCE** | | |
| | 1 Key off. | |
| | 2 INJ3 solenoid connector connected. | |
| | 3 ECM connector disconnected. | |
| | 4 Measure the resistance between: | |
| | Fuel injector, cylinder 5 - control - Pin B-M1 | Fuel injector, cylinder 5 - ground - Pin B-L3 |
| | Is the resistance between 180 Kohms - 220 Kohms?<br>**Yes**<br>GO to L5.<br>**No**<br>GO to L3. | |
| **L3: CHECK FOR A SHORT CIRCUIT BETWEEN THE SIGNAL AND RETURN LINES** | | |
| | 1 Measure the resistance between: | |
| | Fuel injector, cylinder 5 - control - Pin B-M1 | Fuel injector, cylinder 5 - ground - Pin B-L3 |
| | Is the resistance greater than 100 Kohms?<br>**Yes**<br>GO to L4.<br>**No**<br>GO to L9. | |
| **L4: CHECK THE INJ3 CIRCUIT FOR AN OPEN CIRCUIT IN THE HARNESS** | | |
| | 1 INJ3 solenoid connector disconnected. | |
| | 2 Measure the resistance between: | |
| | Fuel injector, cylinder 5 - control - Pin 02 | Fuel injector, cylinder 5 - control - Pin B-M1 |
| | Fuel injector, cylinder 5 - ground - Pin 01 | Fuel injector, cylinder 5 - ground - Pin B-L3 |
| | Are the resistances less than 10 ohms?<br>**Yes**<br>An intermittent fault may be present in the wiring harness. Visually check for chaffed wires or other physical damage to the harness. If no fault is found in the circuit, suspect the following component(s):- INJ3 connector- ECM connector- INJ3<br>**No**<br>REPAIR the open circuit. For additional information, refer to the wiring diagrams. | |
| **L5: CHECK THE INJ3 CIRCUIT FOR A SHORT CIRCUIT TO GROUND** | | |
| | 1 Key on, engine off. | |
| | 2 Measure the resistance between: | |
| | Fuel injector, cylinder 5 - control - Pin B-M1 | Negative post |
| | Fuel injector, cylinder 5 - ground - Pin B-L3 | Negative post |
| | Are the resistances greater than 100 Kohms?<br>**Yes**<br>GO to L7.<br>**No**<br>GO to L6. | |
| **L6: CHECK WHETHER THE SHORT CIRCUIT TO GROUND IS IN THE HARNESS OR INJ3** | | |
| | 1 Key off. | |
| | 2 INJ3 solenoid connector disconnected. | |
| | 3 Key on, engine off. | |
| | 4 Measure the resistance between: | |
| | Fuel injector, cylinder 5 - control - Pin B-M1 | Negative post |
| | Fuel injector, cylinder 5 - ground - Pin B-L3 | Negative post |

CETheMANUALS.org

| | |
|---|---|
| | Are the resistances greater than 100 Kohms?<br>**Yes**<br>Harness is OK.Suspect:- INJ3<br>**No**<br>REPAIR the short circuit. For additional information, refer to the wiring diagrams. |
| **L7: CHECK THE INJ3 CIRCUIT FOR SHORT CIRCUIT TO POWER** | |
| | 1 Measure the resistance between: |
| | Fuel injector, cylinder 5 - control - Pin B-M1 — Positive post |
| | Fuel injector, cylinder 5 - ground - Pin B-L3 — Positive post |
| | Are the resistances greater than 100 Kohms?<br>**Yes**<br>An intermittent fault may be present in the wiring harness. Visually check for chaffed wires or other physical damage to the harness. If no fault is found in the circuit, suspect the following component(s):- INJ3 connector- INJ3- ECM connector- ECM<br>**No**<br>GO to L8. |
| **L8: CHECK WHETHER THE SHORT CIRCUIT TO POWER IS IN THE HARNESS OR INJ3** | |
| | 1 Key off. |
| | 2 INJ3 solenoid connector disconnected. |
| | 3 Key on, engine off. |
| | 4 Measure the resistance between: |
| | Fuel injector, cylinder 5 - control - Pin B-M1 — Positive post |
| | Fuel injector, cylinder 5 - ground - Pin B-L3 — Positive post |
| | Are the resistances greater than 100 Kohms?<br>**Yes**<br>Harness is OK.Suspect:- INJ3<br>**No**<br>REPAIR the short circuit. For additional information, refer to the wiring diagrams. |
| **L9: CHECK WHETHER THE SHORT CIRCUIT IS IN THE HARNESS OR THE INJ3 COMPONENT** | |
| | 1 Key off. |
| | 2 INJ3 solenoid connector disconnected. |
| | 3 Key on, engine off. |
| | 4 Measure the resistance between: |
| | Fuel injector, cylinder 5 - control - Pin B-M1 — Fuel injector, cylinder 5 - ground - Pin B-L3 |
| | Is the resistance greater than 100 Kohms?<br>**Yes**<br>Harness is OK.Suspect- INJ3<br>**No**<br>REPAIR the short circuit. For additional information, refer to the wiring diagrams. |

## Inspection and Verification

**Please ensure you adhere to the following instructions while diagnosing and repairing this fault:**

• CAUTIONS:

When the engine is running, the electrical connectors from the injectors to the engine control unit must not be disconnected. Failure to follow this instruction may result in damage to the vehicle.

The injectors themselves must not be dismantled or loosened in any way. Failure to follow this instruction may result in damage to the vehicle.

The hexagonal nut between the injector fuel intake pipe and electrical connector should not be loosened, or used to apply rotational pressure when removing the injector from the engine. Failure to follow this instruction may result in damage to the vehicle.

**This pinpoint test is intended to diagnose the following:**

- Short circuit to GROUND in the INJ5 circuit
- Short circuit to POWER in the INJ5 circuit
- Open circuit in the INJ5 circuit
- INJ5 fault
- ECM fault

**To aid in the identification of the injector related to this strategy, a diagram has been provided below:**

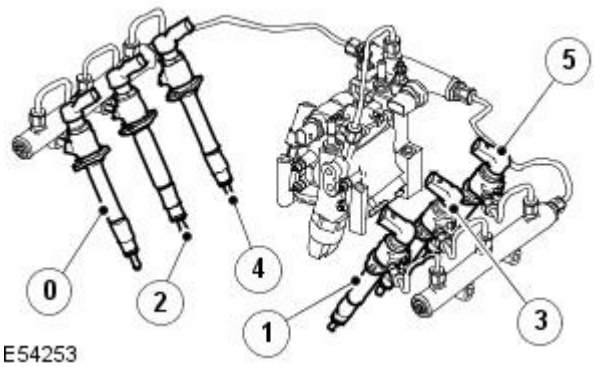


**Injector 5 (INJ5) solenoid connector**

GETtheMANUALS.org

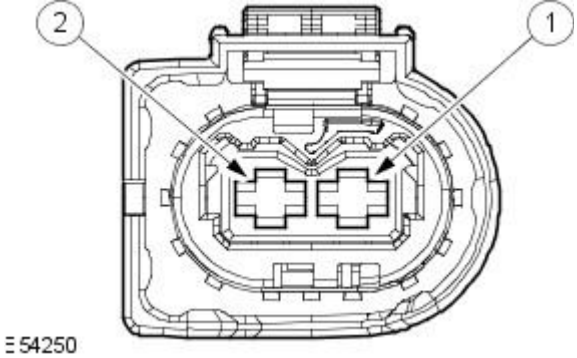


| | |
|---|---|
| Fuel injector, cylinder 6 - ground | 01 |
| Fuel injector, cylinder 6 - control | 02 |

**Engine control module (ECM) connector**

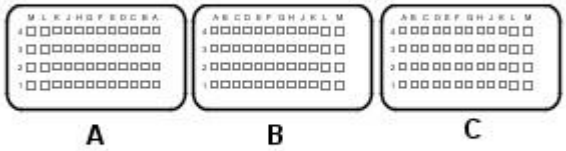


| | |
|---|---|
| Fuel injector, cylinder 6 - ground | B-M3 |
| Fuel injector, cylinder 6 - control | B-M2 |

## Pinpoint test

| PINPOINT TEST M : FUEL INJECTOR AND CIRCUIT, CYLINDER 6 | | |
|---|---|---|
| **TEST CONDITIONS** | **DETAILS/RESULTS/ACTIONS** | |
| **M1: CHECK THE COMPONENT RESISTANCE** | | |
| | 1 Key off. | |
| | 2 INJ5 solenoid connector disconnected. | |
| | 3 Measure the resistance between: | |
| | Fuel injector, cylinder 6 - control - Pin 02 | Fuel injector, cylinder 6 - ground - Pin 01 |
| | Is the resistance between 180 Kohms - 220 Kohms?<br>**Yes**<br>GO to M2.<br>**No**<br>INSTALL a new INJ5 solenoid.<br>REFER to: Fuel Injector (303-04C Fuel Charging and Controls - 2.7L V6 - TdV6, Removal and Installation). | |
| **M2: CHECK THE COMBINED INJ5 SOLENOID AND HARNESS RESISTANCE** | | |
| | 1 Key off. | |
| | 2 INJ5 solenoid connector connected. | |
| | 3 ECM connector disconnected. | |
| | 4 Measure the resistance between: | |
| | Fuel injector, cylinder 6 - control - Pin B-M2 | Fuel injector, cylinder 6 - ground - Pin B-M3 |
| | Is the resistance between 180 Kohms - 220 Kohms?<br>**Yes**<br>GO to M5.<br>**No**<br>GO to M3. | |
| **M3: CHECK FOR A SHORT CIRCUIT BETWEEN THE SIGNAL AND RETURN LINES** | | |
| | 1 Measure the resistance between: | |
| | Fuel injector, cylinder 6 - control - Pin B-M2 | Fuel injector, cylinder 6 - ground - Pin B-M3 |
| | Is the resistance greater than 100 Kohms?<br>**Yes**<br>GO to M4.<br>**No**<br>GO to M9. | |
| **M4: CHECK INJ5 CIRCUIT FOR AN OPEN CIRCUIT IN THE HARNESS** | | |
| | 1 INJ5 solenoid connector disconnected. | |
| | 2 Measure the resistance between: | |
| | Fuel injector, cylinder 6 - control - Pin 02 | Fuel injector, cylinder 6 - control - Pin B-M2 |
| | Fuel injector, cylinder 6 - ground - Pin 01 | Fuel injector, cylinder 6 - ground - Pin B-M3 |
| | Are the resistances less than 10 ohms?<br>**Yes**<br>An intermittent fault may be present in the wiring harness. Visually check for chaffed wires or other physical damage to the harness. If no fault is found in the circuit, suspect the following component(s):- INJ5 connector- ECM connector- INJ5<br>**No**<br>REPAIR the open circuit. For additional information, refer to the wiring diagrams. | |
| **M5: CHECK THE INJ5 CIRCUIT FOR A SHORT CIRCUIT TO GROUND** | | |

GETtheMANUALS.org

| | |
|---|---|
| | 1 Key on, engine off. |
| | 2 Measure the resistance between: |
| | Fuel injector, cylinder 6 - control - Pin B-M2 — Negative post |
| | Fuel injector, cylinder 6 - ground - Pin B-M3 — Negative post |
| | Are the resistances greater than 100 Kohms?<br>**Yes**<br>GO to M7.<br>**No**<br>GO to M6. |
| **M6: CHECK WHETHER THE SHORT CIRCUIT TO GROUND IS IN THE HARNESS OR INJ5** | |
| | 1 Key off. |
| | 2 INJ5 solenoid connector disconnected. |
| | 3 Key on, engine off. |
| | 4 Measure the resistance between: |
| | Fuel injector, cylinder 6 - control - Pin B-M2 — Negative post |
| | Fuel injector, cylinder 6 - ground - Pin B-M3 — Negative post |
| | Are the resistances greater than 100 Kohms?<br>**Yes**<br>Harness is OK.Suspect:- INJ5<br>**No**<br>REPAIR the short circuit. For additional information, refer to the wiring diagrams. |
| **M7: CHECK THE INJ5 CIRCUIT FOR A SHORT CIRCUIT TO POWER** | |
| | 1 Measure the resistance between: |
| | Fuel injector, cylinder 6 - control - Pin B-M2 — Positive post |
| | Fuel injector, cylinder 6 - ground - Pin B-M3 — Positive post |
| | Are the resistances greater than 100 Kohms?<br>**Yes**<br>An intermittent fault may be present in the wiring harness. Visually check for chaffed wires or other physical damage to the harness. If no fault is found in the circuit, suspect the following component(s):- INJ5 connector- INJ5- ECM connector- ECM<br>**No**<br>GO to M8. |
| **M8: CHECK WHETHER THE SHORT CIRCUIT TO POWER IS IN THE HARNESS OR INJ5** | |
| | 1 Key off. |
| | 2 INJ5 solenoid connector disconnected. |
| | 3 Key on, engine off. |
| | 4 Measure the resistance between: |
| | Fuel injector, cylinder 6 - control - Pin B-M2 — Positive post |
| | Fuel injector, cylinder 6 - ground - Pin B-M3 — Positive post |
| | Are the resistances greater than 100 Kohms?<br>**Yes**<br>Harness is OK.Suspect:- INJ5<br>**No**<br>REPAIR the short circuit. For additional information, refer to the wiring diagrams. |
| **M9: CHECK WHETHER THE SHORT CIRCUIT IS IN THE HARNESS OR THE INJ5 COMPONENT** | |
| | 1 Key off. |
| | 2 INJ5 solenoid connector disconnected. |
| | 3 Key on, engine off. |
| | 4 Measure the resistance between: |
| | Fuel injector, cylinder 6 - control - Pin B-M2 — Fuel injector, cylinder 6 - ground - Pin B-M3 |
| | Is the resistance greater than 100 Kohms?<br>**Yes**<br>Harness is OK.Suspect- INJ5<br>**No**<br>REPAIR the short circuit. For additional information, refer to the wiring diagrams. |

GETtheMANUALS.org

# Fuel Charging and Controls - 2.7L V6 - TdV6 - Fuel Injection Component Cleaning

General Procedures

• WARNINGS:

Do not carry out any repairs to the fuel system with the engine running. The fuel pressure within the system can be as high as 2000 bar. Failure to follow this instruction may result in personal injury.

Do not smoke or carry lighted tobacco or open flame of any type when working on or near any fuel related components. Highly flammable vapors are always present and may ignite. Failure to follow these instructions may result in personal injury.

If fuel contacts the eyes, flush the eyes with cold water or eyewash solution and seek immediate medical attention.

Place the vehicle in a well ventilated, quarantined area and arrange ' No Smoking/Petrol Fumes' signs about the vehicle.

Wait at least 30 seconds after the engine stops before commencing any repair to the high-pressure fuel injection system. Failure to follow this instruction may result in personal injury.

Wash hands thoroughly after fuel handling, as prolonged contact may cause irritation. Should irritation develop, seek medical attention.

Do not carry or operate cellular phones when working on or near any fuel related components. Highly flammable vapors are always present and may ignite. Failure to follow these instructions may result in personal injury.

• CAUTIONS:

Before using the cleaning fluid, protect all electrical components and connectors with lint-free non-flocking material.

Make sure that all parts removed from the vehicle are placed on the lint-free non-flocking material.

Make sure that any protective clothing worn is clean and made from lint-free non-flocking material.

Make sure that clean non-plated tools are used. Clean tools using a new brush that will not lose its bristles and fresh cleaning fluid, prior to starting work on the vehicle.

Use a steel topped workbench and cover it with clean, lint-free non-flocking material.

Make sure the workshop area in which the vehicle is being worked on is as clean and as dust free as possible. Foreign matter from work on clutches, brakes or from machining or welding operations can contaminate the fuel system and may result in later malfunction.

• NOTE: Pneumatic vacuum gun

1. Using a new brush that will not lose its bristles, brush cleaning fluid onto the components being removed and onto the surrounding area.
2. Using a pneumatic vacuum gun, remove all traces of cleaning fluid and foreign material.
3. Dispose of any used cleaning fluid and the brush after completing the repair.

GETtheMANUALS.org

# Fuel Charging and Controls - 2.7L V6 - TdV6 - Fuel Injection Pump

Removal and Installation

| Special Tool(s) | |
|---|---|
| 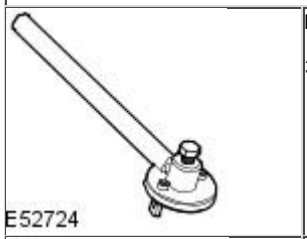 E52724 | Reaction Arm - Fuel Pump Pulley<br><br>310-138 |
| 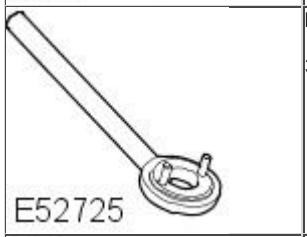 E52725 | Holder - Fuel Pump Pulley<br><br>310-139 |
| 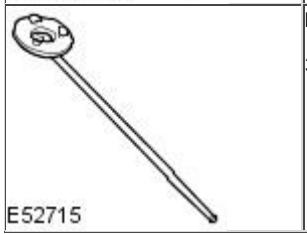 E52715 | Holder - Camshaft Pulley Rear<br><br>303-1125 |

## Removal

• WARNINGS:

Wait at least 30 seconds after the engine stops before commencing any repair to the high pressure fuel injection system. Failure to follow this instruction may result in personal injury.

Do not smoke or carry lighted tobacco or open flame of any type when working on or near any fuel related components. Highly flammable mixtures are always present and may ignite. Failure to follow these instructions may result in personal injury.

This procedure involves fuel handling. Be prepared for fuel spillage at all times and always observe fuel handling precautions. Failure to follow these instructions may result in personal injury.

Do not carry out any repairs to the fuel system with the engine running. The fuel pressure within the high-pressure system can be as high as 1650 bar. Failure to follow this instruction may result in personal injury.

• CAUTIONS:

Make sure the workshop area in which the vehicle is being worked on is as clean and as dust free as possible. Foreign matter from work on clutches, brakes or from machining or welding operations can contaminate the fuel system and may result in later malfunction.

Always carry out the cleaning process before carrying out any repairs to the fuel injection system components. Failure to follow this instruction may result in foreign matter ingress to the fuel injection system.

Diesel fuel injection equipment is manufactured to very precise tolerances and fine clearances. It is therefore essential that absolute cleanliness is observed when working with these components. Always install blanking plugs to any open orifices or lines.

Do not disassemble or clean inside the fuel pump, even with an ultrasonic cleaner. Always install a new fuel pump when required.

• NOTE: If the fuel pump has suffered a major mechanical failure, new fuel injectors should also be installed.

All vehicles

1. Disconnect the battery.
   For additional information, refer to: Battery Disconnect and Connect (414-01 Battery, Mounting and Cables, General Procedures).

GETtheMANUALS.org

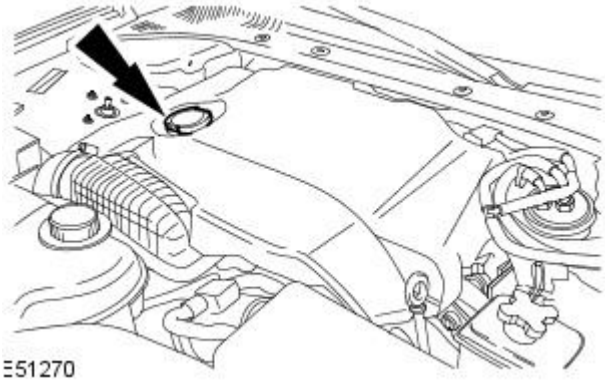


**2.** Remove the oil filler cap.

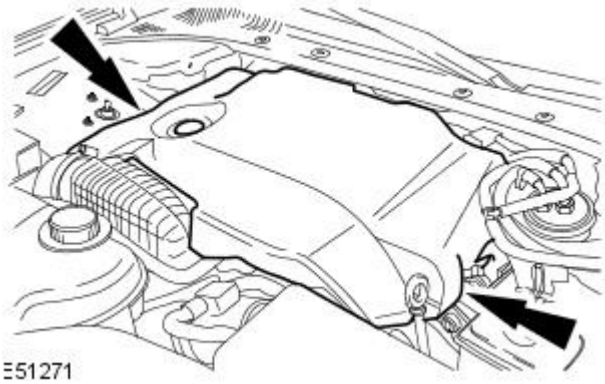


**3.** Remove the engine cover.

Right-hand drive vehicles

**4.** Remove the cabin air filter.
For additional information, refer to: Cabin Air Filter (412-01 Air Distribution and Filtering, Removal and Installation).

**5.** Remove the engine compartment support.

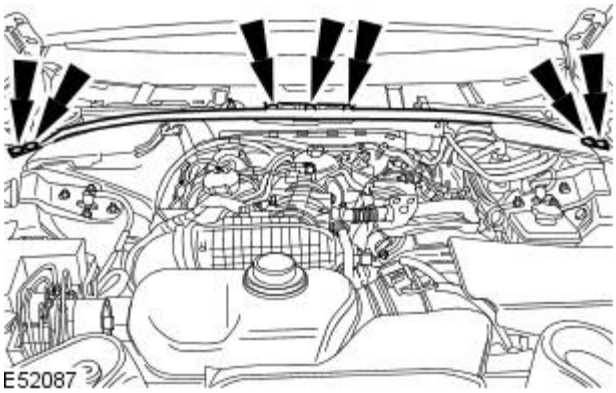


**6.** Remove the cabin air filter housing retaining nut.

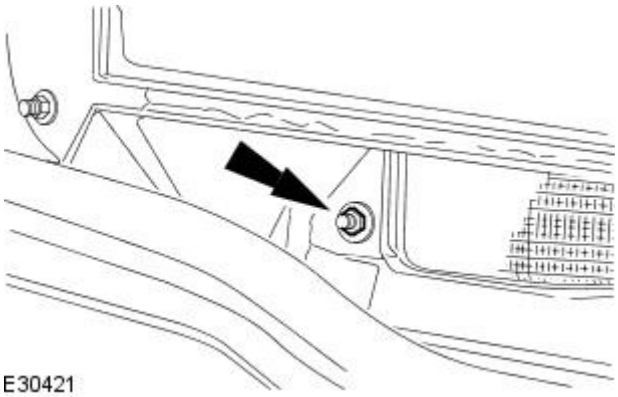


GETtheMANUALS.org

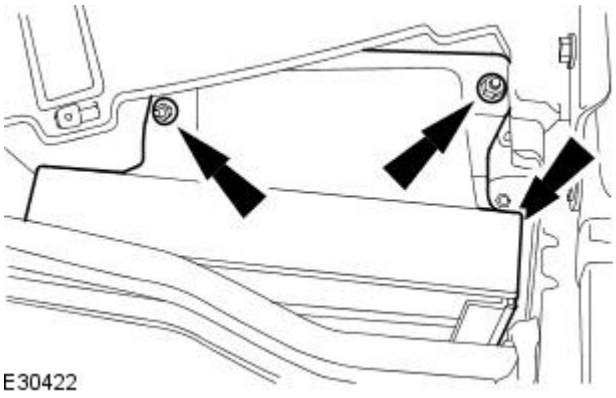


**7.** Remove the cabin air filter housing.

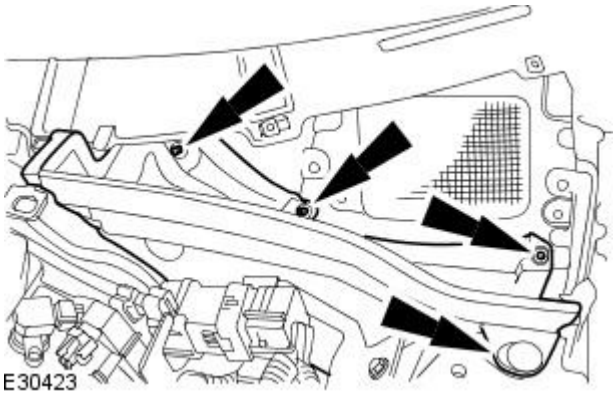


**8.** Remove the engine compartment panel.

Left-hand drive vehicles

**9.** Remove the wiper mounting arm and pivot shaft.
For additional information, refer to: Wiper Mounting Arm and Pivot Shaft (501-16 Wipers and Washers, Removal and Installation).

All vehicles

**10.** Remove the engine compartment access panel.

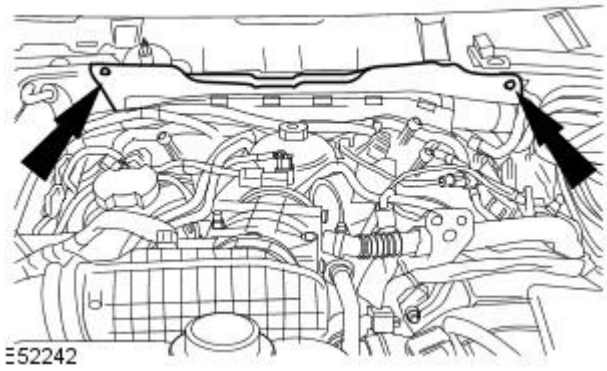


GETtheMANUALS.org

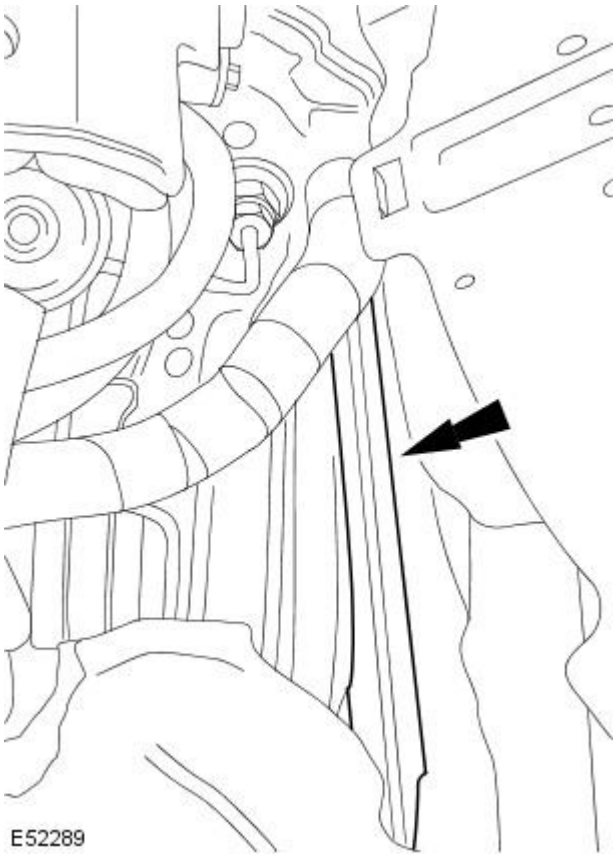


**11.** Remove the engine compartment access panel retaining strip.

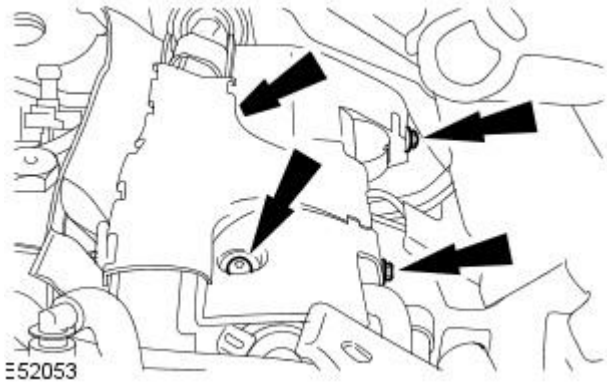


**12.** Remove the engine harness retaining bolts.

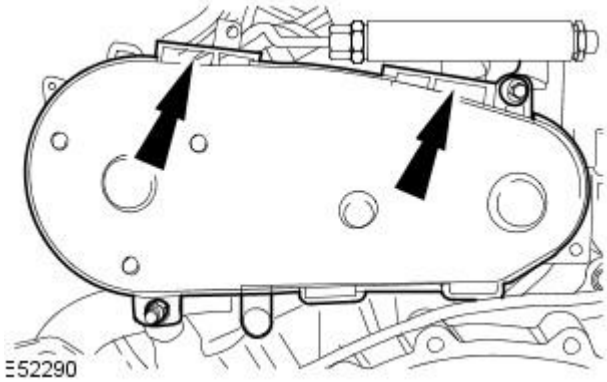


**13.** Remove the fuel injection pump belt cover.

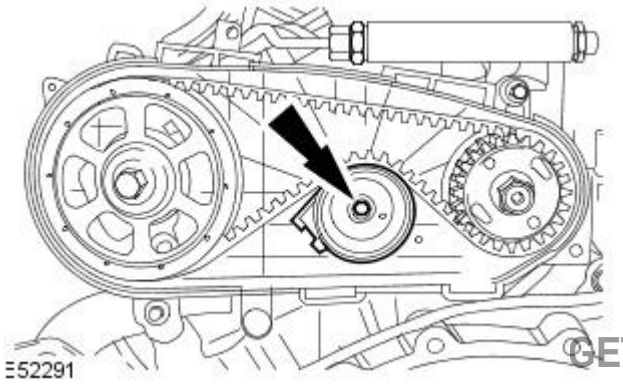


**14.** NOTE: The fuel injection pump belt is not timed to the engine.

Remove and discard the fuel injection pump belt tensioner.

GETtheMANUALS.org

**15.** NOTE: The fuel injection pump rotates in an anti-clockwise direction when view from the rear of the engine.

Note the direction of rotation of the fuel injection pump belt.

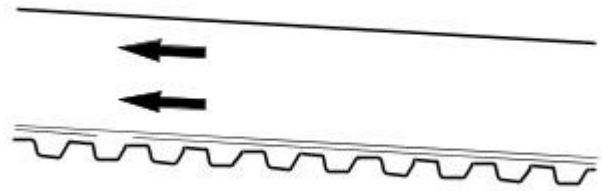

E52241

**16.** Remove and discard the fuel injection pump belt.

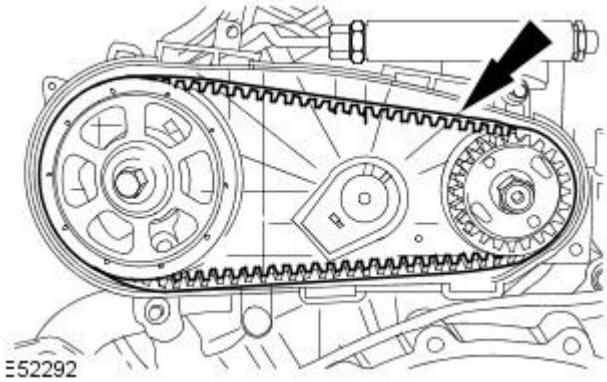

E52292

**17.** Remove the camshaft rear pulley retaining bolt.

- Using the special tool, retain the camshaft rear pulley.
- Remove and discard the retaining bolt.
- Remove the special tool.

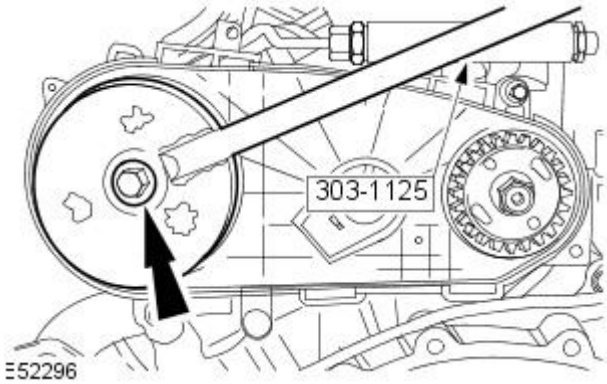


E52296

**18.** Remove the camshaft rear pulley.

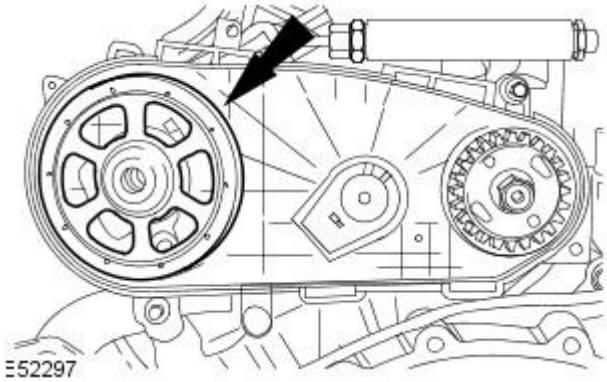

E52297

**19.** Remove the injection pump pulley retaining nut.

- Using the special tool, retain the fuel injection pump pulley.
- Remove the special tool.

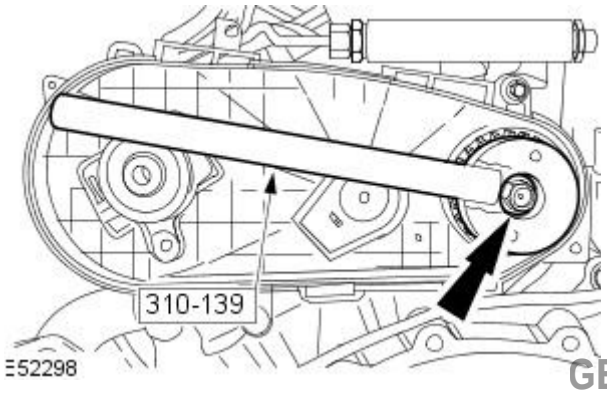


E52298

GETtheMANUALS.org

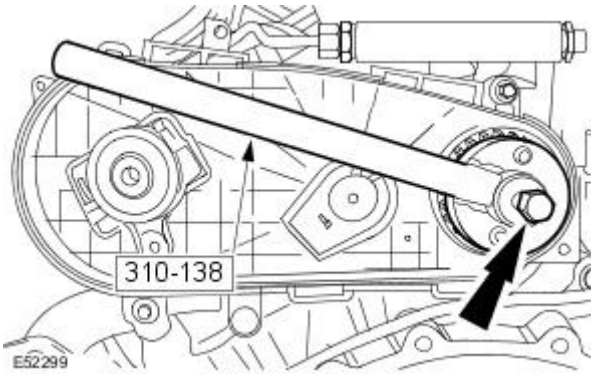


**20.** Using the special tool, remove the fuel injection pump pulley.

- Remove the special tool.

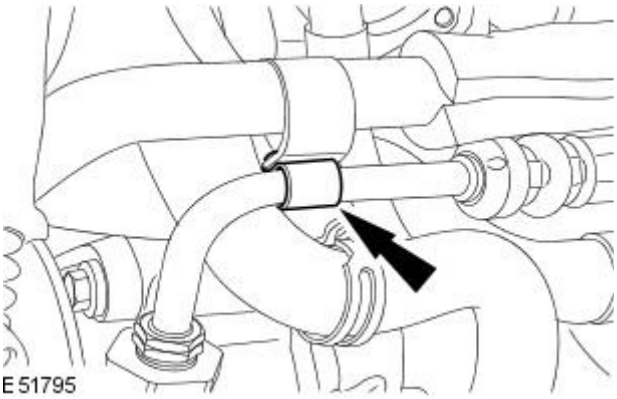


**21.** Detach the exhaust gas recirculation (EGR) coolant outlet tube.

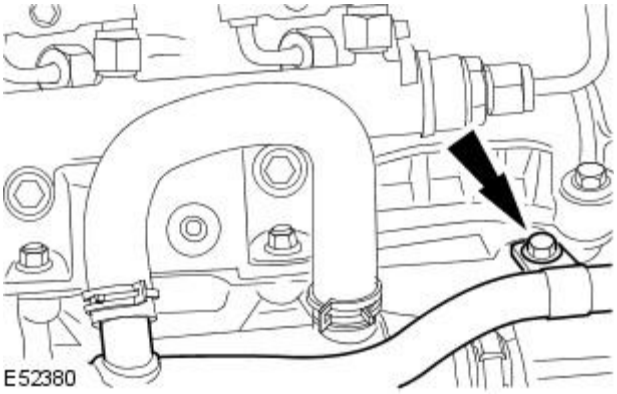


**22.** Detach the EGR coolant outlet tube.

**23.** Remove the left-hand catalytic converter.
For additional information, refer to: Catalytic Converter - 2.7L V6 - TdV6 (309-00 Exhaust System, Removal and Installation).

**24.** Detach the EGR coolant outlet tube.

- Remove the retaining nut.
- Reposition the EGR coolant outlet tube.

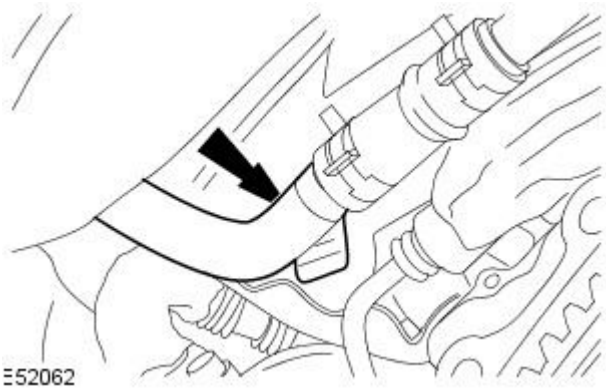


GETtheMANUALS.org

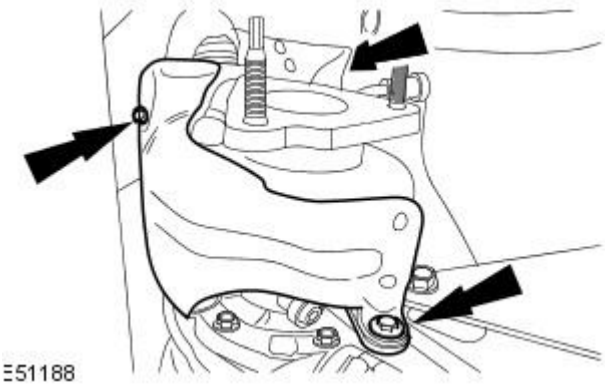


**25.** Remove the turbocharger heat shield.

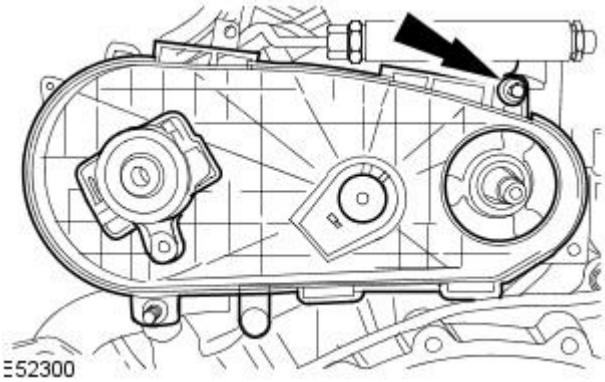


**26.** Remove the fuel injection pump belt rear cover.

**27.** Lower the vehicle.

**28.** Clean around the low pressure fuel inlet and return lines, high-pressure fuel supply lines and surrounding areas.
For additional information, refer to: Fuel Injection Component Cleaning (303-04C Fuel Charging and Controls - 2.7L V6 - TdV6, General Procedures).

**29.** Disconnect the low pressure fuel inlet and return lines.
For additional information, refer to: Quick Release Coupling - Push Connect (310-00 Fuel System - General Information, General Procedures).

- Install suitable blanking caps to the fuel lines and unions.

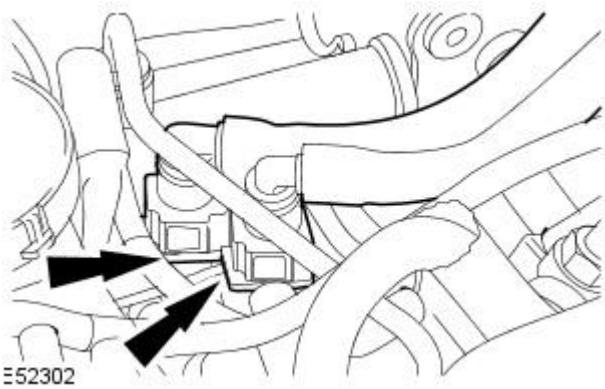


**30.** NOTE: Left-hand shown, right-hand similar.

Detach the high pressure fuel supply line clamps.

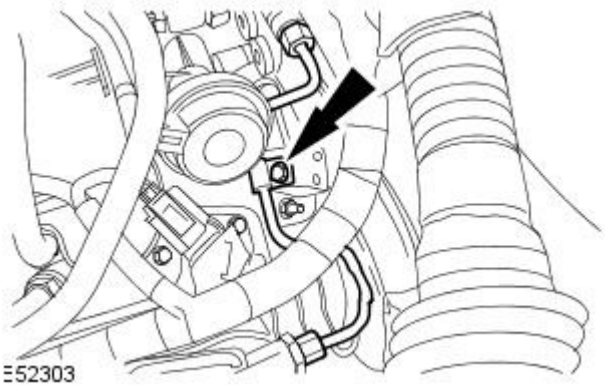


GETtheMANUALS.org

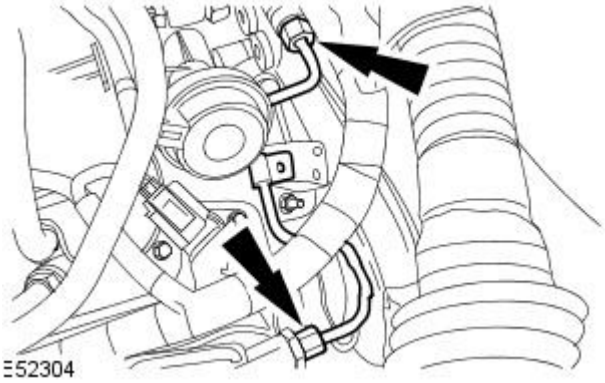


**31.** CAUTION: Make sure that the high-pressure fuel supply line remains in contact with the fuel injection supply manifold and fuel injection diverter rail until both unions have been detached and cleaned. Failure to follow this instruction may result in foreign matter ingress to the fuel injection system.

• NOTE: Left-hand shown, right-hand similar.

Loosen the high pressure fuel supply lines.

**32.** CAUTION: Make sure that the high-pressure fuel supply line remains in contact with the fuel injection supply manifold and fuel injection diverter rail until both unions have been detached and cleaned. Failure to follow this instruction may result in foreign matter ingress to the fuel injection system.

• NOTE: Left-hand shown, right-hand similar.

Using the pneumatic vacuum gun, vacuum foreign material from the high-pressure fuel supply lines, the fuel injection diverter rail and the fuel injection supply manifolds.

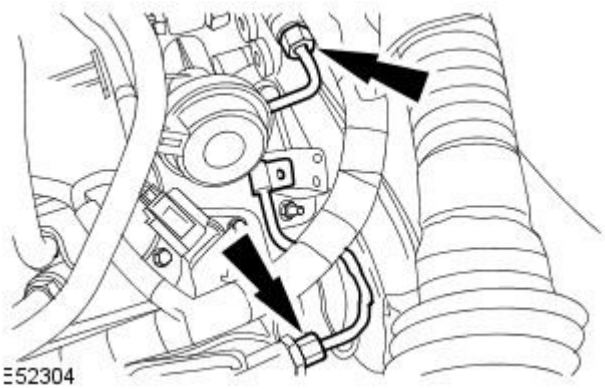


**33.** CAUTION: Make sure that the high-pressure fuel supply line remains in contact with the fuel injection supply manifold and fuel injection diverter rail until both unions have been detached and cleaned. Failure to follow this instruction may result in foreign matter ingress to the fuel injection system.

• NOTE: Left-hand shown, right-hand similar.

Remove and discard the high pressure fuel supply lines.

- Install suitable blanking caps to the open threaded ports on the fuel injection diverter rail and fuel injection supply manifold.

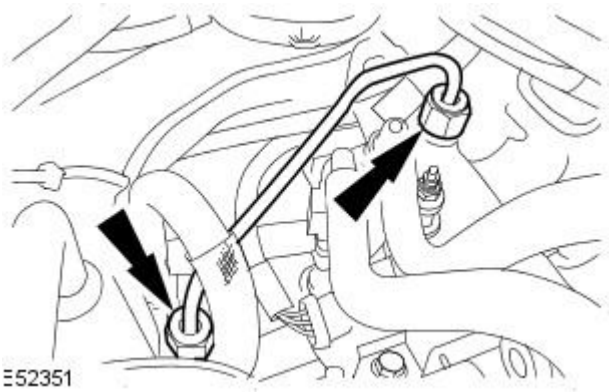


**34.** CAUTIONS:

Make sure that the high-pressure fuel supply line remains in contact with the fuel injection pump and fuel injection diverter rail until both unions have been detached and cleaned. Failure to follow this instruction may result in foreign matter ingress to the fuel injection system.

Make sure that the fuel injection pump adaptor union does not move when loosening the high-pressure fuel supply line at the high pressure pump. Failure to follow this instruction may result in damage to the fuel injection pump or the fuel injection pump adaptor union.

Loosen the high pressure fuel supply line.

**35.** CAUTION: Make sure that the high-pressure fuel supply line remains in contact with the fuel injection pump and fuel injection diverter rail until both unions have been detached and cleaned. Failure to follow this instruction may result in foreign matter ingress to the fuel injection system.

Using the pneumatic vacuum gun, vacuum foreign material from the high-pressure fuel supply lines, the fuel injection diverter rail and the fuel injection pump.

GETtheMANUALS.org

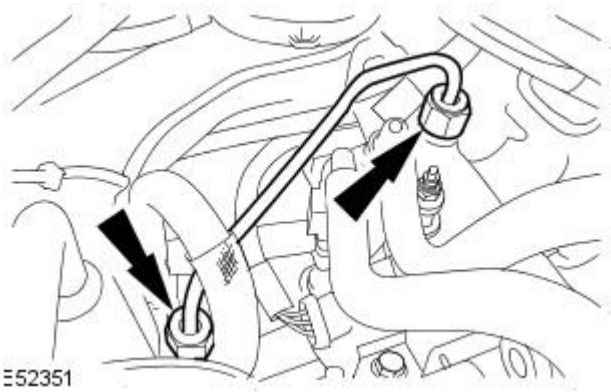


**36.** CAUTION: Make sure that the high-pressure fuel supply line remains in contact with the fuel injection pump and fuel injection diverter rail until both unions have been detached and cleaned. Failure to follow this instruction may result in foreign matter ingress to the fuel injection system.

Remove and discard the high pressure fuel supply line.

- Install suitable blanking caps to the open threaded ports on the fuel injection diverter rail and fuel injection pump.

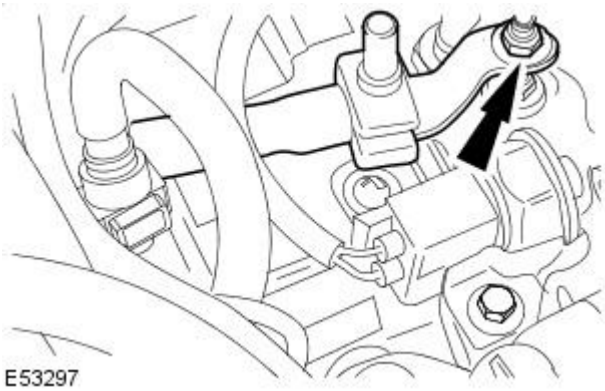


**37.** Detach the low pressure fuel line retaining nut.

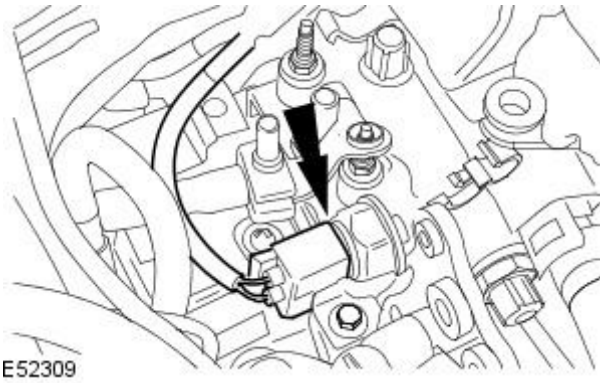


**38.** Disconnect the electrical connector.

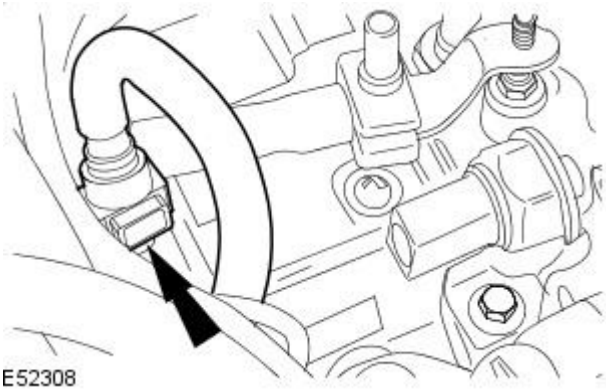


**39.** Disconnect the fuel line.

- Install suitable blanking caps to the fuel line and union.

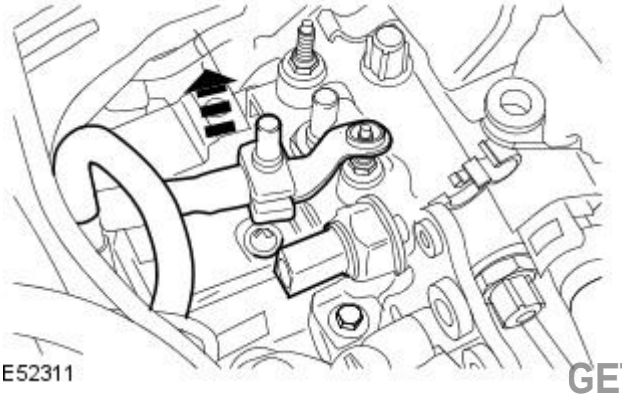


**40.** Detach the fuel line.

- Install suitable blanking caps to the fuel line and union.

GETtheMANUALS.org

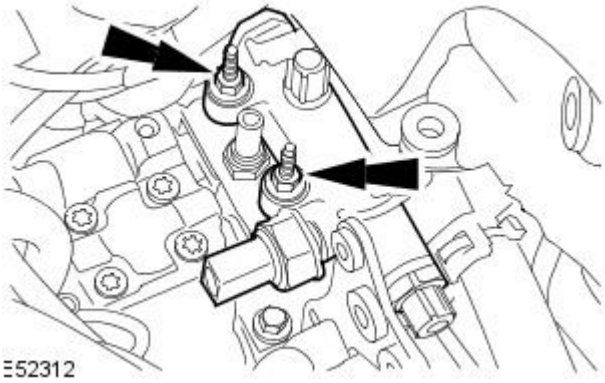


**41.** NOTE: Do not remove the fuel rail pressure sensor from the fuel injection diverter rail.

Remove the fuel injection diverter rail.

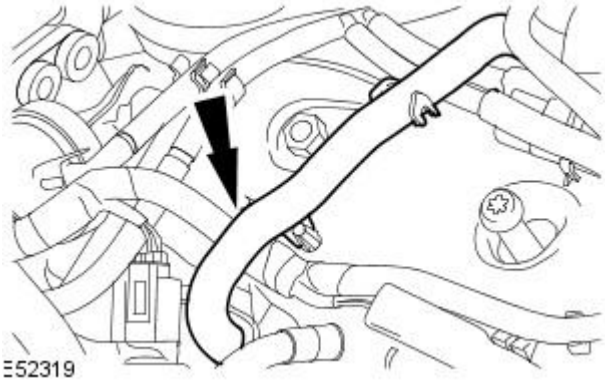


**42.** Disconnect the left-hand camshaft cover breather hose.

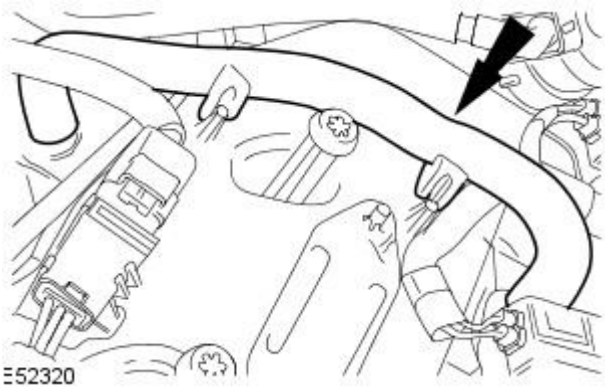


**43.** Disconnect the right-hand camshaft cover breather hose.

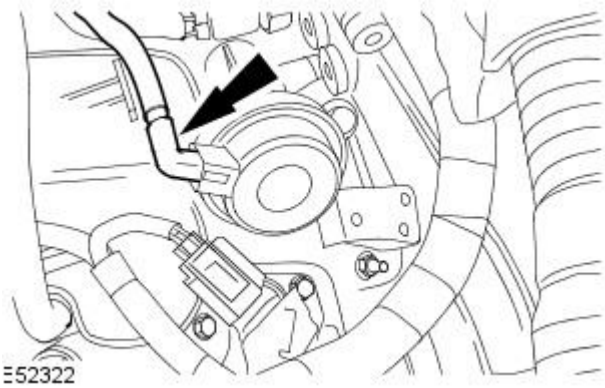


**44.** Disconnect the left-hand inlet port deactivation vacuum pipe.

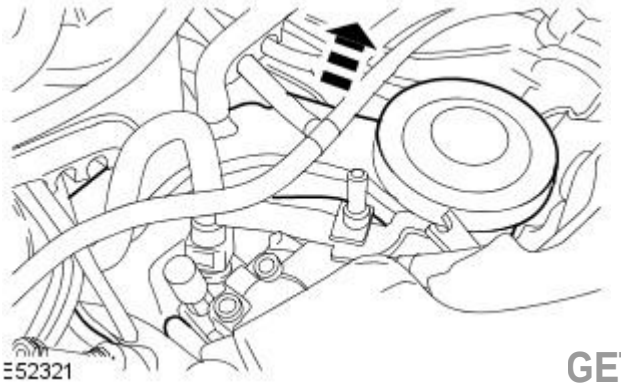


**45.** Remove the oil separator housing.

- Remove and discard the oil separator housing and engine block seals.

GETtheMANUALS.org

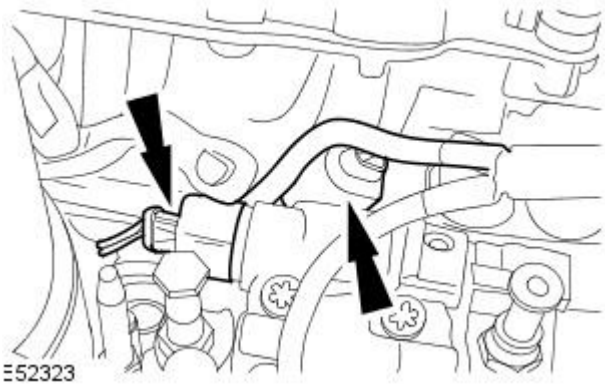


**46.** Disconnect the fuel injection pump electrical connectors.

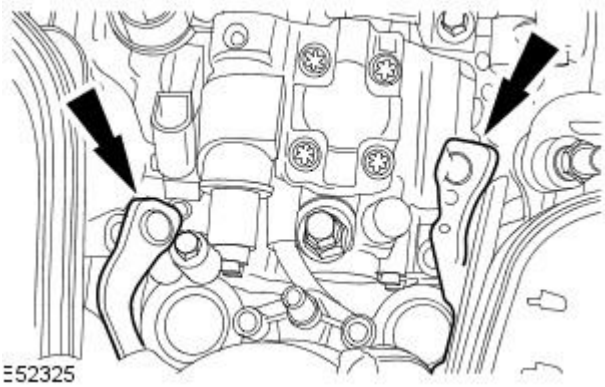


**47.** Detach the glow plug electrical connectors.

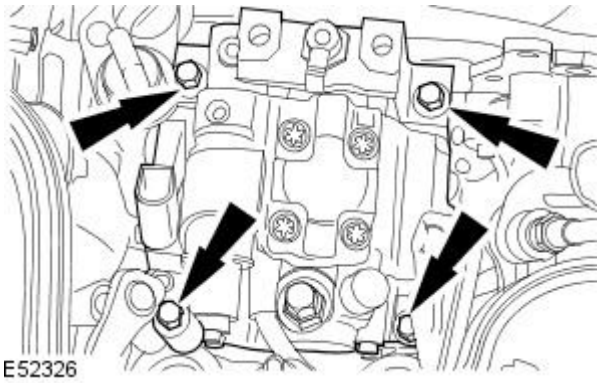


**48.** Remove the fuel injection pump.

## Installation

• WARNINGS:

Do not smoke or carry lighted tobacco or open flame of any type when working on or near any fuel related components. Highly flammable mixtures are always present and may ignite. Failure to follow these instructions may result in personal injury.

This procedure involves fuel handling. Be prepared for fuel spillage at all times and always observe fuel handling precautions. Failure to follow these instructions may result in personal injury.

• CAUTIONS:

Make sure the workshop area in which the vehicle is being worked on is as clean and as dust free as possible. Foreign matter from work on clutches, brakes or from machining or welding operations can contaminate the fuel system and may result in later malfunction.

Always carry out the cleaning process before carrying out any repairs to the fuel injection system components. Failure to follow this instruction may result in foreign matter ingress to the fuel injection system.

Diesel fuel injection equipment is manufactured to very precise tolerances and fine clearances. It is therefore essential that absolute cleanliness is observed when working with these components. Always install blanking plugs to any open orifices or lines.

Do not disassemble or clean inside the fuel pump, even with an ultrasonic cleaner. Always install a new fuel pump when required.

Install new high pressure fuel supply lines. Failure to follow this instruction may result in damage to the vehicle.



GETtheMANUALS.org

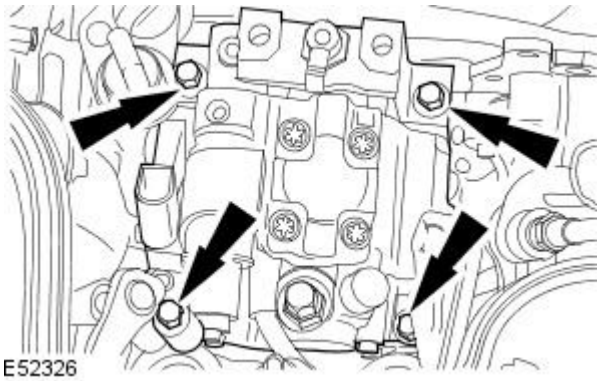


**1.** Install the fuel injection pump.

- Tighten to 23 Nm.

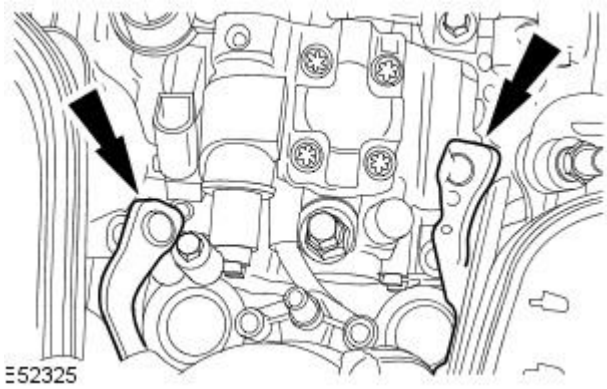


**2.** Attach the glow plug electrical connectors.

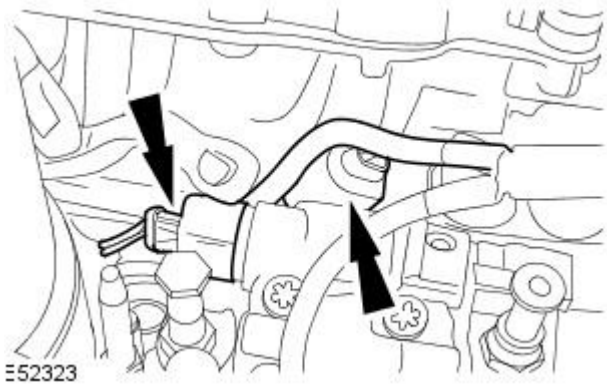


**3.** Connect the fuel pump electrical connectors.

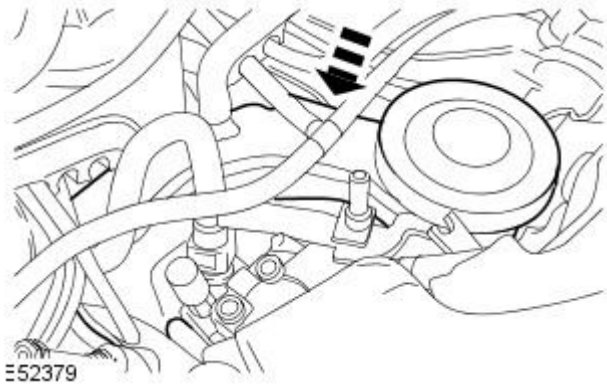


**4.** Install the oil separator housing.

- Install new oil separator housing and engine block seals.

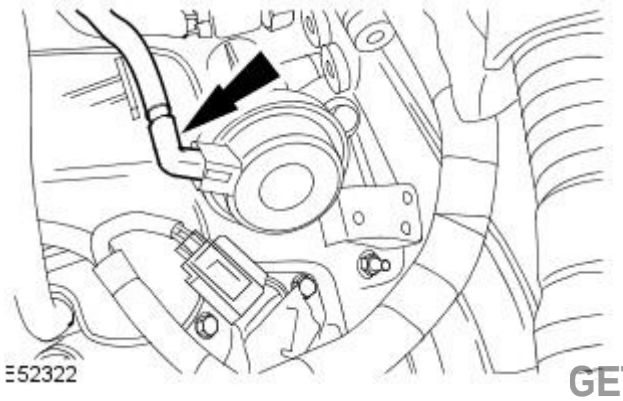


**5.** Connect the left-hand inlet port deactivation vacuum pipe.

GETtheMANUALS.org

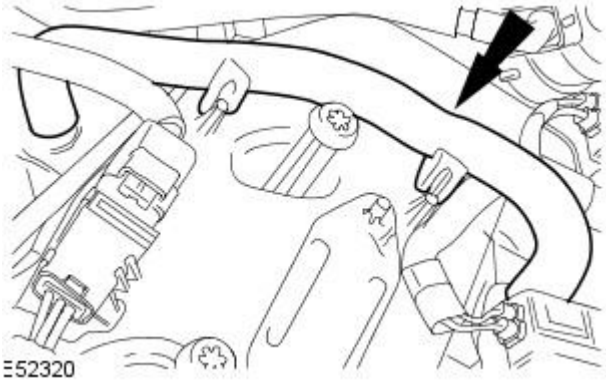


**6.** Connect the left-hand camshaft cover breather hose.

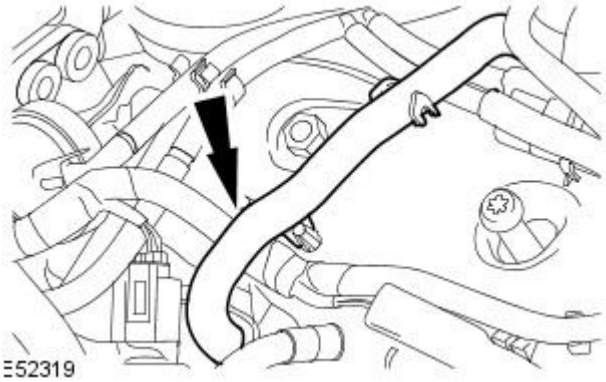


**7.** Connect the right-hand camshaft cover breather hose.

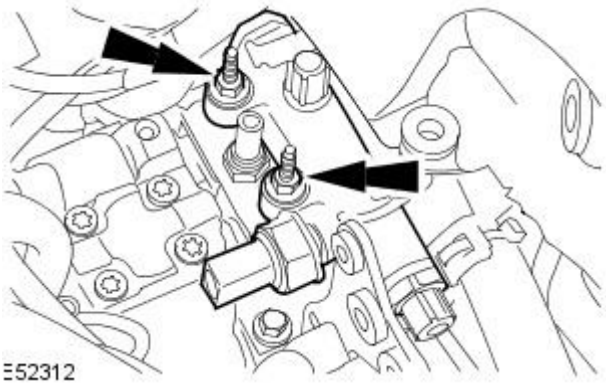


**8.** Install the fuel injection diverter rail.

- Do not fully tighten the fuel injection diverter rail retaining bolts at this stage.

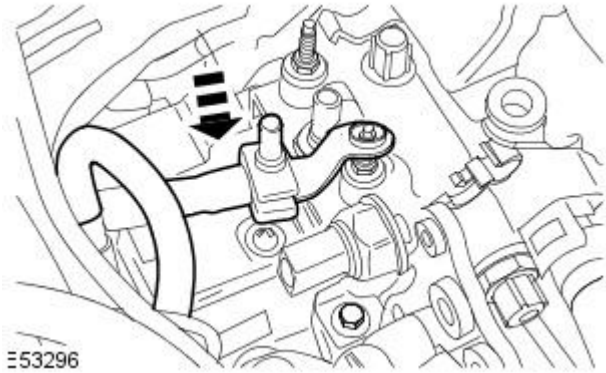


**9.** Attach the fuel line.

- Remove and discard the blanking caps.

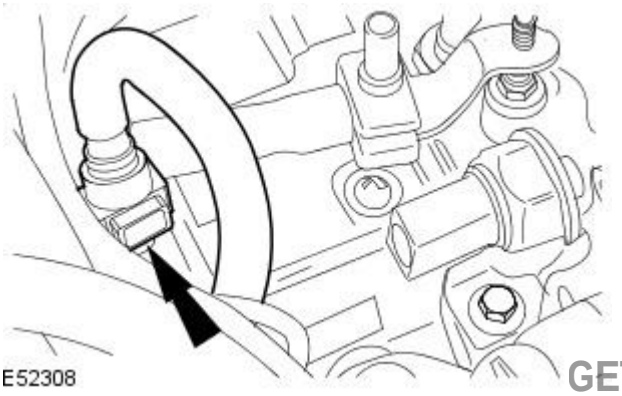


**10.** Connect the fuel line.

GETtheMANUALS.org

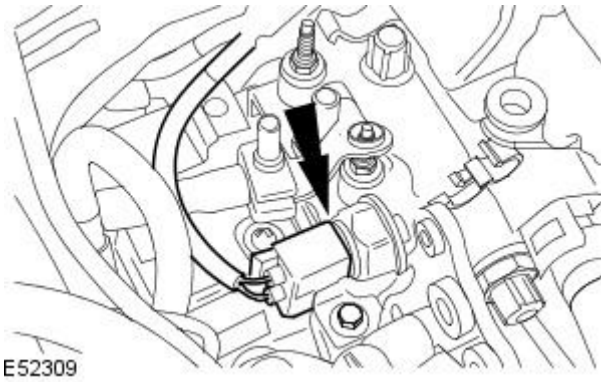


**11.** Connect the electrical connector.

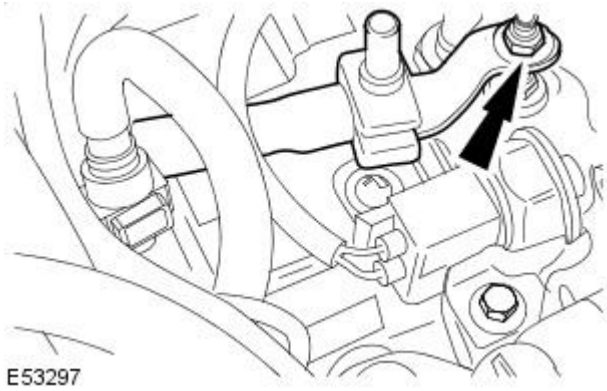


**12.** Attach the fuel line retaining nut.

- Tighten to 7 Nm.

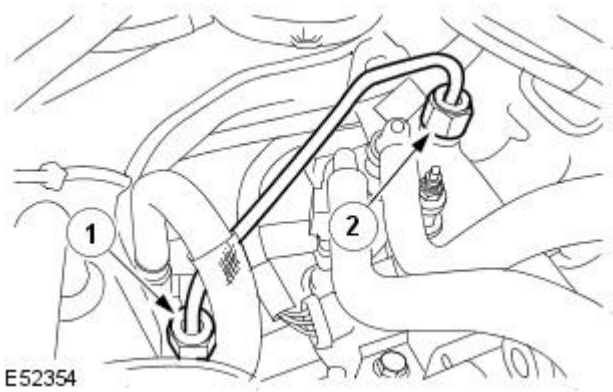


**13.** Install a new high pressure fuel supply line.

- Remove and discard the blanking caps.
- Install but do not tighten the new high pressure fuel supply line.
- Tighten the fuel injection diverter rail retaining bolts to 23 Nm.
- Tighten the high-pressure fuel supply line in the sequence shown in four stages:
  1. Stage 1: Tighten the high-pressure fuel supply line union 1 to 15 Nm.
  2. Stage 2: Tighten the high-pressure fuel supply line union 2 to 15 Nm.
  3. Stage 3: Tighten the high-pressure fuel supply line union 1 to 30 Nm.
  4. Stage 4: Tighten the high-pressure fuel supply line union 2 to 30 Nm.

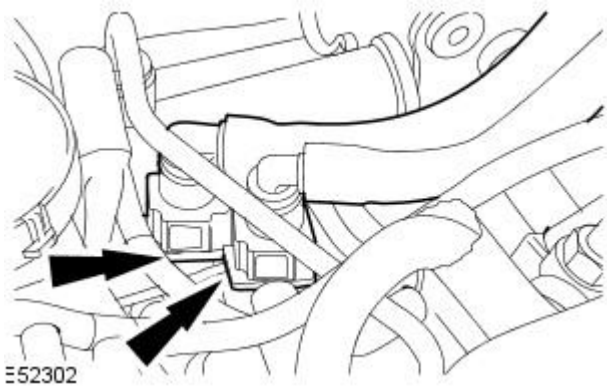


**14.** Connect the low pressure fuel inlet and return lines.
For additional information, refer to: Quick Release Coupling - Push Connect (310-00 Fuel System - General Information, General Procedures).

- Remove and discard the blanking caps.

**www.JagDocs.com**

GETtheMANUALS.org

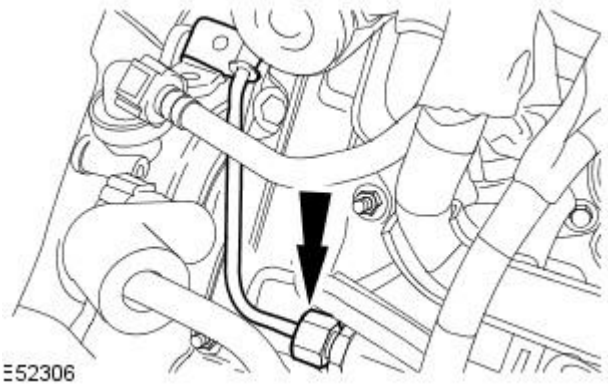


**15.** Install a new right-hand high pressure fuel supply line.

- Remove and discard the blanking caps.
- Tighten the high-pressure fuel supply line union to 15 Nm.

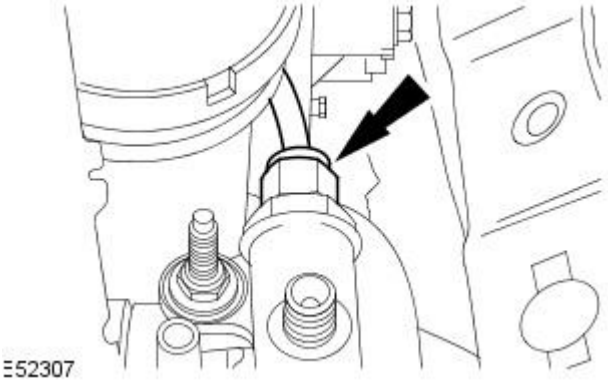


**16.** Tighten the high-pressure fuel supply line union to 15 Nm.

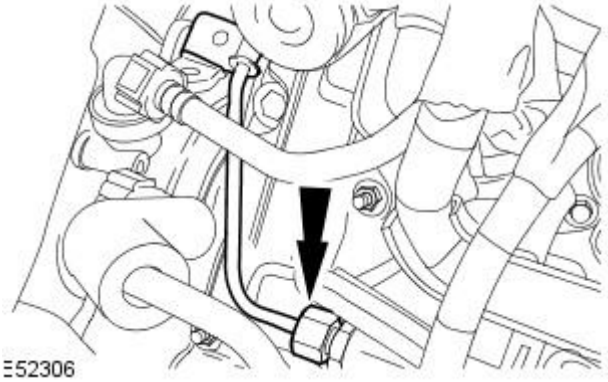


**17.** Tighten the high-pressure fuel supply line union to 30 Nm.

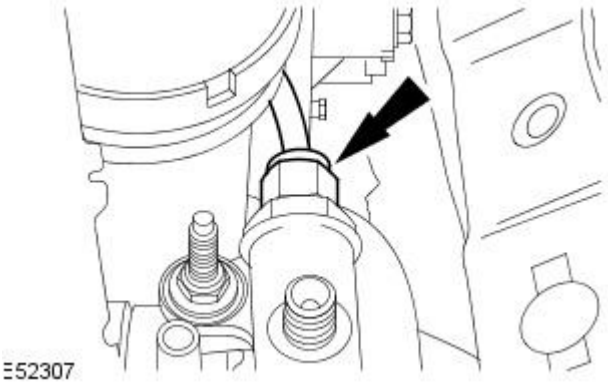


**18.** Tighten the high-pressure fuel supply line union to 30 Nm.

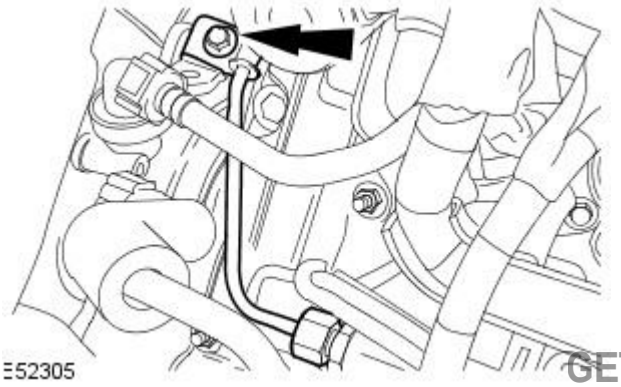


**19.** Tighten the clamp to 10 Nm.

GETtheMANUALS.org

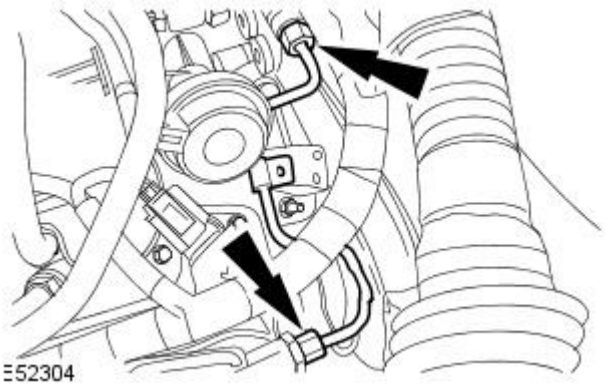


**20.** NOTE: The left-hand high-pressure fuel supply line is tightened after the high pressure fuel system has been bled.

Install the left-hand high-pressure fuel supply line but do not tighten the unions at this stage.

- Remove and discard the blanking caps.

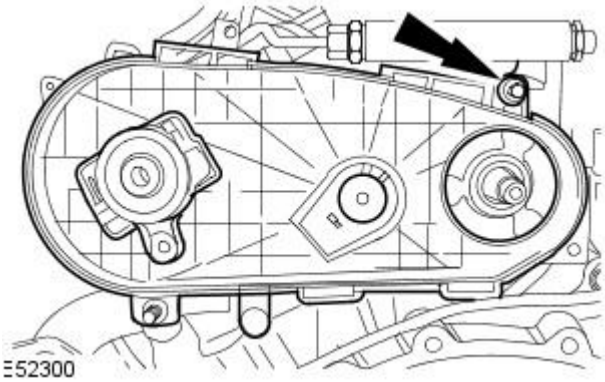


**21.** Install the fuel injection pump belt rear cover.

- Tighten to 7 Nm.

**22.** Raise the vehicle.

**23.** Install the turbocharger heat shield.

- Tighten to 10 Nm.

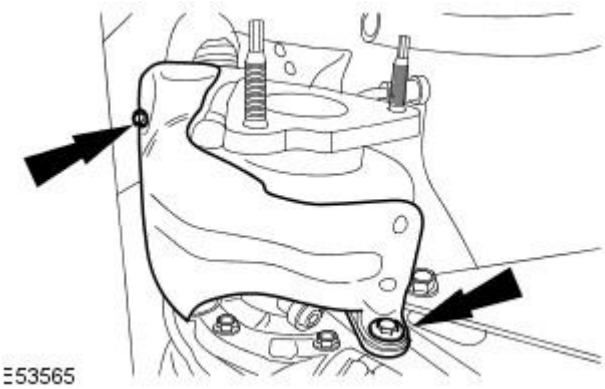


**24.** Tighten to 6 Nm.

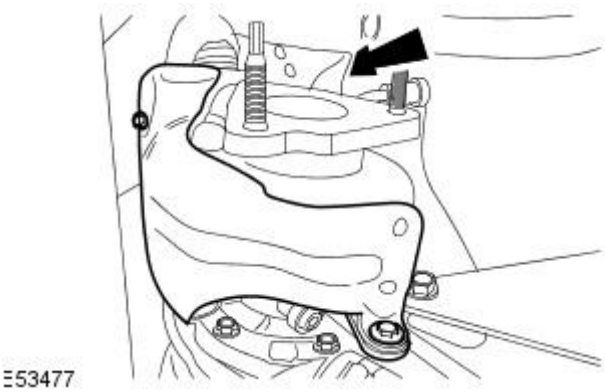


**25.** Attach the EGR coolant outlet tube.

- Tighten to 10 Nm.

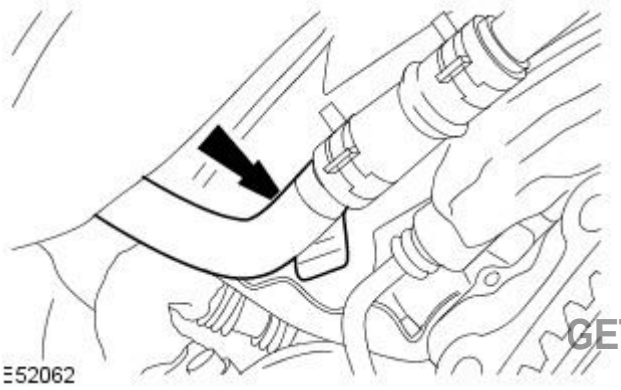


GETtheMANUALS.org

**26.** Install the left-hand catalytic converter.
For additional information, refer to: Catalytic Converter - 2.7L V6 - TdV6 (309-00 Exhaust System, Removal and Installation).

**27.** Attach the EGR coolant outlet tube.

- Tighten to 10 Nm.

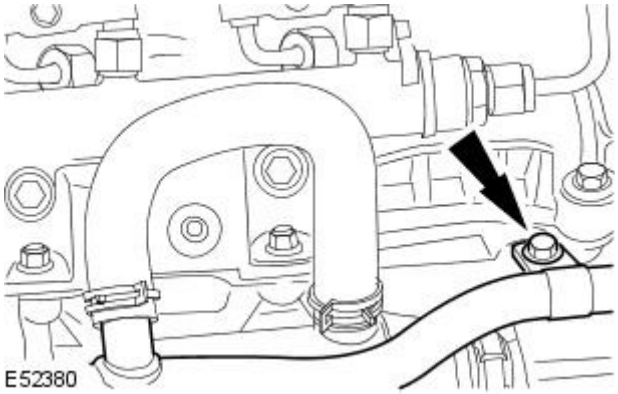


**28.** Attach the EGR coolant outlet tube.

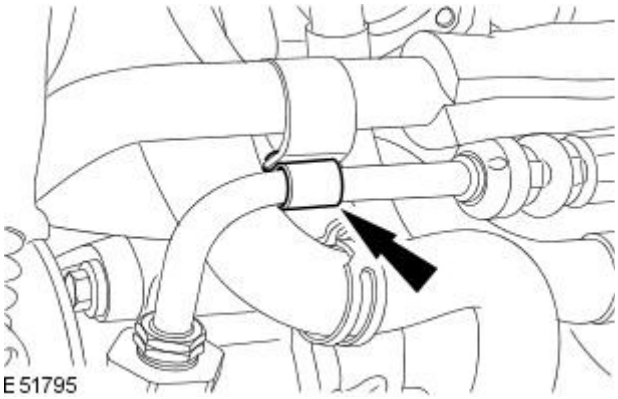


**29.** Install the fuel injection pump pulley.

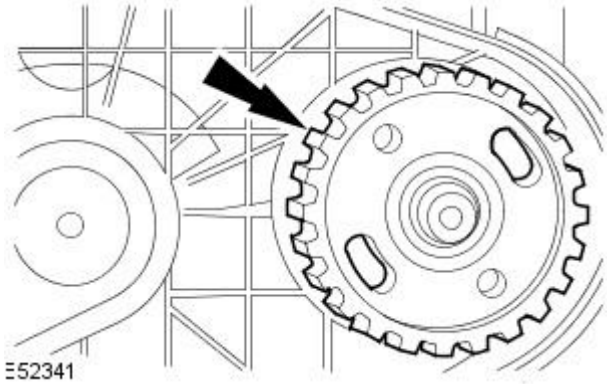


**30.** Install the retaining nut.

- Using the special tool, retain the fuel injection pump pulley.
- Tighten to 50 Nm.

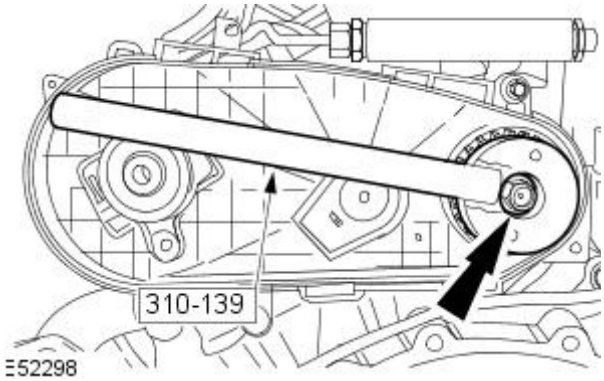


GETtheMANUALS.org

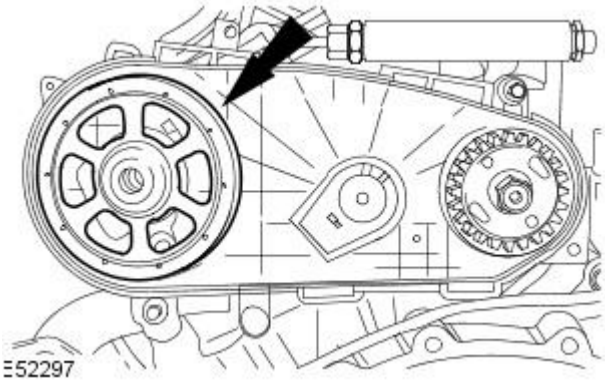


**31.** Install the camshaft rear pulley.

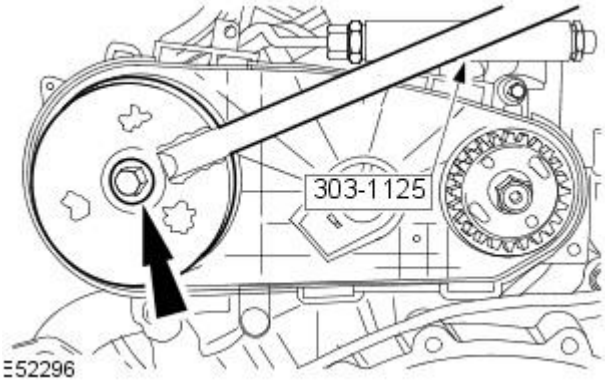


**32.** Install the camshaft rear pulley retaining bolt.

- Using the special tool, retain the camshaft rear pulley.
- Tighten the camshaft rear pulley retaining bolt in two stages:
  1. Tighten to 80 Nm.
  2. Tighten a further 90°
- Remove the special tool.

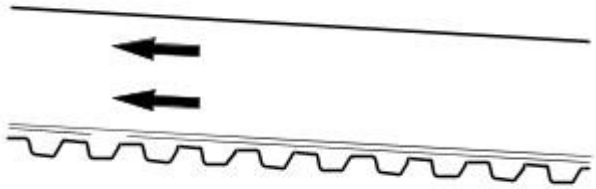


**33.** NOTE: The fuel injection pump rotates in an anti-clockwise direction when view from the rear of the engine.

Note the direction of rotation of the fuel injection pump belt.

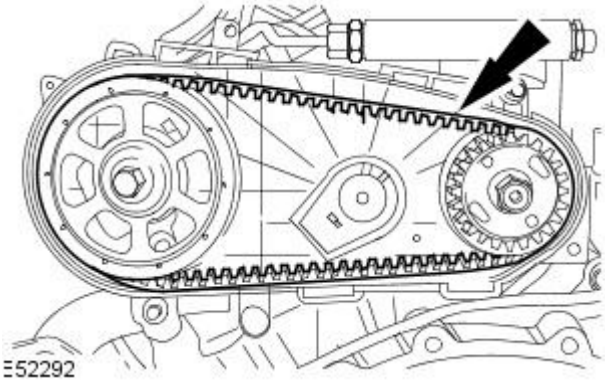


**34.** CAUTION: Do not install the new fuel injection pump belt to the pulleys with the fuel injection pump belt tensioner installed. Failure to follow this instruction may result in damage to the fuel injection pump drive belt.

• NOTE: Make sure the new fuel injection pump belt is correctly seated on to the fuel injection pump drive pulleys.

Install a new fuel injection pump belt.

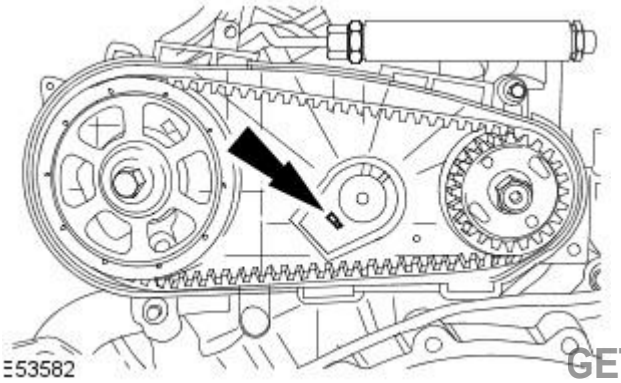


**35.** CAUTION: Make sure the fuel injection pump belt tensioner tang is correctly located to the fuel injection pump cover backplate. Failure to follow this instruction may result in damage to the components.

Install the new fuel injection pump belt tensioner.

- Locate the tang on the new fuel injection pump belt tensioner into the fuel injection pump cover backplate.

GETtheMANUALS.org

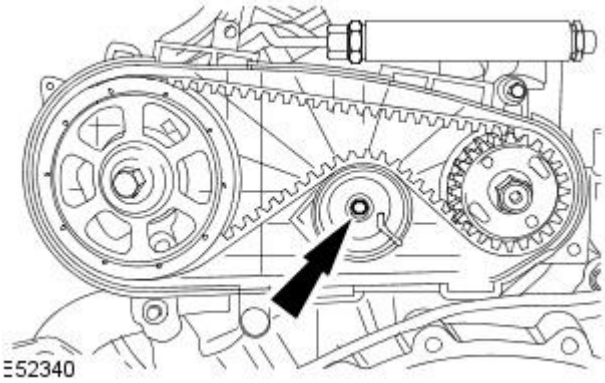


**36.** NOTE: Do not remove the fuel injection pump belt tensioner locking pin before installing the new tensioner.

Install the new fuel injection pump belt tensioner retaining bolt.

- Tighten to 25 Nm.

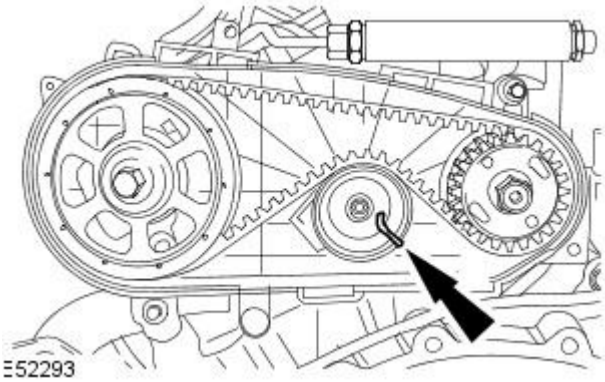


**37.** Remove and discard the fuel injection pump belt tensioner locking pin.

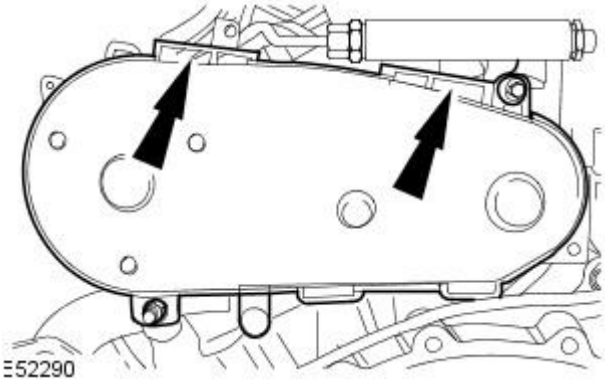


**38.** Install the fuel injection pump belt cover.

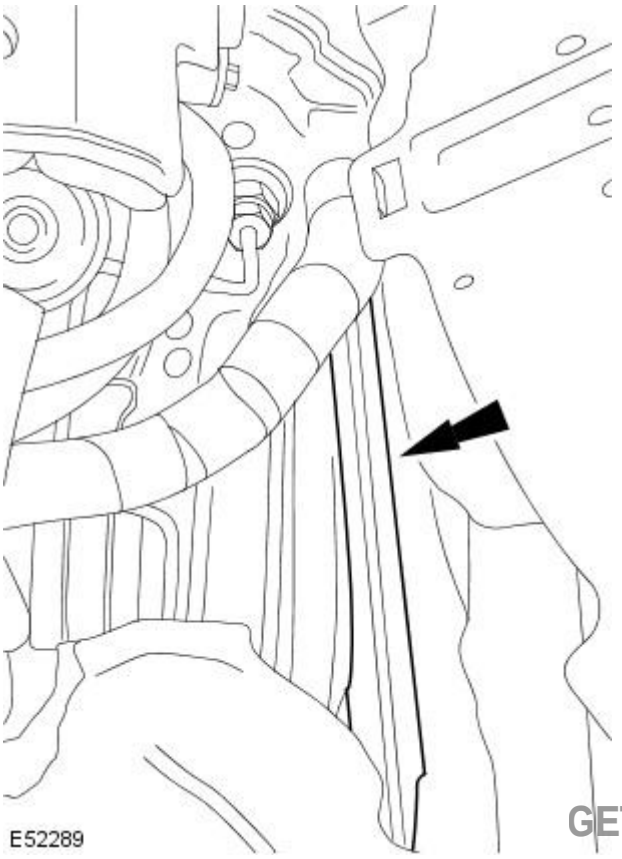


**39.** Install the engine compartment access panel retaining strip.

GETtheMANUALS.org

**40.** Install the engine harness retaining bolts.

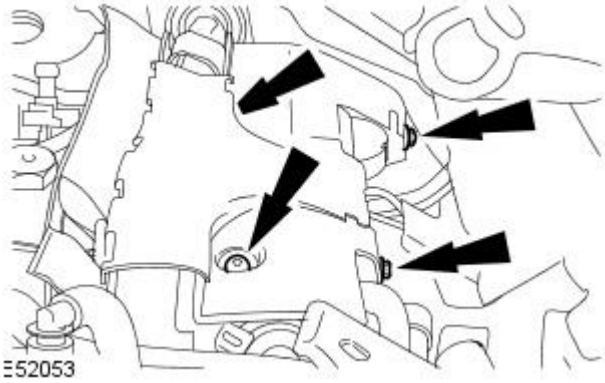


**41.** Install the engine compartment access panel.

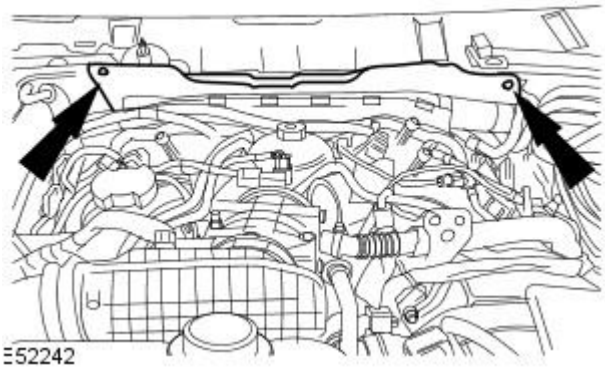


Left-hand drive vehicles

**42.** Install the wiper mounting arm and pivot shaft.
For additional information, refer to: Wiper Mounting Arm and Pivot Shaft (501-16 Wipers and Washers, Removal and Installation).

Right-hand drive vehicles

**43.** Install the engine compartment panel.

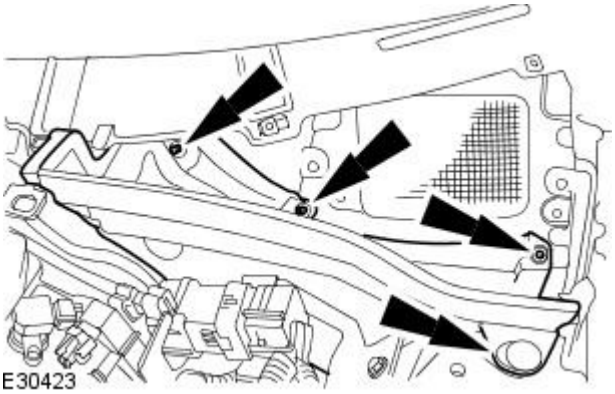


**44.** Install the cabin air filter housing.

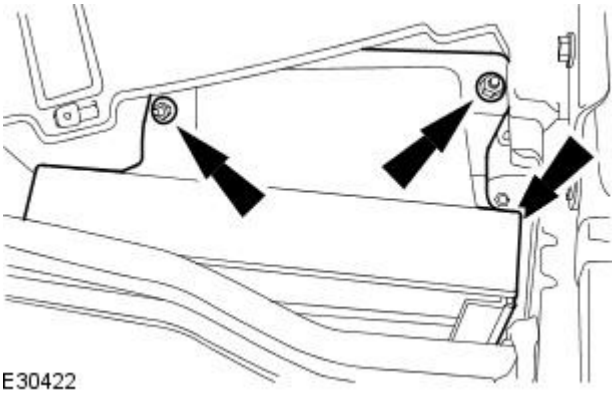


GETtheMANUALS.org

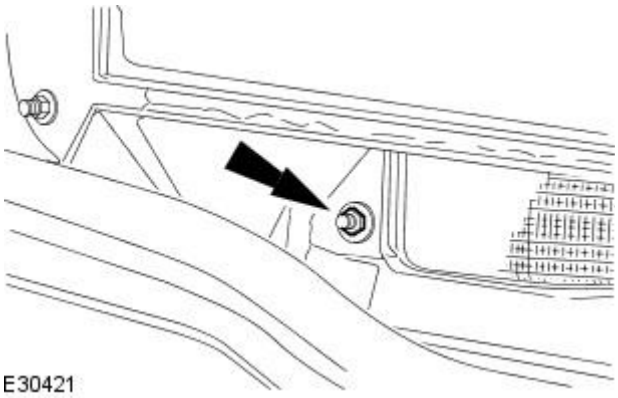


**45.** Install the cabin air filter housing retaining nut.

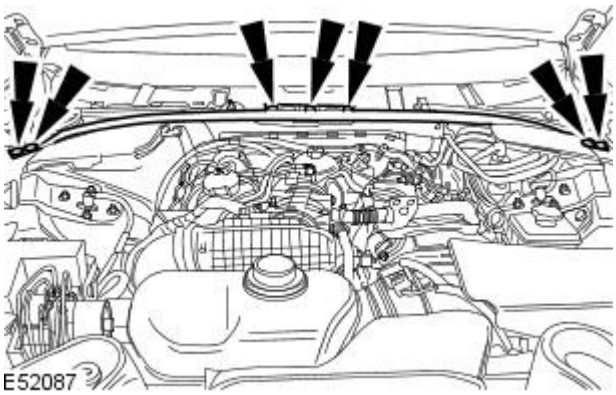


**46.** Install the engine compartment support.

- Tighten to 25 Nm.

**47.** Install the cabin air filter.
For additional information, refer to: Cabin Air Filter (412-01 Air Distribution and Filtering, Removal and Installation).

All vehicles

**48.** Connect the battery.
For additional information, refer to: Battery Connect (414-01 Battery, Mounting and Cables, General Procedures).

**49.** Bleed the high-pressure fuel system.
For additional information, refer to: High-Pressure Fuel System Bleeding (310-00 Fuel System - General Information, General Procedures).

**50.** Install the engine cover.

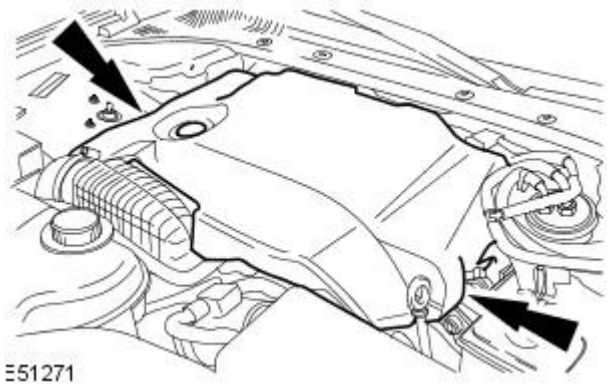


**51.** Install the oil filler cap.

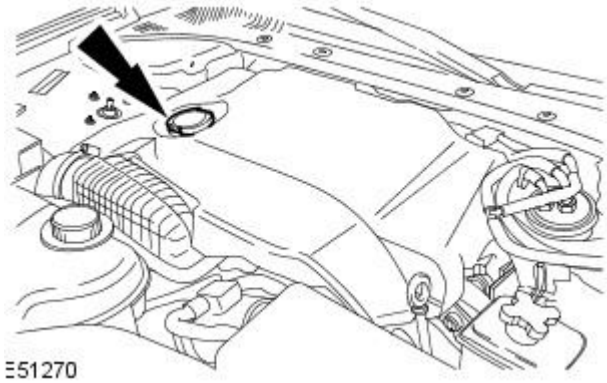


GETtheMANUALS.org

# Fuel Charging and Controls - 2.7L V6 - TdV6 - Fuel Injector

Removal and Installation

| Special Tool(s) | |
|---|---|
| 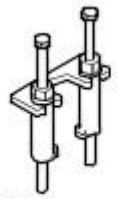 E52726 | Fuel Injector Remover<br><br>303-1127 |

**General Equipment**

| |
|---|
| Pneumatic vacuum gun |

## Removal

**1.** WARNINGS:

Wait at least 30 seconds after the engine stops before commencing any repair to the high-pressure fuel injection system. Failure to follow this instruction may result in personal injury.

Do not smoke or carry lighted tobacco or open flame of any type when working on or near any fuel related components. Highly flammable mixtures are always present and may ignite. Failure to follow these instructions may result in personal injury.

This procedure involves fuel handling. Be prepared for fuel spillage at all times and always observe fuel handling precautions. Failure to follow these instructions may result in personal injury.

Do not carry out any repairs to the fuel system with the engine running. The fuel pressure within the high-pressure fuel system can be as high as 1650 bar. Failure to follow this instruction may result in personal injury.

• CAUTIONS:

Do not disconnect the fuel injector electrical connectors with the engine running. Failure to follow this instruction may result in serious damage to the engine.

Make sure the workshop area in which the vehicle is being worked on is as clean and as dust free as possible. Foreign matter from work on clutches, brakes or from machining or welding operations can contaminate the fuel system and may result in later malfunction.

Always carry out the cleaning process before carrying out any repairs to the fuel injection system components. Failure to follow this instruction may result in foreign matter ingress to the fuel injection system.

Diesel fuel injection equipment is manufactured to very precise tolerances and fine clearances. It is therefore essential that absolute cleanliness is observed when working with these components. Always install blanking plugs to any open orifices or lines.

Do not disassemble the fuel injectors or clean the nozzles, even with an ultrasonic cleaner. Always install new fuel injectors when required.

Disconnect the battery ground cable.
For additional information, refer to: Battery Disconnect and Connect (414-01 Battery, Mounting and Cables, General Procedures).

**2.** Remove the exhaust gas recirculation (EGR) valve outlet tube.
For additional information, refer to: Exhaust Gas Recirculation (EGR) Valve Outlet Tube (303-08B Engine Emission Control - 2.7L V6 - TdV6, Removal and Installation).

**3.** Remove the injector sound proofing.

**4.** CAUTION: Protect the fuel injector electrical connectors with lint-free material to prevent contamination from the cleaning fluid.

Clean the fuel injector, high-pressure fuel supply line and surrounding areas.
For additional information, refer to: Fuel Injection Component Cleaning (303-04C Fuel Charging and Controls - 2.7L V6 - TdV6, General Procedures).

GETtheMANUALS.org

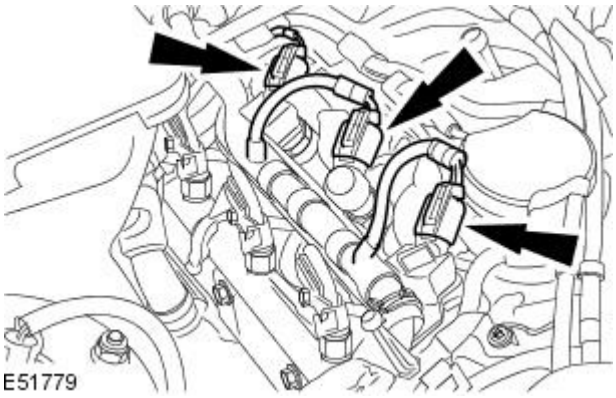


**5.** NOTE: Right-hand shown, left-hand similar.

Disconnect the fuel injector electrical connectors.

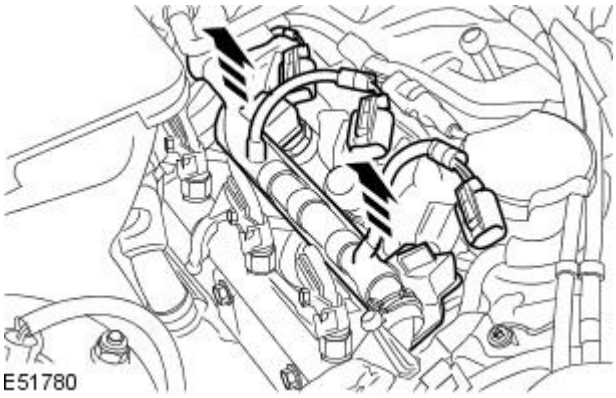


**6.** NOTE: Right-hand shown, left-hand similar.

Detach the fuel injection wiring harness.

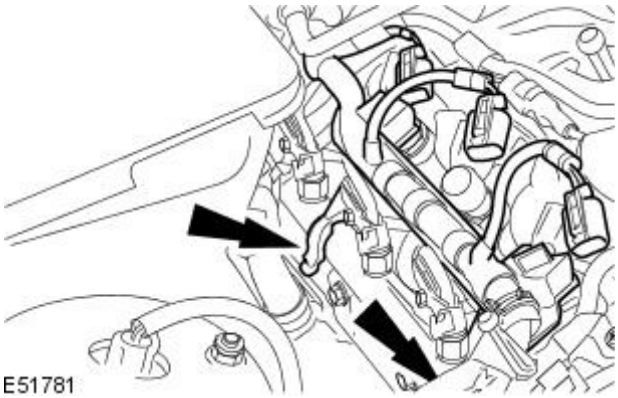


**7.** NOTE: Right-hand shown, left-hand similar.

Detach the fuel injection wiring harness.

**8.** Clean around the fuel injector, high-pressure fuel supply line and surrounding areas.
For additional information, refer to: Fuel Injection Component Cleaning (303-04C Fuel Charging and Controls - 2.7L V6 - TdV6, General Procedures).

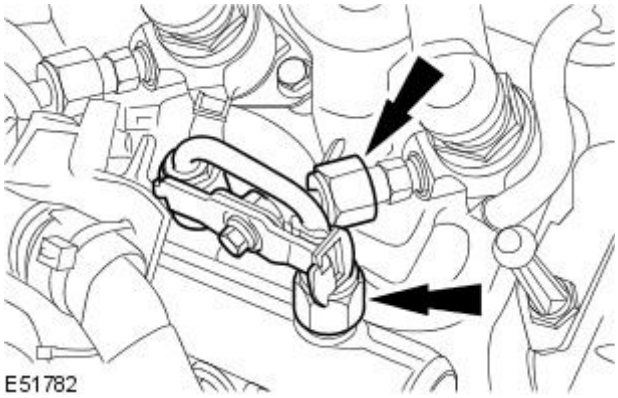


**9.** CAUTIONS:

Make sure that the high-pressure fuel supply line remains in contact with both the fuel injector and the fuel injection supply manifold until both unions have been detached and cleaned. Failure to follow this instruction may result in foreign matter ingress to the fuel injection system.

Make sure that the fuel injector adaptor union does not move when loosening the high-pressure fuel supply lines. Failure to follow this instruction may result in damage to the fuel injector or the fuel injector adaptor union.

• NOTE: Right-hand shown, left-hand similar.

Loosen the high-pressure fuel supply line from the fuel injector and fuel injection supply manifold.

**10.** CAUTION: Make sure that the high-pressure fuel supply line remains in contact with both the fuel injector and the fuel injection supply manifold until both unions have been detached and cleaned. Failure to follow this instruction may result in foreign matter ingress to the fuel injection system.

Using the pneumatic vacuum gun, vacuum foreign material from the high-pressure fuel supply line, the fuel injector and the fuel injection supply manifold.
For additional information, refer to: Fuel Injection Component Cleaning (303-04C Fuel Charging and Controls - 2.7L V6 - TdV6, General Procedures).

GETtheMANUALS.org

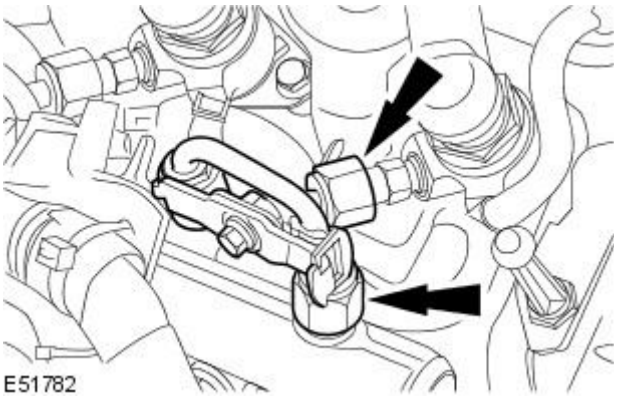


**11.** NOTE: Right-hand shown, left-hand similar.

Remove and discard the high-pressure fuel supply line.

- Install suitable blanking caps to the open threaded ports on the fuel injector and the fuel injection supply manifold.

**12.** Using the pneumatic vacuum gun, vacuum foreign material from the fuel injector and the fuel injection supply manifold.
For additional information, refer to: Fuel Injection Component Cleaning (303-04C Fuel Charging and Controls - 2.7L V6 - TdV6, General Procedures).

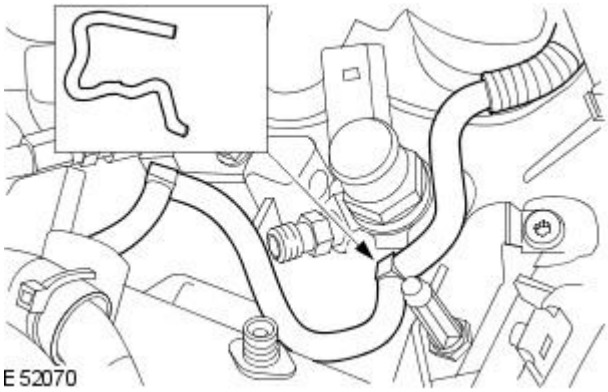


**13.** NOTE: Right-hand shown, left-hand similar.

Disconnect the fuel return line from the fuel injector.

- Remove and discard the fuel return line retaining clip from the fuel injector.
- Disconnect the fuel return line from the fuel injector.

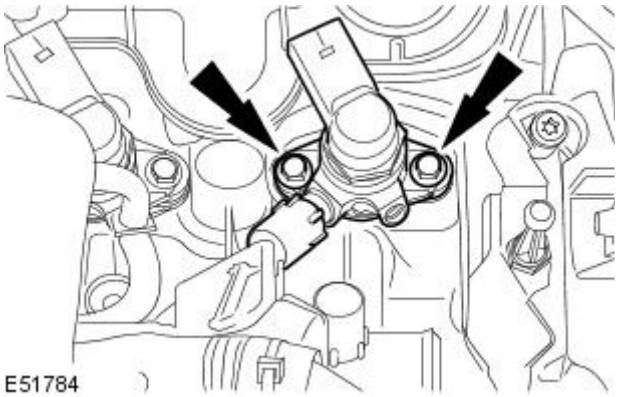


**14.** NOTE: Right-hand shown, left-hand similar.

Remove the fuel injector retaining bolts.

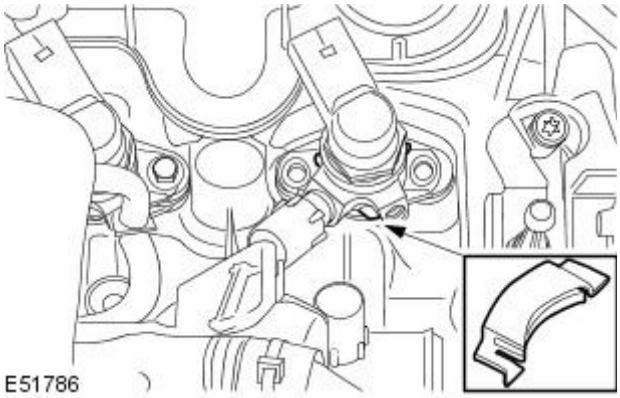


**15.** NOTE: Right-hand shown, left-hand similar.

Remove the fuel injector retaining clamp spacer.

GETtheMANUALS.org

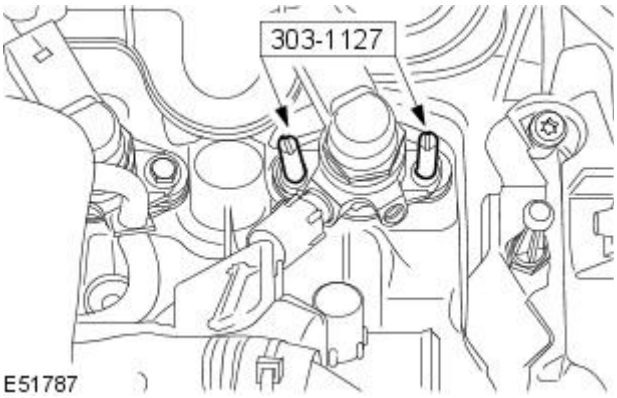


**16.** NOTE: Right-hand shown, left-hand similar.

Install the special tool studs.

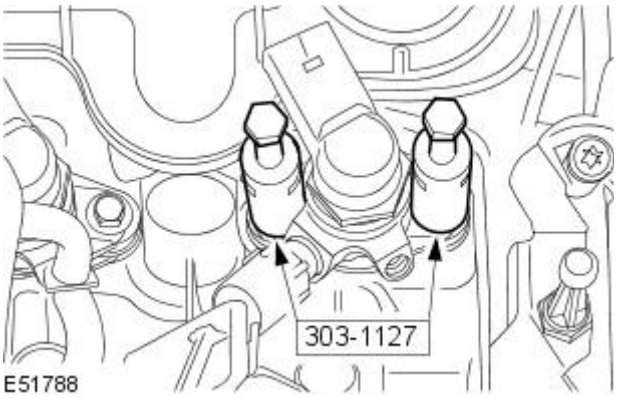


**17.** CAUTION: Make sure the fuel injector remover legs are correctly engaged to the fuel injector. Failure to follow this instruction may result in damage to the component.

• NOTE: Right-hand shown, left-hand similar.

Install the special tool puller legs to the studs.

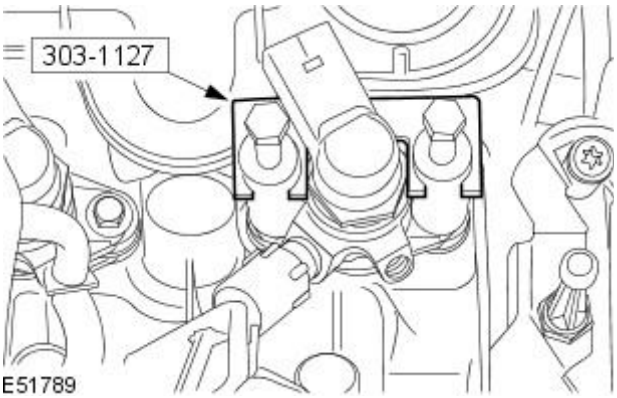


**18.** NOTE: Right-hand shown, left-hand similar.

Install the special tool locking plate to the puller legs.

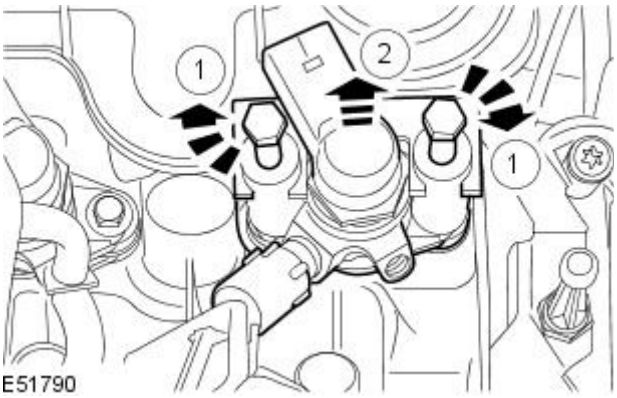


**19.** CAUTION: Make sure the special tool puller bolts are rotated evenly. Failure to follow this instruction may result in damage to the special tool or fuel injector.

• NOTE: Right-hand shown, left-hand similar.

Using the special tool, remove the fuel injector.

1. Rotate the bolts evenly, in a clockwise direction.
2. Remove the fuel injector.

- Remove the special tool.
- Remove and discard the fuel injector retaining clamp.
- Remove and discard the fuel injector sealing washer.

## Installation

• WARNINGS:

Do not smoke or carry lighted tobacco or open flame of any type when working on or near any fuel related components. Highly flammable mixtures are always present and may ignite. Failure to follow these instructions may result in personal injury.

This procedure involves fuel handling. Be prepared for fuel spillage at all times and always observe fuel handling precautions. Failure to follow these instructions may result in personal injury.

• CAUTIONS:

Make sure the workshop area in which the vehicle is being worked on is as clean and as dust free as possible. Foreign matter from work on clutches, brakes or from machining or welding operations can contaminate the fuel system and may result in later malfunction.

GETtheMANUALS.org

Always carry out the cleaning process before carrying out any repairs to the fuel injection system components. Failure to follow this instruction may result in foreign matter ingress to the fuel injection system.

Diesel fuel injection equipment is manufactured to very precise tolerances and fine clearances. It is therefore essential that absolute cleanliness is observed when working with these components. Always install blanking plugs to any open orifices or lines.

Do not disassemble the fuel injectors or clean the nozzles, even with an ultrasonic cleaner. Always install new fuel injectors when required.

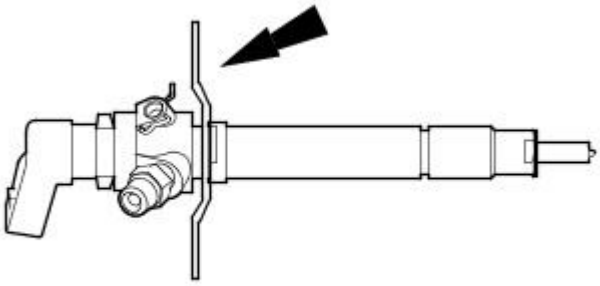

E52071

**1.** CAUTION: Do not use tools to install the new fuel return line retaining clip. Failure to follow this instruction will result in damage to the retaining clip.

- NOTE: Install a new fuel return line retaining clip.
- NOTE: Install a new high-pressure fuel supply line.
- NOTE: Install a new fuel injector sealing washer.
- NOTE: Note the orientation of the fuel injector retaining clamp.

Install a new fuel injector retaining clamp.

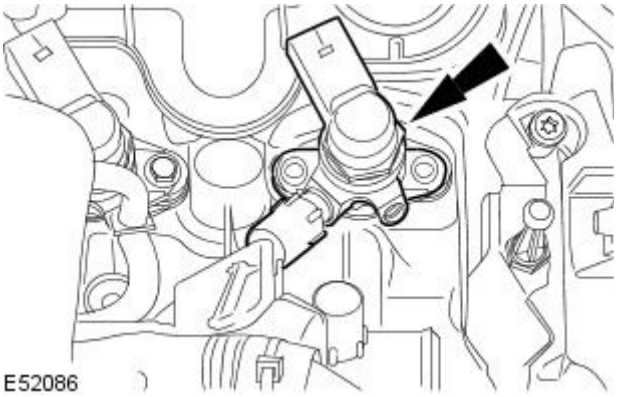

E52086

**2.** NOTE: Right-hand shown, left-hand similar.

Install the fuel injector.

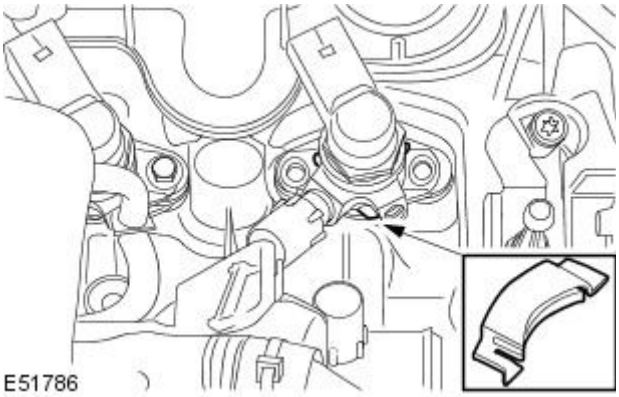

E51786

**3.** NOTE: Right-hand shown, left-hand similar.

Install the fuel injector retaining clamp spacer.

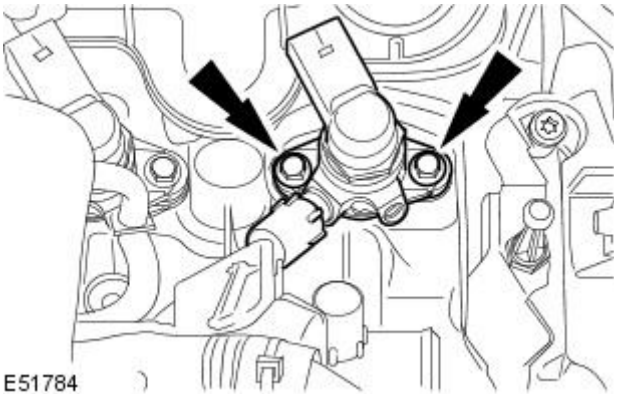

E51784

**4.** NOTE: Tighten the retaining bolts evenly to prevent the fuel injector retaining clamp tilting.

- NOTE: Right-hand shown, left-hand similar.

Tighten to 10 Nm.

GETtheMANUALS.org

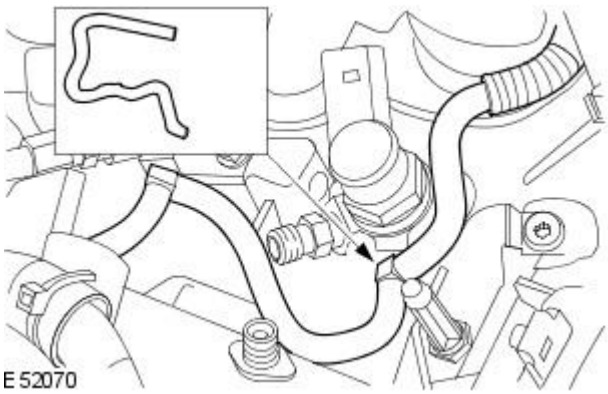


**5.** CAUTION: Make sure the fuel return line retaining clip is correctly installed to the fuel injector before installing the fuel return line.

• NOTE: Right-hand shown, left-hand similar.

Connect the fuel return line to the fuel injector.

- Visually inspect the fuel return line O-ring for damage.
- Apply a light coating of petroleum jelly to the fuel line return line O-ring.
- Connect the fuel return line to the fuel injector.

**6.** CAUTION: Do not allow the unions to hit the olive ends of the high-pressure fuel supply line as this may damage the ends of the line and allow foreign matter enter the fuel injection system.

Position the high-pressure fuel supply line as near to the final installation position as possible and then remove and discard the blanking plugs from the high-pressure fuel supply line.

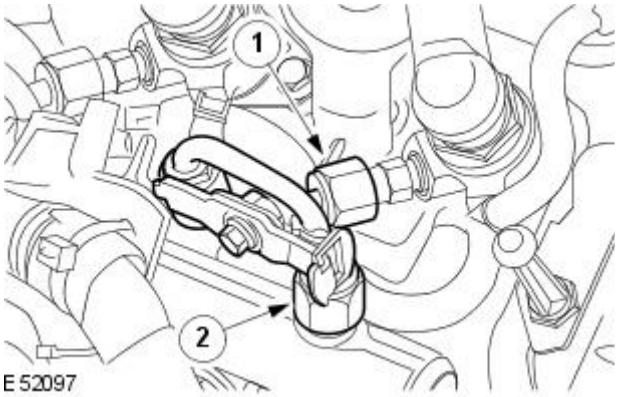


**7.** CAUTION: Maintain pressure on the high-pressure fuel supply line to keep the olives in contact with the fuel injectors and the fuel injection supply manifold cones while installing the unions.

• NOTE: Install the high-pressure fuel supply lines to the fuel injection supply manifold end first followed by the fuel injector end.

• NOTE: Right-hand shown, left-hand similar.

Install the new high-pressure fuel supply line.

- Tighten the high-pressure fuel supply line in the sequence shown in four stages:
  1. Stage 1: Tighten the high-pressure fuel supply line union 1 to 15 Nm.
  2. Stage 2: Tighten the high-pressure fuel supply line union 2 to 15 Nm.
  3. Stage 3: Tighten the high-pressure fuel supply line union 1 to 30 Nm.
  4. Stage 4: Tighten the high-pressure fuel supply line union 2 to 30 Nm.

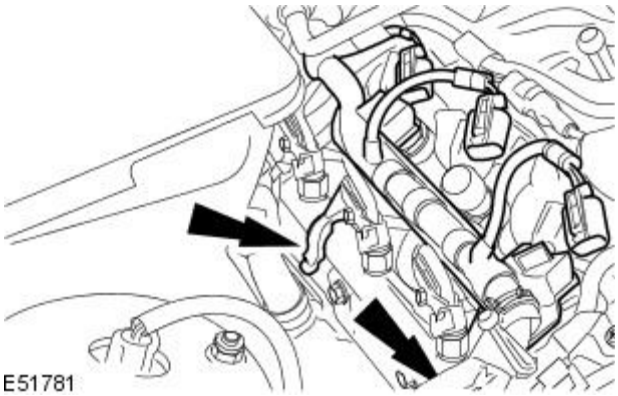


**8.** NOTE: Right-hand shown, left-hand similar.

Attach the fuel injection wiring harness.

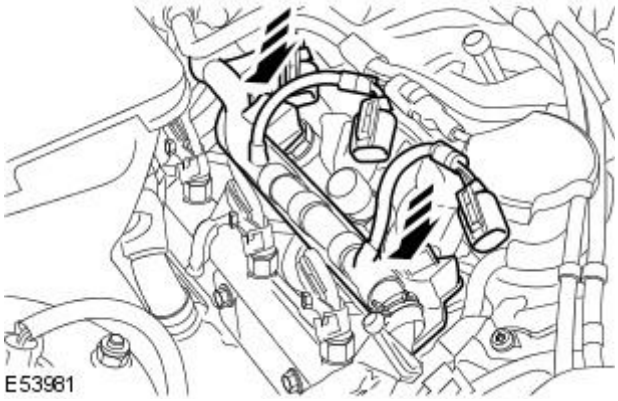


**9.** NOTE: Right-hand shown, left-hand similar.

Attach the fuel injection wiring harness.

GETtheMANUALS.org

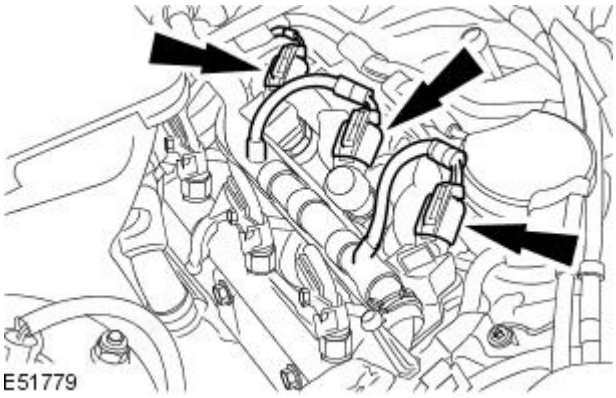


**10.** NOTE: Right-hand shown, left-hand similar.

Connect the fuel injector electrical connectors.

**11.** Install the injector sound proofing.

**12.** Install the exhaust gas recirculation (EGR) valve outlet tube.
For additional information, refer to: Exhaust Gas Recirculation (EGR) Valve Outlet Tube (303-08B Engine Emission Control - 2.7L V6 - TdV6, Removal and Installation).

**13.** Connect the battery ground cable.
For additional information, refer to: Battery Connect (414-01 Battery, Mounting and Cables, General Procedures).

**14.** WARNING: Do not carry out any repairs to the fuel system with the engine running. The fuel pressure within the high-pressure system can be as high as 1650 bar. Failure to follow this instruction may result in personal injury.

• NOTE: The fuel return line must be renewed if any leaks are found from the fuel return line O-rings.

Start the engine and check visually for fuel leaks.

GETtheMANUALS.org

# Fuel Charging and Controls - 2.7L V6 - TdV6 - Intake Air Shutoff Throttle

Removal and Installation

## Removal

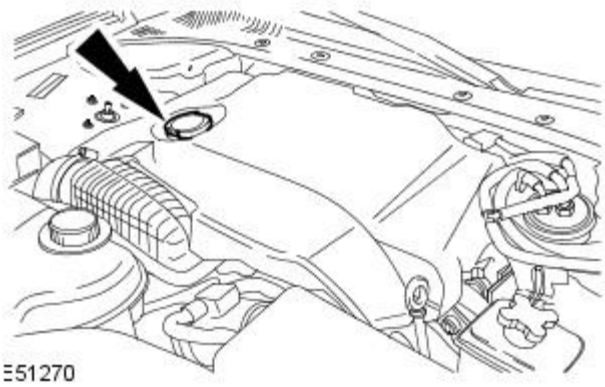


**1.** Remove the filler cap.

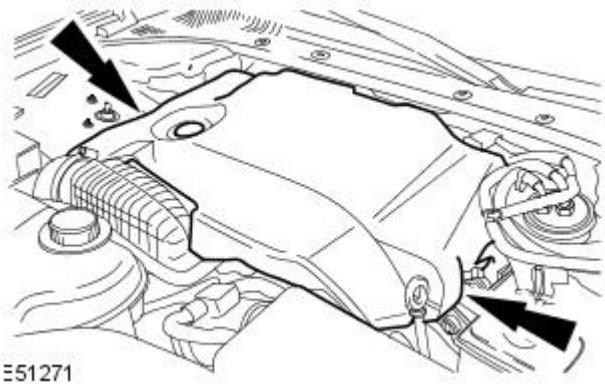


**2.** Remove the engine cover.

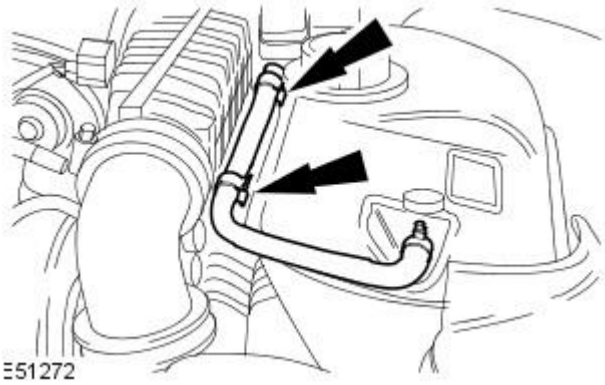


**3.** Detach the coolant hose.

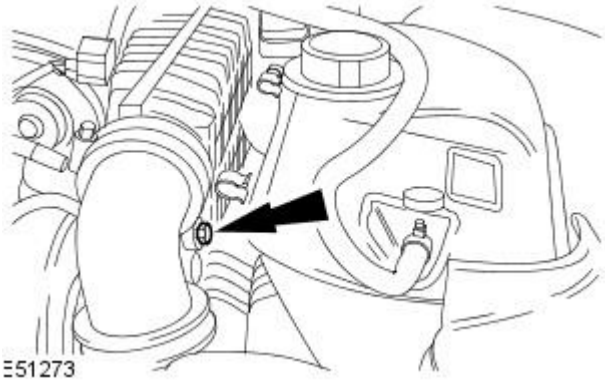


**4.** Remove the retaining bolt.

GETtheMANUALS.org

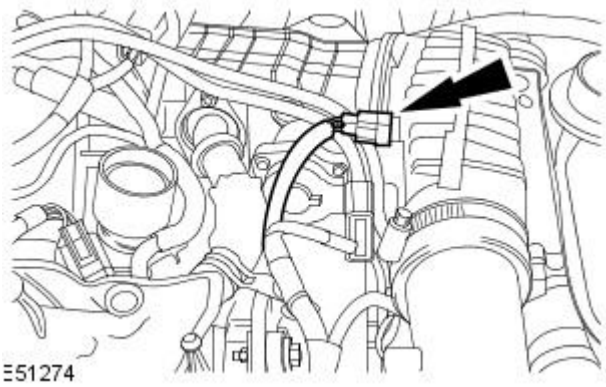


5. Disconnect the electrical connector.

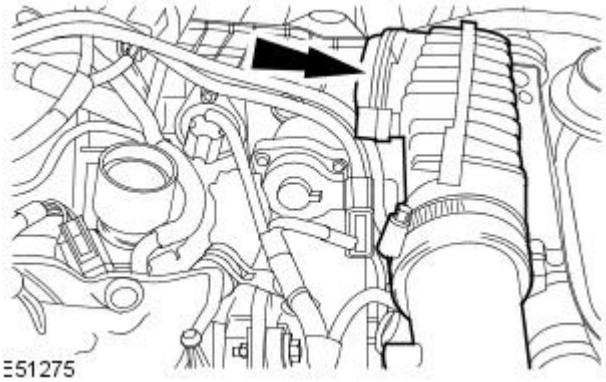


6. Detach the intake air shutoff throttle elbow.
   - Release the retaining clip.

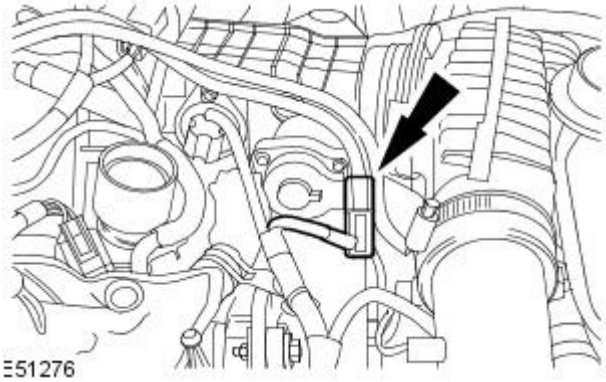


7. Disconnect the electrical connector.

8. Remove both exhaust gas recirculation (EGR) valve outlet tubes. For additional information, refer to: Exhaust Gas Recirculation (EGR) Valve Outlet Tube (303-08B Engine Emission Control - 2.7L V6 - TdV6, Removal and Installation).

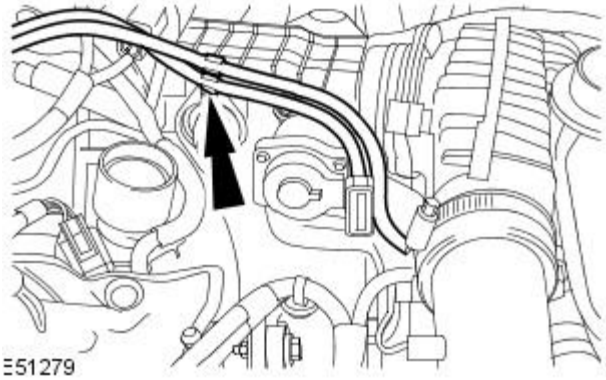


9. Detach the vacuum hose.

GETtheMANUALS.org

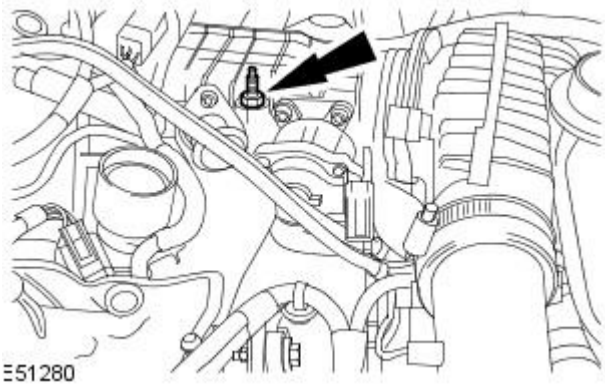


**10.** Remove the retaining bolt.

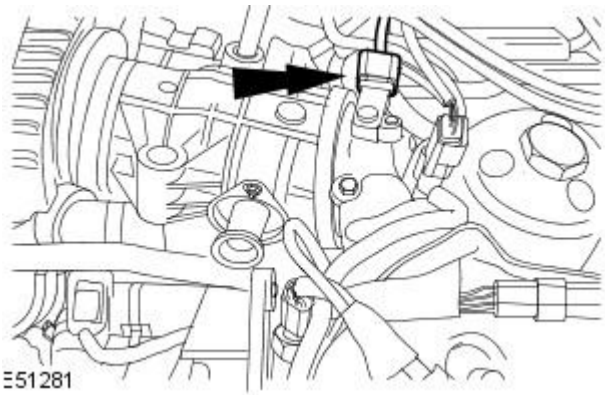


**11.** Disconnect the electrical connector.

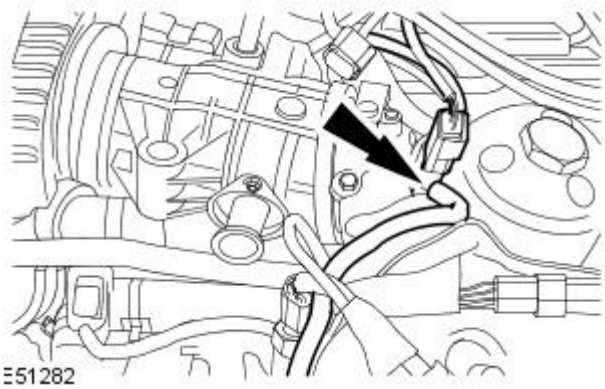


**12.** Detach the fuel return line valve from the intake air shutoff throttle.

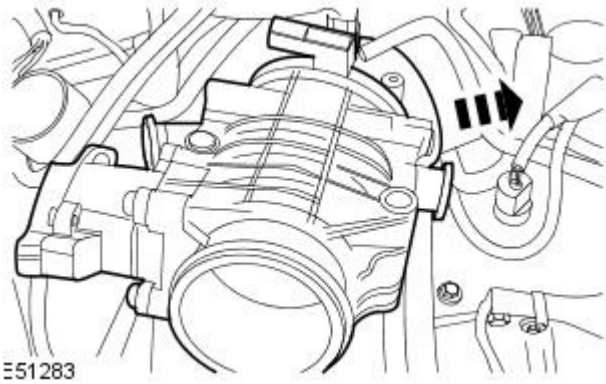


**13.** CAUTION: Make sure the fuel return line valve retaining clip is not damaged. Failure to follow this instruction may result in damage to the vehicle.

Reposition the intake air shutoff throttle.

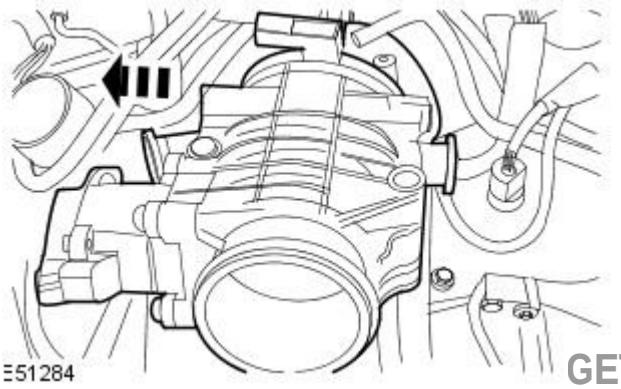


**14.** CAUTION: Make sure the fuel return line valve retaining clip is not damaged. Failure to follow this instruction may result in damage to the vehicle.

Remove the intake air shutoff throttle.

GETtheMANUALS.org

**15.** Remove and discard the intake air shutoff throttle seals.

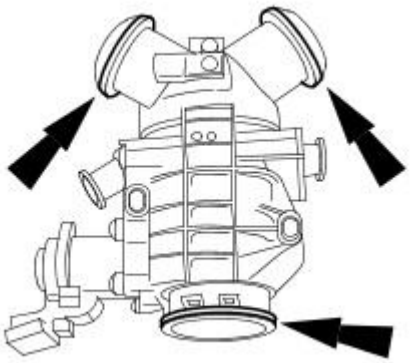

E51285

## Installation

**1.** To install, reverse the removal procedure.

- Tighten to 10 Nm.

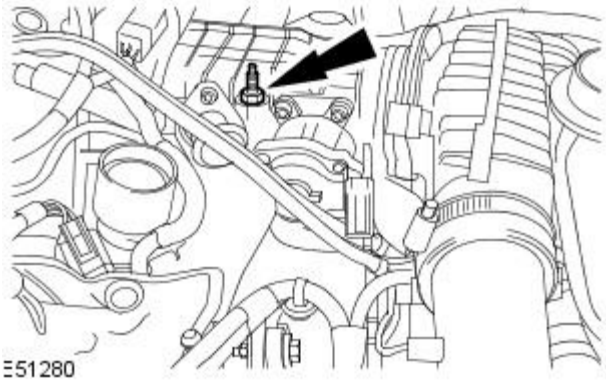

E51280

**2.** Tighten to 10 Nm.

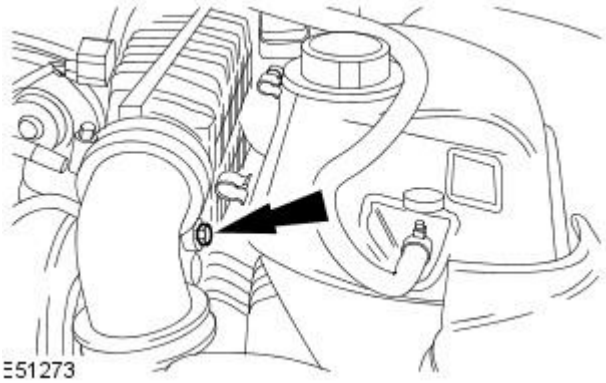

E51273

GETtheMANUALS.org

# Fuel Charging and Controls - 2.7L V6 - TdV6 - Swirl Plate Actuator Diaphragm

Removal and Installation

## Removal

• NOTE: Removal steps in this procedure may contain installation details.

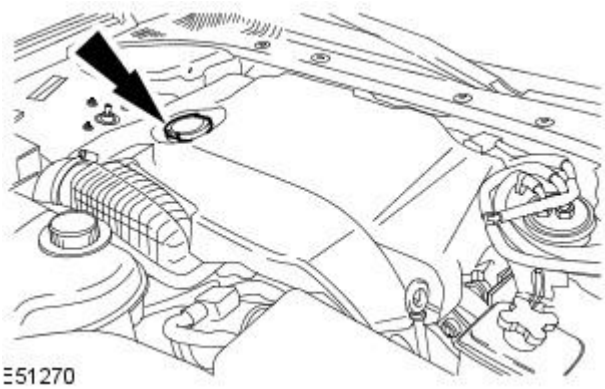


**1.** Remove the oil filler cap.

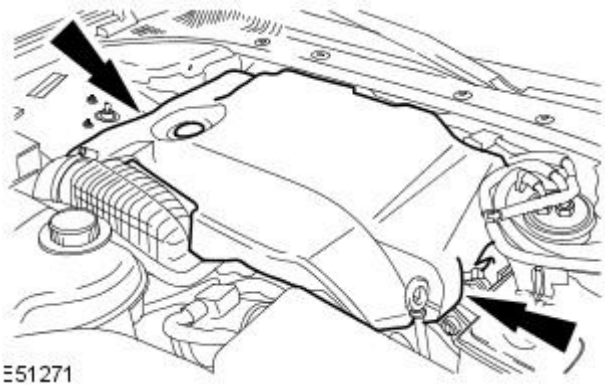


**2.** Remove the engine cover.

**3.** Remove the cowl vent screen.
For additional information, refer to: Cowl Panel Grille (501-02 Front End Body Panels, Removal and Installation).

**4.** Remove the engine compartment support.

- Remove the 4 bolts.
- Release the 3 scrivets.

**5.** Remove the engine compartment access panel.

- Remove the 2 scrivets.

**6.** Remove the wiring harness cover.

- Release the 7 clips.

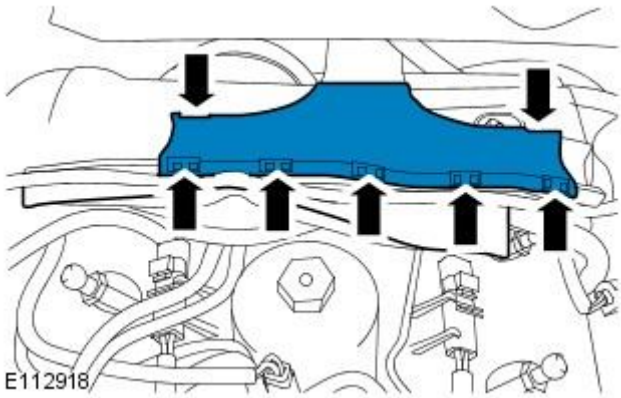


GETtheMANUALS.org

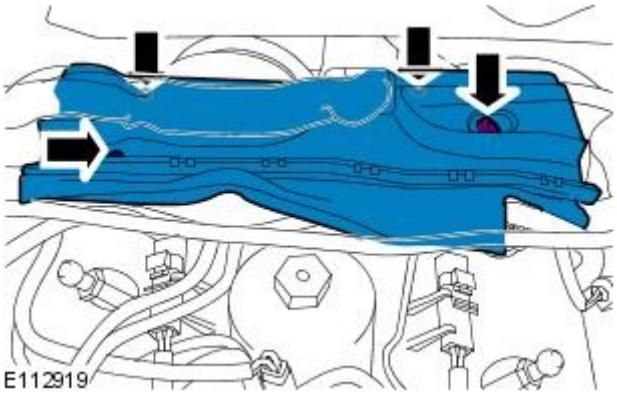


**7.** Remove the wiring harness carrier.

- Remove the 4 bolts.

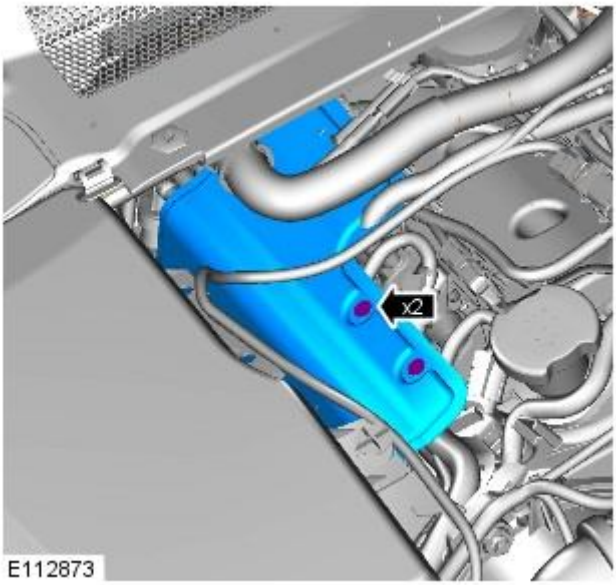


**8.** Remove the RH injector sound proofing.

- Release the 2 clips.

**9.** Check the port deactivation hoses are a secure fit onto the stub pipe and for signs of being trapped or chaffing.

- If the valve does not hold vacuum continue with the replacement of the diaphragm.
- If the valve holds vacuum check the valve on the other side of the engine.
- If one side is found not to hold vacuum then both diaphragms are to be changed.

**10.** Disconnect the port deactivation valve vacuum hoses.

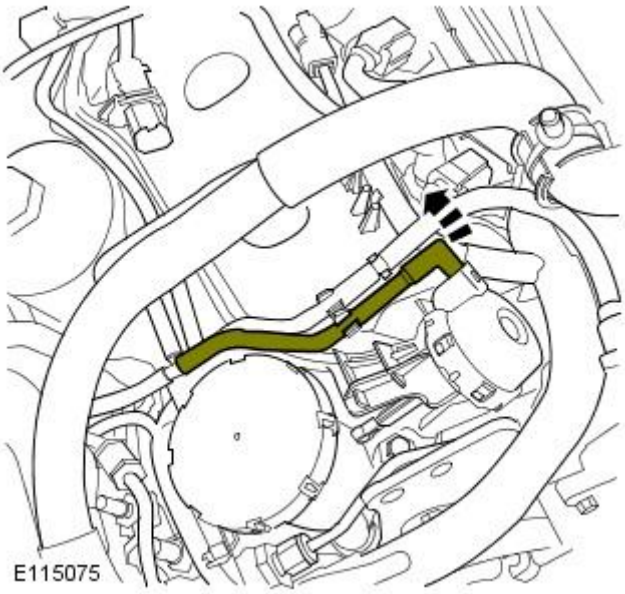


GETtheMANUALS.org

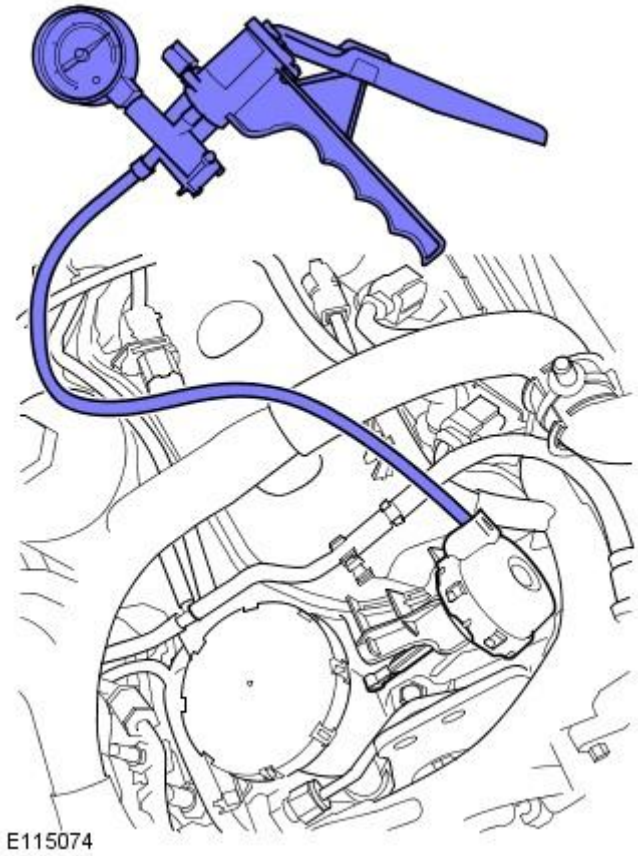


**11.** NOTE: Check the vacuum gauge and any hoses to be used for leaks prior to using on the vehicle.

• NOTE: Make sure the vacuum gauge hose is a secure fit to the port deactivation diaphragm caps.

Using a vacuum gauge, check the port deactivation valve diaphragms.

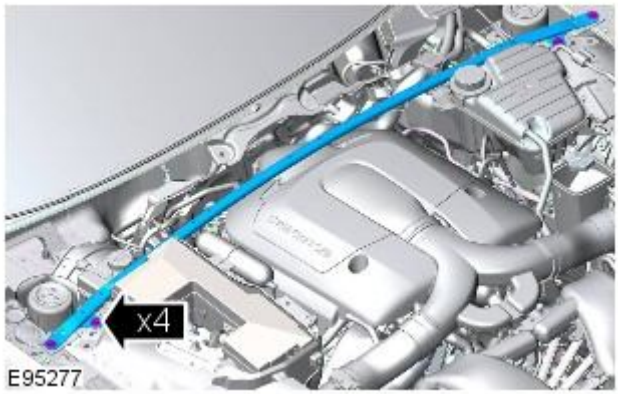


**12.** NOTE: Some variation in the illustrations may occur, but the essential information is always correct.

Remove the engine bay brace.

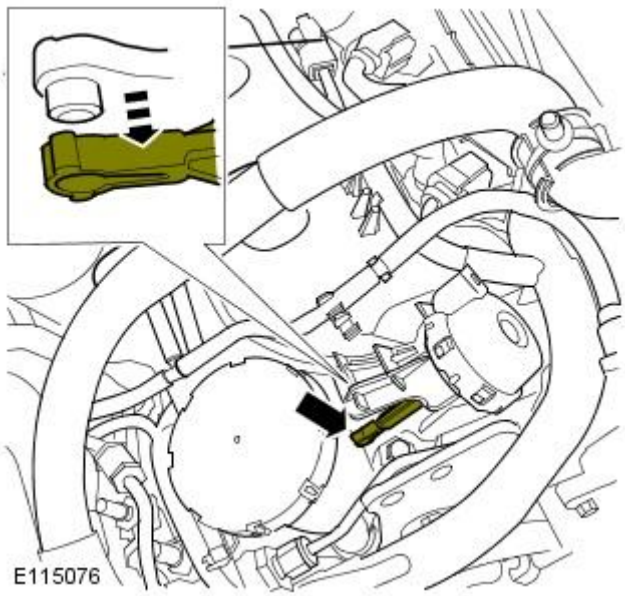


**13.** Release the port deactivation valve connecting rod.

GETtheMANUALS.org

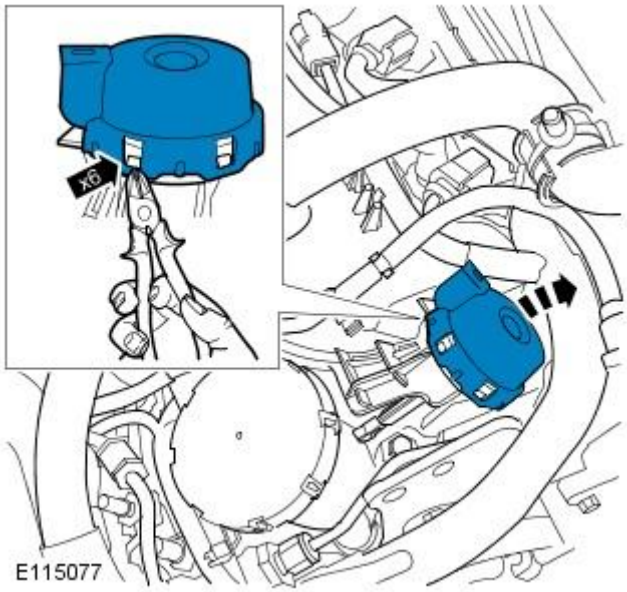


**14.** NOTE: Cut the retaining clips off the old port deactivation diaphragm caps to aid removal.

• NOTE: Make sure the valve cover is not damaged during removal of the port deactivation diaphragm cap.

Remove the port deactivation valve cap.

- Release the 6 clips.
- Check the diaphragm for splits or damage.

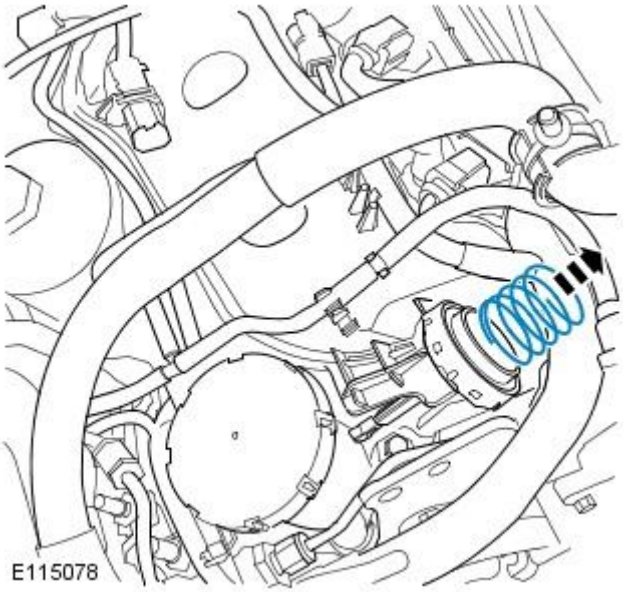


**15.** Remove the port deactivation valve spring.

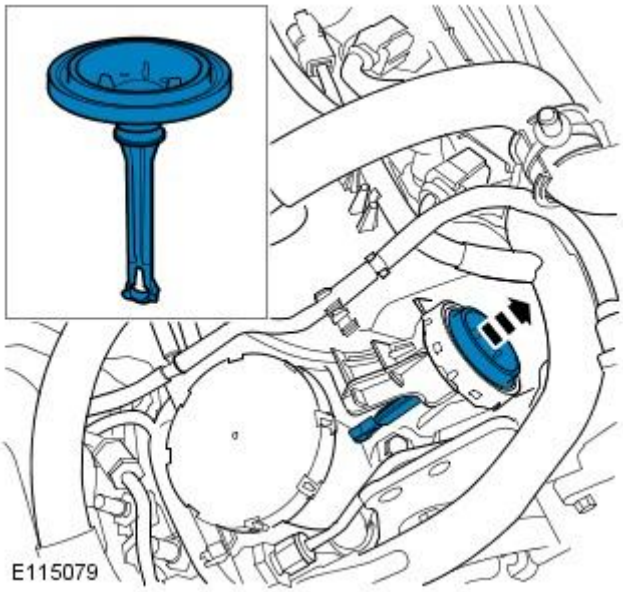


**16.** Remove the port deactivation valve connecting rod and diaphragm.

## Installation

GETtheMANUALS.org

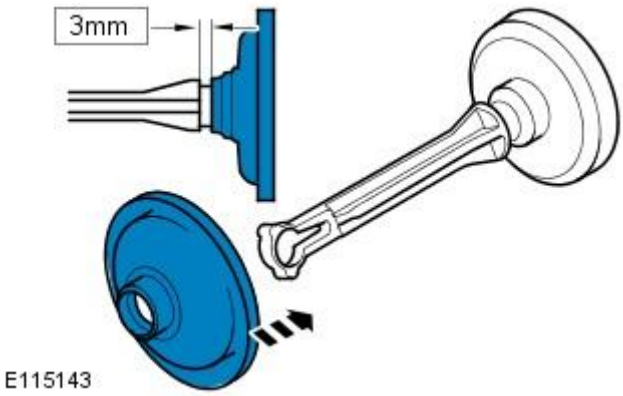


**1.** NOTE: Apply a small amount water to the diaphragm to aid installation.

• NOTE: Make sure the diaphragm is fully seated on the connecting rod.

Install the new port deactivation diaphragm to the new connecting rod.

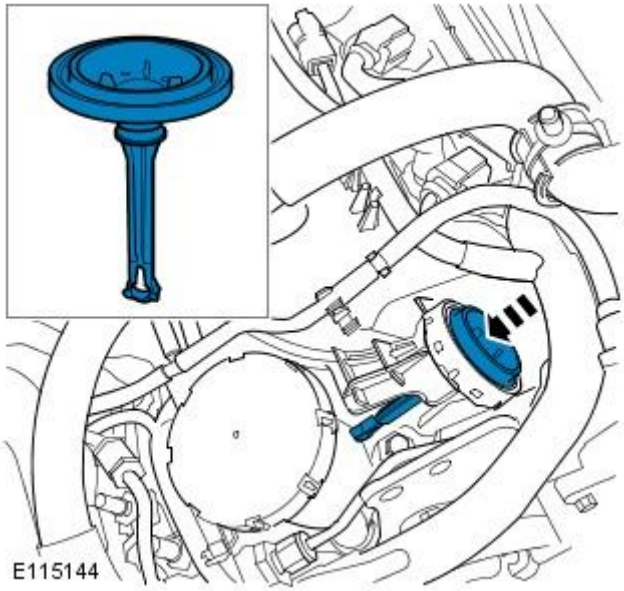


**2.** CAUTIONS:

Make sure that the mating faces are clean and free of foreign material.

Make sure the port deactivation rod is correctly aligned to the port deactivation valve arm.

• NOTE: Make sue the new port deactivation diaphragm and rod are installed in the correct orientation to the port deactivation linkage.

Install the port deactivation vale connecting rod and diaphram.

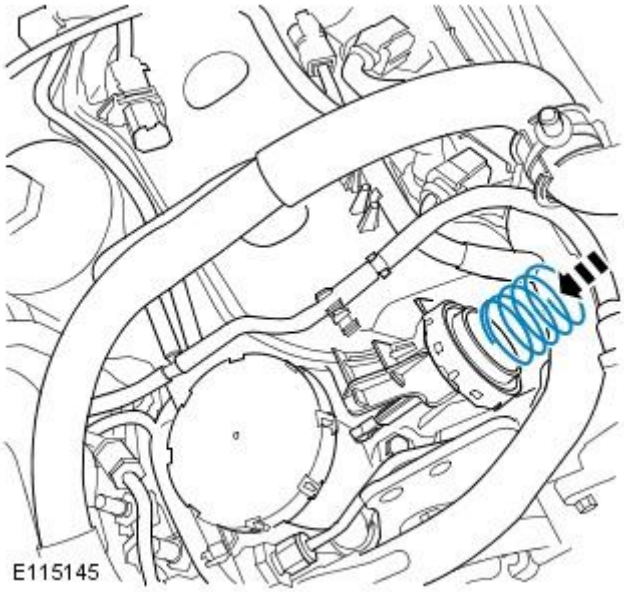


**3.** Install the port deactivation valve spring.

GETtheMANUALS.org

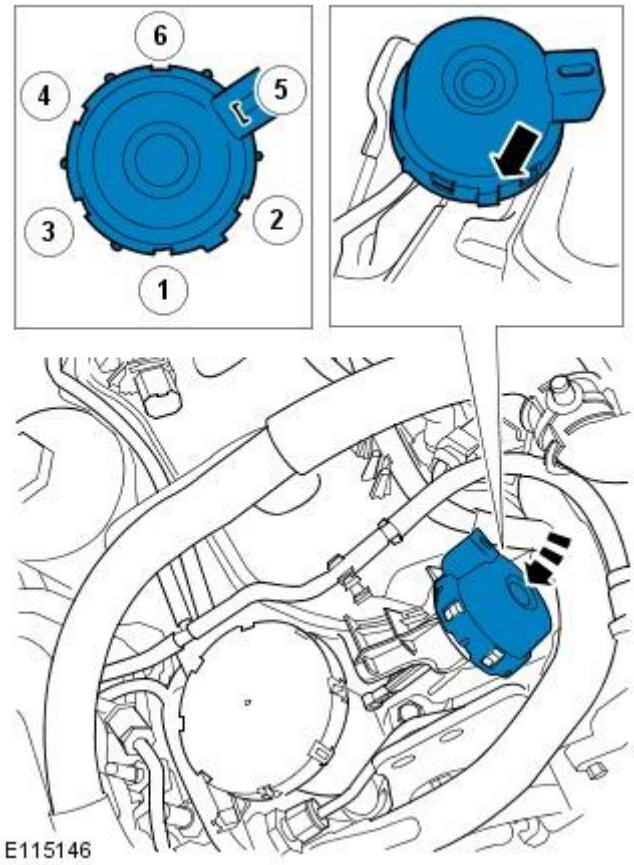


**4.** CAUTIONS:

Using a mirror check all clips are fully latched.

Make sure the port deactivation rod is not rotated once the cap has been installed, if rotation occurs the diaphragm will be damaged.

• NOTE: An audible click is heard when the clips are fully latched.

Install the port deactivation valve cap.

- Make sure the cap is correctly aligned within the timing marks.
- Secure the clips in the sequence shown.

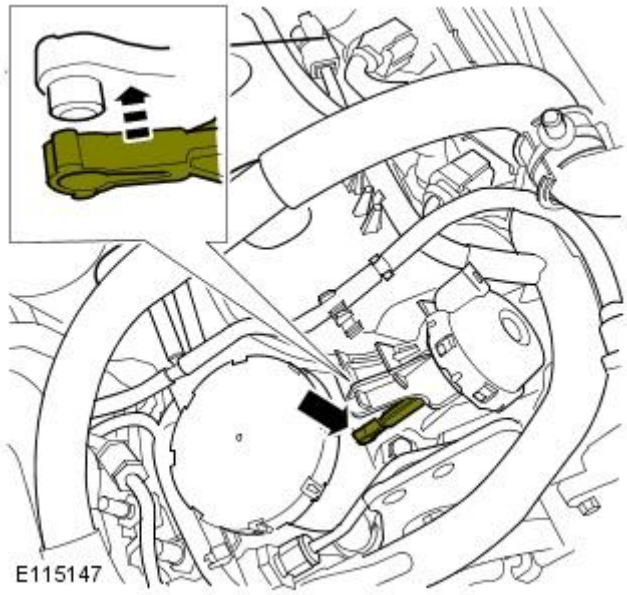


**5.** Attach the port deactivation valve connecting rod.

**6.** Repeat the above procedure on the opposite side.

GETtheMANUALS.org

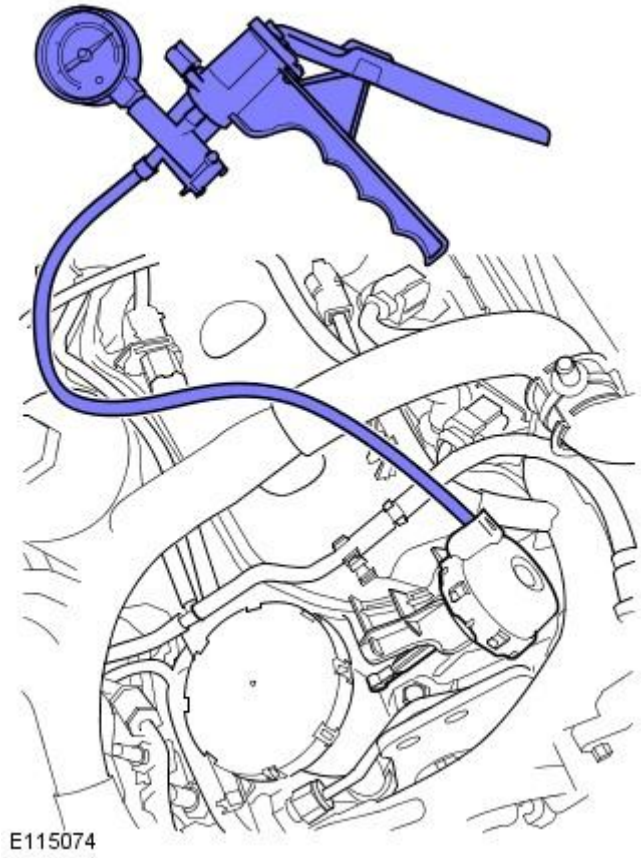


**7.** NOTE: Check the vacuum gauge and any hoses to be used for leaks prior to using on the vehicle.

Check the port deactivation valve diaphragms using a vacuum gauge.

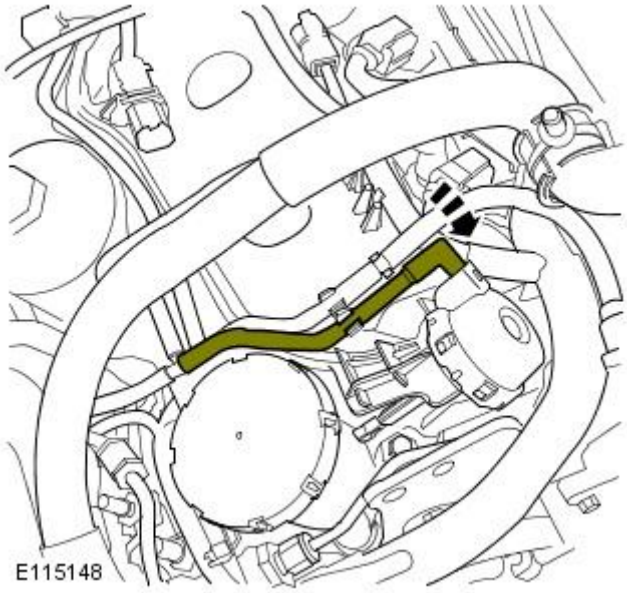


**8.** NOTE: When the LH hose is re-connected to the valve the right angle bend must be turned downwards, make sure the hose lies correctly in the gap between the engine cover support and the valve cover.

Connect the port deactivation valve vacuum hoses.

**9.** Position the port deactivation hose as shown in illustration.

GETtheMANUALS.org

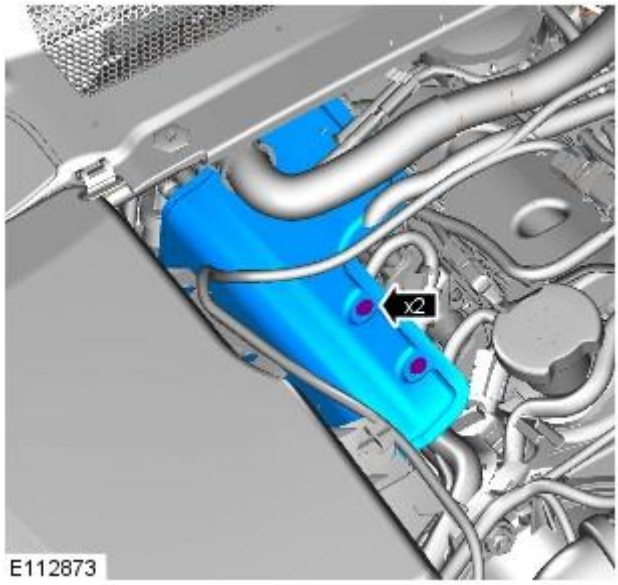


**10.** Install the RH injector sound proofing.

- Secure with the clips.

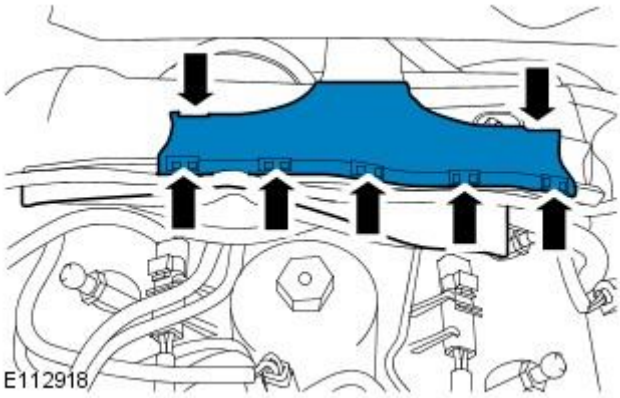


**11.** Install the wiring harness cover.

- Secure in the clips.

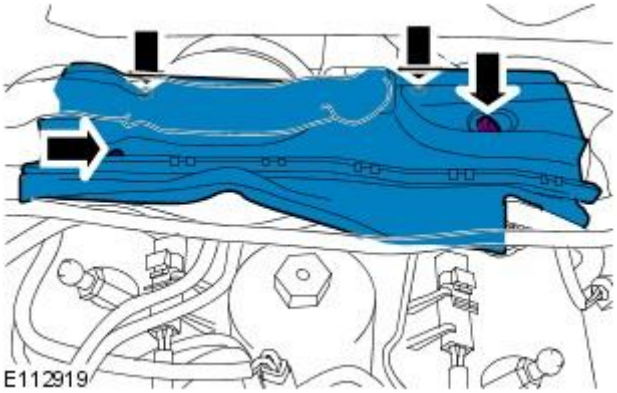


**12.** Install the wiring harness carrier.

- Install the bolts. TORQUE: 10 Nm

**13.** Install the engine compartment access panel.

- Secure with the scrivets.

**14.** Install the engine compartment support.

- Install the scrivets.
- Tighten the bolts to 25 Nm.

**15.** Install the cowl vent screen.
For additional information, refer to: Cowl Panel Grille (501-02 Front End Body Panels, Removal and Installation).

**16.** CAUTION: Correct installation of the oil filler cap can be obtained by tightening the cap until an audible click is heard.

Install the engine cover.

GETtheMANUALS.org

# Fuel Charging and Controls - Turbocharger - 2.7L V6 - TdV6 -

**Torque Specifications**

| Description | Nm | lb-ft | lb-in |
|---|---|---|---|
| Oil supply tube union to turbocharger retaining bolt | 30 | 22 | – |
| Oil supply tube to cylinder block retaining bolt | 10 | – | 89 |
| Oil return tube to turbocharger retaining bolts | 10 | – | 89 |
| Oil return tube to cylinder block retaining bolt | 10 | – | 89 |
| Exhaust gas recirculation (EGR) valve to cylinder head retaining bolts | 10 | – | 89 |
| EGR cooler mount bracket retaining bolt | 10 | – | 89 |
| EGR valve tube to exhaust manifold retaining bolts | 10 | – | 89 |
| Turbocharger to exhaust manifold retaining nuts | 23 | 17 | – |
| Turbocharger support bracket retaining bolts | 23 | 17 | – |
| Turbocharger heatshield retaining bolts | 10 | – | 89 |
| Exhaust manifold retaining nuts | 23 | 17 | – |
| Engine wiring harness retaining bolts | 4 | - | 35 |

GETtheMANUALS.org

# Fuel Charging and Controls - Turbocharger - 2.7L V6 - TdV6 - Turbocharger

Description and Operation

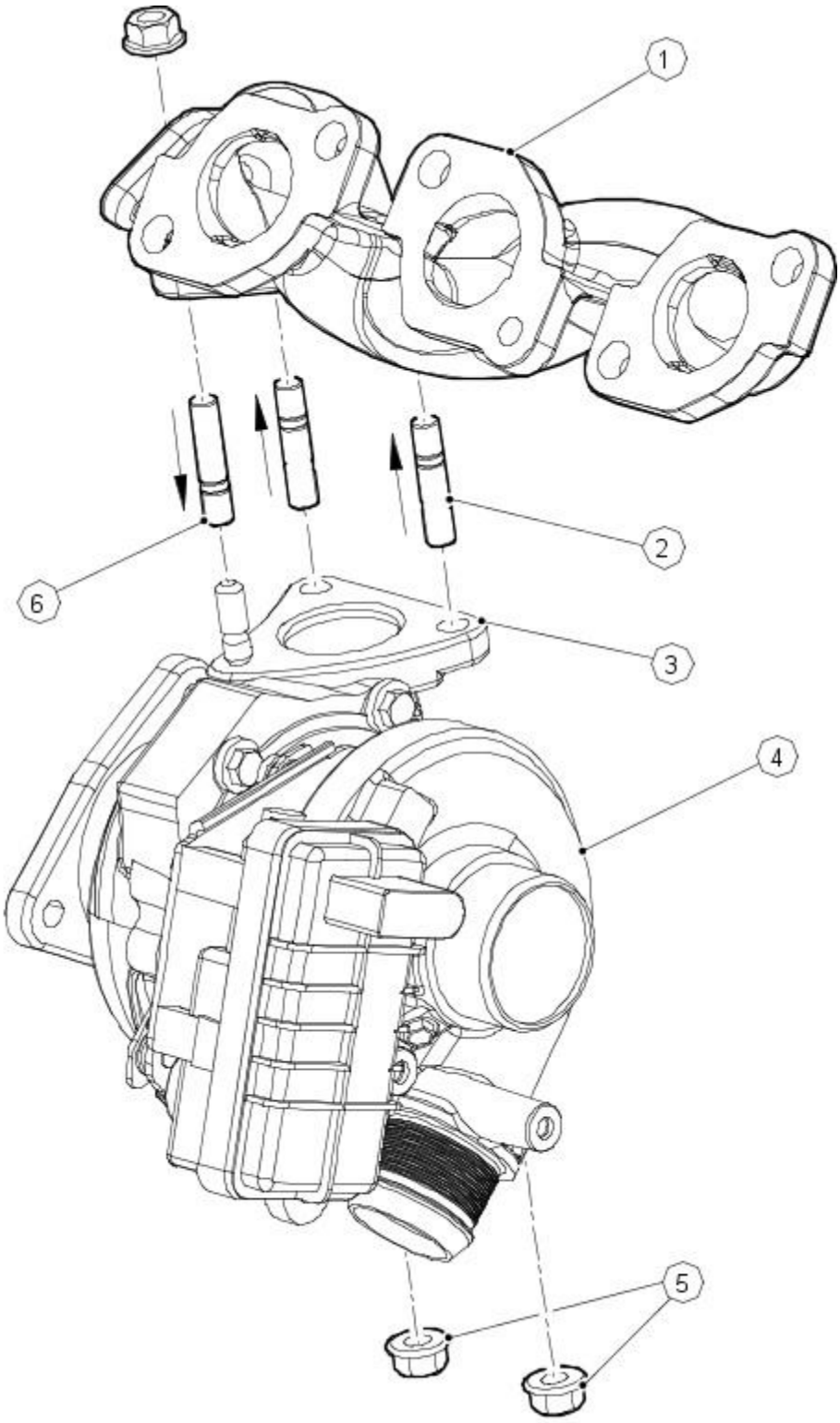


| Item | Part Number | Description |
|---|---|---|
| 1 | — | Exhaust manifold |
| 2 | — | Exhaust manifold studs |
| 3 | — | Turbocharger mounting flange |
| 4 | — | Turbocharger |
| 5 | - | Turbocharger retaining nuts |
| 6 | - | Exhaust manifold stud (note orientation of stud) |

## Variable Vane Turbocharger

The engine is fitted with twin variable vane Turbochargers, electronically controlled, one to each bank. The turbochargers are fixed to the exhaust manifold by a three hole flange. The turbocharger consists of two elements, a turbine and a compressor both installed on a single shaft.

The turbocharger bearings are supplied with oil from the engine.

The turbine uses the flow of the exhaust gas to drive the compressor. The compressor draws air through the air cleaner and forces it into the intake manifold.

Principles of Operation - Variable vane turbocharger

GETtheMANUALS.org

The turbocharger is designed to improve engine induction and engine performance. The list below details the concerns relating to

turbocharger performance.

- High engine speed produces excessive turbine speed and therefore creates excessive turbocharger boost pressure.
- Low engine speed does not produce sufficient turbine speed and therefore not enough turbocharger boost pressure is achieved.

The turbocharger does not have a wastegate control valve. Instead, it has variable turbocharger vanes which are located in the turbocharger turbine housing and these direct the air flow into the turbocharger turbine. The turbocharger vanes act as the control for the turbocharger boost pressure.

The turbocharger produces its full turbocharger boost pressure over the entire engine speed range, not just at high engine speed. This is achieved through the adjustment of the vanes and the resulting change in the flow of the exhaust gas.

The speed of the exhaust gas flow within the turbocharger is increased independent of engine speed by varying the intake cross section in front of the turbocharger turbine. This is achieved by adjusting the angle of the vanes controlling the air flow into the turbocharger turbine and this then drives the turbocharger turbine faster. The higher turbocharger speed produces a high turbocharger boost pressure at all engine speeds.

The engine control module (ECM) controls the turbocharger vanes by means of an electronic vane adjustment solenoid attached to the turbocharger.

Regulation at Low Engine Speed

At low engine speeds the ECM operates the vane adjustment solenoid. The vane adjustment solenoid moves the adjusting ring so that the vanes are set at a shallow angle. The shallow intake cross section this creates for the stream of exhaust gas allows the turbocharger boost pressure to build up rapidly and easily at low engine speeds.

Regulation at Moderate Engine Speed

As the engine speed increases and the quantity of exhaust gas increases, the vane adjustment solenoid moves the adjusting ring so that the vanes are set at a steeper angle. The steeper angle opens the intake cross section effectively reducing the gas flow, and turbine speed, while maintaining constant turbocharger boost pressure.

Regulation at Maximum Engine Speed

As the engine speed increases the intake cross section in front of the turbocharger turbine is continuously enlarged. The turbine speed and hence the quantity of the air supplied to the engine, is adjusted to suit the engine speed. This means that the turbocharger boost pressure remains optimized over all engine speeds.

The maximum position of the turbocharger vanes (maximum opening cross section) is also an emergency position, in the event of an electrical concern. This lowers the chance of engine damage due to excessive boost in the event of a turbocharger control concern.

GETtheMANUALS.org

# Fuel Charging and Controls - Turbocharger - 2.7L V6 - TdV6 - Turbocharger

Diagnosis and Testing

## Principle of operation

The turbochargers used on the 2.7L diesel engine are **variable geometry** units, which means that the amount of boost generated can be varied according to the engine load, not just the engine speed.

The vane angles are varied by solenoids mounted on the turbochargers.

The solenoid operation is governed by the engine control module in response to engine load and conditions, ensuring the correct boost pressure for the prevailing conditions.

## Inspection and Verification

• WARNINGS:

The following tests may involve working in close proximity to hot components. Make sure adequate protection is used. Failure to follow this instruction may result in personal injury.

The turbochargers can continue to rotate after the engine has stopped. Do not attempt to check the turbochargers until one minute has elapsed since the engine was switched off. Failure to follow this instruction may result in personal injury.

CAUTION: When probing connectors to take measurements in the course of the pinpoint tests, use the adaptor kit, part number 3548-1358-00. Failure to follow this instruction may result in damage to the vehicle.

• NOTE: When performing voltage or resistance tests, always use a digital multimeter (DMM) accurate to 3 decimal places, and with an up-to-date calibration certificate. When testing resistance, always take the resistance of the DMM leads into account.

• NOTE: Check and rectify basic faults before beginning diagnostic routines involving pinpoint tests.

• NOTE: If diagnostic trouble codes (DTCs) are recorded and the symptom is not present when performing the pinpoint tests, an intermittent concern may be the cause. Always check for loose connections and corroded terminals.

• NOTE: This section contains references to Parameter Identifiers (PIDs). Where the Jaguar approved diagnostic system is not available, a scantool may be used to access these PIDs, all of which give information, and some of which can be used to both read information and to activate components. The format of the information may vary, depending on the tool used.

1. **1.** Verify the customer concern.
2. **2.** Visually inspect for obvious signs of mechanical or electrical damage.

| Visual inspection |
|---|
| • Restrictions/Leakage in the air intake.<br>REFER to: Intake Air Distribution and Filtering (303-12C Intake Air Distribution and Filtering - 2.7L V6 - TdV6, Diagnosis and Testing).<br>• Loose hoses and/or clips<br>• Electrical connections and harnesses to the solenoids<br>• Solenoid(s) failure<br>• General engine condition.<br>REFER to: Engine - 2.7L V6 - TdV6 (303-00 Engine System - General Information, Diagnosis and Testing). |

## Symptom chart

| Symptom | Possible source | Action |
|---|---|---|
| Poor performance | • Low/Contaminated fuel<br>• Restricted air intake<br>• General engine condition<br>• Engine management fault | Check the fuel level and condition,<br>REFER to: Fuel Charging and Controls (303-04C Fuel Charging and Controls - 2.7L V6 - TdV6, Diagnosis and Testing).<br>Check the air intake for restriction,<br>REFER to: Intake Air Distribution and Filtering (303-12C Intake Air Distribution and Filtering - 2.7L V6 - TdV6, Diagnosis and Testing).<br>Check the engine condition, compressions, etc,<br>REFER to: Engine - 2.7L V6 - TdV6 (303-00 Engine System - General Information, Diagnosis and Testing).<br>Check for DTCs. |
| No boost | • Electrical connections and harnesses to the solenoid(s)<br>• Engine air intake restricted/leaking<br>• Charge air cooler restricted/leaking<br>• Turbocharger actuator failure(s)<br>• Turbocharger failure(s) | Check the electrical connections and harnesses to the solenoid(s). Check the air intake for restriction/leakage (see visual inspection). For air intake checks,<br>REFER to: Intake Air Distribution and Filtering (303-12C Intake Air Distribution and Filtering - 2.7L V6 - TdV6, Diagnosis and Testing).<br>For turbocharger actuator tests, GO to Pinpoint Test B. and GO to Pinpoint Test C. For turbocharger mechanical checks, GO to Pinpoint Test A. |
| No boost/excessive noise | • Turbocharger failure | For turbocharger mechanical checks, GO to Pinpoint Test A. |

## DTC index

• NOTE: For a full list of DTCs,
REFER to: Electronic Engine Controls (303-14C Electronic Engine Controls - 2.7L V6 - TdV6, Diagnosis and Testing).

| DTC | Condition | Possible source | Action |
|---|---|---|---|
| P0045 | Turbocharger boost control solenoid circuit | • Turbocharger boost control solenoid circuit A, open circuit | For turbocharger boost control solenoid circuit tests, GO to Pinpoint Test B. |

GETTheMANUALS.org

| DTC | Condition | Possible source | Action |
|---|---|---|---|
| P0046 | Turbocharger boost control solenoid circuit | • Turbocharger boost control solenoid circuit A: range/performance | For turbocharger boost control solenoid circuit tests, GO to Pinpoint Test B. |
| P0047 | Turbocharger boost control solenoid circuit | • Turbocharger boost control solenoid circuit A: short circuit to ground | For turbocharger boost control solenoid circuit tests, GO to Pinpoint Test B. |
| P0048 | Turbocharger boost control solenoid circuit | • Turbocharger boost control solenoid circuit A: short circuit to battery | For turbocharger boost control solenoid circuit tests, GO to Pinpoint Test B. |
| P0234 | Turbocharger overboost condition | • Turbocharger boost control solenoid circuit B fault | For turbocharger boost control solenoid circuit tests, GO to Pinpoint Test C. |
| P0263 | Turbocharger boost system performance | • Turbocharger boost control solenoid circuit B fault | For turbocharger boost control solenoid circuit tests, GO to Pinpoint Test C. |
| P0299 | Turbocharger underboost condition | • Turbocharger boost control solenoid circuit B fault | For turbocharger boost control solenoid circuit tests, GO to Pinpoint Test C. |

## Pinpoint Tests

**PINPOINT TEST A : CHECK THE TURBOCHARGER MECHANICAL CONDITION**

• CAUTIONS:

Do not insert any tools into the turbocharger body. Failure to follow this instruction may result in damage to the vehicle.

When probing connectors to take measurements in the course of the pinpoint tests, use the adaptor kit, part number 3548-1358-00. Failure to follow this instruction may result in damage to the vehicle.

• NOTE: A small amount of oil inside the turbocharger body, visible when the hoses are disconnected, is normal.

• NOTE: A small amount of play in the turbine shaft is normal. If in any doubt, compare with a known good unit.

• NOTE: When performing electrical voltage or resistance tests, always use a digital multimeter (DMM) accurate to 3 decimal places, and with an up-to-date calibration certificate. When testing resistance, always take the resistance of the DMM leads into account.

• NOTE: Check and rectify basic faults before beginning diagnostic routines involving pinpoint tests.

| TEST CONDITIONS | DETAILS/RESULTS/ACTIONS |
|---|---|
| **A1: CHECK FOR EXCESSIVE PLAY IN THE TURBOCHARGER SHAFT** | |
| | 1 Disconnect the intake and outlet hoses from the turbocharger.<br>REFER to: Turbocharger LH (303-04D Fuel Charging and Controls - Turbocharger - 2.7L V6 - TdV6, Removal and Installation) /<br>Turbocharger RH (303-04D Fuel Charging and Controls - Turbocharger - 2.7L V6 - TdV6, Removal and Installation). |
| | 2 Check that the turbocharger rotates freely, and without noise. |
| | 3 Grip the ends of the turbine shaft at either side of the turbocharger and assess the play. |
| | Is the play in the shaft excessive? (Compare the play to a known good unit in the event of uncertainty).<br>**Yes**<br>INSTALL a new turbocharger.<br>REFER to: Turbocharger LH (303-04D Fuel Charging and Controls - Turbocharger - 2.7L V6 - TdV6, Removal and Installation) /<br>Turbocharger RH (303-04D Fuel Charging and Controls - Turbocharger - 2.7L V6 - TdV6, Removal and Installation).<br>CLEAR any DTCs, test the vehicle for normal operation.<br>**No**<br>CHECK for other sources of noise. RECHECK the turbocharger system for the cause of the lack of boost. |

## Inspection and Verification

**This pinpoint test is intended to diagnose the following:**

- Short circuit to GROUND in the variable geometry turbo actuator A (VGTA1) circuit.
- Short circuit to POWER in the VGTA1 circuit.
- Open circuit in the VGTA1 circuit.
- VGTA1 fault
- ECM fault

**VGTA1 connector**

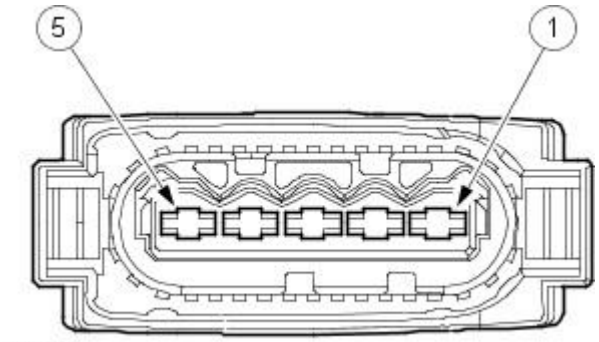


E54256

| | |
|---|---|
| Variable geometry turbo actuator 1 - signal | 04 |
| Variable geometry turbo actuator 1 - power | 01 |
| Variable geometry turbo actuator 1 - ground | 02 |

**Engine control module (ECM) connector**

GETtheMANUALS.org

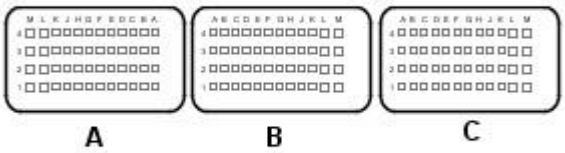


E54251

| | |
|---|---|
| Variable geometry turbo actuator 1 - signal | B-H3 |

## Pinpoint Tests

| PINPOINT TEST B : CHECK THE TURBOCHARGER ACTUATOR CIRCUIT A | |
|---|---|
| **TEST CONDITIONS** | **DETAILS/RESULTS/ACTIONS** |
| **B1: CHECK THE VGTA1 GROUND CIRCUIT FOR CONTINUITY** | |
| | 1 Key off. |
| | 2 VGTA1 connector disconnected. |
| | 3 Key on, engine off. |
| | 4 Measure the resistance between: |
| | Variable geometry turbo actuator 1 - ground - Pin 02 / Negative post |
| | Is the resistance less than 10 ohms?<br>**Yes**<br>GO to B2.<br>**No**<br>REPAIR the open circuit. For additional information, refer to the wiring diagrams. |
| **B2: CHECK THE POWER SUPPLY TO THE VGTA1** | |
| | 1 Measure the voltage between: |
| | Variable geometry turbo actuator 1 - power - Pin 01 / Negative post |
| | Is the voltage between 9 volts - 15 volts?<br>**Yes**<br>GO to B3.<br>**No**<br>No supply to the VGTA1 circuit. Check and repair the circuit as necessary. |
| **B3: CHECK THE VGTA1 SIGNAL CIRCUIT FOR SHORT CIRCUIT TO GROUND** | |
| | 1 Measure the resistance between: |
| | Variable geometry turbo actuator 1 - signal - Pin 04 / Negative post |
| | Is the resistance greater than 100 Kohms?<br>**Yes**<br>GO to B4.<br>**No**<br>GO to B6. |
| **B4: CHECK THE VGTA1 SIGNAL CIRCUIT FOR SHORT CIRCUIT TO POWER** | |
| | 1 Measure the resistance between: |
| | Variable geometry turbo actuator 1 - signal - Pin 04 / Positive post |
| | Is the resistance greater than 100 Kohms?<br>**Yes**<br>GO to B5.<br>**No**<br>GO to B7. |
| **B5: CHECK THE VGTA1 SIGNAL CIRCUIT FOR OPEN CIRCUIT** | |
| | 1 Key off. |
| | 2 ECM connector disconnected. |
| | 3 Measure the resistance between: |
| | Variable geometry turbo actuator 1 - signal - Pin 04 / Variable geometry turbo actuator 1 - signal - Pin B-H3 |
| | Is the resistance less than 10 ohms?<br>**Yes**<br>An intermittent fault may be present in the wiring harness. Visually check for chaffed wires or other physical damage to the harness. If no fault is found in the circuit, suspect the following component(s):- VGTA1 connector- ECM connector- VGTA1- ECM<br>**No**<br>REPAIR the open circuit. For additional information, refer to the wiring diagrams. |
| **B6: CHECK WHETHER THE SHORT CIRCUIT TO GROUND IS IN THE VGTA1 HARNESS OR ECU** | |
| | 1 Key off. |
| | 2 ECM connector disconnected. |
| | 3 Key on, engine off. |
| | 4 Measure the resistance between: |
| | Variable geometry turbo actuator 1 - signal - Pin 04 / Negative post |
| | Is the resistance greater than 100 Kohms?<br>**Yes**<br>Harness is OK.Suspect:- ECM<br>**No**<br>REPAIR the short circuit. For additional information, refer to the wiring diagrams. |
| **B7: CHECK WHETHER THE SHORT CIRCUIT TO POWER IS IN THE VGTA1 HARNESS OR ECU** | |
| | 1 Key off. |
| | 2 ECM connector disconnected. |
| | 3 Key on, engine off. |

GETtheMANUALS.org

| | | |
|---|---|---|
| | 4 Measure the resistance between: | |
| | Variable geometry turbo actuator 1 - signal - Pin 04 | Positive post |
| | Is the resistance greater than 100 Kohms?<br>**Yes**<br>Harness is OK.Suspect:- ECM<br>**No**<br>REPAIR the short circuit. For additional information, refer to the wiring diagrams. | |

## Inspection and Verification

**This pinpoint test is intended to diagnose the following:**

- Short circuit to GROUND in the variable geometry turbo actuator B (VGTA2) circuit
- Short circuit to POWER in the VGTA2 circuit
- Open circuit in the VGTA2 circuit
- VGTA2 fault
- ECM fault

**VGTA2 connector**

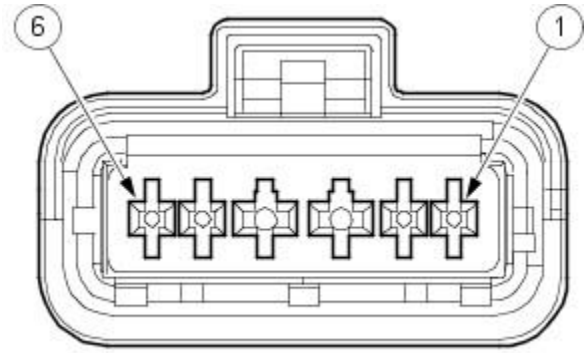


E54258

| | |
|---|---|
| Variable geometry turbo actuator 2 - signal | 04 |
| Variable geometry turbo actuator 2 - power | 01 |
| Variable geometry turbo actuator 2 - ground | 02 |

**Engine control module (ECM) connector**

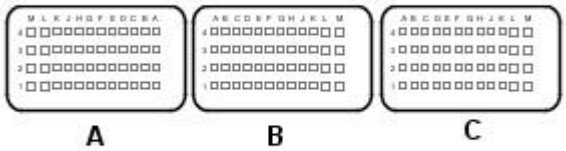


E54251

| | |
|---|---|
| Variable geometry turbo actuator 2 - signal | B-H4 |

## Pinpoint Tests

| PINPOINT TEST C : CHECK THE TURBOCHARGER ACTUATOR AND CIRCUIT B | | |
|---|---|---|
| **TEST CONDITIONS** | **DETAILS/RESULTS/ACTIONS** | |
| **C1: CHECK THE VGTA2 GROUND CIRCUIT FOR CONTINUITY** | | |
| | 1 Key off. | |
| | 2 VGTA2 connector disconnected. | |
| | 3 Key on, engine off. | |
| | 4 Measure the resistance between: | |
| | Variable geometry turbo actuator 2 - ground - Pin 02 | Negative post |
| | Is the resistance less than 10 ohms?<br>**Yes**<br>GO to C2.<br>**No**<br>REPAIR the open circuit. For additional information, refer to the wiring diagrams. | |
| **C2: CHECK THE POWER SUPPLY TO THE VGTA2** | | |
| | 1 Measure the voltage between: | |
| | Variable geometry turbo actuator 2 - power - Pin 01 | Negative post |
| | Is the voltage between 9 volts - 15 volts?<br>**Yes**<br>GO to C3.<br>**No**<br>No supply to VGTA2 circuit. Check and repair the circuit as necessary. | |
| **C3: CHECK THE VGTA2 SIGNAL CIRCUIT FOR SHORT CIRCUIT TO GROUND** | | |
| | 1 Measure the resistance between: | |
| | Variable geometry turbo actuator 2 - signal - Pin 04 | Negative post |

GETtheMANUALS.org

| | |
|---|---|
| | Is the resistance greater than 100 Kohms?<br>**Yes**<br>GO to C4.<br>**No**<br>GO to C6. |
| **C4: CHECK THE VGTA2 SIGNAL CIRCUIT FOR SHORT CIRCUIT TO POWER** | |
| | 1 Measure the resistance between:<br>Variable geometry turbo actuator 2 - signal - Pin 04 \| Positive post |
| | Is the resistance greater than 100 Kohms?<br>**Yes**<br>GO to C5.<br>**No**<br>GO to C7. |
| **C5: CHECK THE VGTA2 SIGNAL CIRCUIT FOR OPEN CIRCUIT** | |
| | 1 Key off.<br>2 ECM connector disconnected.<br>3 Measure the resistance between:<br>Variable geometry turbo actuator 2 - signal - Pin 04 \| Variable geometry turbo actuator 2 - signal - Pin B-H4 |
| | Is the resistance less than 10 ohms?<br>**Yes**<br>An intermittent fault may be present in the wiring harness. Visually check for chaffed wires or other physical damage to the harness. If no fault is found in the circuit, suspect the following component(s):- VGTA2 connector- ECM connector- VGTA2- ECM<br>**No**<br>REPAIR the open circuit. For additional information, refer to the wiring diagrams. |
| **C6: CHECK WHETHER THE SHORT CIRCUIT TO GROUND IS IN THE VGTA2 HARNESS OR ECU** | |
| | 1 Key off.<br>2 ECM connector disconnected.<br>3 Key on, engine off.<br>4 Measure the resistance between:<br>Variable geometry turbo actuator 2 - signal - Pin 04 \| Negative post |
| | Is the resistance greater than 100 Kohms?<br>**Yes**<br>Harness is OK.Suspect:- ECM<br>**No**<br>REPAIR the short circuit. For additional information, refer to the wiring diagrams. |
| **C7: CHECK WHETHER THE SHORT CIRCUIT TO POWER IS IN THE VGTA2 HARNESS OR ECU** | |
| | 1 Key off.<br>2 ECM connector disconnected.<br>3 Key on, engine off.<br>4 Measure the resistance between:<br>Variable geometry turbo actuator 2 - signal - Pin 04 \| Positive post |
| | Is the resistance greater than 100 Kohms?<br>**Yes**<br>Harness is OK.Suspect:- ECM<br>**No**<br>REPAIR the short circuit. For additional information, refer to the wiring diagrams. |

GETtheMANUALS.org

# Fuel Charging and Controls - Turbocharger - 2.7L V6 - TdV6 - Turbocharger LH

Removal and Installation

## Removal

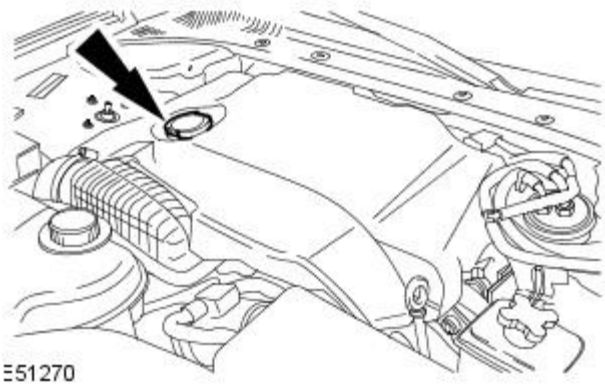


1. Remove the oil filler cap.

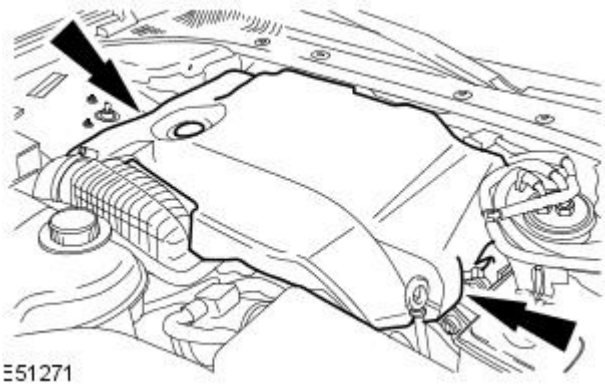


2. Remove the engine cover.

3. Remove the fuel injector soundproofing.
4. Remove the cowl panel grille.
   For additional information, refer to: Cowl Panel Grille (501-02 Front End Body Panels, Removal and Installation).
5. Remove the air cleaner.
   For additional information, refer to: Air Cleaner (303-12C Intake Air Distribution and Filtering - 2.7L V6 - TdV6, Removal and Installation).
6. Remove the power steering reservoir.
   For additional information, refer to: Power Steering Fluid Reservoir (211-02 Power Steering, Removal and Installation).
7. Remove the air deflector.
   For additional information, refer to: Air Deflector (501-02 Front End Body Panels, Removal and Installation).
8. Drain the cooling system.
   For additional information, refer to: Cooling System Draining, Filling and Bleeding (303-03C Engine Cooling - 2.7L V6 - TdV6, General Procedures).
9. Remove the left-hand engine compartment cover.

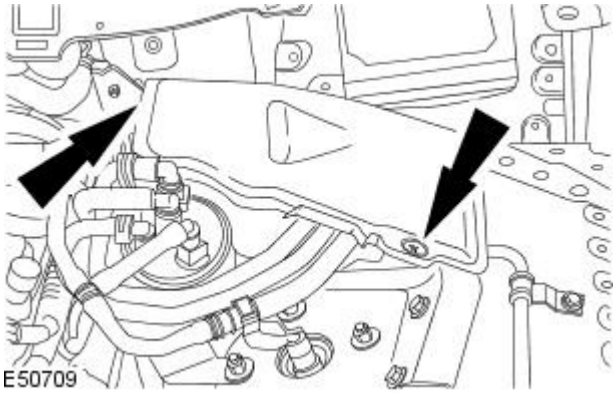


GETtheMANUALS.org

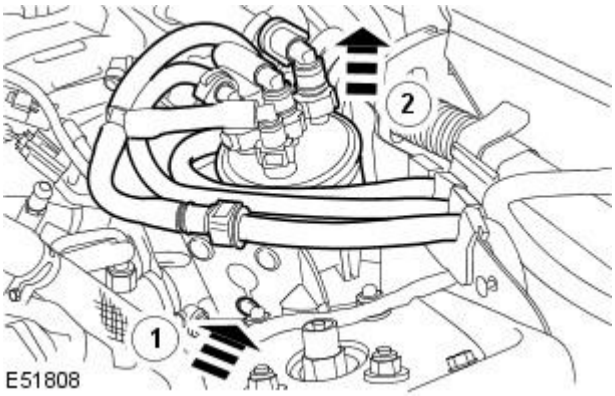


**10.** Detach the fuel filter from the mounting bracket.

1. Press the retaining tang.
2. Detach the fuel filter from the mounting bracket.

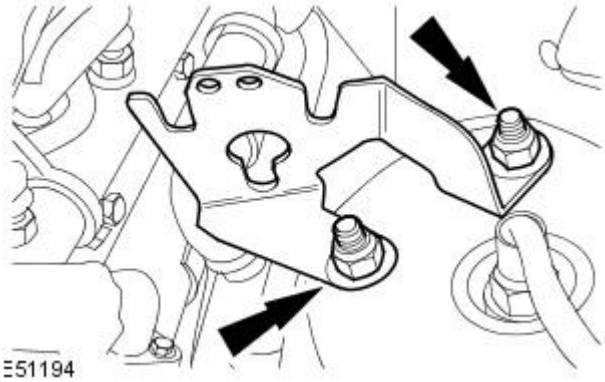


**11.** Remove the fuel filter mounting bracket.

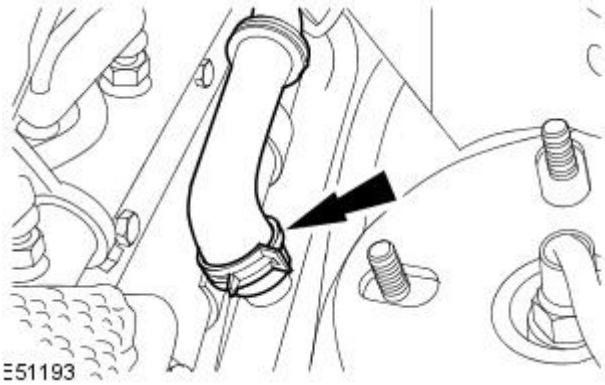


**12.** Disconnect the exhaust gas recirculation (EGR) coolant inlet hose.

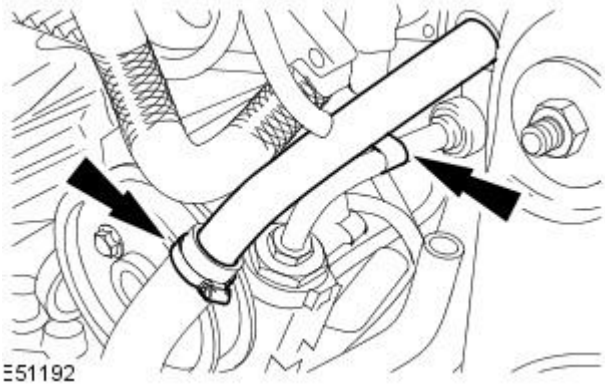


**13.** Detach the EGR cooler inlet tube.

- Disconnect the inlet hose.
- Detach the EGR cooler inlet tube retaining clip.

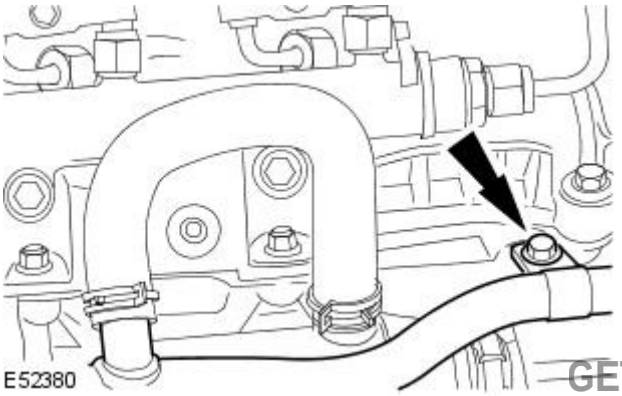


**14.** Detach the EGR cooler inlet tube from the EGR mounting bracket.

GETtheMANUALS.org

**15.** Remove the left-hand catalytic converter.
For additional information, refer to: Catalytic Converter - 2.7L V6 - TdV6 (309-00 Exhaust System, Removal and Installation).

**16.** Remove the EGR coolant inlet tube.

1. Remove the retaining nut.
2. Disconnect the coolant hose.

- Remove the EGR coolant inlet tube.

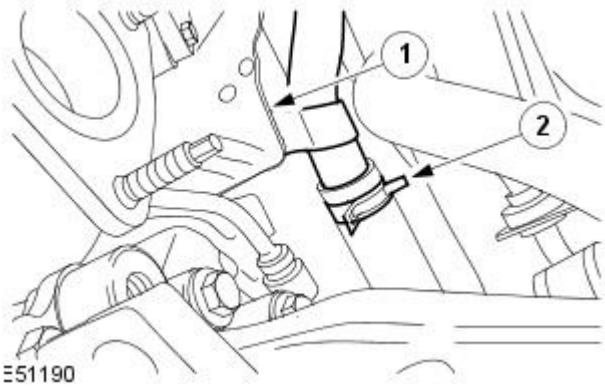


**17.** Remove the turbocharger heatshield.

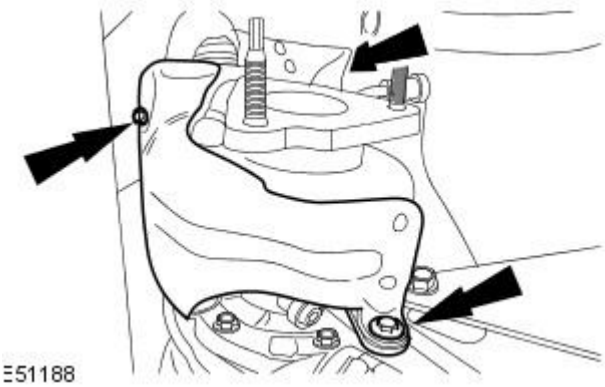


**18.** Remove the turbocharger support bracket.

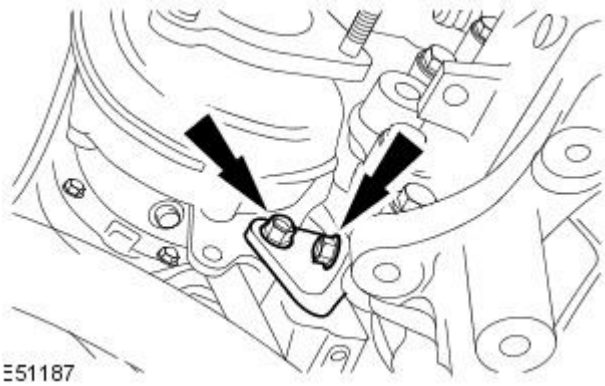


**19.** Disconnect the turbocharger outlet hose from the turbocharger.

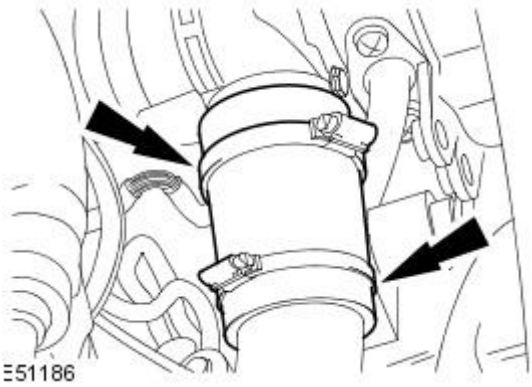


GETtheMANUALS.org

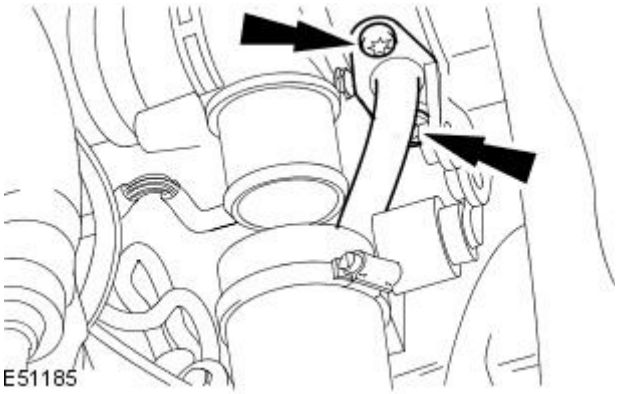


**20.** Disconnect the oil return tube from the turbocharger.

- Remove and discard the gasket.

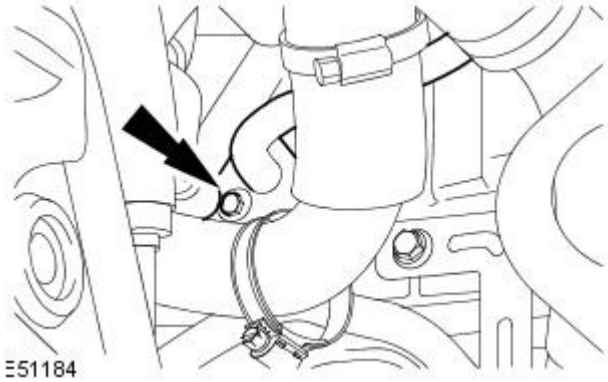


**21.** Remove the oil return tube.

1. Remove and discard the O-ring seal.

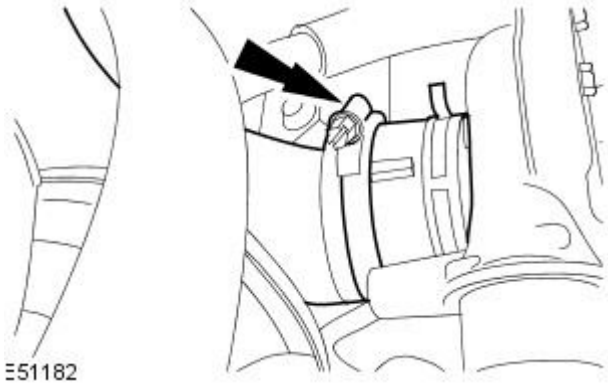


**22.** Detach the air cleaner lower outlet tube.

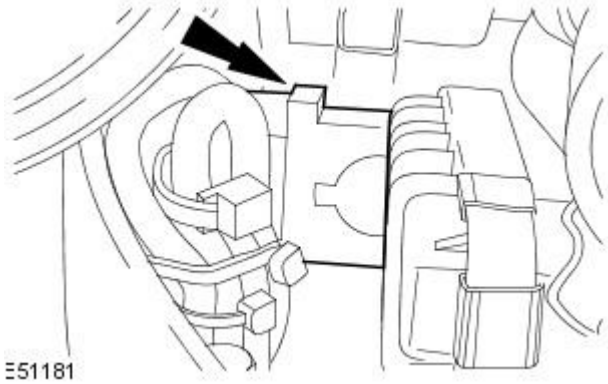


**23.** Disconnect the turbocharger solenoid electrical connector.

**24.** Lower the vehicle.

**25.** Disconnect the turbocharger oil supply tube.

- Remove and discard the sealing washers.

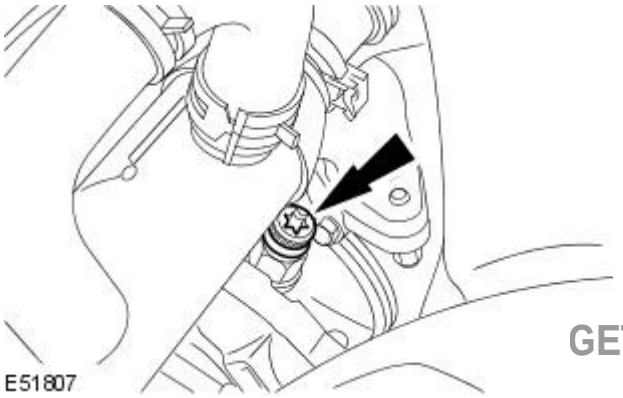


GETtheMANUALS.org

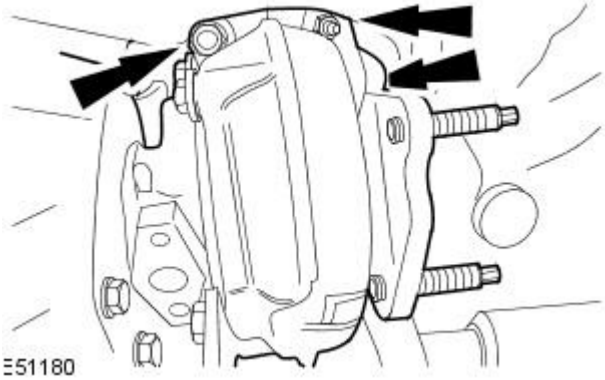


**26.** Raise the vehicle.

**27.** Remove the turbocharger.

- Discard the turbocharger retaining nuts.
- Remove and discard the turbocharger to exhaust manifold retaining studs.

## Installation

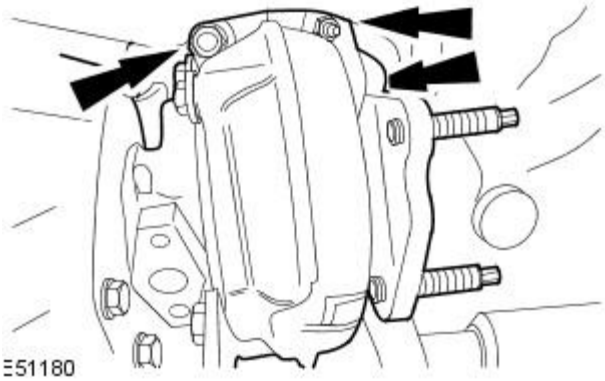


**1.** Install the turbocharger.

- Install new turbocharger to exhaust manifold retaining studs.
- Install new turbocharger retaining nuts.
- Tighten to 23 Nm.

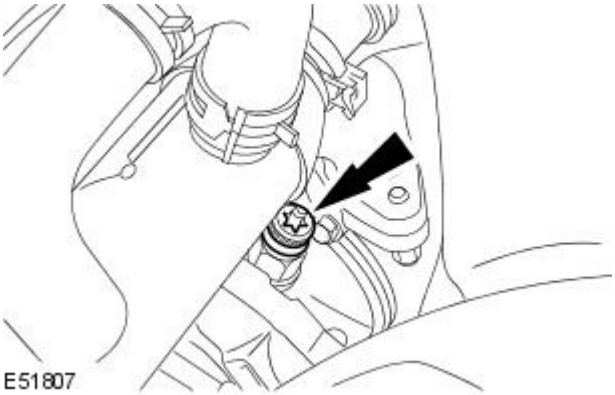


**2.** Lower the vehicle.

**3.** Connect the turbocharger oil supply tube.

- Install new sealing washers.
- Tighten to 30 Nm.

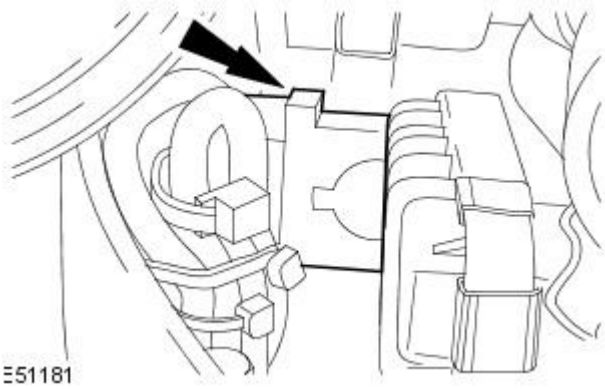


**4.** Raise the vehicle.

**5.** Connect the turbocharger solenoid electrical connector.

GETtheMANUALS.org

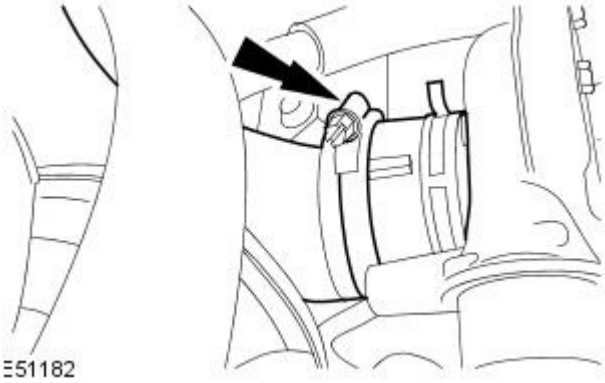


**6.** Attach the air cleaner lower outlet tube.

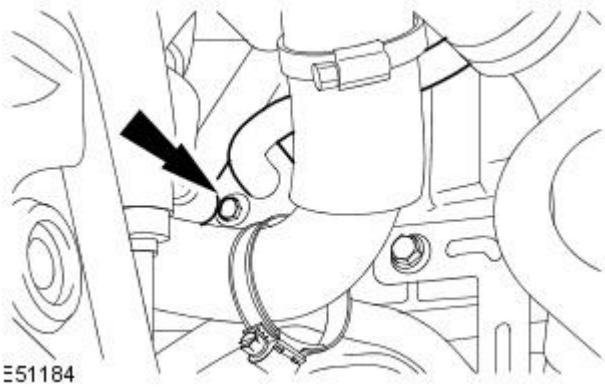


**7.** Install the oil return tube.

- Install a new O-ring seal.
- Tighten to 10 Nm.

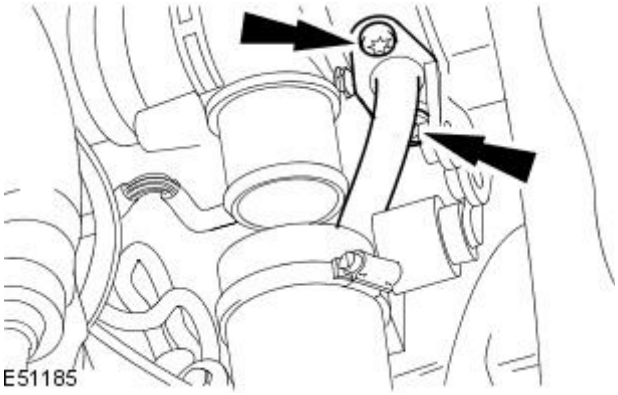


**8.** Connect the oil return tube to the turbocharger.

- Install a new gasket.
- Tighten to 10 Nm.

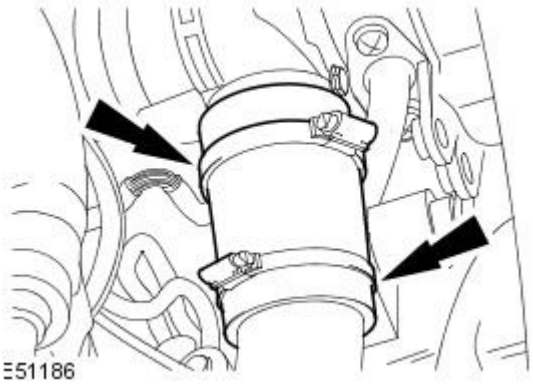


**9.** Connect the turbocharger outlet hose to the turbocharger.

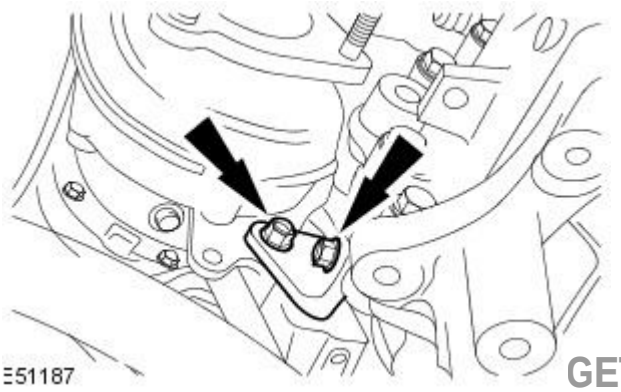


**10.** Install the turbocharger support bracket.

- Tighten to 23 Nm.

GETtheMANUALS.org

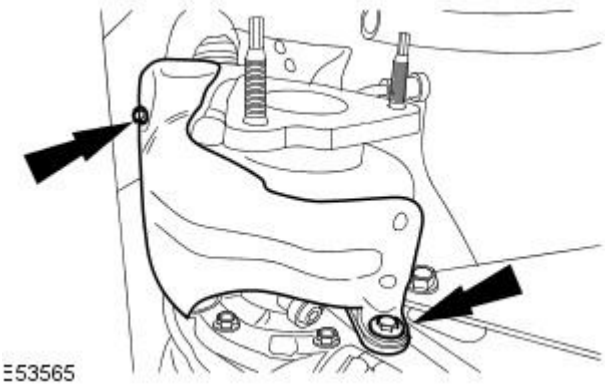


**11.** Install the turbocharger heatshield.

- Tighten to 6 Nm.

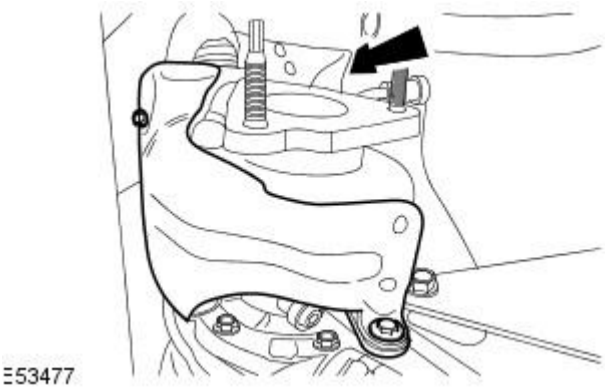


**12.** Tighten to 10 Nm.

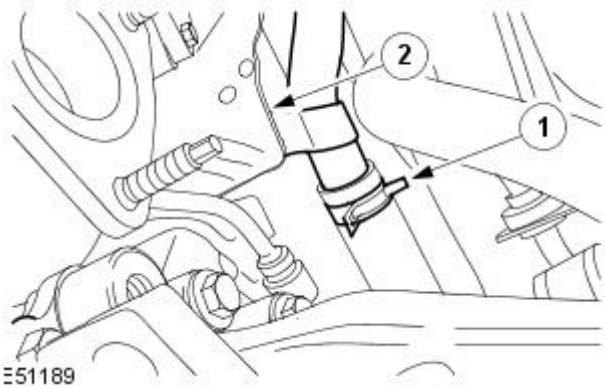


**13.** Install the EGR coolant inlet tube.

1. Connect the coolant hose.
2. Install the retaining nut.
   1. Tighten to 10 Nm.

**14.** Install the left-hand catalytic converter.
For additional information, refer to: Catalytic Converter - 2.7L V6 - TdV6 (309-00 Exhaust System, Removal and Installation).

**15.** Install the air deflector.
For additional information, refer to: Air Deflector (501-02 Front End Body Panels, Removal and Installation).

**16.** Attach the EGR cooler inlet tube to the EGR mounting bracket.

- Tighten to 10 Nm.

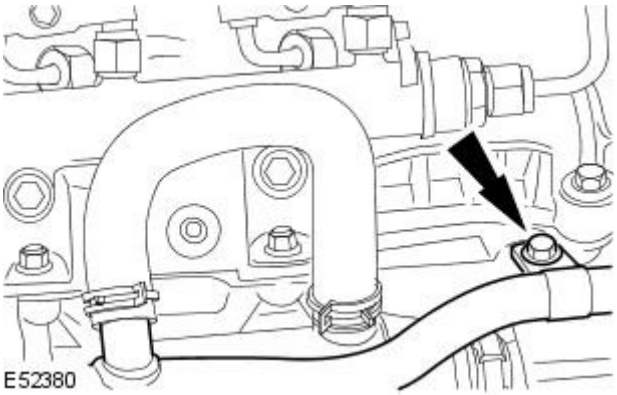


GETtheMANUALS.org

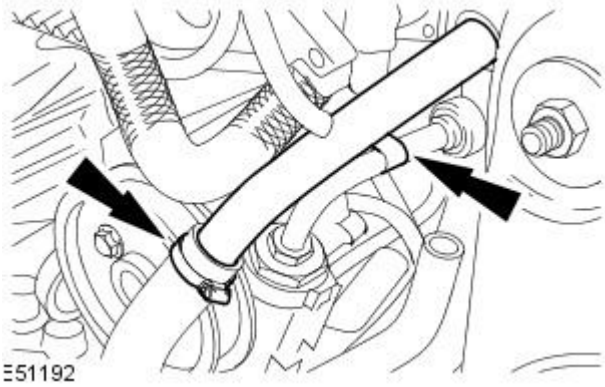


**17.** Attach the EGR cooler inlet tube to the power steering tube.

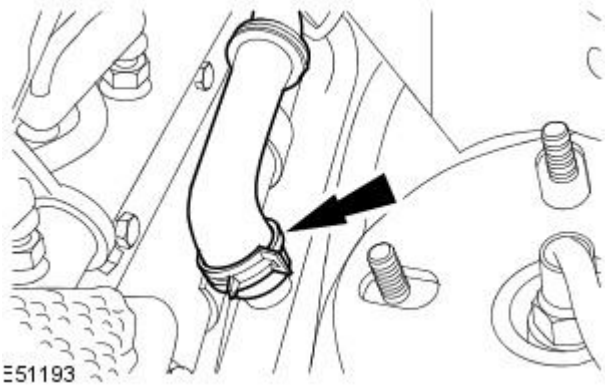


**18.** Connect the EGR cooler inlet hose.

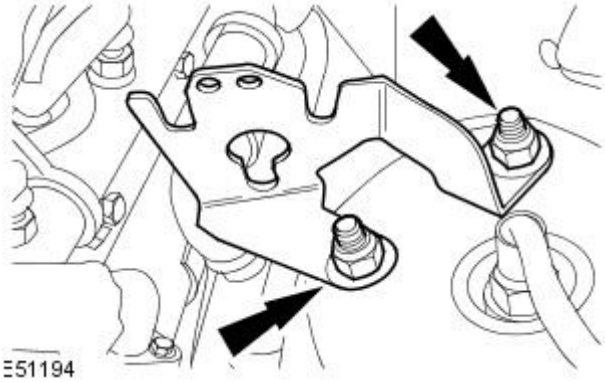


**19.** Install the fuel filter mounting bracket.

- Tighten to 25 Nm.

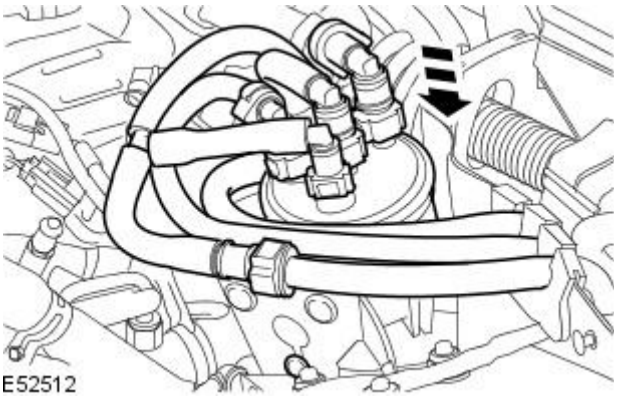


**20.** Attach the fuel filter to the mounting bracket.

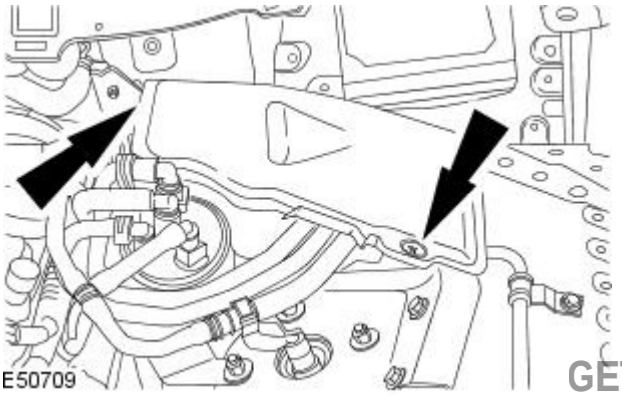


**21.** Install the left-hand engine compartment cover.

GETtheMANUALS.org

22. Install the power steering reservoir.
For additional information, refer to: Power Steering Fluid Reservoir (211-02 Power Steering, Removal and Installation).

23. Install the air cleaner.
For additional information, refer to: Air Cleaner (303-12C Intake Air Distribution and Filtering - 2.7L V6 - TdV6, Removal and Installation).

24. Install the cowl panel grille.
For additional information, refer to: Cowl Panel Grille (501-02 Front End Body Panels, Removal and Installation).

25. Fill and bleed the cooling system.
For additional information, refer to: Cooling System Draining, Filling and Bleeding (303-03C Engine Cooling - 2.7L V6 - TdV6, General Procedures).

26. Install the fuel injector soundproofing.

27. Install the engine cover.

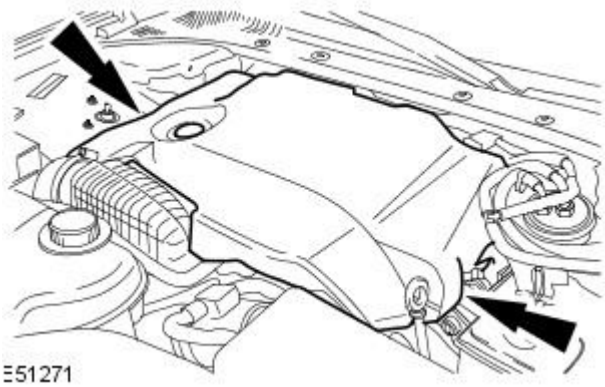


28. Install the oil filler cap.

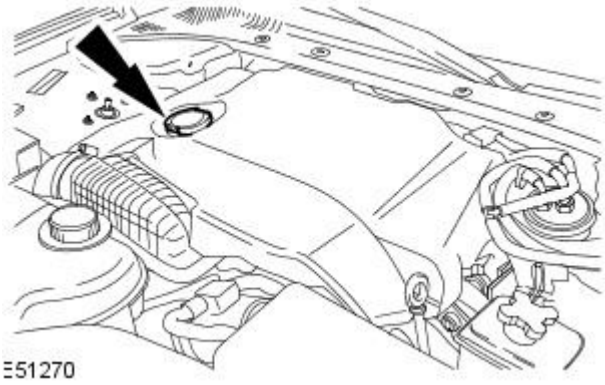


GETtheMANUALS.org

# Fuel Charging and Controls - Turbocharger - 2.7L V6 - TdV6 - Turbocharger RH

Removal and Installation

| Special Tool(s) | |
|---|---|
| 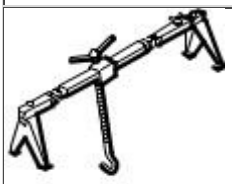 303-021 | Engine support beam<br><br>303-021 |
| E52720 | Engine lifting brackets<br><br>303-1129 |

## Removal

1. Remove the intake air shutoff throttle.
   For additional information, refer to: Intake Air Shutoff Throttle (303-04C Fuel Charging and Controls - 2.7L V6 - TdV6, Removal and Installation).
2. Remove the fuel injector soundproofing.
3. Remove the generator.
   For additional information, refer to: Generator - 2.7L V6 - TdV6 (414-02 Generator and Regulator, Removal and Installation).
4. Remove the starter motor.
   For additional information, refer to: Starter Motor - 2.7L V6 - TdV6 (303-06 Starting System, Removal and Installation).
5. Remove the cowl panel grille.
   For additional information, refer to: Cowl Panel Grille (501-02 Front End Body Panels, Removal and Installation).
6. Detach the right-hand air cleaner outlet tube from the timing cover.

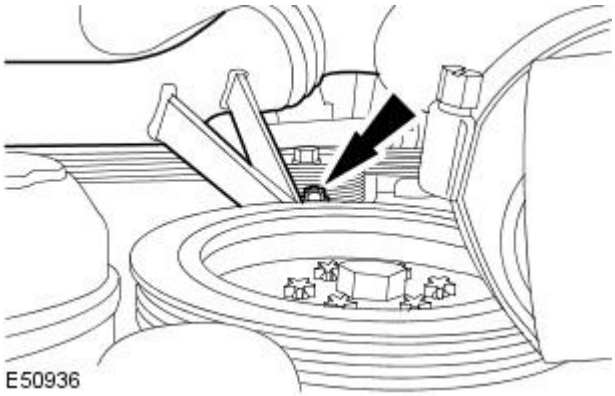


7. Remove the right-hand catalytic converter.
   For additional information, refer to: Catalytic Converter - 2.7L V6 - TdV6 (309-00 Exhaust System, Removal and Installation).
8. Detach the turbocharger outlet tube connecting hose.

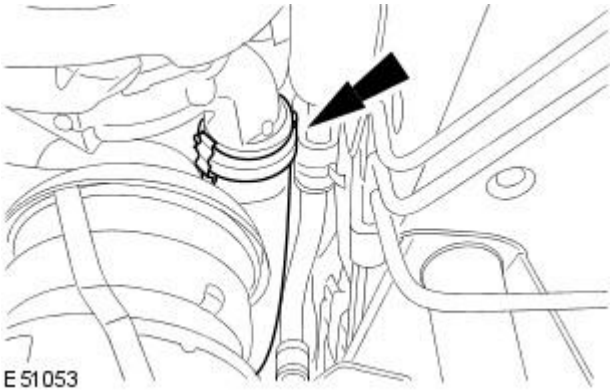


GETtheMANUALS.org

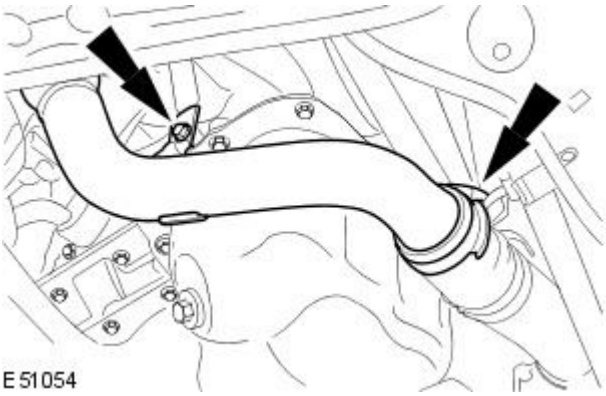


**9.** Remove the turbocharger outlet tube.

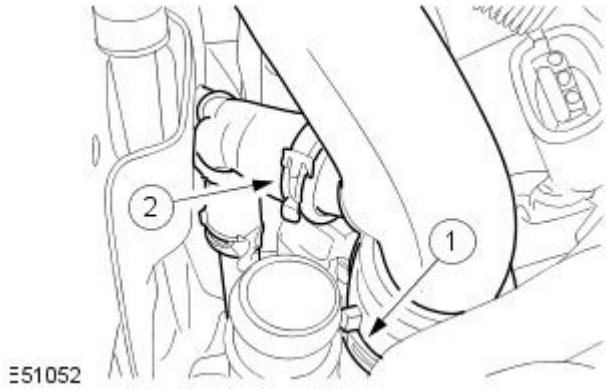


**10.** Remove the air cleaner outlet tube.

1. Detach the air cleaner outlet tube to turbocharger retaining clip.
2. Detach the air cleaner outlet tube to breather hose retaining clip.

- Remove the air cleaner outlet tube.

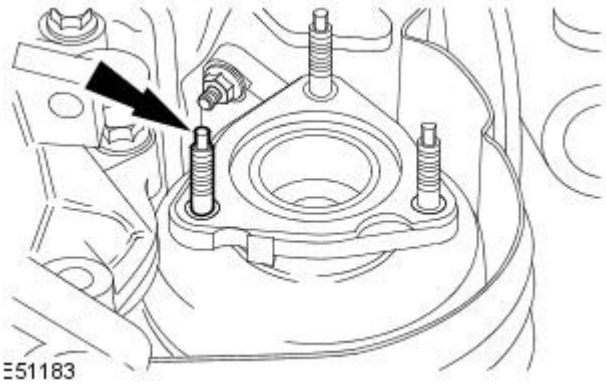


**11.** Remove and discard the catalytic converter retaining stud.

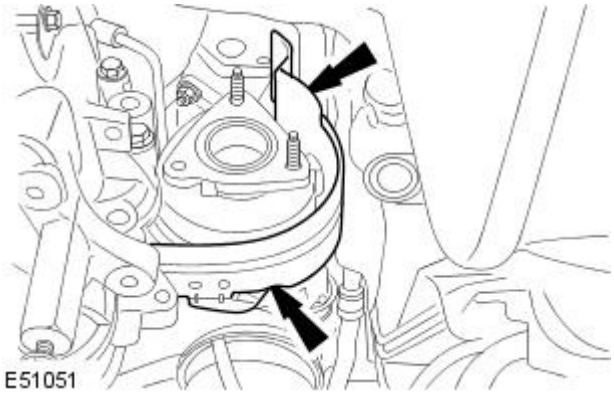


**12.** Remove the turbocharger heatshield.

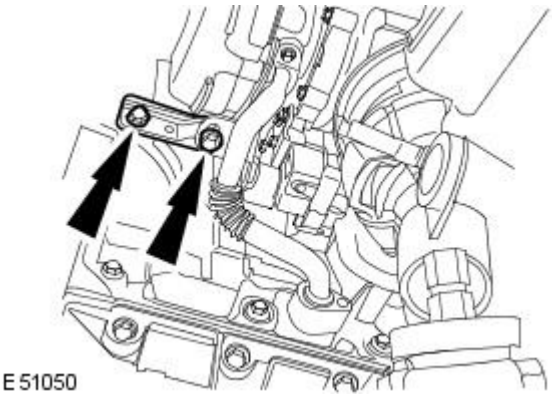


**13.** Remove the turbocharger support bracket.

GETtheMANUALS.org

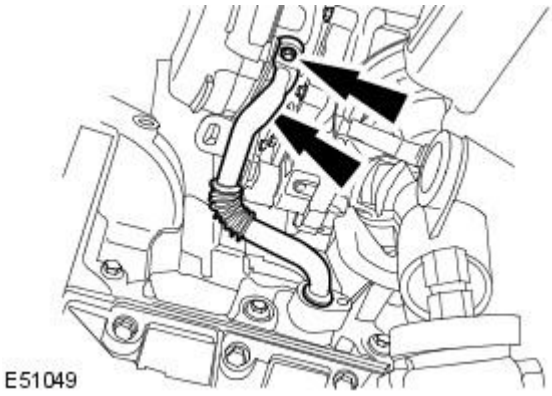


**14.** Disconnect the oil return tube from the turbocharger.

- Remove and discard the gasket.

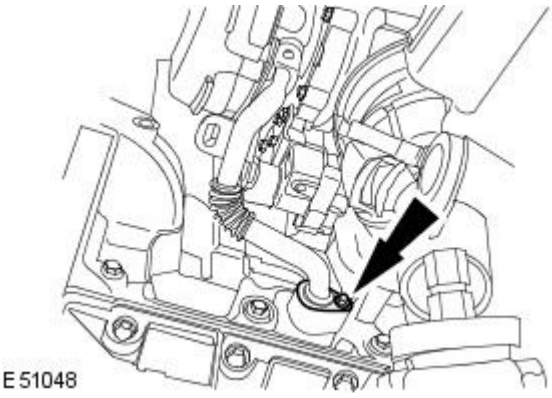


**15.** Remove the oil return tube retaining plate.

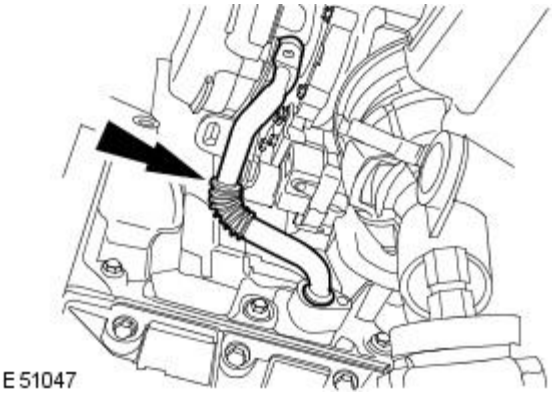


**16.** Remove the oil return tube.

- Remove and discard the O-ring seal.

**17.** Lower the vehicle.

**18.** Fit the front engine lifting brackets

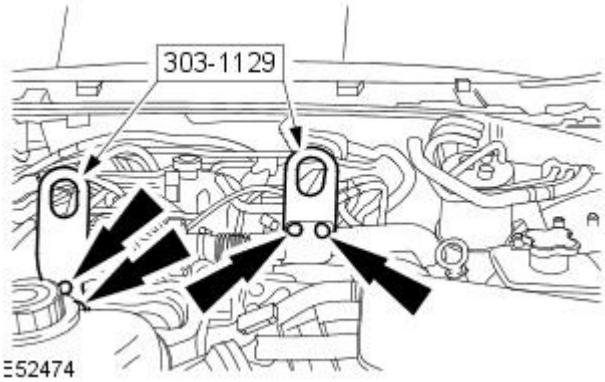


**19.** Fit the engine support beam.

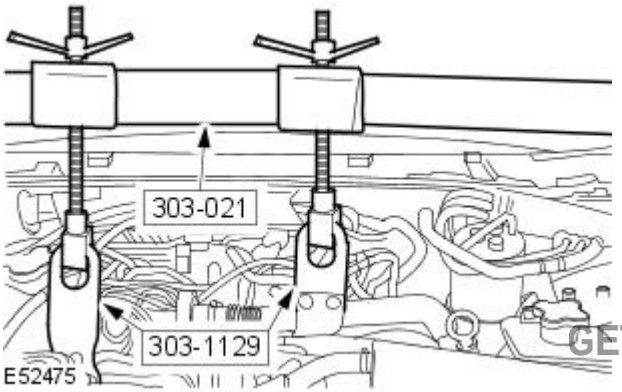


GETtheMANUALS.org

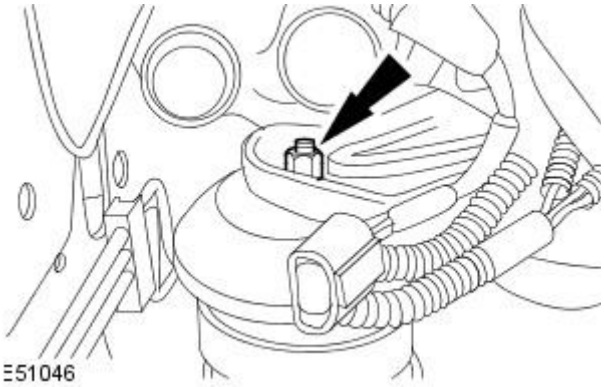


**20.** Detach the right-hand engine mounting.

**21.** Raise the engine.

**22.** Remove the right-hand engine mounting retaining nut.

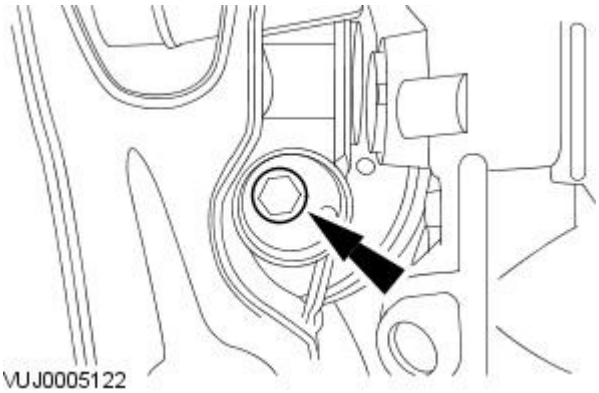


**23.** Remove the right-hand engine mounting bracket.

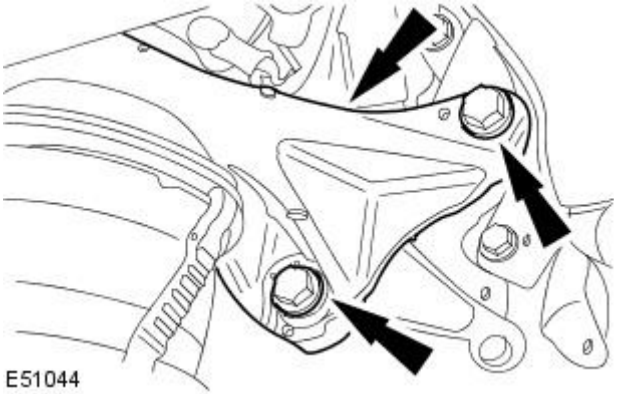


**24.** Remove the right-hand engine mounting.

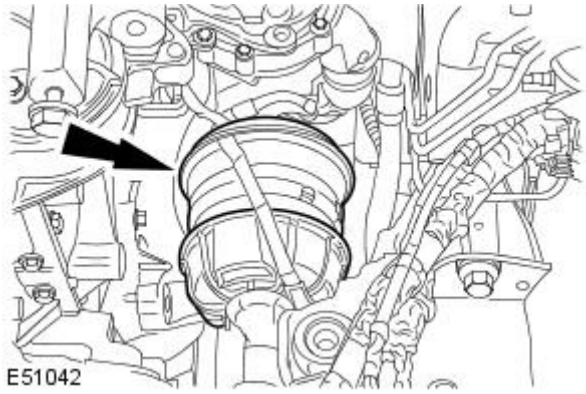


GETtheMANUALS.org

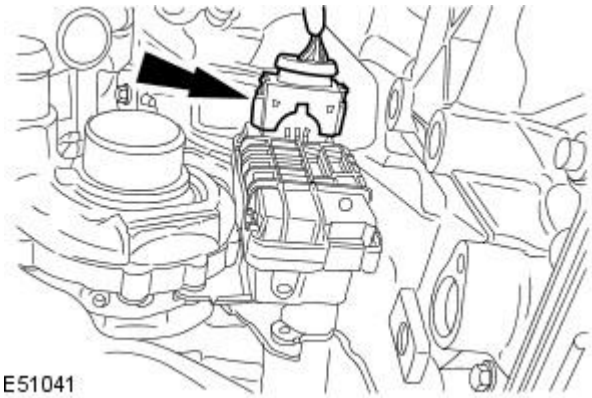


**25.** Disconnect the turbocharger solenoid electrical connector.

**26.** Lower the vehicle.

**27.** Disconnect the turbocharger oil supply tube.

- Remove and discard the sealing washers.

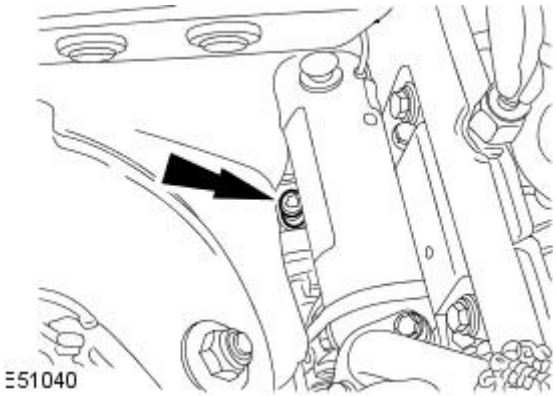


**28.** Raise the vehicle.

**29.** Remove the turbocharger.

- Discard the turbocharger retaining nuts.
- Remove and discard the turbocharger to exhaust manifold retaining studs.

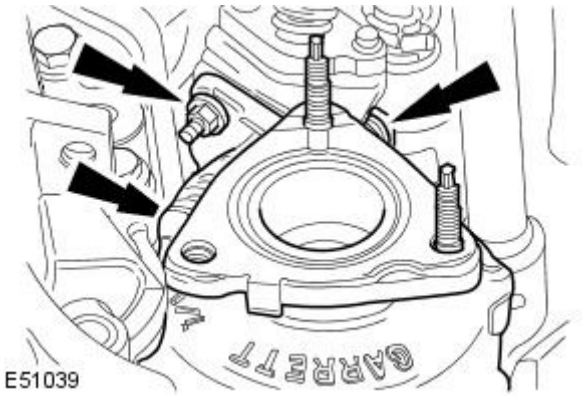


## Installation

**1.** Install the turbocharger.

- Install new turbocharger to exhaust manifold retaining studs.
- Install new turbocharger retaining nuts.
- Tighten to 23 Nm.

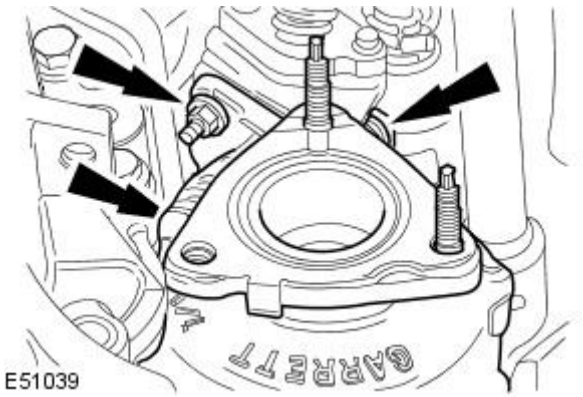


**2.** Lower the vehicle.

GETtheMANUALS.org

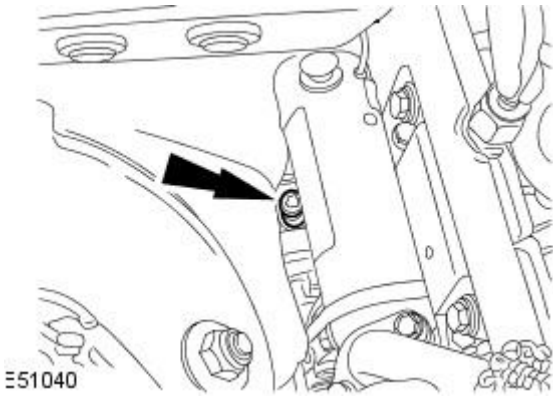


**3.** Connect the turbocharger oil supply tube.

- Install new sealing washers.
- Tighten to 30 Nm.

**4.** Raise the vehicle.

**5.** Connect the turbocharger solenoid electrical connector.

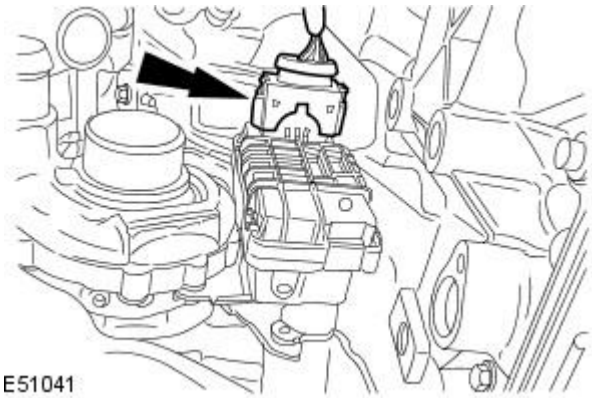


**6.** Install the right-hand engine mounting.

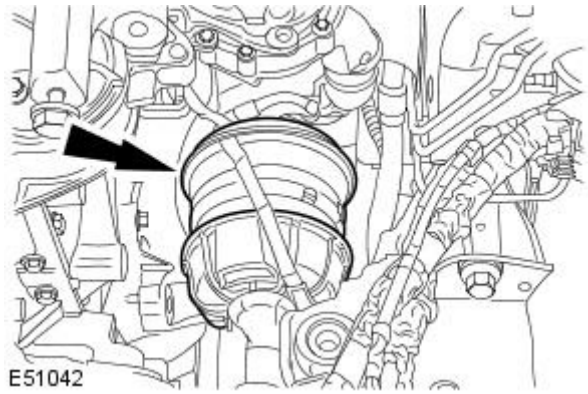


**7.** Install the right-hand engine mounting bracket.

- Tighten to 90 Nm.

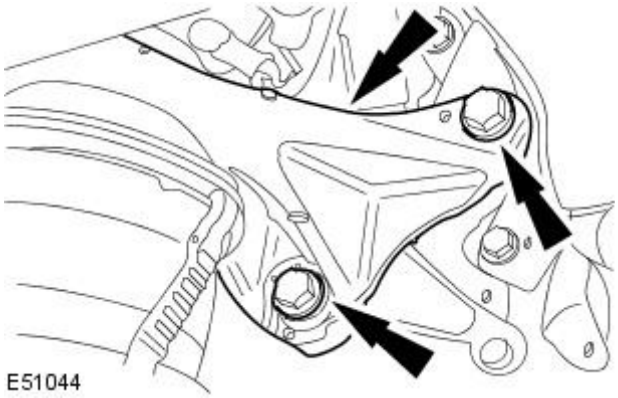


**8.** Tighten to 63 Nm.

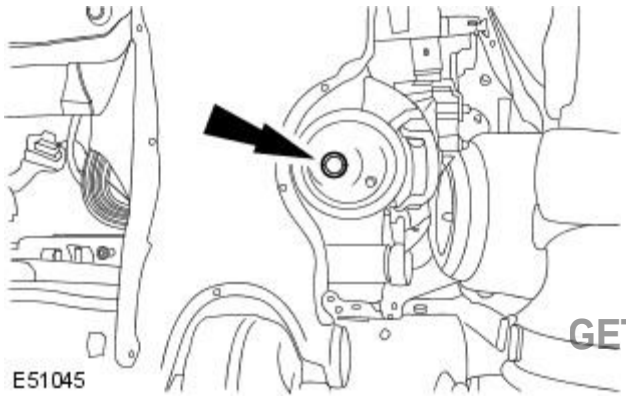


GETtheMANUALS.org

**9.** Lower the vehicle.

**10.** Lower the engine.

**11.** Tighten to 63 Nm.

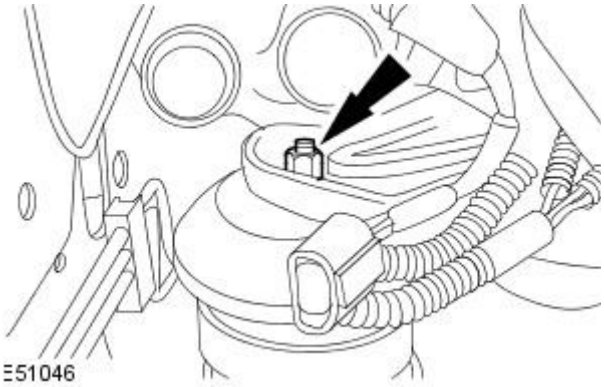


**12.** Remove the engine support beam.

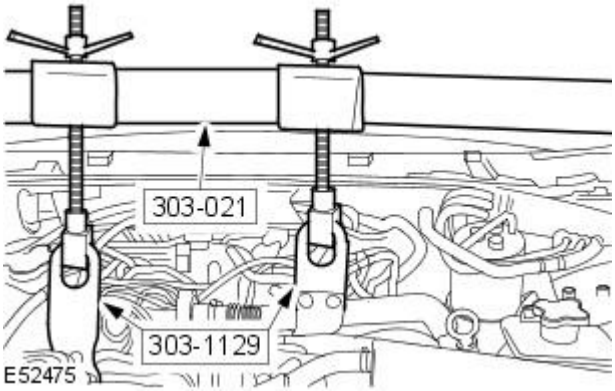


**13.** Remove the front engine lifting eyes.

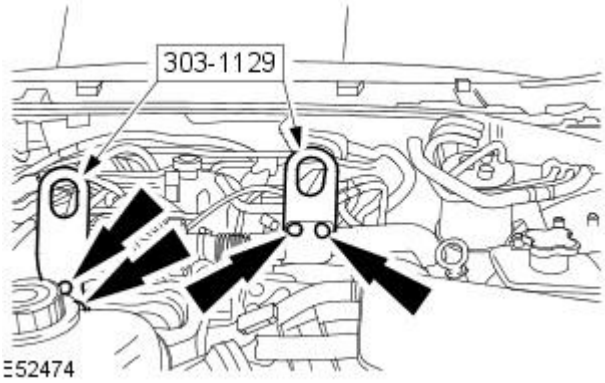


**14.** Raise the vehicle.

**15.** Install the oil return tube.

- Install a new O-ring seal.

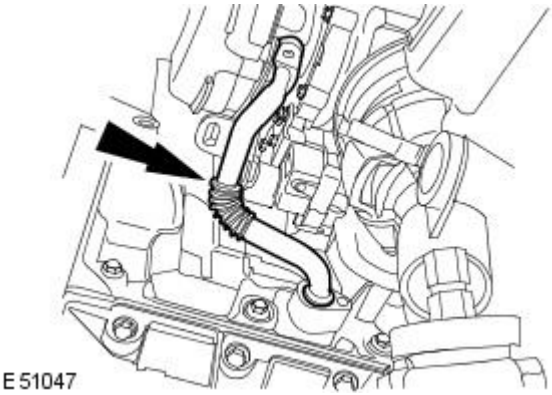


GETtheMANUALS.org

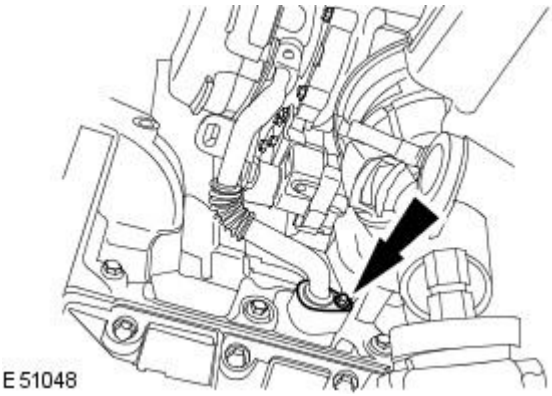


**16.** Install the oil return tube retaining plate.

- Tighten to 10 Nm.

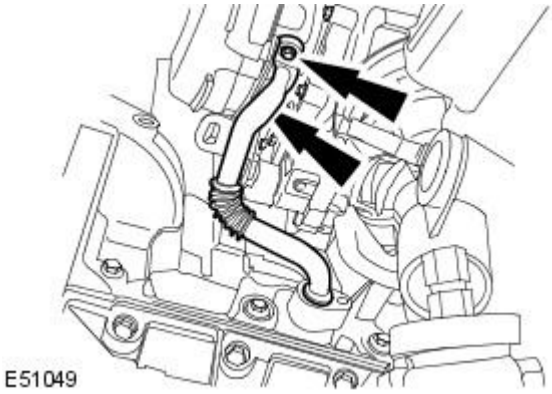


**17.** Connect the oil return tube to the turbocharger.

- Install a new gasket.

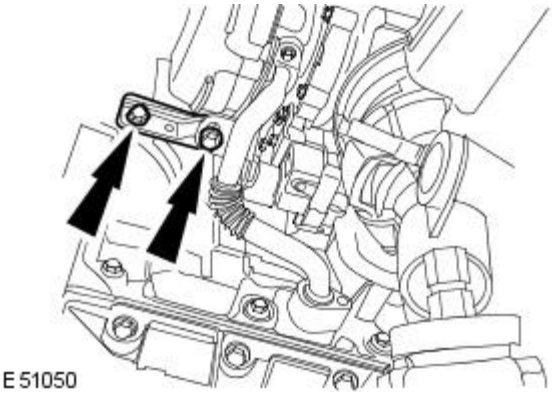


**18.** Install the turbocharger support bracket.

- Tighten to 23 Nm.

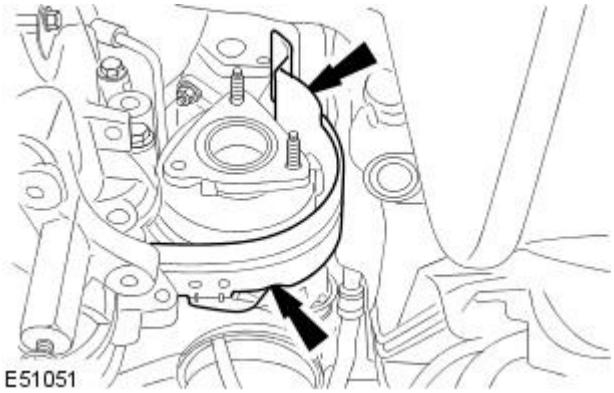


**19.** Install the turbocharger heatshield.

- Tighten to 10 Nm.

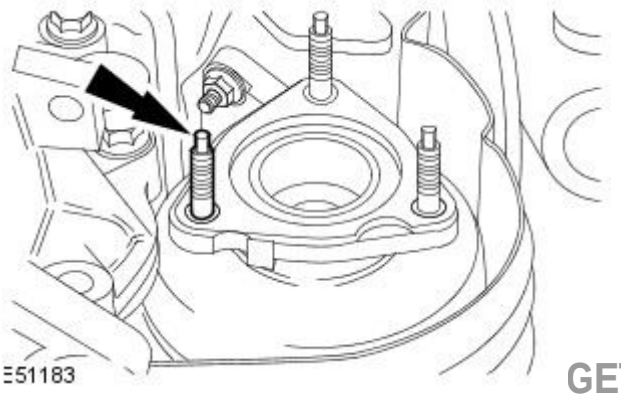


**20.** Install a new catalytic converter retaining stud.

GETtheMANUALS.org

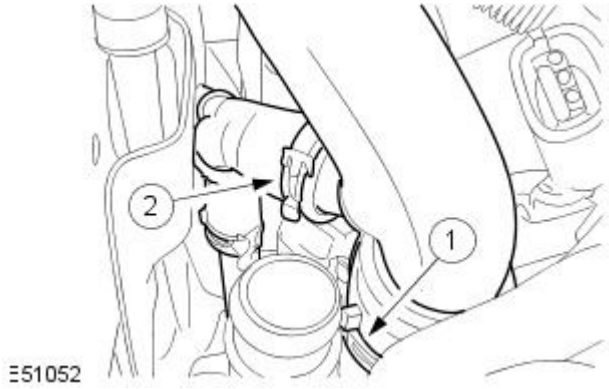


**21.** Install the air cleaner outlet tube.

1. Attach the air cleaner outlet tube to turbocharger retaining clip.
2. Attach the air cleaner outlet tube to breather hose retaining clip.

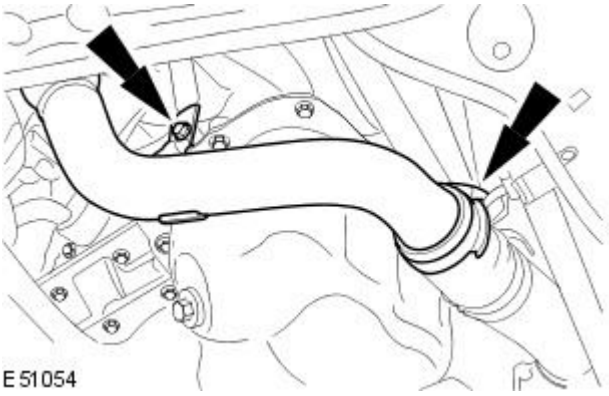


**22.** Install the right-hand turbocharger outlet tube.

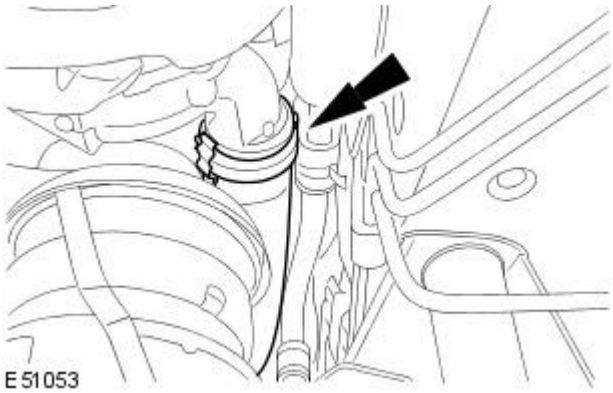


**23.** Attach the right-hand turbocharger outlet tube connecting hose.

**24.** Install the right hand catalytic converter.
For additional information, refer to: Catalytic Converter - 2.7L V6 - TdV6 (309-00 Exhaust System, Removal and Installation).

**25.** Attach the right-hand air cleaner outlet tube to the timing cover.

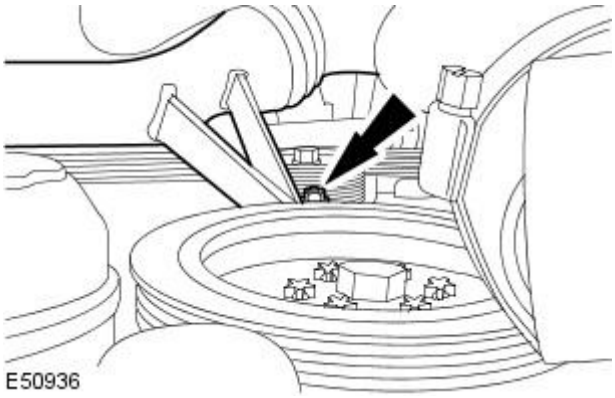


**26.** Install the starter motor.
For additional information, refer to: Starter Motor - 2.7L V6 - TdV6 (303-06 Starting System, Removal and Installation).

**27.** Install the generator.
For additional information, refer to: Generator - 2.7L V6 - TdV6 (414-02 Generator and Regulator, Removal and Installation).

**28.** Install the cowl panel grille.
For additional information, refer to: Cowl Panel Grille (501-02 Front End Body Panels, Removal and Installation).

**29.** Install the fuel injector soundproofing.

**30.** Install the intake air shutoff throttle.
For additional information, refer to: Intake Air Shutoff Throttle (303-04C Fuel Charging and Controls - 2.7L V6 - TdV6, Removal and Installation).

GETtheMANUALS.com

# Accessory Drive -

**Torque Specifications**

| Description | Nm | lb-ft | lb-in |
|---|---|---|---|
| Accessory drive belt tensioner retaining bolt - Vehicles with 2.5L or 3.0L engine | 45 | 33 | - |
| Accessory drive belt tensioner retaining bolt - Vehicles with 2.7L Diesel engine | 47 | 35 | - |
| Accessory drive belt tensioner retaining bolt - Vehicles with 4.2L engine | 40 | 30 | - |
| Accessory drive belt idler pulley retaining bolt - Vehicles with 2.5L, 3.0L or 4.2L engine | 25 | 18 | - |
| Accessory drive belt idler pulley retaining bolt - Vehicles with 2.7L Diesel engine | 47 | 35 | - |
| Fuel injection pump belt rear cover retaining bolts - Vehicles with 2.7L Diesel engine | 7 | - | 62 |
| Camshaft rear pulley retaining bolt - Vehicles with 2.7L Diesel engine | A | - | - |
| Fuel injection pump pulley retaining bolt - Vehicles with 2.7L Diesel engine | 50 | 37 | - |
| Fuel injection pump belt tensioner retaining bolt - Vehicles with 2.7L Diesel engine | 25 | 18 | - |
| Supercharger belt tensioner retaining bolt | 40 | 30 | - |
| Supercharger belt idler pulley retaining bolt | 40 | 30 | - |

A = refer to procedure for correct tightening sequence

GETtheMANUALS.org

# Accessory Drive - Accessory Drive

Description and Operation

Vehicles with 2.5L or 3.0L engine

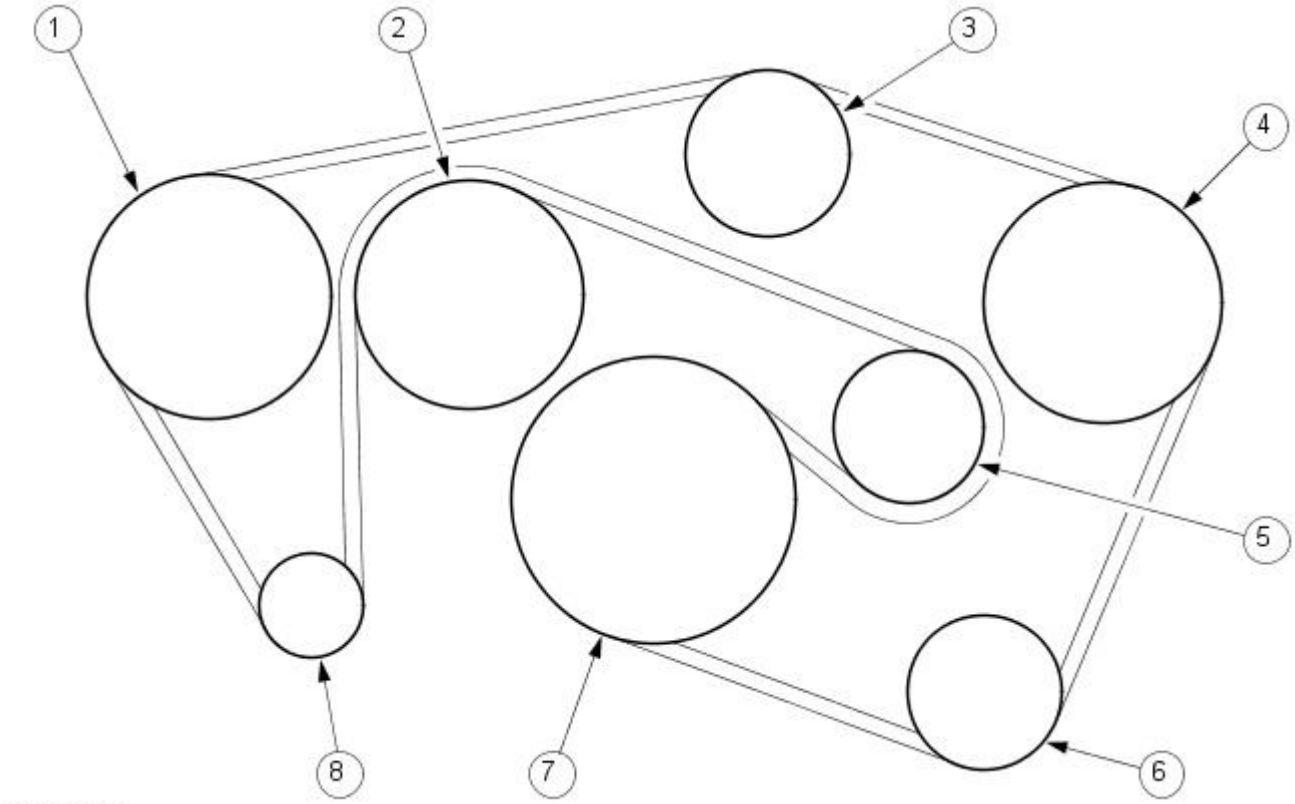


VUJ0000139

| Item | Part Number | Description |
|---|---|---|
| 1 | — | Accessory drive belt idler pulley |
| 2 | — | Water pump pulley |
| 3 | — | Accessory drive belt idler pulley |
| 4 | — | Power steering pump pulley |
| 5 | — | Accessory drive belt tensioner |
| 6 | — | Air conditioning compressor pulley |
| 7 | — | Crankshaft pulley |
| 8 | — | Generator pulley |

Vehicles with 2.7L Diesel engine

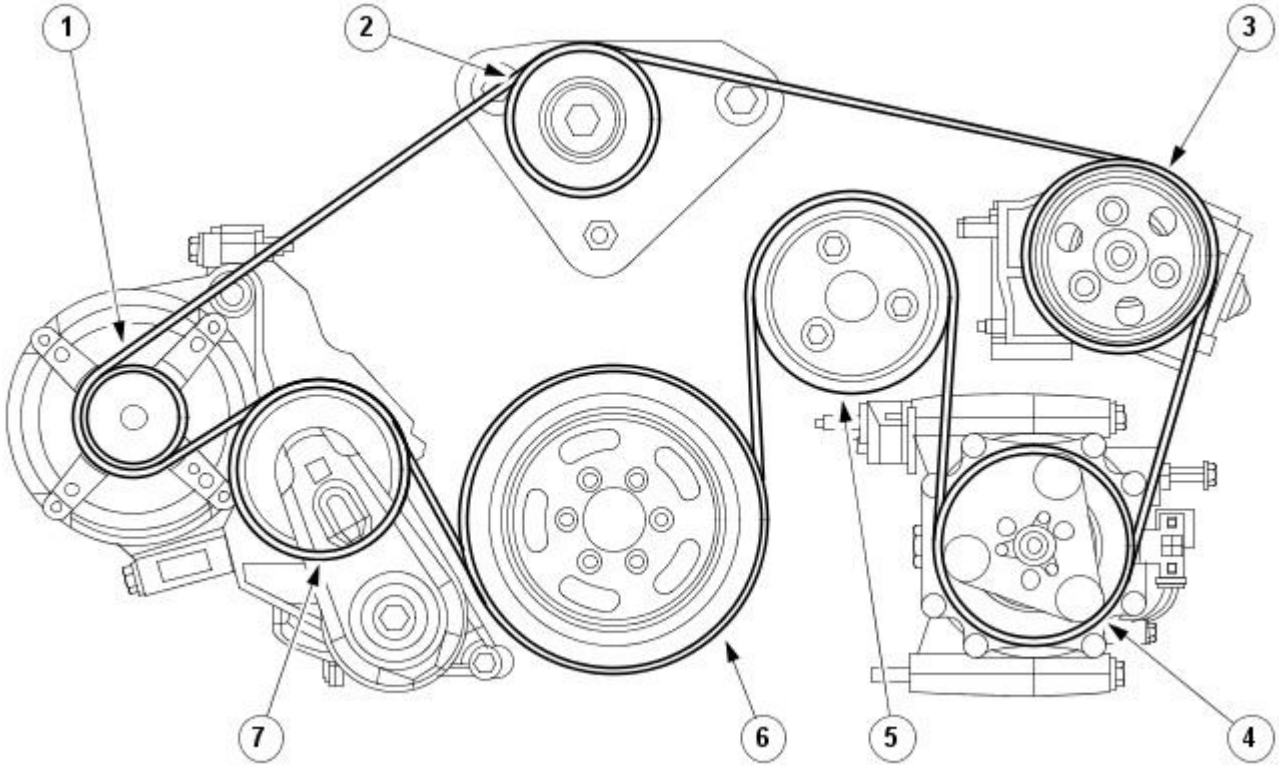


E 50935

GETtheMANUALS.org

| Item | Part Number | Description |
|---|---|---|
| 1 | - | Generator pulley |

| | | |
|---|---|---|
| 2 | - | Accessory drive belt idler pulley |
| 3 | - | Power steering pump pulley |
| 4 | - | Air conditioning compressor pulley |
| 5 | - | Water pump pulley |
| 6 | - | Crankshaft pulley |
| 7 | - | Accessory drive belt tensioner |

Vehicles with 4.2L engine

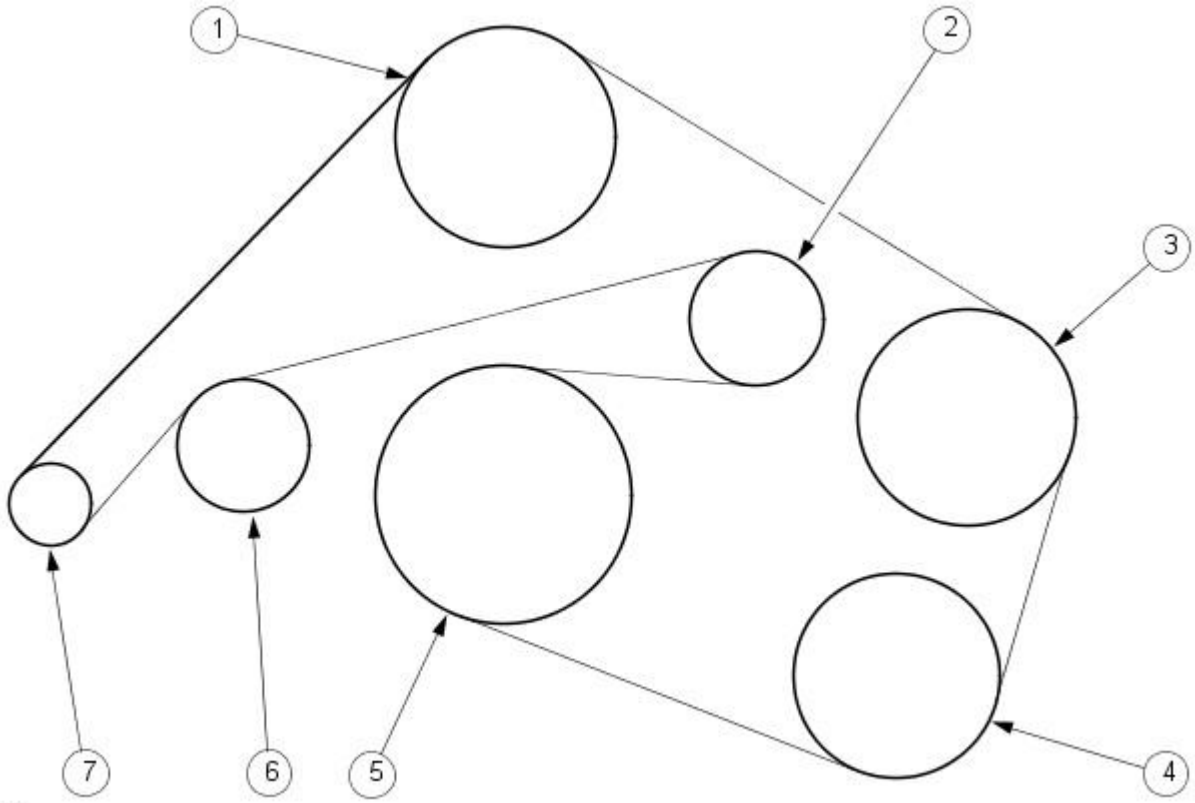


VUJ0005595

| Item | Part Number | Description |
|---|---|---|
| 1 | — | Water pump pulley |
| 2 | — | Accessory drive belt tensioner |
| 3 | — | Power steering pump pulley |
| 4 | — | Air conditioning compressor pulley |
| 5 | — | Crankshaft pulley |
| 6 | — | Accessory drive belt idler pulley |
| 7 | — | Generator pulley |

Vehicles with supercharger

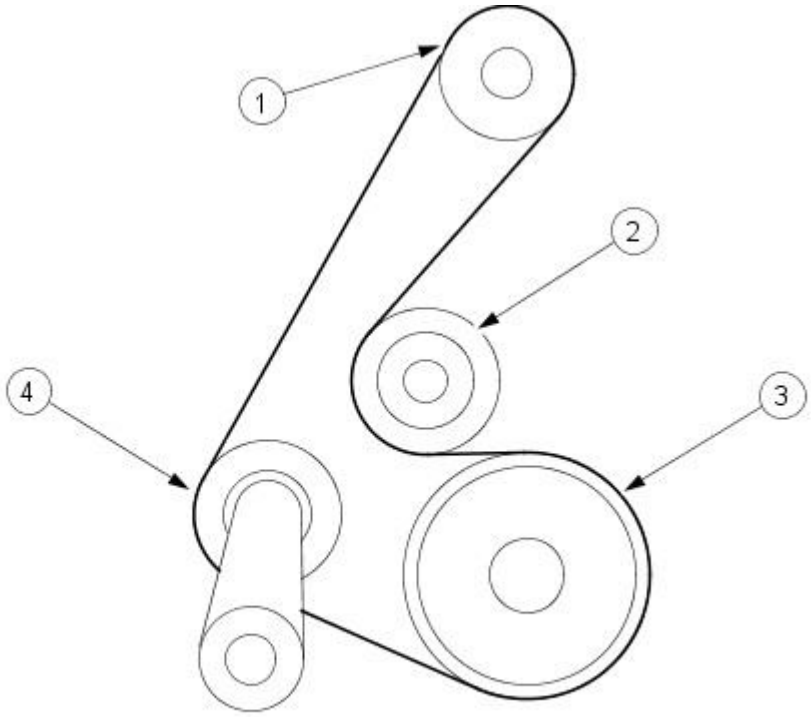


E30190

| Item | Part Number | Description |
|---|---|---|
| 1 | — | Supercharger pulley |
| 2 | — | Supercharger belt idler pulley |
| 3 | — | Crankshaft pulley |

GETtheMANUALS.org

| | | |
|---|---|---|
| 4 | — | Supercharger belt tensioner |

## Crankshaft Pulley

The combined crankshaft pulley and torsional vibration damper drives a single, six ribbed vee belt. The belt drives all of the engine-mounted accessories such as the generator, the power assisted steering pump, the air-conditioning compressor and the coolant water pump.

## Air Conditioning Compressor Drive

This is positioned at the lowest point of the front-end accessory drive on the left hand side accessory mounting.

## Power Assisted Steering Pump Drive

The power assisted steering pump pulley is located on the left-hand side, above the air conditioning compressor.

## Generator Drive

The generator is fitted on the right hand accessory mounting.

## Supercharger Drive

The supercharger is located between the left-hand and right-hand cylinders and retained at three mounting points.

## Accessory drive belt tensioner and supercharger belt tensioner

The accessory drive belt tensioner and supercharger belt tensioner is calibrated to provide the correct amount of tension to the belt for a given drive system. Unless a spring within the tensioner assembly breaks, or some other mechanical part of the tensioner fails, there is no need to check the tensioner for correct tension.

## Accessory drive belt and supercharger belt

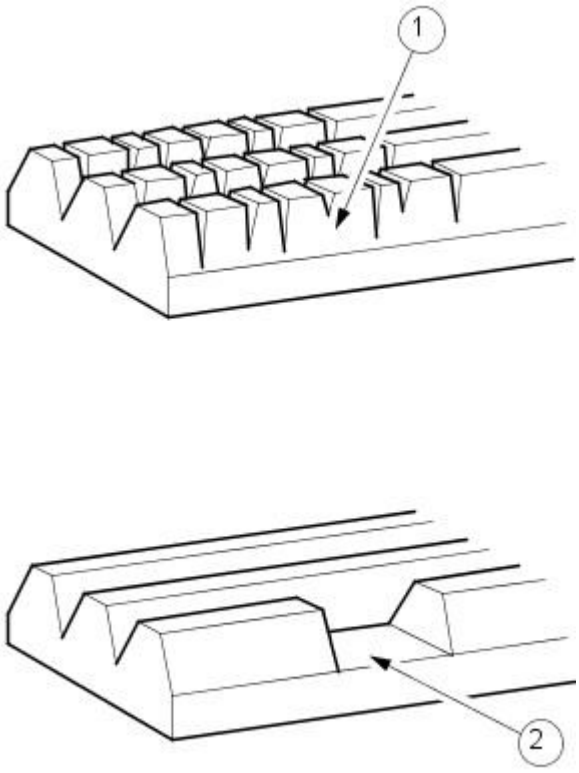


VUJ0000908

| Item | Description |
|---|---|
| 1 | Acceptable drive belt cracking |
| 2 | Unacceptable drive belt damage |

The accessory drive belt and the supercharger belt should be inspected at every routine service for excessive wear and damage. A drive belt which displays symptoms of cracking may be perfectly fit for further service.

Should cracking be detected, serviceability may be assessed using the following guidelines:

- Fifteen cracks per rib over a 100 mm length of drive belt is acceptable.
- Section(s) of belt missing from any rib is not acceptable and the drive belt must be renewed.

## Accessory drive belt tensioner

GETtheMANUALS.org

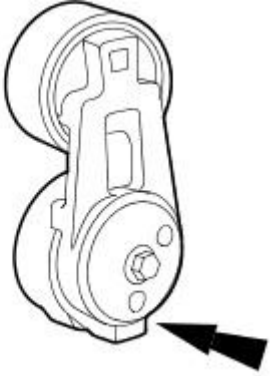

E30135

The accessory drive belt tensioner consists of an idler pulley which is free to rotate on a bearing, located at the end of a spring-loaded pivot arm.

The pivot arm can be turned counter-clockwise (viewed from the front of the engine) for accessory drive belt removal and installation.

The accessory drive belt wear indicators are incorporated on the bottom of the accessory drive belt tensioner. When the indicators are aligned the accessory drive belt requires replacing.

GETtheMANUALS.org

# Accessory Drive - Accessory DriveV8 4.2L Petrol/V8 S/C 4.2L Petrol/2.5L NA V6 - AJV6/3.0L NA V6 - AJ27

Diagnosis and Testing

## Inspection and Verification

1. **1.** Verify the customer concern.
2. **2.** Visually inspect for obvious signs of mechanical damage.

**Visual Inspection Chart**

| Mechanical |
|---|
| Accessory drive belt |
| Accessory drive belt tension |
| Accessory drive belt tensioner |
| Accessory drive belt pulleys |
| Supercharger belt |
| Supercharger belt tension |
| Supercharger belt tensioner |
| Supercharger belt pulley |

3. **3.** If an obvious cause for an observed or reported concern is found, correct the cause (if possible) before proceeding to the next step.
4. **4.** If the concern is not visually evident, verify the symptom and refer to the Symptom Chart.

## Symptom Chart

**Symptom Chart**

| Symptom | Possible Sources | Action |
|---|---|---|
| Accessory drive belt noise or squeal | * Accessory drive belt pulley(s).<br>* Lubricant or other contamination.<br>* Accessory drive belt. | * DETERMINE where the noise is coming from. CHECK pulley alignment, freedom of rotation or damage. REPAIR or INSTALL new parts as necessary.<br>* CHECK accessory drive belt for contamination. If contaminated, INSTALL a new accessory drive belt.<br>* CHECK accessory drive belt for correct application. |
| Accessory drive belt does not hold tension. | * Accessory drive belt cracking or damaged.<br>* Tensioner worn or damaged. | * INSPECT accessory drive belt for cracking or damage. INSTALL a new accessory drive belt if required.<br>* CHECK accessory drive belt tensioner for damage and correct operation. INSTALL a new accessory drive belt tensioner if required. |
| Supercharger belt noise or squeal | * Supercharger belt pulley.<br>* Lubricant or other contamination.<br>* Supercharger belt. | * DETERMINE where the noise is coming from. CHECK pulley alignment, freedom of rotation or damage. REPAIR or INSTALL new parts as necessary.<br>* CHECK supercharger belt for contamination. If contaminated, INSTALL a new supercharger belt.<br>* CHECK supercharger belt for correct application. |
| Supercharger belt does not hold tension. | * Supercharger belt cracking or damaged.<br>* Tensioner worn or damaged. | * INSPECT supercharger belt for cracking or damage. INSTALL a new supercharger belt if required.<br>* CHECK supercharger belt tensioner for damage and correct operation. INSTALL a new supercharger belt tensioner if required. |

## Component Tests

### Accessory drive belt tensioner or supercharger belt tensioner-mechanical

The only mechanical check that needs to be made is a check for the accessory drive belt tensioner or supercharger belt tensioner "stick, grab or bind".

1. **1.** Remove the drive belt in the area of the drive belt tensioner .
2. **2.** Using the correct tool, rotate the drive belt tensioner from its relaxed position through its full stroke and back to the relaxed position to make sure there is no "stick, grab or bind", and to make sure that there is tension on the drive belt tensioner spring.
3. **3.** If the drive belt tensioner meets the above criteria, proceed to test the drive belt tensioner dynamically. If the drive belt tensioner does not meet the above criteria install a new drive belt tensioner.
   REFER to Accessory Drive belt tensioner 2.5L/3.0L /
   Accessory Drive belt tensioner 4.2L /
   Supercharger belt tensioner in this section.

### Accessory drive belt tensioner or supercharger belt tensioner-dynamic

The accessory drive belt tensioner or supercharger belt can be checked dynamically as follows:

1. **1.** With the engine running, observe drive belt tensioner movement, the accessory drive belt tensioner should move (respond) when the air conditioning clutch cycles (if equipped), both the accessory drive belt tensioner and supercharger belt tensioner should move (respond) when the engine is accelerated rapidly. If the drive belt tensioner movement is erratic without air conditioning clutch cycling or engine acceleration, a pulley or shaft is probably bent, or a pulley is distorted. Excessive drive belt rideout (uneven depth of grooves in the drive belt) can cause excessive drive belt tensioner movement. Check condition by installing a new accessory drive belt.
   REFER to Accessory Drive Belt-2.5L/3.0L /
   Accessory Drive Belt-4.2L /
   Supercharger belt in this section.
2. **2.** With the engine off, check routing of the accessory drive belt.
   REFER to Description and Operation in this section.
3. **3.** Inspect the drive belt tensioner wear indicator to confirm the accessory drive belt is within operating range. Install a new accessory drive belt or supercharger belt if necessary.
   REFER to Accessory Drive Belt-2.5L/3.0L /
   Accessory Drive Belt-4.2L /

GETtheMANUALS.org

Supercharger belt in this section.

4. **4.** Rotate the accessory drive belt tensioner and check for a binding or seized condition. Install a new accessory drive belt tensioner or supercharger belt tensioner if necessary.
   REFER to Accessory Drive belt tensioner 2.5L/3.0L /
   Accessory Drive belt tensioner 4.2L /
   Supercharger belt tensioner in this section.

GETtheMANUALS.org

# Accessory Drive - Accessory Drive2.7L V6 - TdV6

Diagnosis and Testing

## Principles of Operation

The 2.7L diesel engine uses two accessory drive systems, the front end accessory drive (FEAD), and the fuel injection pump drive.

FEAD

The FEAD drives: the coolant pump, the generator, the power assisted steering pump, and the air conditioning compressor, driven from the crankshaft pulley via a single six-ribbed belt.

Fuel injection pump drive

The high-pressure fuel pump (HPFP) is driven from the exhaust camshaft of the left-hand cylinder bank, by a single, toothed belt.

The HPFP is **NOT** timed to the engine.

## Inspection and Verification

1. **1.** Verify the customer concern.

**Visual inspection chart**

| FEAD | Fuel injection pump belt |
|---|---|
| • Belt condition (cracking/damage/contamination)<br>• Belt tension<br>• Function of driven components (siezed, etc)<br>• Pulley alignment | • Security/correct fitment of cover<br>• Check for debris inside the cover<br>• Belt condition (cracking/damage/contamination)<br>• Belt tension |

## Noise definitions

| Description of noise | Definition / Possible cause |
|---|---|
| Squeal | Continuous shriek, most noticeable when the engine is accelerated (usually associated with lack of belt tension, contamination or wet slip) |
| Chirp | Twittering noise that usually stops at engine speeds above idle. Usually associated with misaligned pulleys |
| Whine | Continuous noise, changing frequency with engine speed, generally associated with rotating components (generator, idler, etc) |
| Rattle | Metallic knocking, often a loose component or tensioner fault |
| Rumble | Bearing noise |

## Symptoms (FEAD)

| Symptom | Possible cause | Action |
|---|---|---|
| Noise (see definitions above) | • Belt condition<br>• Belt tension<br>• Pulleys misaligned<br>• Driven components | Check the belt condition (see visual inspection). Check the tensioner function. GO to Pinpoint Test A. Check the pulley alignment. Check the driven components for excessive resistance to rotation. Rectify as necessary. |
| Drive belt does not hold tension | • Belt condition<br>• Tensioner fault | Check the belt condition (see visual inspection). Check the tensioner function. Rectify as necessary. |

## Symptoms (Fuel injection pump belt)

| Symptom | Possible cause | Action |
|---|---|---|
| Noise (see definitions above) | • Belt condition<br>• Belt fouling cover<br>• Tensioner bearing failure<br>• HPFP failure | Check the belt condition (see visual inspection). Check the belt cover for indications of fouling (this may indicate a pump misalignment,<br>REFER to: Fuel Injection Pump (303-04C Fuel Charging and Controls - 2.7L V6 - TdV6, Removal and Installation).<br>). The belt tensioner must be renewed if the belt is removed, making a check of the bearing impractical. Remove the belt, check the HPFP pulley for security. Check the HPFP for excessive resistance to rotation (excessive resistance in the pump will cause the pulley securing nut to loosen as a design feature). Check for DTCs indicating a pump malfunction,<br>REFER to: Fuel Charging and Controls (303-04C Fuel Charging and Controls - 2.7L V6 - TdV6, Diagnosis and Testing). |
| Loss of drive (with no drive to the HPFP, the engine will not run) | • Belt broken/stripped teeth<br>• Drive pulleys loose | Investigate the cause of the belt breakage/damage (a belt broken at a 45 degree angle normally indicates a shear, a break straight across the belt normally indicates that the belt has been crimped). Check the HPFP for excessive resistance to rotation (excessive resistance in the pump will cause the pulley securing nut to loosen as a design feature). Check for DTCs indicating a pump malfunction,<br>REFER to: Fuel Charging and Controls (303-04C Fuel Charging and Controls - 2.7L V6 - TdV6, Diagnosis and Testing). |

## Pinpoint tests

| PINPOINT TEST A : ELIMINATE THE FEAD AS THE SOURCE OF NOISE | |
|---|---|
| CAUTION: The engine should not be run for long periods of time with the FEAD belt removed. Failure to follow this instruction may result in damage to the vehicle. | |
| **TEST CONDITIONS** | **DETAILS/RESULTS/ACTIONS** |
| **A1: CHECK FOR THE PRESENCE OF NOISE WITH THE FEAD BELT DISCONNECTED** | |
| | 1 Remove the ignition key. |

GETtheMANUAL.org

| | |
|---|---|
| | 2 Disconnect the FEAD belt,<br>REFER to: Accessory Drive Belt - 2.7L V6 - TdV6 (303-05 Accessory Drive, Removal and Installation). |
| | 3 Start the engine and allow to idle. |
| | 4 Check for the presence of the noise. |
| | Is the noise still apparent?<br>**Yes**<br>The FEAD is not the cause of the noise. Confirm the symptoms, check for alternative causes.<br>**No**<br>Inspect the FEAD belt and driven components. Check the driven components for excessive resistance to rotation. |

GETtheMANUALS.org

# Accessory Drive - Accessory Drive Belt2.5L NA V6 - AJV6 / 3.0L NA V6 - AJ27

Removal and Installation

## Removal

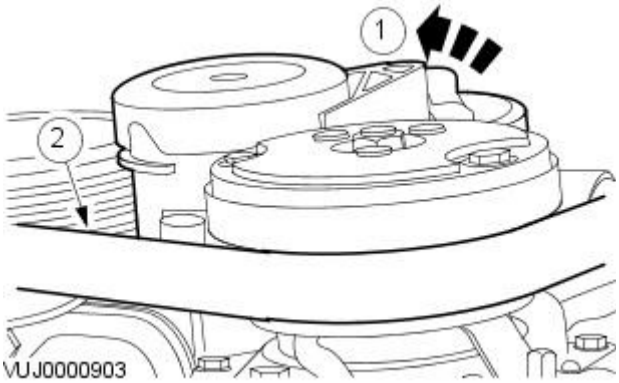


1. Disconnect the battery ground cable.
   For additional information, refer to Section 414-01 Battery, Mounting and Cables.
2. Remove the air deflector.
   For additional information, refer to Section 501-02 Front End Body Panels.
3. Remove the accessory drive belt.
   1. Rotate the accessory drive belt tensioner counter-clockwise.
      1. Use a 3/8 inch square drive bar to rotate the accessory drive belt tensioner.
   2. Remove the accessory drive belt.

## Installation

1. To install, reverse the removal procedure.

GETtheMANUALS.org

# Accessory Drive - Accessory Drive Belt2.7L V6 - TdV6

Removal and Installation

| Special Tool(s) | |
|---|---|
| 303-703 | Accessory belt detensioner.<br><br>303-703 |

## Removal

1. Disconnect the battery.
   For additional information, refer to: Battery Disconnect and Connect (414-01 Battery, Mounting and Cables, General Procedures).
2. Remove the air deflector.
   For additional information, refer to: Air Deflector (501-02 Front End Body Panels, Removal and Installation).
3. Reposition the air outlet pipe.

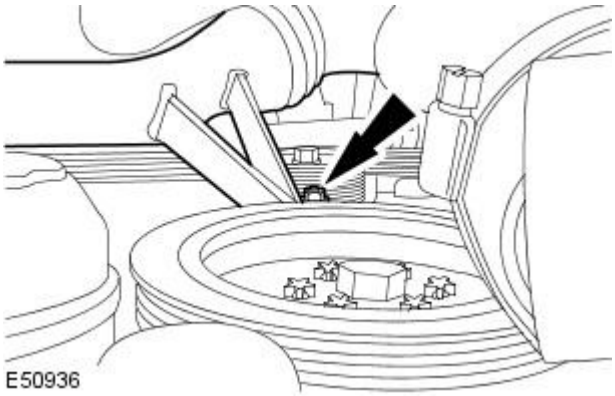


4. Remove the accessory drive belt.
   1. Using the special tool, rotate the accessory drive belt tensioner counter clockwise.
   2. Remove the accessory drive belt.

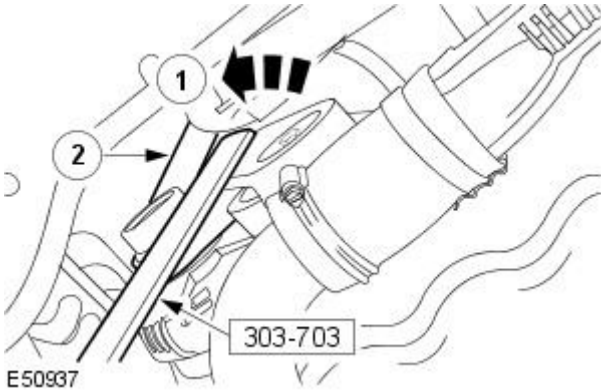


## Installation

1. To install, reverse the removal procedure.

GETtheMANUALS.org

# Accessory Drive - Accessory Drive Belt

Removal and Installation

## Removal

All vehicles

1. Disconnect the battery ground cable.
   For additional information, refer to: Battery Disconnect and Connect (414-01 Battery, Mounting and Cables, General Procedures).
2. Remove the air cleaner outlet pipe.
   For additional information, refer to: Air Cleaner Outlet Pipe (303-12B Intake Air Distribution and Filtering - V8 4.2L Petrol/V8 S/C 4.2L Petrol, Removal and Installation).

Vehicles with supercharger

3. Remove the supercharger belt.
   For additional information, refer to: Supercharger Belt (303-05 Accessory Drive, Removal and Installation).

All vehicles

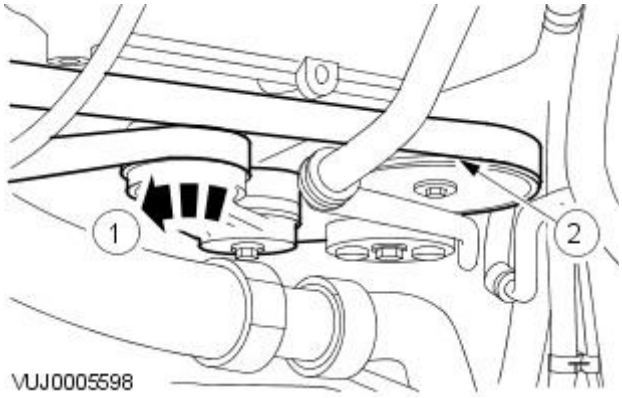


4. Detach the accessory drive belt.
   1. Rotate the accessory drive belt tensioner counter-clockwise.
      1. Use a 3/8 inch square drive bar to rotate the accessory drive belt tensioner.
   2. Detach the accessory drive belt.

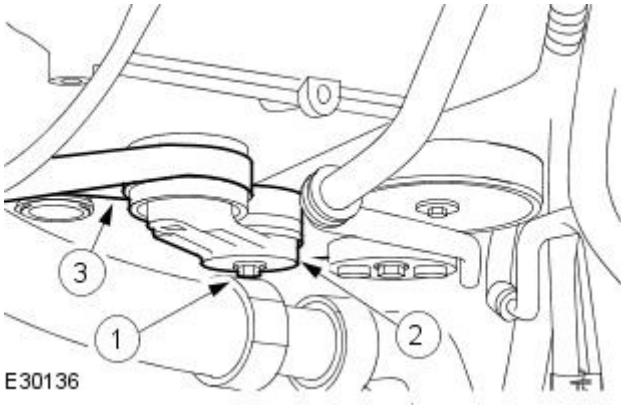


5. Remove the accessory drive belt.
   1. Remove the accessory drive belt tensioner retaining bolt.
   2. Remove the accessory drive belt tensioner.
   3. Remove the accessory drive belt.

## Installation

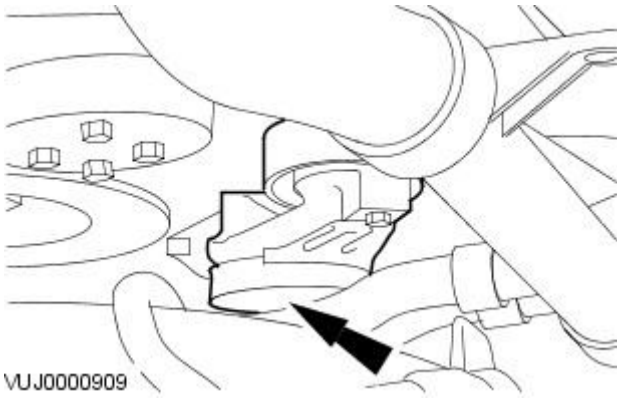


1. To install, reverse the removal procedure.
   - Tighten to 40 Nm.

GETtheMANUALS.org

# Accessory Drive - Accessory Drive Belt Idler Pulley2.5L NA V6 - AJV6 / 3.0L NA V6 - AJ27

Removal and Installation

## Removal

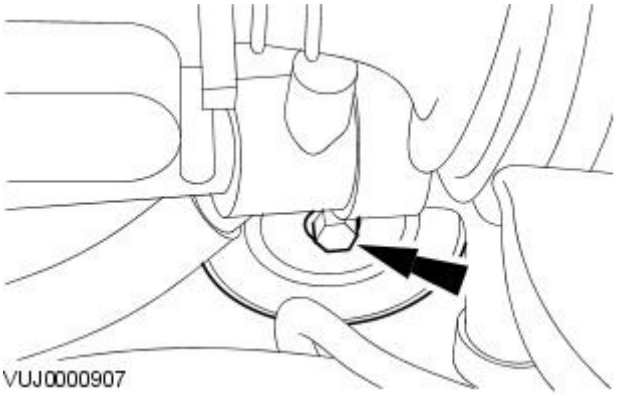


1. Remove the accessory drive belt.
   For additional information, refer to Accessory Drive Belt - 2.5L/3.0L in this section.
2. Lower the vehicle.
3. Remove the accessory drive belt idler pulley.

## Installation

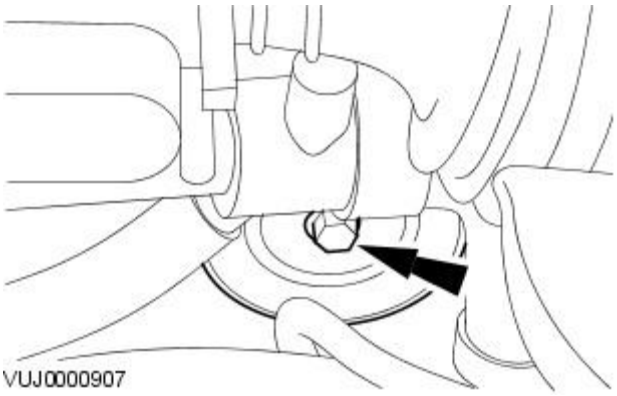


1. To install, reverse the removal procedure.
   - Tighten to 25 Nm.

GETtheMANUALS.org

# Accessory Drive - Accessory Drive Belt Idler Pulley2.7L V6 - TdV6

Removal and Installation

| Special Tool(s) | |
|---|---|
| 303-703 | Accessory belt detensioner.<br><br>303-703 |

## Removal

1. Disconnect the battery.
   For additional information, refer to: Battery Disconnect and Connect (414-01 Battery, Mounting and Cables, General Procedures).
2. Remove the air deflector.
   For additional information, refer to: Air Deflector (501-02 Front End Body Panels, Removal and Installation).
3. Detach the accessory drive belt.
   1. Using the special tool, rotate the accessory drive belt tensioner counter clockwise.
   2. Detach the accessory drive belt.

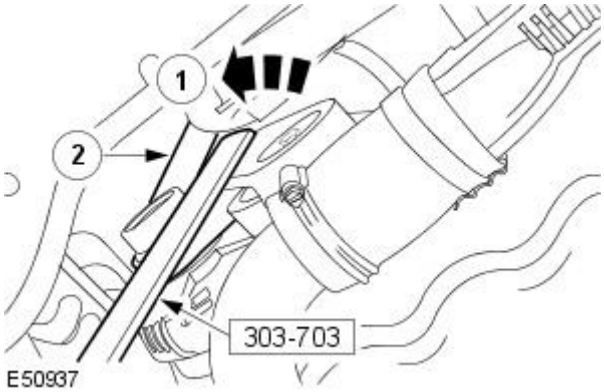


4. Remove the accessory drive belt idler pulley.

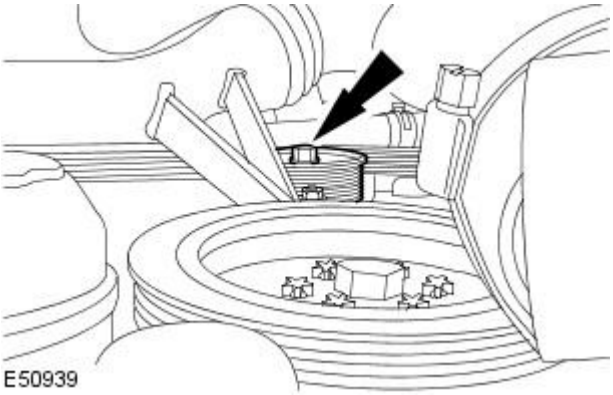


## Installation

1. To install, reverse the removal procedure.
   - Tighten to 47 Nm.

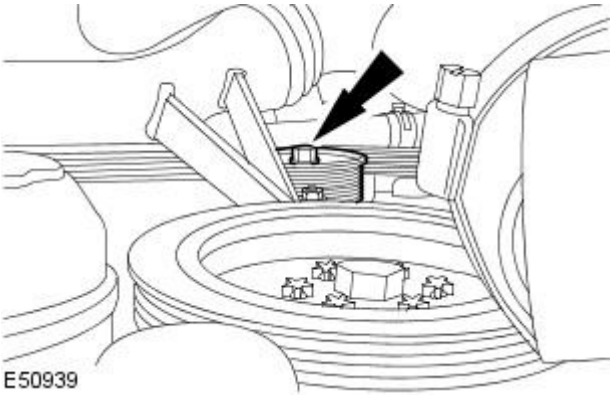


GETtheMANUALS.org

# Accessory Drive - Accessory Drive Belt Idler PulleyV8 4.2L Petrol/V8 S/C 4.2L Petrol, VIN Range: M44998->N52047

Removal and Installation

## Removal

All vehicles

1. Disconnect the battery ground cable.
   For additional information, refer to: Battery Disconnect and Connect (414-01 Battery, Mounting and Cables, General Procedures).
2. Remove the air cleaner outlet pipe.
   For additional information, refer to: Air Cleaner Outlet Pipe (303-12B Intake Air Distribution and Filtering - V8 4.2L Petrol/V8 S/C 4.2L Petrol, Removal and Installation).

Vehicles with supercharger

3. Remove the supercharger belt.
   For additional information, refer to: Supercharger Belt (303-05 Accessory Drive, Removal and Installation).

All vehicles

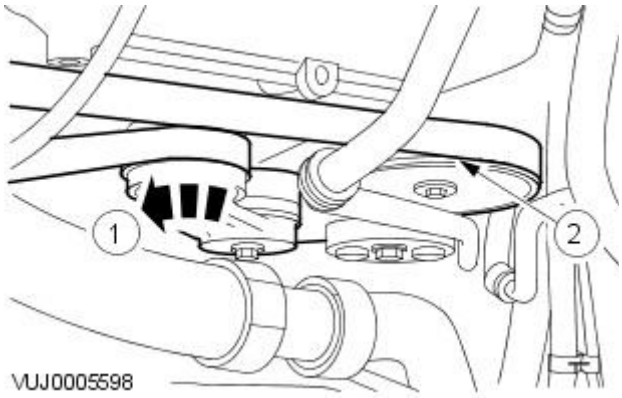


4. Detach the accessory drive belt.
   1. Rotate the accessory drive belt tensioner counter-clockwise.
      1. Use a 3/8 inch square drive bar to rotate the accessory drive belt tensioner.
   2. Detach the accessory drive belt.

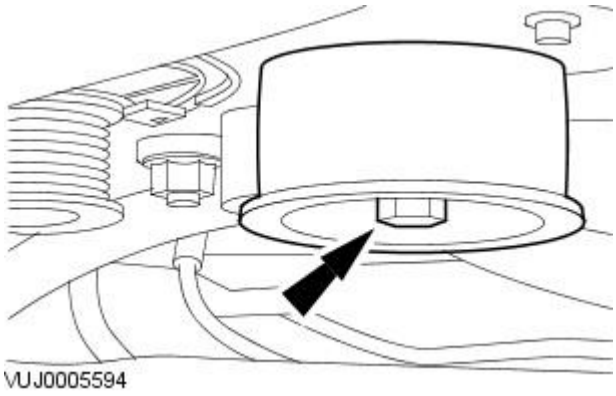


5. Remove the accessory drive belt idler pulley.

## Installation

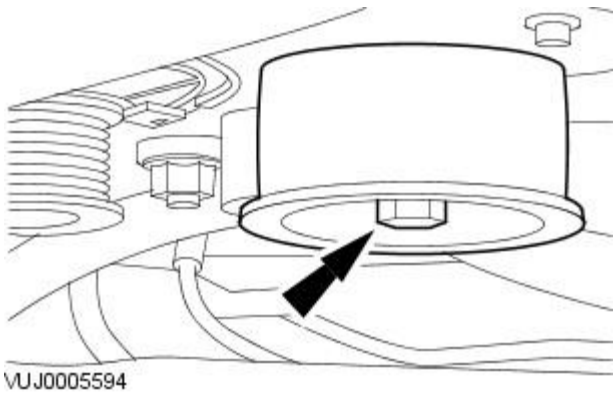


1. To install, reverse the removal procedure.
   - Tighten to 25 Nm.

GETtheMANUALS.org

# Accessory Drive - Accessory Drive Belt Idler PulleyV8 4.2L Petrol/V8 S/C 4.2L Petrol, VIN Range: N52048->R99999

Removal and Installation

## Removal

All vehicles

1. Disconnect the battery ground cable.For additional information, refer to: Battery Disconnect and Connect (414-01 Battery, Mounting and Cables, General Procedures).
2. Remove the air cleaner outlet pipe.For additional information, refer to: Air Cleaner Outlet Pipe (303-12B Intake Air Distribution and Filtering - V8 4.2L Petrol/V8 S/C 4.2L Petrol, Removal and Installation).

Vehicles with supercharger

3. Remove the supercharger belt.For additional information, refer to: Supercharger Belt (303-05 Accessory Drive, Removal and Installation).

All vehicles

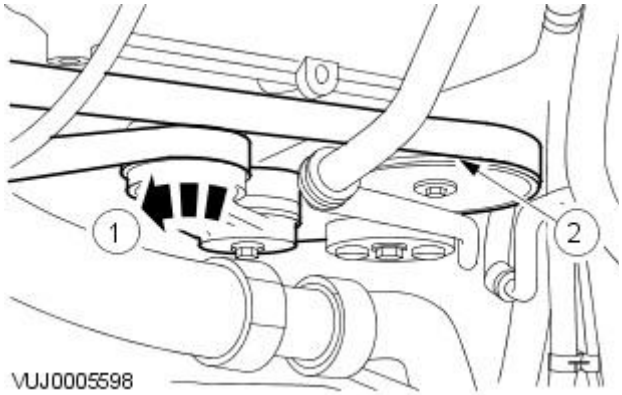


4. Detach the accessory drive belt.
   - Using a 3/8 inch square drive bar, rotate the accessory drive belt tensioner counter-clockwise.
   - Detach the accessory drive belt.

Vehicles without supercharger

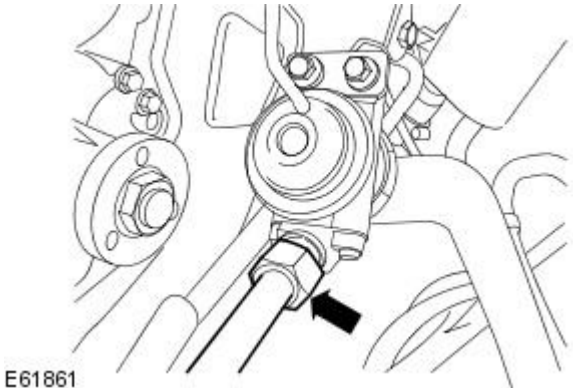


5. NOTE: Vehicles with supercharger shown, vehicles without supercharger similar.

   Disconnect the secondary air injection (AIR) control valve to exhaust manifold tube.

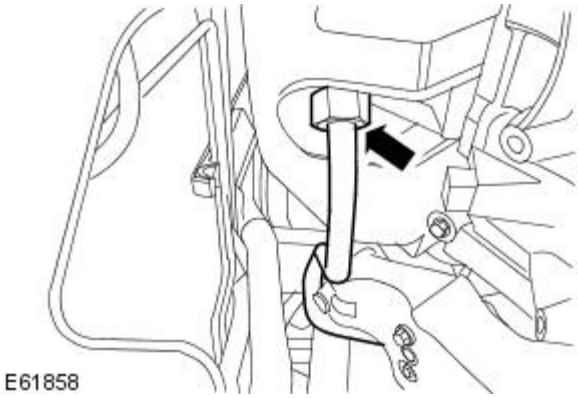


6. Remove the air deflector.For additional information, refer to: Air Deflector (501-02 Front End Body Panels, Removal and Installation).
7. CAUTION: Care must be taken when disconnecting the AIR control valve to exhaust manifold tube. Failure to follow these instructions may result in damage to the A/C pipes.

   Disconnect the AIR control valve to exhaust manifold tube from the LH exhaust manifold.

All vehicles

GETtheMANUALS.org

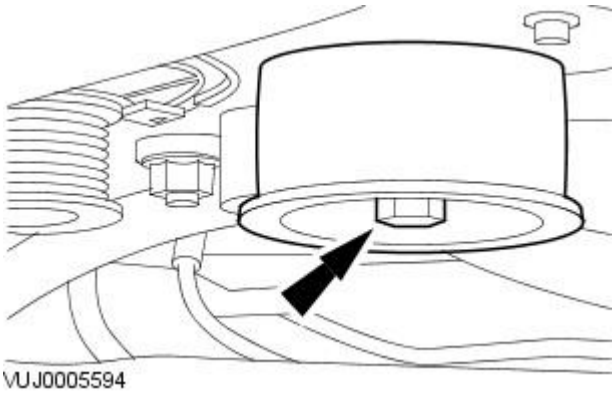


**8.** Remove the accessory drive belt idler pulley.

## Installation

All vehicles

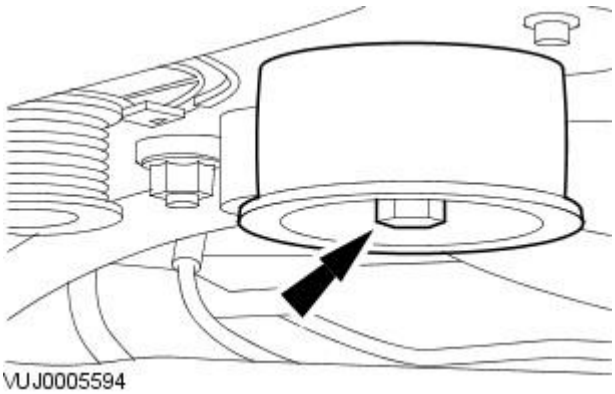


**1.** To install, reverse the removal procedure.

- Tighten to 25 Nm.

Vehicles without supercharger

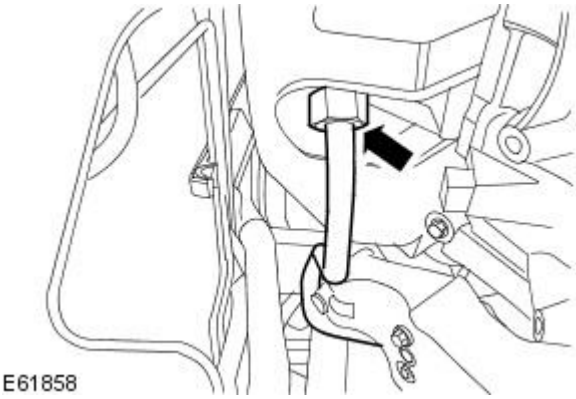


**2.** Tighten to 35 Nm.

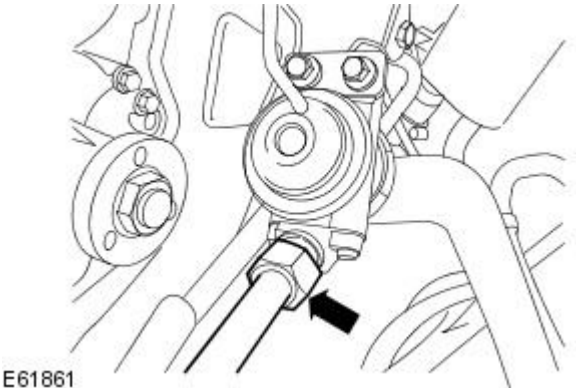


**3.** Tighten to 35 Nm.

GETtheMANUALS.org

# Accessory Drive - Accessory Drive Belt Tensioner2.5L NA V6 - AJV6 / 3.0L NA V6 - AJ27

Removal and Installation

## Removal

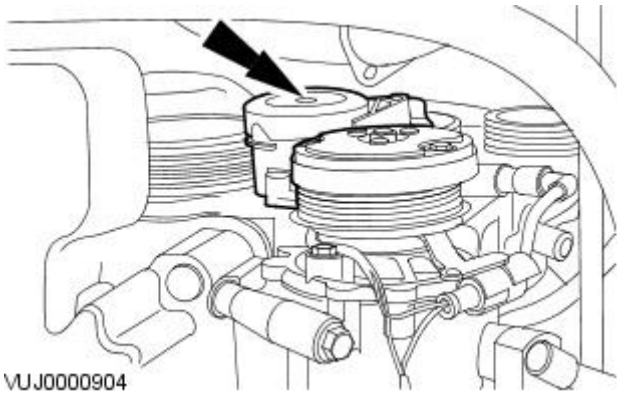


1. Remove the accessory drive belt.
   For additional information, refer to Accessory Drive Belt - 2.5L/3.0L in this section.
2. Remove the accessory drive belt tensioner.

## Installation

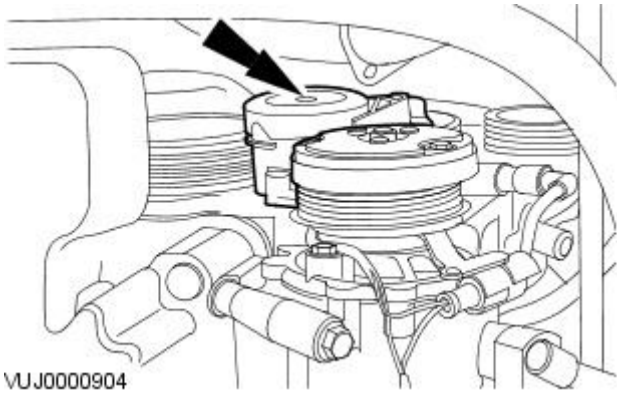


1. To install, reverse the removal procedure.
   - Tighten to 45 Nm.

GETtheMANUALS.org

# Accessory Drive - Accessory Drive Belt Tensioner2.7L V6 - TdV6

Removal and Installation

| Special Tool(s) | |
|---|---|
| 303-703 | Accessory belt detensioner.<br><br>303-703 |

## Removal

1. Disconnect the battery.
   For additional information, refer to: Battery Disconnect and Connect (414-01 Battery, Mounting and Cables, General Procedures).
2. Remove the air deflector.
   For additional information, refer to: Air Deflector (501-02 Front End Body Panels, Removal and Installation).
3. Detach the accessory drive belt.
   1. Using the special tool, rotate the accessory drive belt tensioner counter clockwise.
   2. Detach the accessory drive belt.

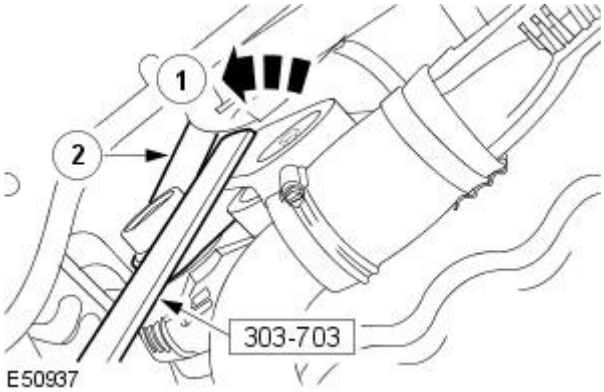


4. Remove the accessory drive belt tensioner.

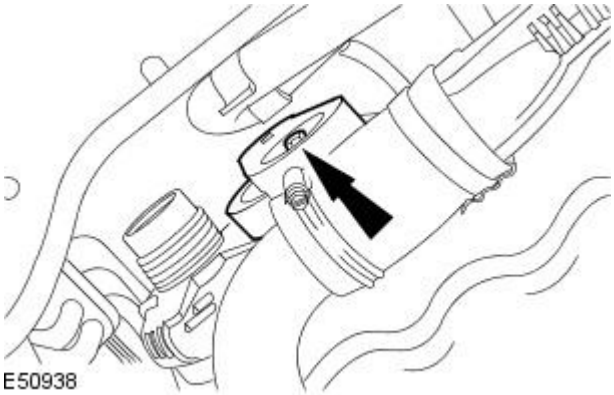


## Installation

1. To install, reverse the removal procedure.
   - Tighten to 47 Nm.

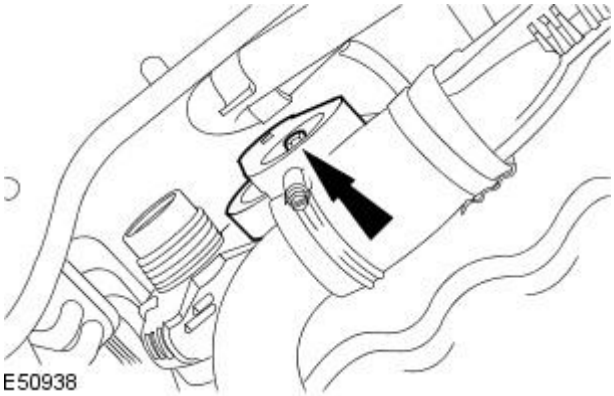


GETtheMANUALS.org

# Accessory Drive - Accessory Drive Belt TensionerV8 4.2L Petrol/V8 S/C 4.2L Petrol

Removal and Installation

## Removal

1. Disconnect the battery ground cable.
   For additional information, refer to: Battery Disconnect and Connect (414-01 Battery, Mounting and Cables, General Procedures).
2. Remove the air cleaner outlet pipe.
   For additional information, refer to: Air Cleaner Outlet Pipe (303-12B Intake Air Distribution and Filtering - V8 4.2L Petrol/V8 S/C 4.2L Petrol, Removal and Installation).
3. Detach the accessory drive belt.
   1. Rotate the accessory drive belt tensioner counter-clockwise.
      1. Use a 3/8 inch square drive bar to rotate the accessory drive belt tensioner.
   2. Detach the accessory drive belt.

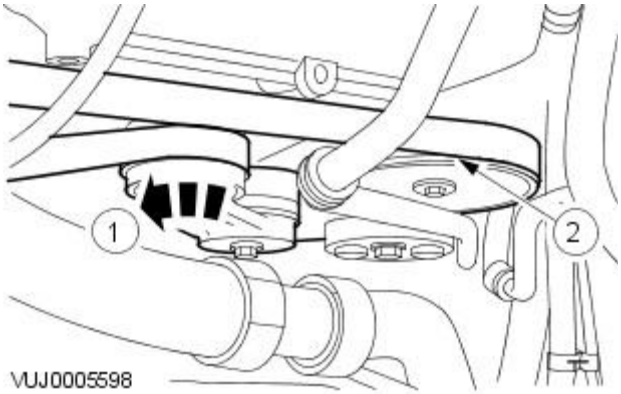


4. Remove the accessory drive belt tensioner.

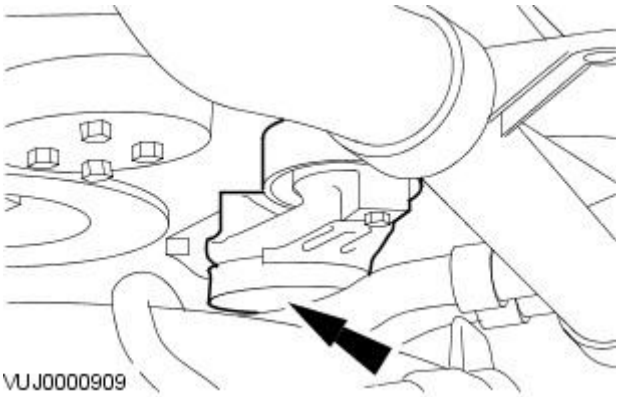


## Installation

1. To install, reverse the removal procedure.
   - Tighten to 40 Nm.

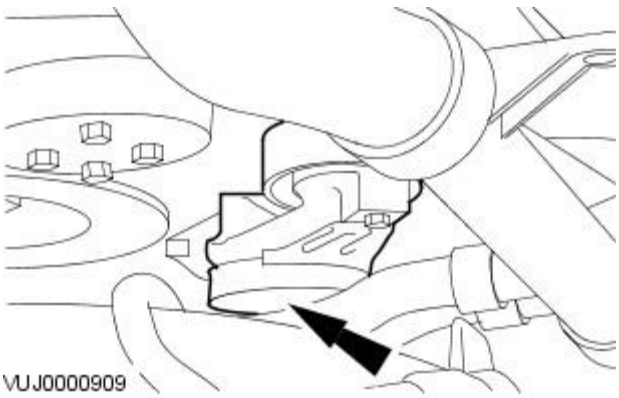


GETtheMANUALS.org

# Accessory Drive - Fuel Injection Pump Belt

Removal and Installation

## Removal

Right-hand drive vehicles

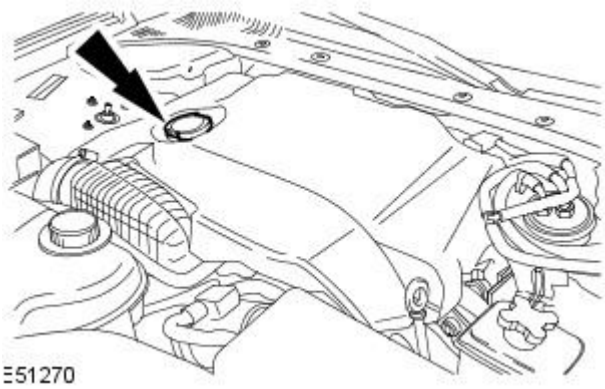


**1.** Remove the oil filler cap.

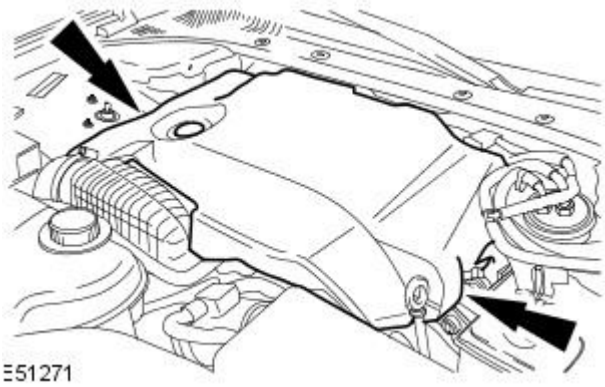


**2.** Remove the engine cover.

**3.** Remove the cabin air filter.
For additional information, refer to: Cabin Air Filter (412-01 Air Distribution and Filtering, Removal and Installation).

**4.** Remove the engine compartment support.

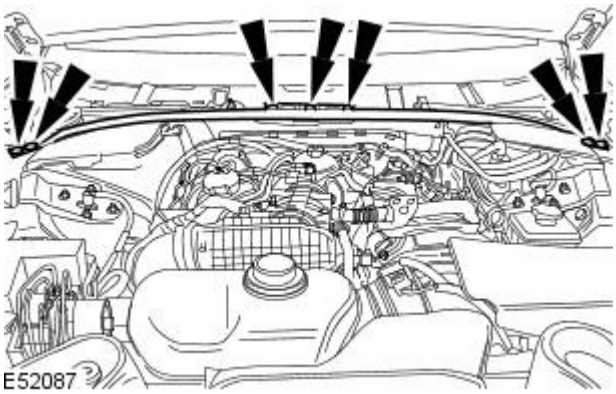


**5.** Remove the engine compartment access panel.

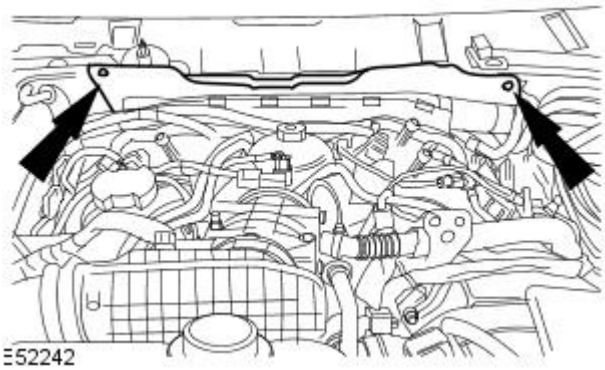


GETtheMANUALS.org

6. Remove the cabin air filter housing retaining nut.

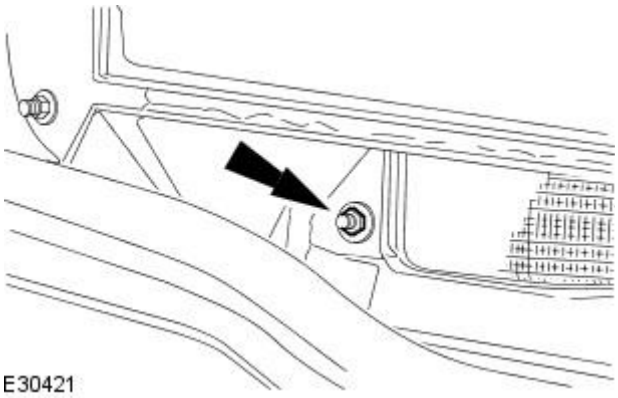


7. Remove the cabin air filter housing.

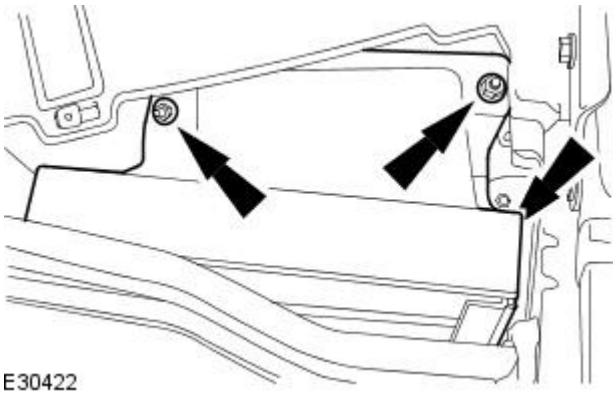


8. Remove the engine compartment panel.

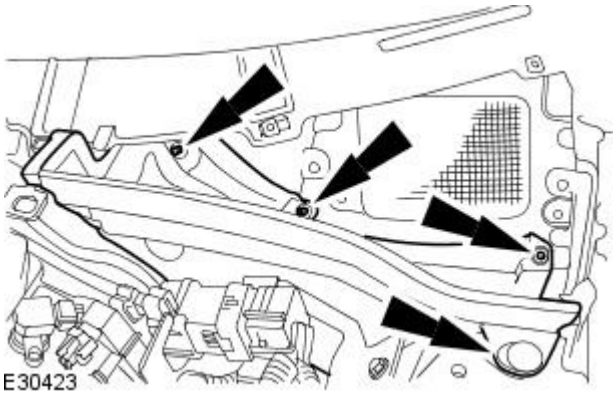


Left-hand drive vehicles

9. Remove the wiper mounting arm and pivot shaft.
   For additional information, refer to: Wiper Mounting Arm and Pivot Shaft (501-16 Wipers and Washers, Removal and Installation).

10. Remove the engine compartment access panel.

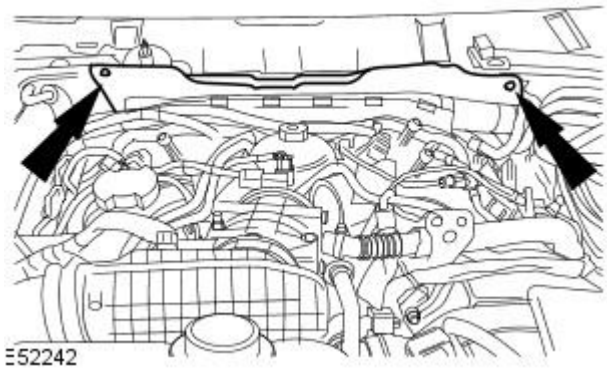


All vehicles

GETtheMANUALS.org

**11.** Remove the engine compartment access panel retaining strip.

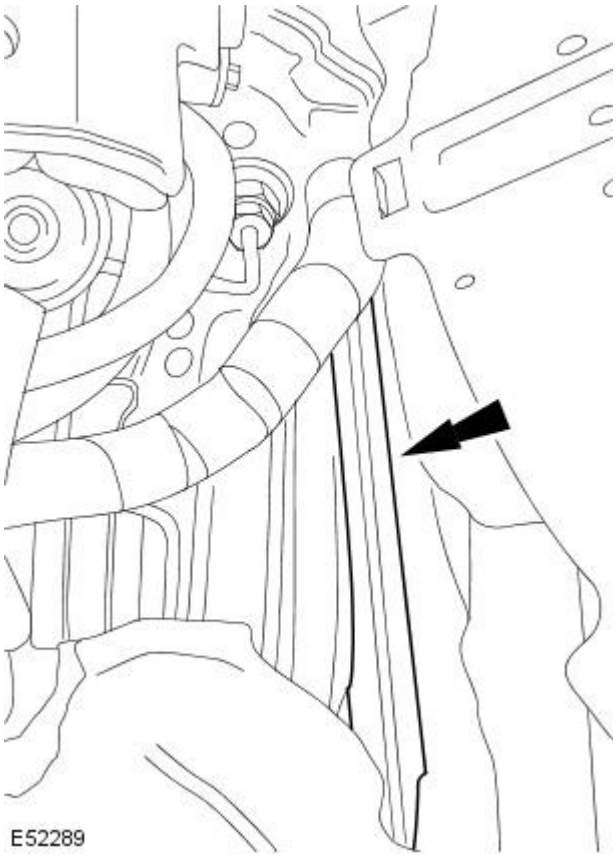


**12.** Remove the engine harness retaining bolts.

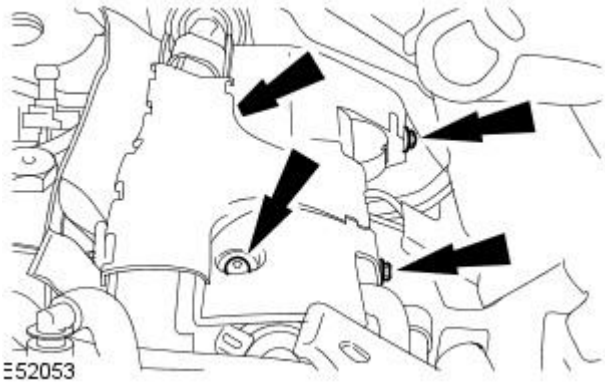


**13.** Remove the fuel injection pump belt cover.

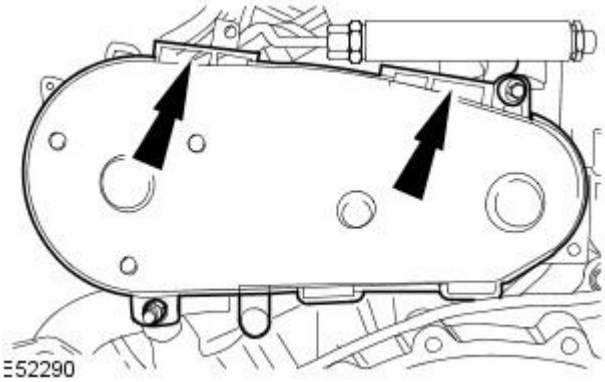


GETtheMANUALS.org

**14.** Cut off and discard the fuel injection pump belt.

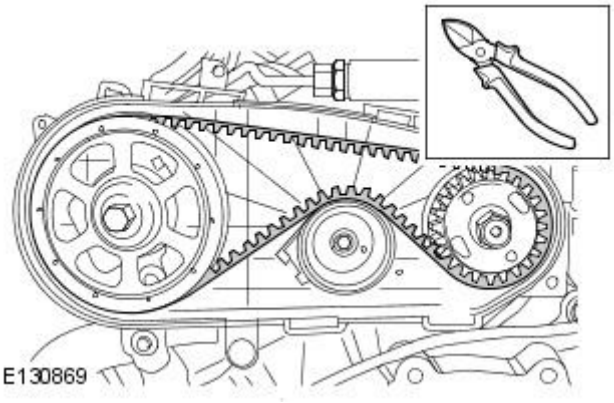


**15.** Remove and discard the fuel injection pump belt tensioner.

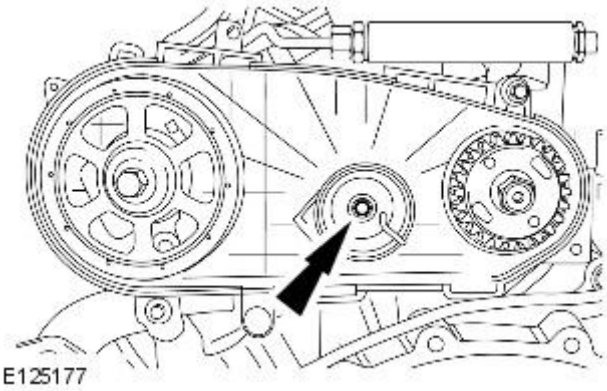


## Installation

All vehicles

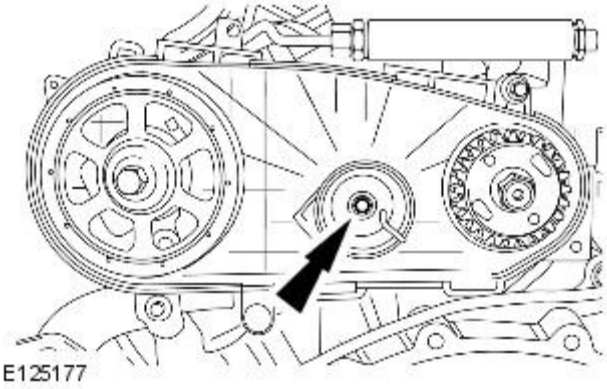


**1.** CAUTIONS:

Make sure the fuel injection pump belt tensioner is correctly located in to the fuel injection pump cover backplate. Failure to follow this instruction may result in damage to the components.

Make sure that the fuel injection pump belt tensioner tang is correctly located to the fuel injection pump belt rear cover. Failure to follow this instruction may result in damage to the engine.

• NOTE: Do not remove the fuel injection pump belt tensioner locking pin before installing the tensioner.

Install the fuel injection pump belt tensioner retaining bolt.

- Locate the tang on the new fuel injection pump belt tensioner in to the fuel injection pump cover backplate.
- Tighten to 25 Nm.

**2.** NOTE: Make sure the fuel injection pump belt is correctly seated on to the fuel injection pump drive pulleys.

Install a new fuel injection pump belt.

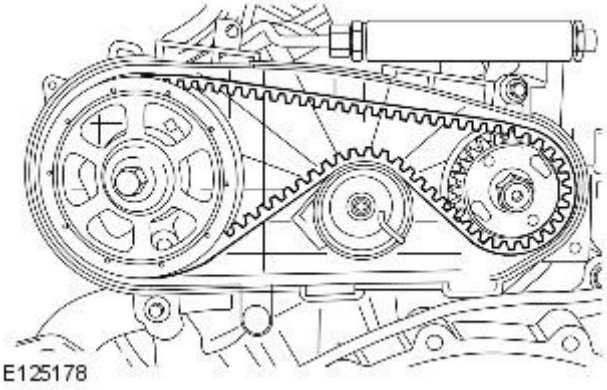


GETtheMANUALS.org

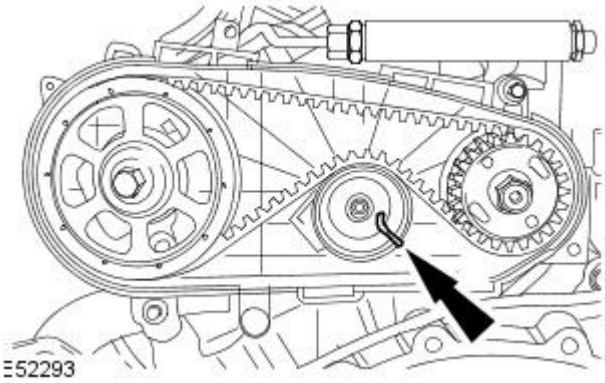


**3.** Remove and discard the fuel injection pump belt tensioner locking pin.

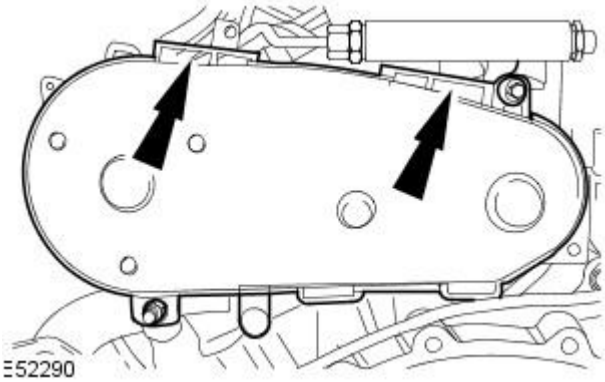


**4.** Install the fuel injection pump belt cover.

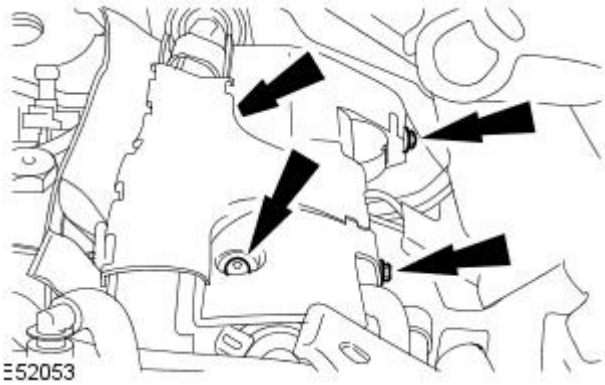


**5.** Install the engine harness retaining bolts.

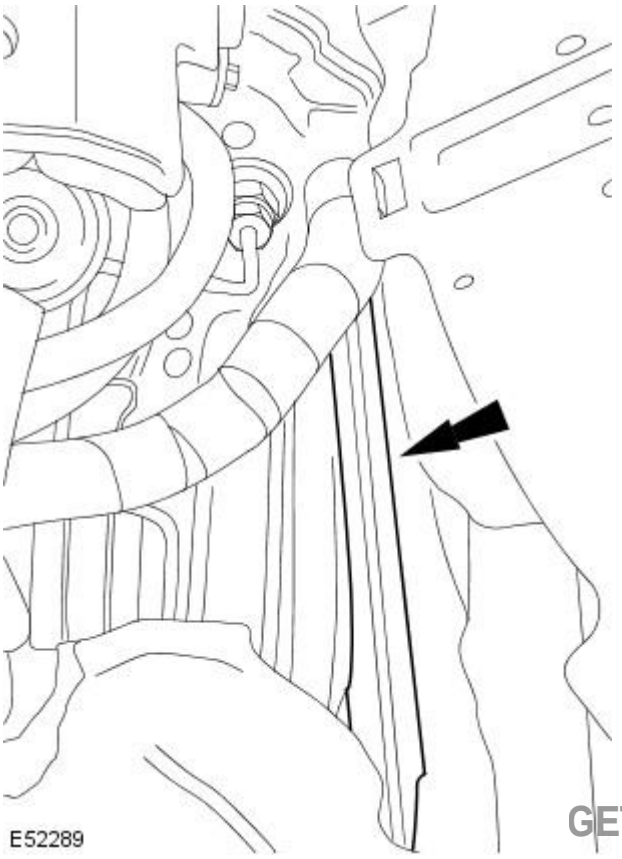


**6.** Install the engine compartment access panel retaining strip.

GETtheMANUALS.org

Left-hand drive vehicles

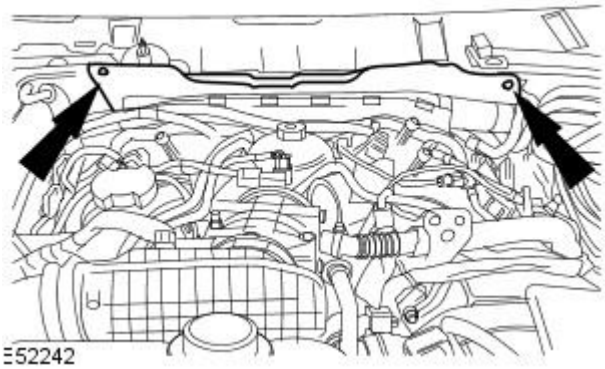


**7.** Install the engine compartment access panel.

**8.** Install the wiper mounting arm and pivot shaft.
For additional information, refer to: Wiper Mounting Arm and Pivot Shaft (501-16 Wipers and Washers, Removal and Installation).

Right-hand drive vehicles

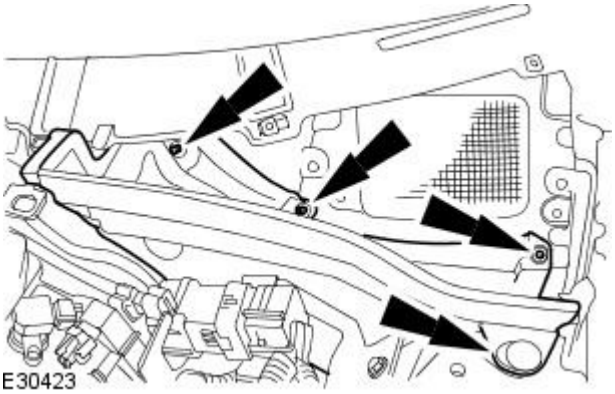


**9.** Install the engine compartment panel.

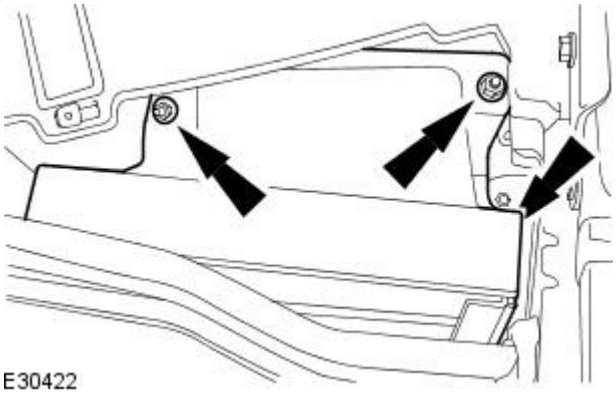


**10.** Install the cabin air filter housing.

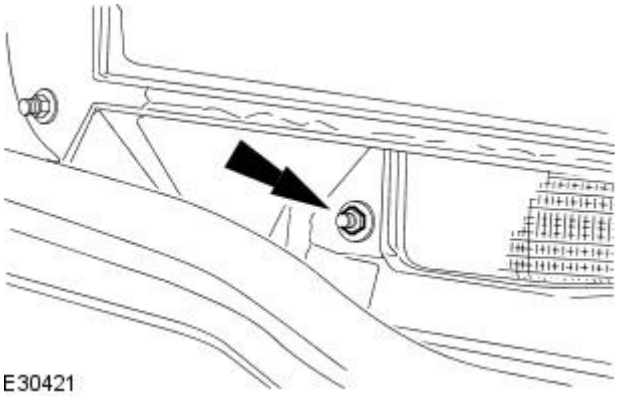


**11.** Install the cabin air filter housing retaining nut.

GETtheMANUALS.org

**12.** Install the engine compartment access panel.

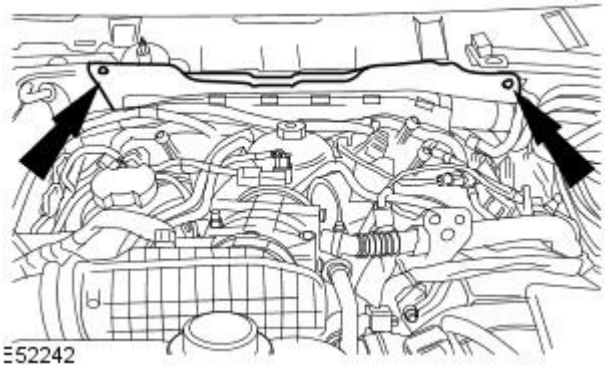


**13.** Install the engine compartment support.

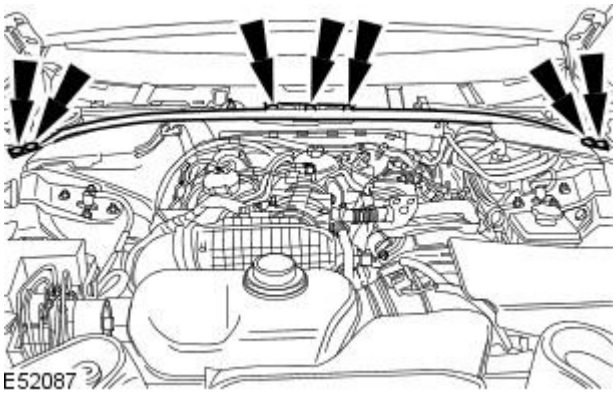


**14.** Install the cabin air filter.
For additional information, refer to: Cabin Air Filter (412-01 Air Distribution and Filtering, Removal and Installation).

**15.** Install the engine cover.

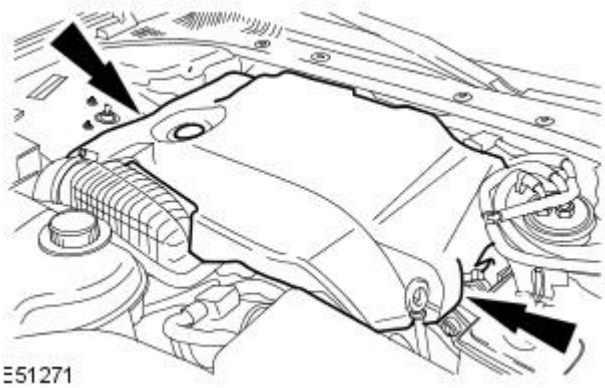


**16.** Install the oil filler cap.

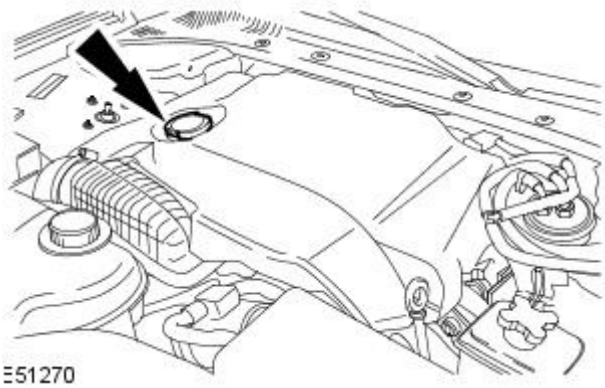


GETtheMANUALS.org

# Accessory Drive - Fuel Injection Pump Pulley

Removal and Installation

| Special Tool(s) | |
|---|---|
| 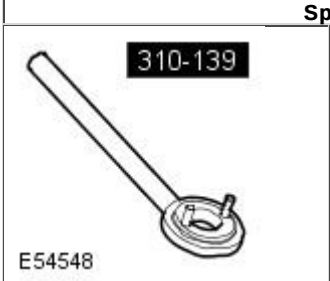  | Holder - Fuel Pump Pulley<br><br>310-139 |
| 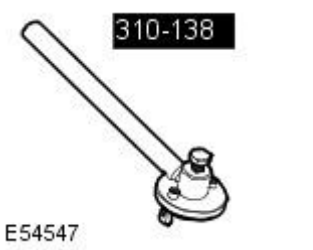  | Reaction Arm - Fuel Pump Pulley<br><br>310-138 |

## Removal

1. Disconnect the battery ground cable.
   For additional information, refer to: Battery Disconnect and Connect (414-01, General Procedures).
2. Remove the fuel injection pump belt.
   For additional information, refer to: Fuel Injection Pump Belt (303-05, Removal and Installation).
3. Using the special tool, remove the fuel injection pump pulley retaining nut.
   - Using the special tool, retain the fuel injection pump pulley.
   - Remove the special tool.

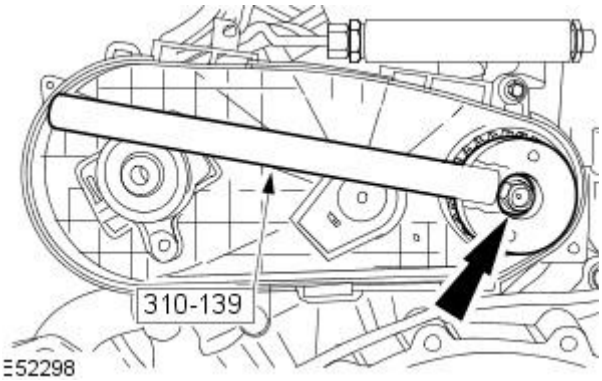


4. Using the special tool, remove the fuel injection pump pulley.
   - Remove the special tool.

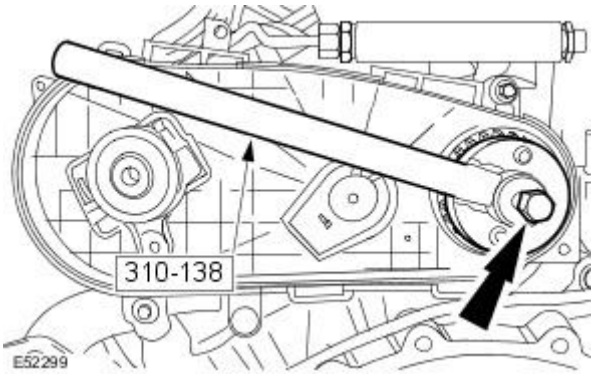


## Installation

GETtheMANUALS.org

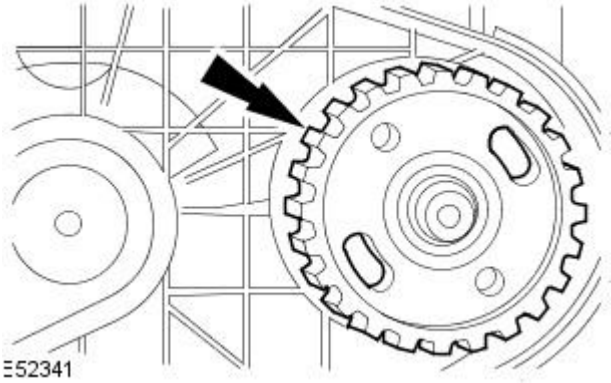


**1.** Install the fuel injection pump pulley.

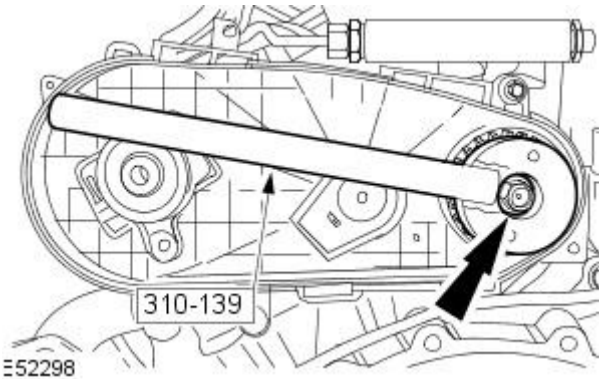


**2.** Install the retaining nut.

- Tighten to 50 Nm.

**3.** Install the fuel injection pump belt.
For additional information, refer to: Fuel Injection Pump Belt (303-05, Removal and Installation).

**4.** Connect the battery ground cable.
For additional information, refer to: Battery Disconnect and Connect (414-01, General Procedures).

GETtheMANUALS.org

# Accessory Drive - Supercharger Belt

Removal and Installation

## Removal

1. Disconnect the battery ground cable.
   For additional information, refer to: Battery Disconnect (414-01, General Procedures).
2. Remove the air cleaner outlet pipe.
   For additional information, refer to: Air Cleaner Outlet Pipe (303-12B, Removal and Installation).
3. Detach the supercharger belt.
   - Use a 1/2 inch square drive bar to rotate the supercharger belt tensioner.
     1. Detach the supercharger belt.

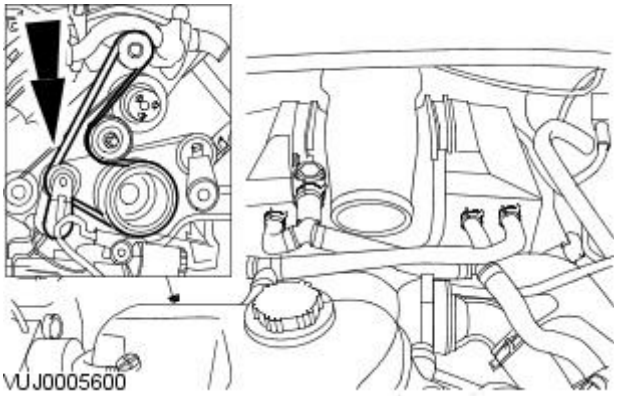


4. Remove the air deflector.
   For additional information, refer to: Air Deflector (501-02, Removal and Installation).
5. Reposition the supercharger belt tensioner.
   - Loosen the supercharger belt tensioner retaining bolt.
   - Reposition the supercharger belt tensioner.

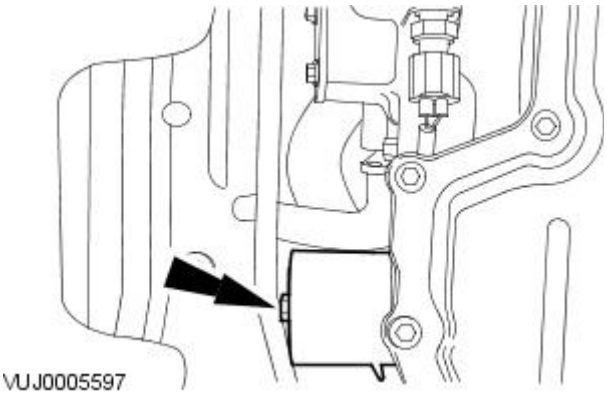


6. Lower the vehicle.
7. Remove the supercharger belt.

## Installation

1. To install, reverse the removal procedure.
   - Tighten to 40 Nm.

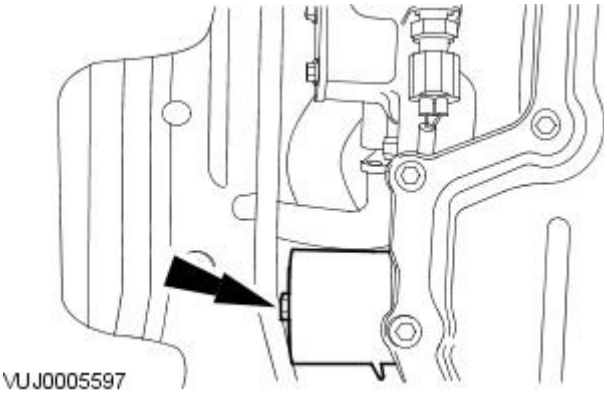


GETtheMANUALS.org

# Accessory Drive - Supercharger Belt Idler Pulley

Removal and Installation

## Removal

1. Disconnect the battery ground cable.
   For additional information, refer to: Battery Disconnect and Connect (414-01 Battery, Mounting and Cables, General Procedures).
2. Remove the air cleaner outlet pipe.
   For additional information, refer to: Air Cleaner Outlet Pipe (303-12B Intake Air Distribution and Filtering - V8 4.2L Petrol/V8 S/C 4.2L Petrol, Removal and Installation).
3. Detach the supercharger belt.
   - Use a 1/2 inch square drive bar to rotate the supercharger belt tensioner.

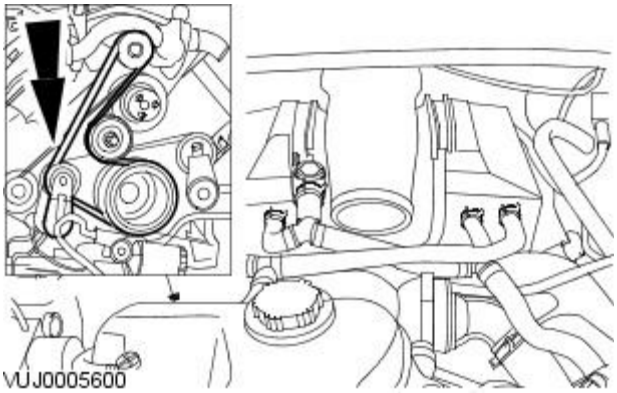


4. Remove the supercharger belt idler pulley.

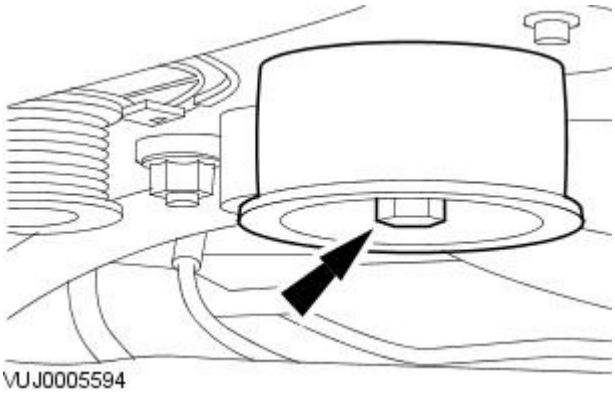


## Installation

1. To install, reverse the removal procedure.
   - Tighten to 40 Nm.

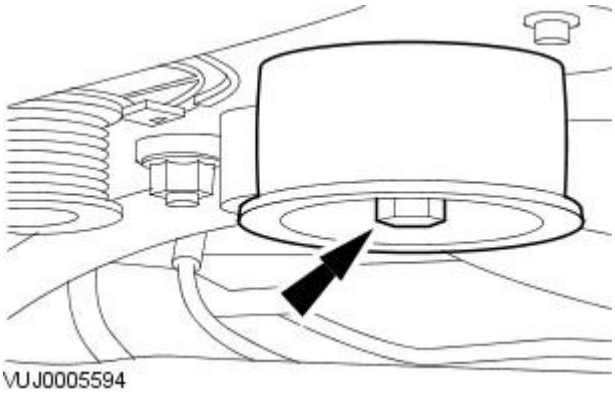


GETtheMANUALS.org

# Accessory Drive - Supercharger Belt Tensioner

Removal and Installation

## Removal

1. Disconnect the battery ground cable.
   For additional information, refer to: Battery Disconnect and Connect (414-01 Battery, Mounting and Cables, General Procedures).
2. Remove the air cleaner outlet pipe.
   For additional information, refer to: Air Cleaner Outlet Pipe (303-12B Intake Air Distribution and Filtering - V8 4.2L Petrol/V8 S/C 4.2L Petrol, Removal and Installation).
3. Detach the supercharger belt.
   - Use a 1/2 inch square drive bar to rotate the supercharger belt tensioner.
   - Detach the supercharger belt.

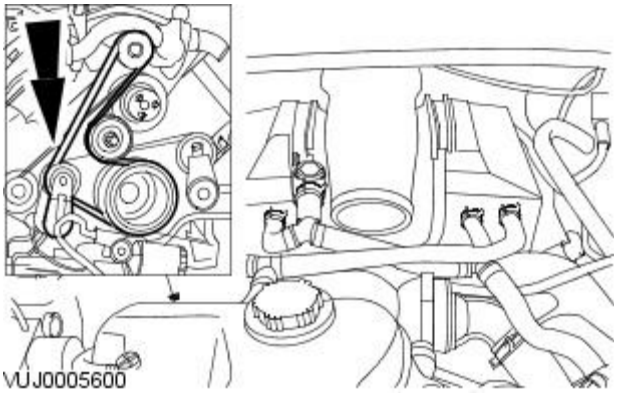


4. Remove the air deflector.
   For additional information, refer to: Air Deflector (501-02 Front End Body Panels, Removal and Installation).
5. NOTE: Remove and discard the oil cooler pipe O-ring seal.

   Detach the oil cooler pipe from the oil filter adaptor.

   1. Remove the the oil cooler pipe retaining bolt.
   2. Detach the oil cooler pipe from the oil filter adaptor.

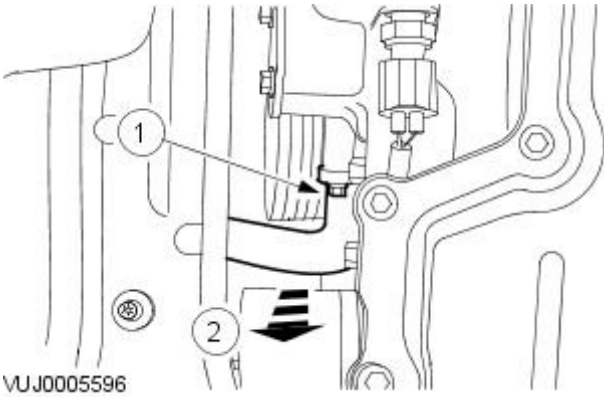


6. Remove the supercharger belt tensioner.

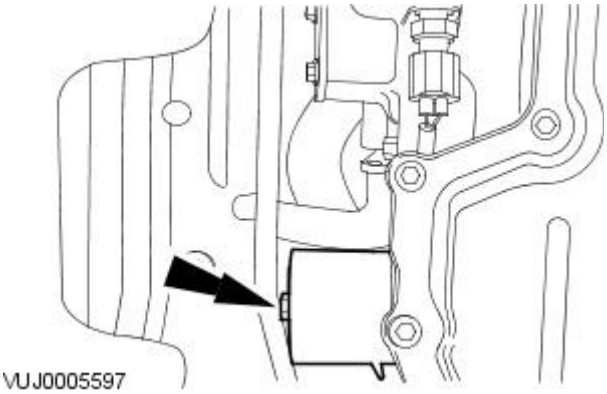


## Installation

GETtheMANUALS.org

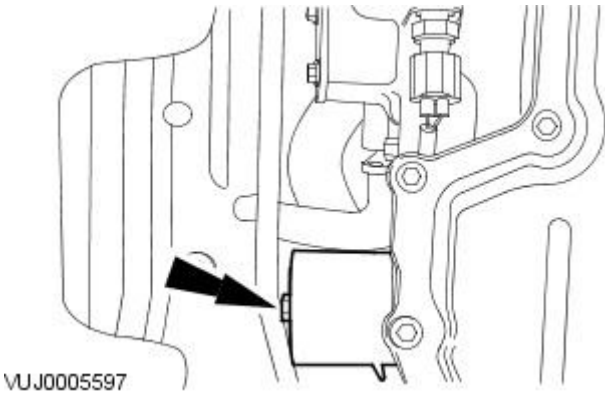


**1.** NOTE: Install a new O-ring seal to oil cooler pipe.

To install, reverse the removal procedure.

- Tighten to 40 Nm.

GETtheMANUALS.org

# Starting System -

**Torque Specifications**

| Description | Nm | lb-ft | lb-in |
|---|---|---|---|
| Starter motor bolts - vehicles fitted with 2.5L or 3.0L engine | 25 | 18 | - |
| Starter motor bolts - vehicles fitted with 2.7L Diesel engine | 48 | 35 | - |
| Starter motor bolts - vehicles fitted with 4.2L engine | 45 | 33 | - |
| Battery positive terminal integral connector retaining nut - vehicles fitted with 2.5L, 2.7L Diesel or 3.0L engine | 13 | 10 | - |
| Battery positive terminal integral connector retaining nut - vehicles fitted with 4.2L engine | 10 | - | 89 |
| Solenoid terminal integral connector nut | 7 | - | 62 |

GETtheMANUALS.org

# Starting System - Starting System

Description and Operation

The function of the starting system is to crank the engine fast enough to allow the engine to start. Heavy cables, connectors and switches are used in the system because of the large currents required.

The starting system consists of a pre-engaged type starter motor, battery, remote control switch (ignition switch) and relay. When the starter is operated from the ignition switch, the engagement lever moves the pinion into mesh with the engine ring gear teeth, the electrical contacts within the solenoid complete the high power circuit and the starter motor operates to turn the engine.

Vehicles equipped with automatic transmission have a transmission range sensor attached to the circuit which prevents operation of the starter motor unless NEUTRAL or PARK are selected.

The sequence of operation is as follows:

- Ignition switch in the start position III.
- Starter relay activated.
- Voltage provided to the starter motor solenoid.
- Starter solenoid engages the drive pinion to the flywheel or flexiplate.
- Starter solenoid switches the battery current to the starter motor.
- System remains engaged until the ignition switch is returned to the run position.

GETtheMANUALS.org

# Starting System - Starting System

Diagnosis and Testing

1. **1.** Verify the customer concern by operating the system.
2. **2.** Visually inspect for obvious signs of mechanical and electrical damage.

**Visual Inspection Chart**

| Mechanical | Electrical |
|---|---|
| ● Starter Motor.<br>● Battery. | ● Fuse 27 (30A) Front power distribution box<br>● Fuse 1 (5A) Primary junction box<br>● Starter relay.<br>● Fuse 15 (5A) Primary junction box<br>● Transmission control module (TCM)<br>● Engine control module (ECM)<br>● Wiring harness(es).<br>● Damaged, loose or corroded connectors |

3. **3.** If an obvious cause for an observed or reported concern is found, correct the cause (if possible) before proceeding to the next step.
4. **4.** If the concern is not visually evident, verify the symptom and refer to the Symptom Chart.

**Symptom Chart**

| Symptom | Possible Sources | Action |
|---|---|---|
| The engine does not crank | * Battery<br>* Starter motor<br>* Starter relay<br>* Ignition switch<br>* Transmission control module (TCM)<br>* ECM | * GO to Pinpoint Test A |
| Engine cranks slowly | * Battery<br>* Circuitry<br>* Starter motor | * GO to Pinpoint Test B |
| Unusual starter motor noise | * Starter motor<br>* Flywheel ring gear | * CHECK flywheel or flexiplate. For additional information, refer to Section 303-00 Engine System - General Information<br>- INSPECT starter motor for alignment, cracked case. Make sure the mounting bolts are tightened. If necessary, INSTALL a new starter motor. |
| The starter spins but the engine does not crank | * Starter motor | * INSPECT the flywheel or flexiplate for missing teeth. CHECK starter motor for correct mounting. If concern persists, INSTALL a new starter motor. |

| PINPOINT TEST A : THE ENGINE DOES NOT CRANK | |
|---|---|
| **TEST CONDITIONS** | **DETAILS/RESULTS/ACTIONS** |
| **A1: CHECK THE BATTERY** | |
| | 1 Check the battery. For additional information, refer to Section 414-00 Battery and Charging System - General Information |
| | Is the battery OK?<br>**Yes**<br>GO to A2.<br>**No**<br>INSTALL a new battery. TEST the system for normal operation. |
| **A2: CHECK THE STARTER RELAY** | |
| | 1 Turn the ignition switch to the RUN position. |
| | Does the starter relay make an audible click?<br>**Yes**<br>GO to A3.<br>**No**<br>GO to A7. |
| **A3: CHECK THE STARTER FOR BATTERY VOLTAGE** | |
| | 1 Measure the voltage between the starter connector ST8 (R) and ground. |
| | Is the voltage greater than 10 volts?<br>**Yes**<br>GO to A4.<br>**No**<br>Repair the starter motor permanent live supply circuit. TEST the system for normal operation. |
| **A4: CHECK THE STARTER GROUND** | |
| | 1 Measure the resistance between starter outer casing and ground. |
| | Is the resistance less than 2 Ohm?<br>**Yes**<br>GO to A5.<br>**No**<br>REPAIR starter ground cable or connections. TEST the system for normal operation |
| **A5: CHECK THE STARTER SWITCH LIVE** | |
| | 1 While ignition switch is in the RUN position measure the voltage between starter connector ST5 and ground. |
| | Is the voltage greater than 10 volts?<br>**Yes**<br>INSTALL a new starter motor. TEST the system for normal operation.<br>**No**<br>GO to A6. |
| **A6: CHECK THE PERMANENT LIVE VOLTAGE TO STARTER RELAY** | |
| | 1 Remove the starter relay. Measure the voltage between connector 30 and ground. |

GETtheMANUALS.org

| | |
|---|---|
| | Is the voltage greater than 10 volts?<br>**Yes**<br>REPAIR starter switch live circuit from the starter relay to the starter. TEST the system for normal operation.<br>**No**<br>CHECK fuse 27 (30A) in the front PDB. If fuse OK REPAIR starter relay permanent live supply circuit. TEST the system for normal operation. |
| **A7: CHECK FOR IGNITION VOLTAGE TO STARTER RELAY** | |
| | 1 Remove the starter relay. Measure the voltage between connector 86 and ground. |
| | Is the voltage greater than 10 volts?<br>**Yes**<br>GO to A8.<br>**No**<br>GO to A10. |
| **A8: CHECK GROUND SUPPLY TO STARTER RELAY** | |
| | 1 Measure the resistance between starter relay connector 85 and ground. |
| | Is the resistance less than 5 ohms?<br>**Yes**<br>INSTALL a new starter relay.<br>**No**<br>GO to A9. |
| **A9: CHECK GROUND SUPPLY CIRCUIT** | |
| | 1 Measure the resistance between starter relay connector 85 and ECM electrical connector PI1 pin 41 (GO) |
| | Is the resistance less than 5 ohms?<br>**Yes**<br>DIAGNOSE the anti-theft system. For additional information, refer to Section 419-01A Anti-Theft - ActiveSection 419-01B Anti-Theft - Passive<br>**No**<br>REPAIR the ground circuit between starter relay and ECM. |
| **A10: CHECK FUSE 1 IN THE PRIMARY JUNCTION BOX** | |
| | 1 Check the fuse. |
| | Is the fuse OK?<br>**Yes**<br>For vehicles with manual transmission REPAIR the circuit between primary junction box and starter relay. For vehicles with automatic transmission GO to A12.<br>**No**<br>GO to A11. |
| **A11: CHECK FOR SHORT TO GROUND** | |
| | 1 Measure the resistance between starter relay connector 86 and ground. |
| | Is the resistance greater than 10,000 ohms?<br>**Yes**<br>INSTALL a new fuse.<br>**No**<br>REPAIR short to ground between primary junction box and starter relay. TEST system for normal operation. |
| **A12: CHECK FOR CONTINUITY BETWEEN PRIMARY JUNCTION FUSE BOX AND ECM** | |
| | 1 Disconnect primary junction fuse box electrical connector FH53 and power train control module electrical connector PI1 |
| | 2 Check the resistance between FH53 pin 3 (Y) and PI1 pin 6 (Y). |
| | Is the resistance less the 5 ohms?<br>**Yes**<br>GO to A13.<br>**No**<br>REPAIR the circuit between the primary junction fuse box and the power train control module. TEST system for normal operation. |
| **A13: CHECK FUSE 15 IN THE PRIMARY JUNCTION FUSE BOX** | |
| | 1 Check the fuse |
| | Is the fuse OK?<br>**Yes**<br>GO to A15.<br>**No**<br>GO to A14. |
| **A14: CHECK FOR SHORT TO GROUND** | |
| CAUTION: Many components on the vehicle are sensitive to electrostatic discharge. Use of an anti-static strap and mat is recommended. | |
| | 1 Disconnect the primary junction fuse box electrical connector CA2 and transmission control module (TCM) GB2. |
| | 2 Measure the resistance primary junction fuse box electrical connector CA2 pin 1 (GO) and ground. |
| | Is the resistance greater than 10,000 ohms?<br>**Yes**<br>INSTALL a new fuse.<br>**No**<br>REPAIR short to ground between primary junction fuse box and TCM. INSTALL a new fuse. TEST system for normal operation. |
| **A15: CHECK FOR IGNITION VOLTAGE AT TCM** | |
| | 1 Connect the primary junction fuse box electrical connector CA2 |
| | 2 Turn the ignition switch to the RUN position. |
| | 3 Measure the voltage between TCM electrical connector GB2 pin 9 (GO) and ground |
| | Is the voltage greater than 10 volts?<br>**Yes**<br>GO to A16.<br>**No**<br>REPAIR the circuit between TCM and primary junction fuse box. TEST system for normal operation. |
| **A16: CHECK FOR CONTINUITY BETWEEN TCM ELECTRICAL CONNECTOR GB2 AND ECM ELECTRICAL CONNECTOR PI1** | |
| | 1 Check the resistance between GB2 pin 1O (GR) and PI1 pin 31 (GR). |
| | Is the resistance less the 5 ohms?<br>**Yes**<br>INSTALL a new ECM. For additional information refer to Dealer Technical Support. TEST the system for normal operation. If fault is repeated INSTALL a new TCM. |

GETtheMANUALS.org

| | |
|---|---|
| | **No**<br>REPAIR the circuit between TCM and primary junction fuse box. TEST system for normal operation. |

| **PINPOINT TEST B : THE ENGINE CRANKS SLOWLY** | |
|---|---|
| **TEST CONDITIONS** | **DETAILS/RESULTS/ACTIONS** |
| **B1: CHECK FOR VOLTAGE DROP** | |
| | 1 Measure the voltage between the starter motor permanent voltage supply terminal and the positive battery terminal with the ignition key in the START position. |
| | Is the voltage greater than 10 volts?<br>**Yes**<br>GO to B2.<br>**No**<br>CLEAN and TIGHTEN all positive battery cable connections. TEST the system for normal operation. If the concern persists, INSTALL a new positive battery cable. |
| **B2: CHECK FOR GROUND CONNECTION** | |
| | 1 Measure the voltage between the starter motor case and battery negative terminal with the ignition key in the START position. |
| | Is the voltage less than 0.5 volts?<br>**Yes**<br>DIAGNOSE the battery and charging system. For additional information, refer to Section 414-00 Battery and Charging System - General Information<br>**No**<br>CLEAN and TIGHTEN all negative battery cable connections, starter motor mounting and body to engine ground strap. TEST the system for normal operation. If the concern persists, INSTALL a new negative battery cable. |

GETtheMANUALS.org

# Starting System - Starter MotorV8 4.2L Petrol/V8 S/C 4.2L Petrol/2.5L NA V6 - AJV6/3.0L NA V6 - AJ27

Removal and Installation

All vehicles

1. Disconnect the battery ground cable.
   For additional information, refer to Section 414-01 Battery, Mounting and Cables.
2. Remove the air deflector.
   For additional information, refer to Section 501-02 Front End Body Panels.
3. Disconnect the engine ground cable.

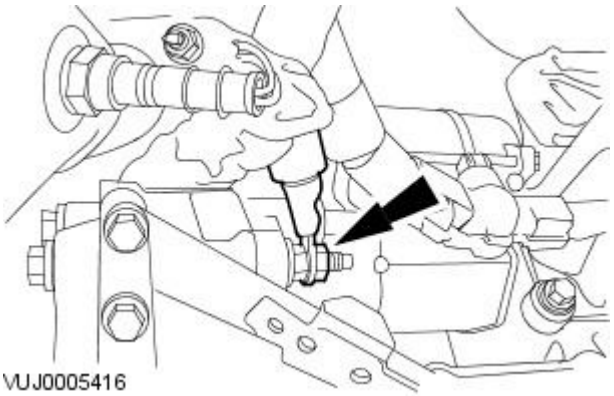


Vehicles fitted with 4.2L engine

4. Remove the starter motor positive cable cover.

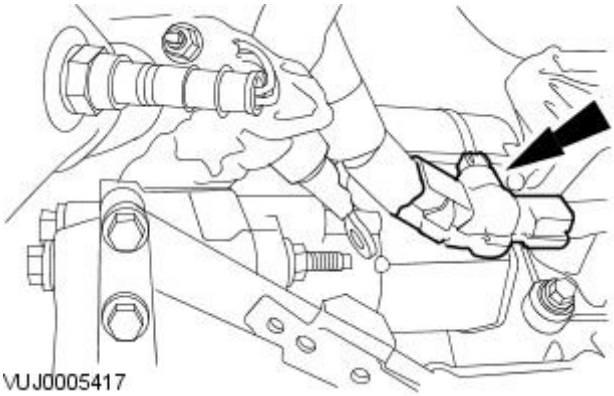


5. Detach the starter motor positive cable.

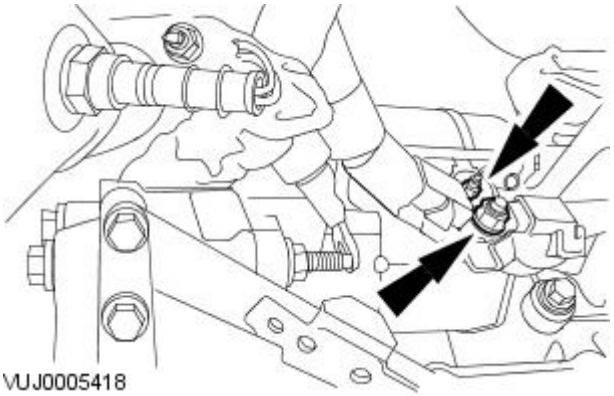


6. Remove the starter motor.
   1. Remove the starter motor retaining bolts.
   2. Remove the starter motor.

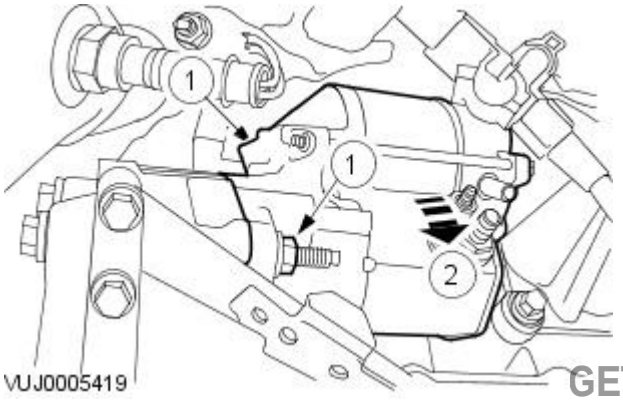


GETtheMANUALS.org

Vehicles fitted with 2.5L or 3.0L engine

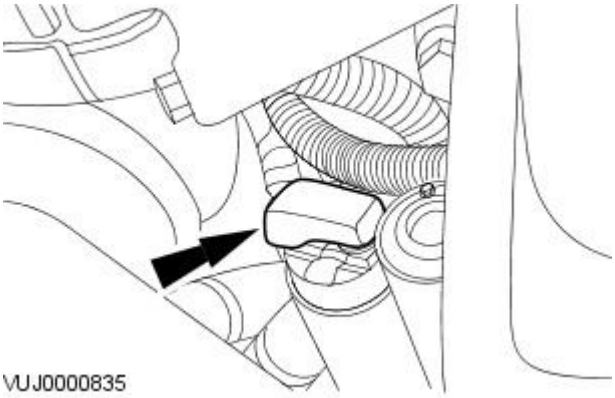


**7.** Remove the starter motor positive cable cover.

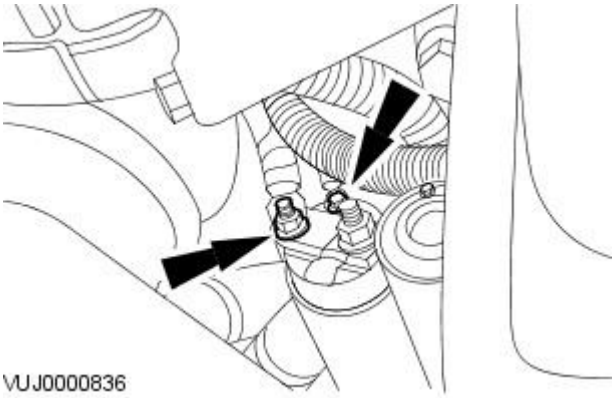


**8.** Detach the starter motor positive cables.

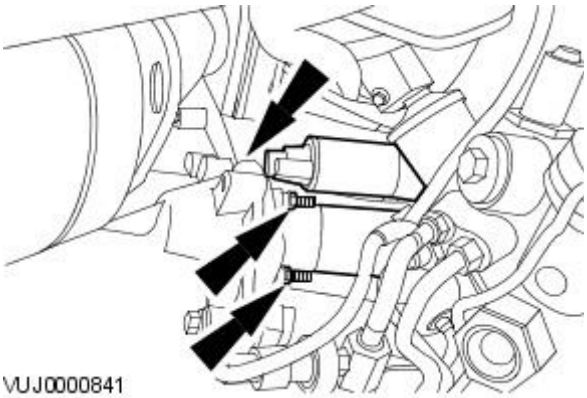


**9.** Remove the starter motor.

## Installation

Vehicles with 2.5L or 3.0L engine

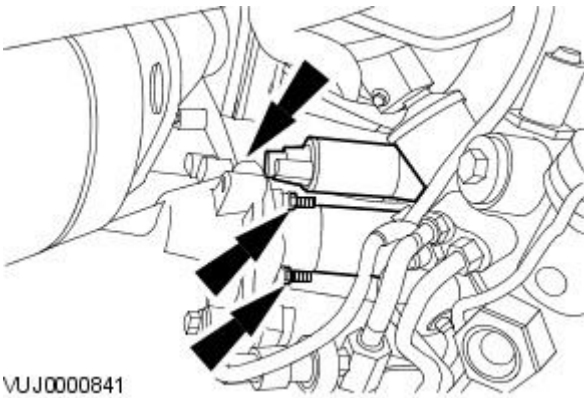


**1.** To install, reverse the removal procedure.

- Tighten to 25Nm

GETtheMANUALS.org

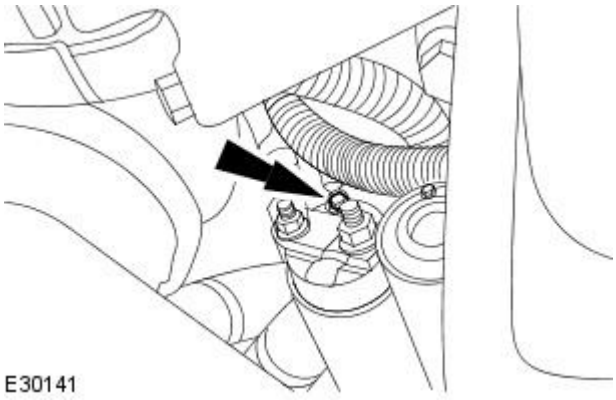


**2.** Tighten to 7 Nm.

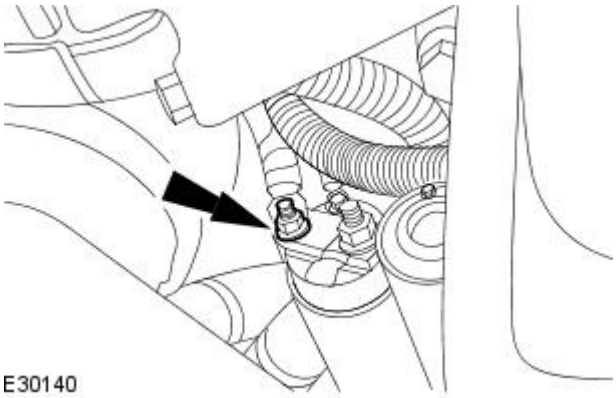


**3.** Tighten to 13 Nm.

Vehicles with 4.2L engine

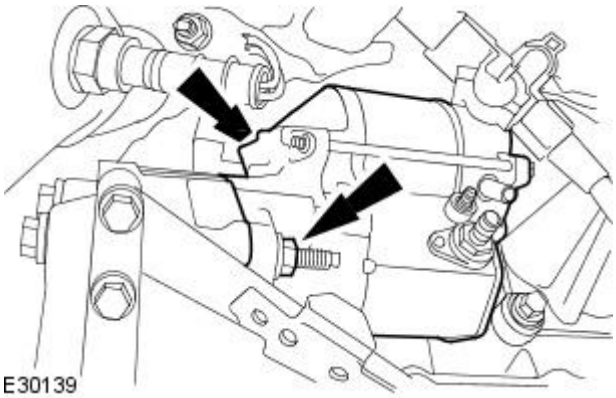


**4.** Tighten to 45 Nm.

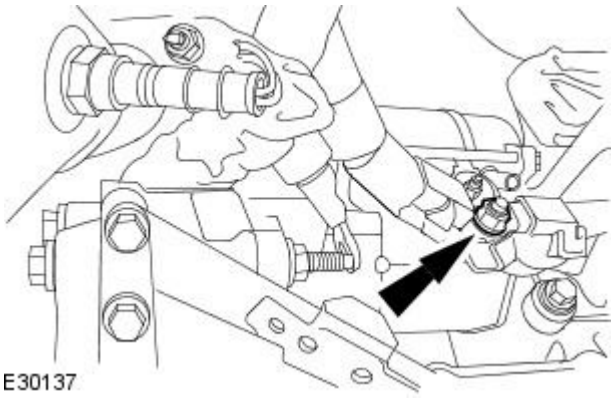


**5.** Tighten to 10 Nm.

GETtheMANUALS.org

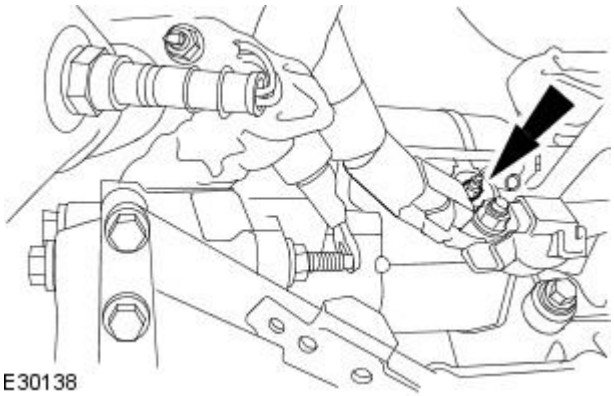


**6.** Tighten to 7 Nm.

GETtheMANUALS.org

# Starting System - Starter Motor2.7L V6 - TdV6

Removal and Installation

## Removal

1. Disconnect the battery.
   For additional information, refer to: Battery Disconnect and Connect (414-01 Battery, Mounting and Cables, General Procedures).
2. Remove the air deflector.
   For additional information, refer to: Air Deflector (501-02 Front End Body Panels, Removal and Installation).
3. Make sure the alignment mark on the steering pinion seal protection cover is central to the steering gear pinion casting.

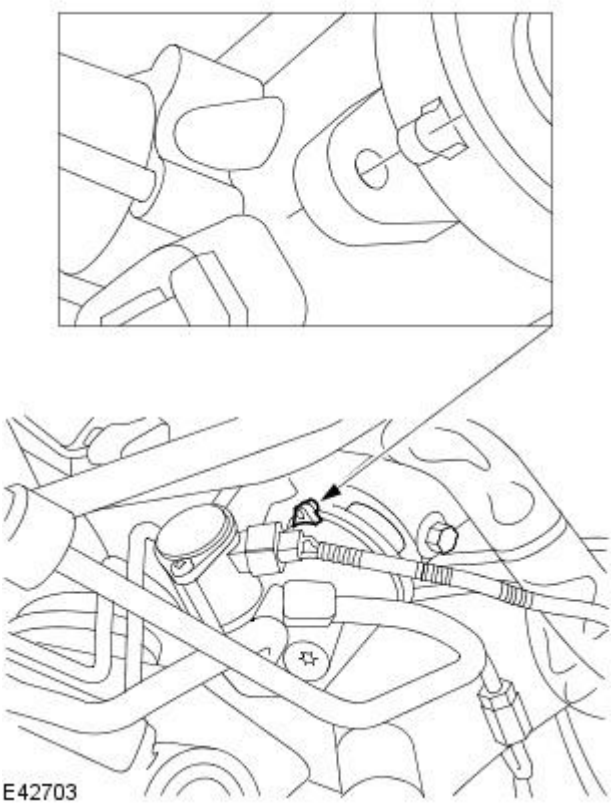


4. Remove the steering gear shaft pinch bolt.

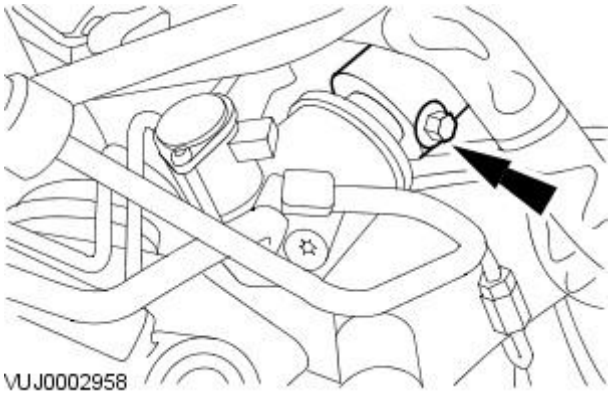


5. Detach the steering gear.

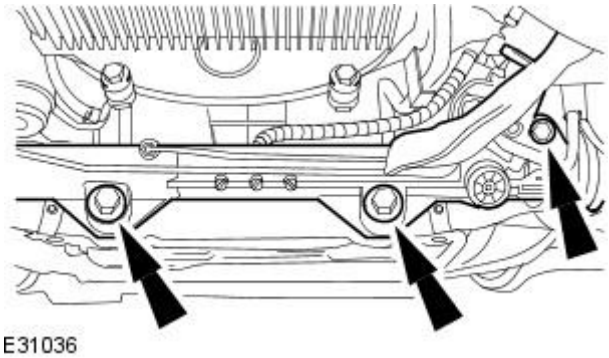


GETtheMANUALS.org

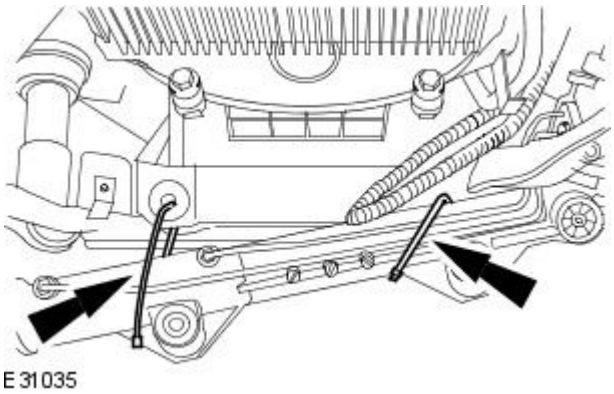


**6.** Secure the steering gear.

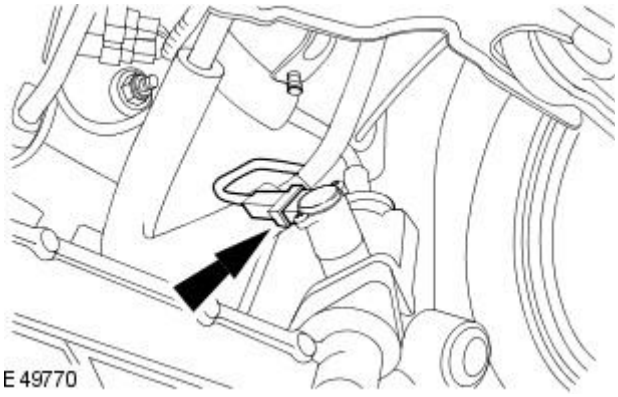


**7.** Disconnect the power steering control valve actuator electrical connector.

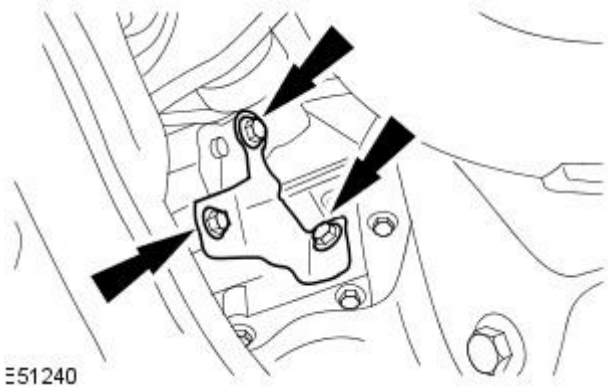


**8.** Remove the starter motor retaining bracket.

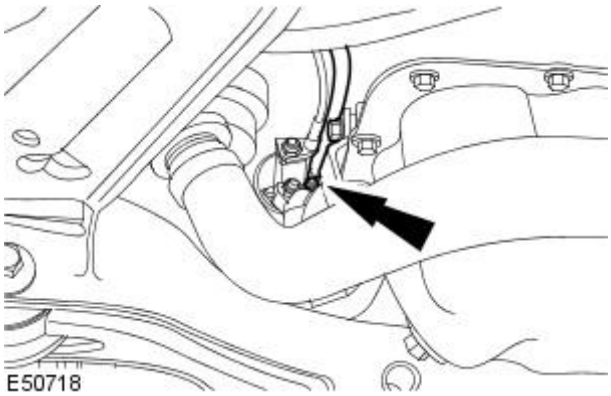


**9.** Detach the starter motor solenoid harness.

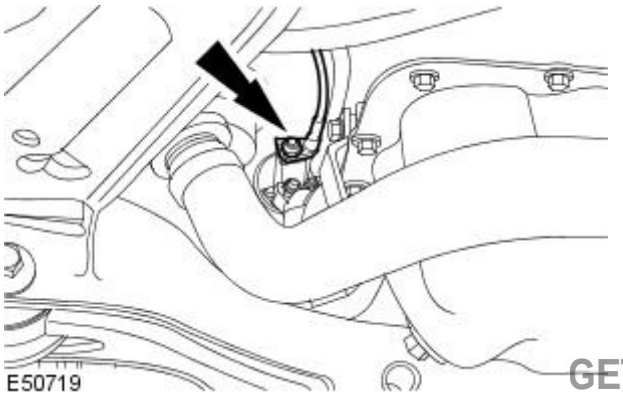


**10.** Detach the starter motor cable.

GETtheMANUALS.org

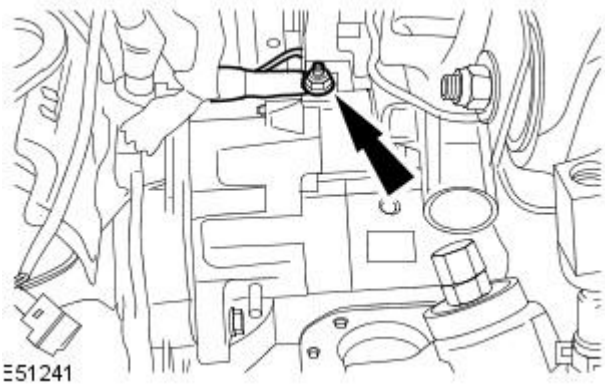


**11.** Detach the starter motor solenoid harness.

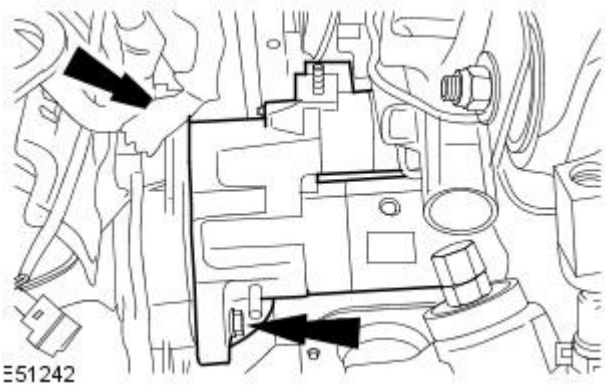


**12.** Remove the starter motor.

## Installation

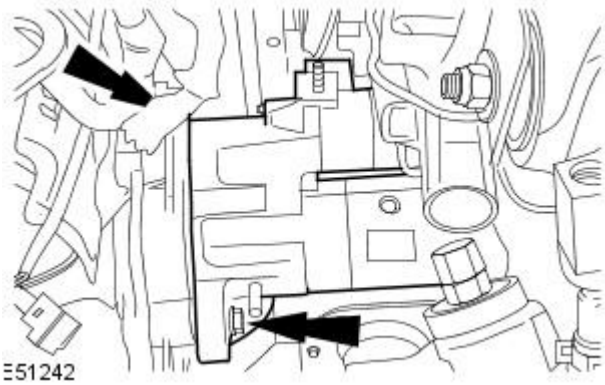


**1.** To install, reverse the removal procedure.

- Tighten to 48 Nm.

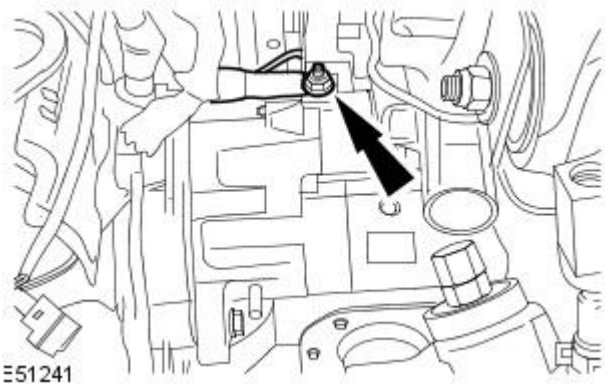


**2.** Tighten to 10 Nm.

GETtheMANUALS.org

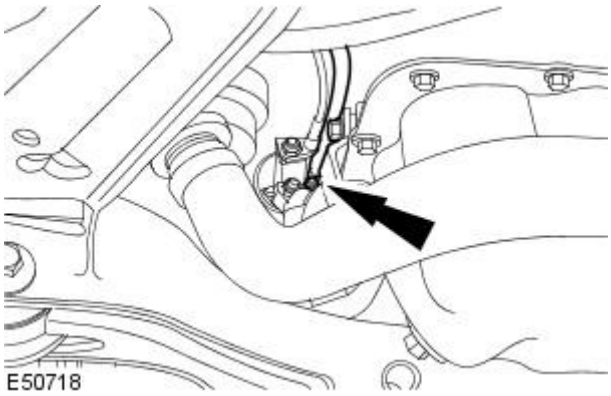


**3.** Tighten to 7 Nm.

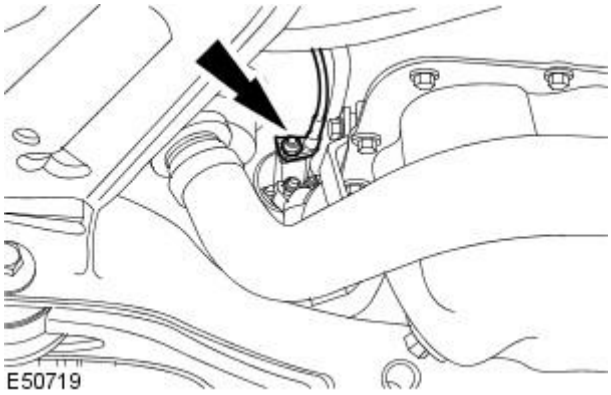


**4.** Tighten to 10 Nm.

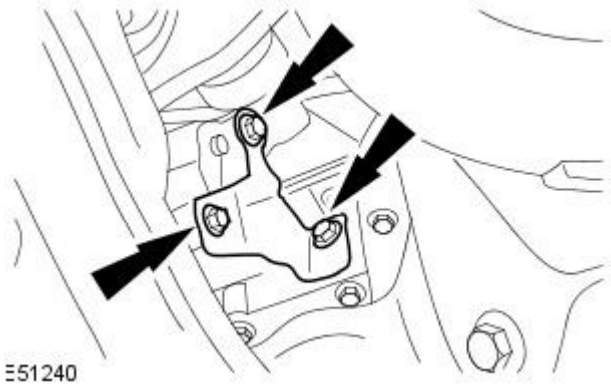


**5.** Tighten to 23 Nm.

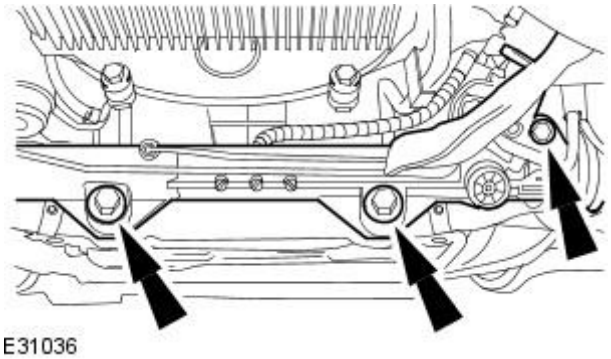


**6.** Tighten to 100 Nm.

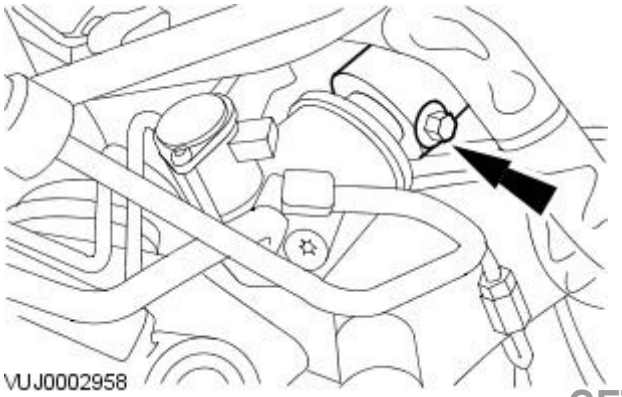


**7.** Tighten to 35 Nm.

GETtheMANUALS.org

8. Make sure the alignment mark on the steering pinion seal protection cover is central to the steering gear pinion casting.

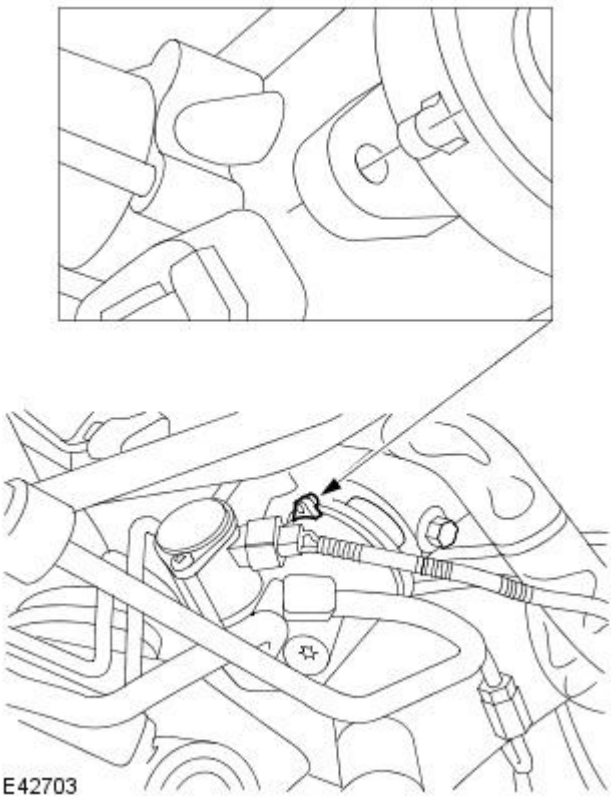


GETtheMANUALS.org

# Engine Ignition - 2.5L NA V6 - AJV6 / 3.0L NA V6 - AJ27 -

**General Specifications**

| Item | Specification |
|---|---|
| Firing order | 1-4-2-5-3-6 |
| Spark plug gap | 1.3-1.45mm (0.051-0.057in) |
| Spark plug type | AWSF22FS |
| High temperature nickel anti-seize lubricant F6AZ-9L494-AA (Spark plug thread) | ESE-M12A4-A |

**Torque Specifications**

| Description | Nm | lb-ft | lb-in |
|---|---|---|---|
| Spark plugs | 15 | 11 | - |
| Ignition coil-on-plug retaining bolts | 6 | - | 53 |

GETtheMANUALS.org

# Engine Ignition - 2.5L NA V6 - AJV6 / 3.0L NA V6 - AJ27 - Engine Ignition

Description and Operation

Component Locations

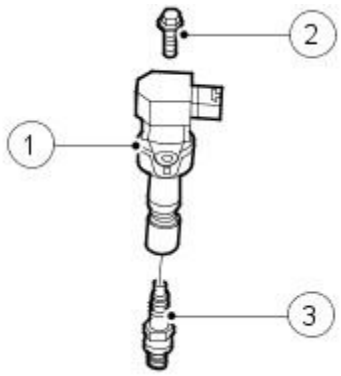


E31029

| Item | Part Number | Description |
|---|---|---|
| 1 | - | Ignition coil-on-plug |
| 2 | - | Ignition coil-on-plug retaining bolt |
| 3 | - | Spark plug |

The right-hand cylinders are numbered 5,3,1 and the left-hand cylinders are numbered 6,4,2 when viewed from the rear of the engine.

The ignition system consists of an ignition coil located on each individual cylinder and each individual spark plug. The ignition timing can now be adjusted more rapidly and independently.

The crankshaft position sensor signal is the basis for ignition timing calculations. The alternating voltage signal from the crankshaft position sensor is converted by the engine control module (ECM). This digital signal is then used to position the closing time of the primary circuit of the ignition coil. The effective range for ignition timing control is increased to the fact that there are no rotating parts.

On the basis of engine speed and load inputs, the powertrain control module determines the ignition timing. This function also takes other inputs into consideration such as engine temperature, throttle position, knock control, cam position, traction control and electronic transmission control inputs.

This ignition system enables the customer to drive the vehicle home if a coil or coil wiring failure occurs. In the event of a wiring failure between the powertrain control module and the coil, the coil will fail instead of the coil fuse blowing, which will allow the remaining coils to continue to function and the engine to limp home.

GETtheMANUALS.org

# Engine Ignition - 2.5L NA V6 - AJV6 / 3.0L NA V6 - AJ27 - Engine IgnitionVIN Range: M45255->N52047

Diagnosis and Testing

1. **1.** Verify the customer concern by operating the system.
2. **2.** Visually inspect for obvious signs of mechanical or electrical damage.
3. **3.** If an obvious cause for an observed or reported concern is found, correct the cause (if possible) before proceeding to the next step.
4. **4.** If the concern is not visually evident, refer to the Symptom Chart.

**Related Faults / Codes**

| Symptom | Possible Sources | Action |
|---|---|---|
| DTC P0300 Random multiple cylinder misfire detected. DTC P0301 to P0306: Misfire at cylinders 1 to 6 | * Poor cylinder compression.<br>* Damaged or worn piston rings.<br>* Inlet/exhaust valve stuck open/closed.<br>* Worn camshaft.<br>* Damaged cylinder head gasket.<br>* Spark plug fouled/incorrect gap. | * Refer to REFER to Section 303-01A Engine / 303-01B Engine / 303-01C Engine. |
| | * Fuel delivery pressure high/low.<br>* Faulty injector (inoperative/leaking).<br>* Fuel injector continuously open.<br>* Fuel contamination.<br>* Fuel injector circuit fault. | * Refer to REFER to Section 303-04A Fuel Charging and Controls / 303-04B Fuel Charging and Controls / 303-04C Fuel Charging and Controls / 303-04D Fuel Charging and Controls - Turbocharger. |
| | * Damaged ignition coil.<br>* Damaged electrical harness/connection.<br>* Damaged spark plug. | * Refer to the Symptom Chart. |

**Symptom Chart**

| Symptom | Possible Sources | Action |
|---|---|---|
| DTC P0351, P0353, P0355: Ignition coils 1A, 2A or 3A primary circuit malfunctions. | * Ignition coil open/short circuit.<br>* Ignition coil insulation breakdown.<br>* Damaged harness.<br>* Connector pins bent or corroded.<br>* Damaged ignition circuit ground.<br>* Damaged engine control module (ECM). | * GO to "Pinpoint Test A" for individual DTC. |
| DTC P0352, P0354, P0356: Ignition coils 1B, 2B or 3B primary circuit malfunctions. | * Ignition coil open/short circuit.<br>* Ignition coil insulation breakdown.<br>* Damaged harness.<br>* Connector pins bent or corroded.<br>* Damaged ignition circuit ground fault.<br>* Damaged ECM. | * GO to "Pinpoint Test A" for individual DTC. |
| DTC P1367: All right-hand bank ignition coils, primary circuit malfunctions (1A, 2A, 3A). | * Ignition coil open/short circuit.<br>* Ignition coil insulation breakdown.<br>* Damaged harness.<br>* Connector pins bent or corroded.<br>* Damaged ignition circuit ground.<br>* Damaged ECM. | * GO to "Pinpoint Test A" for individual DTC. |
| DTC P1368: All left-hand bank ignition coils, primary circuit malfunctions (1B, 2B, 3B). | * Ignition coil open/short circuit.<br>* Ignition coil insulation breakdown.<br>* Damaged harness.<br>* Connector pins bent or corroded.<br>* Damaged ignition circuit ground fault.<br>* Damaged ECM. | * GO to "Pinpoint Test A" for individual DTC. |

GETtheMANUALS.org

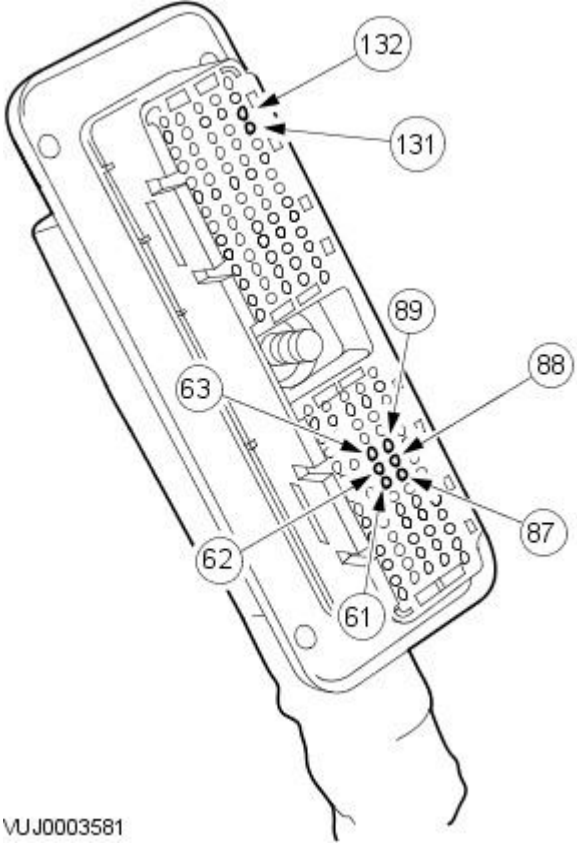


**Powertrain Control Module Harness Electrical Connector**

| Pin Number | Circuit Function | Circuit Color |
|---|---|---|
| 61 | 1B ignition coil trigger | Green/White |
| 62 | 2B ignition coil trigger | Green/White |
| 63 | 3B ignition coil trigger | Green/Red |
| 87 | 1A ignition coil trigger | Green/Blue |
| 88 | 2A ignition coil trigger | Yellow |
| 89 | 3A ignition coil trigger | Yellow/Red |

**1A, 2A, 3A Ignition Coil Harness Electrical Connectors**

| Pin Number | Circuit Function | Circuit Color |
|---|---|---|
| 1 | Ignition coil voltage supply | Red/white |
| 2 | Ignition coil diagnostic signal | Green/Black |
| 3 | Ignition coil ground supply | Black |
| 4 | Ignition coil trigger | 1A - Green/blue, 2A - Yellow, 3A - Yellow/Red |

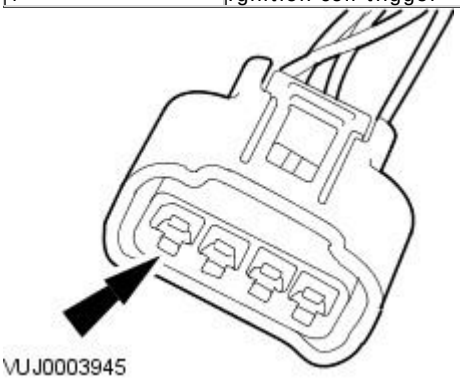


**1B, 2B, 3B Ignition Coil Harness Electrical Connectors**

| Pin Number | Circuit Function | Circuit Color |
|---|---|---|
| 1 | Ignition coil voltage supply | Red/White |
| 2 | Ignition coil diagnostic signal | Yellow/Black |
| 3 | Ignition coil ground supply | Black |
| 4 | Ignition coil trigger | 1B - Green/White, 2B - Green/White, 3B - Green/Red |

GETtheMANUALS.org

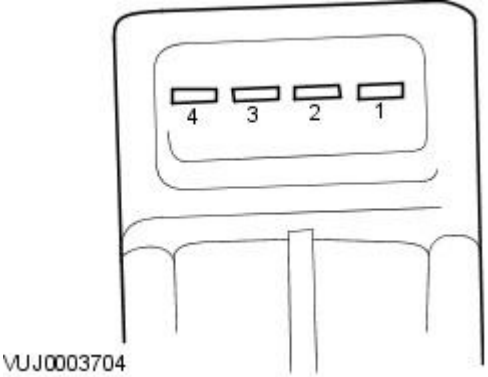


**1A, 2A, 3A, 1B, 2B, 3B Ignition Coils**

| Pin Number | Circuit Function |
|---|---|
| 1 | Ignition coil voltage supply |
| 2 | Ignition coil diagnostic signal |
| 3 | Ignition coil ground supply |
| 4 | Ignition coil trigger |

| PINPOINT TEST A : IGNITION COILS — P0351, P0352, P0353, P0354, P0355, P0356, P1367, P1368 | |
|---|---|
| • NOTE: Unless multiple cylinder misfires are apparent, only one circuit will normally need to be tested. The DTC set will indicate which cylinder is misfiring. | |
| **TEST CONDITIONS** | **DETAILS/RESULTS/ACTIONS** |
| **A1: CHECK COIL FUNCTION BY SUBSTITUTION** | |
| | 1 Replace the suspected faulty coil with a good one. |
| | 2 CLEAR the DTC. TEST the system for normal operation. |
| | Does the same DTC reoccur? The DTC will indicate if the same cylinder is misfiring.<br>**Yes**<br>GO to A2.<br>**No**<br>CLEAR the DTC. TEST the system for normal operation. |
| **A2: CHECK THE IGNITION COIL SUPPLY VOLTAGE CIRCUIT** | |
| | 1 Disconnect the relevant right-hand bank ignition coil electrical connector(s). |
| | 2 Turn the ignition switch to the ON position. |
| | 3 Measure the voltage between:<br>• Cyl 1A. PI002 pin 1, (RW) and GROUND.<br>• Cyl 2A. PI003 pin 1, (RW) and GROUND.<br>• Cyl 3A. PI004 pin 1, (RW) and GROUND. |
| | 4 Disconnect the relevant left-hand bank ignition coil electrical connector(s). |
| | 5 Measure the voltage between:<br>• Cyl 1B. PI006 pin 1, (RW) and GROUND.<br>• Cyl 2B. PI007 pin 1, (RW) and GROUND.<br>• Cyl 3B. PI008 pin 1, (RW) and GROUND. |
| | Is the voltage greater than 10.5 Volts?<br>**Yes**<br>GO to A3.<br>**No**<br>REPAIR the relevant ignition coil supply voltage circuit. For additional information, refer to wiring digrams. CLEAR the DTCs. TEST the system for normal operation. |
| **A3: CHECK THE IGNITION COIL GROUND CIRCUIT** | |
| | 1 Switch the ignition to the OFF position. |
| | 2 Disconnect the relevant right-hand bank ignition coil electrical connector(s). |
| | 3 Measure the resistance between:<br>• Cyl 1A. PI002 pin 3, (B) and GROUND.<br>• Cyl 2A. PI003 pin 3, (B) and GROUND.<br>• Cyl 3A. PI004 pin 3, (B) and GROUND. |
| | 4 Disconnect the relevant left-hand bank ignition coil electrical connector(s). |
| | 5 Measure the resistance between:<br>• Cyl 1B. PI006 pin 3, (B) and GROUND.<br>• Cyl 2B. PI007 pin 3, (B) and GROUND.<br>• Cyl 3B. PI008 pin 3, (B) and GROUND. |
| | Is the resistance less than 5 ohms?<br>**Yes**<br>GO to A4.<br>**No**<br>REPAIR the relevant ignition coil ground circuit. For additional information, refer to wiring diagrams. CLEAR the DTCs. TEST the system for normal operation. |
| **A4: CHECK THE CONTINUITY OF THE IGNITION COIL TRIGGER SUPPLY CIRCUIT** | |
| | 1 Disconnect the ECM electrical connector PI001. |
| | 2 Check the continuity of the ignition coil trigger supply circuit between the relevant ignition coil electrical connector(s) and the ECM electrical connector:<br>• Cyl 1A. PI002 pin 4, (GU) and PI001 pin 87, (GU)<br>• Cyl 2A. PI003 pin 4, (Y) and PI001 pin 88, (Y)<br>• Cyl 3A. PI004 pin 4, (YR) and PI001 pin 89, (YR)<br>• Cyl 1B. PI006 pin 4, (GW) and PI001 pin 61, (GW) |

GETtheMANUALS.org

| | |
|---|---|
| | • Cyl 2B. PI007 pin 4, (GW) and PI001 pin 62, (GW)<br>• Cyl 3B. PI008 pin 4, (GR) and PI001 pin 63, (GR) |
| | Is the resistance less than 5 ohms?<br>**Yes**<br>GO to A5.<br>**No**<br>REPAIR the ignition coil trigger supply circuit between the relevant ignition coil electrical connector(s) and the ECM electrical connector. CLEAR the DTCs. TEST the system for normal operation. |
| **A5: CHECK THE CONTINUITY BETWEEN THE IGNITION COIL AND THE ECM** | |
| | 1 Check the continuity of the ignition coil diagnostic signal circuit, between the ignition coil electrical connector(s) and the ECM electrical connector:<br><br>• Cyl 1A. PI002 pin 2, (GB) and PI001 pin 131, (GB)<br>• Cyl 2A. PI003 pin 2, (GB) and PI001 pin 131, (GB)<br>• Cyl 3A. PI004 pin 2, (GB) and PI001 pin 131, (GB)<br>• Cyl 1B. PI006 pin 2, (YB) and PI001 pin 132, (YB)<br>• Cyl 2B. PI007 pin 2, (YB) and PI001 pin 132, (YB)<br>• Cyl 3B. PI008 pin 2, (YB) and PI001 pin 132, (YB) |
| | Is the resistance less than 5 Ohms?<br>**Yes**<br>INSTALL a new ECM. For additional information refer to REFER to Section 303-14A Electronic Engine Controls / 303-14B Electronic Engine Controls / 303-14C Electronic Engine Controls. Before replacing a ECM, contact Dealer technical support. CLEAR the DTCs. TEST the system for normal operation.<br>**No**<br>REPAIR the circuit between the ignition coil electrical connector(s) and the ECM electrical connector. CLEAR the DTCs. TEST the system for normal operation. |

GETtheMANUALS.org

# Engine Ignition - 2.5L NA V6 - AJV6 / 3.0L NA V6 - AJ27 - Engine IgnitionVIN Range: N52048->N99999

Diagnosis and Testing

## Overview

There are changes to the engine management system (EMS) for 2006 my, the most obvious of which will be the change to 7-digit diagnostic trouble codes (DTCs) from the familiar 5-digit.

Refer to the DTC index in this section for guidance on how to use these codes with the Jaguar approved diagnostic system or a scan tool.

## Inspection and Verification

1. **1.** Verify the customer concern.
2. **2.** Visually inspect for obvious signs of mechanical or electrical damage.

**Visual inspection**

| Mechanical | Electrical |
|---|---|
| • Engine oil level<br>• Cooling system coolant level<br>• Fuel level<br>• Fuel contamination/grade/quality | • Fuses<br>• Wiring harness<br>• Loose or corroded electrical connectors<br>• Ignition coils<br>• Sensor(s)<br>• Engine control module (ECM)<br>• Transmission control module (TCM) |

3. **3.** If an obvious cause for an observed or reported concern is found, correct the cause (if possible) before proceeding to the next step.
4. **4.** If the cause is not visually evident use the Jaguar approved diagnostic system or a scan tool to retrieve the fault codes before proceeding to the DTC Index.

## Symptom Chart

| Symptom | Possible source | Action |
|---|---|---|
| Engine cranks, but does not fire | • Engine breather system disconnected/restricted<br>• Ignition system<br>• Fuel system<br>• Harness<br>• Crankshaft position (CKP) sensor<br>• ECM fault | Check the engine breather system,<br>REFER to: Engine Emission Control - VIN Range: N80181->R99999 (303-08A Engine Emission Control - V8 4.2L Petrol/V8 S/C 4.2L Petrol/2.5L NA V6 - AJV6/3.0L NA V6 - AJ27, Diagnosis and Testing).<br>For ignition system tests, refer to pinpoint tests in this section. Check the fuel pressure,<br>REFER to: Fuel Tank and Lines - V8 4.2L Petrol/V8 S/C 4.2L Petrol/2.5L NA V6 - AJV6/3.0L NA V6 - AJ27, VIN Range: N80181->R99999 (310-01 Fuel Tank and Lines, Diagnosis and Testing).<br>For CKP tests,<br>REFER to: Electronic Engine Controls - VIN Range: N80181->R99999 (303-14A Electronic Engine Controls - 2.5L NA V6 - AJV6/3.0L NA V6 - AJ27, Diagnosis and Testing).<br>Refer to the warranty policy and procedures manual if an ECM is suspect. |
| Engine cranks and fires, but will not start | • Evaporative emissions purge valve<br>• Fuel pump<br>• Spark plugs<br>• HT short to ground (tracking) check rubber boots for cracks/damage<br>• Ignition coil failure(s)<br>• Harness | For purge valve tests,<br>REFER to: Evaporative Emissions - VIN Range: N52048->N99999 (303-13 Evaporative Emissions, Diagnosis and Testing).<br>Check the fuel pressure,<br>REFER to: Fuel Tank and Lines - V8 4.2L Petrol/V8 S/C 4.2L Petrol/2.5L NA V6 - AJV6/3.0L NA V6 - AJ27, VIN Range: N80181->R99999 (310-01 Fuel Tank and Lines, Diagnosis and Testing).<br>For spark plug tests, GO to Pinpoint Test B. For ignition coil circuit tests, GO to Pinpoint Test A. |
| Difficult to start cold | • Coolant anti-freeze content<br>• Battery<br>• CKP sensor<br>• Exhaust gas recirculation (EGR) valve stuck open<br>• Fuel pump<br>• Purge valve | Check the anti-freeze content. For battery information,<br>REFER to: Battery (414-01 Battery, Mounting and Cables, Diagnosis and Testing).<br>For CKP sensor tests,<br>REFER to: Electronic Engine Controls - VIN Range: N80181->R99999 (303-14A Electronic Engine Controls - 2.5L NA V6 - AJV6/3.0L NA V6 - AJ27, Diagnosis and Testing).<br>For EGR valve tests,<br>REFER to: Engine Emission Control - VIN Range: N80181->R99999 (303-08A Engine Emission Control - V8 4.2L Petrol/V8 S/C 4.2L Petrol/2.5L NA V6 - AJV6/3.0L NA V6 - AJ27, Diagnosis and Testing).<br>Check the fuel pressure,<br>REFER to: Fuel Tank and Lines - V8 4.2L Petrol/V8 S/C 4.2L Petrol/2.5L NA V6 - AJV6/3.0L NA V6 - AJ27, VIN Range: N80181->R99999 (310-01 Fuel Tank and Lines, Diagnosis and Testing).<br>For purge valve tests,<br>REFER to: Evaporative Emissions - VIN Range: N52048->N99999 (303-13 Evaporative Emissions, Diagnosis and Testing). |

GETtheMANUALS.org

| Symptom | Possible source | Action |
|---|---|---|
| Difficult to start hot | • Injector leak<br>• Engine fuel temperature (EFT) sensor<br>• Intake air temperature (IAT) sensor<br>• Mass air flow (MAF) sensor<br>• Purge valve<br>• Fuel pump<br>• Ignition system<br>• EGR valve stuck open | For fuel injectors,<br>REFER to: Fuel Injectors (303-04A Fuel Charging and Controls - 2.5L NA V6 - AJV6/3.0L NA V6 - AJ27, Removal and Installation).<br>For EFT, IAT and MAF sensor tests,<br>REFER to: Electronic Engine Controls - VIN Range: N80181->R99999 (303-14A Electronic Engine Controls - 2.5L NA V6 - AJV6/3.0L NA V6 - AJ27, Diagnosis and Testing).<br>For purge valve tests,<br>REFER to: Evaporative Emissions - VIN Range: N52048->N99999 (303-13 Evaporative Emissions, Diagnosis and Testing).<br>Check the fuel pressure,<br>REFER to: Fuel Tank and Lines - V8 4.2L Petrol/V8 S/C 4.2L Petrol/2.5L NA V6 - AJV6/3.0L NA V6 - AJ27, VIN Range: N80181->R99999 (310-01 Fuel Tank and Lines, Diagnosis and Testing).<br>For ignition coil circuit tests, GO to Pinpoint Test A. For EGR valve tests,<br>REFER to: Engine Emission Control - VIN Range: N80181->R99999 (303-08A Engine Emission Control - V8 4.2L Petrol/V8 S/C 4.2L Petrol/2.5L NA V6 - AJV6/3.0L NA V6 - AJ27, Diagnosis and Testing). |
| Difficult to start after hot soak (vehicle standing after engine has reached operating temperature) | • Injector leak<br>• EFT sensor<br>• IAT sensor<br>• MAF sensor<br>• Purge valve<br>• Fuel pump<br>• Ignition system<br>• EGR valve stuck open | For fuel injectors,<br>REFER to: Fuel Injectors (303-04A Fuel Charging and Controls - 2.5L NA V6 - AJV6/3.0L NA V6 - AJ27, Removal and Installation).<br>For EFT, IAT and MAF sensor tests,<br>REFER to: Electronic Engine Controls - VIN Range: N80181->R99999 (303-14A Electronic Engine Controls - 2.5L NA V6 - AJV6/3.0L NA V6 - AJ27, Diagnosis and Testing).<br>For purge valve tests,<br>REFER to: Evaporative Emissions - VIN Range: N52048->N99999 (303-13 Evaporative Emissions, Diagnosis and Testing).<br>Check the fuel pressure,<br>REFER to: Fuel Tank and Lines - V8 4.2L Petrol/V8 S/C 4.2L Petrol/2.5L NA V6 - AJV6/3.0L NA V6 - AJ27, VIN Range: N80181->R99999 (310-01 Fuel Tank and Lines, Diagnosis and Testing).<br>For ignition coil circuit tests, GO to Pinpoint Test A. For EGR valve tests,<br>REFER to: Engine Emission Control - VIN Range: N80181->R99999 (303-08A Engine Emission Control - V8 4.2L Petrol/V8 S/C 4.2L Petrol/2.5L NA V6 - AJV6/3.0L NA V6 - AJ27, Diagnosis and Testing). |
| Engine stalls soon after start | • Breather system disconnected/restricted<br>• ECM relay<br>• Harness<br>• MAF sensor<br>• Ignition system<br>• Air filter restricted<br>• Fuel lines<br>• Fuel rail pressure (FRP) sensor<br>• Air leakage | For breather system,<br>REFER to: Engine Emission Control - VIN Range: N80181->R99999 (303-08A Engine Emission Control - V8 4.2L Petrol/V8 S/C 4.2L Petrol/2.5L NA V6 - AJV6/3.0L NA V6 - AJ27, Diagnosis and Testing).<br>For ECM relay and MAF sensor tests,<br>REFER to: Electronic Engine Controls - VIN Range: N80181->R99999 (303-14A Electronic Engine Controls - 2.5L NA V6 - AJV6/3.0L NA V6 - AJ27, Diagnosis and Testing).<br>For ignition coil circuit tests, GO to Pinpoint Test A. For air filter information,<br>REFER to: Intake Air Distribution and Filtering - VIN Range: N52048->N99999 (303-12A Intake Air Distribution and Filtering - 2.5L NA V6 - AJV6/3.0L NA V6 - AJ27, Diagnosis and Testing).<br>Check the fuel lines,<br>REFER to: Fuel Tank and Lines - V8 4.2L Petrol/V8 S/C 4.2L Petrol/2.5L NA V6 - AJV6/3.0L NA V6 - AJ27, VIN Range: N80181->R99999 (310-01 Fuel Tank and Lines, Diagnosis and Testing).<br>For FRP sensor tests,<br>REFER to: Electronic Engine Controls - VIN Range: N80181->R99999 (303-14A Electronic Engine Controls - 2.5L NA V6 - AJV6/3.0L NA V6 - AJ27, Diagnosis and Testing).<br>For intake system information,<br>REFER to: Intake Air Distribution and Filtering - VIN Range: N52048->N99999 (303-12A Intake Air Distribution and Filtering - 2.5L NA V6 - AJV6/3.0L NA V6 - AJ27, Diagnosis and Testing). |
| Engine hesitates/poor acceleration | • Fuel pump<br>• Injector leak<br>• Fuel pressure<br>• Fuel lines<br>• Air leakage<br>• Throttle position (TP) sensors<br>• Throttle motor<br>• Ignition system<br>• EGR valve stuck open<br>• HO2 sensors<br>• Transmission malfunction<br>• Restricted pedal travel (carpet, etc)<br>• Accelerator pedal position (APP) sensor | Check the fuel pressure, check the fuel lines,<br>REFER to: Fuel Tank and Lines - V8 4.2L Petrol/V8 S/C 4.2L Petrol/2.5L NA V6 - AJV6/3.0L NA V6 - AJ27, VIN Range: N80181->R99999 (310-01 Fuel Tank and Lines, Diagnosis and Testing).<br>For intake system,<br>REFER to: Intake Air Distribution and Filtering - VIN Range: N52048->N99999 (303-12A Intake Air Distribution and Filtering - 2.5L NA V6 - AJV6/3.0L NA V6 - AJ27, Diagnosis and Testing).<br>For TP sensor and throttle motor tests,<br>REFER to: Electronic Engine Controls - VIN Range: N80181->R99999 (303-14A Electronic Engine Controls - 2.5L NA V6 - AJV6/3.0L NA V6 - AJ27, Diagnosis and Testing).<br>For ignition coil circuit tests, GO to Pinpoint Test A. For EGR valve tests,<br>REFER to: Engine Emission Control - VIN Range: N80181->R99999 (303-08A Engine Emission Control - V8 4.2L Petrol/V8 S/C 4.2L Petrol/2.5L NA V6 - AJV6/3.0L NA V6 - AJ27, |

GETtheMANUAL.org

| Symptom | Possible source | Action |
|---|---|---|
| | | Diagnosis and Testing).<br>Check for DTCs relating to HO2 sensors. Refer to the DTC index. For transmission information,<br>REFER to: Diagnostic Strategy - VIN Range: N52048->N99999 (307-01 Automatic Transmission/Transaxle, Diagnosis and Testing).<br>Check the accelerator pedal travel. For APP sensor tests,<br>REFER to: Electronic Engine Controls - VIN Range: N80181->R99999 (303-14A Electronic Engine Controls - 2.5L NA V6 - AJV6/3.0L NA V6 - AJ27, Diagnosis and Testing). |
| Engine backfires | • Fuel pump<br>• Fuel lines<br>• Air leakage<br>• MAF sensor<br>• HO2 sensors<br>• Ignition system<br>• Sticking variable camshaft timing (VCT) hub<br>• APP sensor | Check the fuel pressure, check the fuel lines,<br>REFER to: Fuel Tank and Lines - V8 4.2L Petrol/V8 S/C 4.2L Petrol/2.5L NA V6 - AJV6/3.0L NA V6 - AJ27, VIN Range: N80181->R99999 (310-01 Fuel Tank and Lines, Diagnosis and Testing).<br>For intake system,<br>REFER to: Intake Air Distribution and Filtering - VIN Range: N52048->N99999 (303-12A Intake Air Distribution and Filtering - 2.5L NA V6 - AJV6/3.0L NA V6 - AJ27, Diagnosis and Testing).<br>For MAF sensor tests,<br>REFER to: Electronic Engine Controls - VIN Range: N80181->R99999 (303-14A Electronic Engine Controls - 2.5L NA V6 - AJV6/3.0L NA V6 - AJ27, Diagnosis and Testing).<br>Check for DTCs relating to HO2 sensors. Refer to the DTC index. For ignition coil circuit tests, GO to Pinpoint Test A. For VCT tests,<br>REFER to: Electronic Engine Controls - VIN Range: N80181->R99999 (303-14A Electronic Engine Controls - 2.5L NA V6 - AJV6/3.0L NA V6 - AJ27, Diagnosis and Testing).<br>For APP sensor tests,<br>REFER to: Electronic Engine Controls - VIN Range: N80181->R99999 (303-14A Electronic Engine Controls - 2.5L NA V6 - AJV6/3.0L NA V6 - AJ27, Diagnosis and Testing). |
| Engine surges | • Fuel pump<br>• Fuel lines<br>• MAF sensor<br>• Harness<br>• TP sensors<br>• Throttle motor<br>• Ignition system | Check the fuel pressure, check the fuel lines,<br>REFER to: Fuel Tank and Lines - V8 4.2L Petrol/V8 S/C 4.2L Petrol/2.5L NA V6 - AJV6/3.0L NA V6 - AJ27, VIN Range: N80181->R99999 (310-01 Fuel Tank and Lines, Diagnosis and Testing).<br>For MAF, TP sensor and throttle motor tests,<br>REFER to: Electronic Engine Controls - VIN Range: N80181->R99999 (303-14A Electronic Engine Controls - 2.5L NA V6 - AJV6/3.0L NA V6 - AJ27, Diagnosis and Testing).<br>For ignition coil circuit tests, GO to Pinpoint Test A. |
| Engine detonates/knocks | • Knock sensor (KS) circuit malfunction<br>• Fuel pump<br>• Fuel lines<br>• FRP sensor<br>• MAF sensor<br>• HO2 sensors<br>• Air leakage<br>• Sticking VCT hub<br>• BARO sensor malfunction (internal ECM fault) | For KS circuit tests,<br>REFER to: Electronic Engine Controls - VIN Range: N80181->R99999 (303-14A Electronic Engine Controls - 2.5L NA V6 - AJV6/3.0L NA V6 - AJ27, Diagnosis and Testing).<br>Check the fuel pressure, check the fuel lines,<br>REFER to: Fuel Tank and Lines - V8 4.2L Petrol/V8 S/C 4.2L Petrol/2.5L NA V6 - AJV6/3.0L NA V6 - AJ27, VIN Range: N80181->R99999 (310-01 Fuel Tank and Lines, Diagnosis and Testing).<br>For FRP, MAF and HO2 sensor tests,<br>REFER to: Electronic Engine Controls - VIN Range: N80181->R99999 (303-14A Electronic Engine Controls - 2.5L NA V6 - AJV6/3.0L NA V6 - AJ27, Diagnosis and Testing).<br>For intake system,<br>REFER to: Intake Air Distribution and Filtering - VIN Range: N52048->N99999 (303-12A Intake Air Distribution and Filtering - 2.5L NA V6 - AJV6/3.0L NA V6 - AJ27, Diagnosis and Testing).<br>Check DTCs for VCT range/performance fault. For VCT tests,<br>REFER to: Electronic Engine Controls - VIN Range: N80181->R99999 (303-14A Electronic Engine Controls - 2.5L NA V6 - AJV6/3.0L NA V6 - AJ27, Diagnosis and Testing).<br>Refer to the warranty policy and procedures manual if an ECM is suspect. |
| No throttle response | • APP sensor malfunction<br>• TP sensors<br>• Throttle motor | For APP, TP sensor and throttle motor tests,<br>REFER to: Electronic Engine Controls - VIN Range: N80181->R99999 (303-14A Electronic Engine Controls - 2.5L NA V6 - AJV6/3.0L NA V6 - AJ27, Diagnosis and Testing). |
| Poor throttle response | • APP sensor malfunction<br>• TP sensors<br>• ECT sensor<br>• MAF sensor<br>• Transmission malfunction<br>• Traction control event<br>• Air leakage<br>• Breather system disconnected/restricted | For APP, TP, ECT, and MAF sensor tests,<br>REFER to: Electronic Engine Controls - VIN Range: N80181->R99999 (303-14A Electronic Engine Controls - 2.5L NA V6 - AJV6/3.0L NA V6 - AJ27, Diagnosis and Testing).<br>For transmission information,<br>REFER to: Diagnostic Strategy - VIN Range: N52048->N99999 (307-01 Automatic Transmission/Transaxle, Diagnosis and Testing).<br>For intake system,<br>REFER to: Intake Air Distribution and Filtering - VIN Range: N52048->N99999 (303-12A Intake Air Distribution and Filtering - 2.5L NA V6 - AJV6/3.0L NA V6 - AJ27, Diagnosis and Testing).<br>For breather system information,<br>REFER to: Engine Emission Control - VIN Range: N80181->R99999 (303-08A Engine Emission Control - V8 4.2L Petrol/V8 S/C 4.2L Petrol/2.5L NA V6 - AJV6/3.0L NA V6 - AJ27, Diagnosis and Testing). |

## DTC Index

GETtheMANUALS.org

• NOTE: Generic scan tools may not read the codes listed, or may read only 5-digit codes. Match the 5 digits from the scan tool to the first

5 digits of the 7-digit code listed to identify the fault (the last 2 digits give extra information read by the manufacturer-approved diagnostic system).

| DTC | Description | Possible causes | Action |
|---|---|---|---|
| P035100 | Cylinder 1 ignition coil primary/secondary circuit | • ECM to ignition module/coil drive circuit: short circuit to ground, high resistance<br>• Ignition module/coil ground circuit: high resistance<br>• Ignition module/coil supply circuit: open circuit (including relay) | For ignition coil tests, GO to Pinpoint Test A. |
| P035200 | Cylinder 2 ignition coil primary/secondary circuit | • ECM to ignition module/coil drive circuit: short circuit to ground, high resistance<br>• Ignition module/coil ground circuit: high resistance<br>• Ignition module/coil supply circuit: open circuit (including relay) | For ignition coil tests, GO to Pinpoint Test A. |
| P035300 | Cylinder 3 ignition coil primary/secondary circuit | • ECM to ignition module/coil drive circuit: short circuit to ground, high resistance<br>• Ignition module/coil ground circuit: high resistance<br>• Ignition module/coil supply circuit: open circuit (including relay) | For ignition coil tests, GO to Pinpoint Test A. |
| P035400 | Cylinder 4 ignition coil primary/secondary circuit | • ECM to ignition module/coil drive circuit: short circuit to ground, high resistance<br>• Ignition module/coil ground circuit: high resistance<br>• Ignition module/coil supply circuit: open circuit (including relay) | For ignition coil tests, GO to Pinpoint Test A. |
| P035500 | Cylinder 5 ignition coil primary/secondary circuit | • ECM to ignition module/coil drive circuit: short circuit to ground, high resistance<br>• Ignition module/coil ground circuit: high resistance<br>• Ignition module/coil supply circuit: open circuit (including relay) | For ignition coil tests, GO to Pinpoint Test A. |
| P035600 | Cylinder 6 ignition coil primary/secondary circuit | • ECM to ignition module/coil drive circuit: short circuit to ground, high resistance<br>• Ignition module/coil ground circuit: high resistance<br>• Ignition module/coil supply circuit: open circuit (including relay) | For ignition coil tests, GO to Pinpoint Test A. |
| P131500 | Persistent misfire | • Spark plug failure/fouled/incorrect gap<br>• ECM to ignition coil primary circuit fault (cylinder misfire detected DTC also flagged)<br>• Fuel delivery pressure low<br>• Fuel injector circuit fault(s) (injector DTCs also flagged)<br>• Ignition coil failure<br>• Cylinder compression low | For spark plug tests, GO to Pinpoint Test B. For ignition coil circuit tests, GO to Pinpoint Test A. Check the fuel pressure, REFER to: Fuel Tank and Lines - V8 4.2L Petrol/V8 S/C 4.2L Petrol/2.5L NA V6 - AJV6/3.0L NA V6 - AJ27, VIN Range: N80181->R99999 (310-01 Fuel Tank and Lines, Diagnosis and Testing).<br>For injector circuit tests,<br>REFER to: Fuel Charging and Controls - VIN Range: N52048->N99999 (303-04A Fuel Charging and Controls - 2.5L NA V6 - AJV6/3.0L NA V6 - AJ27, Diagnosis and Testing).<br>Check the cylinder compressions. |
| P136700 | Ignition amplifier group A | • Ignition monitoring circuit to ECM: high resistance, short circuit to ground, short circuit to power<br>• Ignition module/coils right hand bank ground circuit fault | For ignition coil circuit tests, GO to Pinpoint Test A. |
| P136800 | Ignition amplifier group B | • Ignition monitoring circuit to ECM: high resistance, short circuit to ground, short circuit to power<br>• Ignition module/coils left hand bank ground circuit fault | For ignition coil circuit tests, GO to Pinpoint Test A. |

## Pinpoint Tests

CAUTION: When probing connectors to take measurements in the course of the pinpoint tests, use the adaptor kit, part number 3548-1358-00.

• NOTE: When performing electrical voltage or resistance tests, always use a digital multimeter (DMM) accurate to 3 decimal places, and with an up-to-date calibration certificate. When testing resistance, always take the resistance of the DMM leads into account.

• NOTE: Check and rectify basic faults before beginning diagnostic routines involving pinpoint tests.

| PINPOINT TEST A : IGNITION COIL CIRCUITS | |
|---|---|
| • NOTE: Unless multiple cylinder misfires are apparent, only one circuit will normally need to be tested. The DTC set will indicate which cylinder is misfiring. | |
| TEST CONDITIONS | DETAILS/RESULTS/ACTIONS |

GETtheMANUALS.org

**A1: CHECK THE IGNITION COIL SUPPLY VOLTAGE CIRCUIT**

1 Disconnect the relevant ignition coil electrical connector:

| Ignition coil connector |
|---|
| Cylinder 1, PI02 |
| Cylinder 2, PI06 |
| Cylinder 3, PI03 |
| Cylinder 4, PI07 |
| Cylinder 5, PI04 |
| Cylinder 6, PI08 |

2 Key on, engine off.

3 Make sure the ignition relay is energized.

4 Measure the voltage between:

| Ignition coil connector, harness side | Battery |
|---|---|
| Pin 01 | Negative terminal |

Is the voltage less than 10.5 Volts?

**Yes**

REPAIR the relevant ignition coil supply circuit. This circuit includes fuse 15 of the front power distribution box and the ignition relay. For additional information, refer to the wiring diagrams. CLEAR the DTCs and test the system for normal operation.

**No**

GO to A2.

**A2: CHECK THE IGNITION COIL SWITCHING CIRCUITS FOR SHORT CIRCUIT TO GROUND**

1 Key off.

2 Measure the resistance between:

| Ignition coil connector, harness side | Battery |
|---|---|
| Pin 04 | Negative terminal |

Is the resistance less than 10,000 ohms?

**Yes**

REPAIR the short circuit. For additional information, refer to the wiring diagrams. CLEAR the DTCs and test the system for normal operation.

**No**

GO to A3.

**A3: CHECK THE IGNITION COIL SWITCHING CIRCUITS FOR SHORT CIRCUIT TO POWER**

1 Measure the resistance between:

| Ignition coil connector, harness side | Battery |
|---|---|
| Pin 04 | Positive terminal |

Is the resistance less than 10,000 ohms?

**Yes**

REPAIR the short circuit. For additional information, refer to the wiring diagrams. CLEAR the DTCs and test the system for normal operation.

**No**

GO to A4.

**A4: CHECK THE IGNITION COIL MONITOR CIRCUITS FOR SHORT CIRCUIT TO GROUND**

1 Measure the resistance between:

| Ignition coil connector, harness side | Battery |
|---|---|
| Pin 02 | Negative terminal |

Is the resistance less than 10,000 ohms?

**Yes**

REPAIR the short circuit. For additional information, refer to the wiring diagrams. CLEAR the DTCs and test the system for normal operation.

**No**

GO to A5.

**A5: CHECK THE IGNITION COIL MONITOR CIRCUITS FOR SHORT CIRCUIT TO POWER**

1 Measure the resistance between:

| Ignition coil connector, harness side | Battery |
|---|---|
| Pin 02 | Positive terminal |

Is the resistance less than 10,000 ohms?

**Yes**

REPAIR the short circuit. For additional information, refer to the wiring diagrams. CLEAR the DTCs and test the system for normal operation.

**No**

GO to A6.

**A6: CHECK THE IGNITION COIL GROUND CIRCUIT FOR HIGH RESISTANCE**

• NOTE: Unless multiple cylinder misfires are apparent, only one circuit will normally need to be tested. The DTC set will indicate which cylinder is misfiring.

1 Measure the resistance between:

| Cylinder 1 ignition coil connector, harness side | Battery |
|---|---|
| PI02, pin 03 | Negative terminal |
| **Cylinder 2 ignition coil connector, harness side** | **Battery** |
| PI06, pin 03 | Negative terminal |
| **Cylinder 3 ignition coil connector, harness side** | **Battery** |
| PI03, pin 03 | Negative terminal |
| **Cylinder 4 ignition coil connector, harness side** | **Battery** |
| PI07, pin 03 | Negative terminal |
| **Cylinder 5 ignition coil connector, harness side** | **Battery** |
| PI04, pin 03 | Negative terminal |
| **Cylinder 6 ignition coil connector, harness side** | **Battery** |
| PI08, pin 03 | Negative terminal |

Is the resistance greater than 5 ohms?

**Yes**

REPAIR the high resistance circuit. For additional information, refer to the wiring diagrams. CLEAR the DTCs and test the system for normal operation.

**No**

GO to A7.

GETtheMANUALS.org

**A7: CHECK THE IGNITION COIL SWITCHING CIRCUITS FOR HIGH RESISTANCE**

• NOTE: Unless multiple cylinder misfires are apparent, only one circuit will normally need to be tested. The DTC set will indicate which cylinder is misfiring.

1 Disconnect the ECM electrical connector, PI300.

2 Measure the resistance between:

| Cylinder 1 ignition coil connector, harness side | ECM connector PI300, harness side |
|---|---|
| PI02, pin 04 | Pin 61 |
| **Cylinder 2 ignition coil connector, harness side** | **ECM connector PI300, harness side** |
| PI06, pin 04 | Pin 60 |
| **Cylinder 3 ignition coil connector, harness side** | **ECM connector PI300, harness side** |
| PI03, pin 04 | Pin 59 |
| **Cylinder 4 ignition coil connector, harness side** | **ECM connector PI300, harness side** |
| PI07, pin 04 | Pin 58 |
| **Cylinder 5 ignition coil connector, harness side** | **ECM connector PI300, harness side** |
| PI04, pin 04 | Pin 57 |
| **Cylinder 6 ignition coil connector, harness side** | **ECM connector PI300, harness side** |
| PI08, pin 04 | Pin 56 |

Is the resistance greater than 5 ohms?

**Yes**

REPAIR the high resistance circuit. For additional information, refer to the wiring diagrams. CLEAR the DTCs and test the system for normal operation.

**No**

GO to A8.

**A8: CHECK THE IGNITION COIL MONITOR CIRCUITS FOR HIGH RESISTANCE**

• NOTE: Unless multiple cylinder misfires are apparent, only one circuit will normally need to be tested. The DTC set will indicate which cylinder is misfiring.

1 Measure the resistance between:

| Cylinder 1 ignition coil connector, harness side | ECM connector PI300, harness side |
|---|---|
| PI02, pin 02 | Pin 62 |
| **Cylinder 2 ignition coil connector, harness side** | **ECM connector PI300, harness side** |
| PI06, pin 02 | Pin 64 |
| **Cylinder 3 ignition coil connector, harness side** | **ECM connector PI300, harness side** |
| PI03, pin 02 | Pin 62 |
| **Cylinder 4 ignition coil connector, harness side** | **ECM connector PI300, harness side** |
| PI07, pin 02 | Pin 64 |
| **Cylinder 5 ignition coil connector, harness side** | **ECM connector PI300, harness side** |
| PI04, pin 02 | Pin 62 |
| **Cylinder 6 ignition coil connector, harness side** | **ECM connector PI300, harness side** |
| PI08, pin 02 | Pin 64 |

Is the resistance greater than 5 ohms?

**Yes**

REPAIR the high resistance circuit. For additional information, refer to the wiring diagrams. CLEAR the DTCs and test the system for normal operation.

**No**

INSTALL a new ignition coil to the relevant cylinder.
REFER to: Ignition Coil-On-Plug LH (303-07A Engine Ignition - 2.5L NA V6 - AJV6/3.0L NA V6 - AJ27, Removal and Installation).
or
REFER to: Ignition Coil-On-Plug RH (303-07A Engine Ignition - 2.5L NA V6 - AJV6/3.0L NA V6 - AJ27, Removal and Installation).
Clear the DTC and test the system for normal operation. Refer to the warranty policy and procedures manual if an ECM is suspect.

## PINPOINT TEST B : CHECK SPARK PLUG

| TEST CONDITIONS | DETAILS/RESULTS/ACTIONS |
|---|---|

**B1: CHECK SPARK PLUG**

• NOTE: Some spark plug types cannot be regapped and must be replaced.

1 Remove the suspect spark plug(s).
REFER to: Ignition Coil-On-Plug LH (303-07A Engine Ignition - 2.5L NA V6 - AJV6/3.0L NA V6 - AJ27, Removal and Installation) /
Ignition Coil-On-Plug RH (303-07A Engine Ignition - 2.5L NA V6 - AJV6/3.0L NA V6 - AJ27, Removal and Installation).

2 Visually inspect the spark plug for cracks, damage, carbon buildup or wet fouling, check the condition of the ground electrode, the center electrode tip and the spark plug HT contact and confirm that the spark plug gap is correctly set using a wire gauge taking care not to cause damage to the center or ground electrode tips.
REFER to: Specifications (303-07A Engine Ignition - 2.5L NA V6 - AJV6/3.0L NA V6 - AJ27, Specifications).

Is the spark plug condition good, and the spark plug gap is correct ?

**Yes**

Check ignition coil and circuits. See possible sources list for misfire.

**No**

Install a new spark plug(s) as required.
REFER to: Specifications (303-07A Engine Ignition - 2.5L NA V6 - AJV6/3.0L NA V6 - AJ27, Specifications) /
Ignition Coil-On-Plug LH (303-07A Engine Ignition - 2.5L NA V6 - AJV6/3.0L NA V6 - AJ27, Removal and Installation) /
Ignition Coil-On-Plug RH (303-07A Engine Ignition - 2.5L NA V6 - AJV6/3.0L NA V6 - AJ27, Removal and Installation).
. CLEAR the DTC. TEST the system for normal operation.

GETtheMANUALS.org

# Engine Ignition - 2.5L NA V6 - AJV6 / 3.0L NA V6 - AJ27 - Ignition Coil-On-Plug LH

Removal and Installation

## Removal

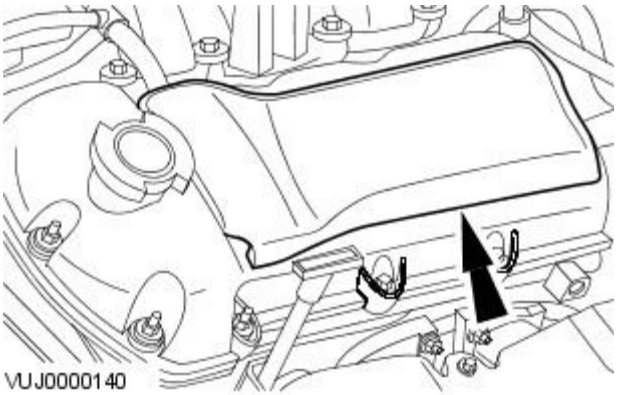


**1.** Remove the ignition coil-on-plug cover.

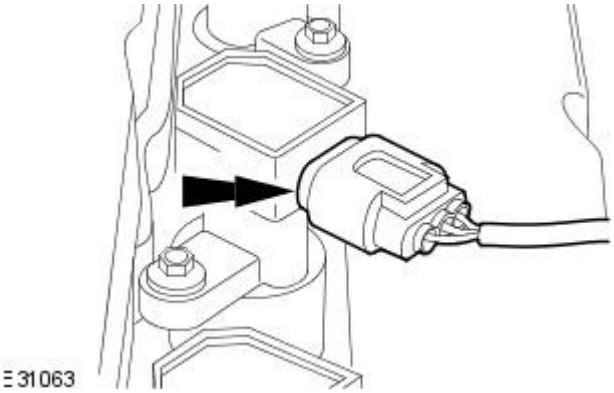


**2.** Disconnect the ignition coil-on-plug electrical connector.

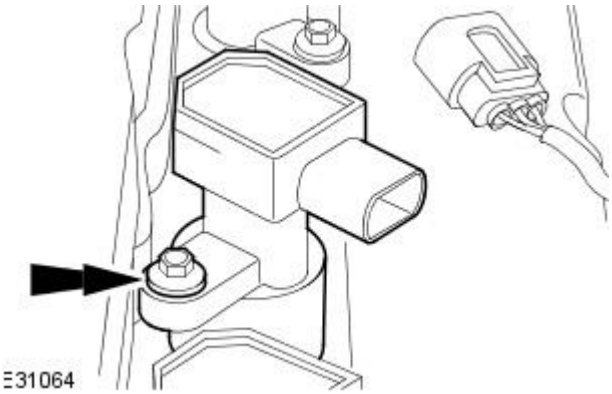


**3.** Remove the ignition coil-on-plug.

## Installation

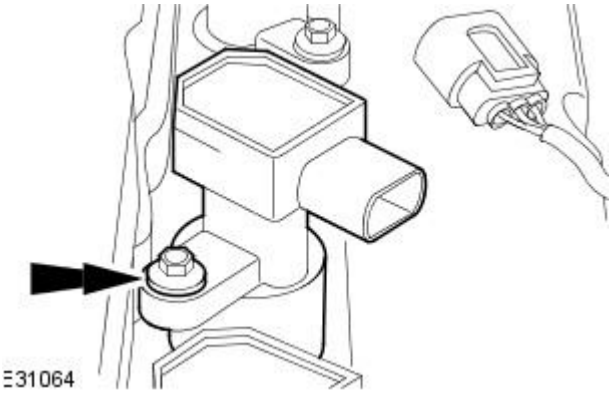


**1.** To install, reverse the removal procedure.

- Tighten to 6 Nm.

GETtheMANUALS.org

# Engine Ignition - 2.5L NA V6 - AJV6 / 3.0L NA V6 - AJ27 - Ignition Coil-On-Plug RH

Removal and Installation

## Removal

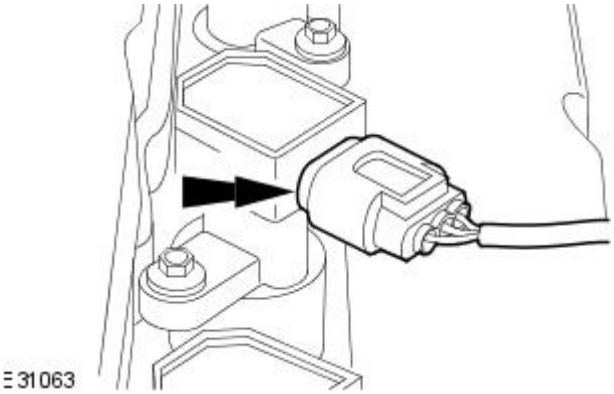


1. Remove the intake manifold. For additional information, refer to Section 303-01A Engine / 303-01B Engine / 303-01C Engine.
2. Disconnect the ignition coil-on-plug electrical connector.

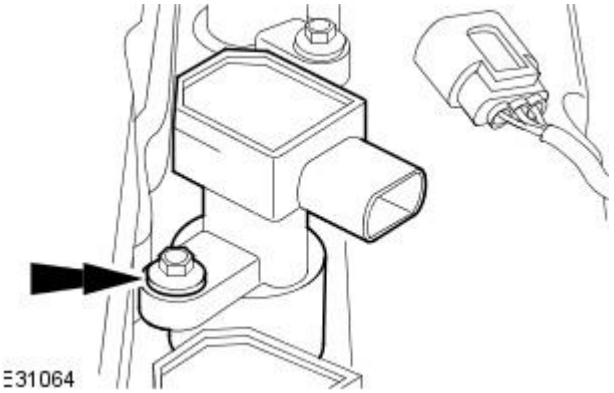


3. Remove the ignition coil-on-plug.

## Installation

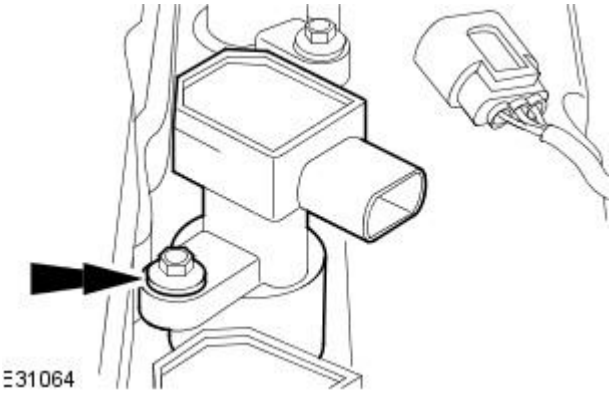


1. To install, reverse the removal procedure.
   - Tighten to 6 Nm.

GETtheMANUALS.org

# Engine Ignition - V8 4.2L Petrol / V8 S/C 4.2L Petrol -

**General Specifications**

| Item | Specification |
|---|---|
| Firing order | 1-2-7-3-4-5-6-8 |
| Spark plug type - Vehicles with supercharger | NGK-IFR-5N10 |
| Spark plug type - Vehicles without supercharger | NGK-IFR-5N10 |
| Spark plug gap | 1 mm |

**Torque Specifications**

| Description | Nm | lb-ft | lb-in |
|---|---|---|---|
| Spark plugs | 27 | 18 | - |
| Ignition coil-on-plug retaining bolts | 5 | - | 44 |

GETtheMANUALS.org

# Engine Ignition - V8 4.2L Petrol/V8 S/C 4.2L Petrol - Engine Ignition

Description and Operation

Component Locations

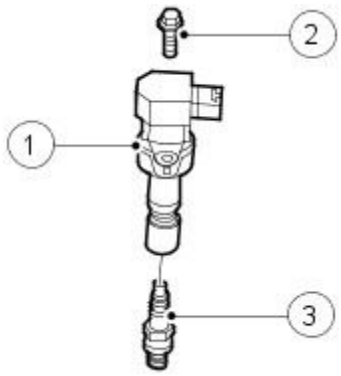


E31029

| Item | Part Number | Description |
|---|---|---|
| 1 | - | Ignition coil-on-plug |
| 2 | - | Ignition coil-on-plug retaining bolt |
| 3 | - | Spark plug |

The right-hand cylinders are numbered 7, 5, 3, 1 and the left-hand cylinders are numbered 8, 6, 4, 2 when viewed from the rear of the engine.

An ignition coil is located on each individual spark plug allowing the ignition timing to be adjusted independently.

The crankshaft position (CKP) sensor signal is the basis for ignition timing calculations. The alternating voltage signal from the CKP sensor is converted to a digital signal by the engine control module (ECM). This digital signal is then used to position the closing time of the primary circuit of the ignition coil. The effective range for ignition timing control is increased to the fact that there are no rotating parts.

On the basis of engine speed and load inputs, the ECM determines the ignition timing. This function also takes other inputs into consideration such as engine temperature, throttle position, knock control, camshaft position, traction control and electronic transmission control inputs.

This ignition system enables the customer to drive the vehicle home if an ignition coil or ignition coil wiring failure occurs. In the event of a wiring failure between the ECM and the ignition coil, the ignition coil will fail instead of the ignition coil fuse blowing, which will allow the remaining ignition coils to continue to function and the engine to limp home.

GETtheMANUALS.org

# Engine Ignition - V8 4.2L Petrol/V8 S/C 4.2L Petrol - Engine IgnitionVIN Range: M45255->N52047

Diagnosis and Testing

1. **1.** Verify the customer concern by operating the system.
2. **2.** Visually inspect for obvious signs of mechanical or electrical damage.
3. **3.** If an obvious cause for an observed or reported concern is found, correct the cause (if possible) before proceeding to the next step.
4. **4.** If the concern is not visually evident, refer to the Symptom Chart.

**Related Faults/Codes**

| Symptom | Possible Sources | Action |
|---|---|---|
| DTC P0300 Random multiple cylinder misfire detected. DTC P0301 to P0308: Misfire at cylinders 1 to 8 | * Poor cylinder compression.<br>* Damaged or worn piston rings.<br>* Inlet/exhaust valve stuck open/closed.<br>* Worn camshaft.<br>* Damaged cylinder head gasket.<br>* Spark plug fouled/incorrect gap. | * Refer to REFER to Section 303-01A Engine / 303-01B Engine / 303-01C Engine. |
| | * Fuel delivery pressure high/low.<br>* Faulty injector (inoperative/leaking).<br>* Fuel injector continuously open.<br>* Fuel contamination.<br>* Fuel injector circuit fault. | * Refer to REFER to Section 303-04A Fuel Charging and Controls / 303-04B Fuel Charging and Controls / 303-04C Fuel Charging and Controls / 303-04D Fuel Charging and Controls - Turbocharger. |
| | * Damaged ignition coil.<br>* Damaged electrical harness/connection.<br>* Damaged spark plug. | * Refer to the Symptom Chart. |

**Symptom Chart**

| Symptom | Possible Sources | Action |
|---|---|---|
| DTC P0351, P0353, P0355, P0357: Ignition coils 1A, 2A, 3A or 4A primary circuit malfunctions. | * Ignition coil open/short circuit.<br>* Ignition coil insulation breakdown.<br>* Damaged harness.<br>* Connector pins bent or corroded.<br>* Damaged ignition circuit ground.<br>* Damaged engine control module (ECM). | * GO to "Pinpoint Test A" for individual DTC. |
| DTC P0352, P0354, P0356, P0358: Ignition coils 1B, 2B, 3B or 4B primary circuit malfunctions. | * Ignition coil open/short circuit.<br>* Ignition coil insulation breakdown.<br>* Damaged harness.<br>* Connector pins bent or corroded.<br>* Damaged ignition circuit ground fault.<br>* Damaged ECM. | * GO to "Pinpoint Test A" for individual DTC. |
| DTC P1367: All right-hand bank ignition coils, primary circuit malfunctions (1A, 2A, 3A, 4A). | * Ignition coil open/short circuit.<br>* Ignition coil insulation breakdown.<br>* Damaged harness.<br>* Connector pins bent or corroded.<br>* Damaged ignition circuit ground.<br>* Damaged ECM. | * GO to "Pinpoint Test A" for individual DTC. |
| DTC P1368: All left-hand bank ignition coils, primary circuit malfunctions (1B, 2B, 3B, 4B). | * Ignition coil open/short circuit.<br>* Ignition coil insulation breakdown.<br>* Damaged harness.<br>* Connector pins bent or corroded.<br>* Damaged ignition circuit ground fault.<br>* Damaged ECM. | * GO to "Pinpoint Test A" for individual DTC. |

GETtheMANUALS.org

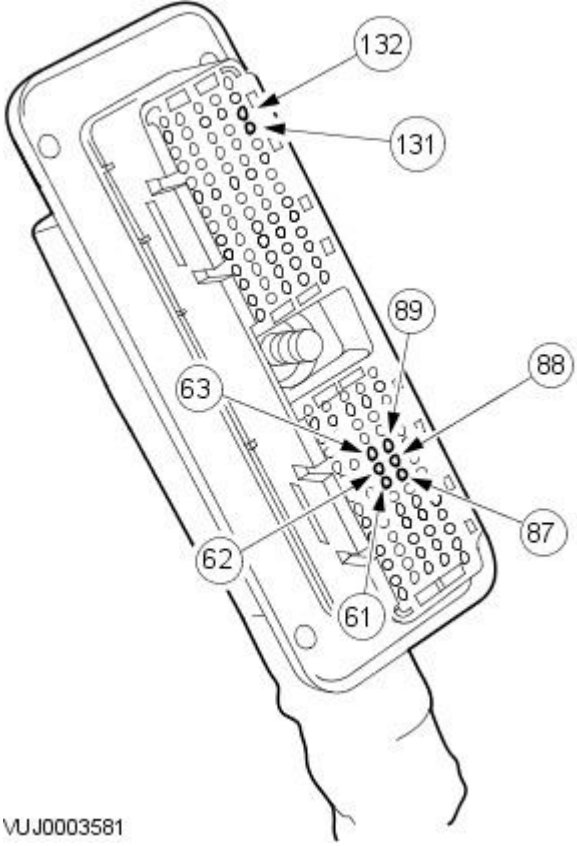


**Powertrain Control Module Harness Electrical Connector**

| Pin Number | Circuit Function | Circuit Color |
|---|---|---|
| 61 | 1B ignition coil trigger | Green/White |
| 62 | 2B ignition coil trigger | Green/White |
| 63 | 3B ignition coil trigger | Green/Red |
| 64 | 4B ignition coil trigger | Yellow/Red |
| 87 | 1A ignition coil trigger | Green/Blue |
| 88 | 2A ignition coil trigger | Yellow |
| 89 | 3A ignition coil trigger | Yellow/Red |
| 90 | 4A ignition coil trigger | Green/Red |

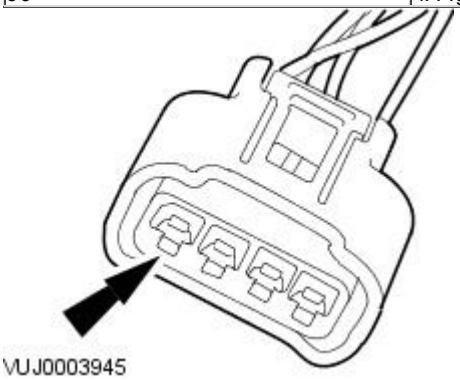


**1A, 2A, 3A, 4A Ignition Coil Harness Electrical Connectors**

| Pin Number | Circuit Function | Circuit Color |
|---|---|---|
| 1 | Ignition coil voltage supply | Red/White |
| 2 | Ignition coil diagnostic signal | 1A and 4A - Green/Black. 2A and 3A - Yellow/Black |
| 3 | Ignition coil ground supply | Black |
| 4 | Ignition coil trigger | 1A - Green/Blue, 2A - Yellow, 3A - Yellow/Red, 4A - Green/Red |

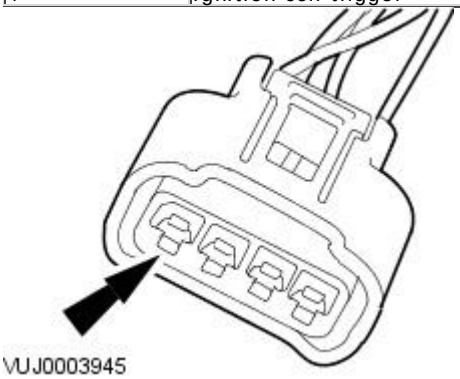


**1B, 2B, 3B, 4B Ignition Coil Harness Electrical Connectors**

| Pin Number | Circuit Function | Circuit Color |
|---|---|---|
| 1 | Ignition coil voltage supply | Red/White |
| 2 | Ignition coil diagnostic signal | 1B and 4B - Yellow/Black. 2B and 3B - Green/Black |
| 3 | Ignition coil ground supply | Black |
| 4 | Ignition coil trigger | 1B and 2B - Green/White, 3B - Green/Red, 4B - Yellow/Red |

GETTHEMANUALS.org

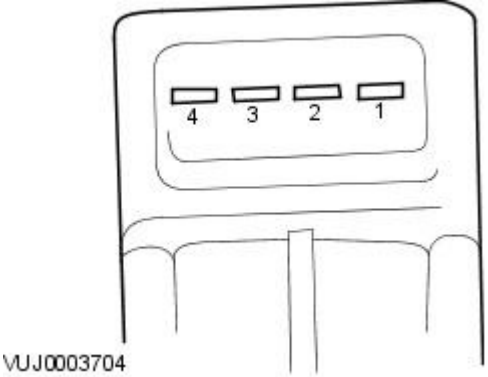


**1A, 2A, 3A, 4A, 1B, 2B, 3B, 4B Ignition Coils**

| Pin Number | Circuit Function |
|---|---|
| 1 | Ignition coil voltage supply |
| 2 | Ignition coil diagnostic signal |
| 3 | Ignition coil ground supply |
| 4 | Ignition coil trigger |

## PINPOINT TEST A : IGNITION COILS — P0351, P0352, P0353, P0354, P0355, P0356, P0357, P0358, P1367, P1368

• NOTE: Unless multiple cylinder misfires are apparent, only one circuit will normally need to be tested. The DTC set will indicate which cylinder is misfiring.

| TEST CONDITIONS | DETAILS/RESULTS/ACTIONS |
|---|---|
| **A1: CHECK COIL FUNCTION BY SUBSTITUTION** | |
| | 1 Replace the suspected faulty coil with a good one. |
| | 2 CLEAR the DTC. TEST the system for normal operation. |
| | Does the same DTC reoccur? The DTC will indicate if the same cylinder is misfiring.<br>**Yes**<br>GO to A2.<br>**No**<br>CLEAR the DTC. TEST the system for normal operation. |
| **A2: CHECK THE IGNITION COIL SUPPLY VOLTAGE CIRCUIT** | |
| | 1 Disconnect the relevant right-hand bank ignition coil electrical connector(s). |
| | 2 Turn the ignition switch to the ON position. |
| | 3 Measure the voltage between:<br>• Cyl 1A. PI002 pin 1, (RW) and GROUND.<br>• Cyl 2A. PI003 pin 1, (RW) and GROUND.<br>• Cyl 3A. PI004 pin 1, (RW) and GROUND.<br>• Cyl 4A. PI005 pin 1, (RW) and GROUND. |
| | 4 Disconnect the relevant left-hand bank ignition coil electrical connector(s). |
| | 5 Measure the voltage between:<br>• Cyl 1B. PI006 pin 1, (RW) and GROUND.<br>• Cyl 2B. PI007 pin 1, (RW) and GROUND.<br>• Cyl 3B. PI008 pin 1, (RW) and GROUND.<br>• Cyl 4B. PI009 pin 1, (RW) and GROUND. |
| | Is the voltage greater than 10.5 Volts?<br>**Yes**<br>GO to A3.<br>**No**<br>REPAIR the relevant ignition coil supply voltage circuit. For additional information, refer to wiring digrams. CLEAR the DTCs. TEST the system for normal operation. |
| **A3: CHECK THE IGNITION COIL GROUND CIRCUIT** | |
| | 1 Switch the ignition to the OFF position. |
| | 2 Disconnect the relevant right-hand bank ignition coil electrical connector(s). |
| | 3 Measure the resistance between:<br>• Cyl 1A. PI002 pin 3, (B) and GROUND.<br>• Cyl 2A. PI003 pin 3, (B) and GROUND.<br>• Cyl 3A. PI004 pin 3, (B) and GROUND.<br>• Cyl 4A. PI005 pin 3, (B) and GROUND. |
| | 4 Disconnect the relevant left-hand bank ignition coil electrical connector(s). |
| | 5 Measure the resistance between:<br>• Cyl 1B. PI006 pin 3, (B) and GROUND.<br>• Cyl 2B. PI007 pin 3, (B) and GROUND.<br>• Cyl 3B. PI008 pin 3, (B) and GROUND.<br>• Cyl 4B. PI009 pin 3, (B) and GROUND. |
| | Is the resistance less than 5 ohms?<br>**Yes**<br>GO to A4.<br>**No**<br>REPAIR the relevant ignition coil ground circuit. For additional information, refer to wiring diagrams. CLEAR the DTCs. TEST the system for normal operation. |
| **A4: CHECK THE CONTINUITY OF THE IGNITION COIL TRIGGER SUPPLY CIRCUIT** | |
| | 1 Disconnect the ECM electrical connector PI001. |

GET thcMANUALS.org

| | |
|---|---|
| | 2 Check the continuity of the ignition coil trigger supply circuit between the relevant ignition coil electrical connector(s) and the ECM electrical connector:<br><br>● Cyl 1A. PI002 pin 4, (GU) and PI001 pin 87, (GU)<br>● Cyl 2A. PI003 pin 4, (Y) and PI001 pin 88, (Y)<br>● Cyl 3A. PI004 pin 4, (YR) and PI001 pin 89, (YR)<br>● Cyl 4A. PI005 pin 4, (GR) and PI001 pin 90, (GR)<br>● Cyl 1B. PI006 pin 4, (GW) and PI001 pin 61, (GW)<br>● Cyl 2B. PI007 pin 4, (GW) and PI001 pin 62, (GW)<br>● Cyl 3B. PI008 pin 4, (GR) and PI001 pin 63, (GR)<br>● Cyl 4B. PI009 pin 4, (YR) and PI001 pin 64, (YR) |
| | Is the resistance less than 5 ohms?<br>**Yes**<br>GO to A5.<br>**No**<br>REPAIR the ignition coil trigger supply circuit between the relevant ignition coil electrical connector(s) and the ECM electrical connector. CLEAR the DTCs. TEST the system for normal operation. |
| **A5: CHECK THE CONTINUITY BETWEEN THE IGNITION COIL AND THE ECM** | |
| | 1 Check the continuity of the ignition coil diagnostic signal circuit, between the ignition coil electrical connector(s) and the ECM electrical connector:<br><br>● Cyl 1A. PI002 pin 2, (GB) and PI001 pin 131, (GB)<br>● Cyl 2A. PI003 pin 2, (YB) and PI001 pin 132, (YB)<br>● Cyl 3A. PI004 pin 2, (YB) and PI001 pin 132, (YB)<br>● Cyl 4A. PI005 pin 2, (GB) and PI001 pin 131, (GB)<br>● Cyl 1B. PI006 pin 2, (YB) and PI001 pin 132, (YB)<br>● Cyl 2B. PI007 pin 2, (GB) and PI001 pin 131, (GB)<br>● Cyl 3B. PI008 pin 2, (GB) and PI001 pin 131, (GB)<br>● Cyl 4B. PI009 pin 2, (YB) and PI001 pin 132, (YB) |
| | Is the resistance less than 5 Ohms?<br>**Yes**<br>INSTALL a new ECM. For additional information refer to REFER to Section 303-14A Electronic Engine Controls / 303-14B Electronic Engine Controls / 303-14C Electronic Engine Controls. Before replacing a ECM, contact Dealer technical support. CLEAR the DTCs. TEST the system for normal operation.<br>**No**<br>REPAIR the circuit between the ignition coil electrical connector(s) and the ECM electrical connector. CLEAR the DTCs. TEST the system for normal operation. |

GETtheMANUALS.org

# Engine Ignition - V8 4.2L Petrol/V8 S/C 4.2L Petrol - Engine IgnitionVIN Range: N52048->N99999

Diagnosis and Testing

## Overview

There are changes to the engine management system (EMS) for 2006 my, the most obvious of which will be the change to 7-digit diagnostic trouble codes (DTCs) from the familiar 5-digit.

Refer to the DTC index in this section for guidance on how to use these codes with the Jaguar approved diagnostic system or a scan tool.

## Inspection and Verification

1. **1.** Verify the customer concern.
2. **2.** Visually inspect for obvious signs of mechanical or electrical damage.

**Visual inspection**

| Mechanical | Electrical |
|---|---|
| • Engine oil level<br>• Cooling system coolant level<br>• Fuel level<br>• Fuel contamination/grade/quality | • Fuses<br>• Wiring harness<br>• Loose or corroded electrical connectors<br>• Ignition coils<br>• Sensor(s)<br>• Engine control module (ECM)<br>• Transmission control module (TCM) |

3. **3.** If an obvious cause for an observed or reported concern is found, correct the cause (if possible) before proceeding to the next step.
4. **4.** If the cause is not visually evident use the Jaguar approved diagnostic system or a scan tool to retrieve the fault codes before proceeding to the diagnostic trouble code (DTC) Index.

## Symptom Chart

| Symptom | Possible source | Action |
|---|---|---|
| Engine cranks, but does not fire | • Engine breather system disconnected/restricted<br>• Ignition system<br>• Fuel system<br>• Harness<br>• Crankshaft position (CKP) sensor<br>• ECM fault | Check the engine breather system,<br>REFER to: Engine Emission Control - VIN Range: N80181->R99999 (303-08A Engine Emission Control - V8 4.2L Petrol/V8 S/C 4.2L Petrol/2.5L NA V6 - AJV6/3.0L NA V6 - AJ27, Diagnosis and Testing).<br>For ignition system tests, GO to Pinpoint Test A. Check the fuel pressure,<br>REFER to: Fuel Tank and Lines - V8 4.2L Petrol/V8 S/C 4.2L Petrol/2.5L NA V6 - AJV6/3.0L NA V6 - AJ27, VIN Range: N80181->R99999 (310-01 Fuel Tank and Lines, Diagnosis and Testing).<br>For CKP tests,<br>REFER to: Electronic Engine Controls - VIN Range: N80181->R99999 (303-14B Electronic Engine Controls - V8 4.2L Petrol/V8 S/C 4.2L Petrol, Diagnosis and Testing).<br>Refer to the warranty policy and procedures manual if an ECM is suspect. |
| Engine cranks and fires, but will not start | • Evaporative emissions purge valve<br>• Fuel pump<br>• Spark plugs<br>• HT short to ground (tracking) check rubber boots for cracks/damage<br>• Ignition coil failure(s)<br>• Harness | For purge valve tests,<br>REFER to: Evaporative Emissions - VIN Range: N52048->N99999 (303-13 Evaporative Emissions, Diagnosis and Testing).<br>Check the fuel pressure,<br>REFER to: Fuel Tank and Lines - V8 4.2L Petrol/V8 S/C 4.2L Petrol/2.5L NA V6 - AJV6/3.0L NA V6 - AJ27, VIN Range: N80181->R99999 (310-01 Fuel Tank and Lines, Diagnosis and Testing).<br>For spark plug tests, GO to Pinpoint Test B. For ignition coil circuit tests, GO to Pinpoint Test A. |
| Difficult to start cold | • Coolant anti-freeze content<br>• Battery<br>• CKP sensor<br>• Exhaust gas recirculation (EGR) valve stuck open<br>• Fuel pump<br>• Purge valve | Check the anti-freeze content. For battery information,<br>REFER to: Battery (414-01 Battery, Mounting and Cables, Diagnosis and Testing).<br>For CKP sensor tests,<br>REFER to: Electronic Engine Controls - VIN Range: N80181->R99999 (303-14B Electronic Engine Controls - V8 4.2L Petrol/V8 S/C 4.2L Petrol, Diagnosis and Testing).<br>For EGR valve tests,<br>REFER to: Engine Emission Control - VIN Range: N80181->R99999 (303-08A Engine Emission Control - V8 4.2L Petrol/V8 S/C 4.2L Petrol/2.5L NA V6 - AJV6/3.0L NA V6 - AJ27, Diagnosis and Testing).<br>Check the fuel pressure,<br>REFER to: Fuel Tank and Lines - V8 4.2L Petrol/V8 S/C 4.2L Petrol/2.5L NA V6 - AJV6/3.0L NA V6 - AJ27, VIN Range: N80181->R99999 (310-01 Fuel Tank and Lines, Diagnosis and Testing).<br>For purge valve tests,<br>REFER to: Evaporative Emissions - VIN Range: N52048->N99999 (303-13 Evaporative Emissions, Diagnosis and Testing). |

GETtheMANUALS.org

| Symptom | Possible source | Action |
|---|---|---|
| Difficult to start hot | • Injector leak<br>• Engine fuel temperature (EFT) sensor<br>• Intake air temperature (IAT) sensor<br>• Mass air flow (MAF) sensor<br>• Purge valve<br>• Fuel pump<br>• Ignition system<br>• EGR valve stuck open | For fuel injectors,<br>REFER to: Fuel Injectors (303-04B Fuel Charging and Controls - V8 4.2L Petrol/V8 S/C 4.2L Petrol, Removal and Installation).<br>For EFT, IAT and MAF sensor tests,<br>REFER to: Electronic Engine Controls - VIN Range: N80181->R99999 (303-14B Electronic Engine Controls - V8 4.2L Petrol/V8 S/C 4.2L Petrol, Diagnosis and Testing).<br>For purge valve tests,<br>REFER to: Evaporative Emissions - VIN Range: N52048->N99999 (303-13 Evaporative Emissions, Diagnosis and Testing).<br>Check the fuel pressure,<br>REFER to: Fuel Tank and Lines - V8 4.2L Petrol/V8 S/C 4.2L Petrol/2.5L NA V6 - AJV6/3.0L NA V6 - AJ27, VIN Range: N80181->R99999 (310-01 Fuel Tank and Lines, Diagnosis and Testing).<br>For ignition coil circuit tests, GO to Pinpoint Test A. For EGR valve tests,<br>REFER to: Engine Emission Control - VIN Range: N80181->R99999 (303-08A Engine Emission Control - V8 4.2L Petrol/V8 S/C 4.2L Petrol/2.5L NA V6 - AJV6/3.0L NA V6 - AJ27, Diagnosis and Testing). |
| Difficult to start after hot soak (vehicle standing after engine has reached operating temperature) | • Injector leak<br>• EFT sensor<br>• IAT sensor<br>• MAF sensor<br>• Purge valve<br>• Fuel pump<br>• Ignition system<br>• EGR valve stuck open | For fuel injectors,<br>REFER to: Fuel Injectors (303-04B Fuel Charging and Controls - V8 4.2L Petrol/V8 S/C 4.2L Petrol, Removal and Installation).<br>For EFT, IAT and MAF sensor tests,<br>REFER to: Electronic Engine Controls - VIN Range: N80181->R99999 (303-14B Electronic Engine Controls - V8 4.2L Petrol/V8 S/C 4.2L Petrol, Diagnosis and Testing).<br>For purge valve tests,<br>REFER to: Evaporative Emissions - VIN Range: N52048->N99999 (303-13 Evaporative Emissions, Diagnosis and Testing).<br>Check the fuel pressure,<br>REFER to: Fuel Tank and Lines - V8 4.2L Petrol/V8 S/C 4.2L Petrol/2.5L NA V6 - AJV6/3.0L NA V6 - AJ27, VIN Range: N80181->R99999 (310-01 Fuel Tank and Lines, Diagnosis and Testing).<br>For ignition coil circuit tests, GO to Pinpoint Test A. For EGR valve tests,<br>REFER to: Engine Emission Control - VIN Range: N80181->R99999 (303-08A Engine Emission Control - V8 4.2L Petrol/V8 S/C 4.2L Petrol/2.5L NA V6 - AJV6/3.0L NA V6 - AJ27, Diagnosis and Testing). |
| Engine stalls soon after start | • Breather system disconnected/restricted<br>• ECM relay<br>• Harness<br>• MAF sensor<br>• Ignition system<br>• Air filter restricted<br>• Fuel lines<br>• FRP sensor<br>• Air leakage | For breather system,<br>REFER to: Engine Emission Control - VIN Range: N80181->R99999 (303-08A Engine Emission Control - V8 4.2L Petrol/V8 S/C 4.2L Petrol/2.5L NA V6 - AJV6/3.0L NA V6 - AJ27, Diagnosis and Testing).<br>For ECM relay and MAF sensor tests,<br>REFER to: Electronic Engine Controls - VIN Range: N80181->R99999 (303-14B Electronic Engine Controls - V8 4.2L Petrol/V8 S/C 4.2L Petrol, Diagnosis and Testing).<br>For ignition coil circuit tests, GO to Pinpoint Test A. For air filter information,<br>REFER to: Intake Air Distribution and Filtering - VIN Range: N52048->N99999 (303-12B Intake Air Distribution and Filtering - V8 4.2L Petrol/V8 S/C 4.2L Petrol, Diagnosis and Testing).<br>Check the fuel lines,<br>REFER to: Fuel Tank and Lines - V8 4.2L Petrol/V8 S/C 4.2L Petrol/2.5L NA V6 - AJV6/3.0L NA V6 - AJ27, VIN Range: N80181->R99999 (310-01 Fuel Tank and Lines, Diagnosis and Testing).<br>For FRP sensor tests,<br>REFER to: Electronic Engine Controls - VIN Range: N80181->R99999 (303-14B Electronic Engine Controls - V8 4.2L Petrol/V8 S/C 4.2L Petrol, Diagnosis and Testing).<br>For intake system information,<br>REFER to: Intake Air Distribution and Filtering - VIN Range: N52048->N99999 (303-12B Intake Air Distribution and Filtering - V8 4.2L Petrol/V8 S/C 4.2L Petrol, Diagnosis and Testing). |
| Engine hesitates/poor acceleration | • Fuel pump<br>• Injector leak<br>• Fuel pressure<br>• Fuel lines<br>• Air leakage<br>• Throttle position (TP) sensors<br>• Throttle motor<br>• Ignition system<br>• EGR valve stuck open<br>• HO2 sensors<br>• Transmission malfunction<br>• Restricted pedal travel (carpet, etc)<br>• Accelerator pedal position (APP) sensor | Check the fuel pressure, check the fuel lines,<br>REFER to: Fuel Tank and Lines - V8 4.2L Petrol/V8 S/C 4.2L Petrol/2.5L NA V6 - AJV6/3.0L NA V6 - AJ27, VIN Range: N80181->R99999 (310-01 Fuel Tank and Lines, Diagnosis and Testing).<br>For intake system,<br>REFER to: Intake Air Distribution and Filtering - VIN Range: N52048->N99999 (303-12B Intake Air Distribution and Filtering - V8 4.2L Petrol/V8 S/C 4.2L Petrol, Diagnosis and Testing).<br>For TP sensor and throttle motor tests,<br>REFER to: Electronic Engine Controls - VIN Range: N80181->R99999 (303-14B Electronic Engine Controls - V8 4.2L Petrol/V8 S/C 4.2L Petrol, Diagnosis and Testing).<br>For ignition coil circuit tests, GO to Pinpoint Test A. For EGR valve tests,<br>REFER to: Engine Emission Control - VIN Range: N80181->R99999 (303-08A Engine Emission Control - V8 4.2L Petrol/V8 S/C 4.2L Petrol/2.5L NA V6 - AJV6/3.0L NA V6 - AJ27, Diagnosis and Testing).<br>Check for DTCs relating to HO2 sensors. Refer to the DTC index |

GETtheMANUALS.com

| Symptom | Possible source | Action |
|---|---|---|
| | | for pinpoint tests for DTC set. For transmission information, REFER to: Diagnostic Strategy - VIN Range: N52048->N99999 (307-01 Automatic Transmission/Transaxle, Diagnosis and Testing).<br>Check the accelerator pedal travel. For APP sensor tests, REFER to: Electronic Engine Controls - VIN Range: N80181->R99999 (303-14B Electronic Engine Controls - V8 4.2L Petrol/V8 S/C 4.2L Petrol, Diagnosis and Testing). |
| Engine backfires | • Fuel pump<br>• Fuel lines<br>• Air leakage<br>• MAF sensor<br>• HO2 sensors<br>• Ignition system<br>• Sticking variable camshaft timing (VCT) hub<br>• APP sensor | Check the fuel pressure, check the fuel lines, REFER to: Fuel Tank and Lines - V8 4.2L Petrol/V8 S/C 4.2L Petrol/2.5L NA V6 - AJV6/3.0L NA V6 - AJ27, VIN Range: N80181->R99999 (310-01 Fuel Tank and Lines, Diagnosis and Testing).<br>For intake system, REFER to: Intake Air Distribution and Filtering - VIN Range: N52048->N99999 (303-12B Intake Air Distribution and Filtering - V8 4.2L Petrol/V8 S/C 4.2L Petrol, Diagnosis and Testing).<br>For MAF sensor tests, REFER to: Electronic Engine Controls - VIN Range: N80181->R99999 (303-14B Electronic Engine Controls - V8 4.2L Petrol/V8 S/C 4.2L Petrol, Diagnosis and Testing).<br>Check for DTCs relating to HO2 sensors. Refer to the DTC index for pinpoint tests for DTC set. For ignition coil circuit tests, GO to Pinpoint Test A. For VCT information, REFER to: Electronic Engine Controls - VIN Range: N80181->R99999 (303-14B Electronic Engine Controls - V8 4.2L Petrol/V8 S/C 4.2L Petrol, Diagnosis and Testing).<br>For APP sensor tests, REFER to: Electronic Engine Controls - VIN Range: N80181->R99999 (303-14B Electronic Engine Controls - V8 4.2L Petrol/V8 S/C 4.2L Petrol, Diagnosis and Testing). |
| Engine surges | • Fuel pump<br>• Fuel lines<br>• MAF sensor<br>• Harness<br>• TP sensors<br>• Throttle motor<br>• Ignition system | Check the fuel pressure, check the fuel lines, REFER to: Fuel Tank and Lines - V8 4.2L Petrol/V8 S/C 4.2L Petrol/2.5L NA V6 - AJV6/3.0L NA V6 - AJ27, VIN Range: N80181->R99999 (310-01 Fuel Tank and Lines, Diagnosis and Testing).<br>For MAF, TP sensor and throttle motor tests, REFER to: Electronic Engine Controls - VIN Range: N80181->R99999 (303-14B Electronic Engine Controls - V8 4.2L Petrol/V8 S/C 4.2L Petrol, Diagnosis and Testing).<br>For ignition coil circuit tests, GO to Pinpoint Test A. |
| Engine detonates/knocks | • Knock sensor (KS) circuit malfunction<br>• Fuel pump<br>• Fuel lines<br>• FRP sensor<br>• MAF sensor<br>• HO2 sensors<br>• Air leakage<br>• Sticking VCT hub<br>• BARO sensor malfunction (internal ECM fault) | For KS circuit tests, REFER to: Electronic Engine Controls - VIN Range: N80181->R99999 (303-14B Electronic Engine Controls - V8 4.2L Petrol/V8 S/C 4.2L Petrol, Diagnosis and Testing).<br>Check the fuel pressure, check the fuel lines, REFER to: Fuel Tank and Lines - V8 4.2L Petrol/V8 S/C 4.2L Petrol/2.5L NA V6 - AJV6/3.0L NA V6 - AJ27, VIN Range: N80181->R99999 (310-01 Fuel Tank and Lines, Diagnosis and Testing).<br>For FRP, MAF and HO2 sensor tests, REFER to: Electronic Engine Controls - VIN Range: N80181->R99999 (303-14B Electronic Engine Controls - V8 4.2L Petrol/V8 S/C 4.2L Petrol, Diagnosis and Testing).<br>For intake system, REFER to: Intake Air Distribution and Filtering - VIN Range: N52048->N99999 (303-12B Intake Air Distribution and Filtering - V8 4.2L Petrol/V8 S/C 4.2L Petrol, Diagnosis and Testing).<br>Check DTCs for VCT range/performance fault. For VCT information, REFER to: Electronic Engine Controls - VIN Range: N80181->R99999 (303-14B Electronic Engine Controls - V8 4.2L Petrol/V8 S/C 4.2L Petrol, Diagnosis and Testing).<br>Refer to the warranty policy and procedures manual if an ECM is suspect. |
| No throttle response | • APP sensor malfunction<br>• TP sensors<br>• Throttle motor | For APP, TP sensor and throttle motor tests, REFER to: Electronic Engine Controls - VIN Range: N80181->R99999 (303-14B Electronic Engine Controls - V8 4.2L Petrol/V8 S/C 4.2L Petrol, Diagnosis and Testing). |
| Poor throttle response | • APP sensor malfunction<br>• TP sensors<br>• ECT sensor<br>• MAF sensor<br>• Transmission malfunction<br>• Traction control event<br>• Air leakage<br>• Breather system disconnected/restricted | For APP, TP, ECT and MAF sensor tests, REFER to: Electronic Engine Controls - VIN Range: N80181->R99999 (303-14B Electronic Engine Controls - V8 4.2L Petrol/V8 S/C 4.2L Petrol, Diagnosis and Testing).<br>For transmission information, REFER to: Diagnostic Strategy - VIN Range: N52048->N99999 (307-01 Automatic Transmission/Transaxle, Diagnosis and Testing).<br>For intake system, REFER to: Intake Air Distribution and Filtering - VIN Range: N52048->N99999 (303-12B Intake Air Distribution and Filtering - V8 4.2L Petrol/V8 S/C 4.2L Petrol, Diagnosis and Testing).<br>For breather system information, REFER to: Engine Emission Control - VIN Range: N80181->R99999 (303-08A Engine Emission Control - V8 4.2L Petrol/V8 S/C 4.2L Petrol/2.5L NA V6 - AJV6/3.0L NA V6 - AJ27, Diagnosis and Testing). |

## DTC Index

GETtheMANUALS.org

• NOTE: Generic scan tools may not read the codes listed, or may read only 5-digit codes. Match the 5 digits from the scan tool to the first 5 digits of the 7-digit code listed to identify the fault (the last 2 digits give extra information read by the manufacturer-approved diagnostic

system).

| DTC | Description | Possible causes | Action |
|---|---|---|---|
| P035100 | Cylinder 1 ignition coil primary/secondary circuit | • ECM to ignition module/coil drive circuit: short circuit to ground, high resistance<br>• Ignition module/coil ground circuit: high resistance<br>• Ignition module/coil supply circuit: open circuit (including relay) | For ignition coil tests, GO to Pinpoint Test A. |
| P035200 | Cylinder 2 ignition coil primary/secondary circuit | • ECM to ignition module/coil drive circuit: short circuit to ground, high resistance<br>• Ignition module/coil ground circuit: high resistance<br>• Ignition module/coil supply circuit: open circuit (including relay) | For ignition coil tests, GO to Pinpoint Test A. |
| P035300 | Cylinder 3 ignition coil primary/secondary circuit | • ECM to ignition module/coil drive circuit: short circuit to ground, high resistance<br>• Ignition module/coil ground circuit: high resistance<br>• Ignition module/coil supply circuit: open circuit (including relay) | For ignition coil tests, GO to Pinpoint Test A. |
| P035400 | Cylinder 4 ignition coil primary/secondary circuit | • ECM to ignition module/coil drive circuit: short circuit to ground, high resistance<br>• Ignition module/coil ground circuit: high resistance<br>• Ignition module/coil supply circuit: open circuit (including relay) | For ignition coil tests, GO to Pinpoint Test A. |
| P035500 | Cylinder 5 ignition coil primary/secondary circuit | • ECM to ignition module/coil drive circuit: short circuit to ground, high resistance<br>• Ignition module/coil ground circuit: high resistance<br>• Ignition module/coil supply circuit: open circuit (including relay) | For ignition coil tests, GO to Pinpoint Test A. |
| P035600 | Cylinder 6 ignition coil primary/secondary circuit | • ECM to ignition module/coil drive circuit: short circuit to ground, high resistance<br>• Ignition module/coil ground circuit: high resistance<br>• Ignition module/coil supply circuit: open circuit (including relay) | For ignition coil tests, GO to Pinpoint Test A. |
| P035700 | Cylinder 7 ignition coil primary/secondary circuit | • ECM to ignition module/coil drive circuit: short circuit to ground, high resistance<br>• Ignition module/coil ground circuit: high resistance<br>• Ignition module/coil supply circuit: open circuit (including relay) | For ignition coil tests, GO to Pinpoint Test A. |
| P035800 | Cylinder 8 ignition coil primary/secondary circuit | • ECM to ignition module/coil drive circuit: short circuit to ground, high resistance<br>• Ignition module/coil ground circuit: high resistance<br>• Ignition module/coil supply circuit: open circuit (including relay) | For ignition coil tests, GO to Pinpoint Test A. |
| P131500 | Persistent misfire | • Spark plug failure/fouled/incorrect gap<br>• Ignition coil failure<br>• ECM to ignition coil primary circuit fault (cylinder misfire detected DTC also flagged)<br>• Fuel delivery pressure low<br>• Fuel injector circuit fault(s) (injector DTCs also flagged)<br>• Cylinder compression low | For spark plug tests, GO to Pinpoint Test B. For ignition coil circuit tests, GO to Pinpoint Test A. Check the fuel pressure, REFER to: Fuel Tank and Lines - V8 4.2L Petrol/V8 S/C 4.2L Petrol/2.5L NA V6 - AJV6/3.0L NA V6 - AJ27, VIN Range: N80181->R99999 (310-01 Fuel Tank and Lines, Diagnosis and Testing).<br>For injector circuit tests,<br>REFER to: Fuel Charging and Controls - VIN Range: N52048->N99999 (303-04B Fuel Charging and Controls - V8 4.2L Petrol/V8 S/C 4.2L Petrol, Diagnosis and Testing).<br>Check the cylinder compressions,<br>REFER to: Engine (303-01B Engine - V8 4.2L Petrol/V8 S/C 4.2L Petrol, Diagnosis and Testing). |
| P136700 | Ignition amplifier group A | • Ignition monitoring circuit to ECM: open circuit, short circuit to ground, short circuit to power<br>• Ignition module/coils right hand bank ground circuit fault | For ignition coil tests, GO to Pinpoint Test A. |
| P136800 | Ignition amplifier group B | • Ignition monitoring circuit to ECM: open circuit, short circuit to ground, short circuit to power<br>• Ignition module/coils left hand bank ground circuit fault | For ignition coil tests, GO to Pinpoint Test A. |

GETtheMANUALS.org

## Pinpoint Tests

CAUTION: When probing connectors to take measurements in the course of the pinpoint tests, use the adaptor kit, part number 3548-1358-00.

• NOTE: When performing electrical voltage or resistance tests, always use a digital multimeter (DMM) accurate to 3 decimal places, and with an up-to-date calibration certificate. When testing resistance, always take the resistance of the DMM leads into account.

• NOTE: Check and rectify basic faults before beginning diagnostic routines involving pinpoint tests.

### PINPOINT TEST A : IGNITION COIL CIRCUITS

• NOTE: Unless multiple cylinder misfires are apparent, only one circuit will normally need to be tested. The DTC set will indicate which cylinder is misfiring.

| TEST CONDITIONS | DETAILS/RESULTS/ACTIONS |
|---|---|
| **A1: CHECK THE IGNITION COIL SUPPLY VOLTAGE CIRCUIT** | |
| | 1 Disconnect the relevant ignition coil electrical connector: |

| Ignition coil connector |
|---|
| Cylinder 1, PI02 |
| Cylinder 2, PI06 |
| Cylinder 3, PI03 |
| Cylinder 4, PI07 |
| Cylinder 5, PI04 |
| Cylinder 6, PI08 |
| Cylinder 7, PI05 |
| Cylinder 8, PI09 |

2 Key on, engine off.

3 Make sure the ignition relay is energized.

4 Measure the voltage between:

| Ignition coil connector, harness side | Battery |
|---|---|
| Pin 01 | Negative terminal |

Is the voltage less than 10.5 Volts?

**Yes**

REPAIR the relevant ignition coil supply circuit. This circuit includes fuse 30 of the front power distribution box and the ignition relay. For additional information, refer to the wiring diagrams. CLEAR the DTCs and test the system for normal operation.

**No**

GO to A2.

**A2: CHECK THE IGNITION COIL SWITCHING CIRCUITS FOR SHORT CIRCUIT TO GROUND**

1 Key off.

2 Measure the resistance between:

| Ignition coil connector, harness side | Battery |
|---|---|
| Pin 04 | Negative terminal |

Is the resistance less than 10,000 ohms?

**Yes**

REPAIR the short circuit. For additional information, refer to the wiring diagrams. CLEAR the DTCs and test the system for normal operation.

**No**

GO to A3.

**A3: CHECK THE IGNITION COIL SWITCHING CIRCUITS FOR SHORT CIRCUIT TO POWER**

1 Measure the resistance between:

| Ignition coil connector, harness side | Battery |
|---|---|
| Pin 04 | Positive terminal |

Is the resistance less than 10,000 ohms?

**Yes**

REPAIR the short circuit. For additional information, refer to the wiring diagrams. CLEAR the DTCs and test the system for normal operation.

**No**

GO to A4.

**A4: CHECK THE IGNITION COIL MONITOR CIRCUITS FOR SHORT CIRCUIT TO GROUND**

1 Measure the resistance between:

| Ignition coil connector, harness side | Battery |
|---|---|
| Pin 02 | Negative terminal |

Is the resistance less than 10,000 ohms?

**Yes**

REPAIR the short circuit. For additional information, refer to the wiring diagrams. CLEAR the DTCs and test the system for normal operation.

**No**

GO to A5.

**A5: CHECK THE IGNITION COIL MONITOR CIRCUITS FOR SHORT CIRCUIT TO POWER**

1 Measure the resistance between:

| Ignition coil connector, harness side | Battery |
|---|---|
| Pin 02 | Positive terminal |

Is the resistance less than 10,000 ohms?

**Yes**

REPAIR the short circuit. For additional information, refer to the wiring diagrams. CLEAR the DTCs and test the system for normal operation.

**No**

GO to A6.

**A6: CHECK THE IGNITION COIL GROUND CIRCUIT FOR HIGH RESISTANCE**

• NOTE: Unless multiple cylinder misfires are apparent, only one circuit will normally need to be tested. The DTC set will indicate which cylinder is misfiring.

GETtheMANUALS.org

1 Measure the resistance between:

| Cylinder 1 ignition coil connector, harness side | Battery |
|---|---|
| PI02, pin 03 | Negative terminal |
| **Cylinder 2 ignition coil connector, harness side** | **Battery** |
| PI06, pin 03 | Negative terminal |
| **Cylinder 3 ignition coil connector, harness side** | **Battery** |
| PI03, pin 03 | Negative terminal |
| **Cylinder 4 ignition coil connector, harness side** | **Battery** |
| PI07, pin 03 | Negative terminal |
| **Cylinder 5 ignition coil connector, harness side** | **Battery** |
| PI04, pin 03 | Negative terminal |
| **Cylinder 6 ignition coil connector, harness side** | **Battery** |
| PI08, pin 03 | Negative terminal |
| **Cylinder 7 ignition coil connector, harness side** | **Battery** |
| PI05, pin 03 | Negative terminal |
| **Cylinder 8 ignition coil connector, harness side** | **Battery** |
| PI09, pin 03 | Negative terminal |

Is the resistance greater than 5 ohms?

**Yes**

REPAIR the high resistance circuit. For additional information, refer to the wiring diagrams. CLEAR the DTCs and test the system for normal operation.

**No**

GO to A7.

**A7: CHECK THE IGNITION COIL SWITCHING CIRCUITS FOR HIGH RESISTANCE**

• NOTE: Unless multiple cylinder misfires are apparent, only one circuit will normally need to be tested. The DTC set will indicate which cylinder is misfiring.

1 Disconnect the ECM electrical connector, PI300.

2 Measure the resistance between:

| Cylinder 1 ignition coil connector, harness side | ECM connector PI300, harness side |
|---|---|
| PI02, pin 04 | Pin 61 |
| **Cylinder 2 ignition coil connector, harness side** | **ECM connector PI300, harness side** |
| PI06, pin 04 | Pin 60 |
| **Cylinder 3 ignition coil connector, harness side** | **ECM connector PI300, harness side** |
| PI03, pin 04 | Pin 59 |
| **Cylinder 4 ignition coil connector, harness side** | **ECM connector PI300, harness side** |
| PI07, pin 04 | Pin 58 |
| **Cylinder 5 ignition coil connector, harness side** | **ECM connector PI300, harness side** |
| PI04, pin 04 | Pin 57 |
| **Cylinder 6 ignition coil connector, harness side** | **ECM connector PI300, harness side** |
| PI08, pin 04 | Pin 56 |
| **Cylinder 7 ignition coil connector, harness side** | **ECM connector PI300, harness side** |
| PI05, pin 04 | Pin 55 |
| **Cylinder 8 ignition coil connector, harness side** | **ECM connector PI300, harness side** |
| PI09, pin 04 | Pin 54 |

Is the resistance greater than 5 ohms?

**Yes**

REPAIR the high resistance circuit. For additional information, refer to the wiring diagrams. CLEAR the DTCs and test the system for normal operation.

**No**

GO to A8.

**A8: CHECK THE IGNITION COIL MONITOR CIRCUITS FOR HIGH RESISTANCE**

• NOTE: Unless multiple cylinder misfires are apparent, only one circuit will normally need to be tested. The DTC set will indicate which cylinder is misfiring.

1 Measure the resistance between:

| Cylinder 1 ignition coil connector, harness side | ECM connector PI300, harness side |
|---|---|
| PI02, pin 02 | Pin 62 |
| **Cylinder 2 ignition coil connector, harness side** | **ECM connector PI300, harness side** |
| PI06, pin 02 | Pin 64 |
| **Cylinder 3 ignition coil connector, harness side** | **ECM connector PI300, harness side** |
| PI03, pin 02 | Pin 64 |
| **Cylinder 4 ignition coil connector, harness side** | **ECM connector PI300, harness side** |
| PI07, pin 02 | Pin 62 |
| **Cylinder 5 ignition coil connector, harness side** | **ECM connector PI300, harness side** |
| PI04, pin 02 | Pin 64 |
| **Cylinder 6 ignition coil connector, harness side** | **ECM connector PI300, harness side** |
| PI08, pin 02 | Pin 62 |
| **Cylinder 7 ignition coil connector, harness side** | **ECM connector PI300, harness side** |
| PI05, pin 02 | Pin 62 |
| **Cylinder 8 ignition coil connector, harness side** | **ECM connector PI300, harness side** |
| PI09, pin 02 | Pin 64 |

Is the resistance greater than 5 ohms?

**Yes**

REPAIR the high resistance circuit. For additional information, refer to the wiring diagrams. CLEAR the DTCs and test the system for normal operation.

**No**

INSTALL a new ignition coil to the relevant cylinder.

REFER to: Ignition Coil-On-Plug (303-07B Engine Ignition - V8 4.2L Petrol/V8 S/C 4.2L Petrol, Removal and Installation).

Clear the DTC and test the system for normal operation. Refer to the warranty policy and procedures manual if an ECM is suspect.

GETtheMANUALS.org

**PINPOINT TEST B : CHECK SPARK PLUG**

• NOTE: Only resisted spark plugs must be used.

| TEST CONDITIONS | DETAILS/RESULTS/ACTIONS |
|---|---|
| **B1: CHECK SPARK PLUG** | |
| • NOTE: Some spark plug types cannot be regapped and must be replaced. | |
| | 1 Remove the suspect spark plug(s).<br>REFER to: Ignition Coil-On-Plug (303-07B Engine Ignition - V8 4.2L Petrol/V8 S/C 4.2L Petrol, Removal and Installation). |
| | 2 Visually inspect the spark plug for cracks, damage, carbon buildup or wet fouling, check the condition of the ground electrode, the center electrode tip and the spark plug HT contact and confirm that the spark plug gap is correctly set using a wire gauge taking care not to cause damage to the center or ground electrode tips.<br>REFER to: Specifications (303-07B Engine Ignition - V8 4.2L Petrol/V8 S/C 4.2L Petrol, Specifications). |
| | Is the spark plug condition good, and the spark plug gap correct ?<br>**Yes**<br>Check ignition coil and circuits. See possible sources list for misfire.<br>**No**<br>Install a new spark plug(s) as required.<br>REFER to: Specifications (303-07B Engine Ignition - V8 4.2L Petrol/V8 S/C 4.2L Petrol, Specifications) / Ignition Coil-On-Plug (303-07B Engine Ignition - V8 4.2L Petrol/V8 S/C 4.2L Petrol, Removal and Installation).<br>. CLEAR the DTC. TEST the system for normal operation. |

GETtheMANUALS.org

# Engine Ignition - V8 4.2L Petrol/V8 S/C 4.2L Petrol - Ignition Coil-On-Plug

Removal and Installation

## Removal

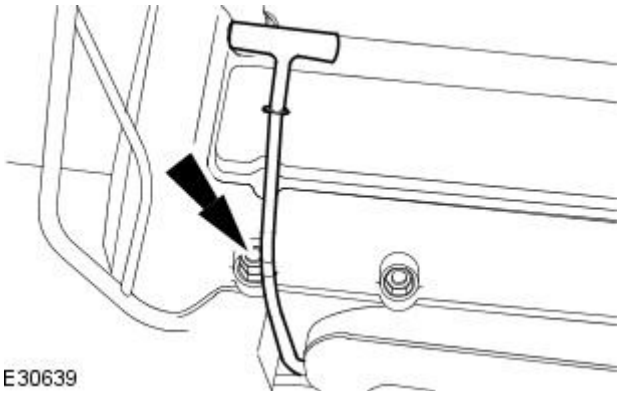


**1.** Remove the oil level indicator.

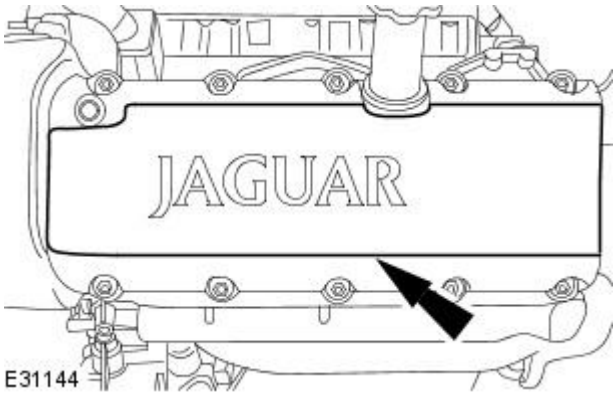


**2.** NOTE: Left-hand shown, right-hand similar.

Remove the ignition coil-on-plug cover.

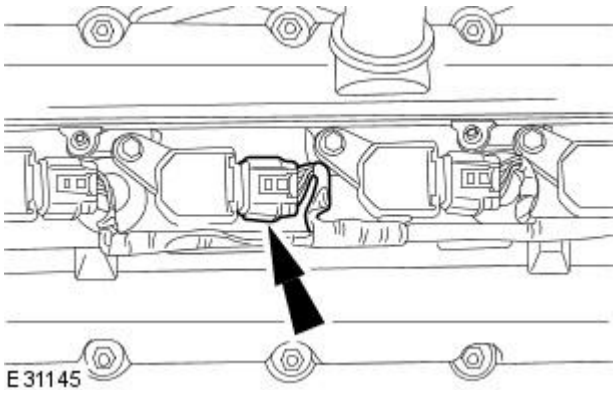


**3.** Disconnect the ignition coil-on-plug electrical connector.

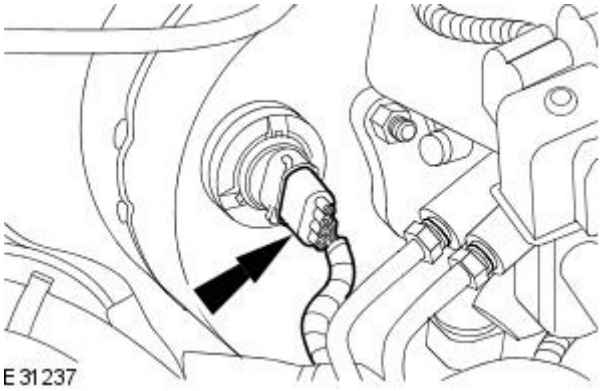


**4.** Disconnect the brake servo pressure sensor electrical connector.

GETtheMANUALS.org

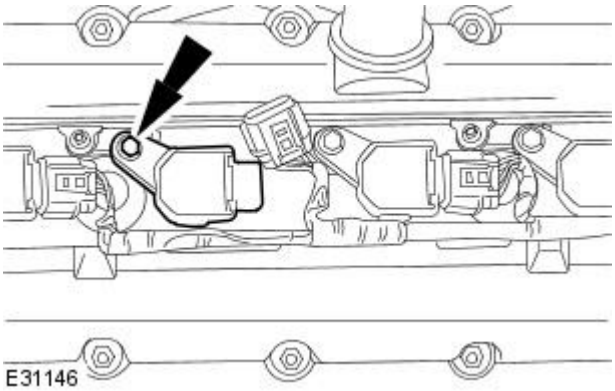


5. Remove the ignition coil-on-plug.
   - Remove the retaining bolt.

## Installation

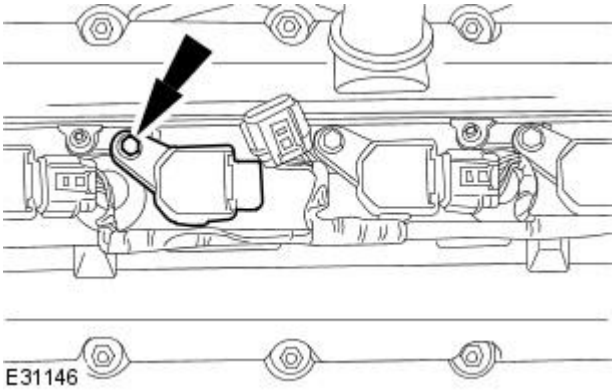


1. To install, reverse the removal procedure.
2. Tighten to 5 Nm.

GETtheMANUALS.org

# Glow Plug System -

| Description | Nm | lb-ft | lb-in |
|---|---|---|---|
| Glow plug | 10 | - | 89 |

GETtheMANUALS.org

# Glow Plug System - Glow Plug System

Description and Operation

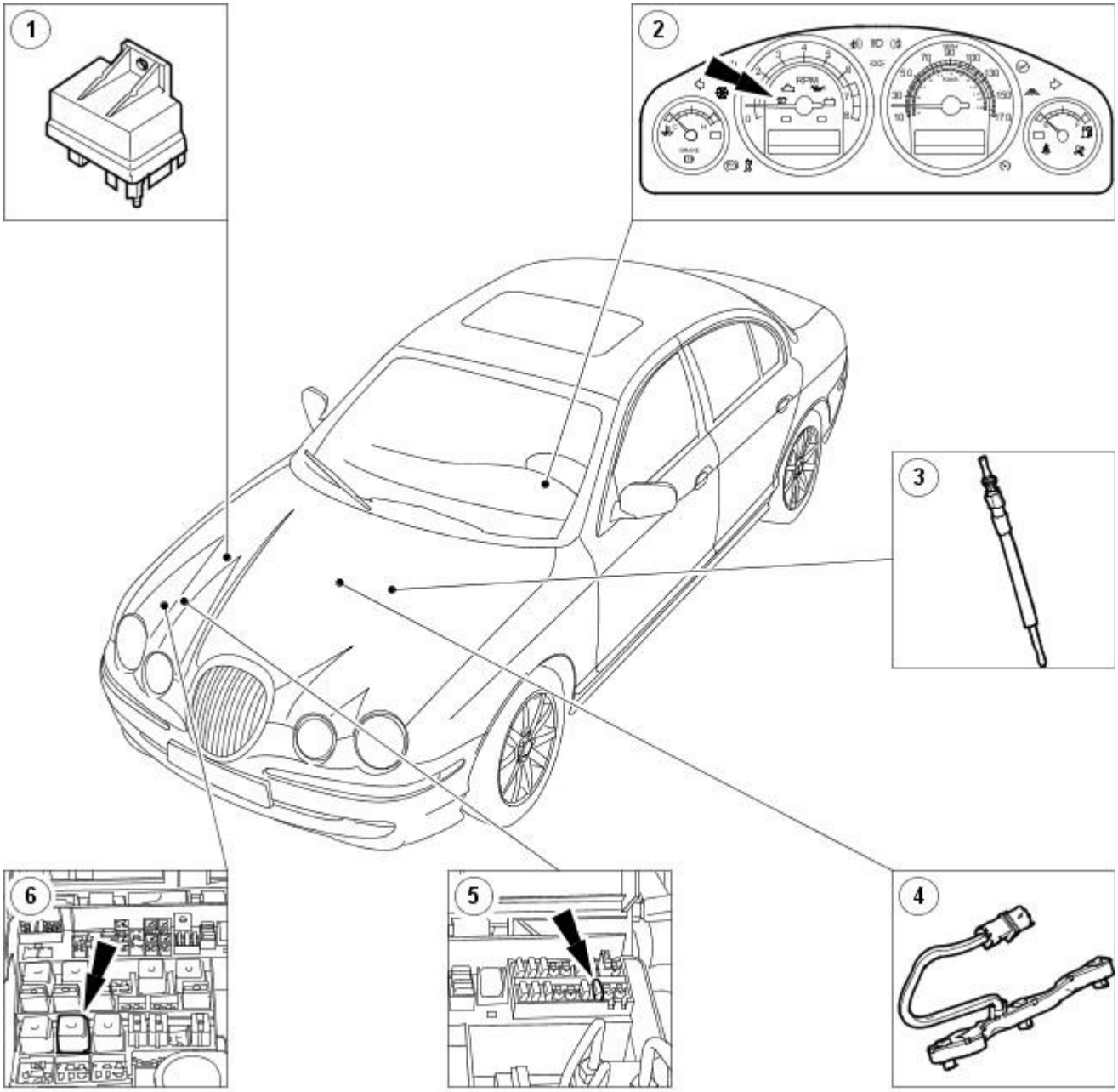


E52651

| Item | Part Number | Description |
|---|---|---|
| 1 | - | Glow plug module |
| 2 | - | Pre heat warning light |
| 3 | - | Glow plug |
| 4 | - | Glow plug wire |
| 5 | - | Glow plug fuse |
| 6 | - | Glow plug relay |

The fundamental purpose of the glow plugs is to improve the cold start capability, cold start emissions and customer perception of the vehicle, such as short glow plug times and minimum cranking times, as well as low combustion noise at low ambient temperatures.

The maximum current when switched on will be approximately 18 Amps per plug at 40° C (104° F) with a 12 Volt supply.

The Glow Plug Control Module (GPCM) is located in the engine bay on the right hand side. It acts as a switch for the current to the glow plugs and is controlled via the engine control module (ECM). Above a given coolant temperature, glow plugs will not be switched on before, during or after starting. Within a certain coolant temperature range, the glow plugs will be active before cranking to increase combustion chamber temperature, during cranking to assist engine starting, and after the engine has started in order to reduce the emissions of white and possibility black smoke from the tail pipe immediately following a cold start.

The ECM is connected to the GPCM via a reference control line and a diagnostic line. The former will be pulled down by the ECM causing the GPCM to switch on and to remain switched on while the reference voltage is low. The ECM will store the error information generated by the GPCM in the case of glow plug failure.

GETtheMANUALS.org

# Glow Plug System - Glow Plug System

Diagnosis and Testing

## Principle of operation

For information on the system operation.
REFER to: Glow Plug System (303-07C Glow Plug System, Description and Operation).

## Inspection and Verification

1. **1.** Verify the customer concern.
2. **2.** Visually inspect for obvious signs of electrical damage.

**Visual inspection table**

| Electrical |
|---|
| • Fuses (100 Amp midifuse and fuse 38 of the front power distribution box)<br>• Glow plug control module (GPCM)<br>• Engine management control relay<br>• Wiring harness(es)<br>• Electrical connector(s)<br>• Glow plug(s)<br>• Engine control module (ECM) |

3. **3.** If an obvious cause for an observed or reported concern is found, correct the cause (if possible) and test the system for normal operation before proceeding to the next step.
4. **4.** If the cause is not visually evident use the Jaguar approved diagnostic system or a scan tool to retrieve any fault codes before proceeding to the diagnostic trouble code (DTC) index.

## Symptom chart

| Symptom | Possible cause | Action |
|---|---|---|
| Poor starting (extreme weather conditions) | • Glow plugs inoperative/inefficient<br>• Fuel temperature too low | Check the glow plug harnesses at the glow plugs and at the connection to the main harness. For additional information, refer to the wiring diagrams. Check for DTCs indicating a control module or circuit fault. The fuel system recycles fuel until operating temperature is reached to reduce this possibility. |
| High cold-engine emissions | • After-glow phase inoperative | Check the glow plug harnesses at the glow plugs and at the connection to the main harness. For additional information, refer to the wiring diagrams. Check for DTCs indicating a control module or circuit fault. After-glow is designed to function at engine temperatures below 50° C (122° F), and below 2500 rpm. |
| High cold-engine noise, vibration or harshness | • After-glow phase inoperative | Check the glow plug harnesses at the glow plugs and at the connection to the main harness. For additional information, refer to the wiring diagrams. Check for DTCs indicating a control module or circuit fault. After-glow is designed to function at engine temperatures below 50° C (122° F), and below 2500 rpm. |

## DTC index

| DTC | Description | Possible source | Action |
|---|---|---|---|
| P0380 | Glow plug control module (GPCM) | • The GPCM is driven, but the glow plugs are not powered | For GPCM circuit tests, GO to Pinpoint Test B. |
| P0382 | Glow plug control module (GPCM) | • The GPCM is not driven, but the glow plugs are powered | For GPCM circuit tests, GO to Pinpoint Test B. |
| P0383 | Glow plug control module (GPCM) circuit low | • GPCM control circuit: short circuit to ground | For GPCM control circuit tests, GO to Pinpoint Test A. |
| P0384 | Glow plug control module (GPCM) circuit high | • GPCM control circuit: short circuit to power | For GPCM control circuit tests, GO to Pinpoint Test A. |
| P0670 | Glow plug control module (GPCM) circuit open | • GPCM control circuit: high resistance | For GPCM control circuit tests, GO to Pinpoint Test A. |

## Pinpoint Tests

CAUTION: When probing connectors to take measurements in the course of the pinpoint tests, use the adaptor kit, part number 3548-1358-00. Failure to follow this instruction may result in damage to the vehicle.

• NOTE: When performing voltage or resistance tests, always use a digital multimeter (DMM) accurate to 3 decimal places, and with an up-to-date calibration certificate. When testing resistance, always take the resistance of the DMM leads into account.

• NOTE: Check and rectify basic faults before beginning diagnostic routines involving pinpoint tests.

• NOTE: If DTCs are recorded and a fault is not present when performing the pinpoint tests, an intermittent concern may be the cause. Always check for loose connections and corroded terminals.

| PINPOINT TEST A : GLOW PLUG CONTROL MODULE (GPCM) CONTROL CIRCUIT | |
|---|---|
| TEST CONDITIONS | DETAILS/RESULTS/ACTIONS |
| A1: CHECK THE GPCM CONTROL CIRCUIT FOR SHORT CIRCUIT TO GROUND | |

GETtheMANUALS.org

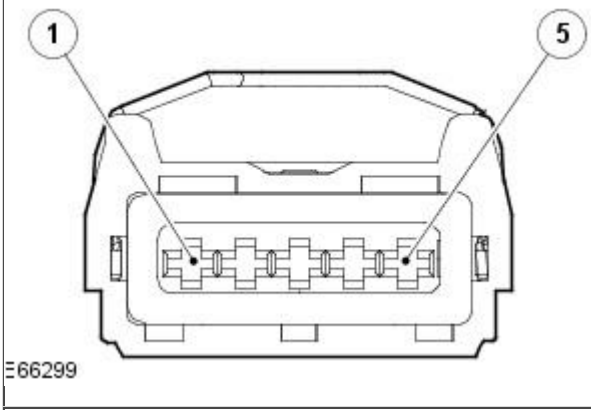


**Glow plug control module (GPCM) connector, FH20**

| Circuit | Pin |
|---|---|
| Ground | 01 |
| Control from ECM | 02 |
| Power supply from FPDB | 03 |
| Logic monitor | 05 |

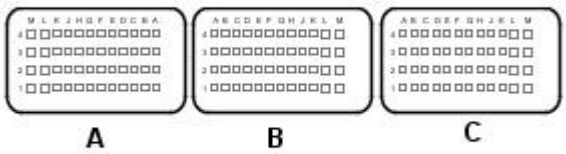


**Engine control module (ECM) connector, C98**

| Circuit | Pin |
|---|---|
| Glowplug control module signal | G3 |
| Logic monitor | E3 |

1 Key off.
2 Disconnect the GPCM electrical connector, FH20.
3 Measure the resistance between:

| FH20, harness side | Battery |
|---|---|
| Pin 02 | Negative terminal |

Is the resistance greater than 10 Kohms?

**Yes**
GO to A3.

**No**
GO to A2.

**A2: CHECK WHETHER THE SHORT CIRCUIT IS IN THE HARNESS OR THE ECM**

1 Disconnect the ECM connector, C98.
2 Measure the resistance between:

| FH20, harness side | Battery |
|---|---|
| Pin 02 | Negative terminal |

Is the resistance greater than 10 Kohms?

**Yes**
An intermittent fault may be present in the wiring harness. Visually check for chaffed wires or other physical damage to the harness.

**No**
REPAIR the short circuit. For additional information, refer to the wiring diagrams. Clear the DTC, test the system for normal operation.

**A3: CHECK THE GPCM CONTROL CIRCUIT FOR SHORT CIRCUIT TO POWER**

1 Key off.
2 Measure the resistance between:

| FH20, harness side | Battery |
|---|---|
| Pin 02 | Positive terminal |

Is the resistance greater than 10 Kohms?

**Yes**
GO to A5.

**No**
GO to A4.

**A4: CHECK WHETHER THE SHORT CIRCUIT IS IN THE HARNESS OR THE ECM**

1 Disconnect the ECM connector, C98.
2 Measure the resistance between:

| FH20, harness side | Battery |
|---|---|
| Pin 02 | Positive terminal |

Is the resistance greater than 10 Kohms?

**Yes**
An intermittent fault may be present in the wiring harness. Visually check for chaffed wires or other physical damage to the harness.

**No**
REPAIR the short circuit. For additional information, refer to the wiring diagrams. Clear the DTC, test the system for normal operation.

**A5: CHECK THE GPCM CONTROL CIRCUIT FOR HIGH RESISTANCE**

1 Disconnect the ECM connector, C98.
2 Measure the resistance between:

| FH20, harness side | C98, harness side |
|---|---|
| Pin 02 | Pin G3 |

GETtheMANUALS.org

| | |
|---|---|
| | Is the resistance less than 10 ohms?<br>**Yes**<br>An intermittent fault may be present in the wiring harness. Visually check for chaffed wires or other physical damage to the harness. Refer to the warranty policy and procedures manual if a module is suspect.<br>**No**<br>REPAIR the high resistance circuit. This circuit includes connector, PI41. For additional information, refer to the wiring diagrams. Clear the DTC, test the system for normal operation. |

## PINPOINT TEST B : GLOW PLUG CONTROL MODULE (GPCM) OUTPUT

| TEST CONDITIONS | DETAILS/RESULTS/ACTIONS |
|---|---|

### B1: CHECK THE PERMANENT POWER SUPPLY TO THE GPCM

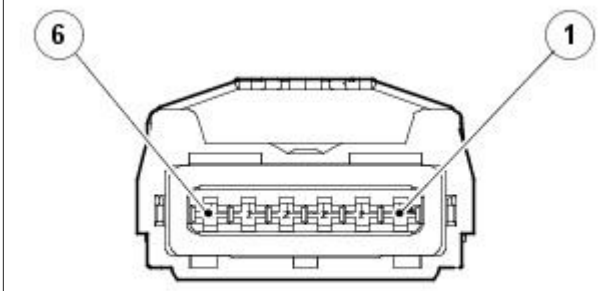

E66300

**Glow plug control module (GPCM) connector, GP04**

| Circuit | Pin |
|---|---|
| Cylinder 1 output | Pin 01 |
| Cylinder 2 output | Pin 02 |
| Cylinder 3 output | Pin 03 |
| Cylinder 4 output | Pin 04 |
| Cylinder 5 output | Pin 05 |
| Cylinder 6 output | Pin 06 |

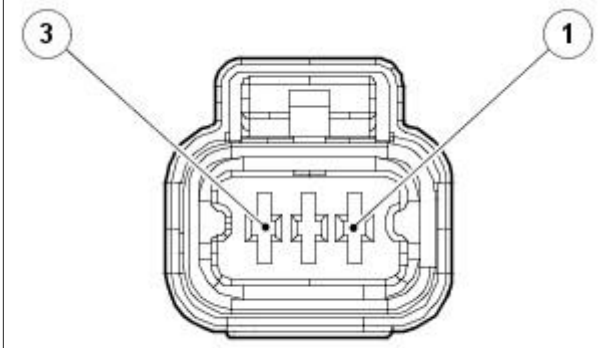

E66319

**Right hand glow plug connector, GP01**

| Circuit | Pin |
|---|---|
| Cylinder 1 | 01 |
| Cylinder 2 | 02 |
| Cylinder 3 | 03 |

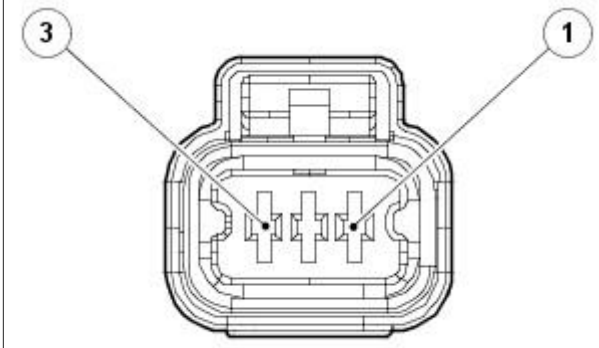

E66319

**Left hand glow plug connector, GP02**

| Circuit | Pin |
|---|---|
| Cylinder 4 | 01 |
| Cylinder 5 | 02 |
| Cylinder 6 | 03 |

1 Disconnect the glow plug module connector, FH23 (this is an eyelet).

2 Measure the voltage between:

| FH23, harness side | Battery |
|---|---|
| Pin 01 | Negative terminal |

Is the voltage greater than 10 volts?

**Yes**

GO to B2.

**No**

REPAIR the permanent power supply circuit. This circuit includes the 100A midi fuse. For additional information, refer to the wiring diagrams. Clear any DTCs, test the system for normal operation.

### B2: CHECK THE IGNITION POWER SUPPLY TO THE GPCM

1 Disconnect the glow plug module connector, FH20.

2 Key on, engine off.

- Make sure the EMS relay is energized

3 Measure the voltage between:

| FH20, harness side | Battery |
|---|---|
| Pin 03 | Negative terminal |

GETtheMANUALS.org

Is the voltage greater than 10 volts?

**Yes**

GO to B3.

**No**

REPAIR the ignition power supply circuit. This circuit includes fuse 38 of the front power distribution box. For additional information, refer to the wiring diagrams. Clear any DTCs, test the system for normal operation.

**B3: CHECK THE GROUND TO THE GPCM**

1. Key off.
2. Measure the resistance between:

| FH20, harness side | Battery |
|---|---|
| Pin 01 | Negative terminal |

Is the resistance less than 10 ohms?

**Yes**

GO to B4.

**No**

REPAIR the high resistance circuit. For additional information, refer to the wiring diagrams. Clear any DTCs, test the system for normal operation.

**B4: CHECK THE GLOW PLUG OUTPUT CIRCUITS FOR SHORT CIRCUIT TO GROUND**

1. Key off.
2. Disconnect the glow plug module connector, GP04
3. Disconnect the glow plug connectors, GP01 and GP02.
4. Measure the resistance between:

**Right hand bank**

| GP01, harness side | Battery |
|---|---|
| Pin 01 | Negative terminal |
| Pin 02 | |
| Pin 03 | |

**Left hand bank**

| GP02, harness side | Battery |
|---|---|
| Pin 04 | Negative terminal |
| Pin 05 | |
| Pin 06 | |

Is the resistance greater than 100 Kohms?

**Yes**

GO to B5.

**No**

REPAIR the short circuit. For additional information, refer to the wiring diagrams. Clear any DTCs, test the system for normal operation.

**B5: CHECK THE GLOW PLUG OUTPUT CIRCUITS FOR SHORT CIRCUIT TO POWER**

1. Measure the resistance between:

**Right hand bank**

| GP01, harness side | Battery |
|---|---|
| Pin 01 | Positive terminal |
| Pin 02 | |
| Pin 03 | |

**Left hand bank**

| GP02, harness side | Battery |
|---|---|
| Pin 04 | Positive terminal |
| Pin 05 | |
| Pin 06 | |

Is the resistance greater than 100 Kohms?

**Yes**

GO to B6.

**No**

REPAIR the short circuit. For additional information, refer to the wiring diagrams. Clear any DTCs, test the system for normal operation.

**B6: CHECK THE GLOW PLUG OUTPUT CIRCUITS FOR HIGH RESISTANCE**

1. Measure the resistance between:

**Right hand bank**

| GP04, harness side | GP01, harness side |
|---|---|
| Pin 01 | Pin 01 |
| Pin 02 | Pin 02 |
| Pin 03 | Pin 03 |

**Left hand bank**

| GP04, harness side | GP02, harness side |
|---|---|
| Pin 04 | Pin 01 |
| Pin 05 | Pin 02 |
| Pin 06 | Pin 03 |

Is the resistance less than 10 ohms?

**Yes**

If DTCs P0380 or P0382 are logged and the tests above have not identified a circuit fault, a control module may be at fault.

**No**

REPAIR the high resistance circuit. For additional information, refer to the wiring diagrams. Clear the DTC, test the system for normal operation.

GETtheMANUALS.org

# Glow Plug System - Glow Plugs

Removal and Installation

## Removal

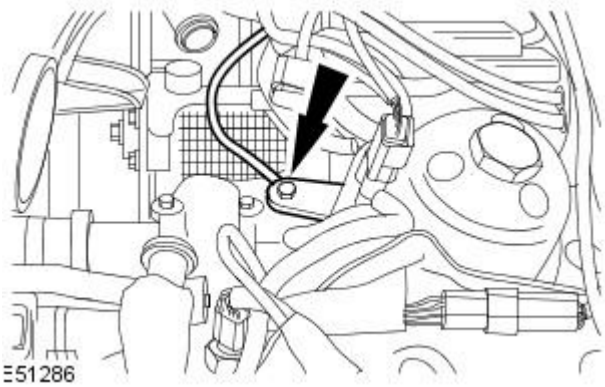


1. Remove the intake air shutoff throttle.
   For additional information, refer to: Intake Air Shutoff Throttle (303-04C Fuel Charging and Controls - 2.7L V6 - TdV6, Removal and Installation).
2. Detach the glow plug rail.

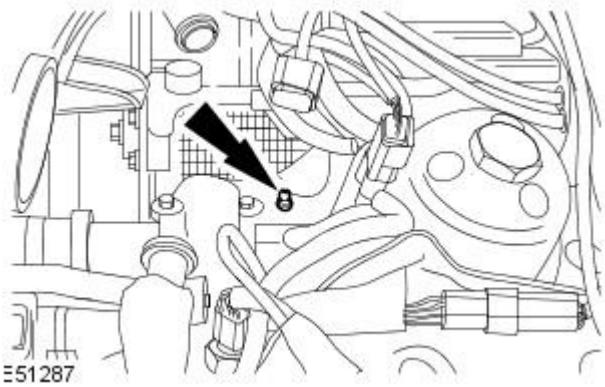


3. Remove the glow plugs.

## Installation

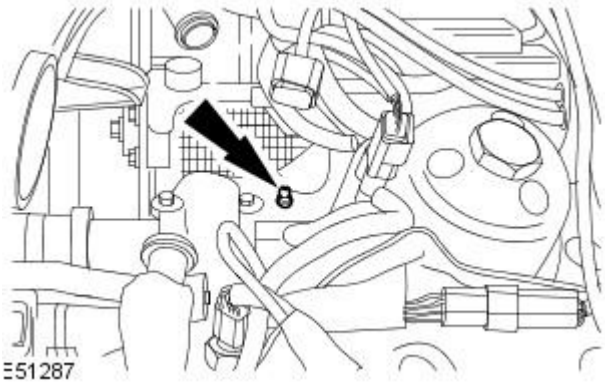


1. NOTE: Make sure glow plug rail is correctly fitted to all glow plugs on the engine bank.

   To install, reverse the removal procedure.

   - Tighten to 10 Nm.

GETtheMANUALS.org

# Engine Emission Control - V8 4.2L Petrol / V8 S/C 4.2L Petrol / 2.5L NA V6 - AJV6 / 3.0L NA V6 - AJ27 -

**Torque Specifications**

| Description | Nm | lb-ft | lb-in |
|---|---|---|---|
| Exhaust gas recirculation (EGR) valve to intake manifold retaining bolts - Vehicles with 4.2L engine | 10 | 7 | - |
| EGR valve tube to EGR valve retaining bolts - Vehicles with 4.2L engine | 21 | 15 | - |
| Exhaust manifold to EGR valve tube retaining nuts - Vehicles with 4.2L engine | 21 | 15 | - |
| Secondary air injection (AIR) control valve to exhaust manifold tube retaining nuts | 35 | 26 | - |
| AIR control valve to exhaust manifold tube to exhaust manifold adaptor | 35 | 26 | - |
| Exhaust manifold blanking plug - Vehicles without AIR | 35 | 26 | - |
| AIR control valve bracket retaining bolt - Vehicles with 3.0L engine | 8 | - | 71 |
| AIR control valve bracket retaining nut - Vehicles with 3.0L engine | 8 | - | 71 |
| AIR control valve retaining bolts - Vehicles with 4.2L engine | 25 | 18 | - |
| AIR pump retaining nuts | 9 | - | 80 |
| AIR pump retaining bolt | 9 | - | 80 |
| AIR vacuum reservoir retaining nut | 5 | - | 44 |
| AIR vacuum reservoir retaining bolt | 5 | - | 44 |

GETtheMANUALS.org

# Engine Emission Control - V8 4.2L Petrol / V8 S/C 4.2L Petrol / 2.5L NA V6 - AJV6 / 3.0L NA V6 - AJ27 - Engine Emission ControlVIN Range: M45255->N52047

Description and Operation

## Positive Crankcase Ventilation System

Vehicles fitted with 4.2L engine

On vehicles fitted with a 4.2L engine the positive crankcase ventilation (PCV) system consists of a PCV valve, and two PCV hoses. The PCV valve is mounted on the right-hand valve cover and a hose is connected between PCV valve and the throttle body elbow. The PCV valve regulates the amount of ventilation air and crankcase gas supplied to the intake manifold and also prevents backfiring into the crankcase. The left-hand valve cover PCV hose is connected to the air cleaner outlet pipe.

Vehicles fitted with 2.5L and 3.0L engine

On vehicles fitted with 2.5L and 3.0L engine the PCV system consists of two hoses, connected between the right-hand valve cover and the intake manifold and the left-hand valve cover and the air cleaner outlet pipe. .

The PCV system recycles crankcase gases back through the engine where they mix with incoming air/fuel charge.

The positive crankcase ventilation system helps to reduce hydrocarbon emissions from the engine.

## Exhaust Gas Recirculation System

Exhaust Gas Recirculation (EGR) Valve

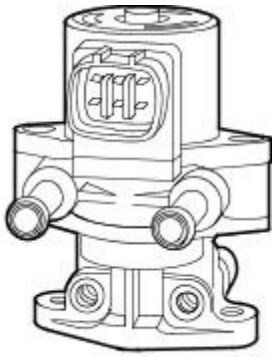

E30253

Exhaust Manifold to Exhaust Gas Recirculation (EGR) Valve Tube

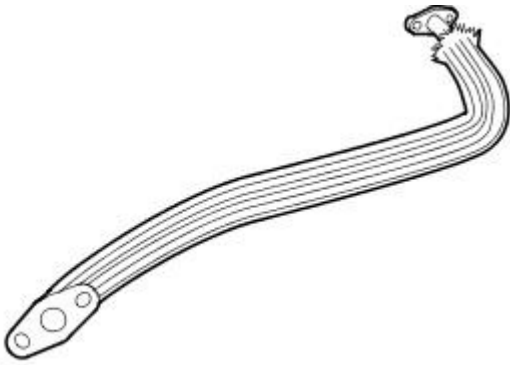

E30254

The exhaust gas recirculation (EGR) system is fitted on all vehicles fitted with a 4.2L engine. It comprises of an EGR valve and exhaust manifold to EGR valve tube. The EGR system allows a measured quantity of exhaust gas to be directed back to the intake manifold. The exhaust gas is introduced to the incoming charge in the intake manifold, where it mixes with the air/fuel mixture and lowers the peak gas temperature, reducing nitrogen oxide (NOX) exhaust emissions. The gas is drawn through the exhaust manifold to EGR valve tube from the exhaust to the inlet manifold via the EGR valve. The EGR valve is electrically operated and is controlled via an input from the engine control module (ECM).

On vehicles without super charger the EGR valve is mounted on the intake manifold. On vehicles with supercharger the EGR valve is mounted on the throttle body elbow.

The ECM can monitor the operation of the EGR system by receiving inputs from the manifold absolute pressure (MAP) sensor. The MAP sensor monitors the EGR flow by the change in intake manifold pressure when the EGR valve is operated. If at any time the input signal to the ECM exceeds pre-defined thresholds due to low pressure reading for a calibrated period of time, a diagnostic trouble code (DTC) is recorded.

On vehicles without super charger the MAP sensor is mounted on the rear of intake manifold. On vehicles with supercharger the MAP sensor is mounted on the rear of the throttle body elbow.For additional information, refer to Section 303-14A Electronic Engine Controls / 303-14B Electronic Engine Controls / 303-14C Electronic Engine Controls.

GETtheMANUALS.org

# Engine Emission Control - V8 4.2L Petrol/V8 S/C 4.2L Petrol/2.5L NA V6 - AJV6/3.0L NA V6 - AJ27 - Engine Emission ControlVIN Range: N52048->N99999

Description and Operation

## Positive Crankcase Ventilation (PCV) System

The PCV system recycles crankcase gases back through the engine where they mix with incoming air/fuel charge and help to reduce hydrocarbon emissions.

Vehicles with 3.0L engine

The PCV system consists of two hoses, connected between the left-hand valve cover and the intake manifold and the right-hand valve cover and the air cleaner outlet pipe.

Vehicles with 4.2L engine

The PCV system consists of a valve, and two hoses. The PCV valve is mounted on the right-hand valve cover and a hose is connected between PCV valve and the throttle body elbow. The left-hand valve cover PCV hose is connected to the air cleaner outlet pipe.

The PCV valve regulates the amount of ventilation air and crankcase gas supplied to the intake manifold and also prevents backfiring into the crankcase.

## Exhaust Gas Recirculation (EGR) System - Vehicles with 4.2L engine

EGR Valve

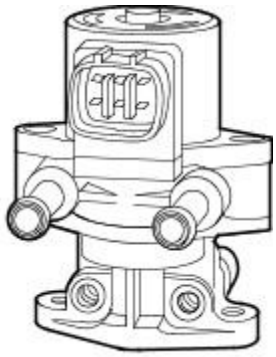

E30253

EGR Valve Tube

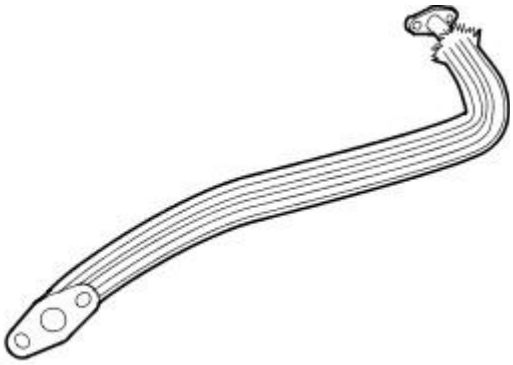

E30254

The EGR system comprises of an EGR valve and exhaust manifold to EGR valve tube. The EGR system allows a measured quantity of exhaust gas to be directed back to the intake manifold. The exhaust gas is introduced to the incoming charge air in the intake manifold, where it mixes with the air/fuel mixture and lowers the peak gas temperature, reducing nitrogen oxide (NOx) exhaust emissions. The gas is drawn through the exhaust manifold to EGR valve tube from the exhaust to the inlet manifold through the EGR valve. The EGR valve is electrically operated and is controlled through an input from the engine control module (ECM).

On vehicles without a supercharger the EGR valve is mounted on the intake manifold. On vehicles with a supercharger the EGR valve is mounted on the throttle body elbow.

The ECM monitors the operation of the EGR system from inputs from the manifold absolute pressure (MAP) sensor and can detect high or low flow through the valve as a result of changes to the pressure readings.

High or low flow outside the expected range results in the setting of a diagnostic trouble code (DTC).

On vehicles without a supercharger the MAP sensor is mounted on the rear of intake manifold. On vehicles with a supercharger the MAP sensor is mounted on the rear of the throttle body elbow.
For additional information, refer to: Electronic Engine Controls (303-14B Electronic Engine Controls - V8 4.2L Petrol/V8 S/C 4.2L Petrol, Description and Operation).

## Secondary Air Injection (AIR) System

To assist in the reduction of exhaust emissions to meet European Union (EU) Stage 4 and Federal Petrol Emission standards, AIR is fitted to the vehicle.

GETtheMANUALS.org

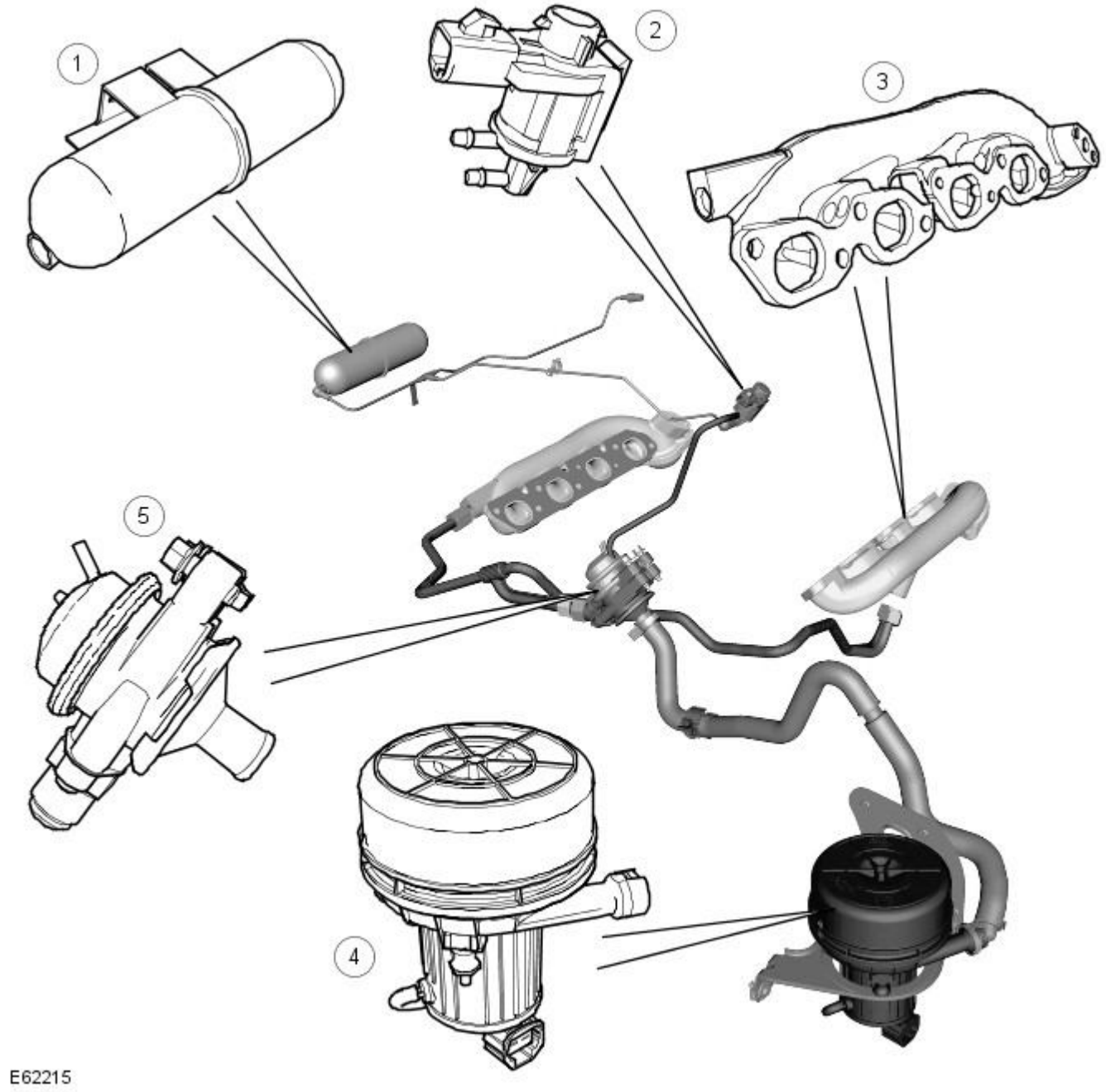


| Item | Part Number | Description |
|---|---|---|
| 1 | - | AIR vacuum reservoir |
| 2 | - | AIR switching valve |
| 3 | - | Exhaust manifolds |
| 4 | - | AIR pump |
| 5 | - | AIR control valve |

The AIR pump is used to provide a supply of air into the exhaust manifolds during the cold start period of the engine. The AIR cycle lasts for up to 65 seconds. The hot unburnt fuel particles leaving the combustion chamber mix with the air injected into the exhaust manifolds and immediately combust.

This subsequent combustion of the unburnt and partially burnt carbon monoxide (CO) and hydrocarbon (HC) particles help to reduce the emission of these pollutants from the exhaust system. The additional heat generated in the exhaust manifold also provides rapid heating of the exhaust system catalytic converters. The additional oxygen which is delivered to the catalytic converters also generates an exothermic reaction which causes the catalytic converters to reach their optimum operating temperature and 'light off' quickly.

The catalytic converters only start to provide effective treatment of emission pollutants when they reach an operating temperature of approximately 250°C (482°F) and need to be between temperatures of 400°C (752°F) and 800°C (1472°F) for optimum efficiency. Consequently, the heat produced by the AIR 'afterburning' reduces the time delay before the catalysts reach an efficient operating temperature.

The AIR system comprises the following components:

- AIR pump
- AIR switching valve
- AIR control valve
- AIR vacuum reservoir
- AIR pump relay
- AIR pressure sensor (North American specification vehicles only)

**AIR Pump**

GETtheMANUALS.org

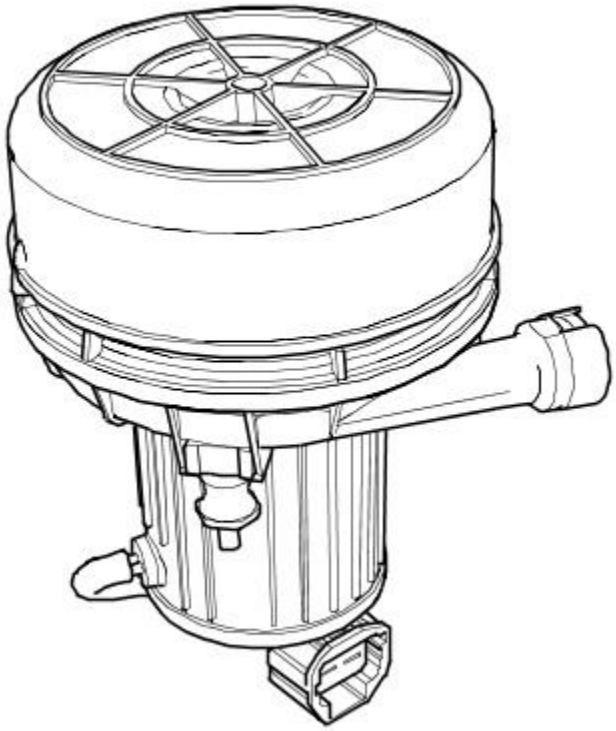

E62274

The AIR pump is located behind the left-hand side of the front bumper cover. The pump is fitted on rubber mountings to help prevent noise which is generated by AIR pump operation. The AIR pump is powered from the vehicle battery by a dedicated relay and supplies approximately 10 to 15 kg/hr (22 to 33 lb/hr) of air when the engine is at idle speed and the ambient temperature is below 20°C (68°F).

Air is drawn into the AIR pump through vents in its front cover and is then passed through a foam filter. The air is delivered to the exhaust manifold on each side of the engine through a combination of plastic pipes and stainless steel tubes.

One second after the AIR pump is energised, the ECM switches on the AIR switching valve, which opens to allow vacuum from the AIR vacuum reservoir to be applied to the vacuum operated AIR control valve. When the vacuum is applied to the AIR control valve, it opens to allow the air from the AIR pump through to the exhaust manifolds.

When the ECM switches off the AIR switching valve, the vacuum supply to the AIR control valve is cut-off and the valve closes to prevent further air being injected into the exhaust manifolds. With an approximate five second delay after as the AIR switching valve is closed, the ECM removes power from the AIR pump relay, and this in turn stops the AIR pump from operating.

**AIR Switching Valve**

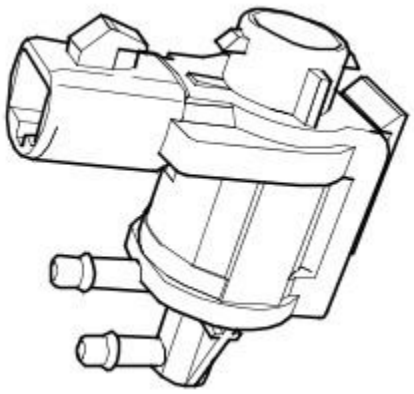

E62276

The ECM switches on the AIR switching valve with a one second delay after initiating AIR pump operation. When the AIR switching valve is open, a steady vacuum supply is allowed through to open the vacuum operated AIR control valve. When the ECM switches off the AIR switching valve, the valve closes and immediately shuts off the vacuum supply to the AIR control valve. The pump continues to operate for a further five seconds for system diagnostic purposes.

When the AIR switching valve is switched off, the vacuum supply line opens to atmosphere, and this causes the AIR switching valve to close automatically to prevent any further injection of air.

**AIR Control Valve**

GETtheMANUALS.org

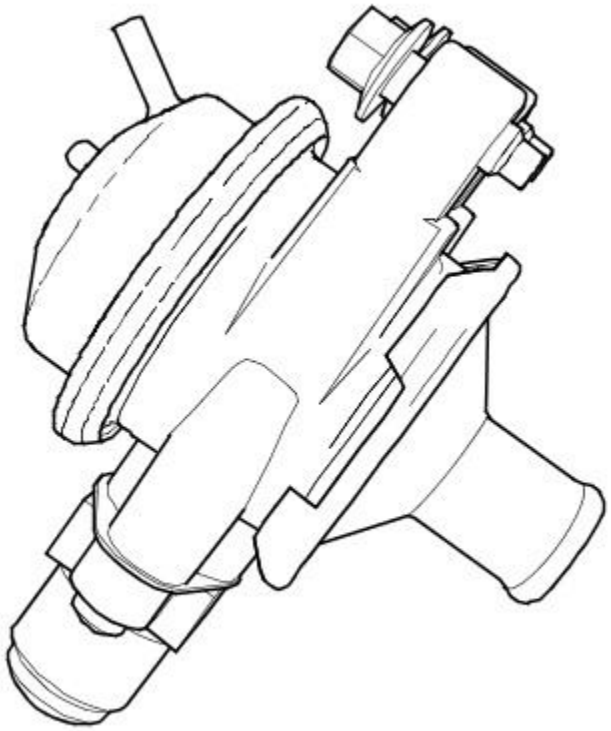

E62275

The injected air from the AIR pump is controlled by the AIR control valve. This allows the correct amount of air to be injected directly into the exhaust manifolds. The AIR control valve prevents exhaust gasses from blowing back into the AIR pump.

The AIR control valve is assisted in operation by a vacuum source from the AIR vacuum reservoir located in the right-hand side of the engine bay. This assistance allows the actuation of the AIR control valve independently from the intake manifold vacuum levels available.

When the pressure in the exhaust system is higher than in the AIR system, the AIR control valve closes the circuit, and this protects the AIR system from exhaust gasses blowing back into the AIR system.

Vacuum to the AIR switching valve is provided from the intake manifold vacuum by the AIR vacuum reservoir. A small bore vacuum hose provides the vacuum route between the AIR vacuum reservoir and AIR switching valve. A further small bore vacuum hose is used to connect the AIR switching valve to the AIR control valve.

### AIR Vacuum Reservoir

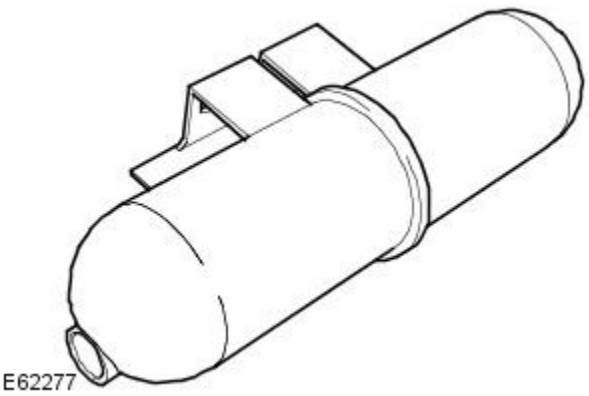

E62277

The AIR vacuum reservoir is located on the right-hand side of the engine bay.

The AIR vacuum reservoir is included in the vacuum supply line between the intake manifold and the AIR switching valve.

The AIR vacuum reservoir contains a one-way valve to stop vacuum leaking back towards the intake manifold side. The AIR vacuum reservoir holds a constant vacuum so that the AIR control valve opens as soon as the AIR switching valve is switched on.

### AIR Pump Relay

The AIR pump relay is located in the engine compartment fusebox. The ECM is used to control the operation of the AIR pump by the AIR pump relay.

The AIR system receives its voltage supply through the AIR pump relay. The ECM monitors the state of the relay for correct operation as part of its system diagnostic.

### AIR Pressure Sensor - North American specification vehicles only

The AIR system is monitored by measuring the system pressure by using the AIR pressure sensor at several instances during its cycle of operation.

GETtheMANUALS.org

The AIR system pressure is measured before operation of the AIR pump. The AIR pump is then switched on and with a one second delay, the AIR switching valve is opened. After a stabilizing period, the system pressure is measured again, this time by taking the average of a

one second duration of readings, and normalising for variations in battery voltage and atmospheric pressure. If the system pressure measured at this time has not risen enough with respect to the initial AIR pressure reading then a failure will be flagged.

A second pressure measurement is made after the requirement for AIR into the exhaust system has expired, but continuing on from the same period of AIR pump operation, i.e. the pump is left running, against a closed AIR switching valve. Again this pressure measurement is the average of a one second duration of readings normalised for variations in battery voltage and atmospheric pressure. If the system pressure measured at this time has not risen enough or has risen too much with respect to the system pressure during normal operation of AIR then a failure will be flagged.

A final pressure reading is taken after the AIR system has been switched off to ensure the system shuts down.

GETtheMANUALS.org

# Engine Emission Control - V8 4.2L Petrol/V8 S/C 4.2L Petrol/2.5L NA V6 - AJV6/3.0L NA V6 - AJ27 - Engine Emission ControlVIN Range: M45255->N52047

Diagnosis and Testing

1. **1.** Verify the customer concern by operating the system.
2. **2.** Visually inspect for obvious signs of mechanical or electrical damage.
3. **3.** If an obvious cause for an observed or reported concern is found, correct the cause (if possible) before proceeding to the next step.
4. **4.** If the concern is not visually evident, refer to the Symptom Chart.

**Symptom Chart**

| Symptom | Possible Sources | Action |
|---|---|---|
| Diagnostic Trouble Code (DTC) P0400 indicates exhaust gas recirculation (EGR) system flow malfunction. | * Exhaust manifold to EGR valve pipe tube blocked.<br>* Exhaust manifold to EGR valve pipe tube cracked.<br>* EGR valve stuck closed.<br>* EGR valve stuck open.<br>* EGR valve loose.<br>* Fuse 37 in the front power distribution box (FPDB).<br>* Relay 5 in the FPDB<br>* Electrical harness.<br>* Electrical connector(s) | * GO to Pinpoint Test A. |
| Diagnostic Trouble Code (DTC) P0405 indicates exhaust gas recirculation (EGR) valve malfunction, short to battery/12volts (V). | * Electrical harness.<br>* Electrical connector(s).<br>* Engine control module (ECM).<br>* EGR valve. | * GO to Pinpoint Test B. |
| Diagnostic Trouble Code (DTC) P0406 indicates exhaust gas recirculation (EGR) valve malfunction, short to ground/open circuit. | * Electrical harness.<br>* Electrical connector(s).<br>* ECM.<br>* EGR valve. | * GO to Pinpoint Test C. |

**PINPOINT TEST A : DIAGNOSTIC TROUBLE CODE (DTC) P0400 INDICATES EXHAUST GAS RECIRCULATION (EGR) SYSTEM FLOW MALFUNCTION.**

| TEST CONDITIONS | DETAILS/RESULTS/ACTIONS |
|---|---|
| **A1: CHECK EGR VALVE FOR CORRECT FITMENT TO INTAKE MANIFOLD** | |
| | 1 Check the EGR valve retaining bolts for correct torque.<br>REFER to Exhaust Gas Recirculation (EGR) Valve in this section. |
| | Was the EGR valve fitted correctly?<br>**Yes**<br>GO to A3.<br>**No**<br>GO to A2. |
| **A2: CHECK EXHAUST GAS RECIRCULATION (EGR) VALVE TO MANIFOLD/INTAKE ELBOW GASKET FOR CORRECT SEAL** | |
| | 1 Visually inspect the gasket for external damage. |
| | Is the gasket damaged?<br>**Yes**<br>INSTALL a new gasket, make sure valve is seated correctly and retaining bolts installed to the correct torque.<br>REFER to Exhaust Gas Recirculation (EGR) Valve in this section.<br>CLEAR DTC. To validate fix drive vehicle between 30 mph (48 kph) and 40 mph (64 kph). Allow vehicle to idle for 2 minutes.<br>**No**<br>GO to A3. |
| **A3: CHECK FOR EXHAUST MANIFOLD TO EGR VALVE TUBE FOR DAMAGE OR BLOCKAGES** | |
| | 1 Visually inspect the exhaust manifold to EGR valve tube. |
| | Is the tube damaged or blocked?<br>**Yes**<br>If the tube is damaged INSTALL a new tube.<br>REFER to Exhaust Manifold to Exhaust Gas Recirculation (EGR) Valve Tube in this section.<br>CLEAR the DTC. To validate fix drive vehicle between 30 mph (48 kph) and 40 mph (64 kph). Allow vehicle to idle for 2 minutes. If the tube is blocked, unblock the tube. CLEAR DTC. TEST the system for normal operation.<br>**No**<br>GO to A4. |
| **A4: CHECK FOR POWER SUPPLY TO EGR VALVE** | |
| | 1 Disconnect EGR valve electrical connector PI 15 |
| | 2 TURN ignition switch to the ON position |
| | 3 MEASURE the voltage at PI 15 pin 2 (GU) |
| | Is the voltage less than 10 volts<br>**Yes**<br>GO to A5.<br>**No**<br>GO to A5. |
| **A5: CHECK FUSE 37 IN THE FRONT POWER DISTRIBUTION BOX (FPDB)** | |
| | 1 Check the fuse. |
| | Is the fuse ok?<br>**Yes**<br>GO to A7.<br>**No**<br>GO to A8. |
| **A6: CHECK HARNESS BETWEEN FPDB AND EGR FOR SHORT TO GROUND** | |
| | 1 Disconnect the EGR valve electrical connector PI 15. |

GETtheMANUALS.org

| | |
|---|---|
| | 2 CHECK the resistance between PI 15 pin 2 (GU) and ground. |
| | Is the resistance less than 10,000 Ohms?<br>**Yes**<br>REPAIR the circuit between the EGR valve and FPDB. INSTALL a new fuse. CLEAR DTC. To validate fix drive vehicle between 30 mph (48 kph) and 40 mph (64 kph). Allow vehicle to idle for 2 minutes.<br>**No**<br>INSTALL a new fuse. CLEAR DTC. To validate fix drive vehicle between 30 mph (48 kph) and 40 mph (64 kph). Allow vehicle to idle for 2 minutes. |
| **A7: CHECK FOR BATTERY VOLTAGE AT FPDB** | |
| | 1 CHECK for voltage at FPDB electrical connector FH 32 pin 43 (GU). |
| | Is the voltage less than 10 volts?<br>**Yes**<br>REPAIR the circuit between FPDB electrical connector FH 32 pin 43 (GU) and FPDB relay 5.<br>**No**<br>REPAIR the circuit between FPDB electrical connector FH 32 pin 43 (GU) and EGR valve electrical connector PI 15 pin 2 (GU). CLEAR DTC. To validate fix drive vehicle between 30 mph (48 kph) and 40 mph (64 kph). Allow vehicle to idle for 2 minutes. |
| **A8: CHECK FOR POWER SUPPLY TO EGR VALVE** | |
| | 1 Disconnect EGR valve electrical connector PI 15 |
| | 2 MEASURE the voltage at PI 15 pin 5 (GU) |
| | Is the voltage less than 10 volts?<br>**Yes**<br>REPAIR the circuit between PI 15 pin 5 (GU) and splice PIS 15. CLEAR DTC. TEST the system for normal operation.<br>**No**<br>INSTALL a new EGR valve. CLEAR DTC. To validate fix drive vehicle between 30 mph (48 kph) and 40 mph (64 kph). Allow vehicle to idle for 2 minutes. |

**PINPOINT TEST B : DIAGNOSTIC TROUBLE CODE (DTC) P0405 INDICATES EXHAUST GAS RECIRCULATION (EGR) VALVE MALFUNCTION, SHORT TO BATTERY/12VOLTS**

| TEST CONDITIONS | DETAILS/RESULTS/ACTIONS |
|---|---|
| **B1: CHECK FOR A SHORT TO BATTERY VOLTAGE** | |
| | 1 Disconnect the EGR valve electrical connectror PI 15. |
| | 2 TURN ignition switch to the ON position. |
| | 3 Measure the voltage at PI 15 pin 4 (YU). |
| | Is the voltage more than 1 volt?<br>**Yes**<br>GO to B2.<br>**No**<br>GO to B3. |
| **B2: CHECK FOR A SHORT TO BATTERY VOLTAGE IN ECM** | |
| | 1 Disconnect ECM electrical connector PI 1. |
| | 2 Measure the voltage at PI 15 pin 4 (YU). |
| | Is the voltage more than 1 volt?<br>**Yes**<br>REPAIR circuit between the PI 1 pin 57 (YU) and the EGR valve electrical connector PI 15 pin 4 (YU). CLEAR DTC. To validate fix drive vehicle between 30 mph (48 kph) and 40 mph (64 kph). Allow vehicle to idle for 2 minutes.<br>**No**<br>INSTALL a new ECM. REFER to Section 303-14A Electronic Engine Controls / 303-14B Electronic Engine Controls / 303-14C Electronic Engine Controls.CLEAR DTC. To validate fix drive vehicle between 30 mph (48 kph) and 40 mph (64 kph). Allow vehicle to idle for 2 minutes. |
| **B3: CHECK FOR A SHORT TO BATTERY VOLTAGE** | |
| | 1 Measure the voltage at PI 15 pin 1 (YG). |
| | Is the voltage more than 1 volt?<br>**Yes**<br>GO to B4.<br>**No**<br>GO to B5. |
| **B4: CHECK FOR A SHORT TO BATTERY VOLTAGE IN ECM** | |
| | 1 Disconnect ECM electrical connector PI 1. |
| | 2 Measure the voltage at PI 15 pin 1 (YG). |
| | Is the voltage more than 1 volt?<br>**Yes**<br>REPAIR circuit between the PI 1 pin 58 (YG) and the EGR valve electrical connector PI 15 pin 1 (YG). CLEAR DTC. To validate fix drive vehicle between 30 mph (48 kph) and 40 mph (64 kph). Allow vehicle to idle for 2 minutes.<br>**No**<br>INSTALL a new ECM. REFER to Section 303-14A Electronic Engine Controls / 303-14B Electronic Engine Controls / 303-14C Electronic Engine Controls.CLEAR DTC. To validate fix drive vehicle between 30 mph (48 kph) and 40 mph (64 kph). Allow vehicle to idle for 2 minutes. |
| **B5: CHECK FOR A SHORT TO BATTERY VOLTAGE** | |
| | 1 Measure the voltage at PI 15 pin 6 (YR). |
| | Is the voltage more than 1 Volt?<br>**Yes**<br>GO to B6.<br>**No**<br>GO to B7. |
| **B6: CHECK FOR A SHORT TO BATTERY VOLTAGE IN ECM** | |
| | 1 Disconnect ECM electrical connector PI 1. |
| | 2 Measure the voltage at PI 15 pin 6 (YR). |
| | Is the voltage more than 1 volt?<br>**Yes**<br>REPAIR circuit between the PI 1 pin 59 (YR) and the EGR valve electrical connector PI 15 pin 6 (YR). CLEAR DTC. To validate fix drive vehicle between 30 mph (48 kph) and 40 mph (64 kph). Allow vehicle to idle for 2 minutes.<br>**No**<br>INSTALL a new ECM. REFER to Section 303-14A Electronic Engine Controls / 303-14B Electronic Engine Controls / 303-14C Electronic Engine Controls.CLEAR DTC. To validate fix drive vehicle between 30 mph (48 kph) and 40 mph (64 kph). Allow vehicle to idle for 2 minutes. |

OEM-ELECTRONICS.com

| | |
|---|---|
| **B7: CHECK FOR A SHORT TO BATTERY VOLTAGE** | |
| | 1 Measure the voltage at PI 15 pin 3 (YU). |
| | Is the voltage more than 1 Volt?<br>**Yes**<br>GO to B8.<br>**No**<br>INSTALL a new EGR valve. CLEAR DTC. To validate fix drive vehicle between 30 mph (48 kph) and 40 mph (64 kph). Allow vehicle to idle for 2 minutes. |
| **B8: CHECK FOR A SHORT TO BATTERY VOLTAGE IN ECM** | |
| | 1 Disconnect ECM electrical connector PI 1. |
| | 2 Measure the voltage at PI 15 pin 3 (YU). |
| | Is the voltage more than 1 volt?<br>**Yes**<br>REPAIR circuit between the PI 1 pin 60 (YU) and the EGR valve electrical connector PI 15 pin 3 (YU). CLEAR DTC. To validate fix drive vehicle between 30 mph (48 kph) and 40 mph (64 kph). Allow vehicle to idle for 2 minutes.<br>**No**<br>INSTALL a new ECM. REFER to Section 303-14A Electronic Engine Controls / 303-14B Electronic Engine Controls / 303-14C Electronic Engine Controls.CLEAR DTC. To validate fix drive vehicle between 30 mph (48 kph) and 40 mph (64 kph). Allow vehicle to idle for 2 minutes. |

**PINPOINT TEST C : DIAGNOSTIC TROUBLE CODE (DTC) P0406 INDICATES EXHAUST GAS RECIRCULATION (EGR) VALVE MALFUNCTION, SHORT TO GROUND/OPEN CIRCUIT.**

| TEST CONDITIONS | DETAILS/RESULTS/ACTIONS |
|---|---|
| **C1: CHECK FOR A SHORT TO GROUND** | |
| | 1 Disconnect the EGR valve electrical connectror PI 15. |
| | 2 Disconnect the engine control module (ECM) electrical connectror PI 1. |
| | 3 Measure the resistance between the EGR valve electrical connector PI 15 pin 4 (YU) and GROUND. |
| | Is the resistance less than 10,000 ohms?<br>**Yes**<br>REPAIR the circuit between EGR valve electrical connector PI 15 pin 4 (YU) and ECM electrical connector PI 1 pin 57 (YU). CLEAR DTC. To validate fix drive vehicle between 30 mph (48 kph) and 40 mph (64 kph). Allow vehicle to idle for 2 minutes.<br>**No**<br>GO to C2. |
| **C2: CHECK FOR AN OPEN CIRCUIT** | |
| | 1 Measure the resistance between the EGR valve electrical connector PI 15 pin 4 (YU) and ECM electrical connector PI 1 pin 57 (YU). |
| | Is the resistance more than 5.0 ohms?<br>**Yes**<br>REPAIR the circuit between EGR valve electrical connector PI 15 pin 4 (YU) and ECM electrical connector PI 1 pin 57 (YU). CLEAR DTC. To validate fix drive vehicle between 30 mph (48 kph) and 40 mph (64 kph). Allow vehicle to idle for 2 minutes.<br>**No**<br>GO to C3. |
| **C3: CHECK FOR A SHORT TO GROUND** | |
| | 1 Measure the resistance between the EGR valve electrical connector PI 15 pin 1 (YG) and GROUND. |
| | Is the resistance less than 10,000 ohms?<br>**Yes**<br>REPAIR the circuit between EGR valve electrical connector PI 15 pin 1 (YG) and ECM electrical connector PI 1 pin 58 (YG). CLEAR DTC. To validate fix drive vehicle between 30 mph (48 kph) and 40 mph (64 kph). Allow vehicle to idle for 2 minutes.<br>**No**<br>GO to C4. |
| **C4: CHECK FOR AN OPEN CIRCUIT** | |
| | 1 Measure the resistance between the EGR valve electrical connector PI 15 pin 1 (YG) and ECM electrical connector PI 1 pin 58 (YG). |
| | Is the resistance more than 5.0 Ohms?<br>**Yes**<br>REPAIR the circuit between EGR valve electrical connector PI 15 pin 1 (YG) and ECM electrical connector PI 1 pin 58 (YG). CLEAR DTC. To validate fix drive vehicle between 30 mph (48 kph) and 40 mph (64 kph). Allow vehicle to idle for 2 minutes.<br>**No**<br>GO to C5. |
| **C5: CHECK FOR A SHORT TO GROUND** | |
| | 1 Measure the resistance between the EGR valve electrical connector PI 15 pin 6 (YR) and GROUND. |
| | Is the resistance less than 10,000 ohms?<br>**Yes**<br>REPAIR the circuit between EGR valve electrical connector PI 15 pin 6 (YR) and ECM electrical connector PI 1 pin 59 (YR). CLEAR DTC. TEST the system for normal operation.<br>**No**<br>GO to C6. |
| **C6: CHECK FOR AN OPEN CIRCUIT** | |
| | 1 Measure the resistance between the EGR valve electrical connector PI 15 pin 6 (YR) and ECM electrical connector PI 1 pin 59 (YR). |
| | Is the resistance more than 5.0 Ohms?<br>**Yes**<br>REPAIR the circuit between EGR valve electrical connector PI 15 pin 6 (YR) and ECM electrical connector PI 1 pin 59 (YR). CLEAR DTC. TEST the system for normal operation.<br>**No**<br>GO to C7. |
| **C7: CHECK FOR A SHORT TO GROUND** | |
| | 1 Measure the resistance between the EGR valve electrical connector PI 15 pin 3 (YU) and GROUND. |
| | Is the resistance less than 10,000 ohms?<br>**Yes**<br>REPAIR the circuit between EGR valve electrical connector PI 15 pin 3 (YU) and ECM electrical connector PI 1 pin 60 (YU). CLEAR DTC. TEST the system for normal operation.<br>**No** |

GETtheMANUALS.org

| | |
|---|---|
| | GO to C8. |
| **C8: CHECK FOR AN OPEN CIRCUIT** | |
| | 1 Measure the resistance between the EGR valve electrical connector PI 15 pin 3 (Yu) and ECM electrical connector PI 1 pin 60 (YU). |
| | Is the resistance more than 5.0 Ohms?<br>**Yes**<br>REPAIR the circuit between EGR valve electrical connector PI 15 pin 3 (YU) and ECM electrical connector PI 1 pin 60 (YU). CLEAR DTC. TEST the system for normal operation.<br>**No**<br>INSTALL a new EGR valve. CLEAR DTC. TEST the system for normal operation. If DTC is repeated INSTALL a new ECM. CLEAR DTC. TEST the system for normal operation. |

GETtheMANUALS.org

# Engine Emission Control - V8 4.2L Petrol/V8 S/C 4.2L Petrol/2.5L NA V6 - AJV6/3.0L NA V6 - AJ27 - Engine Emission ControlVIN Range: N52048->N80180

Diagnosis and Testing

## Overview

There are changes to the engine management system (EMS) for 2006 my, the most obvious of which will be the change to 7-digit diagnostic trouble codes (DTCs) from the familiar 5-digit, and the introduction of secondary air injection.

For additional information on the operation of the emission control systems.
REFER to: Engine Emission Control - VIN Range: N52048->N99999 (303-08A Engine Emission Control - V8 4.2L Petrol/V8 S/C 4.2L Petrol/2.5L NA V6 - AJV6/3.0L NA V6 - AJ27, Description and Operation).

## Inspection and verification

1. **1.** Verify the customer concern.
2. **2.** Visually inspect for obvious signs of mechanical or electrical damage.

**Visual Inspection Chart**

| Mechanical | Electrical |
|---|---|
| • Engine breather hoses<br>• Cyclone separator<br>• Exhaust gas recirculation (EGR) pipes (check for cracks)<br>• EGR valve | • Fuses<br>• Wiring harness<br>• Loose or corroded electrical connectors<br>• Sensor(s)<br>• Stepper motor(s)<br>• Secondary air injection pump<br>• Secondary air injection control valve<br>• Engine control module (ECM) |

3. **3.** If an obvious cause for an observed or reported concern is found, correct the cause (if possible) before proceeding to the next step.
4. **4.** If the cause is not visually evident use the Jaguar approved diagnostic system or a scan tool to retrieve the fault codes before proceeding to the diagnostic trouble code (DTC) Index.

**Symptom Chart**

| Symptom (general) | Symptom (specific) | Possible source | Action |
|---|---|---|---|
| Non-Start | Engine cranks, but does not fire | • Engine breather system disconnected/restricted | Check the engine breather system hoses, separator, etc. Rectify as necessary. |
| Difficult to start | Difficult to start cold | • Exhaust gas recirculation (EGR) valve stuck open | Check the EGR valve,<br>REFER to: Exhaust Gas Recirculation (EGR) Valve (303-08A Engine Emission Control - V8 4.2L Petrol/V8 S/C 4.2L Petrol/2.5L NA V6 - AJV6/3.0L NA V6 - AJ27, Removal and Installation).<br>Check the pipework. |
| Engine stalls | Engine stalls soon after start | • Breather system disconnected/restricted | Check the engine breather system hoses, separator, etc. Rectify as necessary. |
| | Engine stops/stalls | • EGR valve stuck open | Check the EGR valve.<br>REFER to: Exhaust Gas Recirculation (EGR) Valve (303-08A Engine Emission Control - V8 4.2L Petrol/V8 S/C 4.2L Petrol/2.5L NA V6 - AJV6/3.0L NA V6 - AJ27, Removal and Installation). |
| Rough running | Poor idle quality | • EGR valve stuck open | Check the EGR valve.<br>REFER to: Exhaust Gas Recirculation (EGR) Valve (303-08A Engine Emission Control - V8 4.2L Petrol/V8 S/C 4.2L Petrol/2.5L NA V6 - AJV6/3.0L NA V6 - AJ27, Removal and Installation). |
| Poor driveability | Engine hesitates/poor acceleration | • EGR valve stuck open | Check the EGR valve.<br>REFER to: Exhaust Gas Recirculation (EGR) Valve (303-08A Engine Emission Control - V8 4.2L Petrol/V8 S/C 4.2L Petrol/2.5L NA V6 - AJV6/3.0L NA V6 - AJ27, Removal and Installation). |
| | Poor throttle response | • Breather system disconnected/restricted | Check the engine breather system hoses, separator, etc. Rectify as necessary. |
| Excessive: | • Fuel consumption<br>• Black smoke<br>• Emissions | • EGR valve stuck open<br>• EGR system not operating<br>• Crankcase ventilation system restricted | Check the EGR valve.<br>REFER to: Exhaust Gas Recirculation (EGR) Valve (303-08A Engine Emission Control - V8 4.2L Petrol/V8 S/C 4.2L Petrol/2.5L NA V6 - AJV6/3.0L NA V6 - AJ27, Removal and Installation).<br>For EGR valve circuit tests. GO to Pinpoint Test A. Check the engine breather system hoses, separator, etc. Rectify as necessary. |
| Noisy | Loud 'ticking' noise with engine running | • EGR pipes cracked | Inspect the EGR pipes, paying particular attention to the ribbed sections. Replace as necessary. |
| Oil leakage | Engine oil leaks | • Crankcase ventilation system restricted | Check the engine breather system hoses, separator, etc. Rectify as necessary. |

## DTC index

GETtheMANUALS.org

• NOTE: Generic scan tools may not read the codes listed, or may read only 5-digit codes. Match the 5 digits from the scan tool to the first 5 digits of the 7-digit code listed to identify the fault (the last 2 digits give extra information read by the manufacturer-approved diagnostic

system).

• NOTE: For a full list of DTCs.
REFER to: Electronic Engine Controls - VIN Range: N52048->N80180 (303-14A Electronic Engine Controls - 2.5L NA V6 - AJV6/3.0L NA V6 - AJ27, Diagnosis and Testing).
or
REFER to: Electronic Engine Controls - VIN Range: N52048->N80180 (303-14B Electronic Engine Controls - V8 4.2L Petrol/V8 S/C 4.2L Petrol, Diagnosis and Testing).

| DTC | Description | Possible causes | Action |
|---|---|---|---|
| P040100 | EGR flow insufficient | • EGR valve incorrectly fitted or loose<br>• EGR valve stuck closed, blocked<br>• EGR pipe blocked<br>• EGR valve mechanical failure | Check the installation of the EGR valve.<br>REFER to: Exhaust Gas Recirculation (EGR) Valve (303-08A Engine Emission Control - V8 4.2L Petrol/V8 S/C 4.2L Petrol/2.5L NA V6 - AJV6/3.0L NA V6 - AJ27, Removal and Installation).<br>Check the EGR pipework. |
| P041300 | Secondary air injection control valve circuit | • Secondary air injection control valve control circuit: short circuit to power | For Secondary air injection control valve circuit tests, GO to Pinpoint Test D. |
| P041400 | Secondary air injection control valve circuit | • Secondary air injection control valve control circuit: short circuit to ground<br>• Secondary air injection control valve control circuit: high resistance | For Secondary air injection control valve circuit tests, GO to Pinpoint Test D. |
| P048900 | EGR control circuit low | • EGR valve power supply circuit: short circuit to ground<br>• EGR valve power supply circuit: high resistance | For EGR stepper circuit tests, GO to Pinpoint Test A. |
| P049000 | EGR control circuit high | • EGR valve to ECM drive circuit: short circuit to power | For EGR stepper circuit tests, GO to Pinpoint Test A. |
| P243100 | Secondary air injection system air flow/pressure sensor circuit range/performance | • Secondary air injection manifold pressure (MAP) sensor performance | For Secondary air injection MAP sensor tests, GO to Pinpoint Test C. |
| P243200 | Secondary air injection system air flow/pressure sensor circuit low | • Secondary air injection MAP sensor circuit: short circuit to ground<br>• Secondary air injection MAP sensor circuit: high resistance | For Secondary air injection MAP sensor tests, GO to Pinpoint Test C. |
| P243300 | Secondary air injection system air flow/pressure sensor circuit high | • Secondary air injection MAP sensor circuit: short circuit to power | For Secondary air injection MAP sensor tests, GO to Pinpoint Test C. |
| P244400 | Secondary air injection pump stuck **ON** | • Secondary air injection pump control circuit: short circuit to ground | For Secondary air injection pump circuit tests, GO to Pinpoint Test B. |
| P244500 | Secondary air injection pump stuck **OFF** | • Secondary air injection pump control circuit: short circuit to power | For Secondary air injection pump circuit tests, GO to Pinpoint Test B. |

## Pinpoint tests

CAUTION: When probing connectors to take measurements in the course of the pinpoint tests, use the adaptor kit, part number 3548-1358-00.

• NOTE: When performing electrical voltage or resistance tests, always use a digital multimeter (DMM) accurate to 3 decimal places, and with an up-to-date calibration certificate. When testing resistance, always take the resistance of the DMM leads into account.

• NOTE: Check and rectify basic faults before beginning diagnostic routines involving pinpoint tests.

**PINPOINT TEST A : CHECK THE EGR STEPPER SUPPLY AND CONTROL CIRCUITS**

• NOTE: Check for DTCs indicating an air filter solenoid, purge valve or mass air flow meter fault before carrying out EGR stepper supply voltage pinpoint tests.

| TEST CONDITIONS | DETAILS/RESULTS/ACTIONS |
|---|---|
| **A1: CHECK THE EGR STEPPER SUPPLY VOLTAGE CIRCUITS** | |
| | 1 Key off. |
| | 2 Disconnect the EGR stepper electrical connector, PI15. |
| | 3 Key on, ignition off.<br>• Make sure the EMS relay is energized. |
| | 4 Measure the voltage between: |

| EGR stepper connector PI15, harness side | Battery |
|---|---|
| Pin 02 | Negative terminal |
| Pin 05 | |

GETtheMANUALS.org

Is either voltage less than 10 volts?

**Yes**

REPAIR the relevant EGR stepper supply voltage circuit. This circuit includes the front power distribution box (fuse 37) and the EMS control relay. For additional information, refer to the wiring diagrams. CLEAR the DTCs and test the system for normal operation.

**No**

GO to A2.

**A2: CHECK THE EGR STEPPER CONTROL CIRCUITS FOR SHORT CIRCUIT TO GROUND**

1. Key off.
2. Measure the resistance between:

| EGR stepper connector PI15, harness side | Battery |
|---|---|
| Pin 04 | Negative terminal |
| Pin 01 | |
| Pin 06 | |
| Pin 03 | |

Are any of the resistances less than 10,000 ohms?

**Yes**

REPAIR the short circuit. For additional information, refer to the wiring diagrams. CLEAR the DTCs and test the system for normal operation.

**No**

GO to A3.

**A3: CHECK THE EGR STEPPER CONTROL CIRCUITS FOR SHORT CIRCUIT TO POWER**

1. Measure the resistance between:

| EGR stepper connector PI15, harness side | Battery |
|---|---|
| Pin 04 | Positive terminal |
| Pin 01 | |
| Pin 06 | |
| Pin 03 | |

Are any of the resistances less than 10,000 ohms?

**Yes**

REPAIR the short circuit. For additional information, refer to the wiring diagrams. CLEAR the DTCs and test the system for normal operation.

**No**

GO to A4.

**A4: CHECK THE EGR STEPPER CONTROL CIRCUITS FOR HIGH RESISTANCE**

1. Key off.
2. Disconnect the ECM electrical connector, PI300.
3. Measure the resistance between:

| EGR stepper connector PI15, harness side | ECM connector PI300, harness side |
|---|---|
| Pin 04 | Pin 53 |
| Pin 01 | Pin 52 |
| Pin 06 | Pin 51 |
| Pin 03 | Pin 50 |

Are any of the resistances less than 10,000 ohms?

**Yes**

REPAIR the high resistance circuit. For additional information, refer to the wiring diagrams. CLEAR the DTC and test the system for normal operation.

**No**

CHECK for DTCs. Refer to the DTC index.

## PINPOINT TEST B : CHECK THE SECONDARY AIR INJECTION PUMP CIRCUITS

| TEST CONDITIONS | DETAILS/RESULTS/ACTIONS |
|---|---|

**B1: CHECK THE SECONDARY AIR INJECTION PUMP RELAY SUPPLY VOLTAGES**

1. Key off.
2. Remove the secondary air injection pump relay.
3. Measure the voltage between:

| Secondary air injection relay base | Battery |
|---|---|
| Pin 01 | Negative terminal |
| Pin 05 | |

Is either voltage less than 10 volts?

**Yes**

REPAIR the circuit between the secondary air injection relay base and battery. This circuit includes fuse 31 of the front power distribution box. For additional information, refer to the wiring diagrams. CLEAR the DTC and test the system for normal operation.

**No**

GO to B2.

**B2: CHECK THE SECONDARY AIR INJECTION RELAY TO AIR PUMP SUPPLY CIRCUIT FOR SHORT CIRCUIT TO GROUND**

1. Disconnect the secondary air injection pump electrical connector, FH310.
2. Measure the resistance between:

| Secondary air injection relay base | Battery |
|---|---|
| Pin 03 | Negative terminal |

Is the resistance less than 10,000 ohms?

**Yes**

REPAIR the short circuit. For additional information, refer to the wiring diagrams. CLEAR the DTC and test the system for normal operation.

**No**

GO to B3.

**B3: CHECK THE SECONDARY AIR INJECTION RELAY TO AIR PUMP SUPPLY CIRCUIT FOR SHORT CIRCUIT TO POWER**

1. Measure the resistance between:

| Secondary air injection relay base | Battery |
|---|---|
| Pin 03 | Positive terminal |

GETtheMANUALS.org

Is the resistance less than 10,000 ohms?

**Yes**

REPAIR the short circuit. For additional information, refer to the wiring diagrams. CLEAR the DTC and test the system for normal operation.

**No**

GO to B4.

**B4: CHECK THE SECONDARY AIR INJECTION PUMP SIGNAL CIRCUIT FOR SHORT CIRCUIT TO GROUND**

1 Measure the resistance between:

| Secondary air injection relay base | Battery |
|---|---|
| Pin 02 | Negative terminal |

Is the resistance less than 10,000 ohms?

**Yes**

REPAIR the short circuit. For additional information, refer to the wiring diagrams. CLEAR the DTC and test the system for normal operation.

**No**

GO to B5.

**B5: CHECK THE SECONDARY AIR INJECTION PUMP SIGNAL CIRCUIT FOR SHORT CIRCUIT TO POWER**

1 Measure the resistance between:

| Secondary air injection relay base | Battery |
|---|---|
| Pin 02 | Positive terminal |

Is the resistance less than 10,000 ohms?

**Yes**

REPAIR the short circuit. For additional information, refer to the wiring diagrams. CLEAR the DTC and test the system for normal operation.

**No**

GO to B6.

**B6: CHECK THE SECONDARY AIR INJECTION RELAY TO AIR PUMP SUPPLY CIRCUIT FOR HIGH RESISTANCE**

1 Measure the resistance between:

| Secondary air injection relay base | Secondary air injection pump connector FH310, harness side |
|---|---|
| Pin 03 | Pin 02 |

Is the resistance greater than 5 ohms?

**Yes**

REPAIR the high resistance circuit. For additional information, refer to the wiring diagrams. CLEAR the DTC and test the system for normal operation.

**No**

GO to B7.

**B7: CHECK THE SECONDARY AIR INJECTION PUMP GROUND CIRCUIT FOR HIGH RESISTANCE**

1 Measure the resistance between:

| Secondary air injection pump connector FH310, harness side | Battery |
|---|---|
| Pin 01 | Negative terminal |

Is the resistance greater than 5 ohms?

**Yes**

REPAIR the high resistance circuit. For additional information, refer to the wiring diagrams. CLEAR the DTC and test the system for normal operation.

**No**

GO to B8.

**B8: CHECK THE SECONDARY AIR INJECTION PUMP SIGNAL CIRCUIT FOR HIGH RESISTANCE**

1 Disconnect the ECM electrical connector, FH300.

2 Measure the resistance between:

| Secondary air injection relay base | ECM connector FH300, harness side |
|---|---|
| Pin 02 | Pin 52 |

Is the resistance greater than 5 ohms?

**Yes**

REPAIR the high resistance circuit. For additional information, refer to the wiring diagrams. CLEAR the DTC and test the system for normal operation.

**No**

INSTALL a new secondary air injection pump relay. CLEAR the DTC and test the system for normal operation.

## PINPOINT TEST C : (N/A FEDERAL SPECIFICATION ONLY) CHECK THE SECONDARY AIR INJECTION MAP SENSOR CIRCUITS

| TEST CONDITIONS | DETAILS/RESULTS/ACTIONS |
|---|---|

**C1: CHECK THE SECONDARY AIR INJECTION MAP SENSOR SUPPLY CIRCUIT FOR SHORT CIRCUIT TO GROUND**

1 Key off.

2 Disconnect the secondary air injection MAP sensor electrical connector, FH312.

3 Measure the resistance between:

| Secondary air injection MAP sensor connector FH312, harness side | Battery |
|---|---|
| Pin 01 | Negative terminal |

Is the resistance less than 10,000 ohms?

**Yes**

REPAIR the short circuit. For additional information, refer to the wiring diagrams. CLEAR the DTC and test the system for normal operation.

**No**

GO to C2.

**C2: CHECK THE SECONDARY AIR INJECTION MAP SENSOR SUPPLY CIRCUIT FOR SHORT CIRCUIT TO POWER**

1 Measure the resistance between:

| Secondary air injection MAP sensor connector FH312, harness side | Battery |
|---|---|
| Pin 01 | Positive terminal |

Is the resistance less than 10,000 ohms?

**Yes**

REPAIR the short circuit. For additional information, refer to the wiring diagrams. CLEAR the DTC and test the system for normal operation.

**No**

GO to C3.

GETtheMANUALS.org

**C3: CHECK THE SECONDARY AIR INJECTION MAP SENSOR SIGNAL CIRCUIT FOR SHORT CIRCUIT TO GROUND**

| | |
|---|---|
| | 1 Measure the resistance between: |

| Secondary air injection MAP sensor connector FH312, harness side | Battery |
|---|---|
| Pin 02 | Negative terminal |

Is the resistance less than 10,000 ohms?

**Yes**

REPAIR the short circuit. For additional information, refer to the wiring diagrams. CLEAR the DTC and test the system for normal operation.

**No**

GO to C4.

**C4: CHECK THE SECONDARY AIR INJECTION MAP SENSOR SIGNAL CIRCUIT FOR SHORT CIRCUIT TO POWER**

1 Measure the resistance between:

| Secondary air injection MAP sensor connector FH312, harness side | Battery |
|---|---|
| Pin 02 | Positive terminal |

Is the resistance less than 10,000 ohms?

**Yes**

REPAIR the short circuit. For additional information, refer to the wiring diagrams. CLEAR the DTC and test the system for normal operation.

**No**

GO to C5.

**C5: CHECK THE SECONDARY AIR INJECTION MAP SENSOR SUPPLY CIRCUIT FOR HIGH RESISTANCE**

1 Disconnect the ECM electrical connector, FH300.

2 Measure the resistance between:

| Secondary air injection MAP sensor connector FH312, harness side | ECM connector FH300, harness side |
|---|---|
| Pin 01 | Pin 19 |

Is the resistance greater than 5 ohms?

**Yes**

REPAIR the high resistance circuit. For additional information, refer to the wiring diagrams. CLEAR the DTC and test the system for normal operation.

**No**

GO to C6.

**C6: CHECK THE SECONDARY AIR INJECTION MAP SENSOR SIGNAL CIRCUIT FOR HIGH RESISTANCE**

1 Measure the resistance between:

| Secondary air injection MAP sensor connector FH312, harness side | ECM connector FH300, harness side |
|---|---|
| Pin 02 | Pin 13 |

Is the resistance greater than 5 ohms?

**Yes**

REPAIR the high resistance circuit. For additional information, refer to the wiring diagrams. CLEAR the DTC and test the system for normal operation.

**No**

GO to C7.

**C7: CHECK THE SECONDARY AIR INJECTION MAP SENSOR GROUND CIRCUIT FOR HIGH RESISTANCE**

1 Measure the resistance between:

| Secondary air injection MAP sensor connector FH312, harness side | ECM connector FH300, harness side |
|---|---|
| Pin 03 | Pin 07 |

Is the resistance greater than 5 ohms?

**Yes**

REPAIR the high resistance circuit. For additional information, refer to the wiring diagrams. CLEAR the DTC and test the system for normal operation.

**No**

INSTALL a new secondary air injection MAP sensor. CLEAR the DTC and test the system for normal operation.

## PINPOINT TEST D : CHECK THE SECONDARY AIR INJECTION CONTROL VALVE CIRCUITS

| TEST CONDITIONS | DETAILS/RESULTS/ACTIONS |
|---|---|

**D1: CHECK THE SECONDARY AIR INJECTION CONTROL VALVE SUPPLY VOLTAGE**

1 Key off.

2 Disconnect the secondary air injection control valve electrical connector, PI302.

3 Key on, engine off.

4 Measure the voltage between:

| Secondary air injection control valve connector PI302, harness side | Battery |
|---|---|
| Pin 01 | Negative terminal |

Is the voltage less than 10 volts?

**Yes**

REPAIR the supply circuit between the secondary air injection control valve and battery. This circuit includes fuse 2 of the front power distribution. For additional information, refer to the wiring diagrams. CLEAR the DTC and test the system for normal operation.

**No**

GO to D2.

**D2: CHECK THE SECONDARY AIR INJECTION CONTROL VALVE CONTROL CIRCUIT FOR SHORT CIRCUIT TO GROUND**

1 Measure the resistance between:

| Secondary air injection control valve connector PI302, harness side | Battery |
|---|---|
| Pin 02 | Negative terminal |

Is the resistance less than 10,000 ohms?

**Yes**

REPAIR the short circuit. For additional information, refer to the wiring diagrams. CLEAR the DTC and test the system for normal operation.

**No**

GO to D3.

**D3: CHECK THE SECONDARY AIR INJECTION CONTROL VALVE CONTROL CIRCUIT FOR SHORT CIRCUIT TO POWER**

1 Measure the resistance between:

| Secondary air injection control valve connector PI302, harness side | Battery |
|---|---|
| Pin 02 | Positive terminal |

GETtheMANUALS.org

Is the resistance less than 10,000 ohms?

**Yes**

REPAIR the short circuit. For additional information, refer to the wiring diagrams. CLEAR the DTC and test the system for normal operation.

**No**

GO to D4.

**D4: CHECK THE SECONDARY AIR INJECTION CONTROL VALVE CONTROL CIRCUIT FOR HIGH RESISTANCE**

1. Disconnect the ECM electrical connector, FH300.
2. Measure the resistance between:

| Secondary air injection control valve connector PI302, harness side | ECM connector FH300, harness side |
|---|---|
| Pin 02 | Pin 55 |

Is the resistance greater than 5 ohms?

**Yes**

REPAIR the high resistance circuit. For additional information, refer to the wiring diagrams. CLEAR the DTC and test the system for normal operation.

**No**

INSTALL a new secondary air injection control valve.
REFER to: Secondary Air Injection (AIR) Control Valve - 3.0L (303-08A Engine Emission Control - V8 4.2L Petrol/V8 S/C 4.2L Petrol/2.5L NA V6 - AJV6/3.0L NA V6 - AJ27, Removal and Installation) /
Secondary Air Injection (AIR) Control Valve - 4.2L, Vehicles Without: Supercharger (303-08A Engine Emission Control - V8 4.2L Petrol/V8 S/C 4.2L Petrol/2.5L NA V6 - AJV6/3.0L NA V6 - AJ27, Removal and Installation) /
Secondary Air Injection (AIR) Control Valve - 4.2L, Vehicles With: Supercharger (303-08A Engine Emission Control - V8 4.2L Petrol/V8 S/C 4.2L Petrol/2.5L NA V6 - AJV6/3.0L NA V6 - AJ27, Removal and Installation).
CLEAR the DTC and test the system for normal operation.

GETtheMANUALS.org

# Engine Emission Control - V8 4.2L Petrol / V8 S/C 4.2L Petrol / 2.5L NA V6 - AJV6 / 3.0L NA V6 - AJ27 - Engine Emission ControlVIN Range: N80181->R99999

Diagnosis and Testing

## Inspection and verification

1. **1.** Verify the customer concern.
2. **2.** Visually inspect for obvious signs of mechanical or electrical damage.

**Visual Inspection Chart**

| Mechanical | Electrical |
|---|---|
| • Engine breather hoses<br>• Cyclone separator<br>• Exhaust gas recirculation (EGR) pipes (check for cracks)<br>• EGR valve | • Fuses<br>• Wiring harness<br>• Loose or corroded electrical connectors<br>• Sensor(s)<br>• Stepper motor(s)<br>• Secondary air injection pump<br>• Secondary air injection control valve<br>• Engine control module (ECM) |

3. **3.** If an obvious cause for an observed or reported concern is found, correct the cause (if possible) before proceeding to the next step.
4. **4.** If the cause is not visually evident use the Jaguar approved diagnostic system or a scan tool to retrieve the fault codes before proceeding to the diagnostic trouble code (DTC) Index.

**Symptom Chart**

| Symptom (general) | Symptom (specific) | Possible source | Action |
|---|---|---|---|
| Non-Start | Engine cranks, but does not fire | • Engine breather system disconnected/restricted | Check the engine breather system hoses, separator, etc. Rectify as necessary. |
| Difficult to start | Difficult to start cold | • Exhaust gas recirculation (EGR) valve stuck open | Check the EGR valve,<br>REFER to: Exhaust Gas Recirculation (EGR) Valve (303-08A Engine Emission Control - V8 4.2L Petrol/V8 S/C 4.2L Petrol/2.5L NA V6 - AJV6/3.0L NA V6 - AJ27, Removal and Installation).<br>Check the pipework. |
| Engine stalls | Engine stalls soon after start | • Breather system disconnected/restricted | Check the engine breather system hoses, separator, etc. Rectify as necessary. |
| | Engine stops/stalls | • EGR valve stuck open | Check the EGR valve.<br>REFER to: Exhaust Gas Recirculation (EGR) Valve (303-08A Engine Emission Control - V8 4.2L Petrol/V8 S/C 4.2L Petrol/2.5L NA V6 - AJV6/3.0L NA V6 - AJ27, Removal and Installation). |
| Rough running | Poor idle quality | • EGR valve stuck open | Check the EGR valve.<br>REFER to: Exhaust Gas Recirculation (EGR) Valve (303-08A Engine Emission Control - V8 4.2L Petrol/V8 S/C 4.2L Petrol/2.5L NA V6 - AJV6/3.0L NA V6 - AJ27, Removal and Installation). |
| Poor driveability | Engine hesitates/poor acceleration | • EGR valve stuck open | Check the EGR valve.<br>REFER to: Exhaust Gas Recirculation (EGR) Valve (303-08A Engine Emission Control - V8 4.2L Petrol/V8 S/C 4.2L Petrol/2.5L NA V6 - AJV6/3.0L NA V6 - AJ27, Removal and Installation). |
| | Poor throttle response | • Breather system disconnected/restricted | Check the engine breather system hoses, separator, etc. Rectify as necessary. |
| Excessive: | • Fuel consumption<br>• Black smoke<br>• Emissions | • EGR valve stuck open<br>• EGR system not operating<br>• Crankcase ventilation system restricted | Check the EGR valve.<br>REFER to: Exhaust Gas Recirculation (EGR) Valve (303-08A Engine Emission Control - V8 4.2L Petrol/V8 S/C 4.2L Petrol/2.5L NA V6 - AJV6/3.0L NA V6 - AJ27, Removal and Installation).<br>For EGR valve circuit tests. GO to Pinpoint Test A. Check the engine breather system hoses, separator, etc. Rectify as necessary. |
| Noisy | Loud 'ticking' noise with engine running | • EGR pipes cracked | Inspect the EGR pipes, paying particular attention to the ribbed sections. Replace as necessary. |
| Oil leakage | Engine oil leaks | • Crankcase ventilation system restricted | Check the engine breather system hoses, separator, etc. Rectify as necessary. |

## DTC index

• NOTE: Generic scan tools may not read the codes listed, or may read only 5-digit codes. Match the 5 digits from the scan tool to the first 5 digits of the 7-digit code listed to identify the fault (the last 2 digits give extra information read by the manufacturer-approved diagnostic system).

• NOTE: For a full list of DTCs.
REFER to: Electronic Engine Controls - VIN Range: N52048->N80180 (303-14A Electronic Engine Controls - 2.5L NA V6 - AJV6/3.0L NA V6 - AJ27, Diagnosis and Testing).
or
REFER to: Electronic Engine Controls - VIN Range: N52048->N80180 (303-14B Electronic Engine Controls - V8 4.2L Petrol/V8 S/C 4.2L Petrol, Diagnosis and Testing).

GETtheMANUALS.org

| DTC | Description | Possible causes | Action |
|---|---|---|---|

| DTC | Description | Possible causes | Action |
|---|---|---|---|
| P040100 | EGR flow insufficient | • EGR valve incorrectly fitted or loose<br>• EGR valve stuck closed, blocked<br>• EGR pipe blocked<br>• EGR valve mechanical failure | Check the installation of the EGR valve.<br>REFER to: Exhaust Gas Recirculation (EGR) Valve (303-08A Engine Emission Control - V8 4.2L Petrol/V8 S/C 4.2L Petrol/2.5L NA V6 - AJV6/3.0L NA V6 - AJ27, Removal and Installation).<br>Check the EGR pipework. |
| P041100 | Secondary air injection system incorrect flow detected | • Secondary air injection control valve incorrectly fitted<br>• Secondary air injection control valve stuck closed, blocked<br>• Secondary air injection control valve pipe blocked<br>• Secondary air injection control valve mechanical failure | Check for secondary air injection system related DTCs. Rectify as necessary. Check the installation of the secondary air injection system. |
| P041300 | Secondary air injection control valve circuit | • Secondary air injection control valve control circuit: short circuit to power | For Secondary air injection control valve circuit tests, GO to Pinpoint Test D. |
| P041400 | Secondary air injection control valve circuit | • Secondary air injection control valve control circuit: short circuit to ground<br>• Secondary air injection control valve control circuit: high resistance | For Secondary air injection control valve circuit tests, GO to Pinpoint Test D. |
| P048900 | EGR control circuit low | • EGR valve power supply circuit: short circuit to ground<br>• EGR valve power supply circuit: high resistance | For EGR stepper circuit tests, GO to Pinpoint Test A. |
| P049000 | EGR control circuit high | • EGR valve to ECM drive circuit: short circuit to power | For EGR stepper circuit tests, GO to Pinpoint Test A. |
| P243100 | Secondary air injection system air flow/pressure sensor circuit range/performance | • Secondary air injection manifold pressure (MAP) sensor performance | For Secondary air injection MAP sensor tests, GO to Pinpoint Test C. |
| P243200 | Secondary air injection system air flow/pressure sensor circuit low | • Secondary air injection MAP sensor circuit: short circuit to ground<br>• Secondary air injection MAP sensor circuit: high resistance | For Secondary air injection MAP sensor tests, GO to Pinpoint Test C. |
| P243300 | Secondary air injection system air flow/pressure sensor circuit high | • Secondary air injection MAP sensor circuit: short circuit to power | For Secondary air injection MAP sensor tests, GO to Pinpoint Test C. |
| P244400 | Secondary air injection pump stuck **ON** | • Secondary air injection pump control circuit: short circuit to ground | For Secondary air injection pump circuit tests, GO to Pinpoint Test B. |
| P244500 | Secondary air injection pump stuck **OFF** | • Secondary air injection pump control circuit: short circuit to power | For Secondary air injection pump circuit tests, GO to Pinpoint Test B. |

## Pinpoint tests

CAUTION: When probing connectors to take measurements in the course of the pinpoint tests, use the adaptor kit, part number 3548-1358-00.

• NOTE: When performing electrical voltage or resistance tests, always use a digital multimeter (DMM) accurate to 3 decimal places, and with an up-to-date calibration certificate. When testing resistance, always take the resistance of the DMM leads into account.

• NOTE: Check and rectify basic faults before beginning diagnostic routines involving pinpoint tests.

### PINPOINT TEST A : CHECK THE EGR STEPPER SUPPLY AND CONTROL CIRCUITS

• NOTE: Check for DTCs indicating an air filter solenoid, purge valve or mass air flow meter fault before carrying out EGR stepper supply voltage pinpoint tests.

| TEST CONDITIONS | DETAILS/RESULTS/ACTIONS |
|---|---|
| **A1: CHECK THE EGR STEPPER SUPPLY VOLTAGE CIRCUITS** | |
| | 1 Key off. |
| | 2 Disconnect the EGR stepper electrical connector, PI15. |
| | 3 Key on, ignition off.<br>• Make sure the EMS relay is energized. |
| | 4 Measure the voltage between: |

| EGR stepper connector PI15, harness side | Battery |
|---|---|
| Pin 02 | Negative terminal |
| Pin 05 | |

GETtheMANUALS.org

Is either voltage less than 10 volts?

**Yes**

REPAIR the relevant EGR stepper supply voltage circuit. This circuit includes the front power distribution box (fuse 37) and the EMS control relay. For additional information, refer to the wiring diagrams. CLEAR the DTCs and test the system for normal operation.

**No**

GO to A2.

**A2: CHECK THE EGR STEPPER CONTROL CIRCUITS FOR SHORT CIRCUIT TO GROUND**

1. Key off.
2. Measure the resistance between:

| EGR stepper connector PI15, harness side | Battery |
|---|---|
| Pin 04 | Negative terminal |
| Pin 01 | |
| Pin 06 | |
| Pin 03 | |

Are any of the resistances less than 10,000 ohms?

**Yes**

REPAIR the short circuit. For additional information, refer to the wiring diagrams. CLEAR the DTCs and test the system for normal operation.

**No**

GO to A3.

**A3: CHECK THE EGR STEPPER CONTROL CIRCUITS FOR SHORT CIRCUIT TO POWER**

1. Measure the resistance between:

| EGR stepper connector PI15, harness side | Battery |
|---|---|
| Pin 04 | Positive terminal |
| Pin 01 | |
| Pin 06 | |
| Pin 03 | |

Are any of the resistances less than 10,000 ohms?

**Yes**

REPAIR the short circuit. For additional information, refer to the wiring diagrams. CLEAR the DTCs and test the system for normal operation.

**No**

GO to A4.

**A4: CHECK THE EGR STEPPER CONTROL CIRCUITS FOR HIGH RESISTANCE**

1. Key off.
2. Disconnect the ECM electrical connector, PI300.
3. Measure the resistance between:

| EGR stepper connector PI15, harness side | ECM connector PI300, harness side |
|---|---|
| Pin 04 | Pin 53 |
| Pin 01 | Pin 52 |
| Pin 06 | Pin 51 |
| Pin 03 | Pin 50 |

Are any of the resistances less than 10,000 ohms?

**Yes**

REPAIR the high resistance circuit. For additional information, refer to the wiring diagrams. CLEAR the DTC and test the system for normal operation.

**No**

CHECK for DTCs. Refer to the DTC index.

## PINPOINT TEST B : CHECK THE SECONDARY AIR INJECTION PUMP CIRCUITS

| TEST CONDITIONS | DETAILS/RESULTS/ACTIONS |
|---|---|

**B1: CHECK THE SECONDARY AIR INJECTION PUMP RELAY SUPPLY VOLTAGES**

1. Key off.
2. Remove the secondary air injection pump relay.
3. Measure the voltage between:

| Secondary air injection relay base | Battery |
|---|---|
| Pin 01 | Negative terminal |
| Pin 05 | |

Is either voltage less than 10 volts?

**Yes**

REPAIR the circuit between the secondary air injection relay base and battery. This circuit includes fuse 31 of the front power distribution box. For additional information, refer to the wiring diagrams. CLEAR the DTC and test the system for normal operation.

**No**

GO to B2.

**B2: CHECK THE SECONDARY AIR INJECTION RELAY TO AIR PUMP SUPPLY CIRCUIT FOR SHORT CIRCUIT TO GROUND**

1. Disconnect the secondary air injection pump electrical connector, FH310.
2. Measure the resistance between:

| Secondary air injection relay base | Battery |
|---|---|
| Pin 03 | Negative terminal |

Is the resistance less than 10,000 ohms?

**Yes**

REPAIR the short circuit. For additional information, refer to the wiring diagrams. CLEAR the DTC and test the system for normal operation.

**No**

GO to B3.

**B3: CHECK THE SECONDARY AIR INJECTION RELAY TO AIR PUMP SUPPLY CIRCUIT FOR SHORT CIRCUIT TO POWER**

1. Measure the resistance between:

| Secondary air injection relay base | Battery |
|---|---|
| Pin 03 | Positive terminal |

GETtheMANUALS.org

Is the resistance less than 10,000 ohms?

**Yes**

REPAIR the short circuit. For additional information, refer to the wiring diagrams. CLEAR the DTC and test the system for normal operation.

**No**

GO to B4.

**B4: CHECK THE SECONDARY AIR INJECTION PUMP SIGNAL CIRCUIT FOR SHORT CIRCUIT TO GROUND**

1 Measure the resistance between:

| Secondary air injection relay base | Battery |
|---|---|
| Pin 02 | Negative terminal |

Is the resistance less than 10,000 ohms?

**Yes**

REPAIR the short circuit. For additional information, refer to the wiring diagrams. CLEAR the DTC and test the system for normal operation.

**No**

GO to B5.

**B5: CHECK THE SECONDARY AIR INJECTION PUMP SIGNAL CIRCUIT FOR SHORT CIRCUIT TO POWER**

1 Measure the resistance between:

| Secondary air injection relay base | Battery |
|---|---|
| Pin 02 | Positive terminal |

Is the resistance less than 10,000 ohms?

**Yes**

REPAIR the short circuit. For additional information, refer to the wiring diagrams. CLEAR the DTC and test the system for normal operation.

**No**

GO to B6.

**B6: CHECK THE SECONDARY AIR INJECTION RELAY TO AIR PUMP SUPPLY CIRCUIT FOR HIGH RESISTANCE**

1 Measure the resistance between:

| Secondary air injection relay base | Secondary air injection pump connector FH310, harness side |
|---|---|
| Pin 03 | Pin 02 |

Is the resistance greater than 5 ohms?

**Yes**

REPAIR the high resistance circuit. For additional information, refer to the wiring diagrams. CLEAR the DTC and test the system for normal operation.

**No**

GO to B7.

**B7: CHECK THE SECONDARY AIR INJECTION PUMP GROUND CIRCUIT FOR HIGH RESISTANCE**

1 Measure the resistance between:

| Secondary air injection pump connector FH310, harness side | Battery |
|---|---|
| Pin 01 | Negative terminal |

Is the resistance greater than 5 ohms?

**Yes**

REPAIR the high resistance circuit. For additional information, refer to the wiring diagrams. CLEAR the DTC and test the system for normal operation.

**No**

GO to B8.

**B8: CHECK THE SECONDARY AIR INJECTION PUMP SIGNAL CIRCUIT FOR HIGH RESISTANCE**

1 Disconnect the ECM electrical connector, FH300.

2 Measure the resistance between:

| Secondary air injection relay base | ECM connector FH300, harness side |
|---|---|
| Pin 02 | Pin 52 |

Is the resistance greater than 5 ohms?

**Yes**

REPAIR the high resistance circuit. For additional information, refer to the wiring diagrams. CLEAR the DTC and test the system for normal operation.

**No**

INSTALL a new secondary air injection pump relay. CLEAR the DTC and test the system for normal operation.

## PINPOINT TEST C : (N/A FEDERAL SPECIFICATION ONLY) CHECK THE SECONDARY AIR INJECTION MAP SENSOR CIRCUITS

| TEST CONDITIONS | DETAILS/RESULTS/ACTIONS |
|---|---|

**C1: CHECK THE SECONDARY AIR INJECTION MAP SENSOR SUPPLY CIRCUIT FOR SHORT CIRCUIT TO GROUND**

1 Key off.

2 Disconnect the secondary air injection MAP sensor electrical connector, FH312.

3 Measure the resistance between:

| Secondary air injection MAP sensor connector FH312, harness side | Battery |
|---|---|
| Pin 01 | Negative terminal |

Is the resistance less than 10,000 ohms?

**Yes**

REPAIR the short circuit. For additional information, refer to the wiring diagrams. CLEAR the DTC and test the system for normal operation.

**No**

GO to C2.

**C2: CHECK THE SECONDARY AIR INJECTION MAP SENSOR SUPPLY CIRCUIT FOR SHORT CIRCUIT TO POWER**

1 Measure the resistance between:

| Secondary air injection MAP sensor connector FH312, harness side | Battery |
|---|---|
| Pin 01 | Positive terminal |

Is the resistance less than 10,000 ohms?

**Yes**

REPAIR the short circuit. For additional information, refer to the wiring diagrams. CLEAR the DTC and test the system for normal operation.

**No**

GO to C3.

GETtheMANUALS.org

**C3: CHECK THE SECONDARY AIR INJECTION MAP SENSOR SIGNAL CIRCUIT FOR SHORT CIRCUIT TO GROUND**

| | |
|---|---|
| | 1 Measure the resistance between: |

| Secondary air injection MAP sensor connector FH312, harness side | Battery |
|---|---|
| Pin 02 | Negative terminal |

Is the resistance less than 10,000 ohms?

**Yes**

REPAIR the short circuit. For additional information, refer to the wiring diagrams. CLEAR the DTC and test the system for normal operation.

**No**

GO to C4.

**C4: CHECK THE SECONDARY AIR INJECTION MAP SENSOR SIGNAL CIRCUIT FOR SHORT CIRCUIT TO POWER**

1 Measure the resistance between:

| Secondary air injection MAP sensor connector FH312, harness side | Battery |
|---|---|
| Pin 02 | Positive terminal |

Is the resistance less than 10,000 ohms?

**Yes**

REPAIR the short circuit. For additional information, refer to the wiring diagrams. CLEAR the DTC and test the system for normal operation.

**No**

GO to C5.

**C5: CHECK THE SECONDARY AIR INJECTION MAP SENSOR SUPPLY CIRCUIT FOR HIGH RESISTANCE**

1 Disconnect the ECM electrical connector, FH300.

2 Measure the resistance between:

| Secondary air injection MAP sensor connector FH312, harness side | ECM connector FH300, harness side |
|---|---|
| Pin 01 | Pin 19 |

Is the resistance greater than 5 ohms?

**Yes**

REPAIR the high resistance circuit. For additional information, refer to the wiring diagrams. CLEAR the DTC and test the system for normal operation.

**No**

GO to C6.

**C6: CHECK THE SECONDARY AIR INJECTION MAP SENSOR SIGNAL CIRCUIT FOR HIGH RESISTANCE**

1 Measure the resistance between:

| Secondary air injection MAP sensor connector FH312, harness side | ECM connector FH300, harness side |
|---|---|
| Pin 02 | Pin 13 |

Is the resistance greater than 5 ohms?

**Yes**

REPAIR the high resistance circuit. For additional information, refer to the wiring diagrams. CLEAR the DTC and test the system for normal operation.

**No**

GO to C7.

**C7: CHECK THE SECONDARY AIR INJECTION MAP SENSOR GROUND CIRCUIT FOR HIGH RESISTANCE**

1 Measure the resistance between:

| Secondary air injection MAP sensor connector FH312, harness side | ECM connector FH300, harness side |
|---|---|
| Pin 03 | Pin 07 |

Is the resistance greater than 5 ohms?

**Yes**

REPAIR the high resistance circuit. For additional information, refer to the wiring diagrams. CLEAR the DTC and test the system for normal operation.

**No**

INSTALL a new secondary air injection MAP sensor. CLEAR the DTC and test the system for normal operation.

## PINPOINT TEST D : CHECK THE SECONDARY AIR INJECTION CONTROL VALVE CIRCUITS

| TEST CONDITIONS | DETAILS/RESULTS/ACTIONS |
|---|---|

**D1: CHECK THE SECONDARY AIR INJECTION CONTROL VALVE SUPPLY VOLTAGE**

1 Key off.

2 Disconnect the secondary air injection control valve electrical connector, PI302.

3 Key on, engine off.

4 Measure the voltage between:

| Secondary air injection control valve connector PI302, harness side | Battery |
|---|---|
| Pin 01 | Negative terminal |

Is the voltage less than 10 volts?

**Yes**

REPAIR the supply circuit between the secondary air injection control valve and battery. This circuit includes fuse 2 of the front power distribution. For additional information, refer to the wiring diagrams. CLEAR the DTC and test the system for normal operation.

**No**

GO to D2.

**D2: CHECK THE SECONDARY AIR INJECTION CONTROL VALVE CONTROL CIRCUIT FOR SHORT CIRCUIT TO GROUND**

1 Measure the resistance between:

| Secondary air injection control valve connector PI302, harness side | Battery |
|---|---|
| Pin 02 | Negative terminal |

Is the resistance less than 10,000 ohms?

**Yes**

REPAIR the short circuit. For additional information, refer to the wiring diagrams. CLEAR the DTC and test the system for normal operation.

**No**

GO to D3.

**D3: CHECK THE SECONDARY AIR INJECTION CONTROL VALVE CONTROL CIRCUIT FOR SHORT CIRCUIT TO POWER**

1 Measure the resistance between:

| Secondary air injection control valve connector PI302, harness side | Battery |
|---|---|
| Pin 02 | Positive terminal |

GETtheMANUALS.org

Is the resistance less than 10,000 ohms?

**Yes**

REPAIR the short circuit. For additional information, refer to the wiring diagrams. CLEAR the DTC and test the system for normal operation.

**No**

GO to D4.

**D4: CHECK THE SECONDARY AIR INJECTION CONTROL VALVE CONTROL CIRCUIT FOR HIGH RESISTANCE**

1. Disconnect the ECM electrical connector, FH300.
2. Measure the resistance between:

| Secondary air injection control valve connector PI302, harness side | ECM connector FH300, harness side |
|---|---|
| Pin 02 | Pin 55 |

Is the resistance greater than 5 ohms?

**Yes**

REPAIR the high resistance circuit. For additional information, refer to the wiring diagrams. CLEAR the DTC and test the system for normal operation.

**No**

INSTALL a new secondary air injection control valve.
REFER to: Secondary Air Injection (AIR) Control Valve - 3.0L (303-08A Engine Emission Control - V8 4.2L Petrol/V8 S/C 4.2L Petrol/2.5L NA V6 - AJV6/3.0L NA V6 - AJ27, Removal and Installation) /
Secondary Air Injection (AIR) Control Valve - 4.2L, Vehicles Without: Supercharger (303-08A Engine Emission Control - V8 4.2L Petrol/V8 S/C 4.2L Petrol/2.5L NA V6 - AJV6/3.0L NA V6 - AJ27, Removal and Installation) /
Secondary Air Injection (AIR) Control Valve - 4.2L, Vehicles With: Supercharger (303-08A Engine Emission Control - V8 4.2L Petrol/V8 S/C 4.2L Petrol/2.5L NA V6 - AJV6/3.0L NA V6 - AJ27, Removal and Installation).
CLEAR the DTC and test the system for normal operation.

GETtheMANUALS.org

# Engine Emission Control - V8 4.2L Petrol / V8 S/C 4.2L Petrol / 2.5L NA V6 - AJV6 / 3.0L NA V6 - AJ27 - Exhaust Gas Recirculation (EGR) Valve

Removal and Installation

## Removal

Left-hand drive vehicles with Supercharger

1. Remove the cabin air filter.
   For additional information, refer to: Cabin Air Filter (412-01 Air Distribution and Filtering, Removal and Installation).
2. Remove the cabin air filter housing retaining nut.

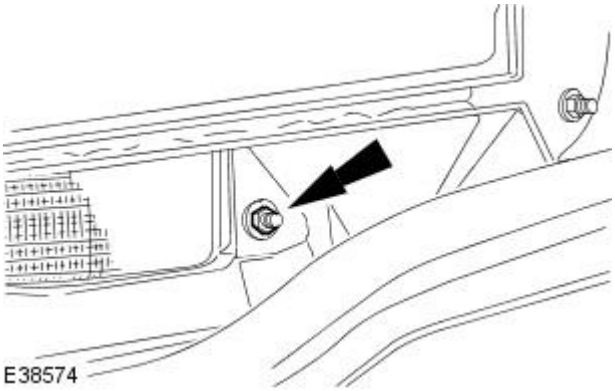


3. Remove the cabin air filter housing.

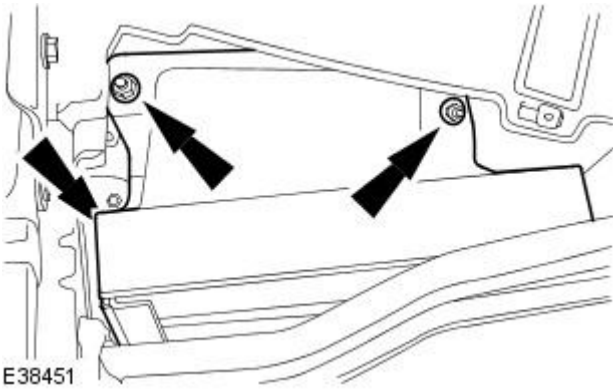


4. Remove the engine compartment panel.

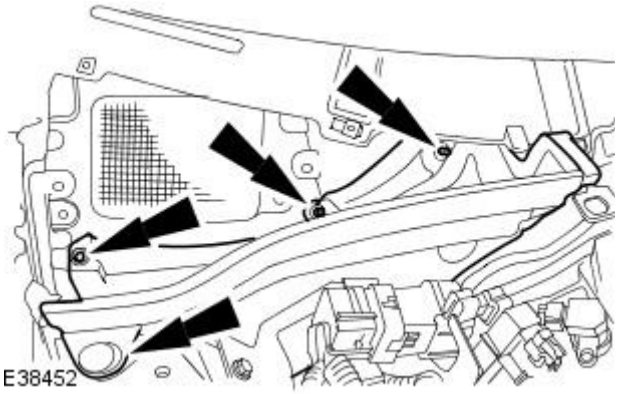


Vehicles with supercharger

5. Remove the throttle body. For additional information, refer to: (303-04 Fuel Charging and Controls - 3.5L/4.2L)

   Throttle Body - Vehicles With: Supercharger, VIN Range: G00442->G45703 (Removal and Installation),
   Throttle Body - Vehicles With: Supercharger, VIN Range: G45704->G99999 (Removal and Installation).

GETtheMANUALS.org

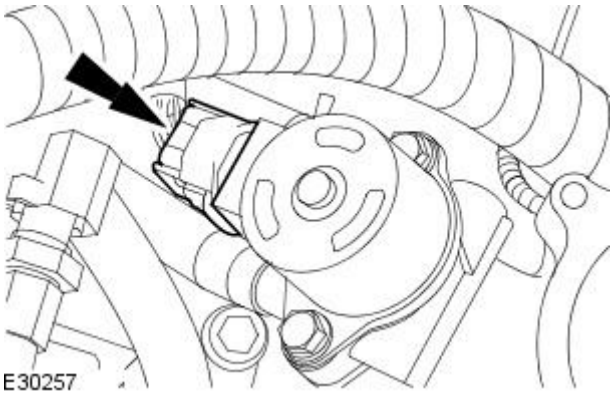


**6.** Disconnect the exhaust gas recirculation (EGR) valve electrical connector.

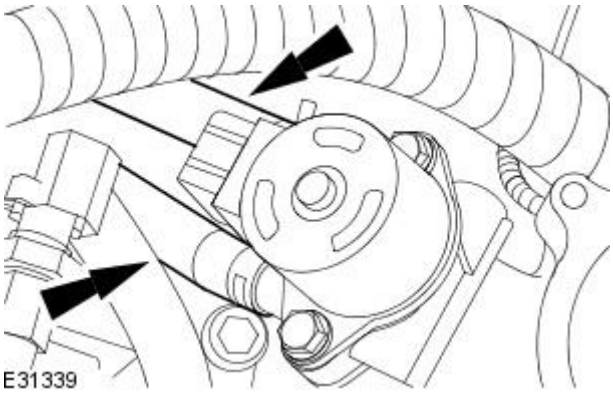


**7.** NOTE: Cap the exposed ports.

Disconnect the coolant hoses.

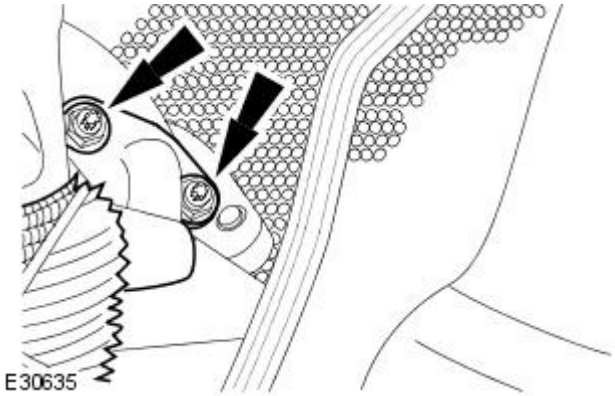


**8.** Remove the exhaust manifold to EGR valve tube retaining nuts.

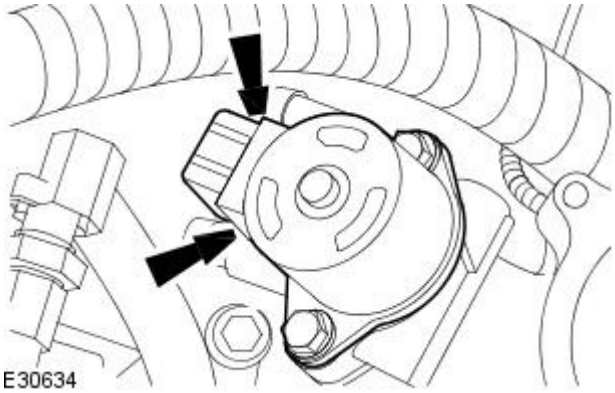


**9.** Remove the EGR valve and the exhaust manifold to EGR valve tube.

- Remove the retaining bolts.
- Remove and discard the exhaust manifold to EGR valve tube gasket.
- Remove and discard the EGR valve to air intake elbow gasket.

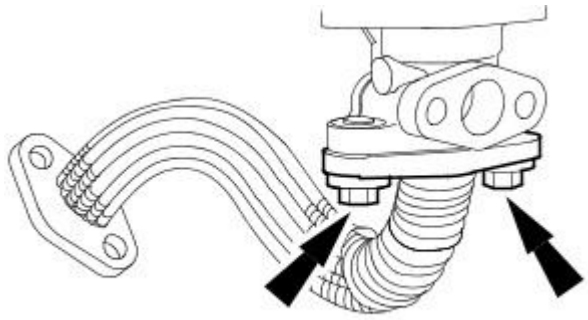


**10.** Remove the EGR valve.

- Remove and discard the EGR valve to exhaust manifold to EGR valve tube gasket.

GETtheMANUALS.org

Vehicles without supercharger

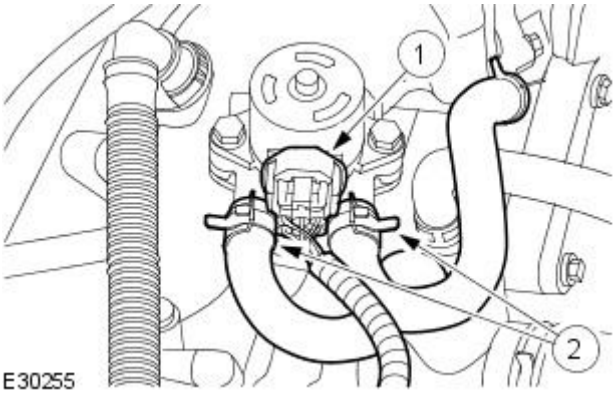


**11.** NOTE: Cap the exposed ports.

Disconnect the EGR valve coolant hoses.

1. Disconnect the EGR valve electrical connector.
2. Disconnect the EGR valve coolant hoses.

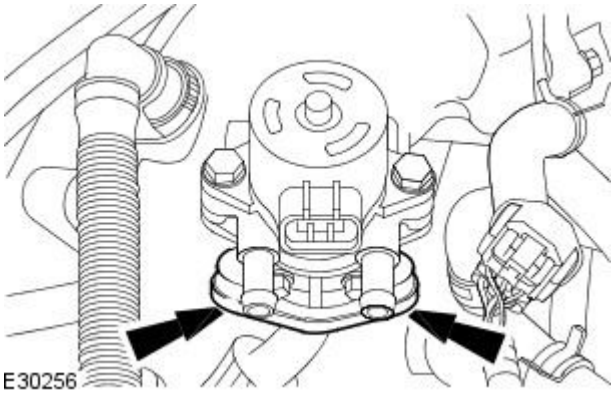


**12.** Remove the retaining bolts.

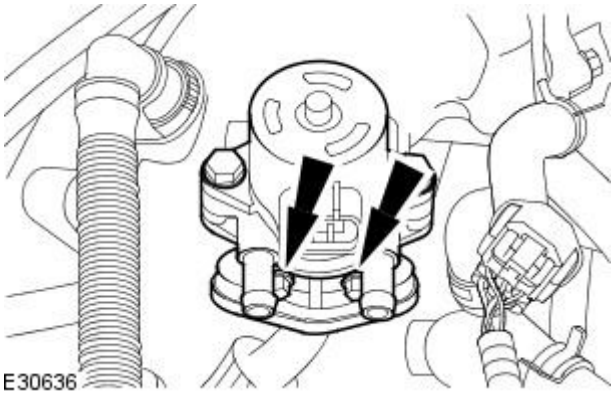


**13.** Remove the EGR valve.

- Remove and discard the EGR valve to exhaust manifold to EGR valve tube gasket.
- Remove and discard the EGR valve to intake manifold gasket.

## Installation

Vehicles with supercharger

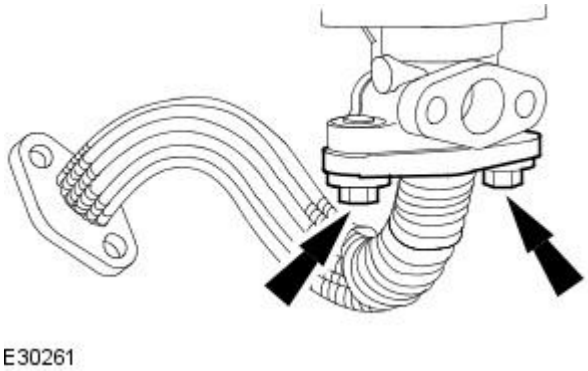


**1.** Install the EGR valve.

- Install a new EGR valve to exhaust manifold to EGR valve tube gasket.
- Tighten to 21 Nm.

GETtheMANUALS.org

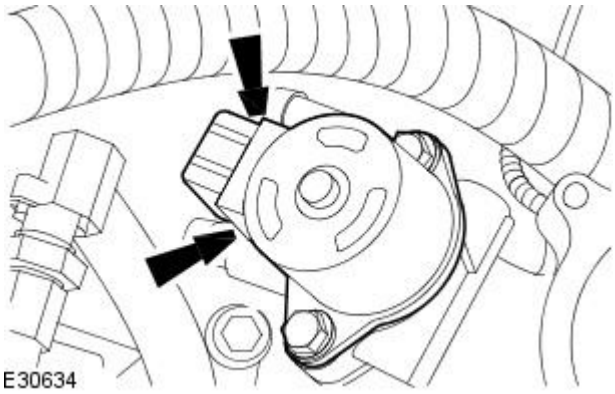


**2.** Install the EGR valve and the exhaust manifold to EGR valve tube.

- Install a new exhaust manifold to EGR valve tube gasket.
- Install a new EGR valve to air intake elbow gasket.
- Tighten to 10 Nm.

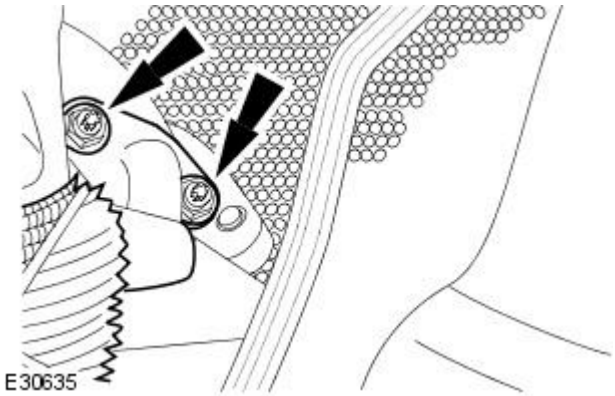


**3.** Tighten to 21 Nm.

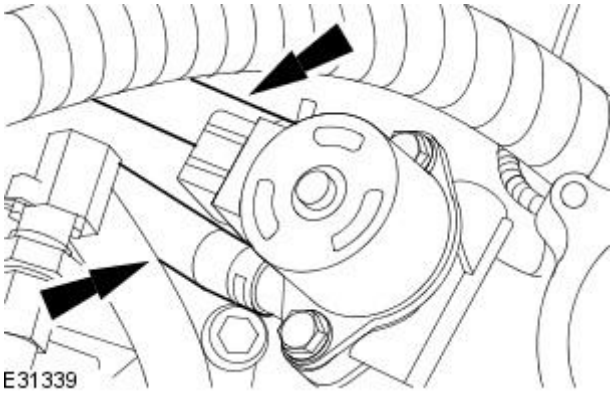


**4.** NOTE: Un-cap the exposed ports.

Connect the coolant hoses.

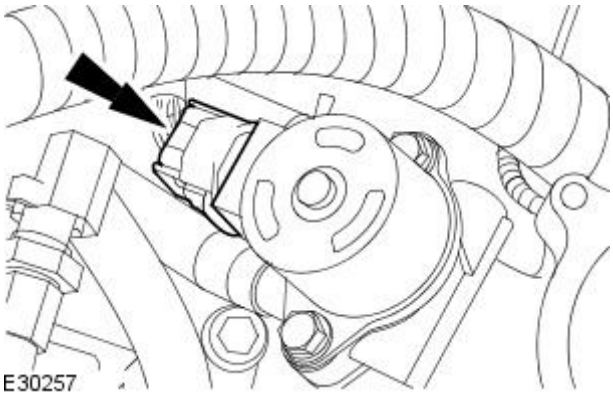


**5.** Connect the EGR valve electrical connector.

**6.** Install the throttle body. For additional information, refer to: (303-04 Fuel Charging and Controls - 3.5L/4.2L)

Throttle Body - Vehicles With: Supercharger, VIN Range: G00442->G45703 (Removal and Installation),
Throttle Body - Vehicles With: Supercharger, VIN Range: G45704->G99999 (Removal and Installation).

Vehicles without supercharger

GETtheMANUALS.org

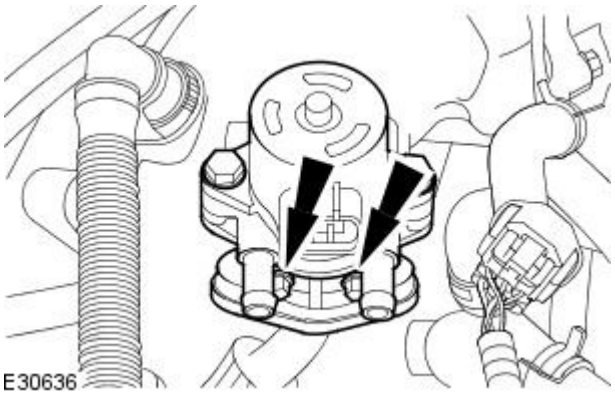


**7.** Install the EGR valve.

- Install a new EGR valve to exhaust manifold to EGR valve tube gasket.
- Install a new EGR valve to intake manifold gasket.
- Tighten to 10 Nm.

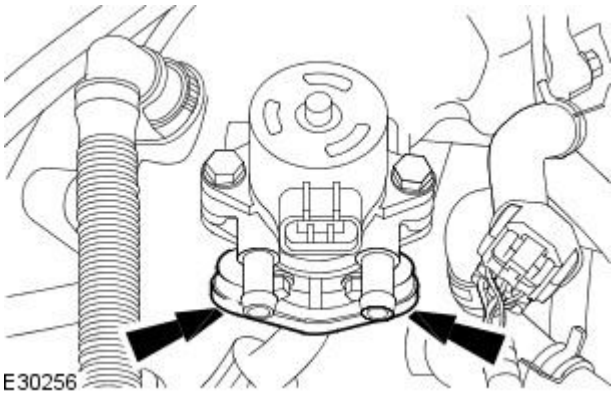


**8.** Tighten to 21 Nm.

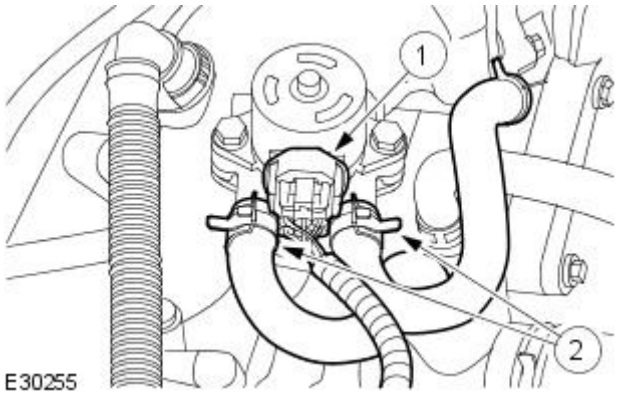


**9.** NOTE: Un-cap the exposed ports.

Connect the EGR valve electrical connector.

1. Connect the EGR valve coolant hoses.
2. Connect the EGR valve electrical connector.

Left-hand drive vehicles with Supercharger

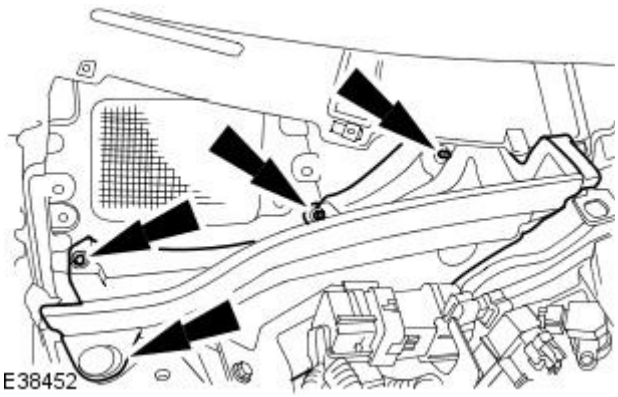


**10.** Install the engine compartment panel.

GETtheMANUALS.org

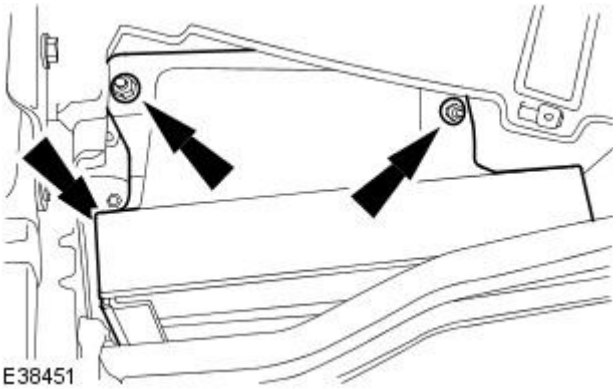


**11.** Install the cabin air filter housing.

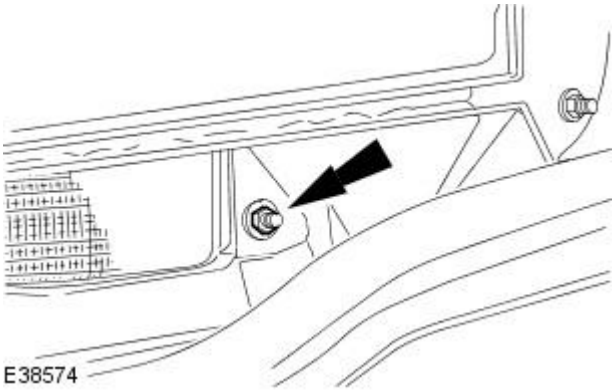


**12.** Install the cabin air filter housing retaining nut.

**13.** Install the cabin air filter.
For additional information, refer to: Cabin Air Filter (412-01 Air Distribution and Filtering, Removal and Installation).

All vehicles

**14.** Check and top up the coolant expansion tank.

**15.** NOTE: For NAS vehicles only.

If required, carry out a long drive cycle.
For additional information, refer to: Powertrain Control Module (PCM) Long Drive Cycle Self-Test (303-14A Electronic Engine Controls - 2.5L NA V6 - AJV6/3.0L NA V6 - AJ27, General Procedures).

GETtheMANUALS.org

# Engine Emission Control - V8 4.2L Petrol / V8 S/C 4.2L Petrol / 2.5L NA V6 - AJV6 / 3.0L NA V6 - AJ27 - Exhaust Manifold to Exhaust Gas Recirculation (EGR) Valve Tube

Removal and Installation

## Removal

Vehicles with supercharger

1. Remove the exhaust gas recirculation (EGR) valve.
   For additional information, refer to: Exhaust Manifold to Exhaust Gas Recirculation (EGR) Valve Tube (303-08A Engine Emission Control - V8 4.2L Petrol/V8 S/C 4.2L Petrol/2.5L NA V6 - AJV6/3.0L NA V6 - AJ27, Removal and Installation).

Vehicles without supercharger

2. Remove the intake manifold. For additional information, refer to: (303-01B)

   Intake Manifold - VIN Range: G00442->G45170 (In-vehicle Repair),
   Intake Manifold - VIN Range: G45171->G99999 (In-vehicle Repair).

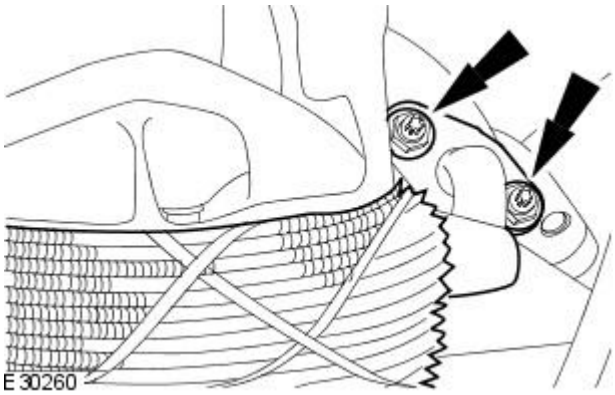


3. Remove the exhaust manifold to exhaust gas recirculation (EGR) valve tube.
   - Remove and discard the gasket.

## Installation

Vehicles with supercharger

1. Install the EGR valve.
   For additional information, refer to: Exhaust Gas Recirculation (EGR) Valve (303-08A Engine Emission Control - V8 4.2L Petrol/V8 S/C 4.2L Petrol/2.5L NA V6 - AJV6/3.0L NA V6 - AJ27, Removal and Installation).

Vehicles without supercharger

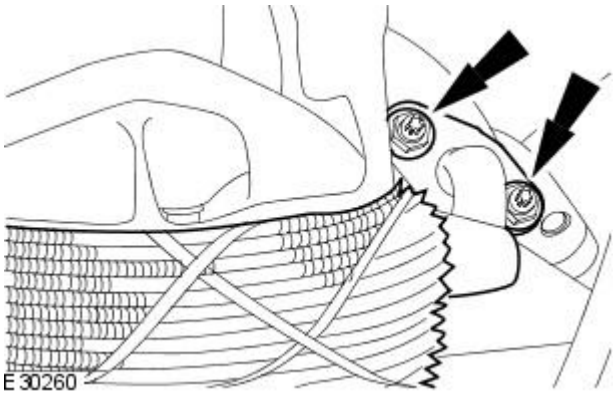


2. Install the exhaust manifold to exhaust gas recirculation (EGR) valve tube.
   - Install a new gasket.
   - Tighten to 21 Nm.

3. Install the intake manifold. For additional information, refer to: (303-01B)

   Intake Manifold - VIN Range: G00442->G45170 (In-vehicle Repair),
   Intake Manifold - VIN Range: G45171->G99999 (In-vehicle Repair).

GETtheMANUALS.org

# Engine Emission Control - V8 4.2L Petrol/V8 S/C 4.2L Petrol/2.5L NA V6 - AJV6/3.0L NA V6 - AJ27 - Secondary Air Injection (AIR) Control Valve3.0L

Removal and Installation

## Removal

**1.** WARNING: Do not work on or under a vehicle supported only by a jack. Always support the vehicle on safety stands.

Raise and support the vehicle.

**2.** Drain the cooling system. For additional information, refer to: Cooling System Draining, Filling and Bleeding (303-03A Engine Cooling - V8 4.2L Petrol/V8 S/C 4.2L Petrol/2.5L NA V6 - AJV6/3.0L NA V6 - AJ27, General Procedures).

**3.** Remove the air cleaner.For additional information, refer to: Air Cleaner (303-12A Intake Air Distribution and Filtering - 2.5L NA V6 - AJV6/3.0L NA V6 - AJ27, Removal and Installation).

**4.** Release the coolant pipes.

- Release the 2 clips.

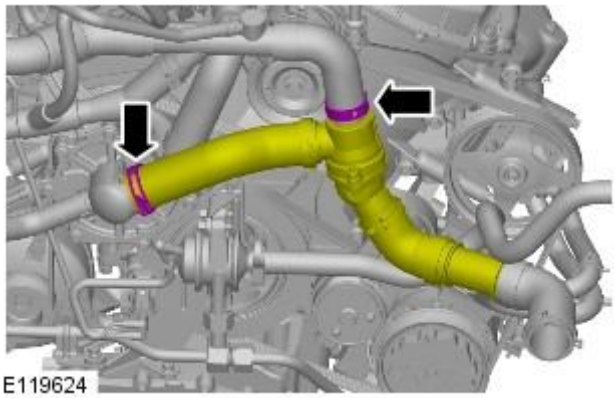

E119624

**5.** Disconnect the secondary air injection (AIR) control valve to exhaust manifold right-hand tube.

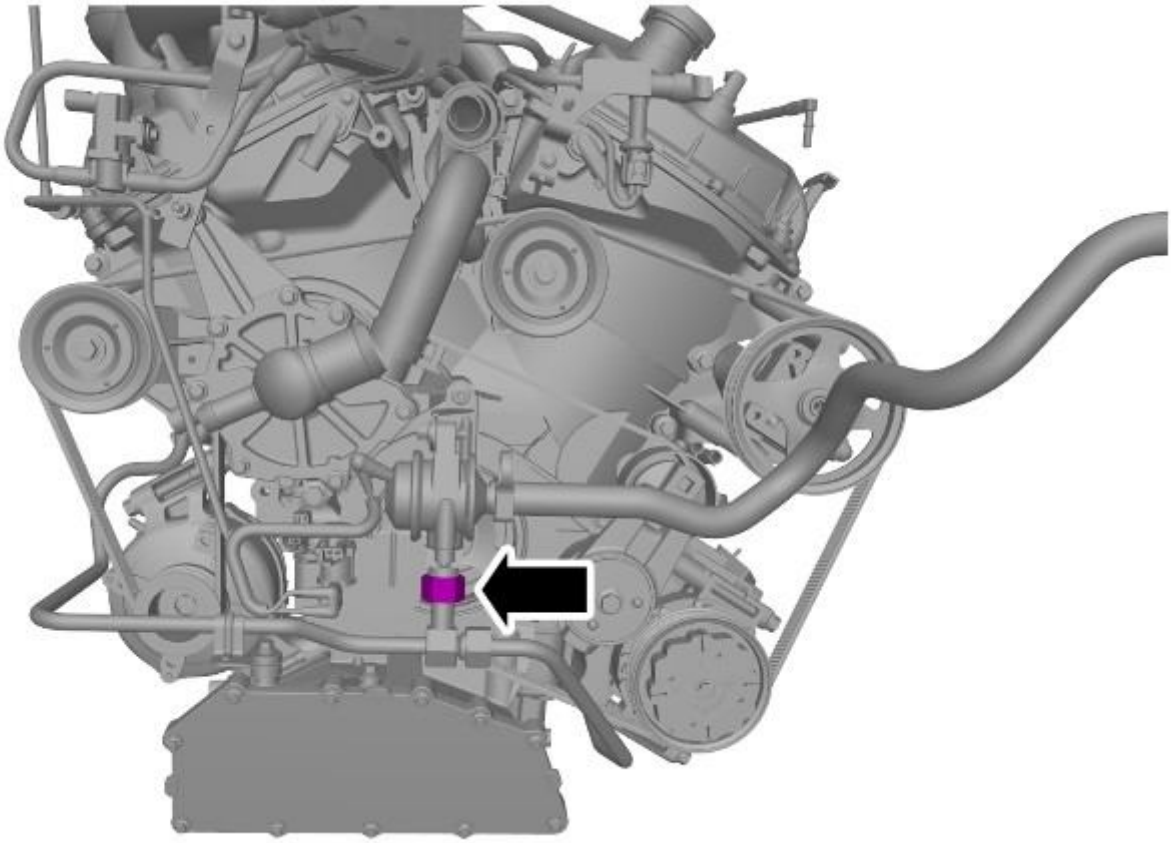

E120448

GETtheMANUALS.org

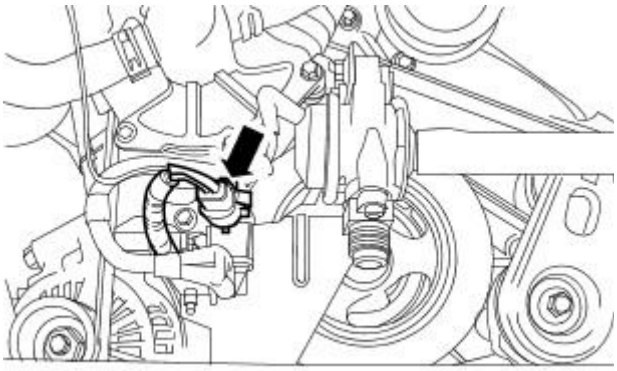

E63556

**6.** Disconnect the AIR switching valve electrical connector.

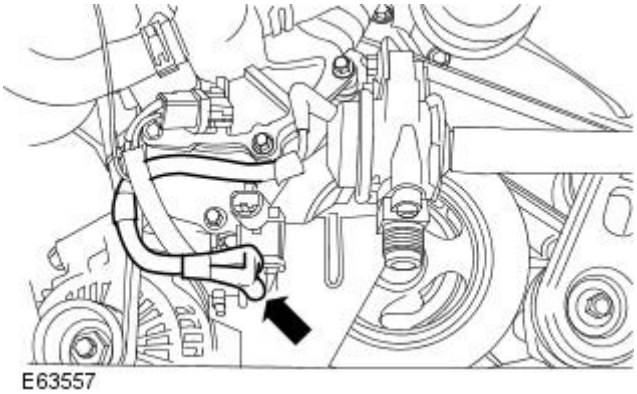

E63557

**7.** Disconnect the AIR switching valve vacuum hoses.

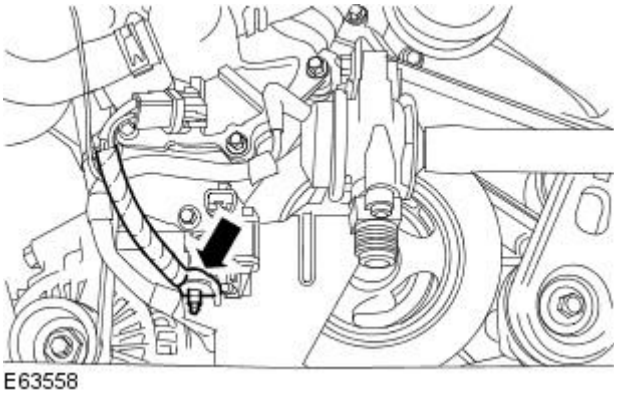

E63558

**8.** Detach the AIR wiring harness.

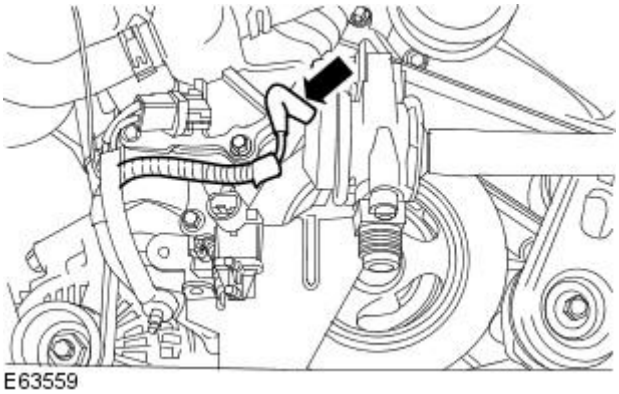

E63559

**9.** Disconnect the AIR control valve vacuum hose.

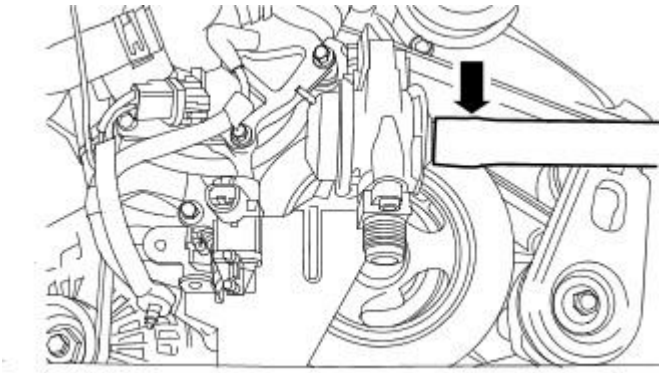

E63560

**10.** NOTE: Note the position of the timing marks on the AIR control valve and the AIR supply hose.

Disconnect the AIR supply hose.

GETtheMANUALS.org

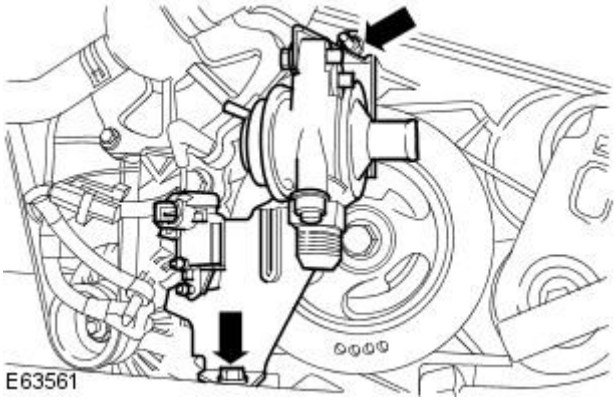


**11.** Remove the AIR control valve and bracket assembly.

## Installation

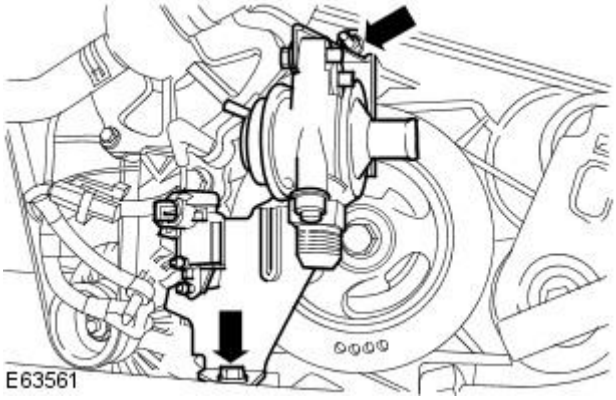


**1.** To install, reverse the removal procedure.

- Tighten to 8 Nm.

**2.** Tighten to 35 Nm.

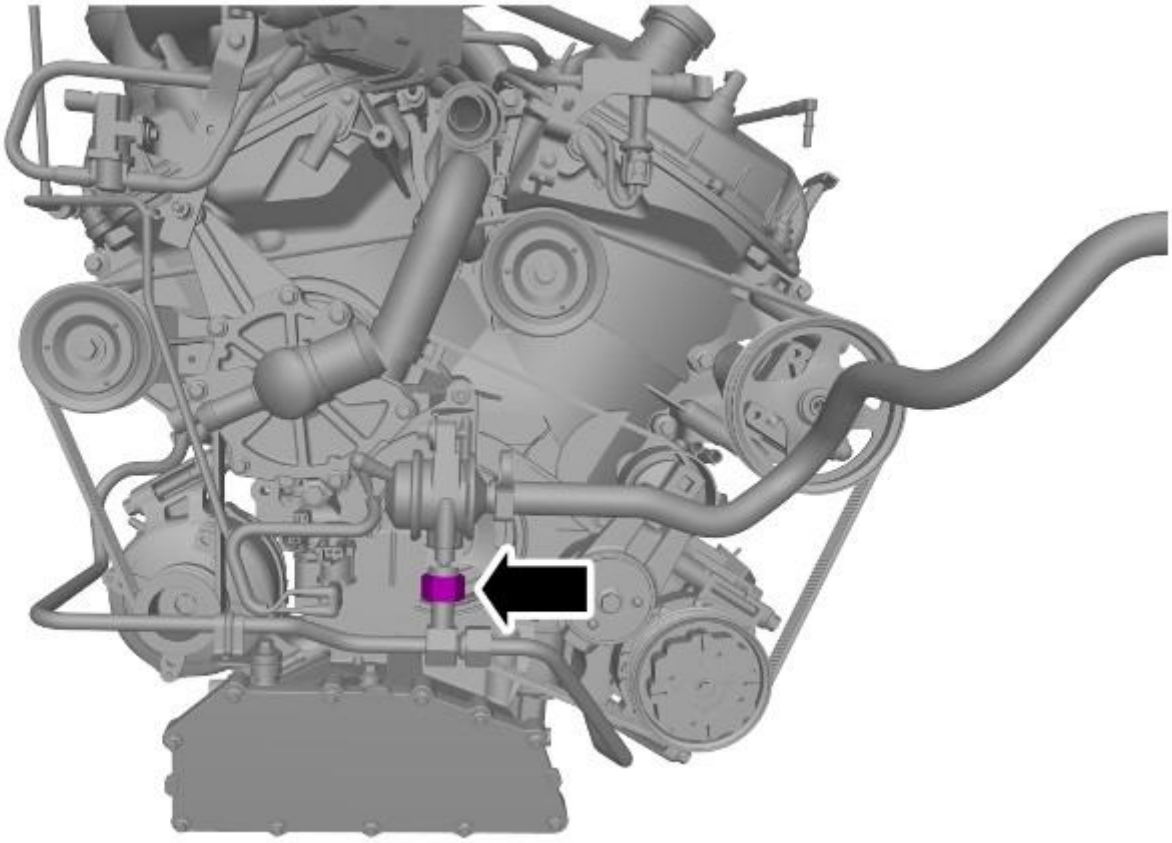


**3.** NOTE: For NAS vehicles only.

If required, carry out a short drive cycle.
For additional information, refer to: Powertrain Control Module (PCM) Short Drive Cycle Self-Test (303-14A Electronic Engine Controls - 2.5L NA V6 - AJV6/3.0L NA V6 - AJ27, General Procedures).

GETtheMANUALS.org

# Engine Emission Control - V8 4.2L Petrol/V8 S/C 4.2L Petrol/2.5L NA V6 - AJV6/3.0L NA V6 - AJ27 - Secondary Air Injection (AIR) Control Valve4.2L, Vehicles Without: Supercharger

Removal and Installation

## Removal

1. Disconnect the battery ground cable.
   For additional information, refer to: Battery Disconnect and Connect (414-01 Battery, Mounting and Cables, General Procedures).
2. Remove the air cleaner.
   For additional information, refer to: Air Cleaner (303-12B Intake Air Distribution and Filtering - V8 4.2L Petrol/V8 S/C 4.2L Petrol, Removal and Installation).
3. Disconnect the secondary air injection (AIR) control valve vacuum hose.

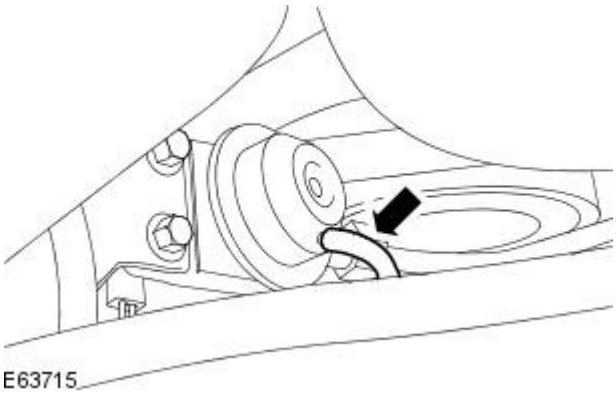


4. Disconnect the AIR control valve to exhaust manifold tube.

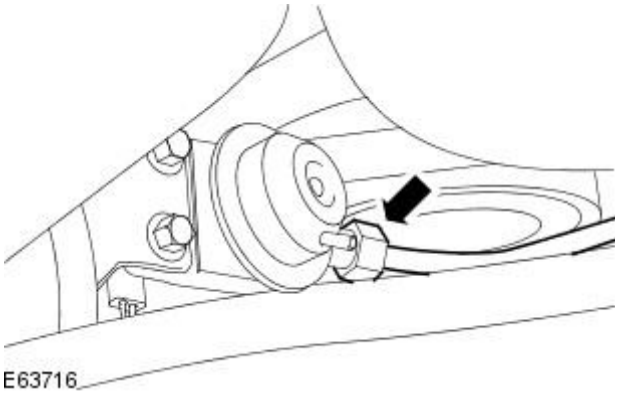


5. Reposition the AIR control valve downwards.
   - Remove the AIR control valve retaining bolts.

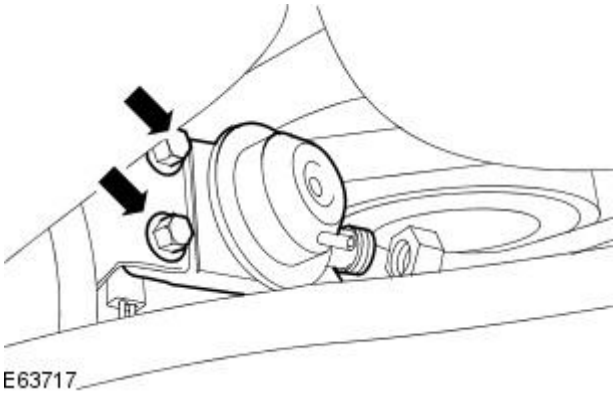


6. Remove the air deflector.
   For additional information, refer to: Air Deflector (501-02 Front End Body Panels, Removal and Installation).

GETtheMANUALS.org

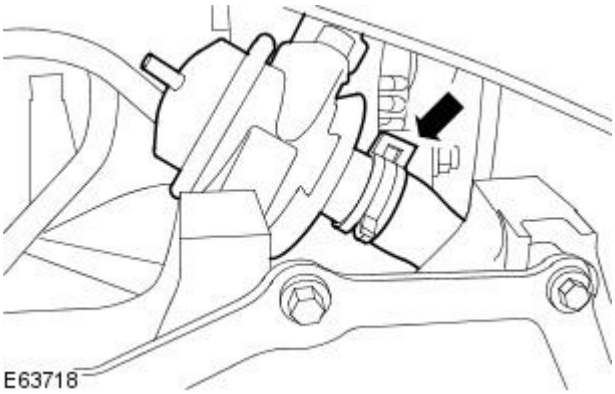


**7.** Remove the AIR control valve.

- Disconnect the AIR control valve supply hose.

## Installation

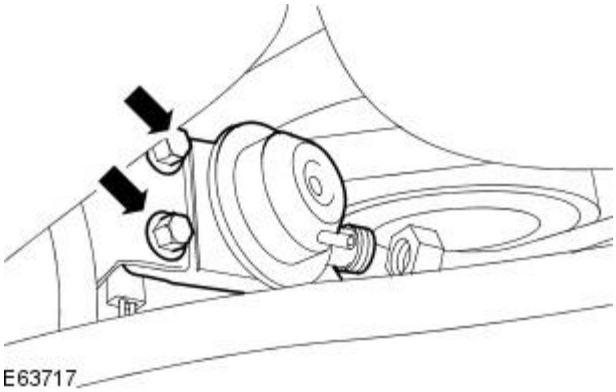


**1.** To install, reverse the removal procedure.

1. Tighten to 25 Nm.

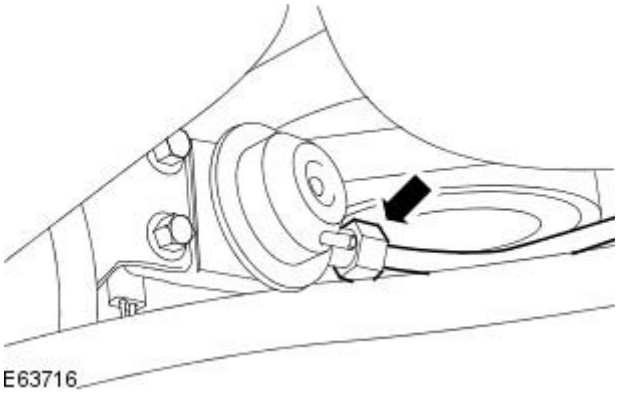


**2.** Tighten to 35 Nm.

**3.** NOTE: For NAS vehicles only.

If required, carry out a short drive cycle.
For additional information, refer to: Powertrain Control Module (PCM) Short Drive Cycle Self-Test (303-14A Electronic Engine Controls - 2.5L NA V6 - AJV6/3.0L NA V6 - AJ27, General Procedures).

GETtheMANUALS.org

# Engine Emission Control - V8 4.2L Petrol / V8 S/C 4.2L Petrol / 2.5L NA V6 - AJV6 / 3.0L NA V6 - AJ27 - Secondary Air Injection (AIR) Control Valve4.2L, Vehicles With: Supercharger

Removal and Installation

## Removal

1. Disconnect the battery ground cable.
   For additional information, refer to: Battery Disconnect and Connect (414-01 Battery, Mounting and Cables, General Procedures).
2. Remove the radiator grille opening panel.
   For additional information, refer to: Radiator Grille Opening Panel (501-02 Front End Body Panels, Removal and Installation).
3. Remove the air cleaner outlet pipe.
   For additional information, refer to: Air Cleaner Outlet Pipe (303-12B Intake Air Distribution and Filtering - V8 4.2L Petrol/V8 S/C 4.2L Petrol, Removal and Installation).
4. Remove the air cleaner intake duct.

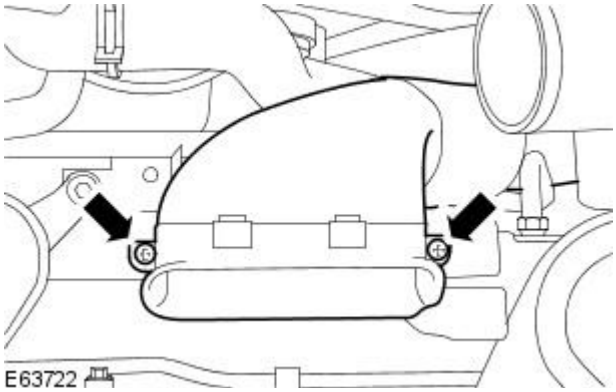


5. Disconnect the secondary air injection (AIR) control valve to exhaust manifold tube.

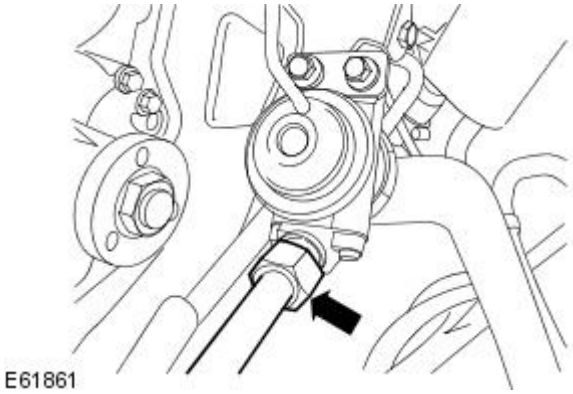


6. Disconnect the AIR control valve vacuum hose.

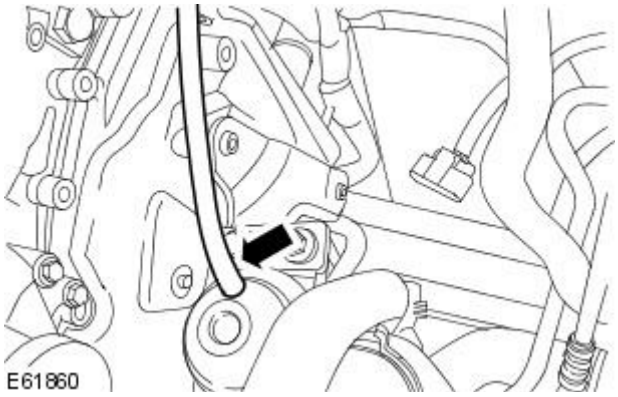


GETtheMANUALS.org

**7.** Release the hose from the cooling fan motor and shroud.

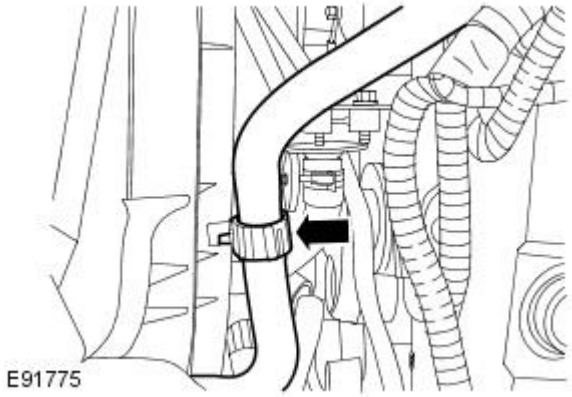


**8.** Disconnect the AIR control valve air supply hose.

1. Release the hose from the cooling fan motor and shroud.
2. Disconnect the AIR control valve air supply hose.

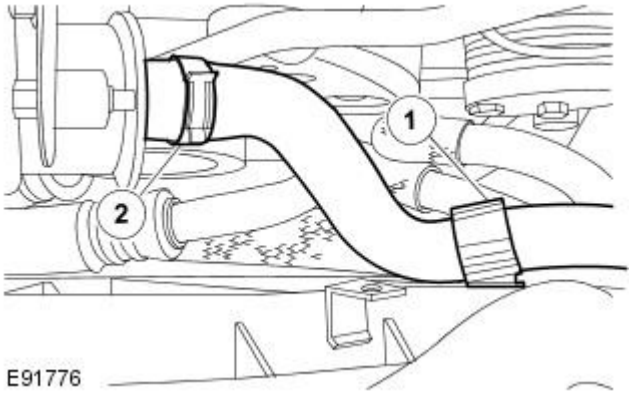


**9.** Remove the AIR control valve.

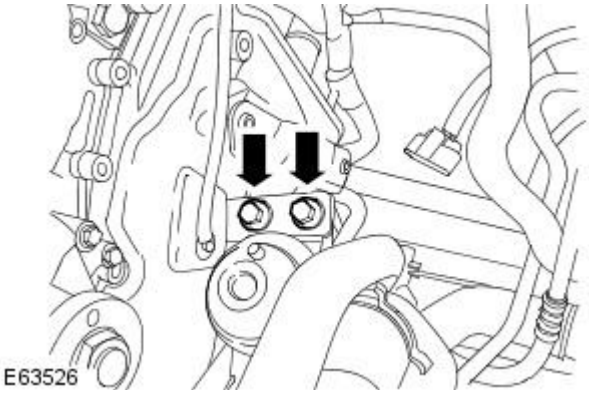


## Installation

**1.** Install the AIR control valve.

- Tighten to 25 Nm.

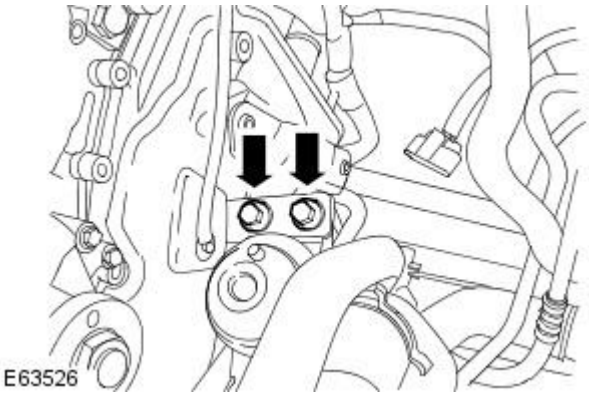


GETtheMANUALS.org

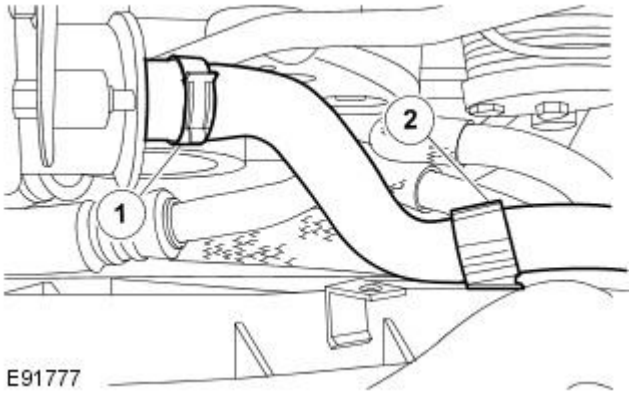


**2.** Connect the AIR control valve air supply hose.

1. Connect the AIR control valve air supply hose.
2. Secure the hose to the cooling fan motor and shroud.

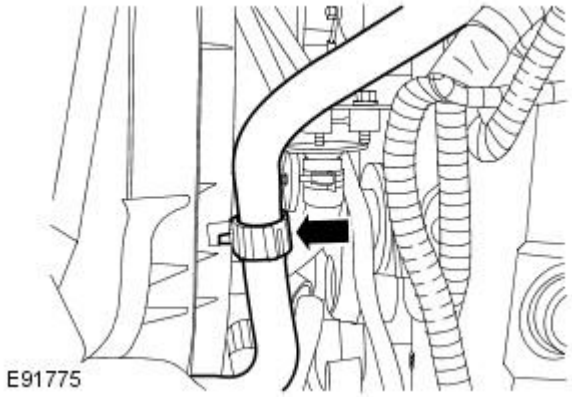


**3.** Secure the hose to the cooling fan motor and shroud.

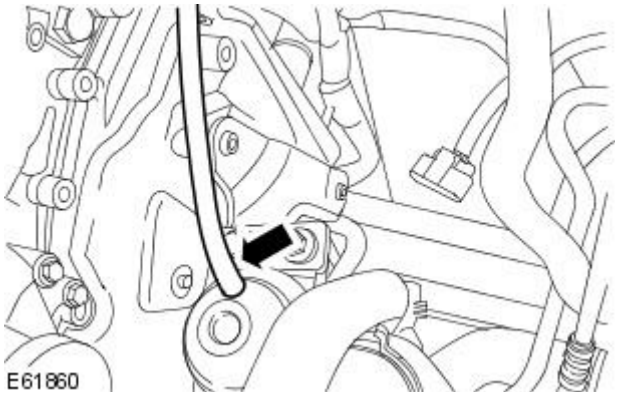


**4.** Connect the AIR control valve vacuum hose.

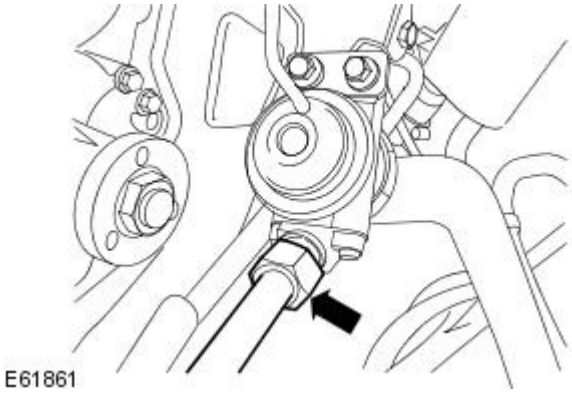


**5.** Connect the AIR control valve to exhaust manifold tube.

- Tighten to 35 Nm.

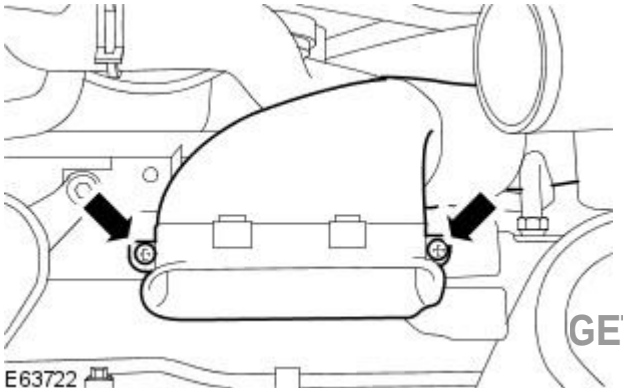


**6.** Install the air cleaner intake duct.

GETtheMANUALS.org

7. Install the air cleaner outlet pipe.
For additional information, refer to: Air Cleaner Outlet Pipe (303-12B Intake Air Distribution and Filtering - V8 4.2L Petrol/V8 S/C 4.2L Petrol, Removal and Installation).

8. Install the radiator grille opening panel.
For additional information, refer to: Radiator Grille Opening Panel (501-02 Front End Body Panels, Removal and Installation).

9. Connect the battery ground cable.
For additional information, refer to: Battery Connect (414-01 Battery, Mounting and Cables, General Procedures).

10. NOTE: For NAS vehicles only.

If required, carry out a short drive cycle.
For additional information, refer to: Powertrain Control Module (PCM) Short Drive Cycle Self-Test (303-14A Electronic Engine Controls - 2.5L NA V6 - AJV6/3.0L NA V6 - AJ27, General Procedures).

GETtheMANUALS.org

# Engine Emission Control - V8 4.2L Petrol / V8 S/C 4.2L Petrol / 2.5L NA V6 - AJV6 / 3.0L NA V6 - AJ27 - Secondary Air Injection (AIR) Control Valve to Exhaust Manifold Tube LH3.0L

Removal and Installation

## Removal

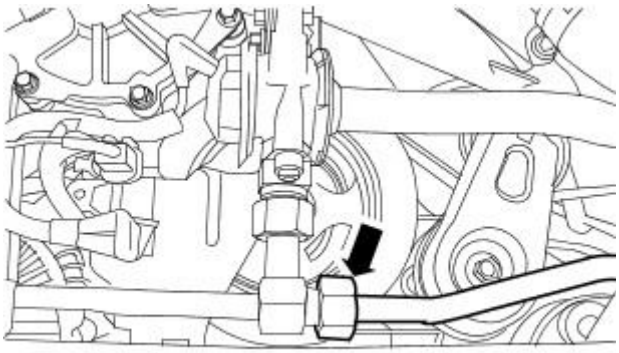

E63553

**1.** NOTE: Note the position of the timing mark on the secondary air injection (AIR) control valve to exhaust manifold left-hand tube. The timing mark indicates the correct end of the AIR control valve to exhaust manifold left-hand tube that should be connected to the AIR control valve to exhaust manifold right-hand tube.

Disconnect the secondary air injection (AIR) control valve to exhaust manifold left-hand tube.

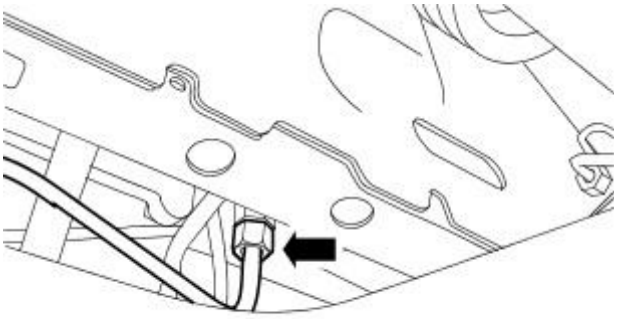

E63171

**2.** Remove the air deflector.
For additional information, refer to: Air Deflector (501-02 Front End Body Panels, Removal and Installation).

**3.** Remove the AIR control valve to exhaust manifold left-hand tube from the left-hand exhaust manifold.

## Installation

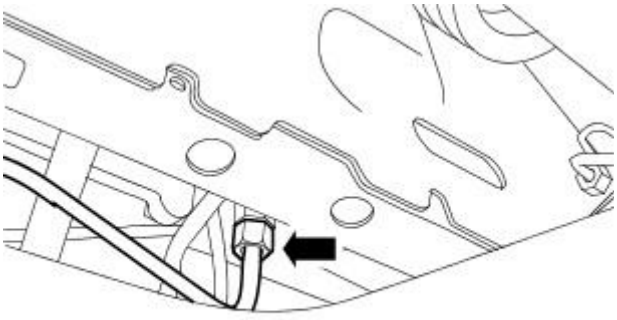

E63171

**1.** To install, reverse the removal procedure.

- Tighten to 35 Nm.

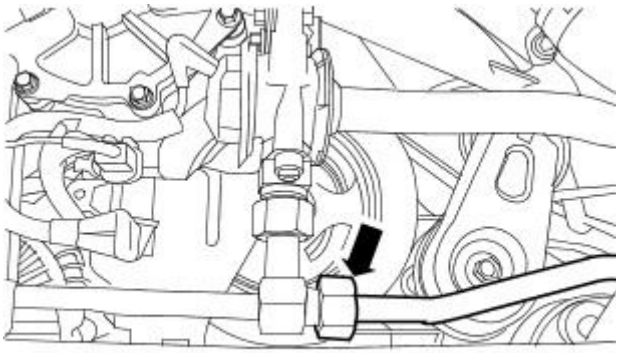

E63553

**2.** NOTE: Make sure that the timing mark on the AIR control valve to exhaust manifold left-hand tube is correctly aligned.

Tighten to 35 Nm.

GETtheMANUALS.org

# Engine Emission Control - V8 4.2L Petrol / V8 S/C 4.2L Petrol / 2.5L NA V6 - AJV6 / 3.0L NA V6 - AJ27 - Secondary Air Injection (AIR) Control Valve to Exhaust Manifold Tube RH3.0L

Removal and Installation

## Removal

1. Disconnect the battery ground cable.
   For additional information, refer to: Battery Disconnect and Connect (414-01 Battery, Mounting and Cables, General Procedures).
2. Disconnect the secondary air injection (AIR) control valve to exhaust manifold right-hand tube from the right-hand exhaust manifold.

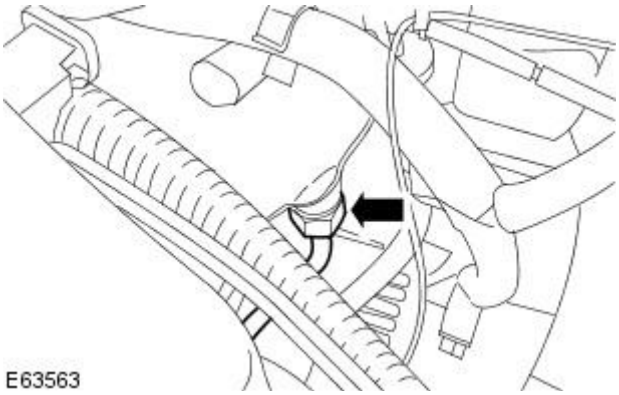

E63563

3. Disconnect the AIR control valve to exhaust manifold left-hand tube.

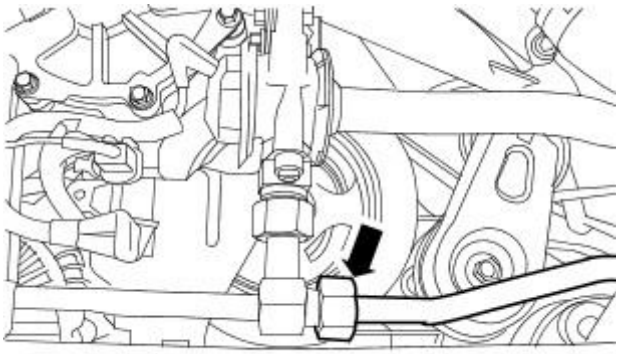

E63553

4. Disconnect the AIR control valve to exhaust manifold right-hand tube.

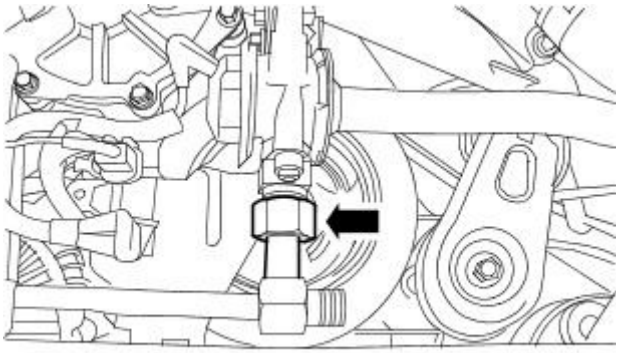

E63554

5. Remove the air deflector.
   For additional information, refer to: Air Deflector (501-02 Front End Body Panels, Removal and Installation).
6. Remove the AIR control valve to exhaust manifold right-hand tube.

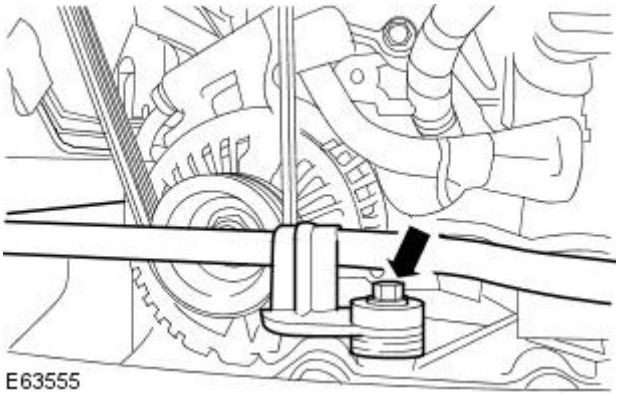

E63555

GETtheMANUALS.org

## Installation

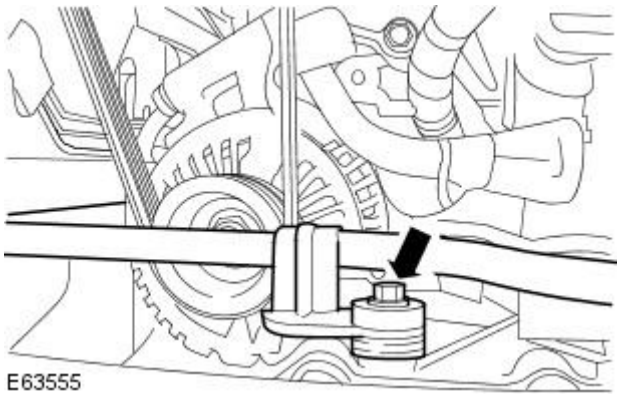

E63555

1. To install, reverse the removal procedure.
   - Tighten to 8 Nm.

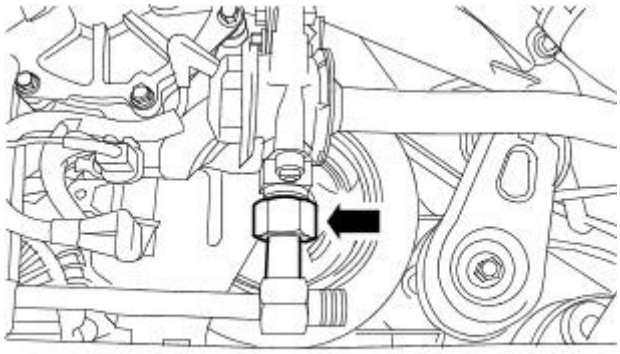

E63554

2. Tighten to 35 Nm.

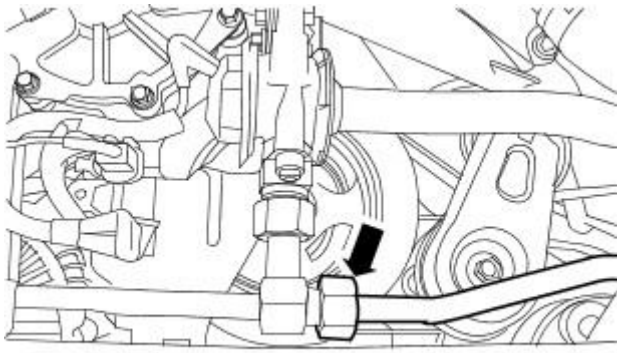

E63553

3. Tighten to 35 Nm.

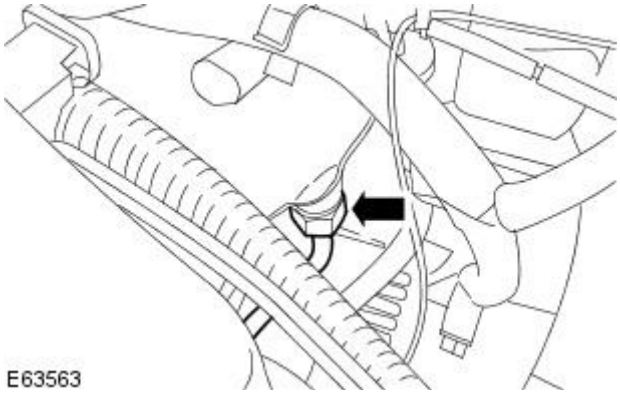

E63563

4. Tighten to 35 Nm.

GETtheMANUALS.org

# Engine Emission Control - V8 4.2L Petrol/V8 S/C 4.2L Petrol/2.5L NA V6 - AJV6/3.0L NA V6 - AJ27 - Secondary Air Injection (AIR) Control Valve to Exhaust Manifold Tube4.2L, Vehicles Without: Supercharger

Removal and Installation

## Removal

Right-hand drive vehicles

1. Center the steering wheel.
   - Lock in position, remove the ignition key.

All vehicles

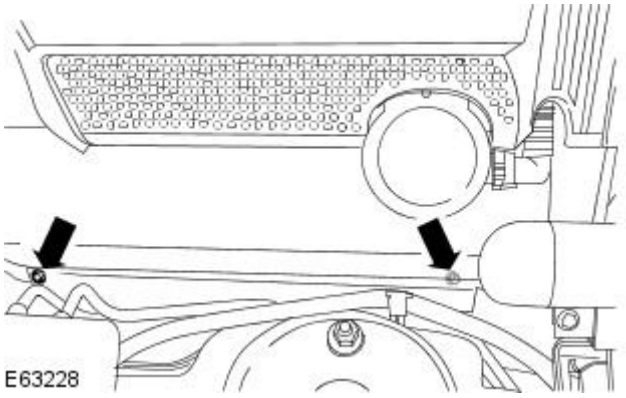


2. Remove the right-hand exhaust manifold heat shield upper retaining bolts.

3. Remove the cooling fan motor and shroud.
   For additional information, refer to: Cooling Fan Motor and Shroud (303-03A Engine Cooling - V8 4.2L Petrol/V8 S/C 4.2L Petrol/2.5L NA V6 - AJV6/3.0L NA V6 - AJ27, Removal and Installation).
4. Remove the air deflector.
   For additional information, refer to: Air Deflector (501-02 Front End Body Panels, Removal and Installation).
5. Disconnect the secondary air injection (AIR) control valve to exhaust manifold tube.

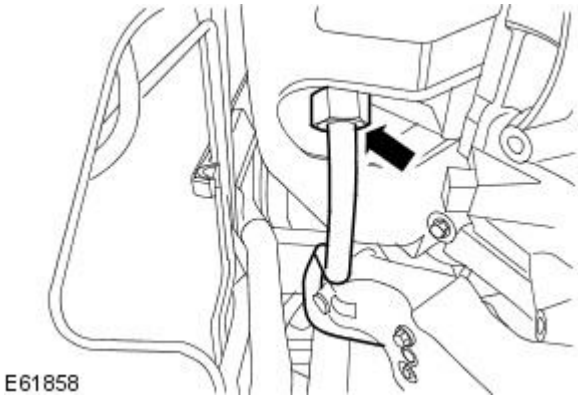


Right-hand drive vehicles

6. Remove the steering gear coupling upper pinch bolt

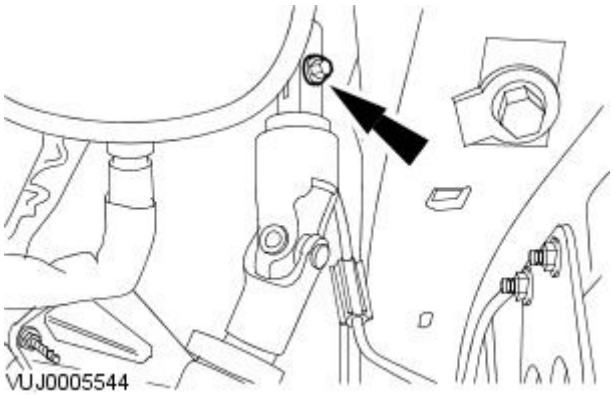


GETtheMANUALS.org

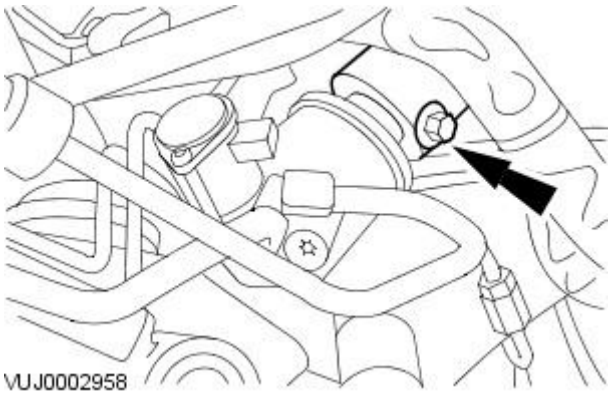


**7.** Remove the steering gear coupling.

- Remove the steering gear coupling lower pinch bolt.

All vehicles

**8.** Remove the right-hand heated oxygen sensor (HO2S).
For additional information, refer to: Heated Oxygen Sensor (HO2S) (303-14B Electronic Engine Controls - V8 4.2L Petrol/V8 S/C 4.2L Petrol, Removal and Installation).

**9.** Remove the right-hand exhaust manifold heat shield.

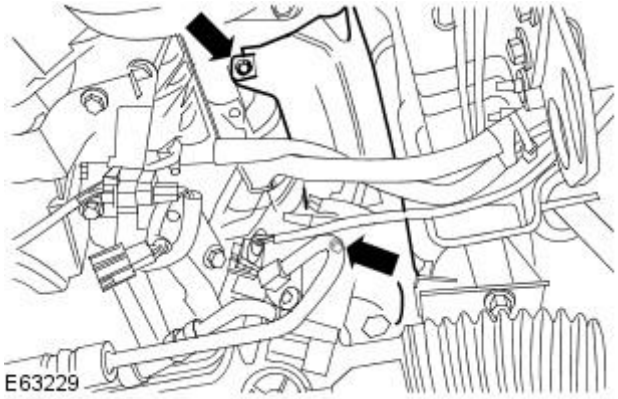


**10.** Disconnect the AIR control valve to exhaust manifold tube.

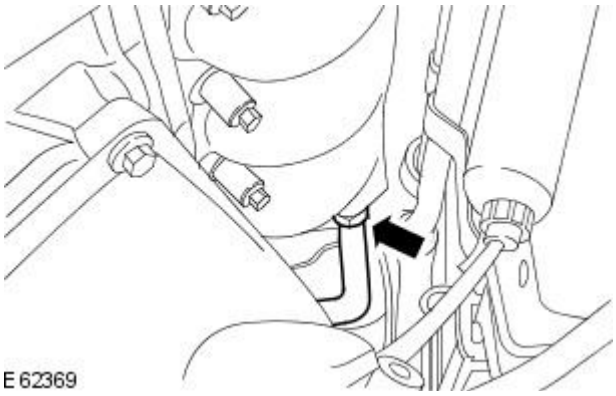


**11.** Lower the vehicle.

**12.** Disconnect the coolant hose.

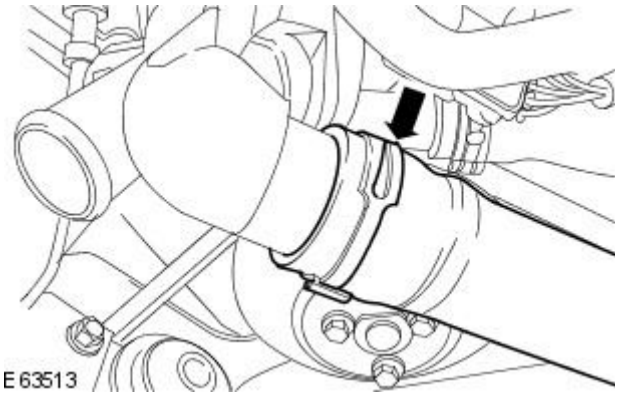


GETtheMANUALS.org

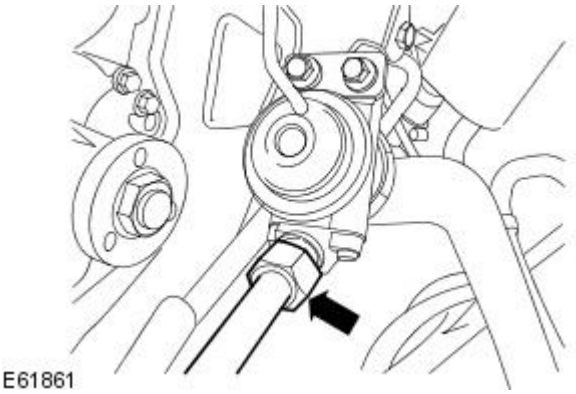


**13.** NOTE: Vehicles with supercharger shown, vehicles without supercharger similar.

Disconnect the AIR control valve to exhaust manifold tube.

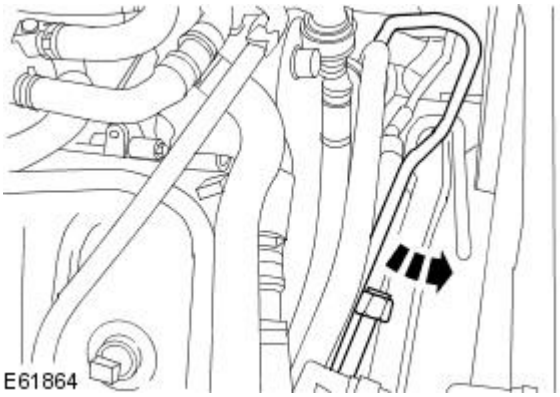


**14.** NOTE: Vehicles with supercharger shown, vehicles without supercharger similar.

Remove the AIR control valve to exhaust manifold tube.

## Installation

All vehicles

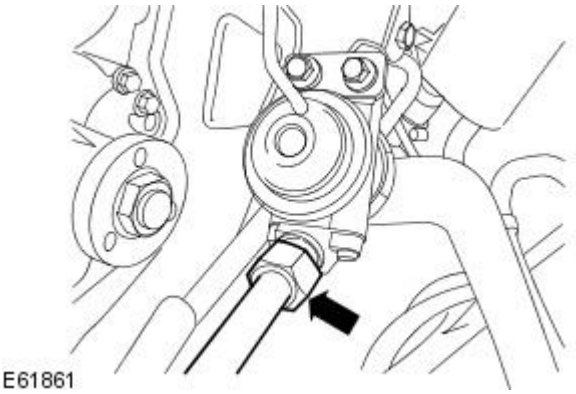


**1.** To install, reverse the removal procedure.

- Tighten to 35 Nm.

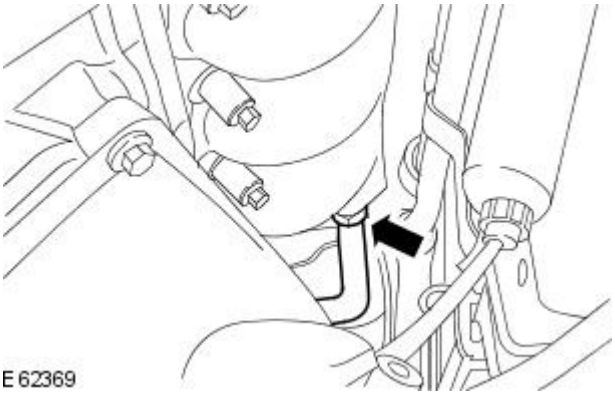


**2.** Tighten to 35 Nm.

GETtheMANUALS.org

**3.** Tighten to 3 Nm.

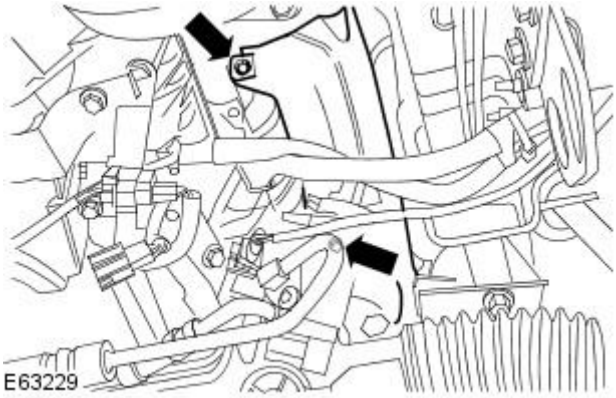


Right-hand drive vehicles

**4.** Tighten to 35 Nm.

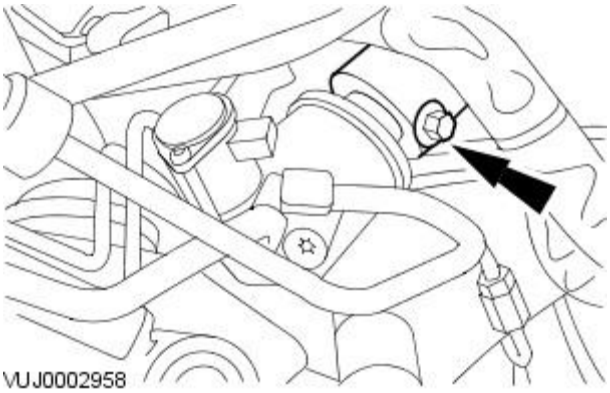


**5.** Tighten to 35 Nm.

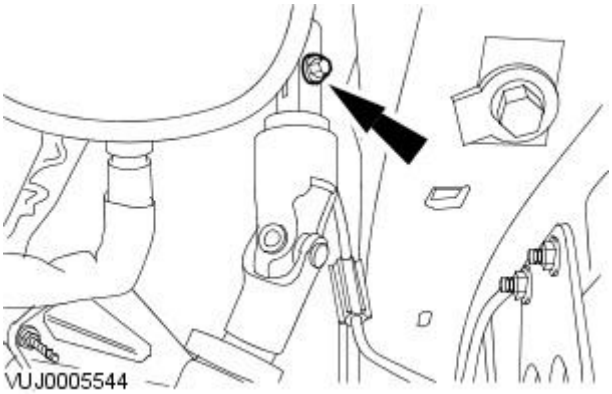


All vehicles

**6.** Tighten to 35 Nm.

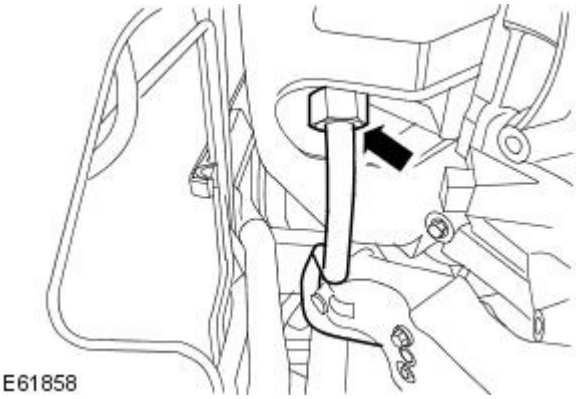


GETtheMANUALS.org

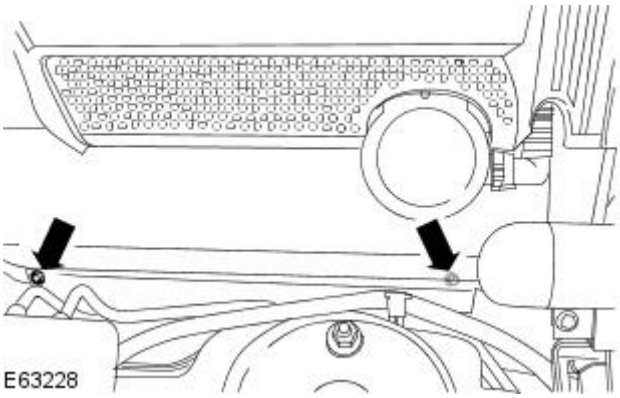


**7.** Tighten to 3 Nm.

GETtheMANUALS.org

# Engine Emission Control - V8 4.2L Petrol / V8 S/C 4.2L Petrol / 2.5L NA V6 - AJV6 / 3.0L NA V6 - AJ27 - Secondary Air Injection (AIR) Control Valve to Exhaust Manifold Tube4.2L, Vehicles With: Supercharger

Removal and Installation

## Removal

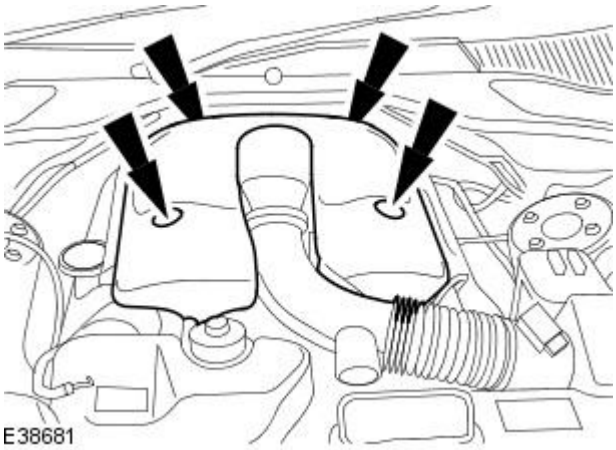


1. Disconnect the battery ground cable.
   For additional information, refer to: Battery Disconnect and Connect (414-01 Battery, Mounting and Cables, General Procedures).
2. Remove the engine cover.

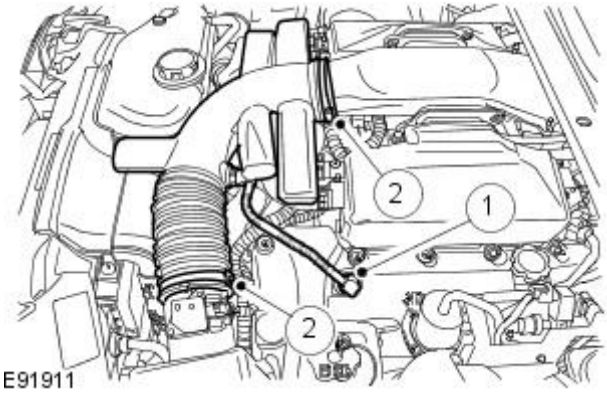


3. Remove the radiator grille opening panel.
   For additional information, refer to: Radiator Grille Opening Panel (501-02 Front End Body Panels, Removal and Installation).
4. Remove the air cleaner outlet pipe.
   1. Disconnect the positive crankcase ventilation (PCV) hose.
   2. Remove the air cleaner outlet pipe.

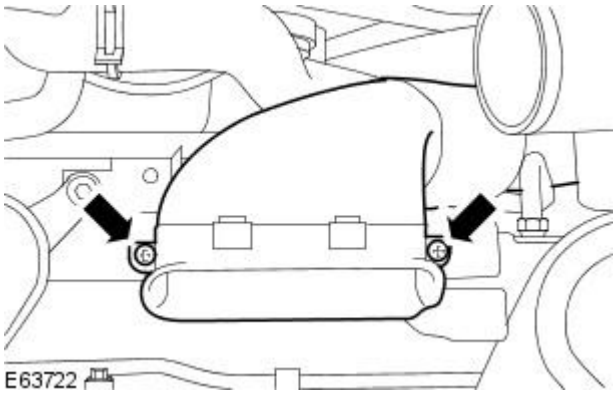


5. Remove the air cleaner intake duct.

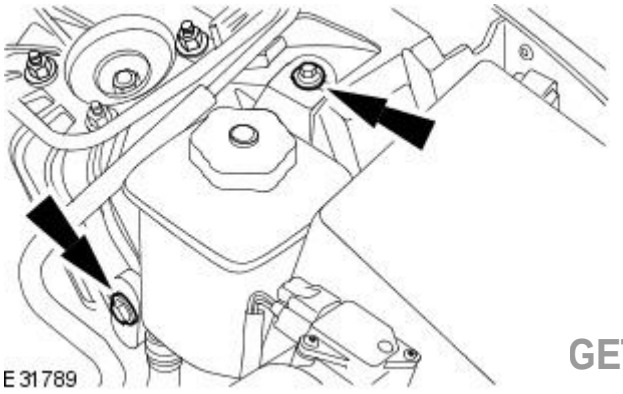


6. CAUTION: If power steering fluid comes into contact with the paintwork, the affected area must be immediately washed down with cold water.

   Detach the power steering fluid reservoir.

GETtheMANUALS.org

7. Remove the air deflector.
For additional information, refer to: Air Deflector (501-02 Front End Body Panels, Removal and Installation).

8. Remove the radiator splash shield.
For additional information, refer to: Radiator Splash Shield (501-02 Front End Body Panels, Removal and Installation).

9. Drain the cooling system.
For additional information, refer to: Cooling System Draining, Filling and Bleeding (303-03C Engine Cooling - 2.7L V6 - TdV6, General Procedures).

10. Disconnect the secondary air injection (AIR) control valve to exhaust manifold tube from the left-hand exhaust manifold.

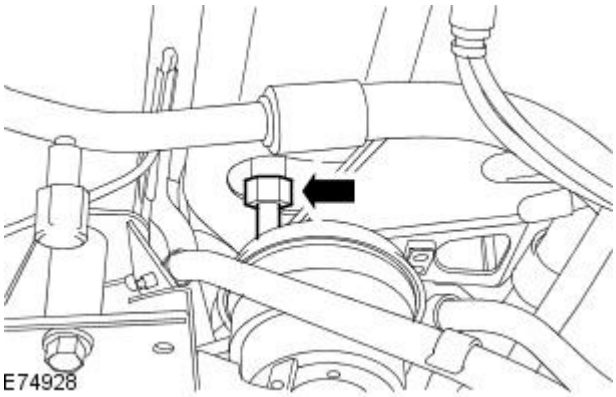


11. Remove the right-hand exhaust manifold heat shield.

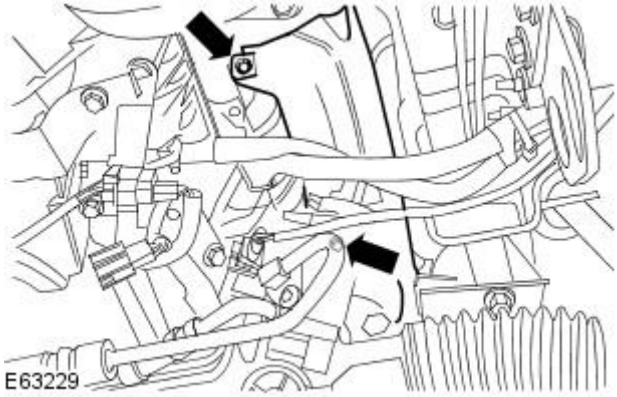


12. Lower the ramp.

13. Remove the right-hand exhaust manifold heat shield upper retaining bolts.

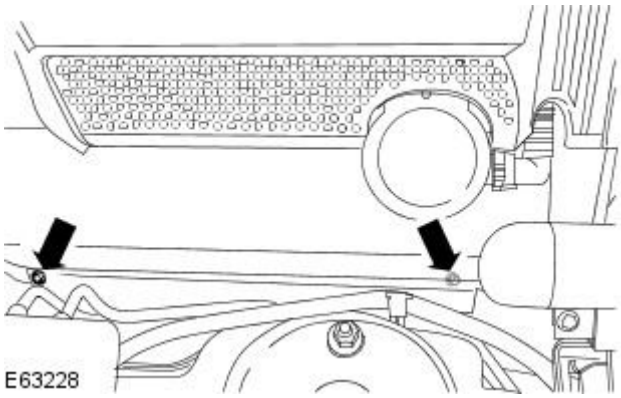


14. Remove the coolant expansion tank.
For additional information, refer to: Coolant Expansion Tank (303-03C Engine Cooling - 2.7L V6 - TdV6, Removal and Installation).

15. Disconnect the AIR control valve to exhaust manifold tube from the right-hand exhaust manifold.

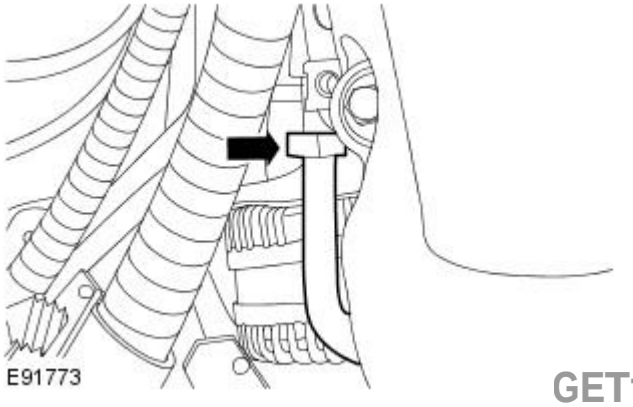


GETtheMANUALS.org

**16.** NOTE: Install suitable blanking plugs to the open orifices.

Disconnect the coolant hose.

1. Release the coolant hose from the cooling fan motor and shroud.
2. Disconnect the coolant hose.

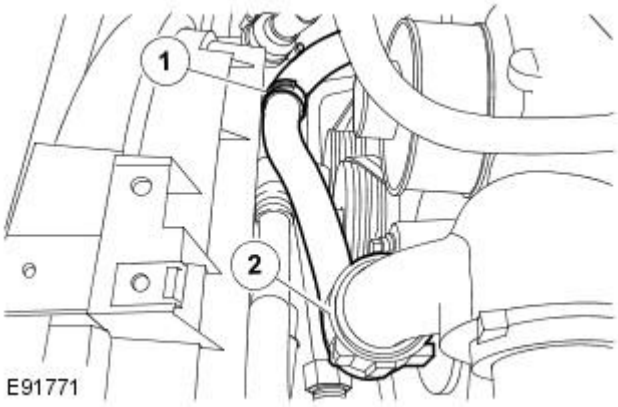


**17.** Disconnect the AIR control valve to exhaust manifold tube.

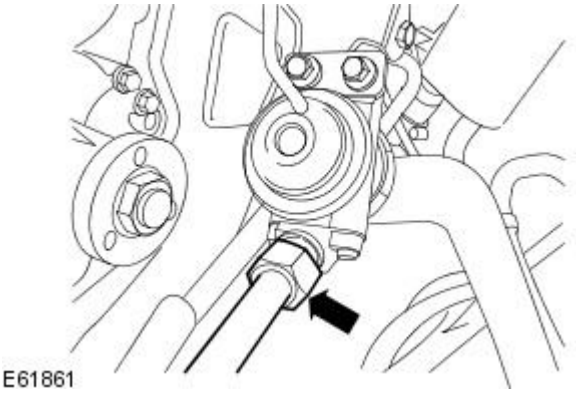


**18.** Disconnect the AIR control valve vacuum hose.

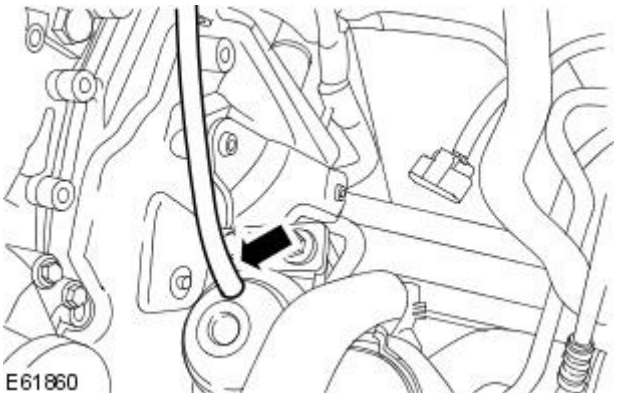


**19.** Release the hose from the cooling fan motor and shroud.

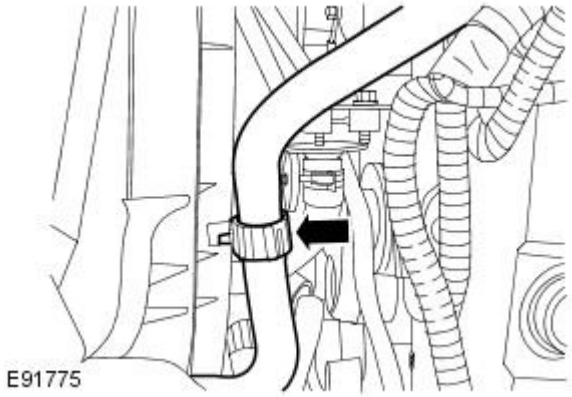


GETtheMANUALS.org

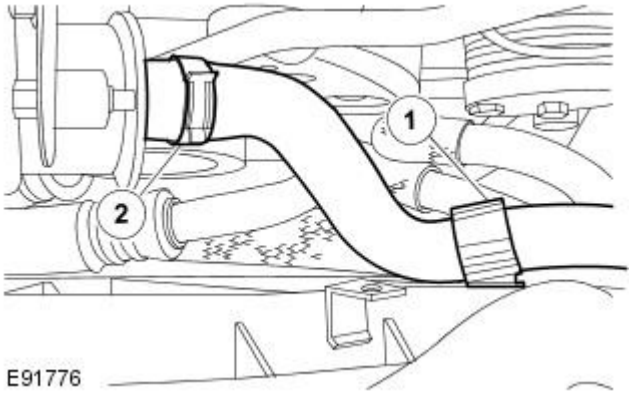


**20.** Disconnect the AIR control valve air supply hose.

1. Release the hose from the cooling fan motor and shroud.
2. Disconnect the AIR control valve air supply hose.

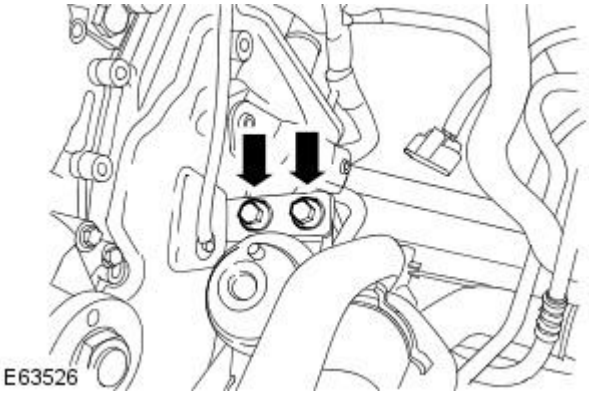


**21.** Remove the AIR control valve.

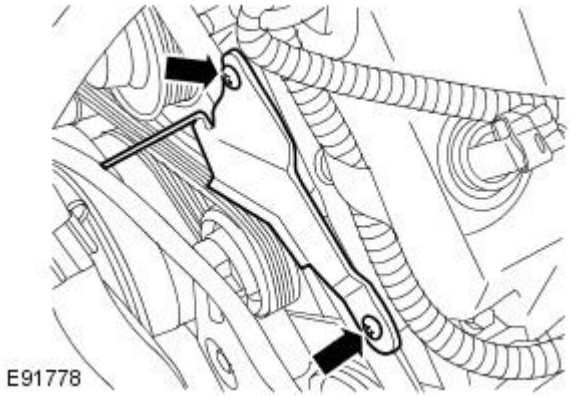


**22.** Remove the AIR control valve retaining bracket.

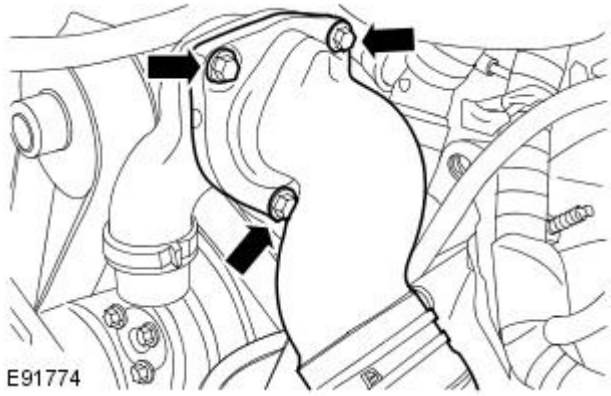


**23.** NOTE: Remove and discard the O-ring seal.

- NOTE: Install suitable blanking plugs to the open orifices.

Release the thermostat housing.

GETtheMANUALS.org

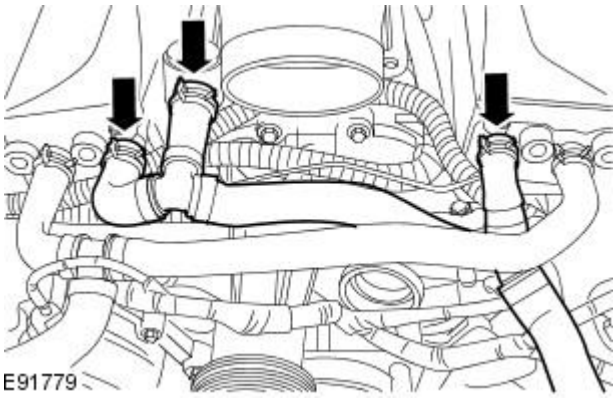


**24.** NOTE: Install suitable blanking plugs to the open orifices.

Disconnect the coolant hoses.

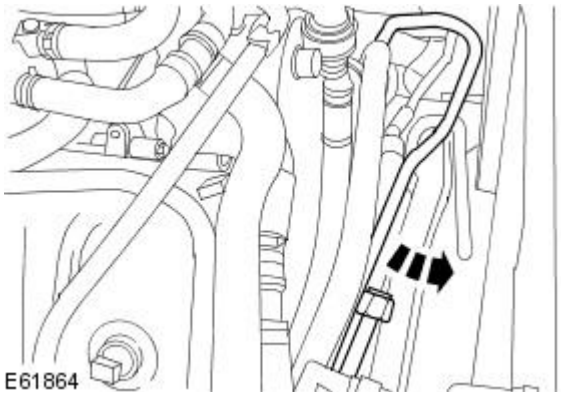


**25.** Remove the AIR control valve to exhaust manifold tube.

## Installation

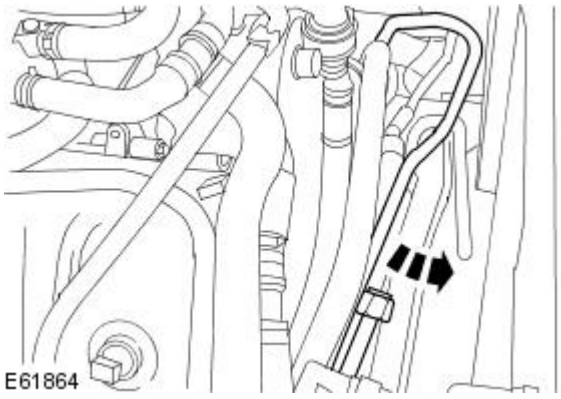


**1.** Install the AIR control valve to exhaust manifold tube.

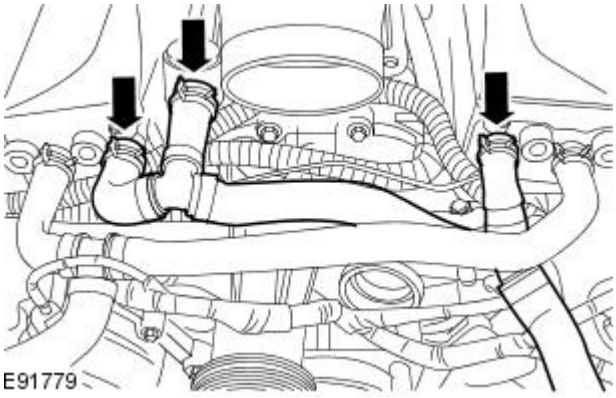


**2.** NOTE: Remove and discard the blanking plugs.

Connect the coolant hoses.

GETtheMANUALS.org

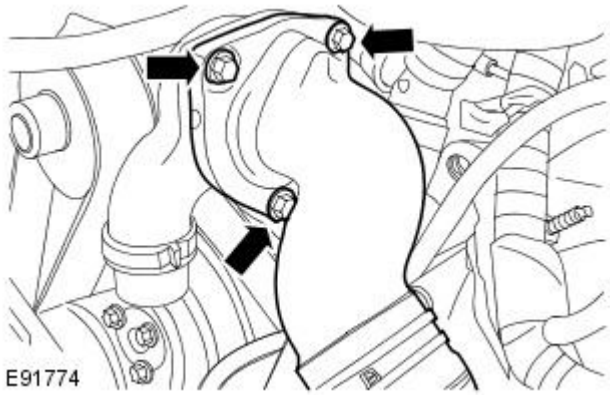


**3.** NOTE: Install a new O-ring seal.

• NOTE: Remove and discard the blanking plugs.

Secure the thermostat housing.

- Tighten to 9 Nm.

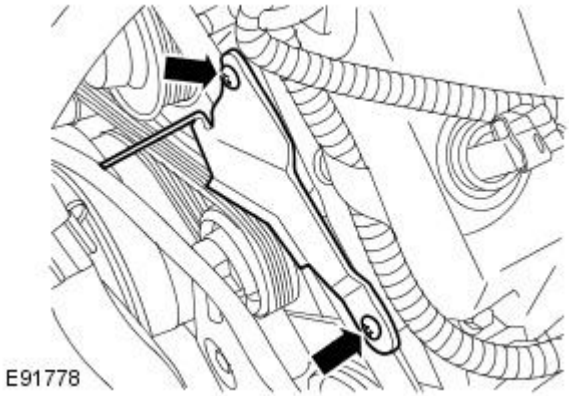


**4.** Install the AIR control valve retaining bracket.

- Tighten to 8 Nm.

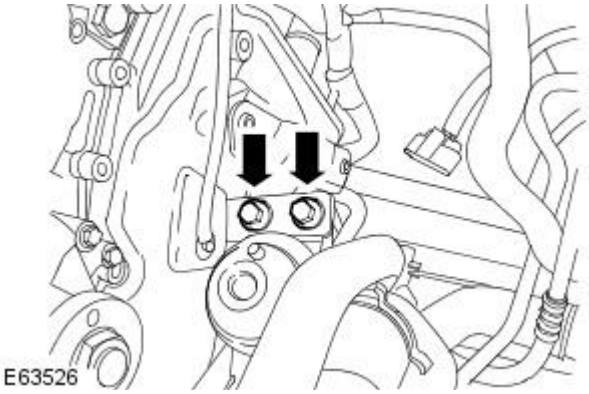


**5.** Install the AIR control valve.

- Tighten to 35 Nm.

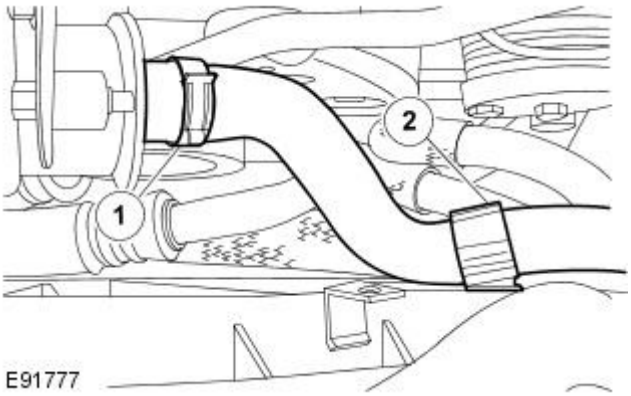


**6.** Connect the AIR control valve air supply hose.

1. Connect the AIR control valve air supply hose.
2. Secure the hose to the cooling fan motor and shroud.

GETtheMANUALS.org

**7.** Secure the hose to the cooling fan motor and shroud.

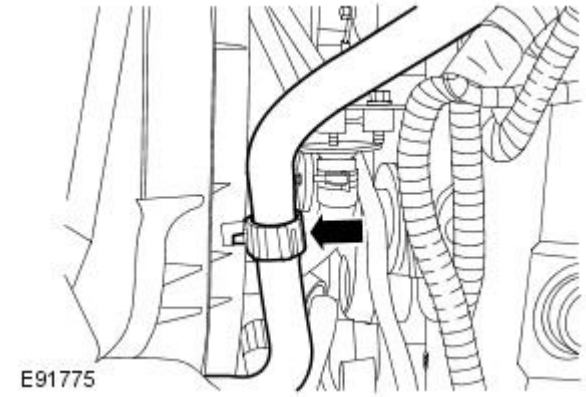


**8.** Connect the AIR control valve vacuum hose.

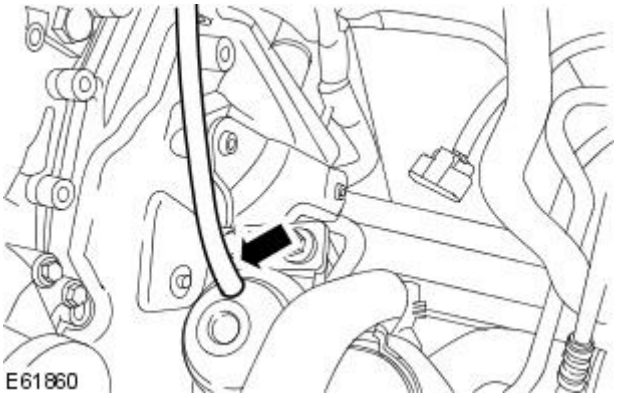


**9.** Connect the AIR control valve to exhaust manifold tube.

- Tighten to 35 Nm.

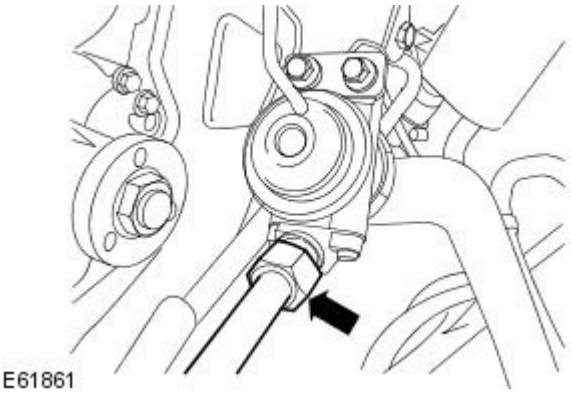


**10.** NOTE: Remove and discard the blanking plugs.

Connect the coolant hose.

1. Connect the coolant hose.
2. Secure the coolant hose to the cooling fan motor and shroud.

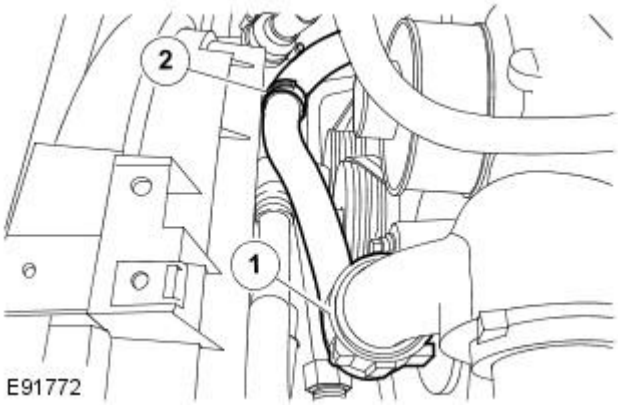


GETtheMANUALS.org

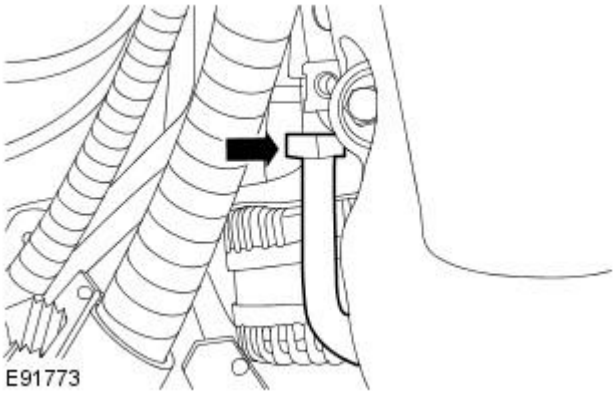


**11.** Connect the AIR control valve to exhaust manifold tube to the right-hand exhaust manifold.

- Tighten to 35 Nm.

**12.** Install the coolant expansion tank.
For additional information, refer to: Coolant Expansion Tank (303-03C Engine Cooling - 2.7L V6 - TdV6, Removal and Installation).

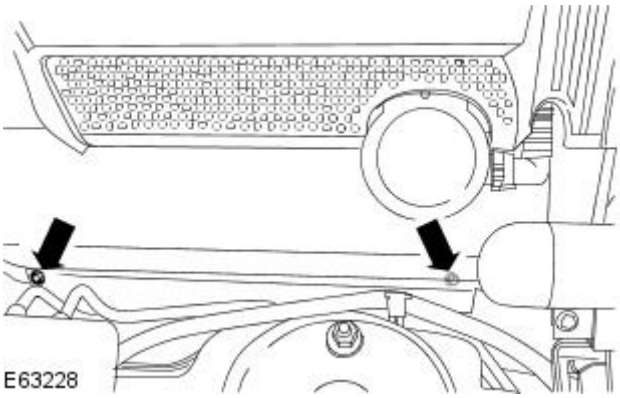


**13.** Install the right-hand exhaust manifold heat shield upper retaining bolts.

- Tighten to 3 Nm.

**14.** Raise the ramp.

**15.** Install the right-hand exhaust manifold heat shield.

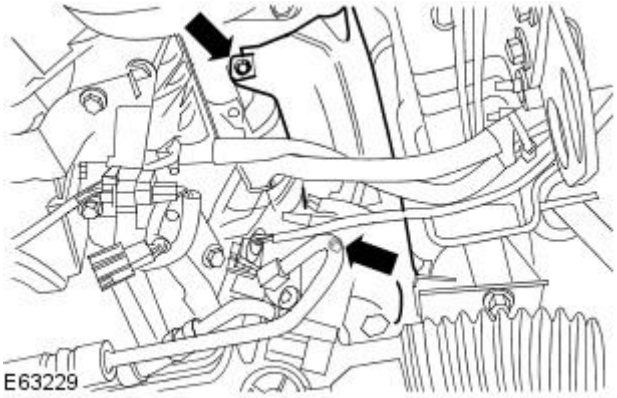


- Tighten to 3 Nm.

**16.** Connect the AIR control valve to exhaust manifold tube to the left-hand exhaust manifold.

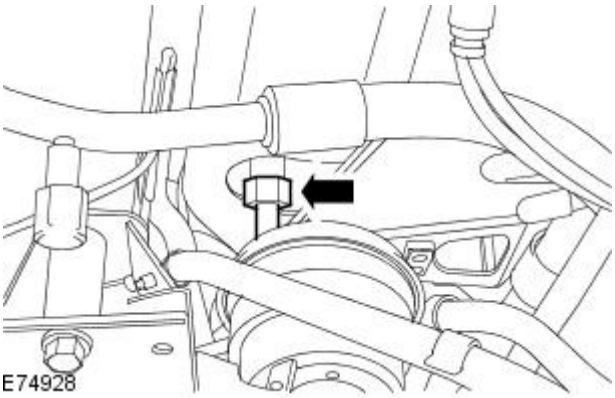


- Tighten to 3 Nm.

**17.** Install the radiator splash shield.
For additional information, refer to: Radiator Splash Shield (501-02 Front End Body Panels, Removal and Installation).

**18.** Install the air deflector.
For additional information, refer to: Air Deflector (501-02 Front End Body Panels, Removal and Installation).

**19.** Lower the ramp.

GETtheMANUALS.org

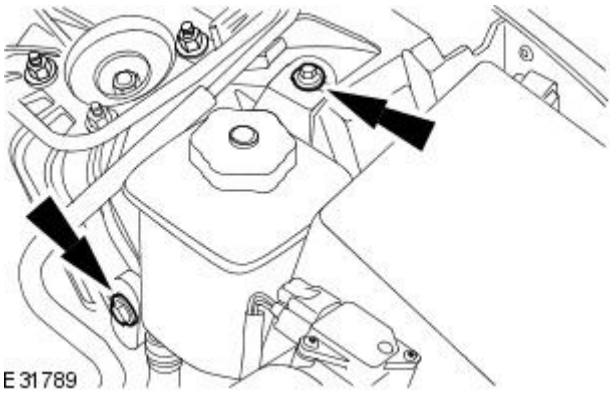


**20.** Secure the power steering fluid reservoir.

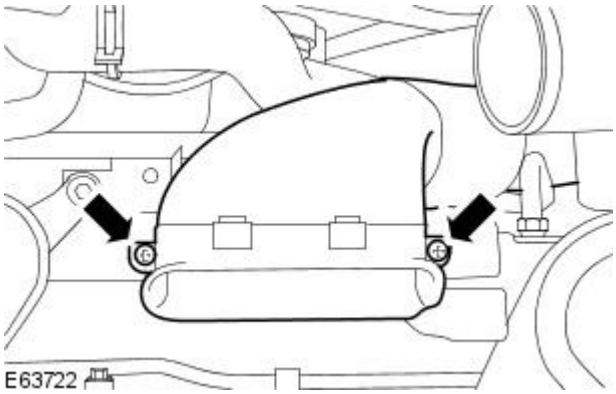


**21.** Install the air cleaner intake duct.

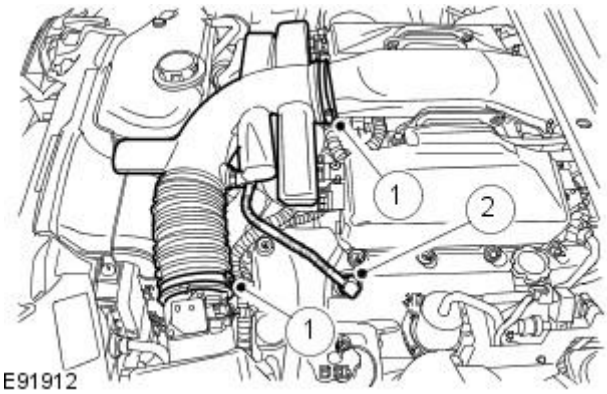


**22.** Install the air cleaner outlet pipe.

1. Install the air cleaner outlet pipe.
2. Connect the PCV hose.

**23.** Install the radiator grille opening panel.
For additional information, refer to: Radiator Grille Opening Panel (501-02 Front End Body Panels, Removal and Installation).

**24.** Fill the cooling system.
For additional information, refer to: Cooling System Draining, Filling and Bleeding (303-03C Engine Cooling - 2.7L V6 - TdV6, General Procedures).

**25.** Install the engine cover.

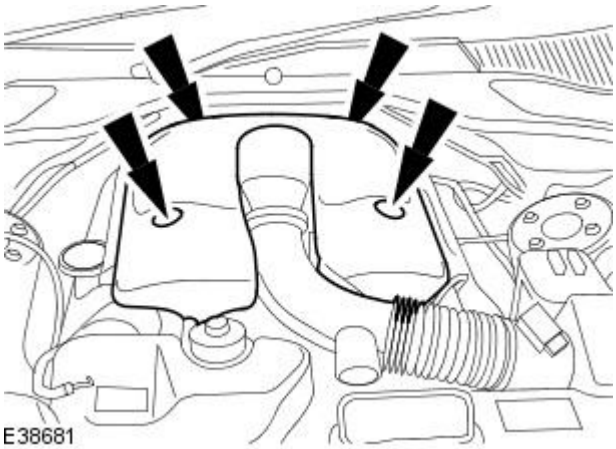


**26.** Connect the battery ground cable.
For additional information, refer to: Battery Connect (414-01 Battery, Mounting and Cables, General Procedures).

GETtheMANUALS.org

# Engine Emission Control - V8 4.2L Petrol / V8 S/C 4.2L Petrol / 2.5L NA V6 - AJV6 / 3.0L NA V6 - AJ27 - Secondary Air Injection (AIR) Pump

Removal and Installation

## Removal

1. Remove the radiator splash shield.
   For additional information, refer to: Radiator Splash Shield (501-02 Front End Body Panels, Removal and Installation).
2. Disconnect the secondary air injection (AIR) pump electrical connector.

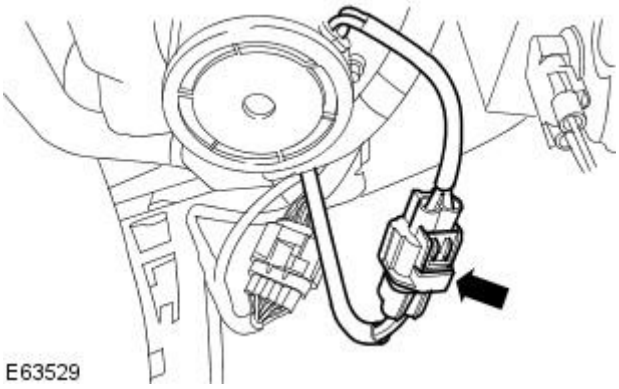


3. Disconnect the AIR pump hose.

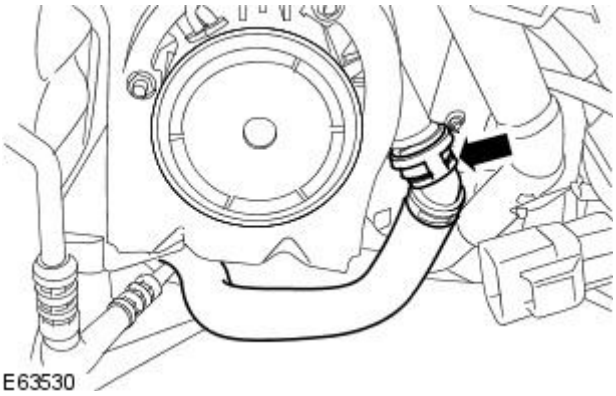


4. Remove the AIR pump retaining bolt.

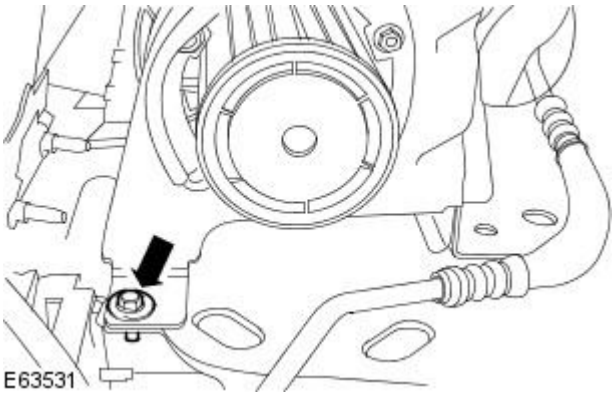


5. Remove the AIR pump.

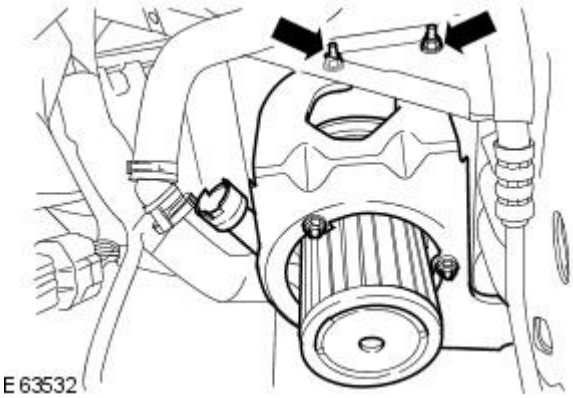


## Installation

GETtheMANUALS.org

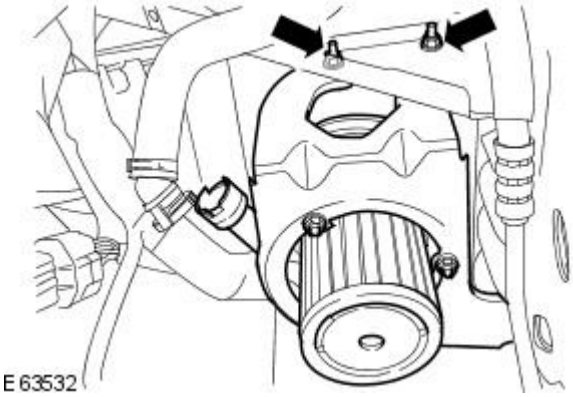


**1.** To install, reverse the removal procedure.

- Tighten to 9 Nm.

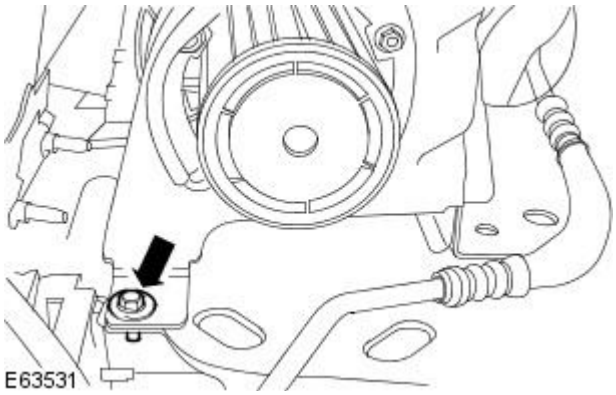


**2.** Tighten to 9 Nm.

**3.** NOTE: For NAS vehicles only.

If required, carry out a short drive cycle.
For additional information, refer to: Powertrain Control Module (PCM) Short Drive Cycle Self-Test (303-14A Electronic Engine Controls - 2.5L NA V6 - AJV6/3.0L NA V6 - AJ27, General Procedures).

GETtheMANUALS.org

# Engine Emission Control - 2.7L V6 - TdV6 -

**Torque Specifications**

| Description | Nm | lb-ft | lb-in |
|---|---|---|---|
| Exhaust gas recirculation (EGR) valve to cylinder head retaining bolts | 10 | – | 89 |
| EGR valve to EGR cooler retaining bolts | 10 | – | 89 |
| EGR valve tube to exhaust manifold retaining bolts | 10 | – | 89 |
| EGR valve cooler mounting bracket retaining bolt | 10 | – | 89 |
| EGR valve outlet tube to EGR valve retaining bolts | 10 | – | 89 |
| EGR valve outlet tube to timing cover retaining bolt | 5 | – | 44 |
| Fuel filter mounting bracket retaining 10 mm bolt | 25 | 18 | – |
| Fuel filter mounting bracket retaining 6 mm bolt | 10 | – | 89 |

GETtheMANUALS.org

# Engine Emission Control - 2.7L V6 - TdV6 - Engine Emission Control

Description and Operation

Crankcase Ventilation

The crankcase ventilation system on the 2.7L Diesel ensures that all gases emitted from the crankcase during engine running are separated from any oil particles.

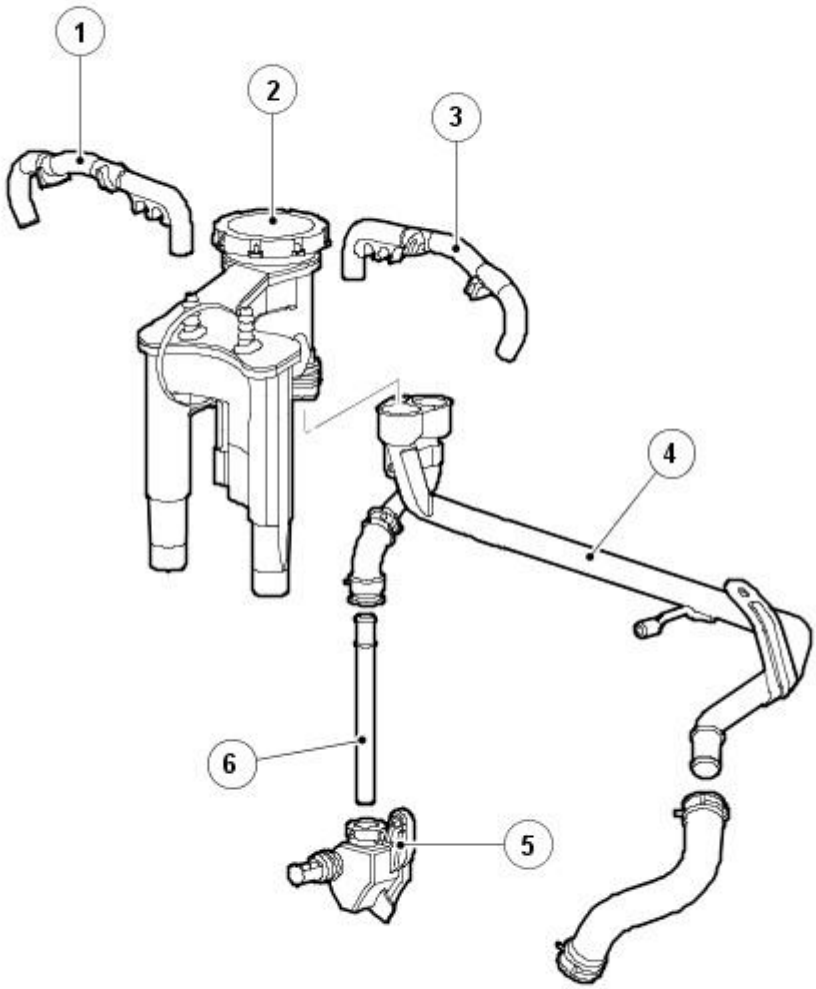


E66813

| Item | Part Number | Description |
|---|---|---|
| 1 | - | Left-hand breather tube |
| 2 | - | Crankcase vent oil seperator |
| 3 | - | Right-hand breather tube |
| 4 | - | Crankcase oil return tube |
| 5 | - | Crankcase oil return valve |
| 6 | - | Oil return tube |

Crankcase ventilation is by a cyclone seperator. The oil seperator is constructed from a plastic composite material. The oil seperator is located between the 'V' at the back of the engine block by means of three seals. The oil seperator contains a diaphragm and spring which opens under intake vacuum.

The ventilation systems first chamber is a horizontal void cavity fed by eight points. Once primary separation is complete, the partially cleaned vapor is sucked through a cyclone where the process further reduces the oil content. Prior to the vapor entering the air supply at the compressor, a diaphragm pressure balance valve operates to minimize the crankcase pressure variations caused by engine air demand and service condition.

Due to the shape and design of the cyclone unit, the oil and vapor are seperated more effectively. Vapor is directed into the inlet system and the heavier oil drains back into the engine.

Exhaust Emission Control

The exhaust of a diesel engine contains the following pollutants:

- Carbon Monoxide (CO)
- Hydrocarbons (HC)

GETtheMANUALS.org

- Particulates
- Oxides of Nitrogen (NOx)

These pollutants are primarily produced as a result of incomplete combustion of the fuel.

The particulates in the exhaust gases consist of pure carbon and various compounds such as metal oxide and sulphur.

Exhaust Gas Re-Circulation

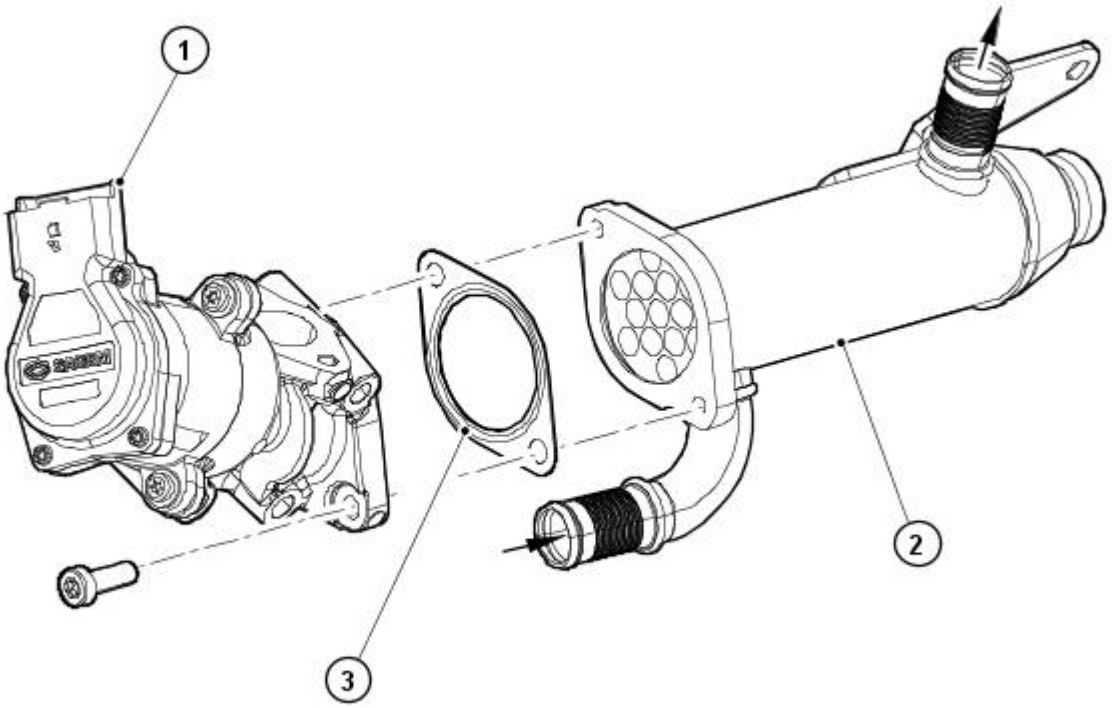


E52628

| Item | Part Number | Description |
|---|---|---|
| 1 | - | Exhaust gas recirculation (EGR) valve |
| 2 | - | EGR cooler |
| 3 | - | Gasket |

The exhaust gas re-circulation (EGR) system is fitted to the engine in order to reduce the amount of nitrogen oxide (NOx). This is done by reducing the temperature of the combustion process by introducing some waste exhaust gases into the inlet manifold. The effect of this is that there is a depletion of oxygen which reduces the temperature of the combustion process and in turn reduces the amount of NOx produced.

The engine control module (ECM) will determine the amount of EGR operation depending on the engine rpm, intake air temperature, coolant temperature and fuel flow rate. The amount of exhaust gas being recirculated is measured by a combination of position sensing of the valves and a mass air flow (MAF) sensor.

The EGR valves are operated through their full range at each engine start-up. This is to clear any carbon deposits that may have built up whilst the engine was running.

The EGR system is continually monitored for faults. Depending on how the system fails, the ECM will dictate whether the malfunction indication light (MIL) is on or off. In the event of a failure of the EGR system, the ECM will use substitute values and the EGR function will become inoperative.

The EGR cooler is connected to the vehicle cooling system via hoses and is there to cool the exhaust gases being recirculated.

The EGR valve and cooler are supplied as separate components. The EGR valve itself should not be disassembled.

GETtheMANUALS.org

# Engine Emission Control - 2.7L V6 - TdV6 - Engine Emission Control

Diagnosis and Testing

## Principle of operation

Exhaust gas recirculation (EGR)

The EGR system recycles exhaust gases back through the combustion process to reduce NOx emissions.

By introducing this gas into the air intake, oxygen content and combustion temperatures are reduced, which reduces the NOx emissions.

High EGR flow is necessary during cruising and mid-range acceleration, when combustion temperatures are typically very high, while lower EGR flow is needed during low speed and light load conditions.

No EGR flow should occur during conditions when it could adversely affect engine operating efficiency or vehicle driveability, such as engine warm-up, idle, etc.

The EGR function of the 2.7 L engine is managed by the engine control module (ECM), which controls the operation of stepper motors, allowing precise control of the EGR valve actuators.

The ECM determines the optimum EGR flow using inputs from sensors in the engine management system, including the mass air flow meters, coolant temperature sensor, and intake air temperature sensor.

Positive crankcase ventilation

The crankcase ventilation system uses the depression created in the air intake to draw vapors from the crankcase through the engine where they are burnt with the fuel/air charge.

By doing this, any build-up of pressure inside the crankcase is avoided, reducing blow-by and potential oil leakage problems, while still reducing emissions into the atmosphere.

The 2.7 L engine crankcase ventilation is through a cyclone separator mounted in the engine 'V'.

The separator consists of a diaphragm and spring inside the casing which respond to crankcase pressure variations and separate the oil from the vapor, allowing the oil back into the engine while the vapor is directed to the intake system.

## Inspection and verification

1. **1.** Verify the customer concern.
2. **2.** Visually inspect for obvious signs of mechanical or electrical damage.

**Visual inspection chart**

| Mechanical | Electrical |
|---|---|
| • Engine breather hoses<br>• Cyclone separator<br>• EGR Pipes (check for cracks) | • Electrical connections to the stepper motor(s)<br>• Stepper motor(s)<br>• Harnesses |

## Symptom chart

| Symptom | Possible source | Action |
|---|---|---|
| Difficult to start | EGR valve stuck open | Inspect the system (see visual inspection). Check for DTCs. |
| Poor idle quality | EGR valve stuck open | Inspect the system (see visual inspection). Check for DTCs. |
| Lack of power when accelerating | EGR valve stuck open | Inspect the system (see visual inspection). Check for DTCs. |
| Engine stops/stalls | EGR valve stuck open | Inspect the system (see visual inspection). Check for DTCs. |
| Excessive fuel consumption | EGR valve stuck open | Inspect the system (see visual inspection). Check for DTCs. |
| Excessive black smoke | EGR valve stuck open | Inspect the system (see visual inspection). Check for DTCs. |
| Excessive emissions | EGR system not operating | Inspect the system (see visual inspection). Check for DTCs. |
| Loud 'ticking' noise with engine running | EGR pipes cracked | Closely inspect the pipes for cracks (particularly at the corrugated sections). |
| Excessive blow-by | Crankcase ventilation system restricted | Inspect the hoses. Check each hose for restriction/blockage by gently blowing through. Check for blockage of the separator. |
| Engine oil leaks | Crankcase ventilation system restricted | Inspect the hoses. Check each hose for restriction/blockage by gently blowing through. Check for blockage of the separator. |

CAUTION: When probing connectors to take measurements in the course of the pinpoint tests, use the adaptor kit, part number 3548-1358-00. Failure to follow this instruction may result in damage to the vehicle.

• NOTE: When performing voltage or resistance tests, always use a digital multimeter (DMM) accurate to 3 decimal places, and with an up-to-date calibration certificate. When testing resistance, always take the resistance of the DMM leads into account.

• NOTE: Check and rectify basic faults before beginning diagnostic routines involving pinpoint tests.

• NOTE: If diagnostic trouble codes (DTCs) are recorded and the symptom is not present when performing the pinpoint tests, an intermittent concern may be the cause. Always check for loose connections and corroded terminals.

• NOTE: For a full list of DTCs,
REFER to: Electronic Engine Controls (303-14C Electronic Engine Controls - 2.7L V6 - TdV6, Diagnosis and Testing).

**Diagnostic Trouble Code (DTC) index**

| DTC | Condition | Possible source | Action |
|---|---|---|---|
| P0401 | Insufficient EGR flow detected | • EGR valve(s) stuck closed<br>• Stepper motor(s) fault<br>• Harness fault<br>• Restriction/blockage in EGR pipework | Check pipework for restriction. |

ALLDATAmanuals.com

| DTC | Condition | Possible source | Action |
|---|---|---|---|
| P0402 | Excessive EGR flow detected | • EGR valve(s) stuck open<br>• Stepper motor(s) fault<br>• Harness fault<br>• Pipework damaged/leaking | Check the pipework, check the mechanical function of the throttle valve. For throttle actuator and circuit tests, GO to Pinpoint Test A. and GO to Pinpoint Test C. |
| P0403 | EGR control circuit | • EGR valve control circuit: high resistance<br>• EGR valve control circuit: short circuit to battery<br>• EGR valve control circuit: short circuit to ground | For throttle actuator and circuit tests, GO to Pinpoint Test A. and GO to Pinpoint Test C. |
| P0404 | EGR control circuit | • EGR control circuit: range/performance | For throttle actuator and circuit tests, GO to Pinpoint Test A. and GO to Pinpoint Test C. |
| P0405 | EGR sensor circuit | • EGR sensor circuit A: low input<br>• Stepper motor fault | For EGR sensor and circuit tests, GO to Pinpoint Test B. |
| P0406 | EGR sensor circuit | • EGR sensor circuit A: high input<br>• Stepper motor fault | For EGR sensor and circuit tests, GO to Pinpoint Test B. |
| P0407 | EGR sensor circuit | • EGR sensor circuit B: low input<br>• Stepper motor fault | For EGR sensor and circuit tests, GO to Pinpoint Test B. |
| P0408 | EGR sensor circuit | • EGR sensor circuit B: high input<br>• Stepper motor fault | For EGR sensor and circuit tests, GO to Pinpoint Test B. |
| P0487 | EGR throttle position control circuit | • EGR throttle position control circuit: high resistance<br>• EGR throttle position control circuit: short circuit to battery<br>• EGR throttle position control circuit: short circuit to ground | For throttle actuator and circuit tests, GO to Pinpoint Test A. and GO to Pinpoint Test C. |
| P0488 | EGR throttle position range/performance | • Stepper motor fault<br>• Stepper motor harness fault | For throttle actuator and circuit tests, GO to Pinpoint Test A. and GO to Pinpoint Test C. |
| P1334 | EGR throttle position sensor minimum/maximum stop performance | • Stepper motor fault<br>• Stepper motor harness fault | For throttle actuator and circuit tests, GO to Pinpoint Test A. and GO to Pinpoint Test C. |
| P1335 | EGR position sensor minimum/maximum stop performance | • Stepper motor fault<br>• Stepper motor harness fault | For throttle actuator and circuit tests, GO to Pinpoint Test A. and GO to Pinpoint Test C. |
| P2141 | EGR throttle circuit low | • Stepper motor fault<br>• Stepper motor harness fault | For throttle actuator and circuit tests, GO to Pinpoint Test A. and GO to Pinpoint Test C. |
| P2142 | EGR throttle circuit high | • Stepper motor fault<br>• Stepper motor harness fault | For throttle actuator and circuit tests, GO to Pinpoint Test A. and GO to Pinpoint Test C. |

## Inspection and Verification

**This pinpoint test is intended to diagnose the following:**

- Short circuit to GROUND in the EGR throttle actuator (ETA) circuit
- Short circuit to POWER in the EGR throttle actuator (ETA) circuit
- Open circuit in the EGR throttle actuator (ETA) circuit
- EGR throttle actuator (ETA) circuit
- ECM

EGR throttle actuator (ETA) connector

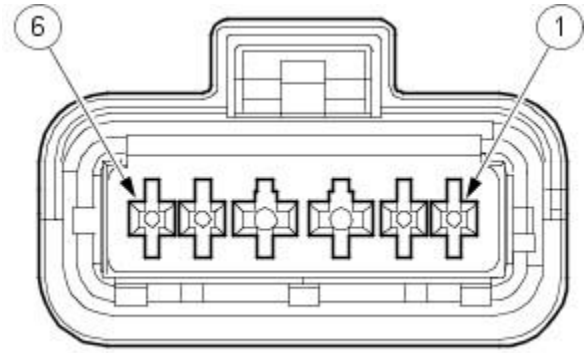


E54258

| | |
|---|---|
| EGR throttle sensor - signal | 02 |
| EGR throttle sensor - supply | 06 |
| EGR throttle sensor - ground | 01 |

Engine control module (ECM) connector

GETtheMANUALS.org

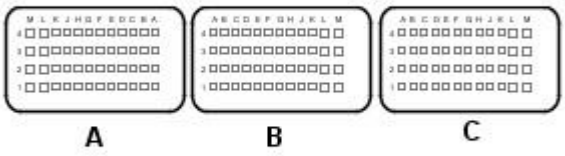


E54251

| | |
|---|---|
| EGR throttle sensor - ground | B-F2 |
| EGR throttle sensor - supply | B-F1 |
| EGR throttle sensor - signal | B-E1 |

## Pinpoint Tests

| PINPOINT TEST A : EGR THROTTLE ACTUATOR AND CIRCUIT (1) | |
|---|---|
| **TEST CONDITIONS** | **DETAILS/RESULTS/ACTIONS** |
| **A1: CHECK THE ETA SENSOR RETURN LINE** | |
| | 1 Key off. |
| | 2 ETA connector disconnected. |
| | 3 Key on, engine off. |
| | 4 Measure the resistance between: |
| | EGR throttle sensor - ground - Pin 01 — Negative post |
| | Is the resistance less than 10 ohms?<br>**Yes**<br>GO to A2.<br>**No**<br>GO to A14. |
| **A2: CHECK THE ETA VOLTAGE** | |
| | 1 Measure the voltage between: |
| | EGR throttle sensor - supply - Pin 06 — Negative post |
| | Is the voltage between 4.8 volts - 5.2 volts?<br>**Yes**<br>GO to A3.<br>**No**<br>GO to A11. |
| **A3: CHECK THE ETA SIGNAL LINE FOR SHORT CIRCUIT TO GROUND** | |
| | 1 Measure the resistance between: |
| | EGR throttle sensor - signal - Pin 02 — Negative post |
| | Is the resistance greater than 100 Kohms?<br>**Yes**<br>GO to A4.<br>**No**<br>GO to A7. |
| **A4: CHECK THE ETA SIGNAL LINE FOR SHORT CIRCUIT TO POWER** | |
| | 1 Measure the resistance between: |
| | EGR throttle sensor - signal - Pin 02 — Positive post |
| | Is the resistance greater than 100 Kohms?<br>**Yes**<br>GO to A5.<br>**No**<br>GO to A9. |
| **A5: CHECK THE ETA SIGNAL LINE FOR SHORT CIRCUIT TO SENSOR POWER** | |
| | 1 Measure the resistance between: |
| | EGR throttle sensor - signal - Pin 02 — EGR throttle sensor - supply - Pin 06 |
| | Is the resistance greater than 100 Kohms?<br>**Yes**<br>GO to A6.<br>**No**<br>GO to A10. |
| **A6: CHECK THE ETA SIGNAL LINE FOR OPEN CIRCUIT** | |
| | 1 Key off. |
| | 2 ECM connector disconnected. |
| | 3 Measure the resistance between: |
| | EGR throttle sensor - signal - Pin 02 — EGR throttle sensor - signal - Pin B-E1 |
| | Is the resistance less than 10 ohms?<br>**Yes**<br>An intermittent fault may be present in the wiring harness. Visually check for chaffed wires or other physical damage to the harness. If no fault is found in the circuit, suspect the following component(s):- ETA connector- ECM connector- ETA-ECM<br>**No**<br>REPAIR the open circuit. For additional information, refer to the wiring diagrams. |
| **A7: CHECK THE ETA CIRCUIT(S) FOR SIGNAL AND RETURN LINES SHORTED TOGETHER** | |
| | 1 Key off. |
| | 2 ECM connector disconnected. |
| | 3 Key on, engine off. |

GETtheMANUALS.org

| | |
|---|---|
| | 4 Measure the resistance between: |
| | EGR throttle sensor - signal - Pin 02 / EGR throttle sensor - ground - Pin 01 |
| | Is the resistance greater than 100 Kohms?<br>**Yes**<br>GO to A8.<br>**No**<br>REPAIR the short circuit. For additional information, refer to the wiring diagrams. |
| **A8: CHECK WHETHER THE SHORT CIRCUIT TO GROUND IS IN THE ETA HARNESS OR ECU** | |
| | 1 Measure the resistance between: |
| | EGR throttle sensor - signal - Pin 02 / Negative post |
| | Is the resistance greater than 100 Kohms?<br>**Yes**<br>Suspect:- ECM<br>**No**<br>REPAIR the short circuit. For additional information, refer to the wiring diagrams. |
| **A9: CHECK WHETHER THE SHORT CIRCUIT TO POWER IS IN THE ETA HARNESS OR ECU** | |
| | 1 Key off. |
| | 2 ECM connector disconnected. |
| | 3 Key on, engine off. |
| | 4 Measure the resistance between: |
| | EGR throttle sensor - signal - Pin 02 / Positive post |
| | Is the resistance greater than 100 Kohms?<br>**Yes**<br>Suspect:- ECM<br>**No**<br>REPAIR the short circuit. For additional information, refer to the wiring diagrams. |
| **A10: CHECK WHETHER THE SHORT CIRCUIT IS IN THE ETA HARNESS OR CONTROL UNIT** | |
| | 1 Key off. |
| | 2 ECM connector disconnected. |
| | 3 Key on, engine off. |
| | 4 Measure the resistance between: |
| | EGR throttle sensor - signal - Pin 02 / EGR throttle sensor - supply - Pin 06 |
| | Is the resistance greater than 100 Kohms?<br>**Yes**<br>Suspect:- ECM<br>**No**<br>REPAIR the short circuit. For additional information, refer to the wiring diagrams. |
| **A11: CHECK THE 5 VOLT SUPPLY LINE FOR SHORT CIRCUIT TO GROUND** | |
| | 1 Measure the resistance between: |
| | EGR throttle sensor - supply - Pin 06 / Negative post |
| | Is the resistance greater than 100 Kohms?<br>**Yes**<br>GO to A12.<br>**No**<br>GO to A17. |
| **A12: CHECK THE 5 VOLT SUPPLY LINE FOR SHORT CIRCUIT TO POWER** | |
| | 1 Measure the resistance between: |
| | EGR throttle sensor - supply - Pin 06 / Positive post |
| | Is the resistance greater than 100 Kohms?<br>**Yes**<br>GO to A13.<br>**No**<br>GO to A19. |
| **A13: CHECK THE ETA 5 VOLT SUPPLY LINE FOR OPEN CIRCUIT** | |
| | 1 Key off. |
| | 2 ECM connector disconnected. |
| | 3 Measure the resistance between: |
| | EGR throttle sensor - supply - Pin 06 / EGR throttle sensor - supply - Pin B-F1 |
| | Is the resistance less than 10 ohms?<br>**Yes**<br>Suspect :- ECM connector- ECM<br>**No**<br>REPAIR the open circuit. For additional information, refer to the wiring diagrams. |
| **A14: CHECK THE ETA SENSOR RETURN LINE FOR SHORT CIRCUIT TO POWER** | |
| | 1 Measure the resistance between: |
| | EGR throttle sensor - ground - Pin 01 / Positive post |
| | Is the resistance greater than 100 Kohms?<br>**Yes**<br>GO to A15.<br>**No**<br>GO to A20. |
| **A15: CHECK WHETHER THE 5 VOLT SUPPLY AND SIGNAL RETURN LINES ARE SHORTED TOGETHER** | |
| | 1 Key off. |
| | 2 ECM connector disconnected. |
| | 3 Key on, engine off. |
| | 4 Measure the resistance between: |
| | EGR throttle sensor - supply - Pin 06 / EGR throttle sensor - ground - Pin 01 |
| | Is the resistance greater than 100 Kohms?<br>**Yes**<br>GO to A16.<br>**No**<br>REPAIR the short circuit. For additional information, refer to the wiring diagrams. |
| **A16: CHECK THE ETA SENSOR RETURN LINE FOR OPEN CIRCUIT** | |

SERVICEMANUALS.org

| | |
|---|---|
| | 1 Measure the resistance between: |
| | EGR throttle sensor - ground - Pin 01 / EGR throttle sensor - ground - Pin B-F2 |
| | Is the resistance less than 10 ohms?<br>**Yes**<br>Suspect :- ECM connector- ECM<br>**No**<br>REPAIR the open circuit. For additional information, refer to the wiring diagrams. |
| **A17: CHECK WHETHER THE 5 VOLT SUPPLY AND SIGNAL RETURN LINES ARE SHORTED TOGETHER** | |
| | 1 Key off. |
| | 2 ECM connector disconnected. |
| | 3 Key on, engine off. |
| | 4 Measure the resistance between: |
| | EGR throttle sensor - supply - Pin 06 / EGR throttle sensor - ground - Pin 01 |
| | Is the resistance greater than 100 Kohms?<br>**Yes**<br>GO to A18.<br>**No**<br>REPAIR the short circuit. For additional information, refer to the wiring diagrams. |
| **A18: CHECK WHETHER THE SHORT CIRCUIT TO GROUND IS IN THE ETA HARNESS OR ECU** | |
| | 1 Measure the resistance between: |
| | EGR throttle sensor - supply - Pin 06 / Negative post |
| | Is the resistance greater than 100 Kohms?<br>**Yes**<br>Suspect:- ECM<br>**No**<br>REPAIR the short circuit. For additional information, refer to the wiring diagrams. |
| **A19: CHECK WHETHER THE SHORT CIRCUIT TO POWER IS IN THE ETA HARNESS OR ECU** | |
| | 1 Key off. |
| | 2 ECM connector disconnected. |
| | 3 Key on, engine off. |
| | 4 Measure the resistance between: |
| | EGR throttle sensor - ground - Pin 01 / Positive post |
| | Is the resistance greater than 100 Kohms?<br>**Yes**<br>Suspect:- ECM<br>**No**<br>REPAIR the short circuit. For additional information, refer to the wiring diagrams. |
| **A20: CHECK WHETHER THE SHORT TO POWER IS IN THE ETA HARNESS OR ECU** | |
| | 1 Key off. |
| | 2 ECM connector disconnected. |
| | 3 Key on, engine off. |
| | 4 Measure the resistance between: |
| | EGR throttle sensor - ground - Pin 01 / Positive post |
| | Is the resistance greater than 100 Kohms?<br>**Yes**<br>Suspect:- ECM<br>**No**<br>REPAIR the short circuit. For additional information, refer to the wiring diagrams. |

## Inspection and Verification

- This pinpoint test is intended to diagnose the following:
- Short circuit to GROUND in the EGR throttle valve (ETV) circuit
- Short circuit to POWER in the EGR throttle valve (ETV) circuit
- Open circuit in the EGR throttle valve (ETV) circuit
- EGR throttle valve (ETV)
- ECM

EGR throttle actuator (ETA) connector

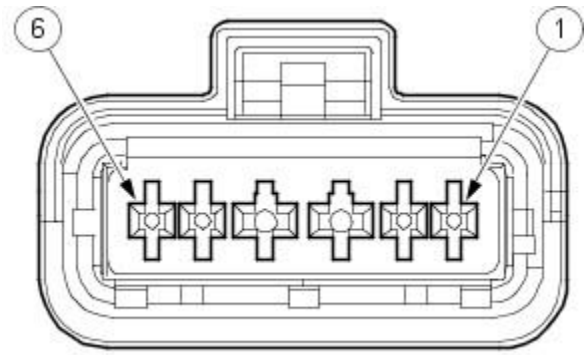


E54258

| | |
|---|---|
| EGR throttle valve - control 2 | 04 |
| EGR throttle valve - control 1 | 03 |

Engine control module (ECM) connector

GETtheMANUALS.org

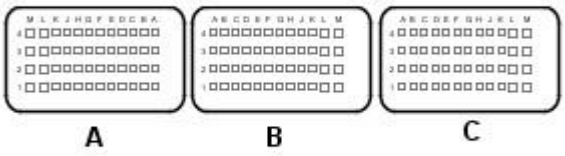


E54251

| | |
|---|---|
| EGR throttle valve - control 2 | C-K4 |
| EGR throttle valve - control 1 | C-J4 |

## Pinpoint Tests

| PINPOINT TEST B : EGR THROTTLE SENSOR AND CIRCUIT | |
|---|---|
| **TEST CONDITIONS** | **DETAILS/RESULTS/ACTIONS** |
| **B1: CHECK THE ETV SIGNAL LINE FOR A SHORT CIRCUIT TO GROUND** | |
| | 1 Key off. |
| | 2 ETA connector disconnected. |
| | 3 Key on, engine off. |
| | 4 Measure the resistance between: |
| | EGR throttle valve - control 1 - Pin 03 — Negative post |
| | EGR throttle valve - control 2 - Pin 04 — Negative post |
| | Are the resistances greater than 100 Kohms?<br>**Yes**<br>GO to B2.<br>**No**<br>GO to B4. |
| **B2: CHECK THE ETV SIGNAL LINE FOR A SHORT CIRCUIT TO POWER** | |
| | 1 Measure the resistance between: |
| | EGR throttle valve - control 1 - Pin 03 — Positive post |
| | EGR throttle valve - control 2 - Pin 04 — Positive post |
| | Are the resistances greater than 100 Kohms?<br>**Yes**<br>GO to B3.<br>**No**<br>GO to B5. |
| **B3: CHECK THE ETV SIGNAL CIRCUIT FOR CONTINUITY** | |
| | 1 Key off. |
| | 2 ECM connector disconnected. |
| | 3 Measure the resistance between: |
| | EGR throttle valve - control 1 - Pin 03 — EGR throttle valve - control 1 - Pin C-J4 |
| | EGR throttle valve - control 2 - Pin 04 — EGR throttle valve - control 2 - Pin C-K4 |
| | Are the resistances less than 10 ohms?<br>**Yes**<br>An intermittent fault may be present in the wiring harness. Visually check for chaffed wires or other physical damage to the harness. If no fault is found in the circuit, suspect the following component(s):- ETV connector- ECM connector- ETV- ECM<br>**No**<br>REPAIR the open circuit. For additional information, refer to the wiring diagrams. |
| **B4: CHECK WHETHER THE SHORT CIRCUIT TO GROUND IS IN THE ETV HARNESS OR ECU** | |
| | 1 Key off. |
| | 2 ECM connector disconnected. |
| | 3 Key on, engine off. |
| | 4 Measure the resistance between: |
| | EGR throttle valve - control 1 - Pin 03 — Negative post |
| | EGR throttle valve - control 2 - Pin 04 — Negative post |
| | Are the resistances greater than 100 Kohms?<br>**Yes**<br>Harness is OK.Suspect :- ECM<br>**No**<br>REPAIR the short circuit. For additional information, refer to the wiring diagrams. |
| **B5: CHECK WHETHER THE SHORT CIRCUIT TO POWER IS IN THE ETV HARNESS OR ECU** | |
| | 1 Key off. |
| | 2 ECM connector disconnected. |
| | 3 Key on, engine off. |
| | 4 Measure the resistance between: |
| | EGR throttle valve - control 1 - Pin 03 — Positive post |
| | EGR throttle valve - control 2 - Pin 04 — Positive post |
| | Are the resistances greater than 100 Kohms?<br>**Yes**<br>Harness is OK.Suspect :- ECM<br>**No**<br>REPAIR the short circuit. For additional information, refer to the wiring diagrams. |

GETtheMANUALS.org

## Inspection and Verification

**This pinpoint test is intended to diagnose the following:**

- Short circuit to GROUND in the EGR throttle actuator (ETA) circuit
- Short circuit to POWER in the EGR throttle actuator (ETA) circuit
- Open circuit in the EGR throttle actuator (ETA) circuit
- EGR throttle actuator
- ECM

EGR throttle actuator (ETA) connector

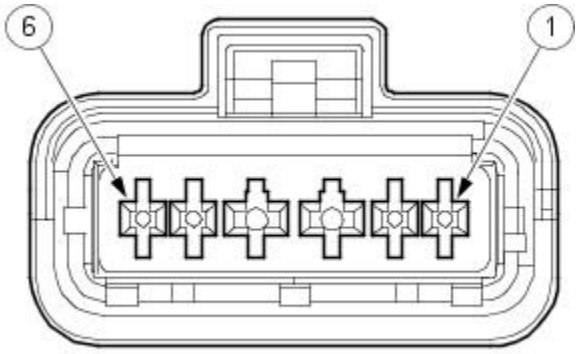


E54258

| | |
|---|---|
| EGR throttle valve - control 2 | 04 |
| EGR throttle valve - control 1 | 03 |
| EGR throttle sensor - signal | 02 |
| EGR throttle sensor - supply | 06 |
| EGR throttle sensor - ground | 01 |

Engine control module (ECM) connector

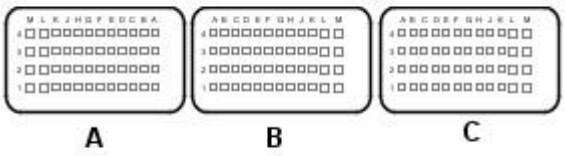


E54251

| | |
|---|---|
| EGR throttle valve - control 2 | C-K4 |
| EGR throttle valve - control 1 | C-J4 |
| EGR throttle sensor - ground | B-F2 |
| EGR throttle sensor - supply | B-F1 |
| EGR throttle sensor - signal | B-E1 |

## Pinpoint Tests

| PINPOINT TEST C : EGR THROTTLE ACTUATOR AND CIRCUIT (2) | |
|---|---|
| **TEST CONDITIONS** | **DETAILS/RESULTS/ACTIONS** |
| **C1: CHECK THE ETA PID** | |
| | 1 Key on, engine off. |
| | 2 Access the ECM-throttle controller deviation PID using a scan tool. |
| | 3 Slowly increase the engine speed to 1500 rpm while monitoring the PID. |
| | Did percentage deviation remain within the range of -15% and 5%?<br>**Yes**<br>No fault found.<br>**No**<br>GO to C2. |
| **C2: CHECK THE ETA SENSOR RETURN LINE CONTINUITY** | |
| | 1 Key off. |
| | 2 ETA connector disconnected. |
| | 3 Key on, engine off. |
| | 4 Measure the resistance between: |
| | EGR throttle sensor - ground - Pin 01 — Negative post |
| | Is the resistance less than 10 ohms?<br>**Yes**<br>GO to C3.<br>**No**<br>GO to C15. |
| **C3: CHECK THE ETA VOLTAGE** | |
| | 1 Measure the voltage between: |
| | EGR throttle sensor - supply - Pin 06 — Negative post |
| | Is the voltage between 4.8 volts - 5.2 volts?<br>**Yes**<br>GO to C4.<br>**No** |

GETtheMANUALS.org

GO to C12.

**C4: CHECK THE ETA SIGNAL LINE FOR SHORT CIRCUIT TO GROUND**

1 Measure the resistance between:

| | |
|---|---|
| EGR throttle sensor - signal - Pin 02 | Negative post |

Is the resistance greater than 100 Kohms?

**Yes**

GO to C5.

**No**

GO to C8.

**C5: CHECK THE ETA SIGNAL LINE FOR SHORT CIRCUIT TO POWER**

1 Measure the resistance between:

| | |
|---|---|
| EGR throttle sensor - signal - Pin 02 | Positive post |

Is the resistance greater than 100 Kohms?

**Yes**

GO to C6.

**No**

GO to C10.

**C6: CHECK THE ETA SIGNAL LINE FOR SHORT CIRCUIT TO SENSOR POWER**

1 Measure the resistance between:

| | |
|---|---|
| EGR throttle sensor - signal - Pin 02 | EGR throttle sensor - supply - Pin 06 |
| EGR throttle sensor - signal - Pin 02 | EGR throttle sensor - ground - Pin 01 |

Are the resistances greater than 100 Kohms?

**Yes**

GO to C7.

**No**

GO to C11.

**C7: CHECK THE ETA SIGNAL LINE FOR OPEN CIRCUIT**

1 Key off.

2 ECM connector disconnected.

3 Measure the resistance between:

| | |
|---|---|
| EGR throttle sensor - signal - Pin 02 | EGR throttle sensor - signal - Pin B-E1 |

Is the resistance less than 10 ohms?

**Yes**

GO to C22.

**No**

REPAIR the open circuit. For additional information, refer to the wiring diagrams.

**C8: CHECK THE ETA CIRCUIT(S) FOR SIGNAL AND RETURN LINES SHORTED TOGETHER**

1 Key off.

2 ECM connector disconnected.

3 Key on, engine off.

4 Measure the resistance between:

| | |
|---|---|
| EGR throttle sensor - signal - Pin 02 | EGR throttle sensor - ground - Pin 01 |

Is the resistance greater than 100 Kohms?

**Yes**

GO to C9.

**No**

REPAIR the short circuit. For additional information, refer to the wiring diagrams.

**C9: CHECK WHETHER THE SHORT CIRCUIT TO GROUND IS IN THE ETA HARNESS OR ECU**

1 Measure the resistance between:

| | |
|---|---|
| EGR throttle sensor - signal - Pin 02 | Negative post |

Is the resistance greater than 100 Kohms?

**Yes**

Suspect:- ECM

**No**

REPAIR the short circuit. For additional information, refer to the wiring diagrams.

**C10: CHECK WHETHER THE SHORT CIRCUIT TO POWER IS IN THE ETA HARNESS OR ECU**

1 Key off.

2 ECM connector disconnected.

3 Key on, engine off.

4 Measure the resistance between:

| | |
|---|---|
| EGR throttle sensor - signal - Pin 02 | Positive post |

Is the resistance greater than 100 Kohms?

**Yes**

Suspect:- ECM

**No**

REPAIR the short circuit. For additional information, refer to the wiring diagrams.

**C11: CHECK WHETHER THE SHORT CIRCUIT IS IN THE ETA HARNESS OR CONTROL UNIT**

1 Key off.

2 ECM connector disconnected.

3 Key on, engine off.

4 Measure the resistance between:

| | |
|---|---|
| EGR throttle sensor - signal - Pin 02 | EGR throttle sensor - supply - Pin 06 |
| EGR throttle sensor - signal - Pin 02 | EGR throttle sensor - ground - Pin 01 |

Are the resistances greater than 100 Kohms?

**Yes**

Suspect:- ECM

**No**

REPAIR the short circuit. For additional information, refer to the wiring diagrams.

**C12: CHECK THE 5 VOLT SUPPLY LINE FOR SHORT CIRCUIT TO GROUND**

1 Measure the resistance between:

| | |
|---|---|
| EGR throttle sensor - supply - Pin 06 | Negative post |

GETtheMANUALS.org

Is the resistance greater than 100 Kohms?
**Yes**
GO to C13.
**No**
GO to C18.

**C13: CHECK THE 5 VOLT SUPPLY LINE FOR SHORT CIRCUIT TO POWER**

1 Measure the resistance between:

| | |
|---|---|
| EGR throttle sensor - supply - Pin 06 | Positive post |

Is the resistance greater than 100 Kohms?
**Yes**
GO to C14.
**No**
GO to C20.

**C14: CHECK THE ETA 5 VOLT SUPPLY LINE FOR OPEN CIRCUIT**

1 Key off.
2 ECM connector disconnected.
3 Measure the resistance between:

| | |
|---|---|
| EGR throttle sensor - supply - Pin 06 | EGR throttle sensor - supply - Pin B-F1 |

Is the resistance less than 10 ohms?
**Yes**
Suspect :- ECM connector- ECM
**No**
REPAIR the open circuit. For additional information, refer to the wiring diagrams.

**C15: CHECK THE ETA SENSOR RETURN LINE FOR SHORT CIRCUIT TO POWER**

1 Measure the resistance between:

| | |
|---|---|
| EGR throttle sensor - ground - Pin 01 | Positive post |

Is the resistance greater than 100 Kohms?
**Yes**
GO to C16.
**No**
GO to C21.

**C16: CHECK WHETHER THE 5 VOLT SUPPLY AND SIGNAL RETURN LINES ARE SHORTED TOGETHER**

1 Key off.
2 ECM connector disconnected.
3 Measure the resistance between:

| | |
|---|---|
| EGR throttle sensor - supply - Pin 06 | EGR throttle sensor - ground - Pin 01 |

Is the resistance greater than 100 Kohms?
**Yes**
GO to C17.
**No**
REPAIR the short circuit. For additional information, refer to the wiring diagrams.

**C17: CHECK THE ETA SENSOR RETURN LINE FOR OPEN CIRCUIT**

1 Measure the resistance between:

| | |
|---|---|
| EGR throttle sensor - ground - Pin 01 | EGR throttle sensor - ground - Pin B-F2 |

Is the resistance less than 10 ohms?
**Yes**
Suspect :- ECM connector- ECM
**No**
REPAIR the open circuit. For additional information, refer to the wiring diagrams.

**C18: CHECK WHETHER THE 5 VOLT SUPPLY AND SIGNAL RETURN LINES ARE SHORTED TOGETHER**

1 Key off.
2 ECM connector disconnected.
3 Key on, engine off.
4 Measure the resistance between:

| | |
|---|---|
| EGR throttle sensor - supply - Pin 06 | EGR throttle sensor - ground - Pin 01 |

Is the resistance greater than 100 Kohms?
**Yes**
GO to C19.
**No**
REPAIR the short circuit. For additional information, refer to the wiring diagrams.

**C19: CHECK WHETHER THE SHORT CIRCUIT TO GROUND IS IN THE ETA HARNESS OR ECU**

1 Measure the resistance between:

| | |
|---|---|
| EGR throttle sensor - supply - Pin 06 | Negative post |

Is the resistance greater than 100 Kohms?
**Yes**
Suspect:- ECM
**No**
REPAIR the short circuit. For additional information, refer to the wiring diagrams.

**C20: CHECK WHETHER THE SHORT CIRCUIT TO POWER IS IN THE ETA HARNESS OR ECU**

1 Key off.
2 ECM connector disconnected.
3 Key on, engine off.
4 Measure the resistance between:

| | |
|---|---|
| EGR throttle sensor - ground - Pin 01 | Positive post |

Is the resistance greater than 100 Kohm?
**Yes**
Suspect:- ECM
**No**
REPAIR the short circuit. For additional information, refer to the wiring diagrams.

**C21: CHECK WHETHER THE SHORT CIRCUIT TO POWER IS IN THE ETA HARNESS OR ECU**

1 Key off.
2 ECM connector disconnected.
3 Key on, engine off.

GETtheMANUALS.org

| | |
|---|---|
| | 4 Measure the resistance between: |
| | EGR throttle sensor - ground - Pin 01 — Positive post |
| | Is the resistance greater than 100 Kohms?<br>**Yes**<br>Suspect:- ECM<br>**No**<br>REPAIR the short circuit. For additional information, refer to the wiring diagrams. |
| **C22: CHECK THE ETV SIGNAL LINE FOR SHORT CIRCUIT TO GROUND** | |
| | 1 Measure the resistance between: |
| | EGR throttle valve - control 1 - Pin 03 — Negative post |
| | EGR throttle valve - control 2 - Pin 04 — Negative post |
| | Are the resistances greater than 100 Kohms?<br>**Yes**<br>GO to C23.<br>**No**<br>REPAIR the short circuit. For additional information, refer to the wiring diagrams. |
| **C23: CHECK THE ETV SIGNAL LINE FOR SHORT CIRCUIT TO POWER** | |
| | 1 Measure the resistance between: |
| | EGR throttle valve - control 1 - Pin 03 — Positive post |
| | EGR throttle valve - control 2 - Pin 04 — Positive post |
| | Are the resistances greater than 100 Kohms?<br>**Yes**<br>GO to C24.<br>**No**<br>REPAIR the short circuit. For additional information, refer to the wiring diagrams. |
| **C24: CHECK THE ETV SIGNAL CIRCUIT FOR CONTINUITY** | |
| | 1 Measure the resistance between: |
| | EGR throttle valve - control 1 - Pin 03 — EGR throttle valve - control 1 - Pin C-J4 |
| | EGR throttle valve - control 2 - Pin 04 — EGR throttle valve - control 2 - Pin C-K4 |
| | Are the resistances less than 10 ohms?<br>**Yes**<br>An intermittent fault may be present in the wiring harness. Visually check for chaffed wires or other physical damage to the harness. If no fault is found in the circuit, suspect the following component(s):- ETA connector- ECM connector- ETA- ECM<br>**No**<br>REPAIR the open circuit. For additional information, refer to the wiring diagrams. |

GETtheMANUALS.org

# Engine Emission Control - 2.7L V6 - TdV6 - Exhaust Gas Recirculation (EGR) Valve LH

Removal and Installation

## Removal

1. Remove the exhaust gas recirculation (EGR) valve outlet tube.
   For additional information, refer to: Exhaust Gas Recirculation (EGR) Valve Outlet Tube (303-08B Engine Emission Control - 2.7L Diesel, Removal and Installation).
2. Remove the fuel injector soundproofing.
3. Drain the cooling system.
   For additional information, refer to: Cooling System Draining, Filling and Bleeding (303-03C Engine Cooling - 2.7L Diesel, General Procedures).
4. Remove the air cleaner.
   For additional information, refer to: Air Cleaner (303-12C Intake Air Distribution and Filtering - 2.7L Diesel, Removal and Installation).
5. Remove the power steering reservoir.
   For additional information, refer to: Power Steering Fluid Reservoir (211-02 Power Steering, Removal and Installation).
6. Remove the left-hand engine compartment cover.

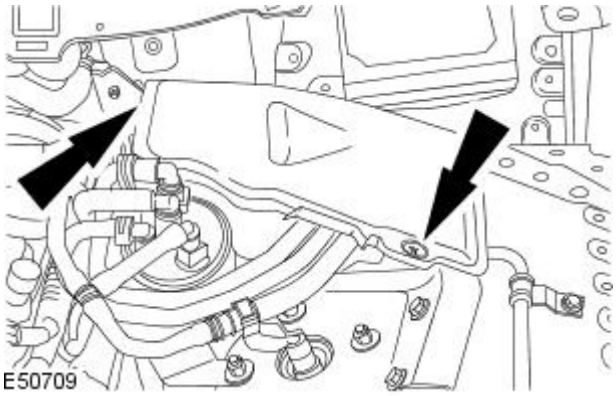


7. Detach the fuel filter from the mounting bracket.
   1. Press the retaining tang.
   2. Detach the fuel filter from the mounting bracket.

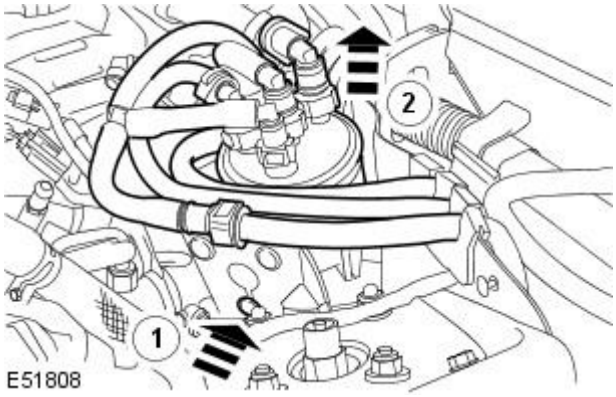


8. Remove the fuel filter retaining bracket.

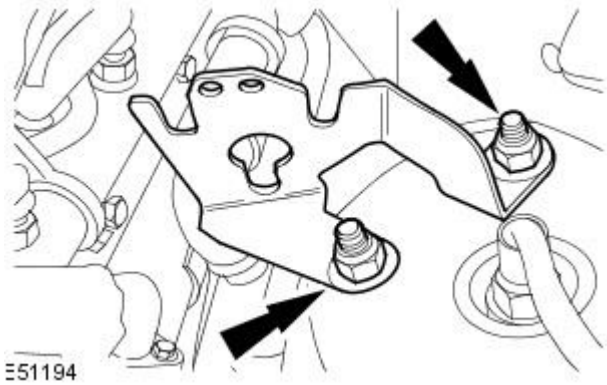


GETtheMANUALS.org

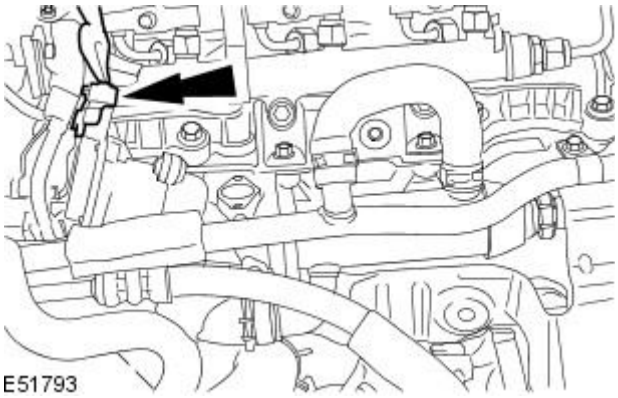


**9.** Disconnect the EGR valve electrical connector.

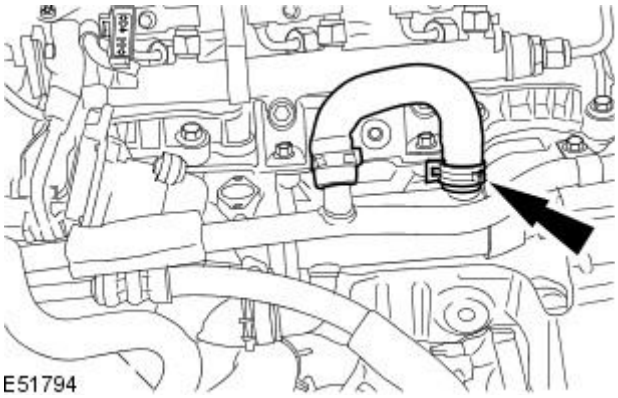


**10.** Disconnect the EGR valve coolant outlet hose.

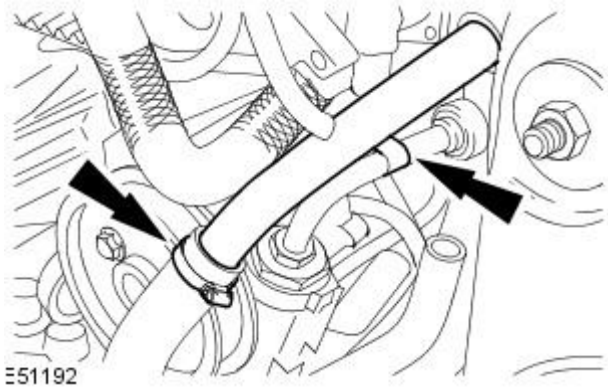


**11.** Detach the EGR valve cooler outlet tube.

- Disconnect the outlet hose.
- Detach the EGR valve cooler outlet tube retaining clip.

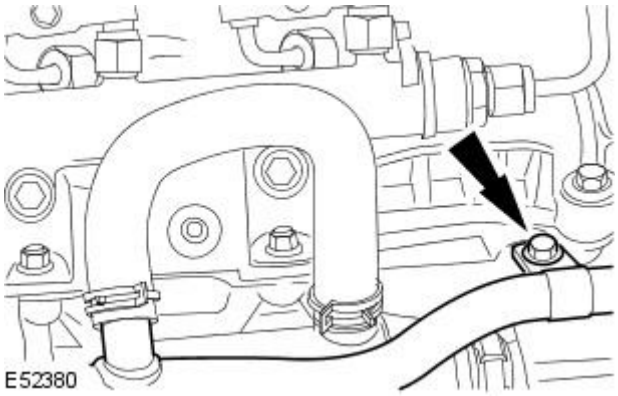


**12.** Detach the EGR valve cooler outlet tube from the EGR mounting bracket.

**13.** Remove the left-hand catalytic converter.
For additional information, refer to: Catalytic Converter - 2.7L Diesel (309-00 Exhaust System, Removal and Installation).

GETtheMANUALS.org

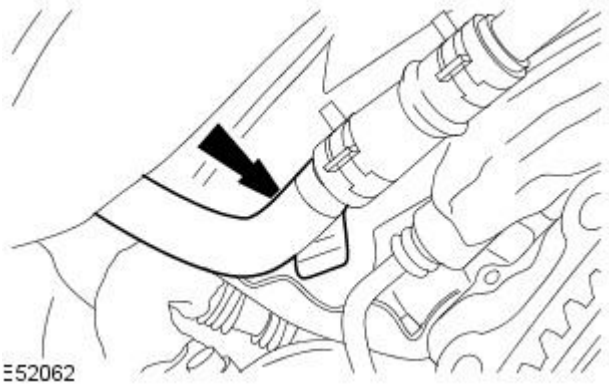


**14.** Detach the EGR valve coolant outlet tube.

- Reposition the tube.

**15.** Lower the vehicle.

**16.** Disconnect the EGR valve coolant intlet hose.

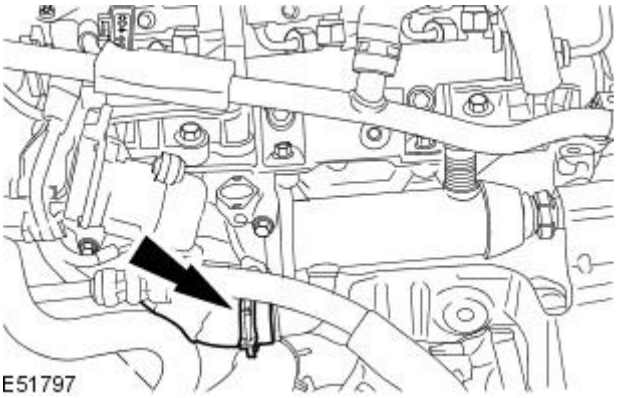


**17.** Detach the EGR valve inlet tube.

- Discard the gasket.

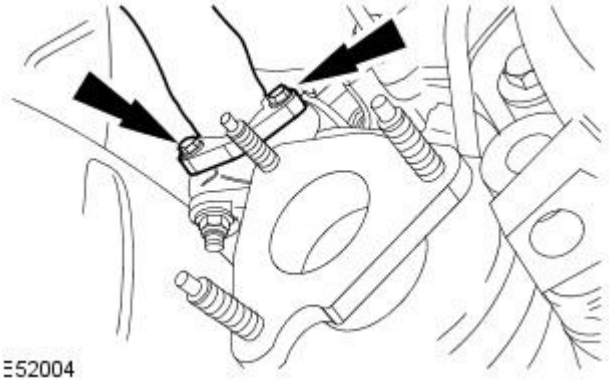


**18.** Remove the EGR valve inlet tube.

- Detach and discard the retaining clip.

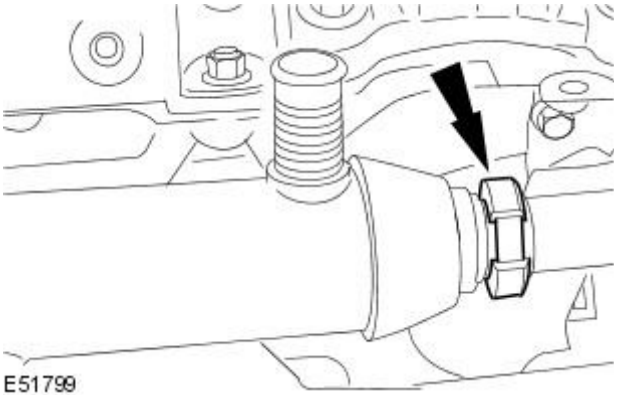


**19.** Remove the EGR valve.

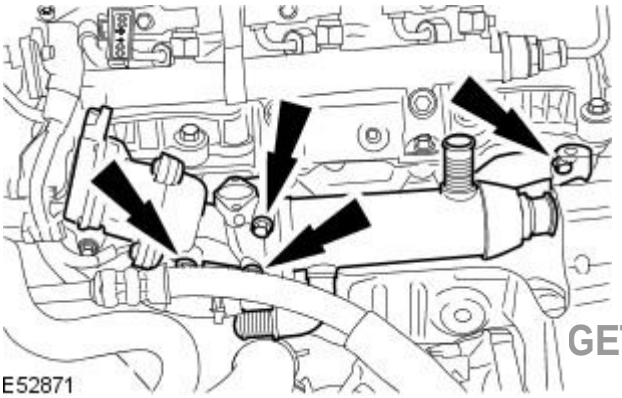


GETtheMANUALS.org

## Installation

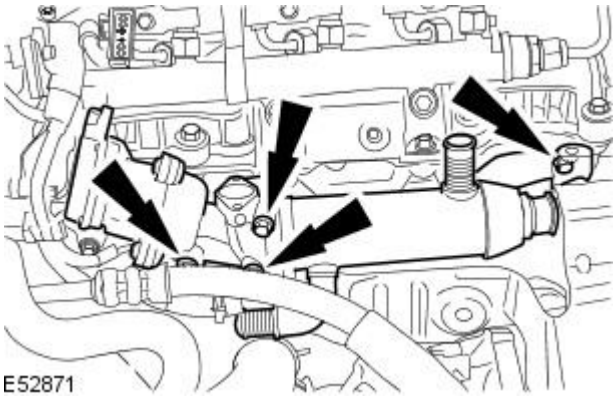


**1.** Loosely install the EGR valve.

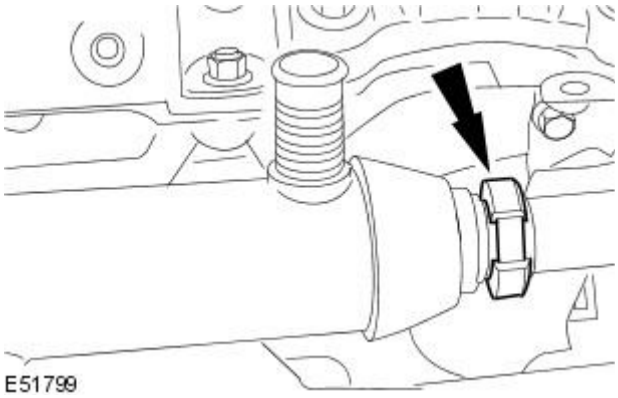


**2.** Install the EGR valve inlet tube.

- Install a new retaining clip.
- Do not fully close the retaining clip at this stage.

**3.** Raise the vehicle.

**4.** Install the EGR valve inlet tube retaining bolts.

- Install a new gasket
- Do not fully tighten the retaining bolts at this stage.

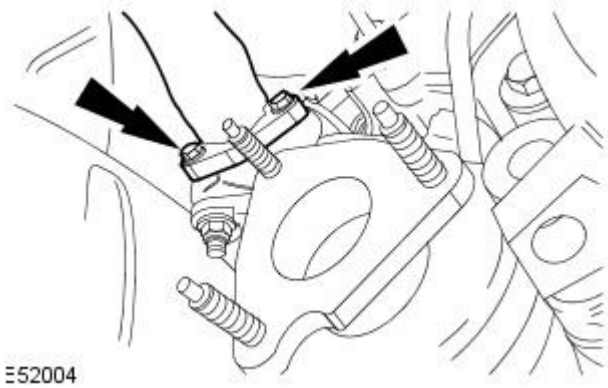


**5.** Lower the vehicle.

**6.** Fully close the EGR valve inlet tube retaining clip.

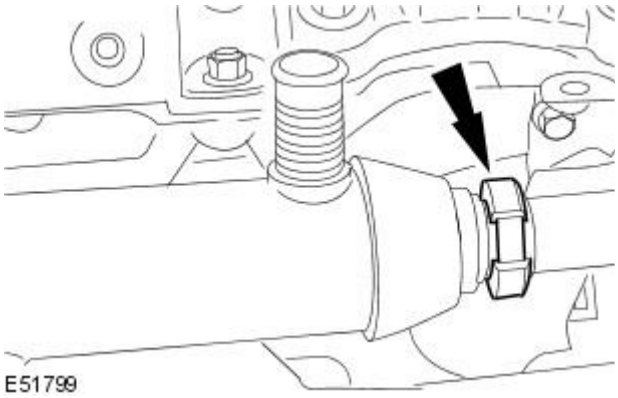


GETtheMANUALS.org

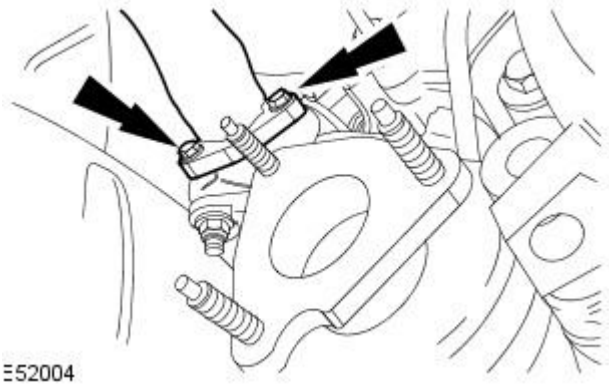


**7.** Tighten to 10 Nm.

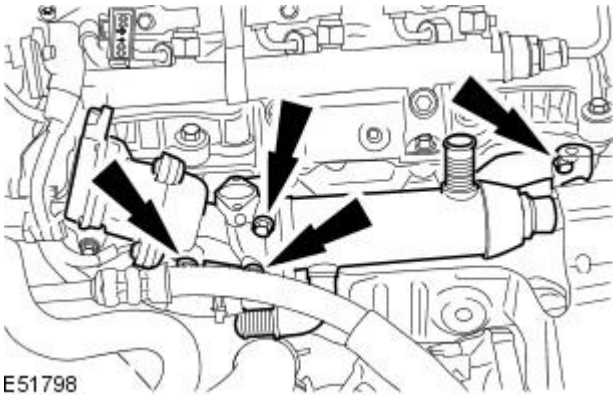


**8.** Tighten to 10 Nm.

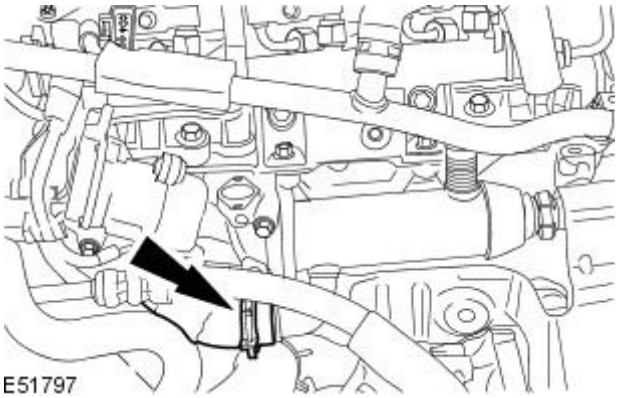


**9.** Connect the EGR valve coolant inlet hose.

**10.** Raise the vehicle.

**11.** Attach the EGR valve coolant outlet tube.

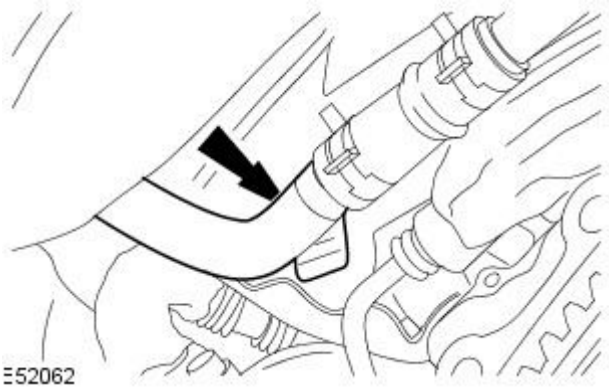


**12.** Install the left-hand catalytic converter.
For additional information, refer to: Catalytic Converter - 2.7L Diesel (309-00 Exhaust System, Removal and Installation).

**13.** Lower the vehicle.

GETtheMANUALS.org

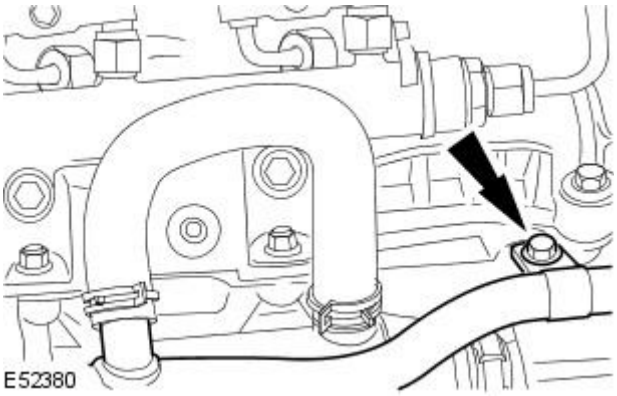


**14.** Attach the EGR valve cooler outlet tube to the EGR mounting bracket.

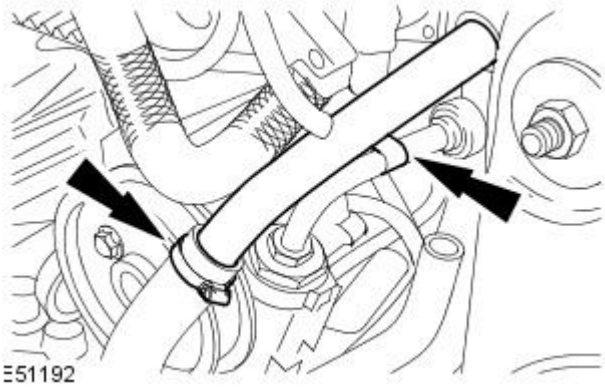


**15.** Attach the EGR valve cooler outlet tube.

- Connect the outlet hose.
- Attach the EGR valve cooler outlet tube retaining clip.

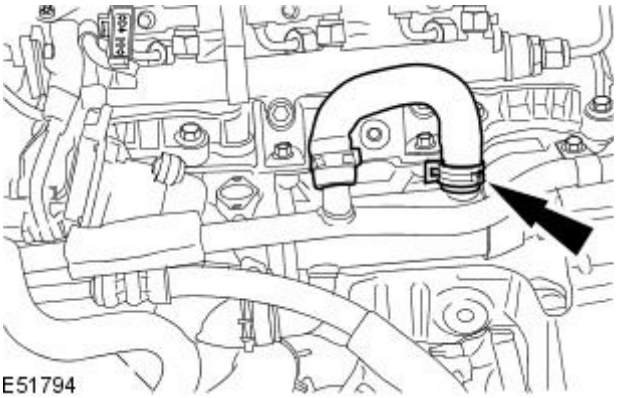


**16.** Connect the EGR valve coolant outlet hose.

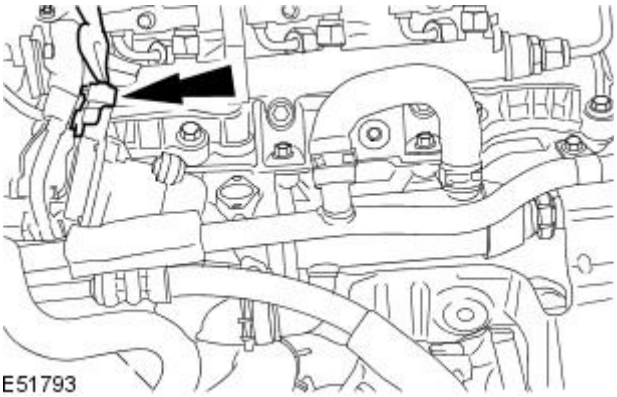


**17.** Connect the EGR valve electrical connector.

**18.** Install the fuel injector soundproofing.

**19.** Tighten to 27 Nm.

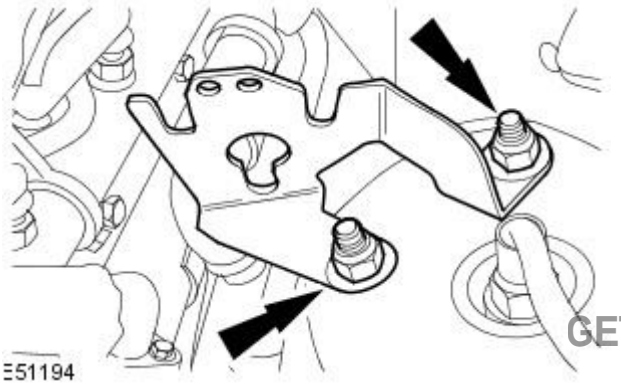


GETtheMANUALS.org

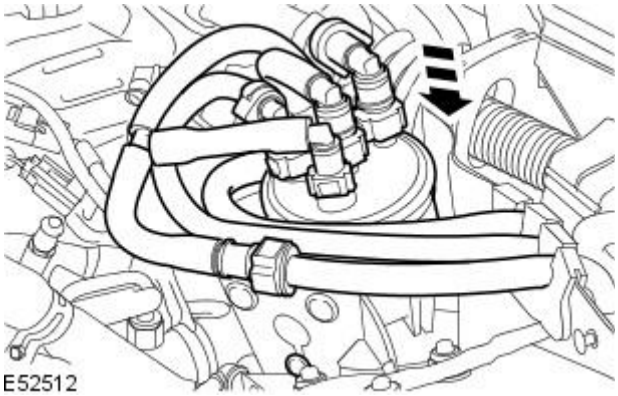


**20.** Attach the fuel filter.

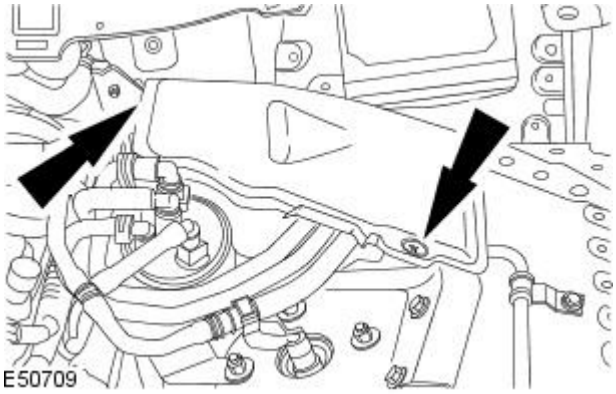


**21.** Install the left-hand engine compartment cover.

**22.** Install the power steering reservoir.
For additional information, refer to: Power Steering Fluid Reservoir (211-02 Power Steering, Removal and Installation).

**23.** Fill and bleed the cooling system.
For additional information, refer to: Cooling System Draining, Filling and Bleeding (303-03C Engine Cooling - 2.7L Diesel, General Procedures).

**24.** Install the air cleaner.
For additional information, refer to: Air Cleaner (303-12C Intake Air Distribution and Filtering - 2.7L Diesel, Removal and Installation).

**25.** Install the fuel injector soundproofing.

**26.** Install the exhaust gas recirculation (EGR) valve outlet tube.
For additional information, refer to: Exhaust Gas Recirculation (EGR) Valve Outlet Tube (303-08B Engine Emission Control - 2.7L Diesel, Removal and Installation).

GETtheMANUALS.org

# Engine Emission Control - 2.7L V6 - TdV6 - Exhaust Gas Recirculation (EGR) Valve Outlet Tube

Removal and Installation

## Removal

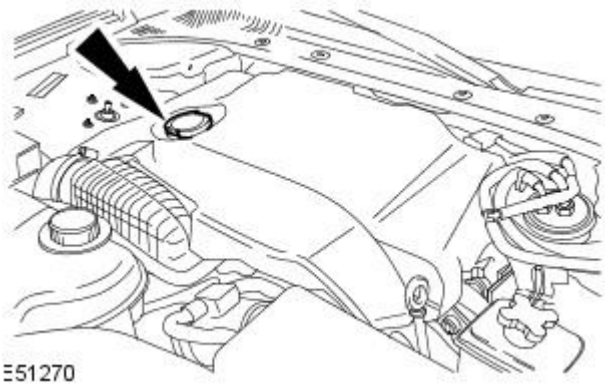


**1.** Remove the oil filler cap.

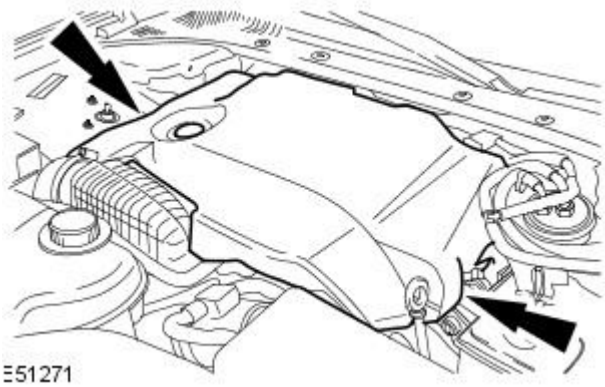


**2.** Remove the engine cover.

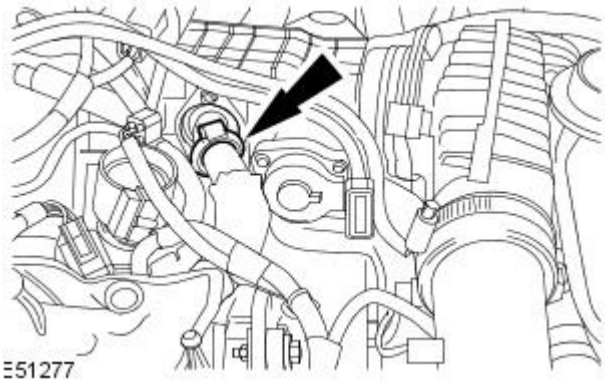


**3.** NOTE: Right-hand shown, left-hand similar.

Detach the exhaust gas recirculation (EGR) valve outlet tube.

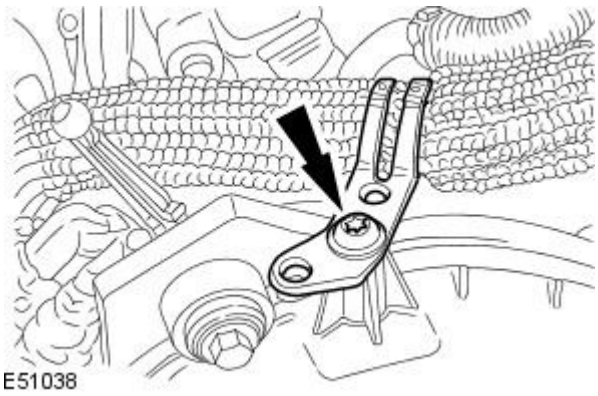


**4.** NOTE: Right-hand shown, left-hand similar.

Detach the EGR valve outlet tube.

GETtheMANUALS.org

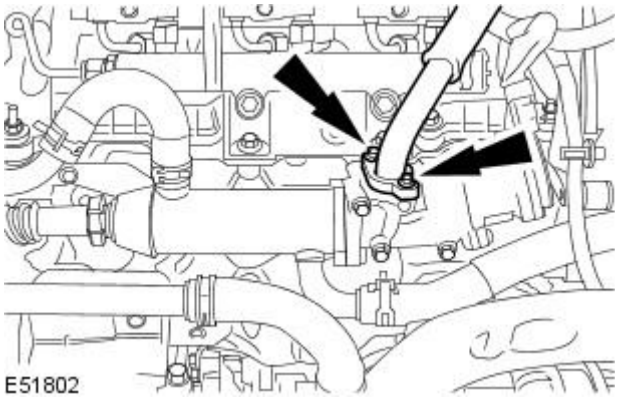


**5.** NOTE: Right-hand shown, left-hand similar.

Remove the EGR valve outlet tube.

- Discard the gasket.

## Installation

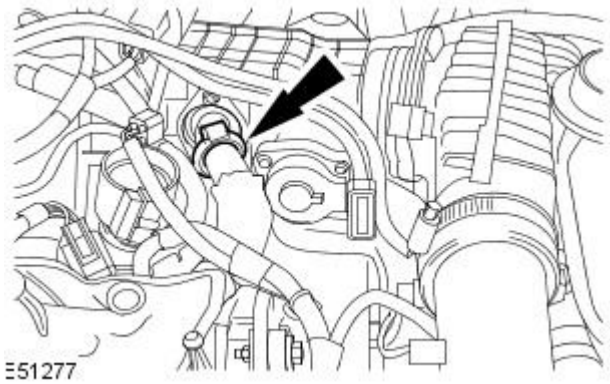


**1.** NOTE: Right-hand shown, left-hand similar.

Loosley install the EGR valve outlet tube.

- Install a new retaining clip.
- Do not fully close the retaining clip at this stage.

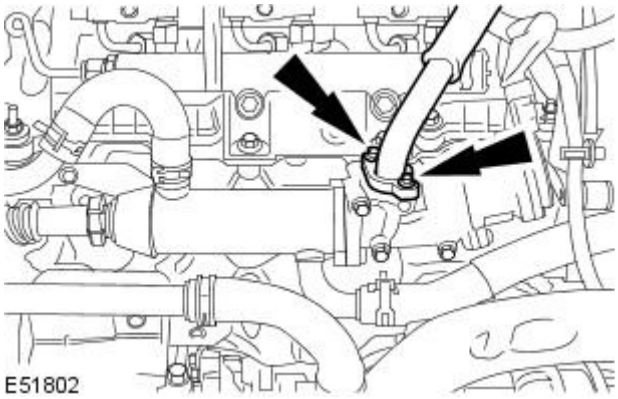


**2.** NOTE: Right-hand shown, left-hand similar.

Install the EGR valve outlet tube retaining bolts.

- Install a new gasket
- Do not fully tighten the retaining bolts at this stage.

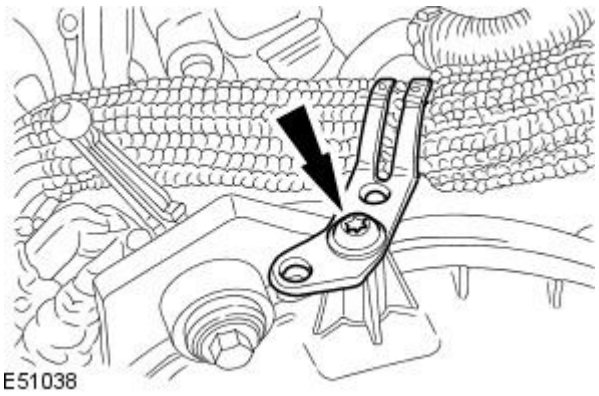


**3.** NOTE: Right-hand shown, left-hand similar.

Attach the EGR valve outlet tube.

- Do not fully tighten the retaining bolt at this stage.

GETtheMANUALS.org

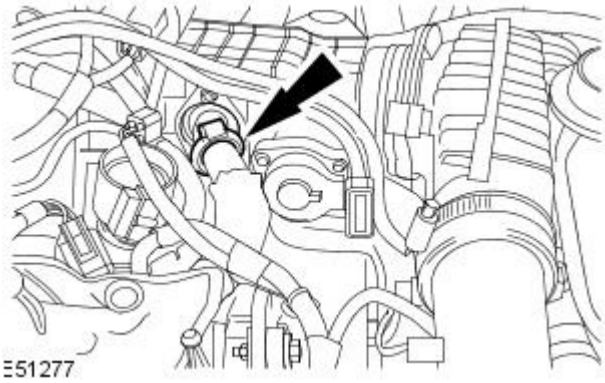


**4.** NOTE: Right-hand shown, left-hand similar.

Fully close the EGR valve outlet tube retaining clip.

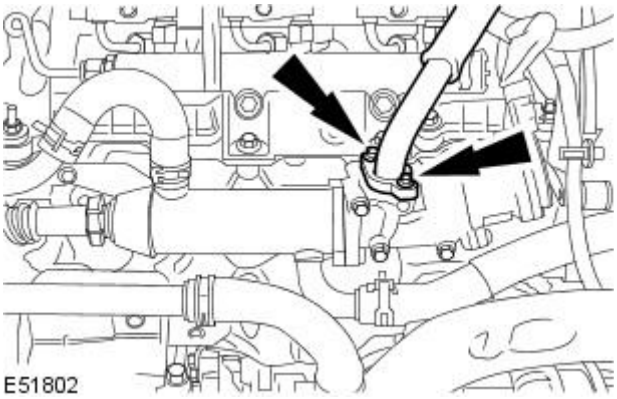


**5.** NOTE: Right-hand shown, left-hand similar.

Tighten to 10 Nm.

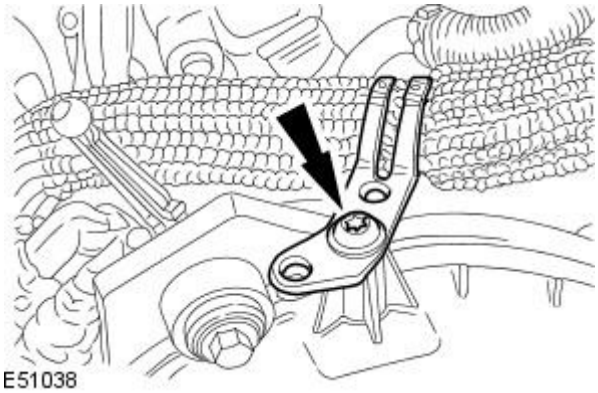


**6.** NOTE: Right-hand shown, left-hand similar.

Tighten to 5 Nm.

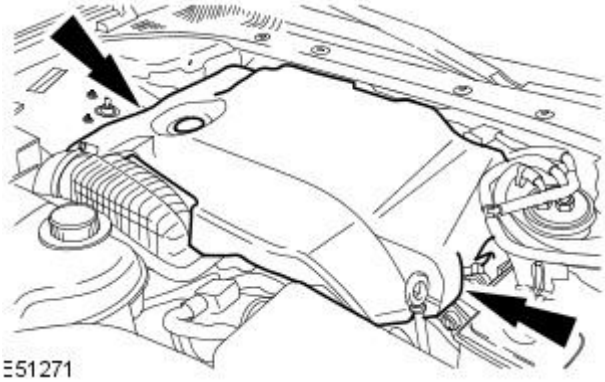


**7.** Install the engine cover.

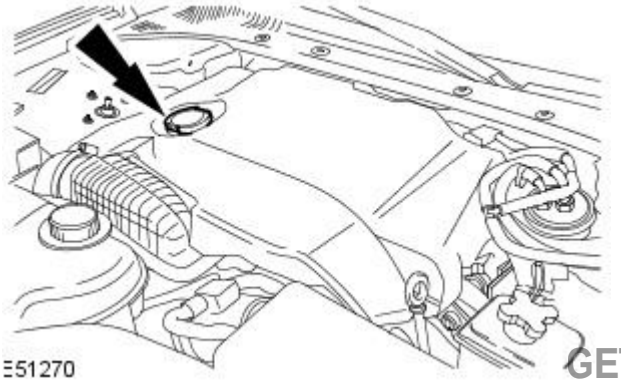


**8.** Install the oil filler cap.

GETtheMANUALS.org

GETtheMANUALS.org

# Engine Emission Control - 2.7L V6 - TdV6 - Exhaust Gas Recirculation (EGR) Valve RH

Removal and Installation

## Removal

1. Remove the exhaust gas recirculation (EGR) valve outlet tube.
   For additional information, refer to: Exhaust Gas Recirculation (EGR) Valve Outlet Tube (303-08B Engine Emission Control - 2.7L V6 - TdV6, Removal and Installation).
2. Remove the injector soundproofing.
3. Drain the cooling system.
   For additional information, refer to: Cooling System Draining, Filling and Bleeding (303-03C Engine Cooling - 2.7L V6 - TdV6, General Procedures).
4. Disconnect the EGR valve electrical connector.

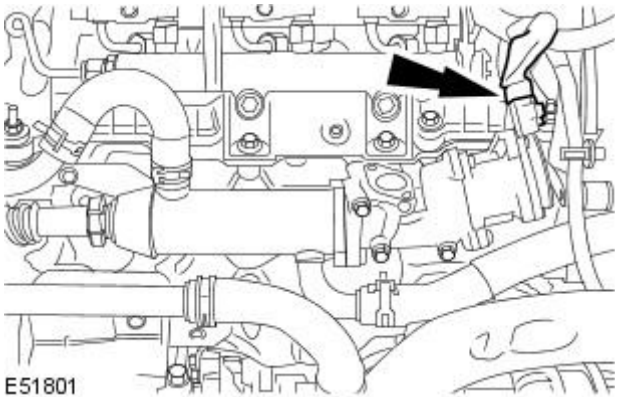


5. Disconnect the EGR valve coolant outlet hose.

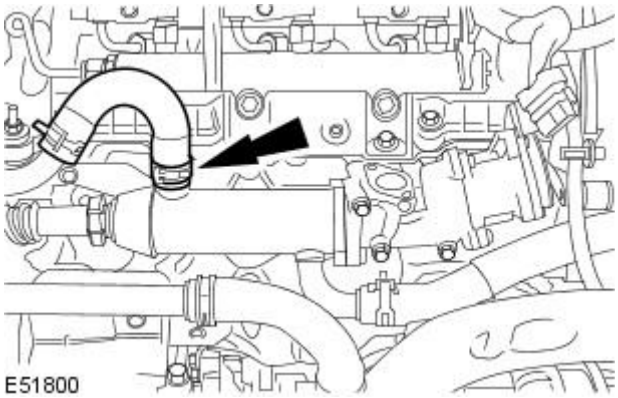


6. Disconnect the EGR valve coolant inlet hose.

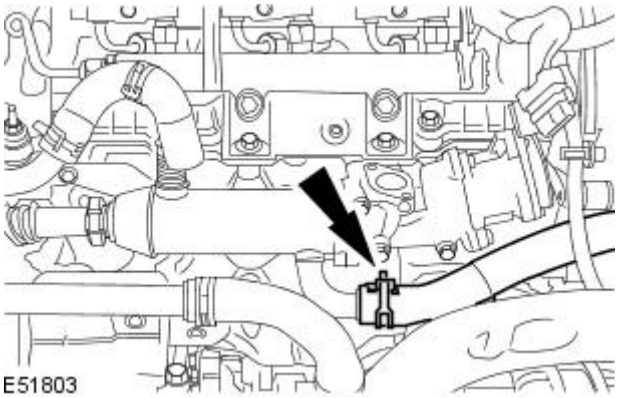


7. NOTE: Catalytic converter shown removed for clarity.

   Detach the EGR valve inlet tube retaining bolts.

   - Discard the gasket.

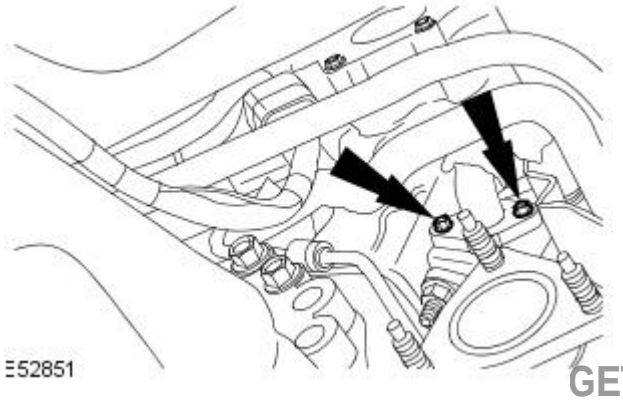


GETtheMANUALS.org

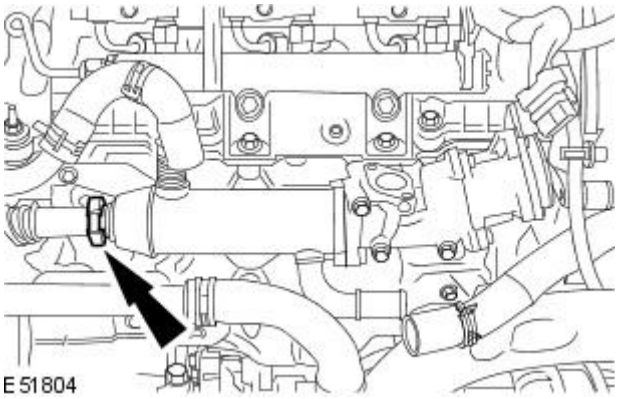


**8.** Remove the EGR valve inlet tube.

- Detach and discard the retaining clip.

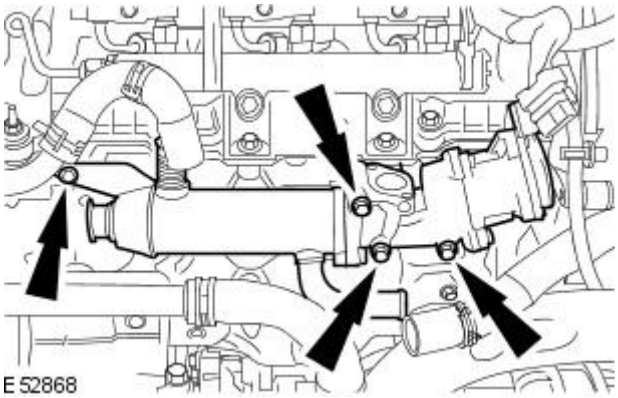


**9.** Remove the EGR valve.

## Installation

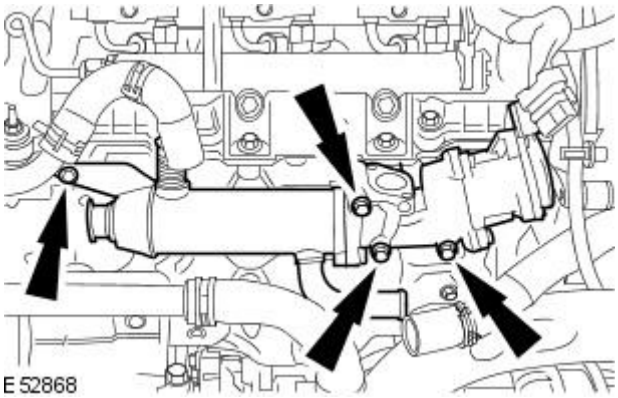


**1.** Loosley install the EGR valve.

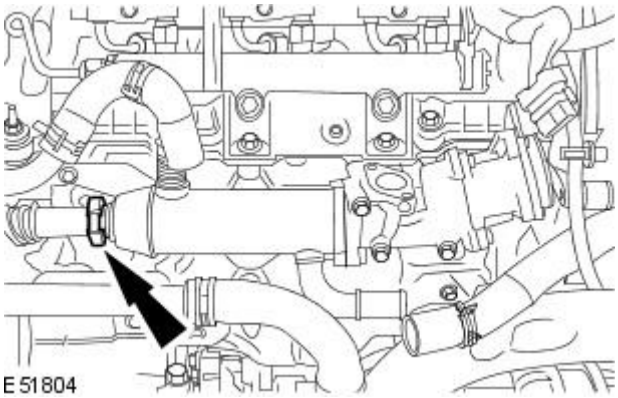


**2.** Install the EGR valve inlet tube.

- Install a new retaining clip.
- Do not fully close the retaining clip at this stage.

GETtheMANUALS.org

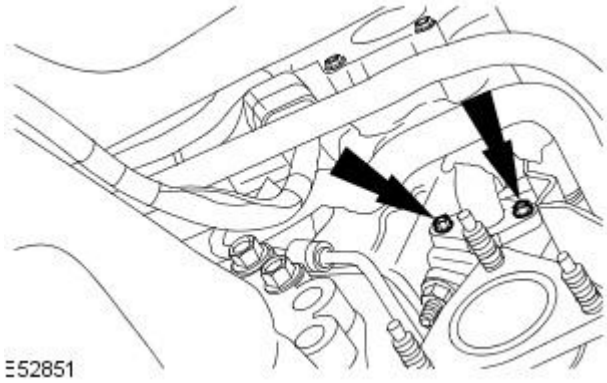


**3.** NOTE: Catalytic converter shown removed for clarity.

Install the EGR valve inlet tube retaining bolts.

- Install a new gasket
- Do not fully tighten the retaining bolts at this stage.

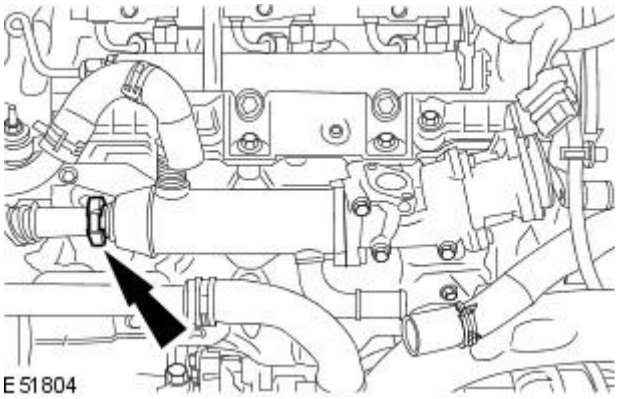


**4.** Fully close the EGR valve inlet tube retaining clip.

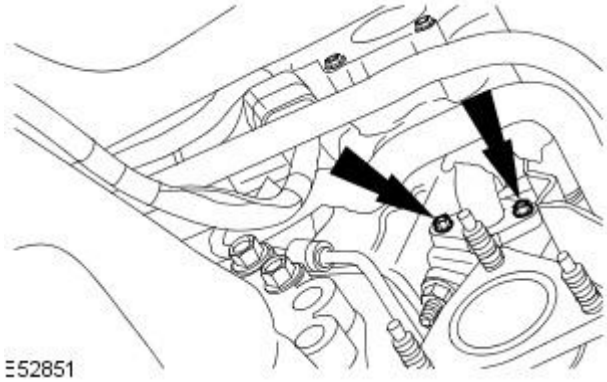


**5.** NOTE: Catalytic converter shown removed for clarity.

Tighten to 10 Nm.

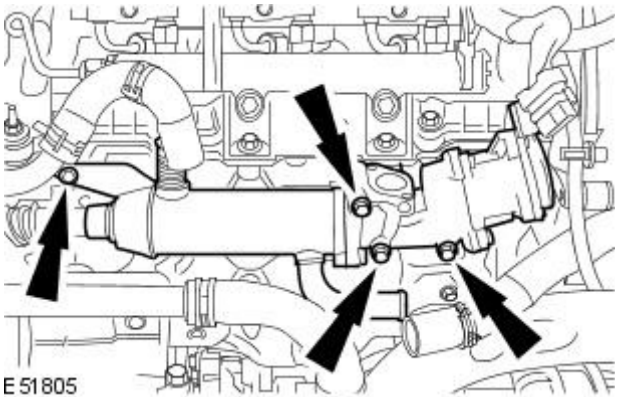


**6.** Tighten to 10 Nm.

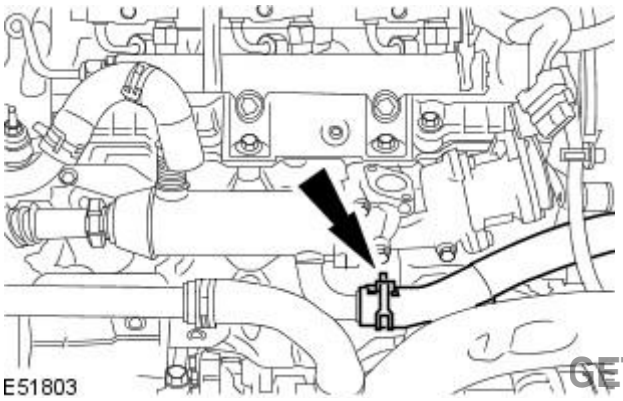


**7.** Connect the EGR valve coolant inlet hose.

GETtheMANUALS.org

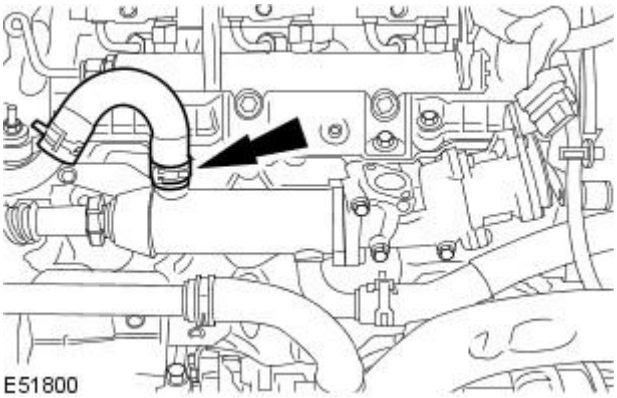


**8.** Connect the EGR valve coolant outlet hose.

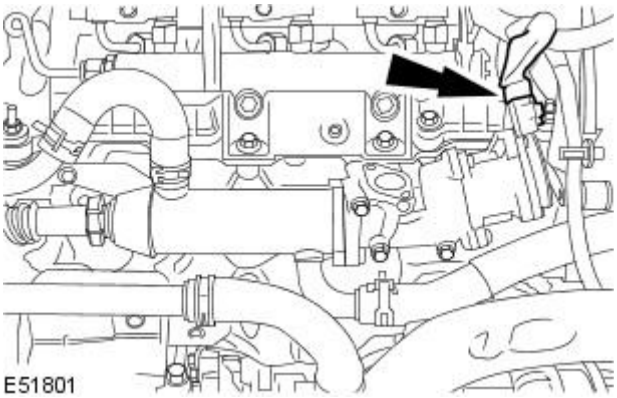


**9.** Connect the EGR valve electrical connector.

**10.** Install the fuel injector soundproofing.

**11.** Install the EGR valve outlet tube.
For additional information, refer to: Exhaust Gas Recirculation (EGR) Valve Outlet Tube (303-08B Engine Emission Control - 2.7L V6 - TdV6, Removal and Installation).

**12.** Fill and bleed the cooling system.
For additional information, refer to: Cooling System Draining, Filling and Bleeding (303-03C Engine Cooling - 2.7L V6 - TdV6, General Procedures).

GETtheMANUALS.org

# Intake Air Distribution and Filtering - 2.5L NA V6 - AJV6 / 3.0L NA V6 - AJ27 -

**Torque Specifications**

| Description | Nm | lb-ft | lb-in |
|---|---|---|---|
| Air cleaner | 8 | — | 71 |

GETtheMANUALS.org

# Intake Air Distribution and Filtering - 2.5L NA V6 - AJV6 / 3.0L NA V6 - AJ27 - Intake Air Distribution and Filtering

Description and Operation

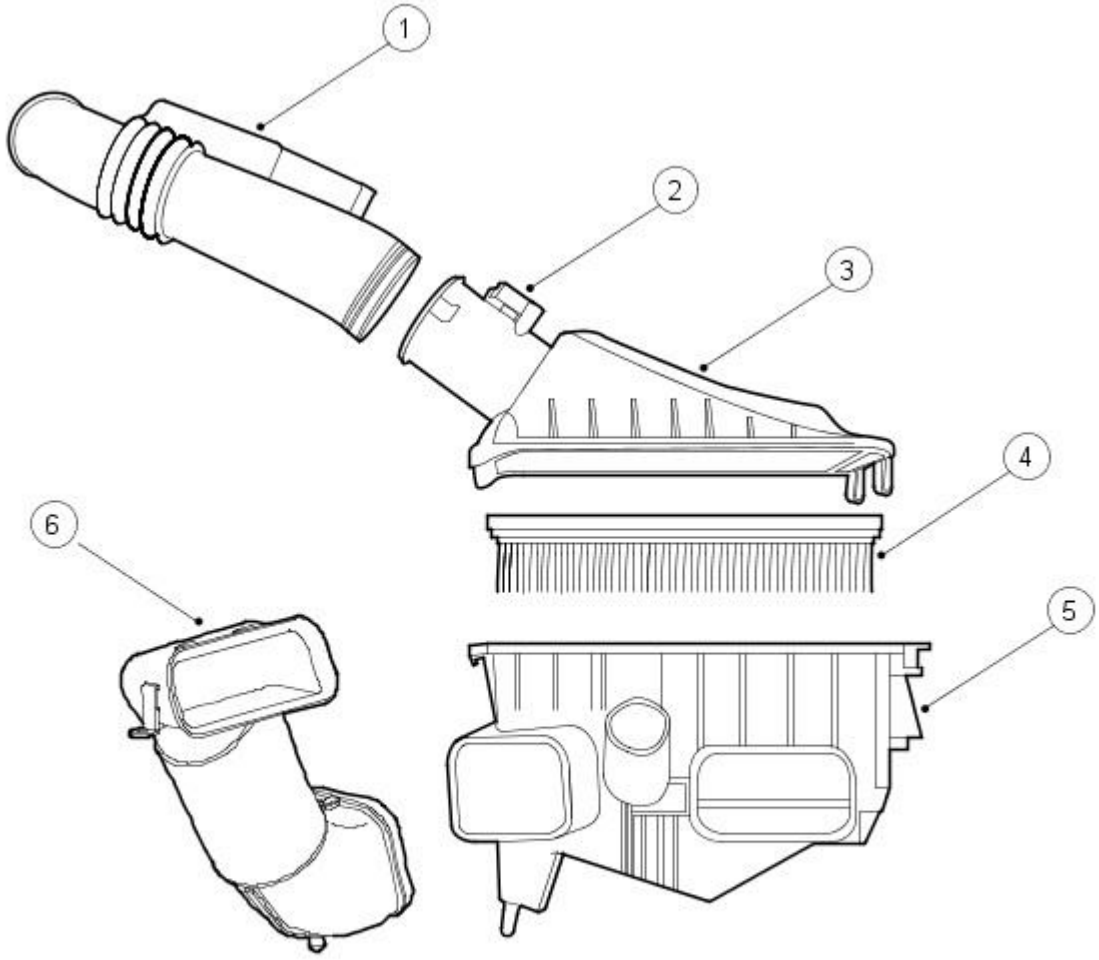


VUJ0005392

| Item | Part Number | Description |
|---|---|---|
| 1 | — | Air cleaner outlet pipe |
| 2 | — | Mass air flow (MAF) sensor |
| 3 | — | Air cleaner cover |
| 4 | — | Air cleaner element |
| 5 | — | Air cleaner |
| 6 | — | Air cleaner intake pipe |

GETtheMANUALS.org

# Intake Air Distribution and Filtering - 2.5L NA V6 - AJV6 / 3.0L NA V6 - AJ27 - Intake Air Distribution and FilteringVIN Range: M45255->N13088

Diagnosis and Testing

## Inspection and Verification

1. **1.** Verify the customer concern.
2. **2.** Visually inspect for obvious signs of mechanical damage.

**Visual Inspection Chart**

| Mechanical |
|---|
| Air cleaner intake pipe |
| Air cleaner outlet pipe |
| Air cleaner element |

3. **3.** If an obvious cause for an observed or reported concern is found, correct the cause (if possible) before proceeding to the next step.
4. **4.** If the cause is not visually evident, verify the symptom and refer to the Jaguar Approved Diagnostic System.

GETtheMANUALS.org

# Intake Air Distribution and Filtering - 2.5L NA V6 - AJV6 / 3.0L NA V6 - AJ27 - Intake Air Distribution and FilteringVIN Range: N13089->N52047

Diagnosis and Testing

## Inspection and Verification

1. **1.** Verify the customer concern.
2. **2.** Visually inspect for obvious signs of damage.

**Visual inspection chart**

| Mechanical | Electrical |
|---|---|
| • Hoses and ducts (damage/connections)<br>• Air cleaner element (contaminated/blocked)<br>• Restricted air intake | • Mass air flow (MAF) sensor<br>REFER to: Electronic Engine Controls - VIN Range: N80181->R99999 (303-14A Electronic Engine Controls - 2.5L NA V6 - AJV6/3.0L NA V6 - AJ27, Diagnosis and Testing).<br>• Harness (security/damage)<br>• Connections (security/damage) |

## Symptom chart

| Symptom | Possible cause | Action |
|---|---|---|
| Vehicle does not start/hard starting/poor performance | • Restricted/blocked air intake<br>• Restricted/blocked air cleaner element | Clear the restriction,<br>REFER to: Air Cleaner (303-12A Intake Air Distribution and Filtering - 2.5L NA V6 - AJV6/3.0L NA V6 - AJ27, Removal and Installation).<br>Replace the air cleaner element as necessary,<br>REFER to: Air Cleaner Element (303-12A Intake Air Distribution and Filtering - 2.5L NA V6 - AJV6/3.0L NA V6 - AJ27, Removal and Installation). |
| Excessive intake noise | • Intake pipe disconnected/damaged after the air cleaner<br>• Air cleaner assembly incorrectly assembled/damaged | Check the intake system and hoses for correct installation/damage,<br>REFER to: Air Cleaner (303-12A Intake Air Distribution and Filtering - 2.5L NA V6 - AJV6/3.0L NA V6 - AJ27, Removal and Installation). |

GETtheMANUALS.org

# Intake Air Distribution and Filtering - 2.5L NA V6 - AJV6 / 3.0L NA V6 - AJ27 - Intake Air Distribution and FilteringVIN Range: N52048->N99999

Diagnosis and Testing

## Overview

There are changes to the engine management system (EMS) for 2006 my, the most obvious of which will be the change to 7-digit diagnostic trouble codes (DTCs) from the familiar 5-digit, plus the addition of secondary air injection and changes to evaporative emissions and exhaust gas recirculation to comply with stage four emissions requirements.

For more information on these systems,
REFER to: Engine Emission Control - VIN Range: N52048->N99999 (303-08A Engine Emission Control - V8 4.2L Petrol/V8 S/C 4.2L Petrol/2.5L NA V6 - AJV6/3.0L NA V6 - AJ27, Description and Operation) /
Evaporative Emissions - VIN Range: N52048->N99999 (303-13 Evaporative Emissions, Description and Operation).

## Inspection and Verification

1. **1.** Verify the customer concern.
2. **2.** Visually inspect for obvious signs of damage.

**Visual inspection chart**

| Mechanical | Electrical |
|---|---|
| • Hoses and ducts (damage/connections)<br>• Air cleaner element (contaminated/blocked)<br>• Restricted air intake<br>• Seals and gaskets | • Mass air flow (MAF) sensor<br>• Manifold absolute pressure (MAP) sensor<br>• Throttle body<br>• Harness (security/damage)<br>• Connections (security/damage)<br>• Intake manifold tuning (IMT) valves |

3. **3.** If an obvious cause for an observed or reported concern is found, correct the cause (if possible) before proceeding to the next step.
4. **4.** If the cause is not visually evident use the Jaguar approved diagnostic system or a scan tool to retrieve the fault codes before proceeding to the DTC Index.

## Symptom chart

| Symptom | Possible cause | Action |
|---|---|---|
| Vehicle does not start/hard starting/poor performance | • Restricted/blocked air intake<br>• Restricted/blocked air cleaner element | Clear the restriction,<br>REFER to: Air Cleaner (303-12A Intake Air Distribution and Filtering - 2.5L NA V6 - AJV6/3.0L NA V6 - AJ27, Removal and Installation).<br>Replace the air cleaner element as necessary,<br>REFER to: Air Cleaner Element (303-12A Intake Air Distribution and Filtering - 2.5L NA V6 - AJV6/3.0L NA V6 - AJ27, Removal and Installation). |
| Excessive intake noise | • Intake pipe disconnected/damaged after the air cleaner<br>• Air cleaner assembly incorrectly assembled/damaged | Check the intake system and hoses for correct installation/damage,<br>REFER to: Air Cleaner (303-12A Intake Air Distribution and Filtering - 2.5L NA V6 - AJV6/3.0L NA V6 - AJ27, Removal and Installation). |

## DTC index

• NOTE: Generic scan tools may not read the codes listed, or may read only 5-digit codes. Match the 5 digits from the scan tool to the first 5 digits of the 7-digit code listed to identify the fault (the last 2 digits give extra information read by the manufacturer-approved diagnostic system).

| DTC | Description | Possible causes | Action |
|---|---|---|---|
| P010100 | MAF sensor circuit range/performance | • Blocked air cleaner<br>• Air intake leak<br>• Engine breather leak<br>• MAF sensor to ECM sensing circuit: high resistance, intermittent short circuit to ground<br>• MAF sensor supply circuit: high resistance | Clear the restriction,<br>REFER to: Air Cleaner (303-12A Intake Air Distribution and Filtering - 2.5L NA V6 - AJV6/3.0L NA V6 - AJ27, Removal and Installation).<br>Replace the air cleaner element as necessary,<br>REFER to: Air Cleaner Element (303-12A Intake Air Distribution and Filtering - 2.5L NA V6 - AJV6/3.0L NA V6 - AJ27, Removal and Installation).<br>Inspect the engine breather system,<br>REFER to: Engine Emission Control - VIN Range: N80181->R99999 (303-08A Engine Emission Control - V8 4.2L Petrol/V8 S/C 4.2L Petrol/2.5L NA V6 - AJV6/3.0L NA V6 - AJ27, Diagnosis and Testing).<br>For MAF sensor tests,<br>REFER to: Electronic Engine Controls - VIN Range: N80181->R99999 (303-14A Electronic Engine Controls - 2.5L NA V6 - AJV6/3.0L NA V6 - AJ27, Diagnosis and Testing).<br>. |
| P010600 | MAP/barometric pressure circuit range/performance | • Intake manifold air leak (loose or missing component)<br>• MAP sensor to ECM circuit(s) fault<br>• MAP sensor failure | Check the intake system and hoses for correct installation/damage,<br>REFER to: Air Cleaner (303-12A Intake Air Distribution and Filtering - 2.5L NA V6 - AJV6/3.0L NA V6 - AJ27, Removal and Installation).<br>Replace the air cleaner element as necessary,<br>REFER to: Air Cleaner Element (303-12A Intake Air Distribution and Filtering - 2.5L NA V6 - AJV6/3.0L NA V6 - AJ27, Removal and Installation).<br>Check the intake manifold for correct installation/damage, |

GETtheMANUALS.org

| DTC | Description | Possible causes | Action |
|---|---|---|---|
| | | | REFER to: Intake Manifold (303-01A Engine - 2.5L NA V6 - AJV6/3.0L NA V6 - AJ27, In-vehicle Repair).<br>For MAP sensor tests,<br>REFER to: Electronic Engine Controls - VIN Range: N80181->R99999 (303-14A Electronic Engine Controls - 2.5L NA V6 - AJV6/3.0L NA V6 - AJ27, Diagnosis and Testing).<br>. |
| P017100 | System too lean (right hand bank) | • Air intake leak between MAF sensor and cylinder head<br>• Fuel filter/system restriction<br>• MAF sensor fault (low intake air flow)<br>• Exhaust leak (before catalyst) | Check the intake system and hoses for correct installation/damage,<br>REFER to: Air Cleaner (303-12A Intake Air Distribution and Filtering - 2.5L NA V6 - AJV6/3.0L NA V6 - AJ27, Removal and Installation).<br>Check the fuel pressure, check the fuel lines,<br>REFER to: Fuel Tank and Lines - V8 4.2L Petrol/V8 S/C 4.2L Petrol/2.5L NA V6 - AJV6/3.0L NA V6 - AJ27, VIN Range: N80181->R99999 (310-01 Fuel Tank and Lines, Diagnosis and Testing).<br>Check the exhaust system (before catalyst) for condition and security,<br>REFER to: Exhaust System - VIN Range: N13089->N99999 (309-00 Exhaust System, Diagnosis and Testing). |
| P017200 | System too rich (right hand bank) | • Restricted air filter<br>• MAF sensor fault (high intake air flow) | Clear the restriction,<br>REFER to: Air Cleaner (303-12A Intake Air Distribution and Filtering - 2.5L NA V6 - AJV6/3.0L NA V6 - AJ27, Removal and Installation).<br>Replace the air cleaner element as necessary,<br>REFER to: Air Cleaner Element (303-12A Intake Air Distribution and Filtering - 2.5L NA V6 - AJV6/3.0L NA V6 - AJ27, Removal and Installation).<br>For MAF sensor tests,<br>REFER to: Electronic Engine Controls - VIN Range: N80181->R99999 (303-14A Electronic Engine Controls - 2.5L NA V6 - AJV6/3.0L NA V6 - AJ27, Diagnosis and Testing).<br>. |
| P017400 | System too lean (left hand bank) | • Air intake leak between MAF sensor and cylinder head<br>• Fuel filter/system restriction<br>• MAF sensor fault (low intake air flow)<br>• Exhaust leak (before catalyst) | Check the intake system and hoses for correct installation/damage,<br>REFER to: Air Cleaner (303-12A Intake Air Distribution and Filtering - 2.5L NA V6 - AJV6/3.0L NA V6 - AJ27, Removal and Installation).<br>Check the fuel pressure, check the fuel lines,<br>REFER to: Fuel Tank and Lines - V8 4.2L Petrol/V8 S/C 4.2L Petrol/2.5L NA V6 - AJV6/3.0L NA V6 - AJ27, VIN Range: N80181->R99999 (310-01 Fuel Tank and Lines, Diagnosis and Testing).<br>Check the exhaust system (before catalyst) for condition and security,<br>REFER to: Exhaust System - VIN Range: N13089->N99999 (309-00 Exhaust System, Diagnosis and Testing). |
| P017500 | System too rich (left hand bank) | • Restricted air filter<br>• MAF sensor fault (high intake air flow) | Clear the restriction,<br>REFER to: Air Cleaner (303-12A Intake Air Distribution and Filtering - 2.5L NA V6 - AJV6/3.0L NA V6 - AJ27, Removal and Installation).<br>Replace the air cleaner element as necessary,<br>REFER to: Air Cleaner Element (303-12A Intake Air Distribution and Filtering - 2.5L NA V6 - AJV6/3.0L NA V6 - AJ27, Removal and Installation).<br>For MAF sensor tests,<br>REFER to: Electronic Engine Controls - VIN Range: N80181->R99999 (303-14A Electronic Engine Controls - 2.5L NA V6 - AJV6/3.0L NA V6 - AJ27, Diagnosis and Testing).<br>. |
| P050600 | Idle air control system RPM lower than expected | • Restricted air cleaner element<br>• MAF sensor fault (high intake air flow) | Clear the restriction,<br>REFER to: Air Cleaner (303-12A Intake Air Distribution and Filtering - 2.5L NA V6 - AJV6/3.0L NA V6 - AJ27, Removal and Installation).<br>Replace the air cleaner element as necessary,<br>REFER to: Air Cleaner Element (303-12A Intake Air Distribution and Filtering - 2.5L NA V6 - AJV6/3.0L NA V6 - AJ27, Removal and Installation).<br>For MAF sensor tests,<br>REFER to: Electronic Engine Controls - VIN Range: N80181->R99999 (303-14A Electronic Engine Controls - 2.5L NA V6 - AJV6/3.0L NA V6 - AJ27, Diagnosis and Testing).<br>. |
| P050700 | Idle air control system RPM higher than expected | • Intake air leak between MAF sensor and throttle<br>• Intake air leak between throttle and engine<br>• Engine crankcase breather leak | Check the intake system and hoses for correct installation/damage,<br>REFER to: Air Cleaner (303-12A Intake Air Distribution and Filtering - 2.5L NA V6 - AJV6/3.0L NA V6 - AJ27, Removal and Installation).<br>Inspect the engine breather system,<br>REFER to: Engine Emission Control - VIN Range: N80181->R99999 (303-08A Engine Emission Control - V8 4.2L Petrol/V8 S/C 4.2L Petrol/2.5L NA V6 - AJV6/3.0L NA V6 - AJ27, Diagnosis and Testing). |
| P066100 | IMT valve control circuit low - right hand | • IMT circuit(s): short circuit to ground<br>• IMT circuit(s): high resistance | REFER to: Electronic Engine Controls - VIN Range: N80181->R99999 (303-14A Electronic Engine Controls - 2.5L NA V6 - AJV6/3.0L NA V6 - AJ27, Diagnosis and Testing). |
| P066200 | IMT valve control circuit high - right hand | • IMT circuit(s): short circuit to power | REFER to: Electronic Engine Controls - VIN Range: N80181->R99999 (303-14A Electronic Engine Controls - 2.5L NA V6 - AJV6/3.0L NA V6 - AJ27, Diagnosis and Testing). |

GETthemANUALS.com

| DTC | Description | Possible causes | Action |
|---|---|---|---|
| P066400 | IMT valve control circuit low - left hand | • IMT circuit(s): short circuit to ground<br>• IMT circuit(s): high resistance | REFER to: Electronic Engine Controls - VIN Range: N80181->R99999 (303-14A Electronic Engine Controls - 2.5L NA V6 - AJV6/3.0L NA V6 - AJ27, Diagnosis and Testing). |
| P066500 | IMT valve control circuit high - left hand | • IMT circuit(s): short circuit to power | REFER to: Electronic Engine Controls - VIN Range: N80181->R99999 (303-14A Electronic Engine Controls - 2.5L NA V6 - AJV6/3.0L NA V6 - AJ27, Diagnosis and Testing). |

GETtheMANUALS.org

# Intake Air Distribution and Filtering - 2.5L NA V6 - AJV6 / 3.0L NA V6 - AJ27 - Air Cleaner

Removal and Installation

## Removal

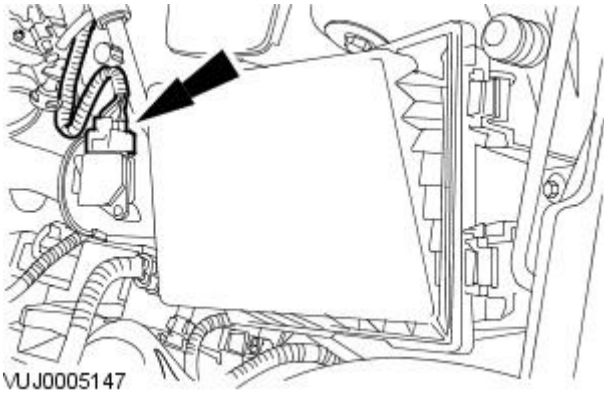


1. Remove the air cleaner outlet pipe.
   For additional information, refer to Air Cleaner Outlet Pipe in this section.
2. Disconnect the mass air flow (MAF) sensor electrical connector.

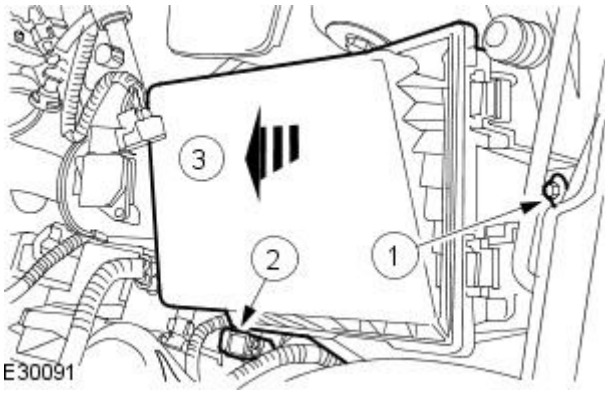


3. Remove the radiator grill opening panel.
   For additional information, refer to Section 501-02 Front End Body Panels.
4. Remove the air cleaner.
   1. Remove the air cleaner retaining bolt.
   2. Disconnect the extra air flap actuator electrical connector.
   3. Remove the air cleaner.

## Installation

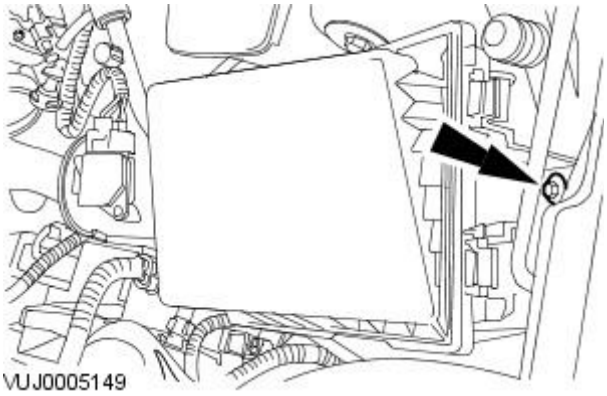


1. NOTE: When installing the air cleaner, make sure the locating pegs fit securely in the grommets located in the inner wing.

   To install, reverse the removal procedure.

   - Tighten to 8Nm.

GETtheMANUALS.org

# Intake Air Distribution and Filtering - 2.5L NA V6 - AJV6 / 3.0L NA V6 - AJ27 - Air Cleaner Element

Removal and Installation

## Removal

1. Remove the air cleaner outlet pipe.
   For additional information, refer to Air Cleaner Outlet Pipe in this section.
2. Disconnect the mass air flow sensor (MAF) electrical connector.

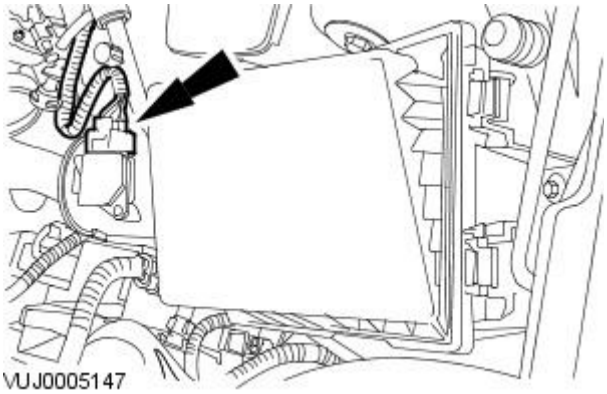


3. Remove the air cleaner cover.
   1. Release the retaining clips.
   2. Remove the air cleaner cover.

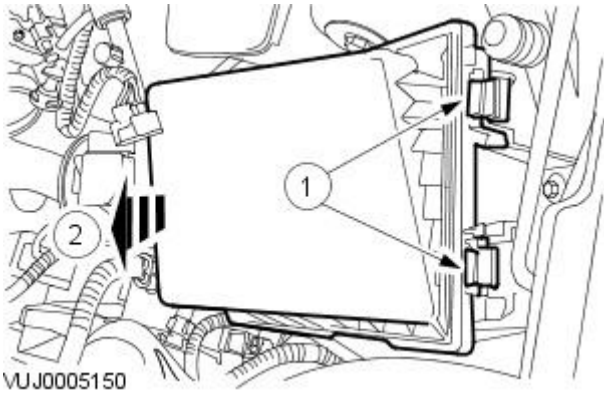


4. Remove the air cleaner element.

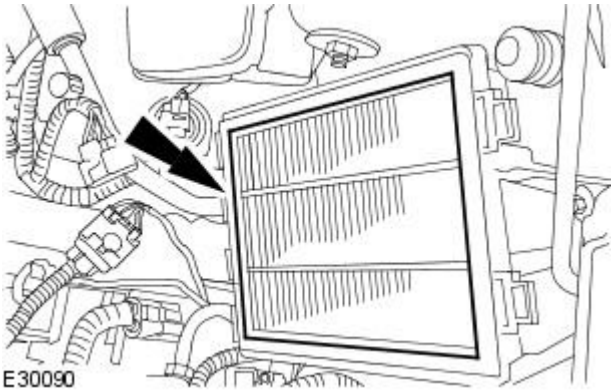


## Installation

1. To install, reverse the removal procedure.

GETtheMANUALS.org

# Intake Air Distribution and Filtering - 2.5L NA V6 - AJV6 / 3.0L NA V6 - AJ27 - Air Cleaner Outlet PipeVIN Range: M45255->N52047

Removal and Installation

## Removal

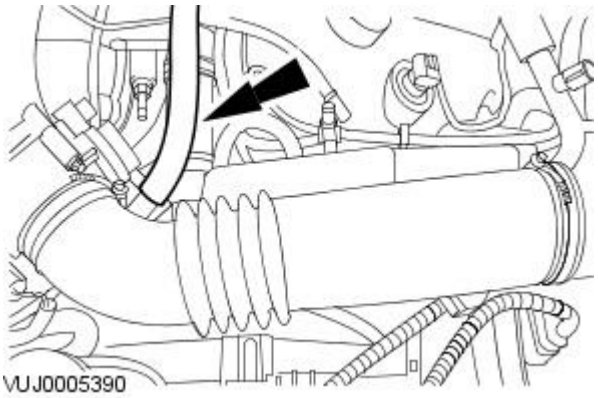


**1.** Disconnect the engine breather hose.

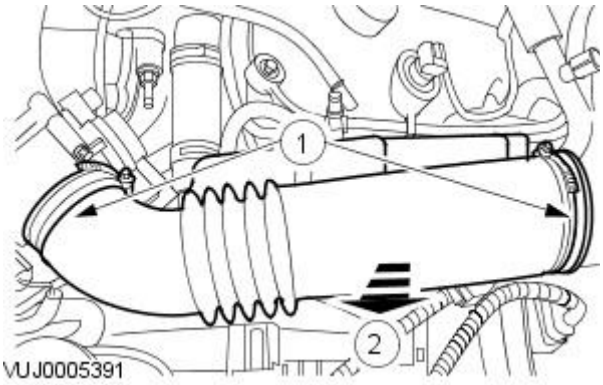


**2.** Remove the air cleaner outlet pipe.

1. Loosen the retaining clips.
2. Remove the air cleaner outlet pipe.

## Installation

**1.** To install, reverse the removal procedure.

GETtheMANUALS.org

# Intake Air Distribution and Filtering - 2.5L NA V6 - AJV6 / 3.0L NA V6 - AJ27 - Air Cleaner Outlet PipeVIN Range: N52048->N99999

Removal and Installation

## Removal

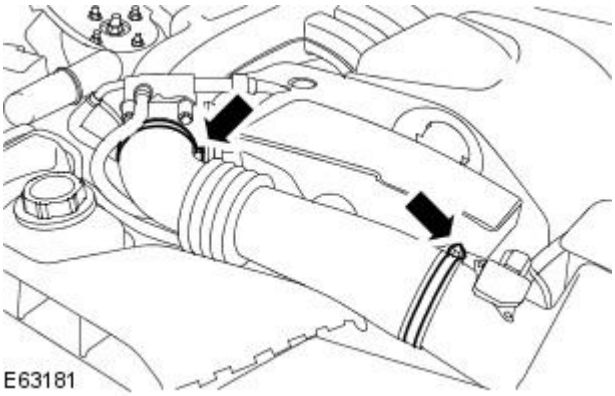


**1.** Detach the air cleaner outlet pipe.

- Loosen the retaining clips.

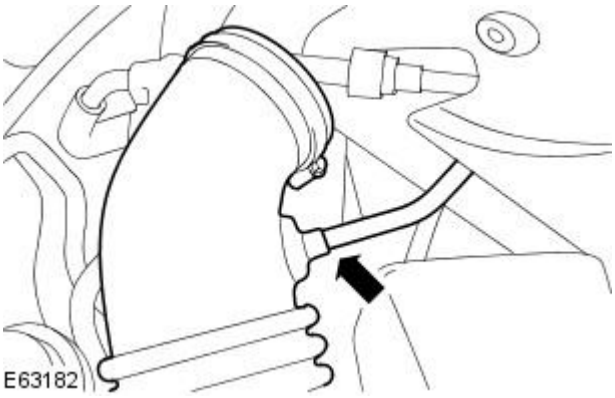


**2.** Remove the air cleaner outlet pipe.

- Disconnect the engine breather hose.

## Installation

**1.** To install, reverse the removal procedure.

GETtheMANUALS.org

# Intake Air Distribution and Filtering - V8 4.2L Petrol/V8 S/C 4.2L Petrol -

**Torque Specifications**

| Description | Nm | lb-ft | lb-in |
|---|---|---|---|
| Air cleaner retaining bolt | 8 | - | 71 |
| Supercharger outlet pipe retaining nuts | 9 | - | 80 |
| Supercharger outlet pipe retaining bolts | 9 | - | 80 |
| Supercharger retaining bolts | 24 | 18 | - |
| Air intake elbow retaining bolts | 24 | 18 | - |
| Air intake elbow lower bracket retaining bolts | 20 | 15 | - |
| Exhaust gas recirculation (EGR) valve retaining bolts | 10 | 7 | - |
| Exhaust manifold to EGR valve tube retaining bolts | 21 | 15 | - |
| Exhaust manifold to EGR valve tube retaining nuts | 21 | 15 | - |
| Thermostat housing retaining bolts | 10 | 7 | - |
| Throttle body intake hose retaining clip | 5 | - | 45 |

GETtheMANUALS.org

# Intake Air Distribution and Filtering - V8 4.2L Petrol/V8 S/C 4.2L Petrol - Intake Air Distribution and Filtering

Description and Operation

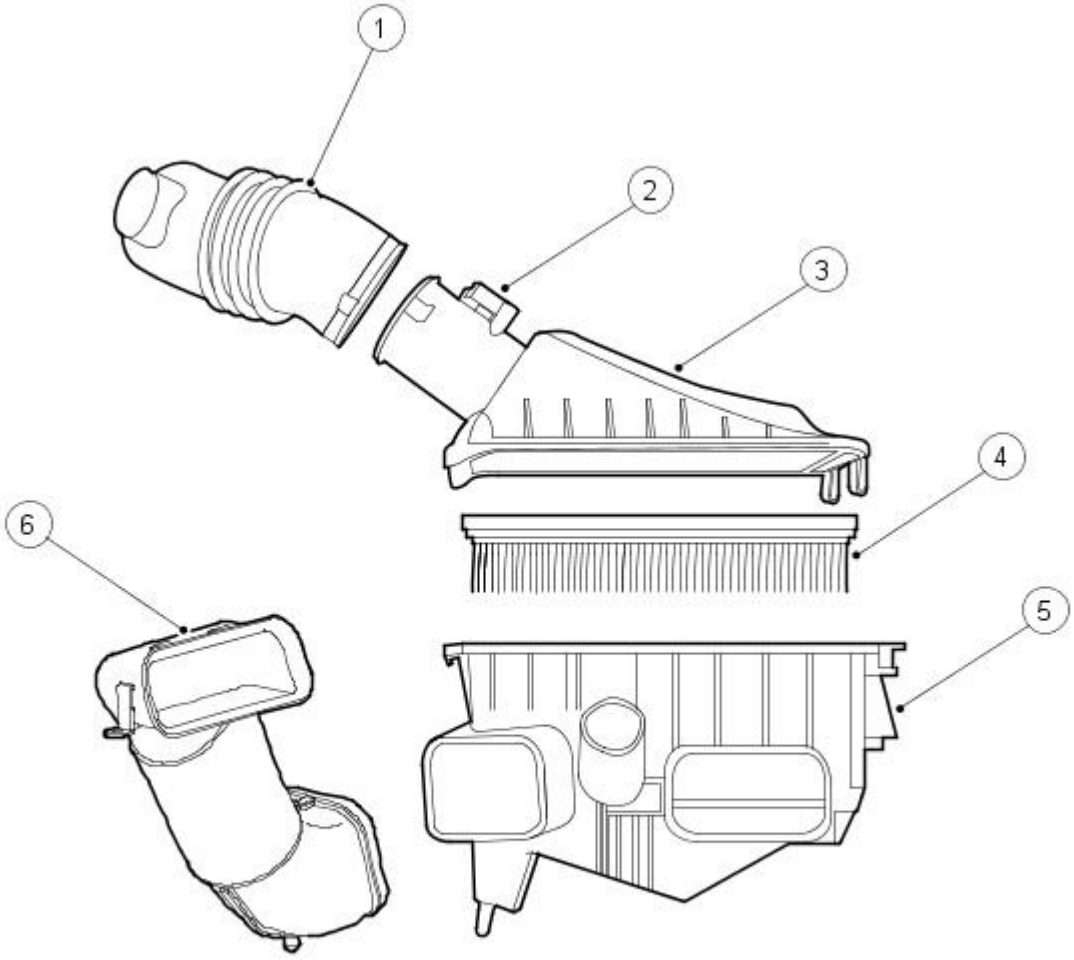


E30232

| Item | Part Number | Description |
|---|---|---|
| 1 | — | Air cleaner outlet pipe |
| 2 | — | Mass air flow (MAF) sensor |
| 3 | — | Air cleaner cover |
| 4 | — | Air cleaner element |
| 5 | — | Air cleaner |
| 6 | — | Air cleaner intake pipe |

Vehicles with supercharger

GETtheMANUALS.org

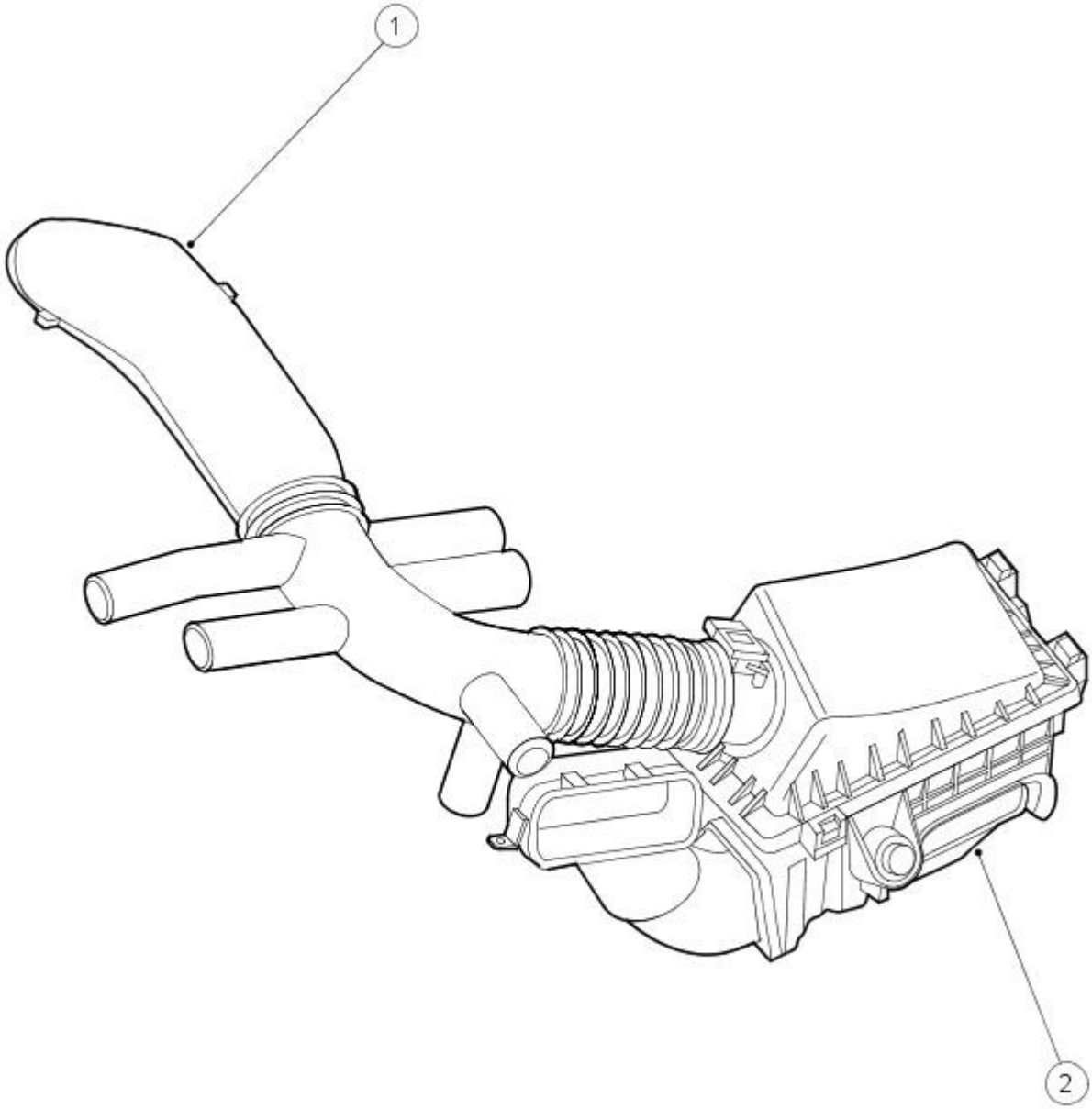


E30249

| Item | Part Number | Description |
|---|---|---|
| 1 | — | Throttle body intake pipe |
| 2 | — | Additional air inlet actuator |

GETtheMANUALS.org

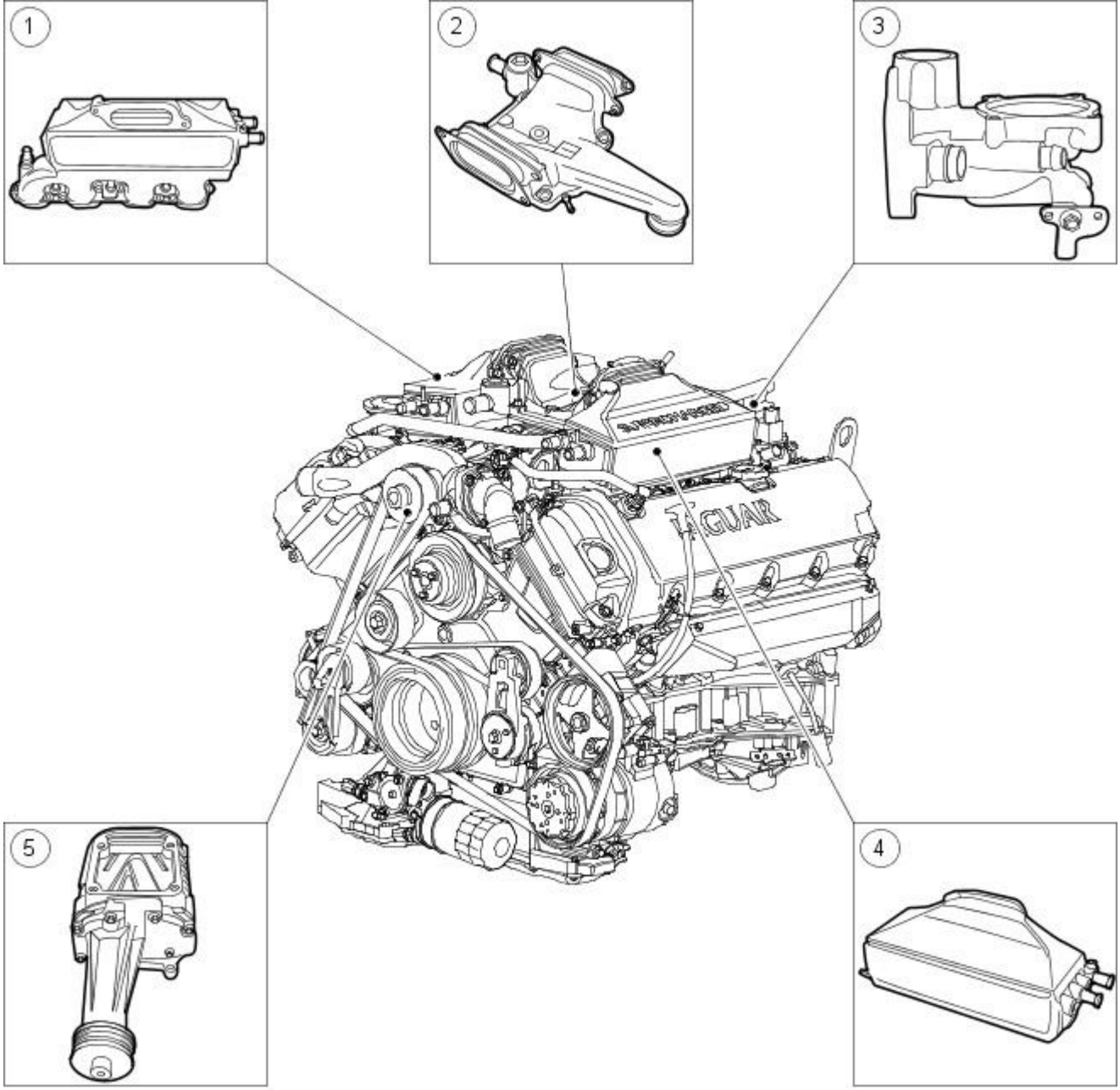


E30233

| Item | Part Number | Description |
|---|---|---|
| 1 | — | Charge air cooler |
| 2 | — | Supercharger outlet pipe |
| 3 | — | Throttle body elbow |
| 4 | — | Charge air cooler |
| 5 | — | Supercharger |

Intake air distribution and filtering for vehicles with supercharger

Air is supplied to the supercharger via the air cleaner, air cleaner outlet pipe, throttle body intake pipe, throttle body and throttle body elbow. The supercharger delivers pressurized air to two separate charge air cooler units, each unit being mounted on the cylinder bank it supplies. Pressurized cooled air is fed from the charge air coolers directly into each inlet port. The air cleaner outlet pipe differs from the normally aspirated by having tuned resonators to reduce inlet noise levels. An intake air temperature sensor is fitted at the outlet of the bank 1 charge air cooler. The sensor provides an input to the engine control module (ECM). For additional information, refer to Section 303-14A Electronic Engine Controls / 303-14B Electronic Engine Controls / 303-14C Electronic Engine Controls. The intake elbow directs the metered airflow from the throttle body outlet (underside of the throttle body) into the intake of the supercharger. The supercharger by-pass valve assembly is part of the intake elbow. The butterfly valve inside the assembly is opened by a diaphragm actuator operated by vacuum feed from the elbow. At closed or partially open throttle positions, the butterfly valve opens, allowing the airflow from the two charge air cooler inlets to be directed back to the supercharger inlet. This action inhibits the supercharging effect and reduces engine torque. Progressive opening of the throttle causes the by-pass valve to gradually close.

Supercharger

The supercharger is attached to the three mounting bosses between the two cylinder heads. The supercharger has a filled for life internal lubrication system. The supercharger is positively aligned with the drive belt by a doweled mounting bracket

Charge Air Cooler

Each cylinder bank is fitted with a charge air cooler which supplies pressurized air to the four cylinders. The inlet ports to the two charge air coolers are connected to the supercharger via the supercharger outlet pipe consisting of adjustable metal ducts with bonded rubber seals. The charge air coolers are water cooled via a radiator and water pump. For additional information, refer to Section 303-03A Engine Cooling / 303-03B Supercharger Cooling / 303-03C Engine Cooling.

GETtheMANUALS.org

# Intake Air Distribution and Filtering - V8 4.2L Petrol/V8 S/C 4.2L Petrol - Intake Air Distribution and FilteringVIN Range: M45255->N13088

Diagnosis and Testing

## Inspection and Verification

1. **1.** Verify the customer concern by operating the system.
2. **2.** Visually inspect for a obvious signs of mechanical damage.
3. **3.** Verify the customer concern.
4. **4.** Visually inspect for obvious signs of mechanical damage.

**Visual Inspection Chart**

| Mechanical |
|---|
| • Air cleaner intake pipe<br>• Air cleaner outlet pipe<br>• Air cleaner element<br>• Throttle body intake pipe<br>• Throttle body gasket<br>• Throttle body<br>• Supercharger outlet pipe to charge air cooler duct(s)<br>• Supercharger outlet pipe gasket<br>• Supercharger outlet pipe<br>• Air intake elbow<br>• Air intake elbow gasket<br>• Air intake elbow retaining bolt seal(s)<br>• Supercharger<br>• Charge air cooler gasket(s)<br>• Charge air cooler(s) |

5. **5.** If an obvious cause for an observed or reported concern is found, correct the cause (if possible) before proceeding to the next step.
6. **6.** If the cause is not visually evident, verify the symptom and refer to the Jaguar Approved Diagnostic System.

GETtheMANUALS.org

# Intake Air Distribution and Filtering - V8 4.2L Petrol/V8 S/C 4.2L Petrol - Intake Air Distribution and FilteringVIN Range: N13089->N52047

Diagnosis and Testing

## Inspection and Verification

1. **1.** Verify the customer concern.
2. **2.** Visually inspect for obvious signs of damage.

• NOTE: If any warning lights and/or messages were displayed when the fault occurred, refer to the driver information table for Diagnostic Trouble Codes (DTCs) associated with the display, then to the DTC index table for possible sources and actions. Some warnings will appear to clear when the ignition is cycled. This is often because the warning has flagged as a result of one of the vehicle's on-board diagnostic routines having run to detect the fault. If the same routine is not run when the ignition is switched **ON**, the warning will not reflag until the routine does run. See the DTC summaries for drive cycle routines.

**Visual inspection chart**

| Mechanical | Electrical |
|---|---|
| • Hoses and ducts (damage/connections)<br>• Air cleaner element (contaminated/blocked)<br>• Restricted air intake<br>• Supercharger<br>• Supercharger drive belt,<br>REFER to: Supercharger Belt (303-05 Accessory Drive, Removal and Installation).<br>• Charge air coolers (damage/connection)<br>• Supercharger outlet pipes and gaskets<br>• Supercharger air intake elbow/hoses<br>• Seals and gaskets | • Mass air flow (MAF) sensor<br>REFER to: Electronic Engine Controls - VIN Range: N80181->R99999 (303-14A Electronic Engine Controls - 2.5L NA V6 - AJV6/3.0L NA V6 - AJ27, Diagnosis and Testing).<br>• Manifold absolute pressure (MAP) sensor,<br>REFER to: Manifold Absolute Pressure (MAP) Sensor (303-14B Electronic Engine Controls - V8 4.2L Petrol/V8 S/C 4.2L Petrol, Removal and Installation).<br>• Intake air temperature (IAT) 2 sensor (vehicles with supercharger only),<br>REFER to: Intake Air Temperature (IAT) Sensor (303-14B Electronic Engine Controls - V8 4.2L Petrol/V8 S/C 4.2L Petrol, Removal and Installation).<br>• Throttle body,<br>REFER to: Throttle Body - Vehicles With: Supercharger, VIN Range: M45255->N52047 (303-04B Fuel Charging and Controls - V8 4.2L Petrol/V8 S/C 4.2L Petrol, Removal and Installation).<br>• Harness (security/damage)<br>• Connections (security/damage) |

## Symptom chart (vehicles without supercharger)

| Symptom | Possible cause | Action |
|---|---|---|
| Vehicle does not start/hard starting/poor performance | • Restricted/blocked air intake<br>• Restricted/blocked air cleaner element | Clear the restriction,<br>REFER to: Air Cleaner (303-12A Intake Air Distribution and Filtering - 2.5L NA V6 - AJV6/3.0L NA V6 - AJ27, Removal and Installation).<br>Replace the air cleaner element as necessary,<br>REFER to: Air Cleaner Element (303-12A Intake Air Distribution and Filtering - 2.5L NA V6 - AJV6/3.0L NA V6 - AJ27, Removal and Installation). |
| Excessive intake noise | • Intake pipe disconnected/damaged after the air cleaner<br>• Air cleaner assembly incorrectly assembled/damaged | Check the intake system and hoses for correct installation/damage,<br>REFER to: Air Cleaner (303-12A Intake Air Distribution and Filtering - 2.5L NA V6 - AJV6/3.0L NA V6 - AJ27, Removal and Installation). |

**Symptom chart (vehicles with supercharger)**

• NOTE: Symptoms of intake blockages, etc, will be common to both vehicles with and without supercharger.

| Symptom | Possible cause | Action |
|---|---|---|
| Lack of boost | • Supercharger drive belt broken/slipping<br>• Supercharger fault<br>• supercharger air intake elbow fault<br>• Major air leakage (after the supercharger) | Check the supercharger and drive belt (see visual inspection). For supercharger air intake elbow tests, GO to Pinpoint Test A. Check the charge air coolers and pipework (see visual inspection). |
| Noise | • Supercharger drive belt slipping<br>• Supercharger fault<br>• Major air leakage (after the supercharger) | Check the supercharger and drive belt (see visual inspection). Remove the supercharger drive belt and recheck for noise. Turn the supercharger by hand and check for excessive resistance. Check the supercharger pulley for excessive play. Check the charge air coolers and pipework (see visual inspection). |

## DTC index

| DTC | Description | Possible cause | Action |
|---|---|---|---|
| P0096 | IAT2 sensor range/performance | • IAT2 sensor disconnected<br>• IAT2 sensor circuit: high resistance<br>• IAT2 sensor failure | |
| P0097 | IAT2 sensor circuit high voltage | • IAT2 sensor disconnected<br>• IAT2 sensor circuit: short circuit to battery<br>• IAT2 sensor circuit: high resistance<br>• IAT2 sensor failure | |
| P0098 | IAT2 sensor circuit low voltage | • IAT2 sensor circuit: short circuit to ground<br>• IAT2 sensor failure | |

GETtheMANUALS.org

## Pinpoint tests

CAUTION: When probing connectors to take measurements in the course of the pinpoint tests, use the adaptor kit, part number 3548-1358-00. Failure to follow this instruction may result in damage to the vehicle.

• NOTE: When performing electrical voltage or resistance tests, always use a digital multimeter (DMM) accurate to 3 decimal places, and with an up-to-date calibration certificate. When testing resistance, always take the resistance of the DMM leads into account.

• NOTE: Check and rectify basic faults before beginning diagnostic routines involving pinpoint tests.

| PINPOINT TEST A : CHECK THE SUPERCHARGER AIR INTAKE ELBOW | |
|---|---|
| **TEST CONDITIONS** | **DETAILS/RESULTS/ACTIONS** |
| **A1: CHECK THE AIR INTAKE ELBOW VACUUM LINE** | |
| | 1 Check the vacuum connection to the supercharger air intake elbow at both ends. |
| | 2 Check the vacuum line to the supercharger air intake elbow along its length. |
| | Is the vacuum line connected and in good condition?<br>**Yes**<br>GO to A2.<br>**No**<br>Reconnect or replace the vacuum line as necessary. Test the system for normal operation. |
| **A2: CHECK THE OPERATION OF THE AIR INTAKE ELBOW ACTUATOR LINKAGE** | |
| | 1 Disconnect the vacuum line from the actuator diaphragm. |
| | 2 Connect a suitable hand vacuum pump to the actuator diaphragm. |
| | 3 Apply a vacuum to the actuator diaphragm. |
| | 4 Observe the actuator linkage operation. |
| | Does the actuator linkage operate?<br>**Yes**<br>GO to A3.<br>**No**<br>Install a new supercharger air intake elbow. Test the system for normal operation. |
| **A3: CHECK THE OPERATION OF THE AIR INTAKE ELBOW BUTTERFLY** | |
| | 1 Remove the air cleaner outlet pipe,<br>REFER to: Air Cleaner Outlet Pipe (303-12B Intake Air Distribution and Filtering - V8 4.2L Petrol/V8 S/C 4.2L Petrol, Removal and Installation). |
| | 2 Remove the supercharger outlet pipe,<br>REFER to: Supercharger Outlet Pipe (303-12B Intake Air Distribution and Filtering - V8 4.2L Petrol/V8 S/C 4.2L Petrol, Removal and Installation). |
| | 3 Apply a vacuum to the actuator diaphragm. |
| | 4 Observe the butterfly operation. |
| | Does the butterfly operate?<br>**Yes**<br>Check for another cause of the malfunction.<br>**No**<br>Install a new supercharger air intake elbow. Test the system for normal operation. |

GETtheMANUALS.org

# Intake Air Distribution and Filtering - V8 4.2L Petrol/V8 S/C 4.2L Petrol - Intake Air Distribution and FilteringVIN Range: N52048->N99999

Diagnosis and Testing

## Overview

There are changes to the engine management system (EMS) for 2006 my, the most obvious of which will be the change to 7-digit diagnostic trouble codes (DTCs) from the familiar 5-digit, plus the addition of secondary air injection and changes to evaporative emissions and exhaust gas recirculation to comply with stage four emissions requirements.

For more information on these systems,
REFER to: Engine Emission Control - VIN Range: N52048->N99999 (303-08A Engine Emission Control - V8 4.2L Petrol/V8 S/C 4.2L Petrol/2.5L NA V6 - AJV6/3.0L NA V6 - AJ27, Description and Operation) /
Evaporative Emissions - VIN Range: N52048->N99999 (303-13 Evaporative Emissions, Description and Operation).

## Inspection and Verification

1. **1.** Verify the customer concern.
2. **2.** Visually inspect for obvious signs of damage.

**Visual inspection chart**

| Mechanical | Electrical |
|---|---|
| • Hoses and ducts (damage/connections)<br>• Air cleaner element (contaminated/blocked)<br>• Restricted air intake<br>• Supercharger<br>• Supercharger drive belt<br>• Charge air coolers (damage/connection)<br>• Supercharger outlet pipes and gaskets<br>• Supercharger air intake elbow/hoses<br>• Seals and gaskets | • Mass air flow (MAF) sensor<br>• Manifold absolute pressure (MAP) sensor<br>• Throttle body<br>• Harness (security/damage)<br>• Connections (security/damage) |

3. **3.** If an obvious cause for an observed or reported concern is found, correct the cause (if possible) before proceeding to the next step.
4. **4.** If the cause is not visually evident use the Jaguar approved diagnostic system or a scan tool to retrieve the fault codes before proceeding to the diagnostic trouble code (DTC) index.

## Symptom chart (vehicles without supercharger)

| Symptom | Possible cause | Action |
|---|---|---|
| Vehicle does not start/hard starting/poor performance | • Restricted/blocked air intake<br>• Restricted/blocked air cleaner element | Clear the restriction,<br>REFER to: Air Cleaner (303-12B Intake Air Distribution and Filtering - V8 4.2L Petrol/V8 S/C 4.2L Petrol, Removal and Installation).<br>Replace the air cleaner element as necessary,<br>REFER to: Air Cleaner Element (303-12B Intake Air Distribution and Filtering - V8 4.2L Petrol/V8 S/C 4.2L Petrol, Removal and Installation). |
| Excessive intake noise | • Intake pipe disconnected/damaged after the air cleaner<br>• Air cleaner assembly incorrectly assembled/damaged | Check the intake system and hoses for correct installation/damage,<br>REFER to: Air Cleaner (303-12B Intake Air Distribution and Filtering - V8 4.2L Petrol/V8 S/C 4.2L Petrol, Removal and Installation). |

**Symptom chart (vehicles with supercharger)**

| Symptom | Possible cause | Action |
|---|---|---|
| Lack of boost | • Supercharger drive belt broken/slipping<br>• Supercharger fault<br>• supercharger air intake elbow fault<br>• Major air leakage (after the supercharger) | Check the supercharger and drive belt (see visual inspection). For supercharger air intake elbow tests, GO to Pinpoint Test A. Check the charge air coolers and pipework (see visual inspection). |
| Noise | • Supercharger drive belt slipping<br>• Supercharger fault<br>• Major air leakage (after the supercharger) | Check the supercharger and drive belt (see visual inspection). Remove the supercharger drive belt and recheck for noise. Turn the supercharger by hand and check for excessive resistance. Check the supercharger pulley for excessive play. Check the charge air coolers and pipework (see visual inspection). |

## DTC index

• NOTE: Generic scan tools may not read the codes listed, or may read only 5-digit codes. Match the 5 digits from the scan tool to the first 5 digits of the 7-digit code listed to identify the fault (the last 2 digits give extra information read by the manufacturer-approved diagnostic system).

| DTC | Description | Possible causes | Action |
|---|---|---|---|
| P010100 | MAF circuit range/performance | • Blocked air cleaner<br>• Air intake leak<br>• Engine breather leak<br>• MAF sensor to ECM sensing circuit: high resistance, intermittent short circuit to ground | Clear the restriction,<br>REFER to: Air Cleaner (303-12B Intake Air Distribution and Filtering - V8 4.2L Petrol/V8 S/C 4.2L Petrol, Removal and Installation).<br>Replace the air cleaner element as necessary,<br>REFER to: Air Cleaner Element (303-12B Intake Air Distribution and Filtering - V8 4.2L Petrol/V8 S/C 4.2L Petrol, Removal and |

SETHMANUALS.com

| DTC | Description | Possible causes | Action |
|---|---|---|---|
| | | • MAF sensor supply circuit: high resistance | Installation).<br>Inspect the engine breather system,<br>REFER to: Engine Emission Control - VIN Range: N80181->R99999 (303-08A Engine Emission Control - V8 4.2L Petrol/V8 S/C 4.2L Petrol/2.5L NA V6 - AJV6/3.0L NA V6 - AJ27, Diagnosis and Testing).<br>For MAF sensor tests,<br>REFER to: Electronic Engine Controls - VIN Range: N80181->R99999 (303-14B Electronic Engine Controls - V8 4.2L Petrol/V8 S/C 4.2L Petrol, Diagnosis and Testing).<br>. |
| P010600 | MAP/Barometric pressure circuit range/performance | • Intake manifold air leak (loose or missing component)<br>• MAP sensor to ECM circuit(s) fault<br>• MAP sensor failure | Check the intake system and hoses for correct installation/damage,<br>REFER to: Air Cleaner (303-12B Intake Air Distribution and Filtering - V8 4.2L Petrol/V8 S/C 4.2L Petrol, Removal and Installation).<br>Replace the air cleaner element as necessary,<br>REFER to: Air Cleaner Element (303-12B Intake Air Distribution and Filtering - V8 4.2L Petrol/V8 S/C 4.2L Petrol, Removal and Installation).<br>Check the intake manifold for correct installation/damage,<br>REFER to: Intake Manifold - VIN Range: N52048->N99999 (303-01B Engine - V8 4.2L Petrol/V8 S/C 4.2L Petrol, In-vehicle Repair).<br>For MAP sensor tests,<br>REFER to: Electronic Engine Controls - VIN Range: N80181->R99999 (303-14B Electronic Engine Controls - V8 4.2L Petrol/V8 S/C 4.2L Petrol, Diagnosis and Testing).<br>. |
| P017100 | System too lean (right hand bank) | • Air intake leak between MAF sensor and cylinder head<br>• Fuel filter/system restriction<br>• MAF sensor fault (low intake air flow)<br>• Exhaust leak (before catalyst) | Check the intake system and hoses for correct installation/damage,<br>REFER to: Air Cleaner (303-12B Intake Air Distribution and Filtering - V8 4.2L Petrol/V8 S/C 4.2L Petrol, Removal and Installation).<br>Check the fuel pressure, check the fuel lines,<br>REFER to: Electronic Engine Controls - VIN Range: N80181->R99999 (303-14B Electronic Engine Controls - V8 4.2L Petrol/V8 S/C 4.2L Petrol, Diagnosis and Testing).<br>Check the exhaust system (before catalyst) for condition and security,<br>REFER to: Exhaust System - VIN Range: N13089->N99999 (309-00 Exhaust System, Diagnosis and Testing). |
| P017200 | System too rich (right hand bank) | • Restricted air filter<br>• MAF sensor fault (high intake air flow) | Clear the restriction,<br>REFER to: Air Cleaner (303-12B Intake Air Distribution and Filtering - V8 4.2L Petrol/V8 S/C 4.2L Petrol, Removal and Installation).<br>Replace the air cleaner element as necessary,<br>REFER to: Air Cleaner Element (303-12B Intake Air Distribution and Filtering - V8 4.2L Petrol/V8 S/C 4.2L Petrol, Removal and Installation).<br>For MAF sensor tests,<br>REFER to: Electronic Engine Controls - VIN Range: N80181->R99999 (303-14B Electronic Engine Controls - V8 4.2L Petrol/V8 S/C 4.2L Petrol, Diagnosis and Testing).<br>. |
| P017400 | System too lean (left hand bank) | • Air intake leak between MAF sensor and cylinder head<br>• Fuel filter/system restriction<br>• MAF sensor fault (low intake air flow)<br>• Exhaust leak (before catalyst) | Check the intake system and hoses for correct installation/damage,<br>REFER to: Air Cleaner (303-12B Intake Air Distribution and Filtering - V8 4.2L Petrol/V8 S/C 4.2L Petrol, Removal and Installation).<br>Check the fuel pressure, check the fuel lines,<br>REFER to: Fuel Tank and Lines - V8 4.2L Petrol/V8 S/C 4.2L Petrol/2.5L NA V6 - AJV6/3.0L NA V6 - AJ27, VIN Range: N80181->R99999 (310-01 Fuel Tank and Lines, Diagnosis and Testing).<br>Check the exhaust system (before catalyst) for condition and security,<br>REFER to: Exhaust System - VIN Range: N13089->N99999 (309-00 Exhaust System, Diagnosis and Testing). |
| P017500 | System too rich (left hand bank) | • Restricted air filter<br>• MAF sensor fault (high intake air flow) | Clear the restriction,<br>REFER to: Air Cleaner (303-12B Intake Air Distribution and Filtering - V8 4.2L Petrol/V8 S/C 4.2L Petrol, Removal and Installation).<br>Replace the air cleaner element as necessary,<br>REFER to: Air Cleaner Element (303-12B Intake Air Distribution and Filtering - V8 4.2L Petrol/V8 S/C 4.2L Petrol, Removal and Installation).<br>For MAF sensor tests,<br>REFER to: Electronic Engine Controls - VIN Range: N80181->R99999 (303-14B Electronic Engine Controls - V8 4.2L Petrol/V8 S/C 4.2L Petrol, Diagnosis and Testing).<br>. |
| P050600 | Idle air control system RPM lower than expected | • Restricted air cleaner element<br>• MAF sensor fault (high intake air flow) | Clear the restriction,<br>REFER to: Air Cleaner (303-12B Intake Air Distribution and Filtering - V8 4.2L Petrol/V8 S/C 4.2L Petrol, Removal and Installation).<br>Replace the air cleaner element as necessary,<br>REFER to: Air Cleaner Element (303-12B Intake Air Distribution and Filtering - V8 4.2L Petrol/V8 S/C 4.2L Petrol, Removal and Installation).<br>For MAF sensor tests, |

GETtheMANUAL.org

| DTC | Description | Possible causes | Action |
|---|---|---|---|
| | | | REFER to: Electronic Engine Controls - VIN Range: N80181->R99999 (303-14B Electronic Engine Controls - V8 4.2L Petrol/V8 S/C 4.2L Petrol, Diagnosis and Testing). . |
| P050700 | Idle air control system RPM higher than expected | • Intake air leak between MAF sensor and throttle<br>• Intake air leak between throttle and engine<br>• Engine crankcase breather leak | Check the intake system and hoses for correct installation/damage,<br>REFER to: Air Cleaner (303-12B Intake Air Distribution and Filtering - V8 4.2L Petrol/V8 S/C 4.2L Petrol, Removal and Installation).<br>Inspect the engine breather system,<br>REFER to: Engine Emission Control - VIN Range: N80181->R99999 (303-08A Engine Emission Control - V8 4.2L Petrol/V8 S/C 4.2L Petrol/2.5L NA V6 - AJV6/3.0L NA V6 - AJ27, Diagnosis and Testing). |

## Pinpoint tests

• NOTE: Check and rectify basic faults before beginning diagnostic routines involving pinpoint tests.

| PINPOINT TEST A : CHECK THE SUPERCHARGER AIR INTAKE ELBOW | |
|---|---|
| **TEST CONDITIONS** | **DETAILS/RESULTS/ACTIONS** |
| **A1: CHECK THE AIR INTAKE ELBOW VACUUM LINE** | |
| | 1 Check the vacuum connection to the supercharger air intake elbow at both ends. |
| | 2 Check the vacuum line to the supercharger air intake elbow along its length. |
| | Is the vacuum line connected and in good condition?<br>**Yes**<br>GO to A2.<br>**No**<br>CONNECT or replace the vacuum line as necessary. Test the system for normal operation. |
| **A2: CHECK THE OPERATION OF THE AIR INTAKE ELBOW ACTUATOR LINKAGE** | |
| | 1 Disconnect the vacuum line from the actuator diaphragm. |
| | 2 Connect a suitable hand vacuum pump to the actuator diaphragm. |
| | 3 Apply a vacuum to the actuator diaphragm. |
| | 4 Observe the actuator linkage operation. |
| | Does the actuator linkage operate?<br>**Yes**<br>GO to A3.<br>**No**<br>INSTALL a new supercharger air intake elbow. Test the system for normal operation. |
| **A3: CHECK THE OPERATION OF THE AIR INTAKE ELBOW BUTTERFLY** | |
| | 1 Remove the air cleaner outlet pipe,<br>REFER to: Air Cleaner Outlet Pipe (303-12B Intake Air Distribution and Filtering - V8 4.2L Petrol/V8 S/C 4.2L Petrol, Removal and Installation). |
| | 2 Remove the supercharger outlet pipe,<br>REFER to: Supercharger Outlet Pipe (303-12B Intake Air Distribution and Filtering - V8 4.2L Petrol/V8 S/C 4.2L Petrol, Removal and Installation). |
| | 3 Apply a vacuum to the actuator diaphragm. |
| | 4 Observe the butterfly operation. |
| | Does the butterfly operate?<br>**Yes**<br>Check for another cause of the malfunction.<br>**No**<br>INSTALL a new supercharger air intake elbow. Test the system for normal operation. |

GETtheMANUALS.org

# Intake Air Distribution and Filtering - V8 4.2L Petrol/V8 S/C 4.2L Petrol - Air Cleaner

Removal and Installation

## Removal

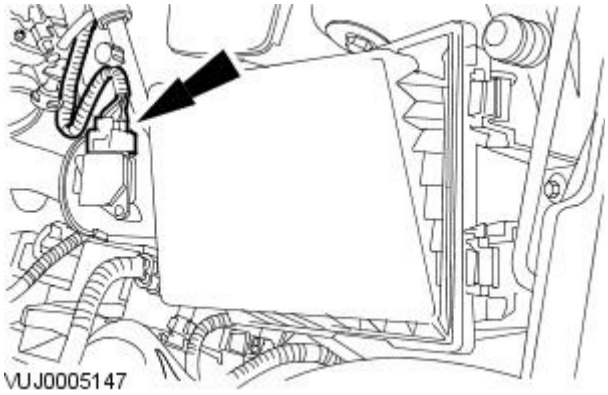


1. Remove the air cleaner outlet pipe.
   For additional information, refer to Air Cleaner Outlet Pipe in this section.
2. Disconnect the mass air flow (MAF) sensor electrical connector.

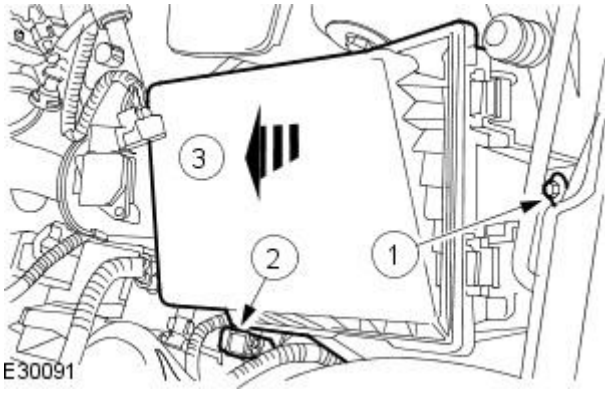


3. Remove the radiator grill opening panel.
   For additional information, refer to Section 501-02 Front End Body Panels.
4. Remove the air cleaner.
   1. Remove the air cleaner retaining bolt.
   2. Disconnect the extra air flap actuator electrical connector.
   3. Remove the air cleaner.

## Installation

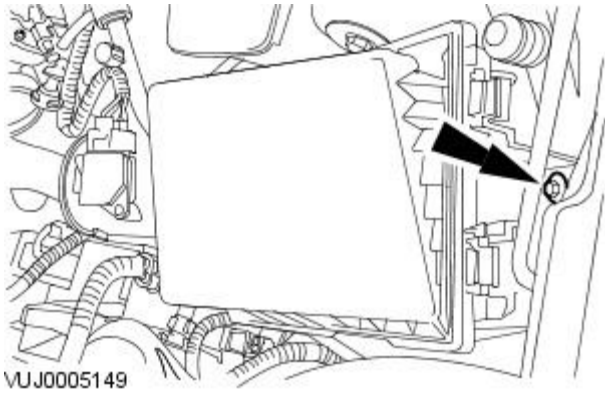


1. NOTE: When installing the air cleaner, make sure the locating pegs fit securely in the grommets located in the inner wing.

   To install, reverse the removal procedure.

   - Tighten to 8Nm.

GETtheMANUALS.org

# Intake Air Distribution and Filtering - V8 4.2L Petrol / V8 S/C 4.2L Petrol - Air Cleaner Element

Removal and Installation

## Removal

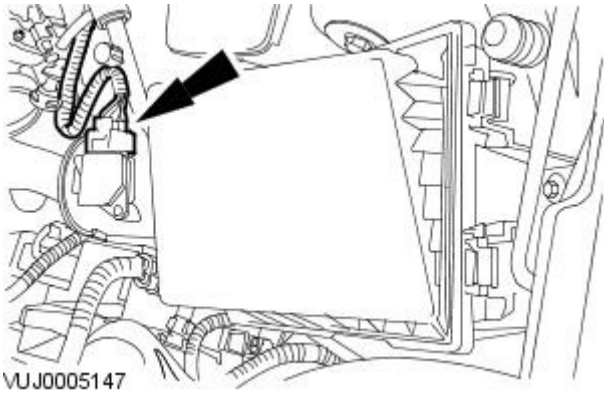


1. Remove the air cleaner outlet pipe.
   For additional information, refer to Air Cleaner Outlet Pipe in this section.
2. Disconnect the mass air flow sensor (MAF) electrical connector.

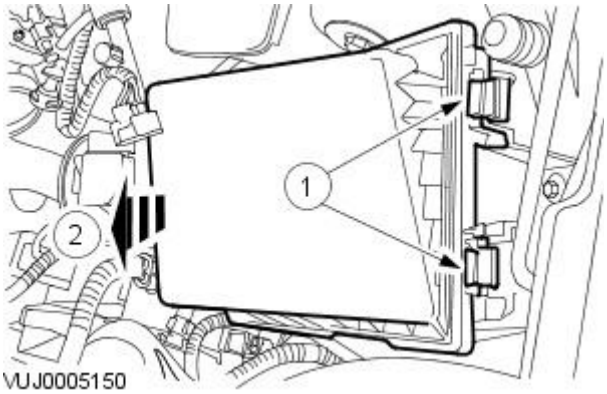


3. Remove the air cleaner cover.
   1. Release the retaining clips.
   2. Remove the air cleaner cover.

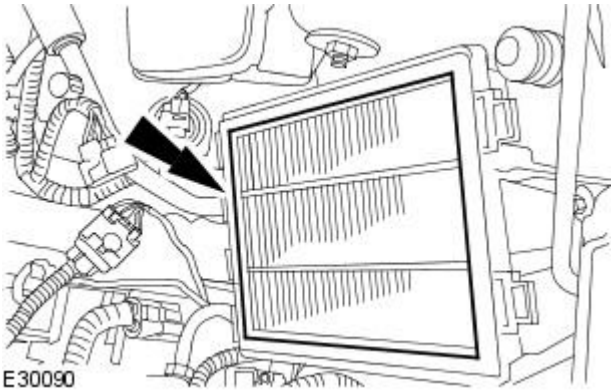


4. Remove the air cleaner element.

## Installation

1. To install, reverse the removal procedure.

GETtheMANUALS.org

# Intake Air Distribution and Filtering - V8 4.2L Petrol/V8 S/C 4.2L Petrol - Air Cleaner Outlet Pipe

Removal and Installation

## Removal

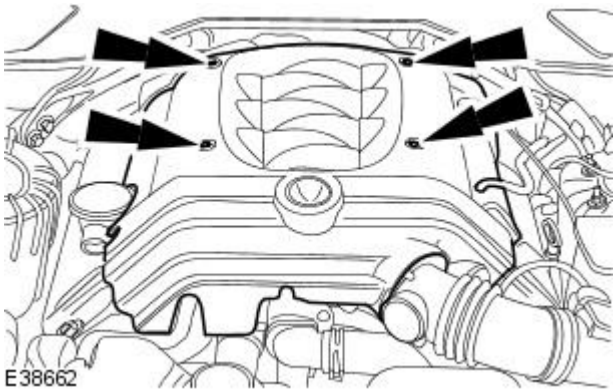


**1.** Remove the engine cover.

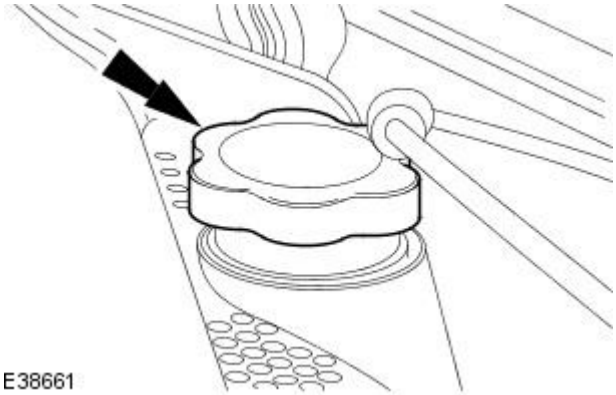


**2.** Install the oil filler cap.

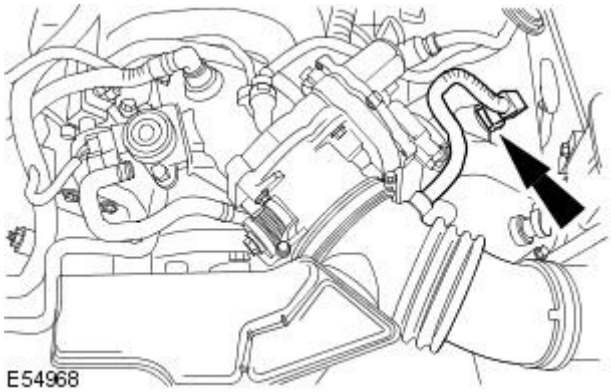


**3.** Disconnect the engine breather hose.

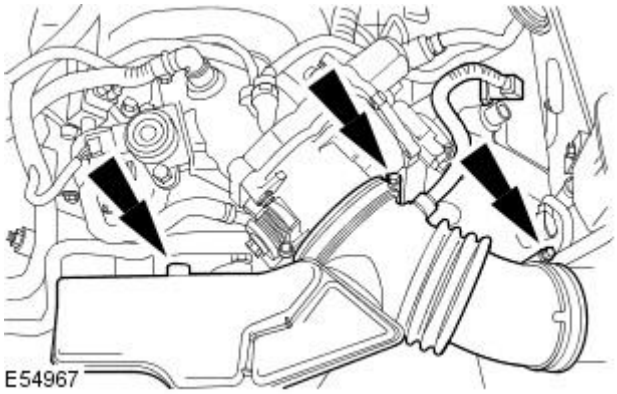


**4.** Remove the air cleaner outlet pipe.

## Installation

**1.** To install, reverse the removal procedure.

GETtheMANUALS.org

# Intake Air Distribution and Filtering - V8 4.2L Petrol/V8 S/C 4.2L Petrol - Charge Air Cooler

Removal and Installation

## Removal

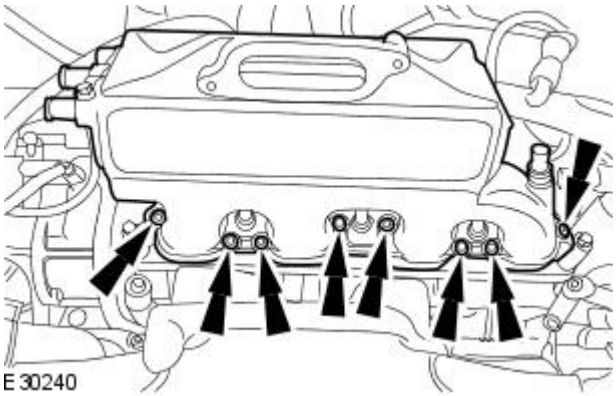


**1.** Remove the supercharger.
For additional information, refer to: Supercharger - VIN Range: M45255->N52047 (303-12B Intake Air Distribution and Filtering - V8 4.2L Petrol/V8 S/C 4.2L Petrol, Removal and Installation).

**2.** CAUTION: Make sure no foreign matter enters the cylinder head ports.

Remove the charge air cooler.

- Remove and discard the charge air cooler gasket.

## Installation

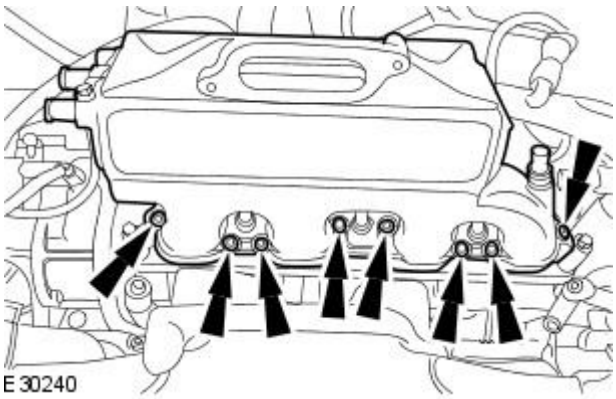


**1.** Install the charge air cooler.

- Install a new charge air cooler gasket.
- Tighten to 13 Nm.

**2.** Install the supercharger.
For additional information, refer to: Supercharger - VIN Range: M45255->N52047 (303-12B Intake Air Distribution and Filtering - V8 4.2L Petrol/V8 S/C 4.2L Petrol, Removal and Installation).

GETtheMANUALS.org

# Intake Air Distribution and Filtering - V8 4.2L Petrol/V8 S/C 4.2L Petrol - SuperchargerVIN Range: M45255->N52047

Removal and Installation

## Removal

1. Disconnect the battery ground cable.
   For additional information, refer to: Battery Disconnect and Connect (414-01 Battery, Mounting and Cables, General Procedures).
2. Carry out the supercharging cooling system draining procedure.
   For additional information, refer to: Supercharger Cooling System Draining, Filling and Bleeding (303-03B Supercharger Cooling, General Procedures).
3. Detach the supercharger belt.
   - Use a 1/2 inch square drive bar to rotate the supercharger belt tensioner.
   - Detach the supercharger belt.

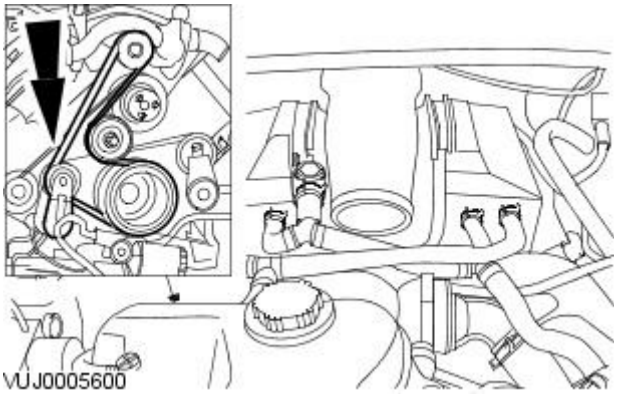


4. Remove the throttle body.
   For additional information, refer to: Throttle Body - Vehicles With: Supercharger, VIN Range: M45255->N52047 (303-04B Fuel Charging and Controls - V8 4.2L Petrol/V8 S/C 4.2L Petrol, Removal and Installation).
5. Detach the hoses.
   - Reposition the hose retaining clip.

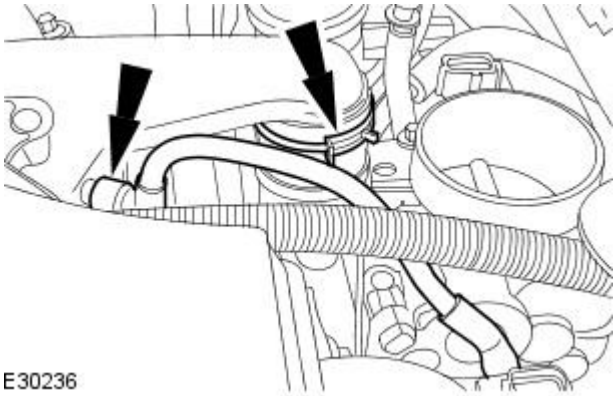


6. Detach the supercharger outlet pipe coolant hose.
   - Cap the coolant ports.

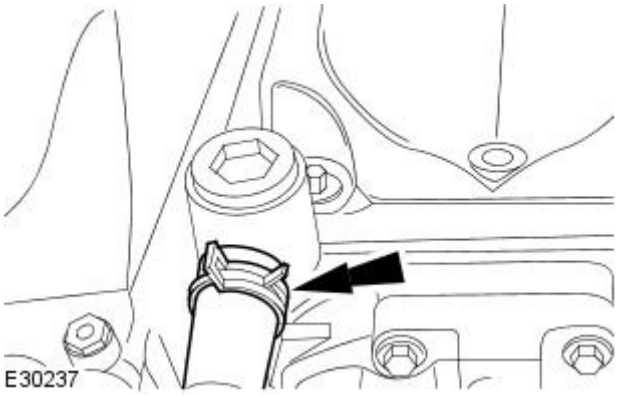


GETtheMANUALS.org

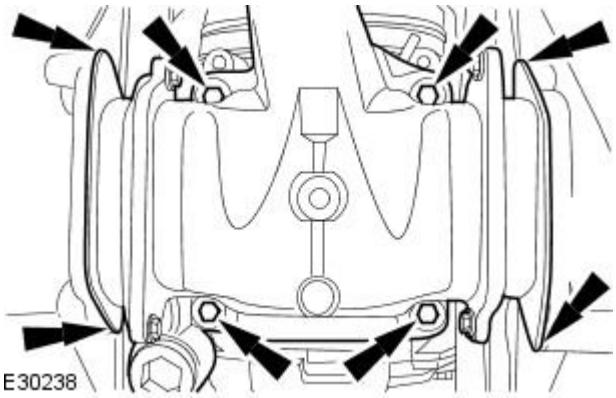


7. CAUTION: Make sure no foreign matter enters the supercharger.

Remove the supercharger outlet pipe

8. Remove and discard the supercharger outlet pipe gasket.
9. Remove and discard the supercharger outlet pipe retaining bolt seals.
10. Remove and discard the supercharger outlet pipe to charge air coolers ducts.

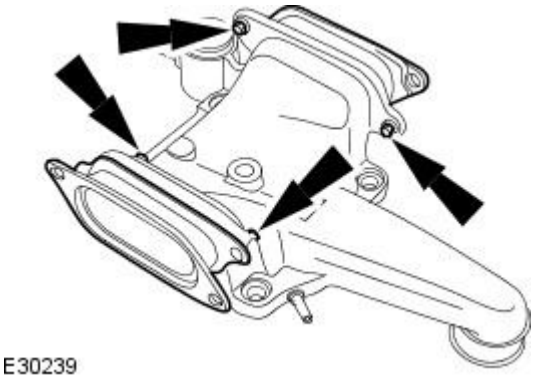


11. Disconnect the thermostat housing hoses

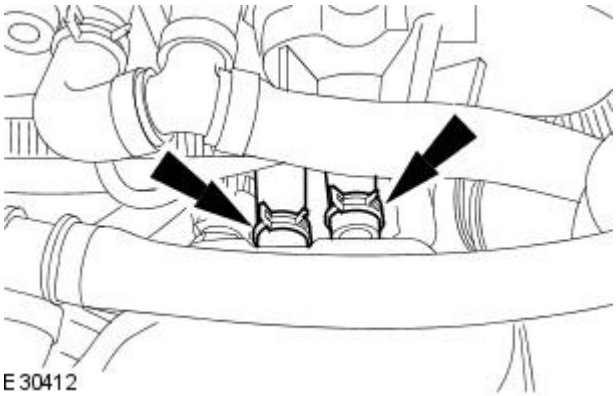


12. Disconnect the coolant temperature sensor electrical connector.

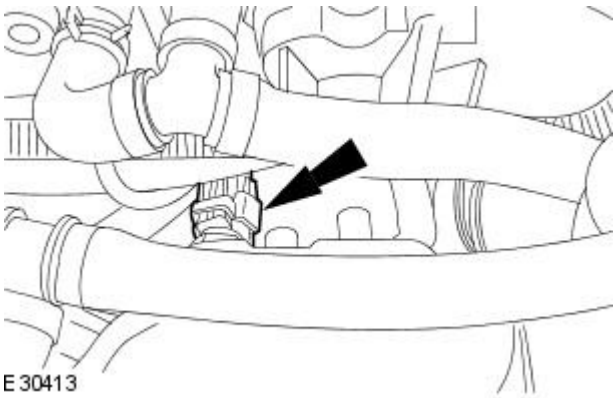


GETtheMANUALS.org

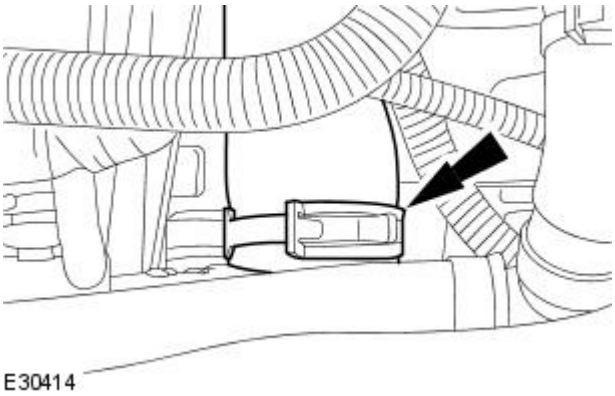


**13.** Reposition the thermostat housing hose retaining clip.

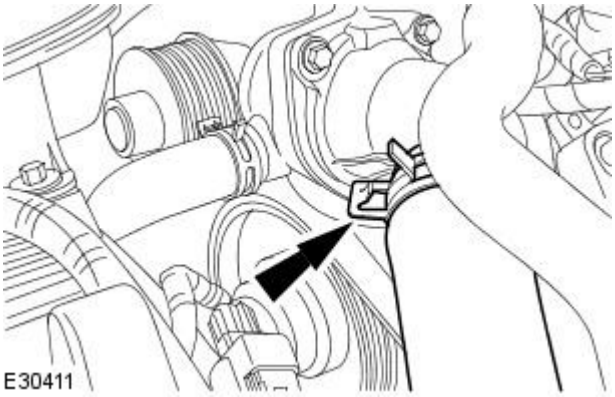


**14.** Disconnect the hose.

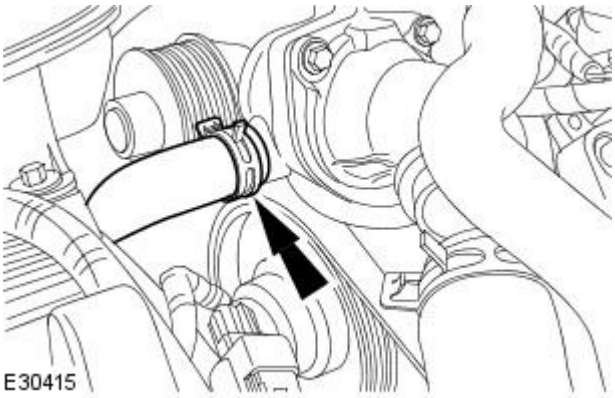


**15.** Disconnect the hose.

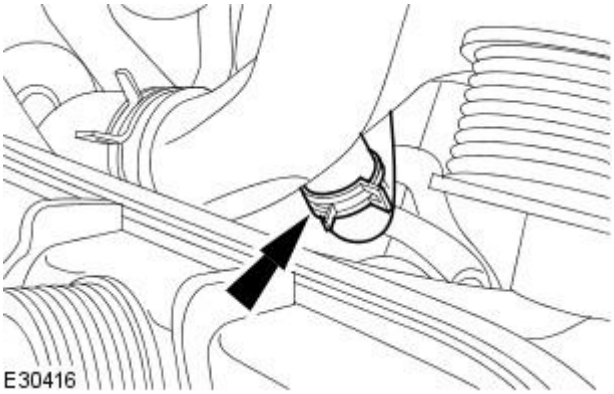


**16.** Disconnect the hose.

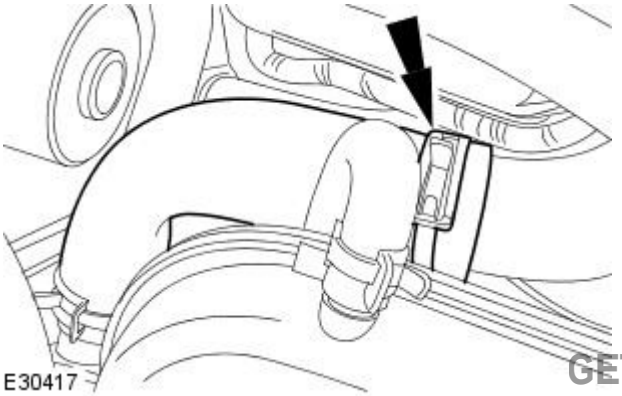


**17.** Disconnect the hose.

GETtheMANUALS.org

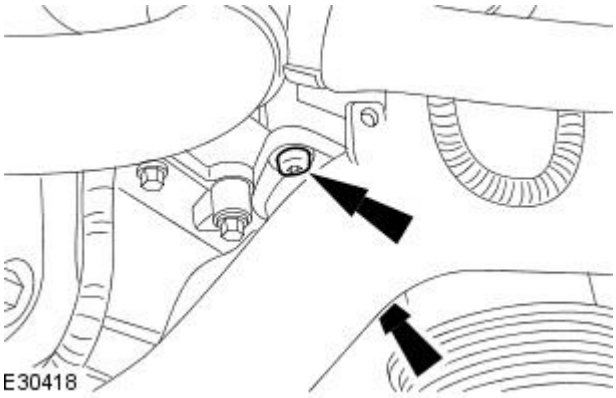


**18.** Remove the thermostat housing retaining bolts.

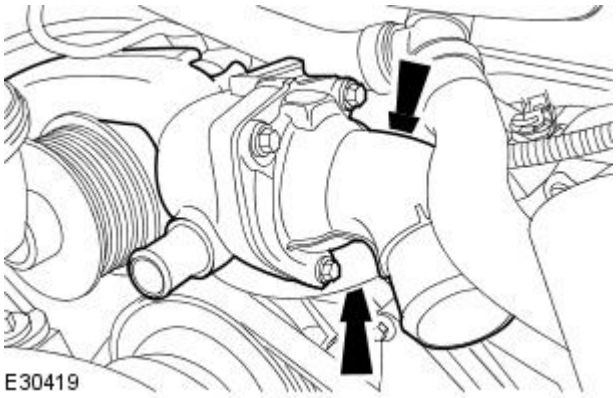


**19.** Remove the thermostat housing.

- Remove and discard thermostat housing O-ring seals.

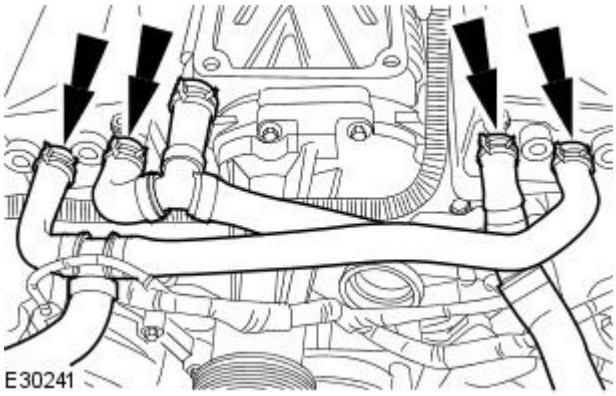


**20.** Disconnect the charge air cooler coolant pipes.

**21.** Disconnect the intake air temperature (IAT) sensor electrical connector.

**22.** Remove the throttle body.
For additional information, refer to: Throttle Body - Vehicles With: Supercharger, VIN Range: M45255->N52047 (303-04B Fuel Charging and Controls - V8 4.2L Petrol/V8 S/C 4.2L Petrol, Removal and Installation).

GETtheMANUALS.org

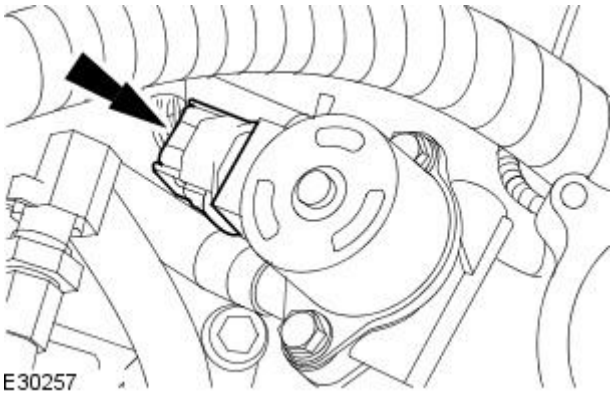


**23.** Disconnect the exhaust gas recirculation (EGR) valve electrical connector.

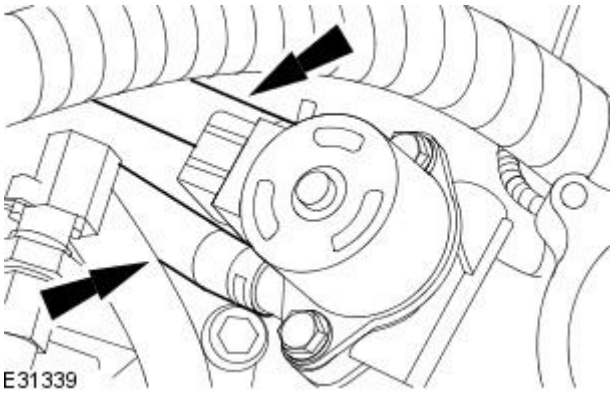


**24.** NOTE: Cap the exposed ports.

Disconnect the coolant hoses.

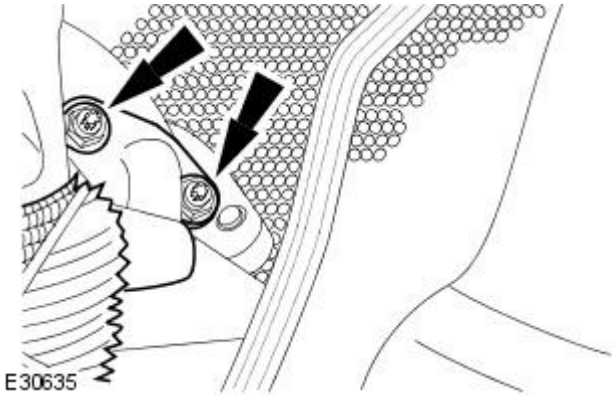


**25.** Remove the exhaust manifold to EGR valve tube retaining nuts.

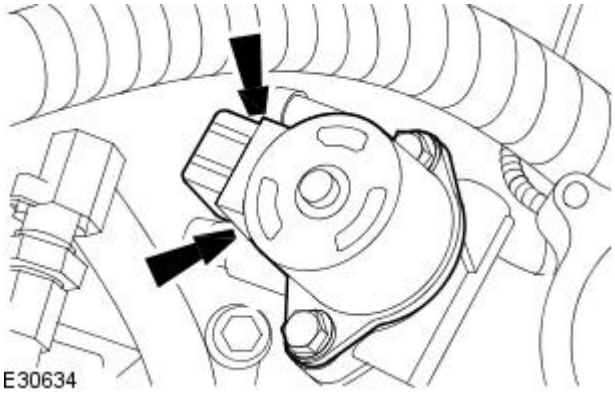


**26.** Remove the EGR valve and the exhaust manifold to EGR valve tube.

- Remove the retaining bolts.
- Remove and discard the exhaust manifold to EGR valve tube gasket.
- Remove and discard the EGR valve to air intake elbow gasket.

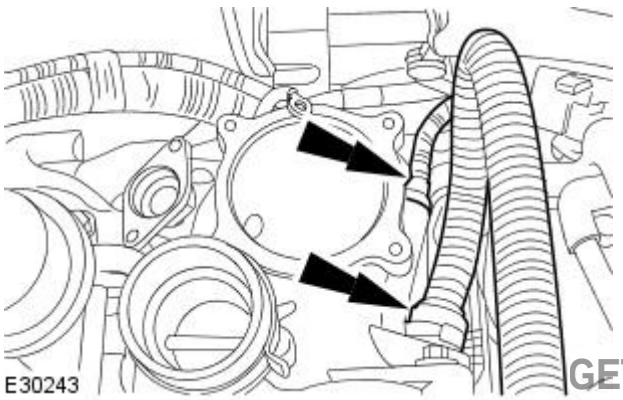


**27.** Disconnect the air intake elbow pipes.

GETtheMANUALS.org

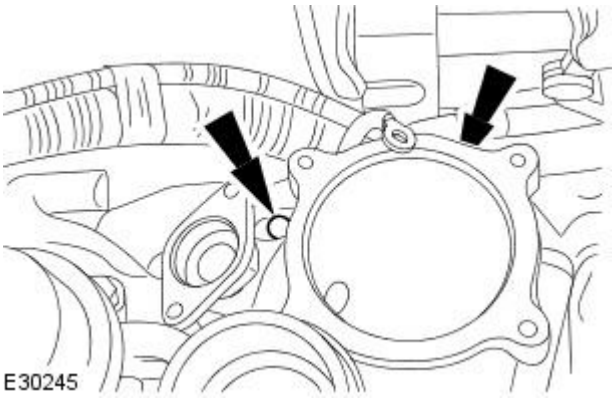


**28.** NOTE: Make sure correct location of the ground strap is noted.

Remove the air intake elbow retaining bracket lower retaining bolts.

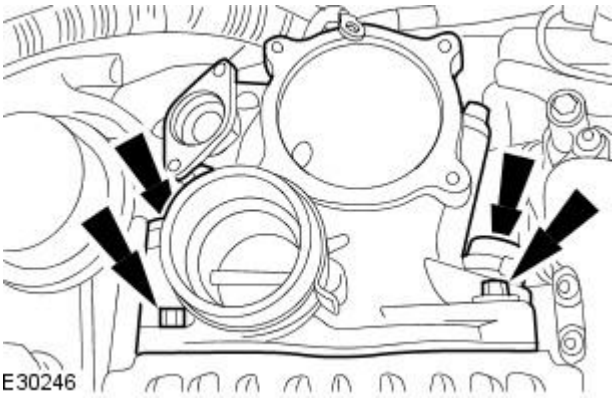


**29.** Detach the air intake elbow.

- Remove and discard the gasket.
- Remove and discard the retaining bolt seals.

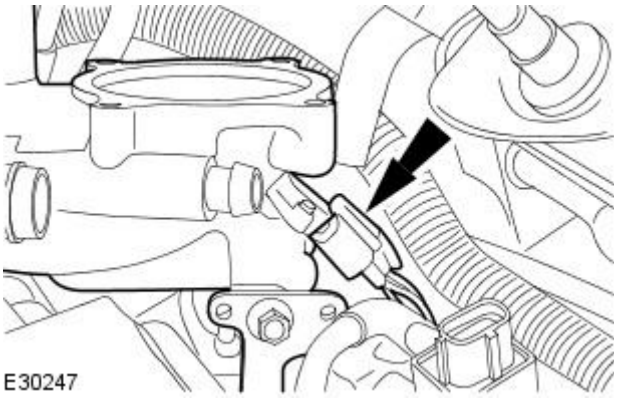


**30.** Remove the air intake elbow.

- Disconnect the manifold absolute pressure (MAP) sensor

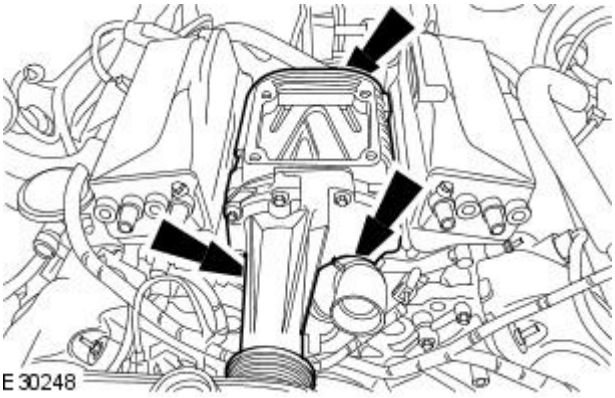


**31.** Remove the supercharger.

## Installation

GETtheMANUALS.org

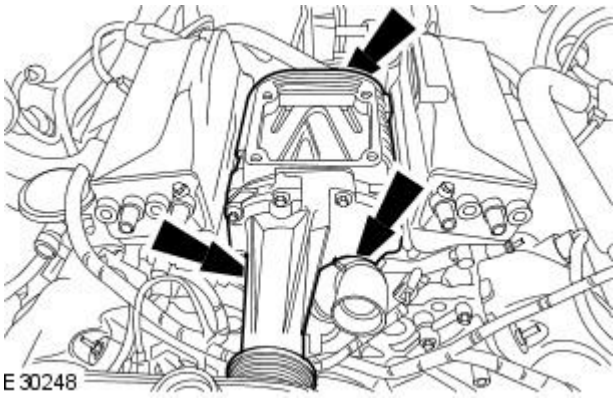


**1.** Install the supercharger.

- Tighten to 24 Nm.

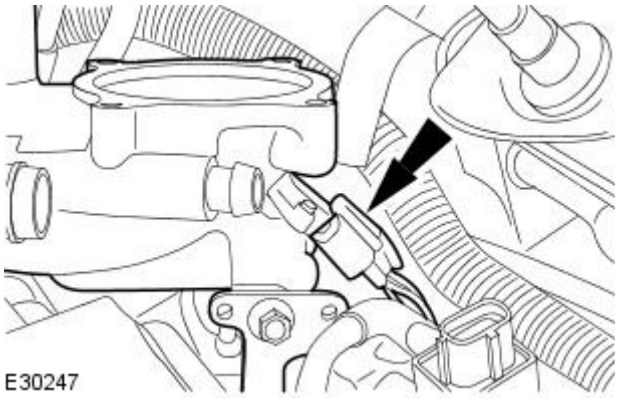


**2.** Connect the manifold absolute pressure (MAP) sensor.

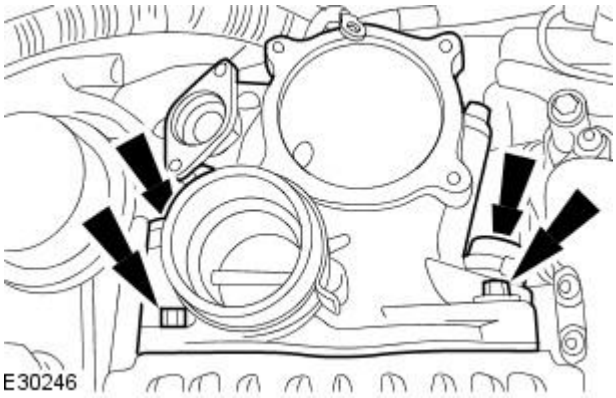


**3.** Install the air intake elbow.

- Install a new gasket.
- Install new retaining bolt seals.
- Tighten to 24 Nm.

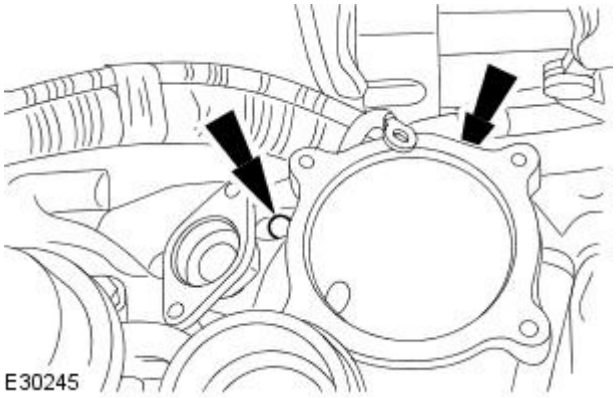


**4.** NOTE: Make sure ground strap is correctly installed to the location noted.

Install the air intake elbow retaining bracket lower retaining bolts.

- Tighten to 20 Nm.

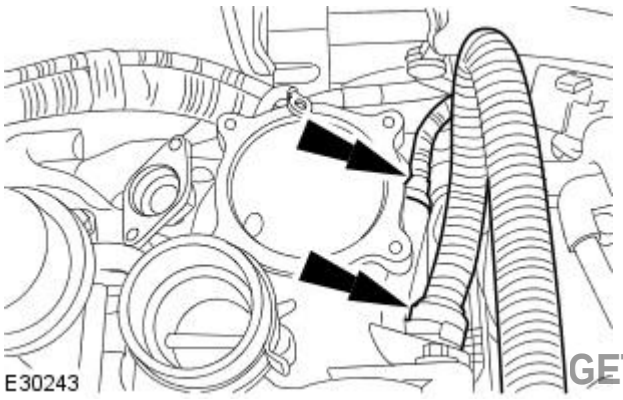


**5.** Connect the air intake elbow pipes.

GETtheMANUALS.org

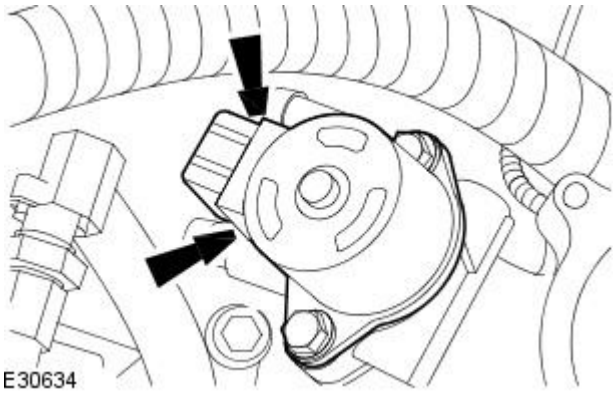


**6.** Install the EGR valve and the exhaust manifold to EGR valve tube.

- Install a new exhaust manifold to EGR valve tube gasket.
- Install a new EGR valve to air intake elbow gasket.
- Tighten to 10 Nm.

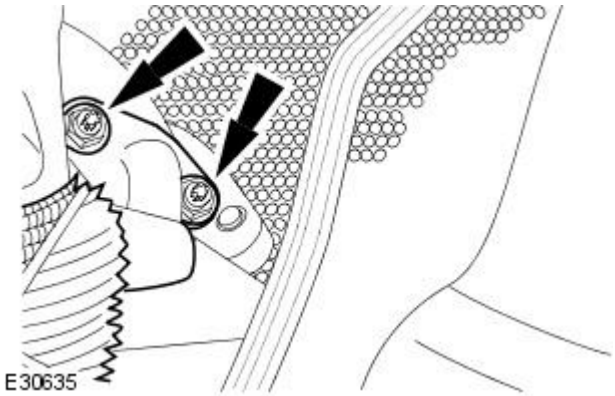


**7.** Tighten to 21 Nm.

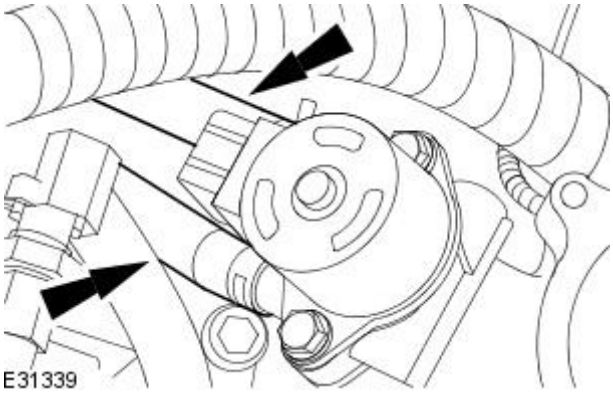


**8.** NOTE: Un-cap the exposed ports.

Connect the coolant hoses.

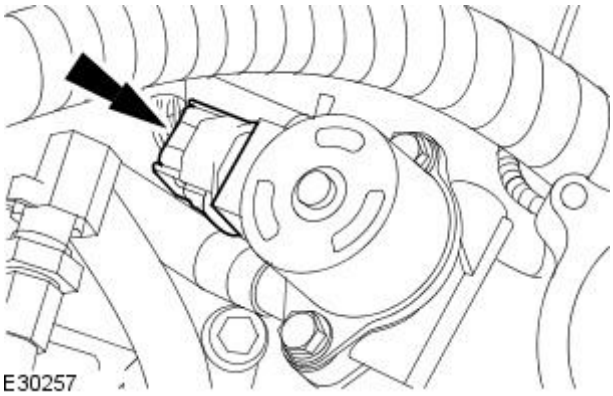


**9.** Connect the exhaust gas recirculation (EGR) valve electrical connector.

**10.** Connect the IAT sensor electrical connector.

GETtheMANUALS.org

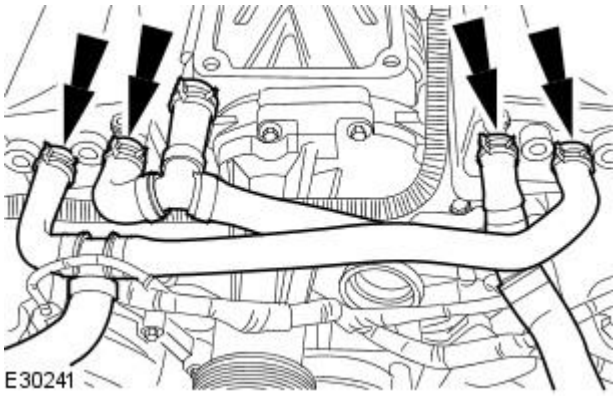


**11.** Connect the charge air cooler coolant pipes.

**12.** Install new O-ring seals to the thermostat housing.

**13.** Install thermostat housing.

**14.** Tighten to 10 Nm.

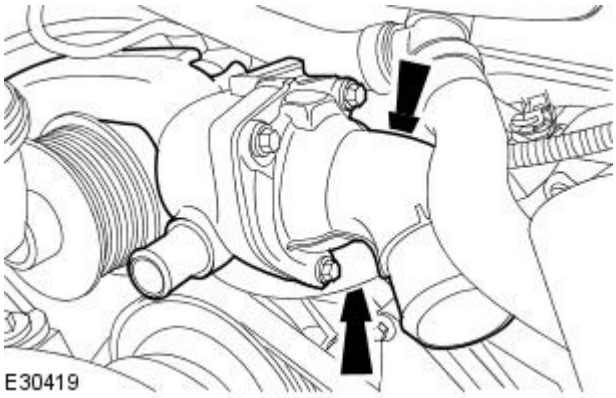


**15.** Tighten to 10 Nm.

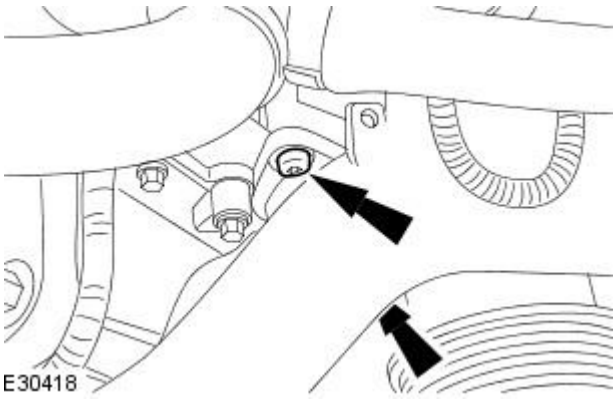


**16.** Connect the hose.

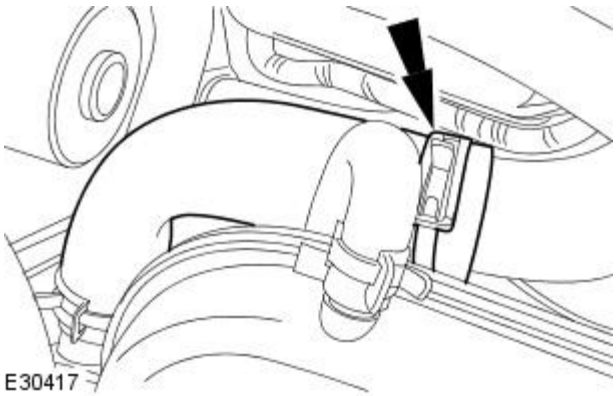


GETtheMANUALS.org

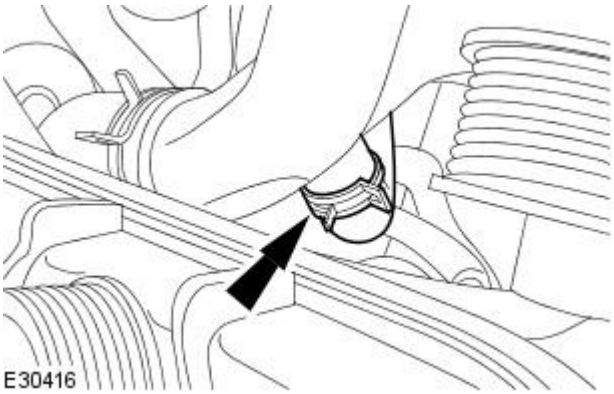


**17.** Connect the hose.

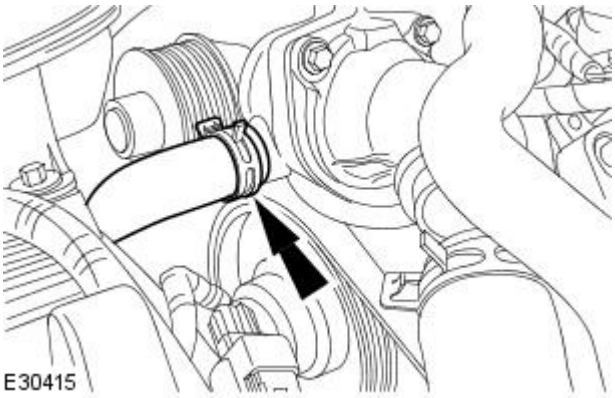


**18.** Connect the hose.

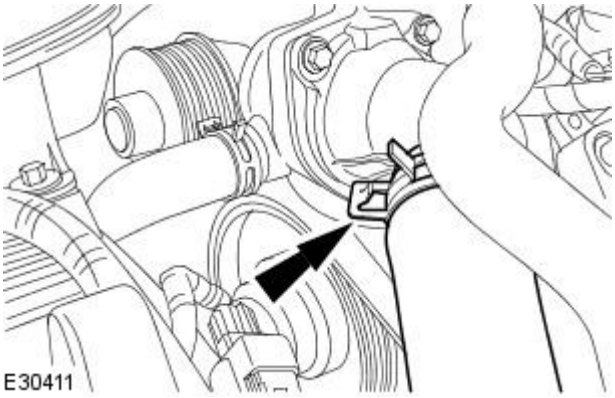


**19.** Connect the hose.

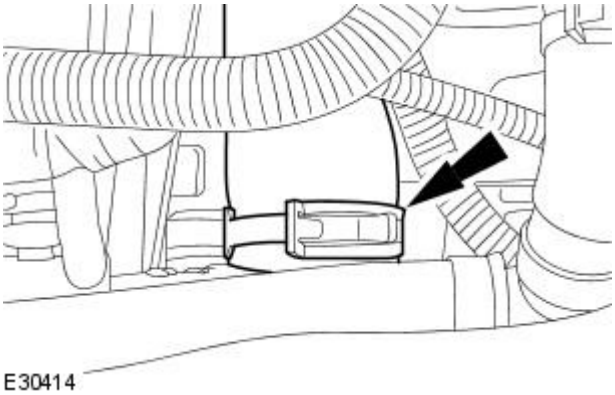


**20.** Reposition the thermostat housing hose retaining clip.

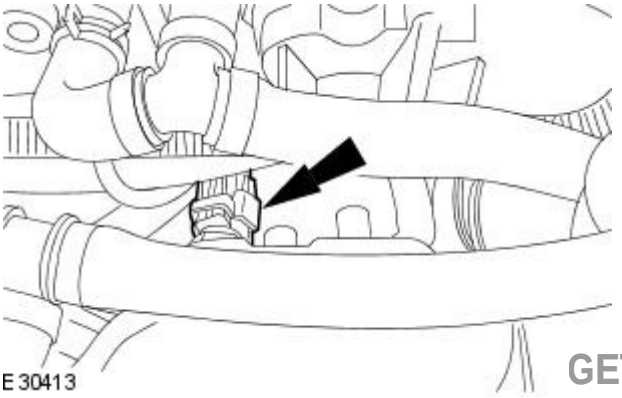


**21.** Connect the coolant temperature sensor electrical connector.

GETtheMANUALS.org

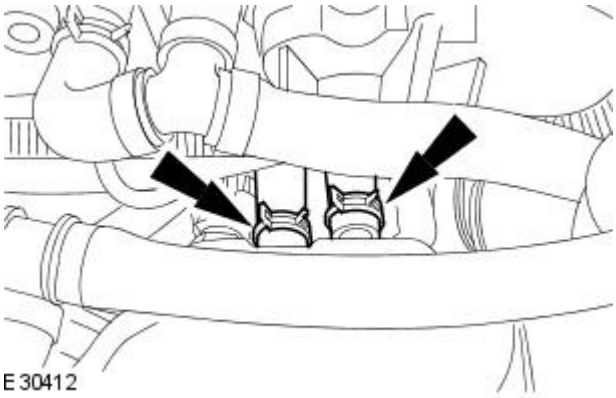


**22.** Connect the thermostat housing hoses

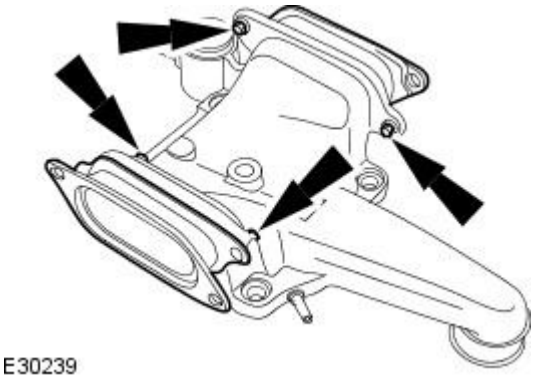


**23.** Install new supercharger outlet pipe to charge air coolers ducts.

- Tighten to 8 Nm.

**24.** Install a new supercharger outlet pipe gasket.

**25.** Install new seals to the supercharger outlet pipe retaining bolts

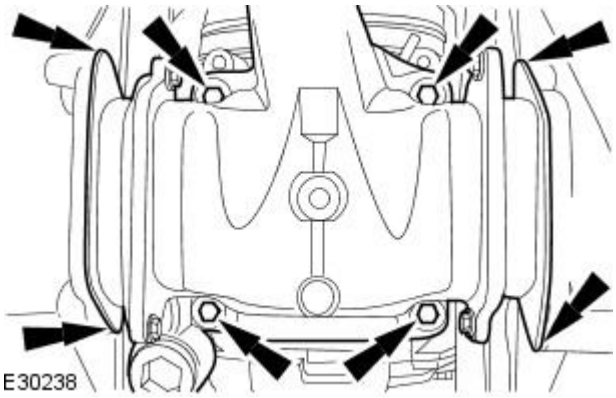


**26.** CAUTION: Make sure no foreign matter enters the supercharger.

Install the supercharger outlet pipe

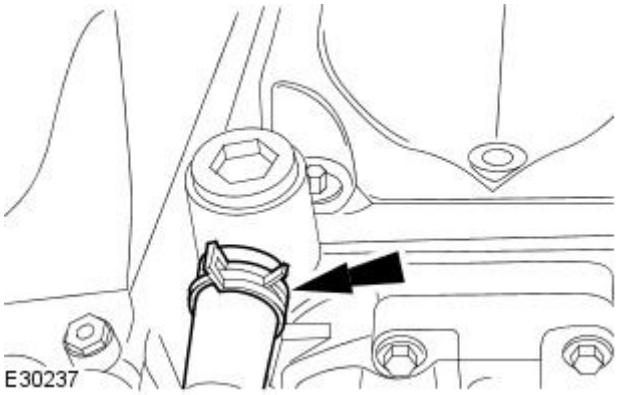


**27.** NOTE: Un-cap the coolant ports.

Attach the supercharger outlet pipe coolant hose.

GETtheMANUALS.org

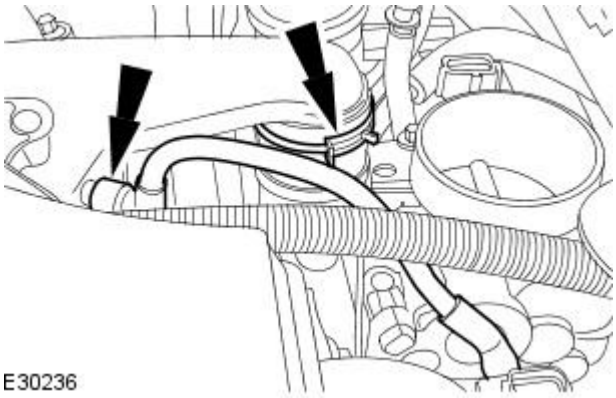


**28.** Attach the hoses.

- Reposition the hose retaining clip.

**29.** Install the throttle body.
For additional information, refer to: Throttle Body - Vehicles With: Supercharger, VIN Range: M45255->N52047 (303-04B Fuel Charging and Controls - V8 4.2L Petrol/V8 S/C 4.2L Petrol, Removal and Installation).

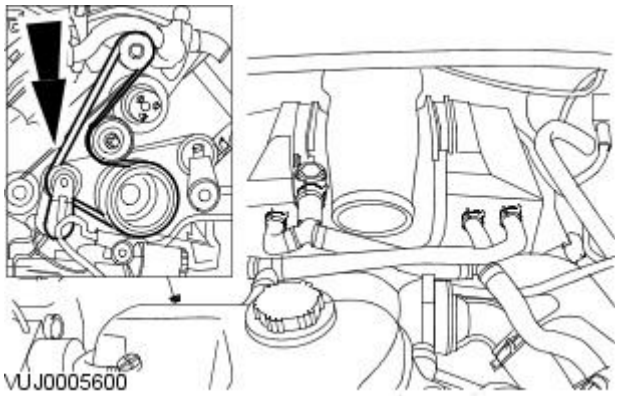


**30.** Attach the supercharger belt.

- Use a 1/2 inch square drive bar to rotate the supercharger belt tensioner.
- Attach the supercharger belt.

**31.** Connect the battery ground cable.
For additional information, refer to: Battery Disconnect and Connect (414-01 Battery, Mounting and Cables, General Procedures).

**32.** Carry out the supercharing cooling system filling and bleeding procedure.
For additional information, refer to: Supercharger Cooling System Draining, Filling and Bleeding (303-03B Supercharger Cooling, General Procedures).

GETtheMANUALS.org

# Intake Air Distribution and Filtering - V8 4.2L Petrol/V8 S/C 4.2L Petrol - SuperchargerVIN Range: N52048->N99999

Removal and Installation

## Removal

1. Disconnect the battery ground cable.
   For additional information, refer to: Battery Disconnect and Connect (414-01 Battery, Mounting and Cables, General Procedures).
2. Carry out the cooling system draining procedure.
   For additional information, refer to: Cooling System Draining, Filling and Bleeding (303-03A Engine Cooling - V8 4.2L Petrol/V8 S/C 4.2L Petrol/2.5L NA V6 - AJV6/3.0L NA V6 - AJ27, General Procedures).
3. Remove the coolant expansion tank.
   For additional information, refer to: Coolant Expansion Tank (303-03A Engine Cooling - V8 4.2L Petrol/V8 S/C 4.2L Petrol/2.5L NA V6 - AJV6/3.0L NA V6 - AJ27, Removal and Installation).
4. Remove the air cleaner outlet pipe.
   For additional information, refer to: Air Cleaner Outlet Pipe (303-12B Intake Air Distribution and Filtering - V8 4.2L Petrol/V8 S/C 4.2L Petrol, Removal and Installation).
5. Detach the supercharger belt.
   - Use a 1/2 inch square drive bar to rotate the supercharger belt tensioner.

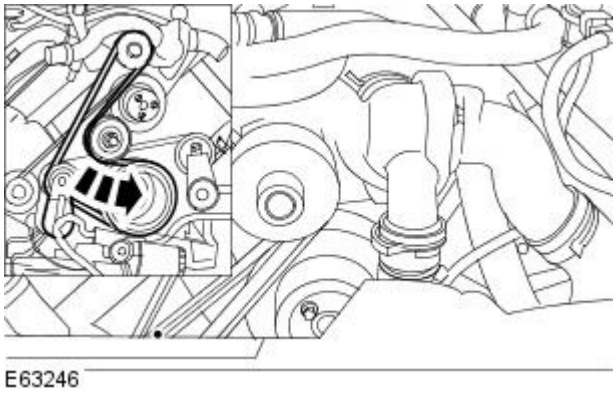
E63246

6. Detach the hoses.
   - Reposition the hose retaining clip.

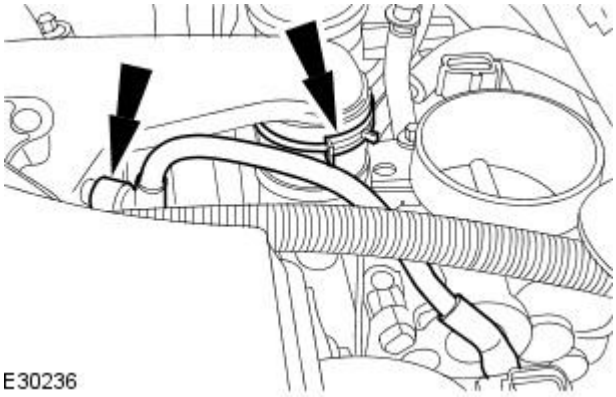
E30236

7. Remove the throttle body.
   For additional information, refer to: Throttle Body - Vehicles With: Supercharger, VIN Range: N52048->N99999 (303-04B Fuel Charging and Controls - V8 4.2L Petrol/V8 S/C 4.2L Petrol, Removal and Installation).
8. Detach the supercharger outlet pipe coolant hose.
   - Cap the coolant ports.

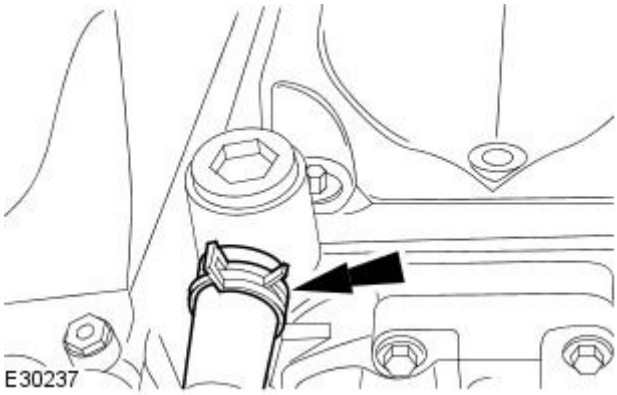
E30237

GETtheMANUALS.org

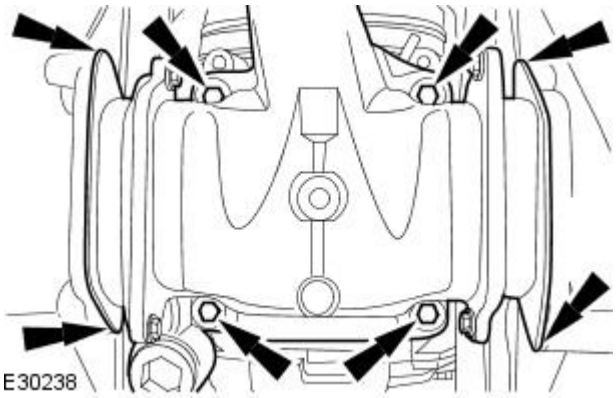


**9.** CAUTION: Make sure no foreign matter enters the supercharger.

Remove the supercharger outlet pipe.

**10.** Remove and discard the supercharger outlet pipe gasket.

**11.** Remove and discard the supercharger outlet pipe retaining bolt seals.

**12.** Remove and discard the supercharger outlet pipe to charge air coolers ducts.

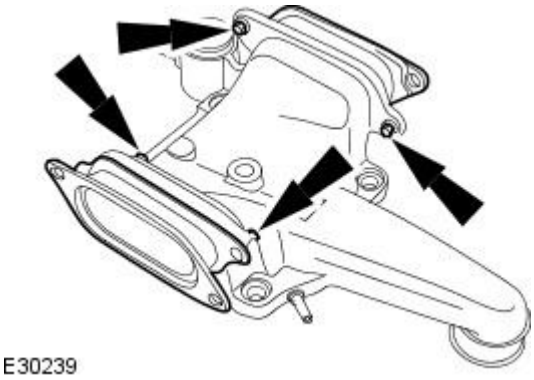


**13.** Disconnect the coolant hose.

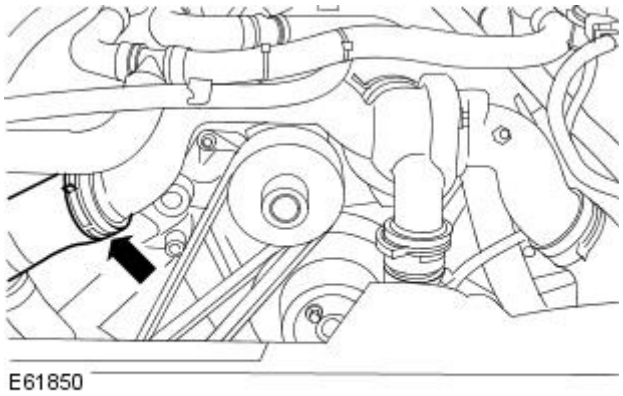


**14.** Disconnect the coolant hose.

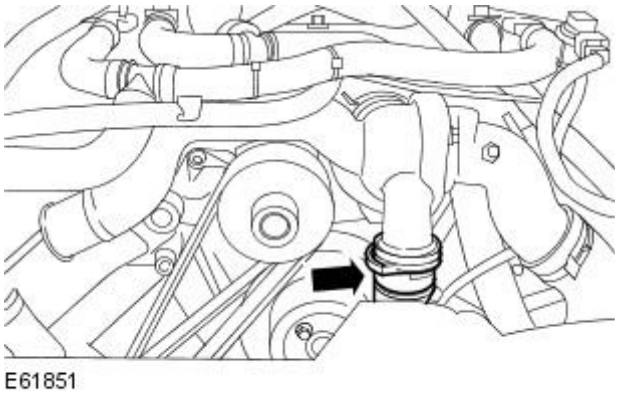


GETtheMANUALS.org

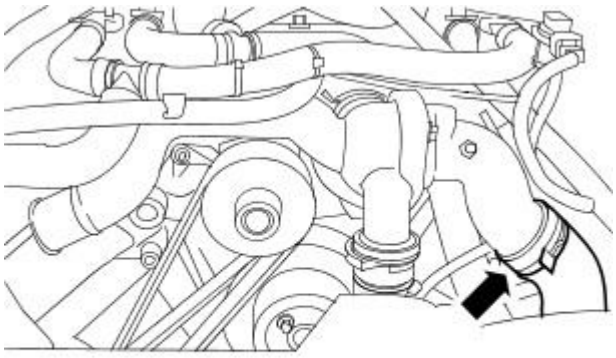

E61852

**15.** Disconnect the coolant hose.

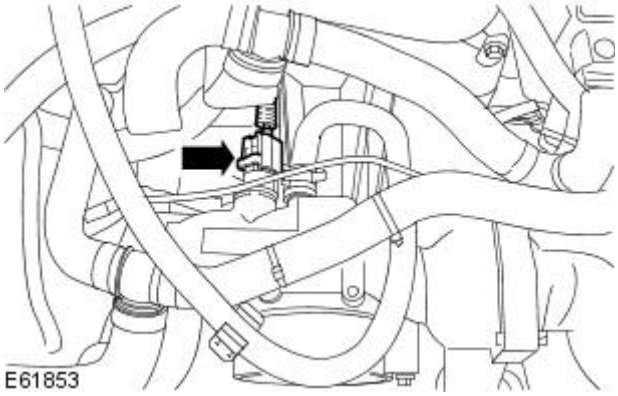

E61853

**16.** Disconnect the engine coolant temperature (ECT) sensor electrical connector.

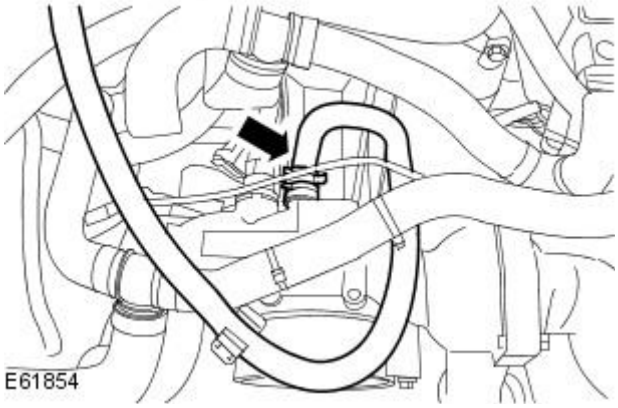

E61854

**17.** Disconnect the coolant hose.

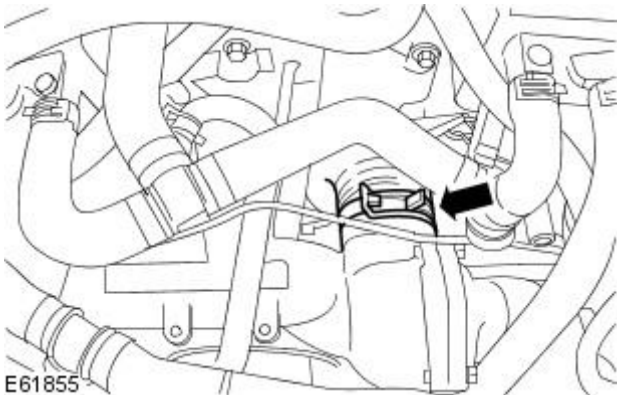

E61855

**18.** Disconnect the coolant hose.

GETtheMANUALS.org

**19.** Detach the coolant assembly.

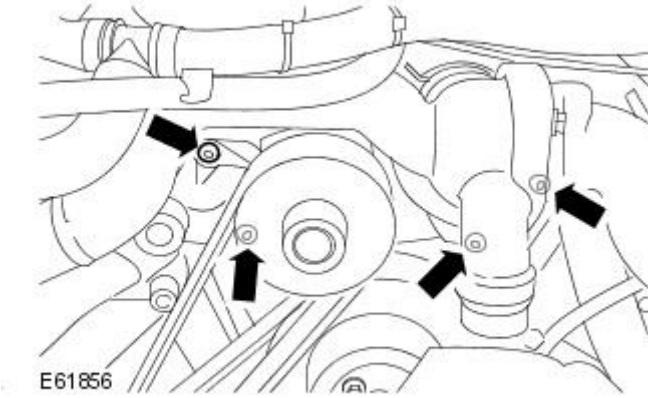


**20.** Remove the coolant assembly.

- Disconnect the coolant hose.
- Remove and discard the O-ring seals.

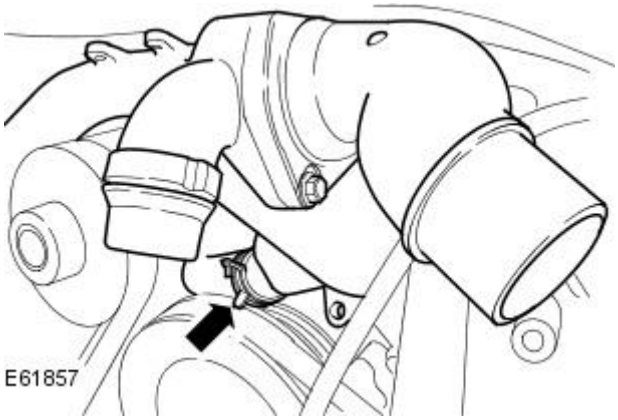


**21.** Disconnect the charge air cooler coolant hoses.

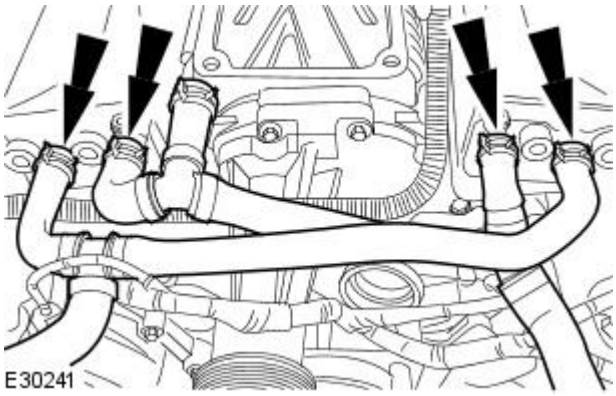


**22.** Disconnect the intake air temperature (IAT) sensor electrical connector.

GETtheMANUALS.org

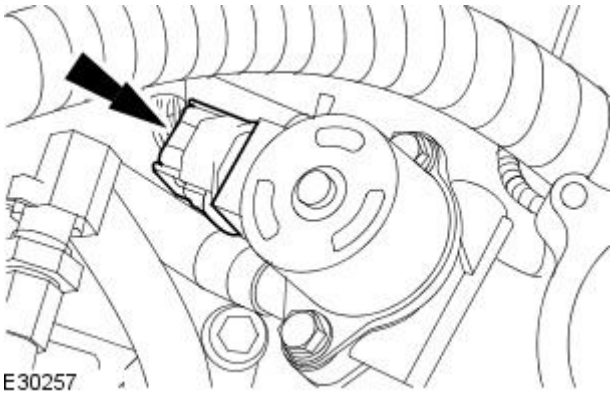


**23.** Disconnect the exhaust gas recirculation (EGR) valve electrical connector.

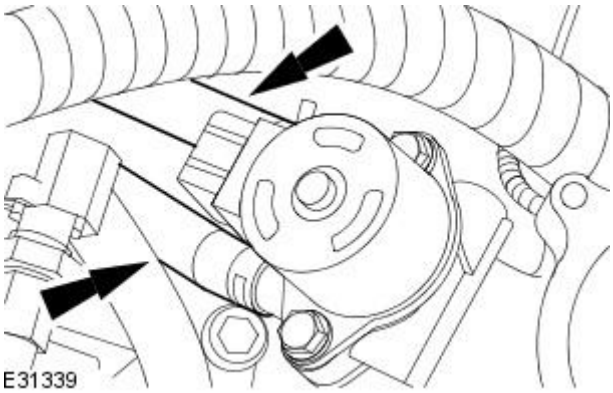


**24.** NOTE: Cap the exposed ports.

Disconnect the coolant hoses.

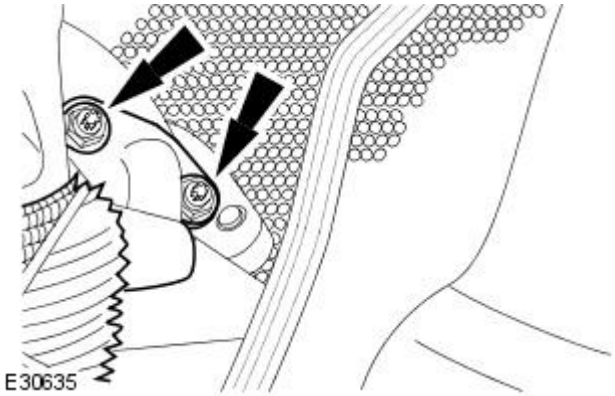


**25.** Remove the exhaust manifold to EGR valve tube retaining nuts.

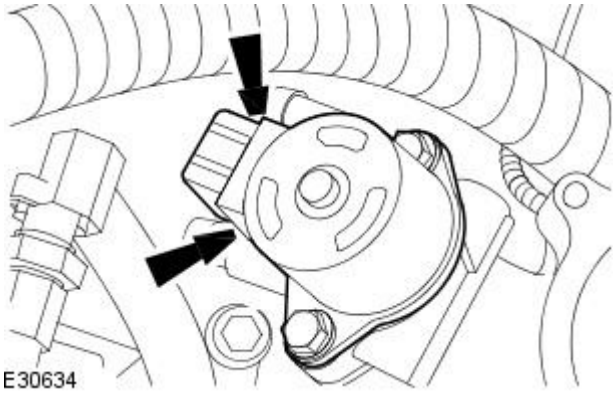


**26.** Remove the EGR valve and the exhaust manifold to EGR valve tube.

- Remove the retaining bolts.
- Remove and discard the exhaust manifold to EGR valve tube gasket.
- Remove and discard the EGR valve to air intake elbow gasket.

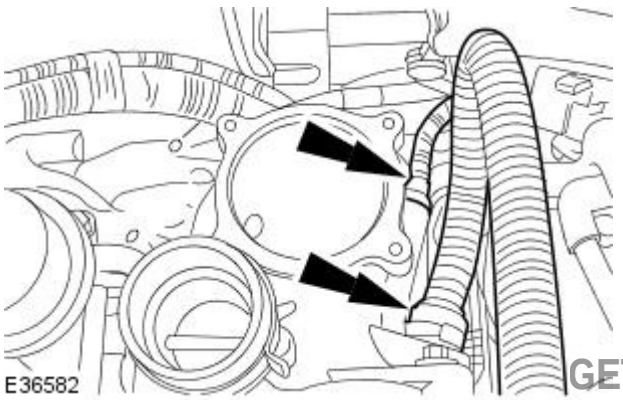


**27.** Disconnect the air intake elbow pipes.

GETtheMANUALS.org

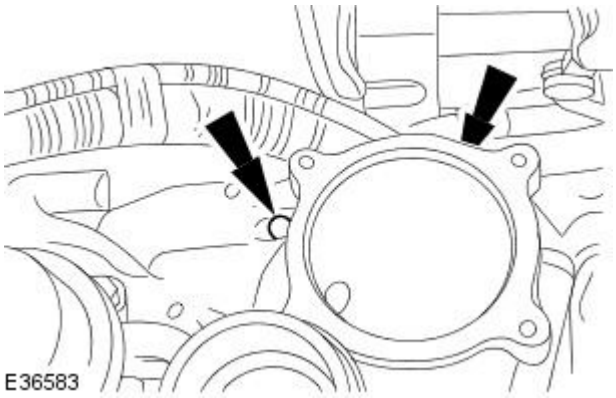


**28.** Remove the air intake elbow retaining bracket lower retaining bolts.

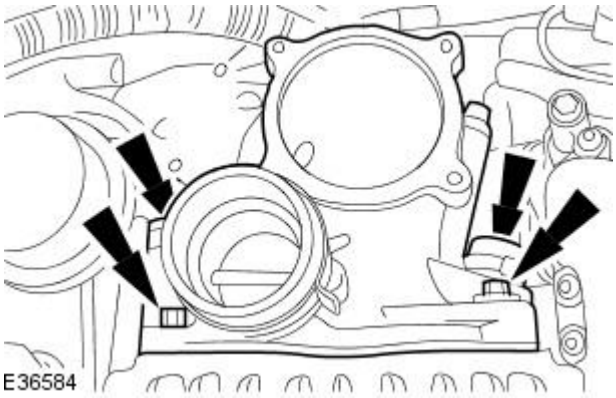


**29.** Detach the air intake elbow.

- Remove and discard the gasket.
- Remove and discard the retaining bolt seals.

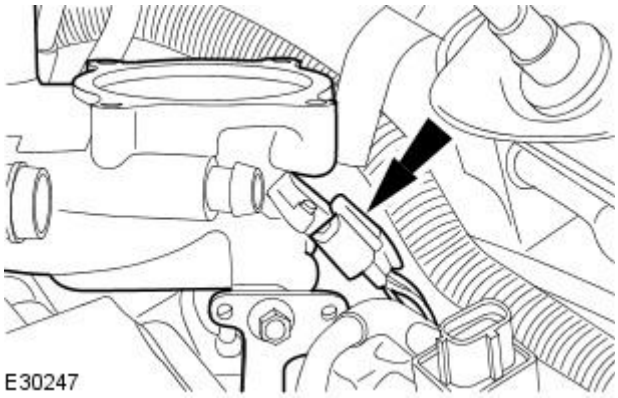


**30.** Remove the air intake elbow.

- Disconnect the manifold absolute pressure (MAP) sensor.

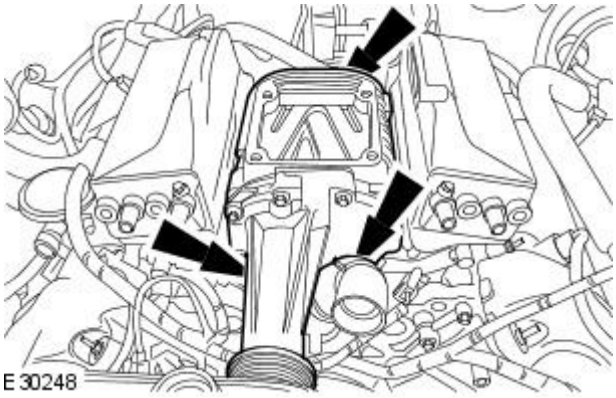


**31.** Remove the supercharger.

## Installation

GETtheMANUALS.org

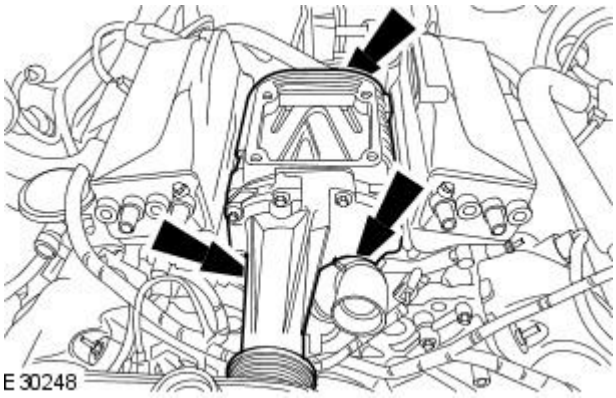


**1.** Install the supercharger.

- Tighten to 21 Nm.

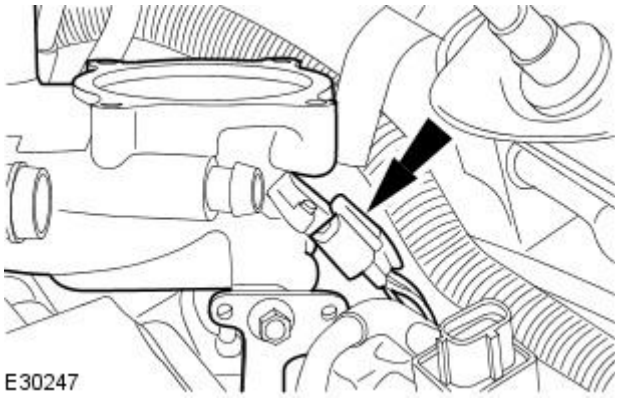


**2.** Connect the MAP sensor.

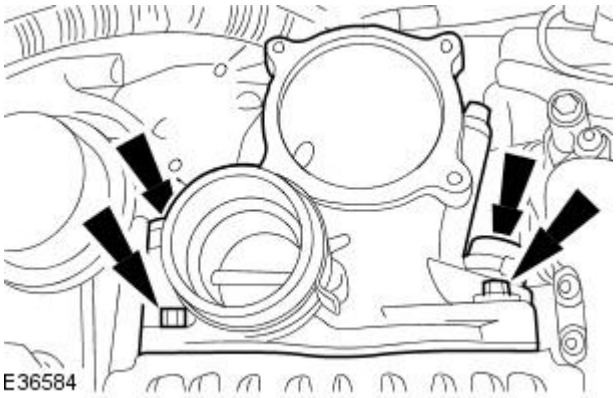


**3.** Install the air intake elbow.

- Install a new gasket.
- Install new retaining bolt seals.
- Tighten to 21 Nm.

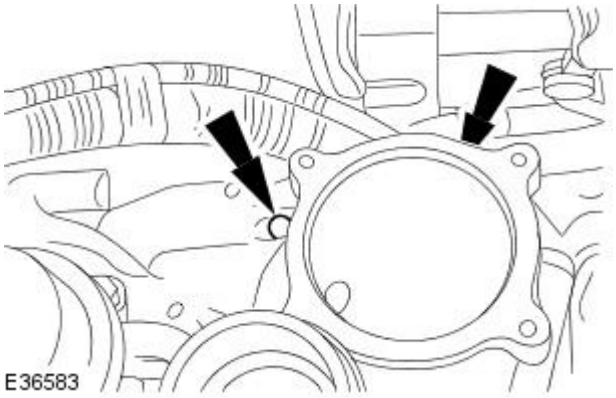


**4.** Install the air intake elbow retaining bracket lower retaining bolts.

- Tighten to 18 Nm.

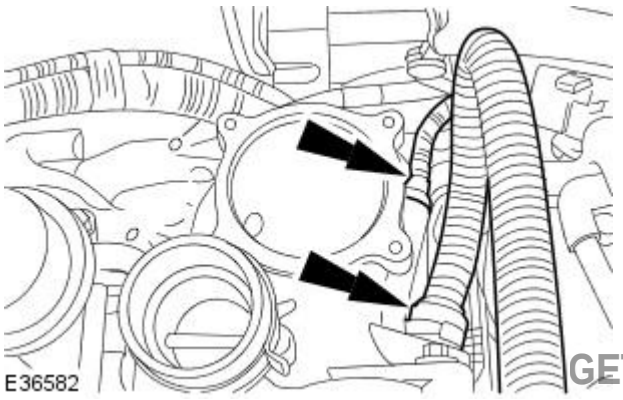


**5.** Connect the air intake elbow pipes.

GETtheMANUALS.org

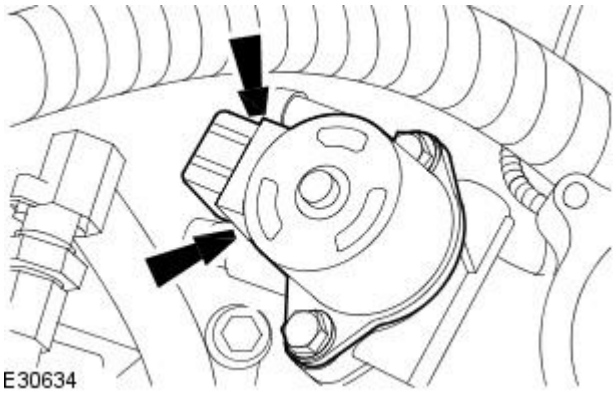


**6.** Install the EGR valve and the exhaust manifold to EGR valve tube.

- Install a new exhaust manifold to EGR valve tube gasket.
- Install a new EGR valve to air intake elbow gasket.
- Tighten to 10 Nm.

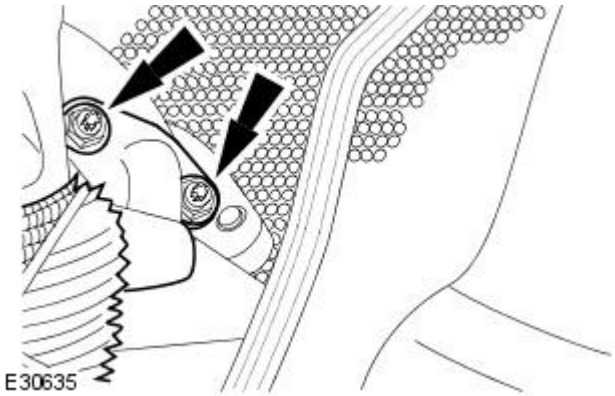


**7.** Install the exhaust manifold to EGR valve tube retaining nuts.

- Tighten to 21 Nm.

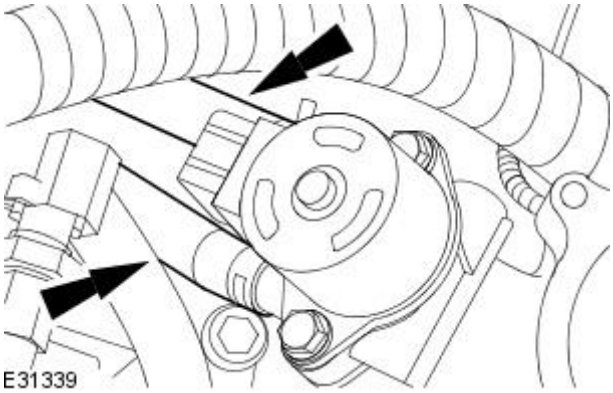


**8.** NOTE: Remove the blanking caps from the coolant ports.

Connect the coolant hoses.

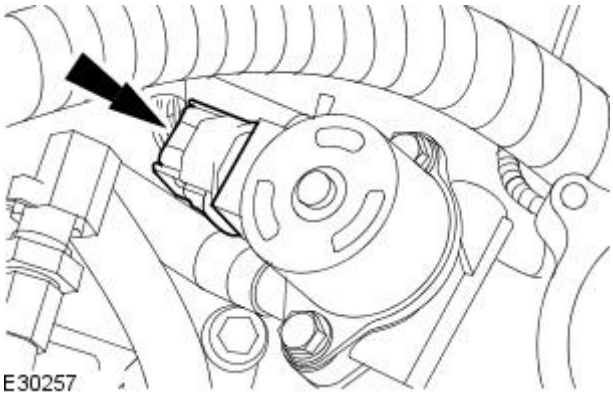


**9.** Connect the EGR valve electrical connector.

**10.** Connect the IAT sensor electrical connector.

GETtheMANUALS.org

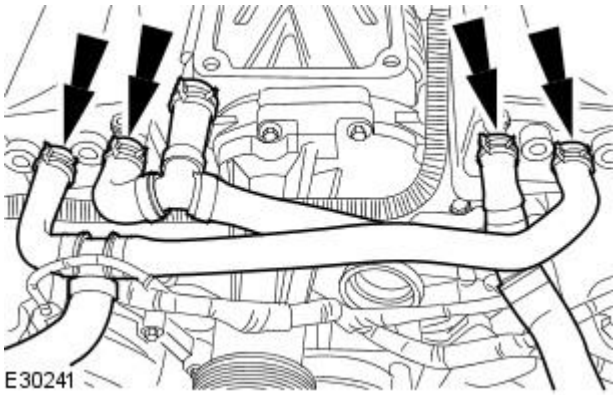


**11.** Connect the charge air cooler coolant hoses.

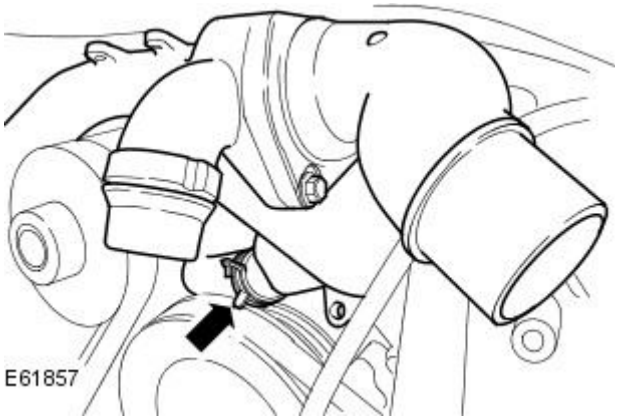


**12.** Install the coolant assembly.

- Install new O-ring seals.
- Connect the coolant hose.

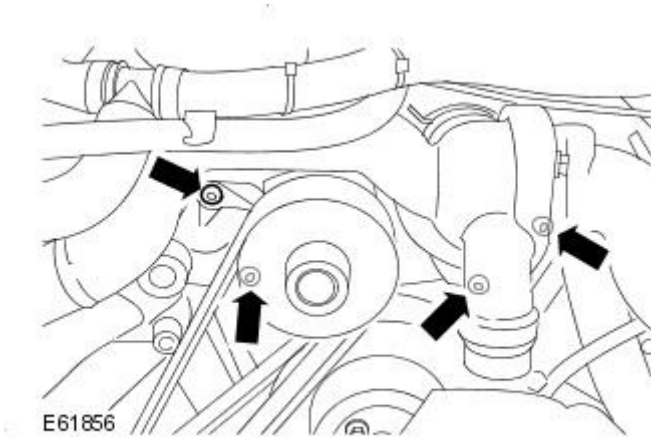


**13.** Attach the coolant assembly.

- Tighten to 10 Nm.

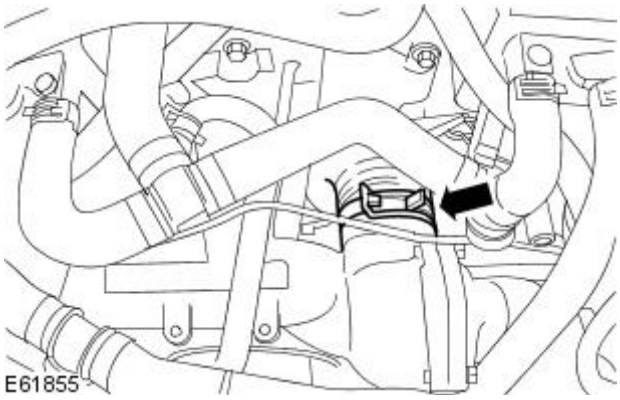


**14.** Connect the coolant hose.

GETtheMANUALS.org

**15.** Connect the coolant hose.

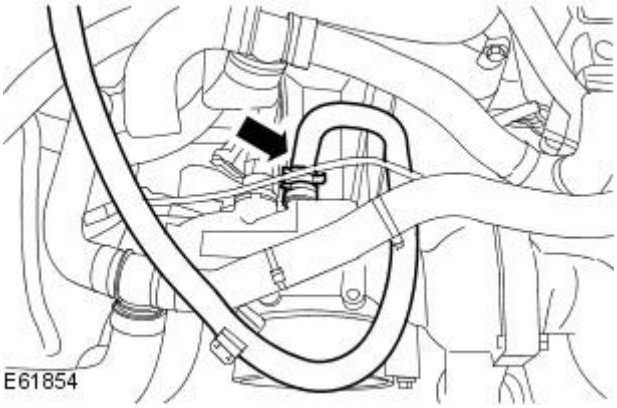


**16.** Connect the ECT sensor electrical connector.

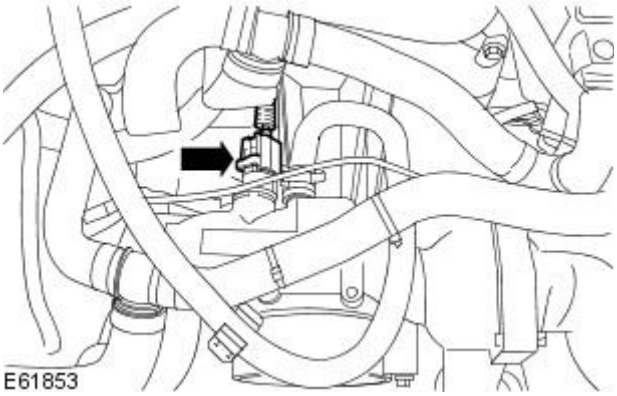


**17.** Connect the coolant hose.

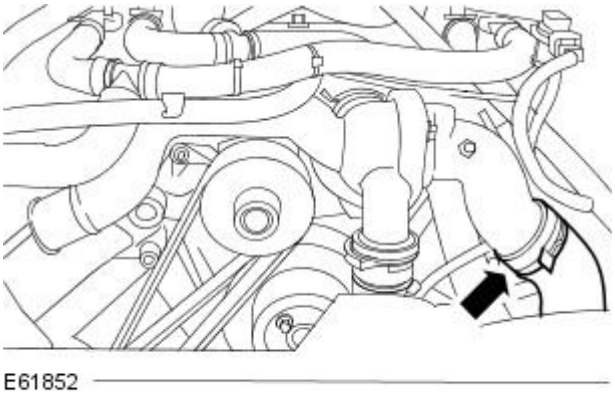


**18.** Connect the coolant hose.

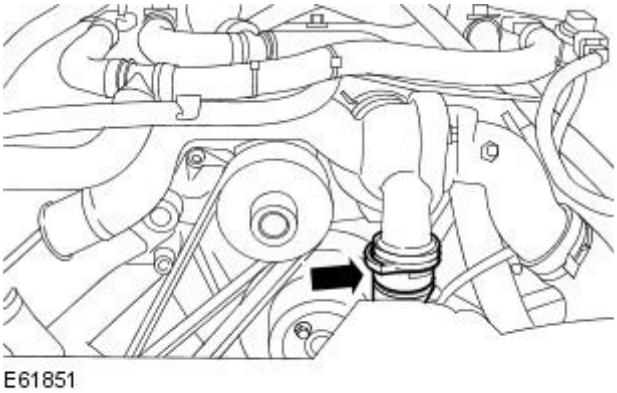


GETtheMANUALS.org

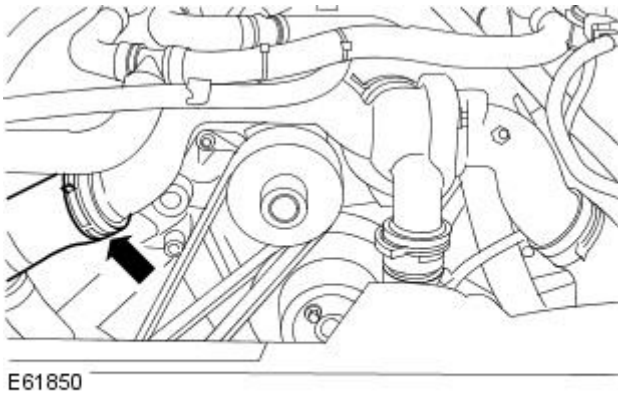


**19.** Connect the coolant hose.

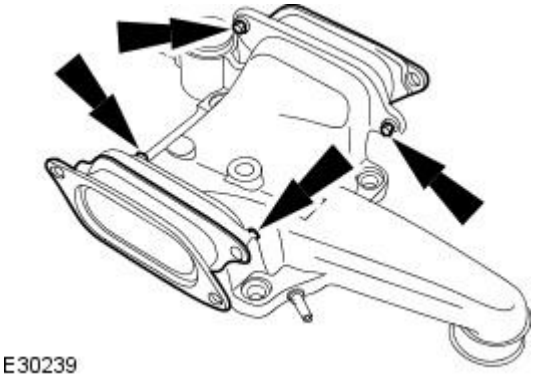


**20.** Install new supercharger outlet pipe to charge air coolers ducts.

- Tighten to 8 Nm.

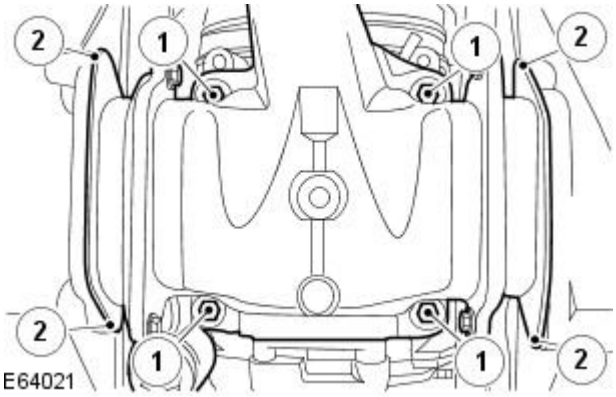


**21.** Install a new supercharger outlet pipe gasket.

**22.** Install new seals to the supercharger outlet pipe retaining bolts.

**23.** CAUTION: Make sure no foreign matter enters the supercharger.

Install the supercharger outlet pipe.

1. Tighten the supercharger outlet pipe retaining bolts to 10 Nm.
2. Tighten the charge air cooler ducts retaining bolts to 9 Nm.

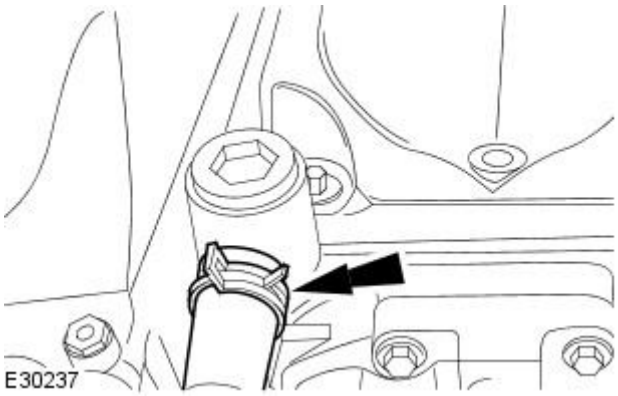


**24.** NOTE: Remove the blanking caps.

Attach the supercharger outlet pipe coolant hose.

**25.** Install the throttle body.
For additional information, refer to: Throttle Body - Vehicles With: Supercharger, VIN Range: N52048->N99999 (303-04B Fuel Charging and Controls - V8 4.2L Petrol/V8 S/C 4.2L Petrol, Removal and Installation).

GETtheMANUALS.org

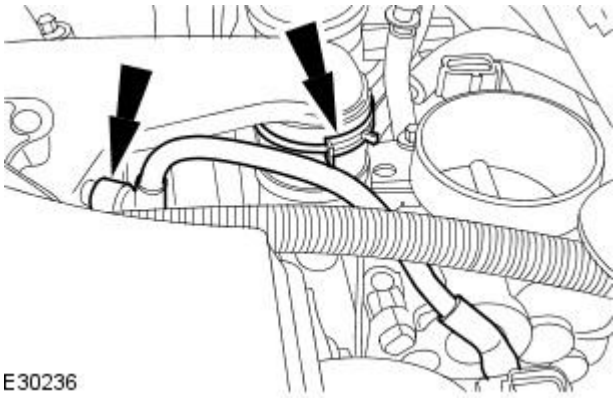


**26.** Attach the hoses.

- Reposition the hose retaining clip.

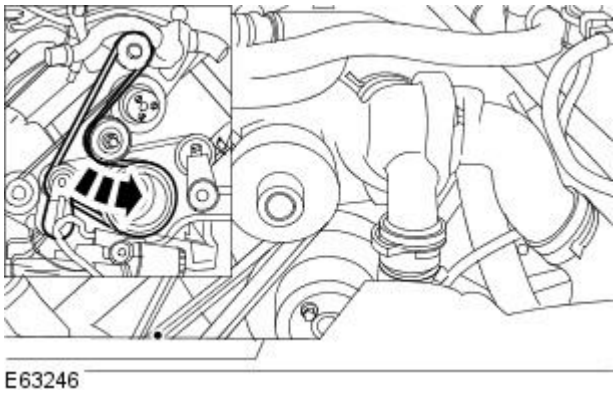


**27.** Attach the supercharger belt.

- Use a 1/2 inch square drive bar to rotate the supercharger belt tensioner.

**28.** Install the air cleaner outlet pipe.
For additional information, refer to: Air Cleaner Outlet Pipe (303-12B Intake Air Distribution and Filtering - V8 4.2L Petrol/V8 S/C 4.2L Petrol, Removal and Installation).

**29.** Install the coolant expansion tank.
For additional information, refer to: Coolant Expansion Tank (303-03A Engine Cooling - V8 4.2L Petrol/V8 S/C 4.2L Petrol/2.5L NA V6 - AJV6/3.0L NA V6 - AJ27, Removal and Installation).

**30.** Connect the battery ground cable.
For additional information, refer to: Battery Connect (414-01 Battery, Mounting and Cables, General Procedures).

**31.** Carry out the cooling system filling and bleeding procedure.
For additional information, refer to: Cooling System Draining, Filling and Bleeding (303-03A Engine Cooling - V8 4.2L Petrol/V8 S/C 4.2L Petrol/2.5L NA V6 - AJV6/3.0L NA V6 - AJ27, General Procedures).

GETtheMANUALS.org

# Intake Air Distribution and Filtering - V8 4.2L Petrol/V8 S/C 4.2L Petrol - Supercharger Outlet Pipe

Removal and Installation

## Removal

1. Disconnect the battery ground cable.
   For additional information, refer to: Battery Disconnect and Connect (414-01 Battery, Mounting and Cables, General Procedures).
2. Remove the cowl vent screen.
   For additional information, refer to: Cowl Panel Grille (501-02 Front End Body Panels, Removal and Installation).
3. Remove the air cleaner outlet pipe.
   For additional information, refer to: Air Cleaner Outlet Pipe (303-12B Intake Air Distribution and Filtering - V8 4.2L Petrol/V8 S/C 4.2L Petrol, Removal and Installation).
4. Remove the throttle body intake pipe.

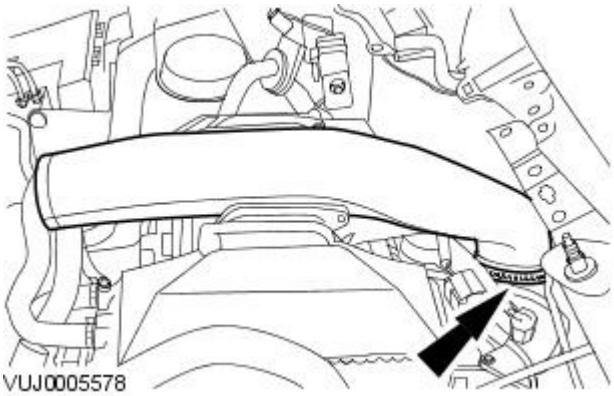


5. Detach the hoses.
   - Reposition the hose retaining clip.

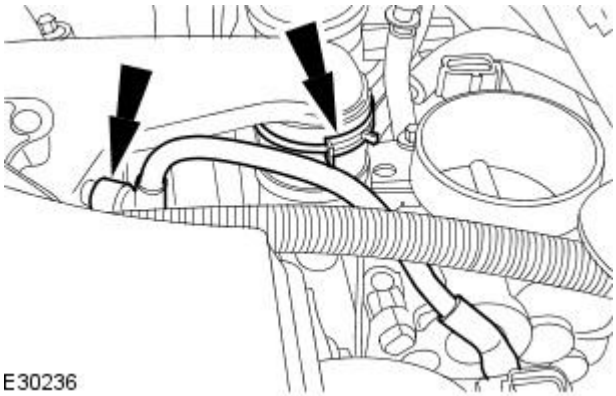


6. WARNING: Make sure the cooling system is not pressurized.

   Detach the supercharger outlet pipe coolant hose.
   - Cap the coolant ports.

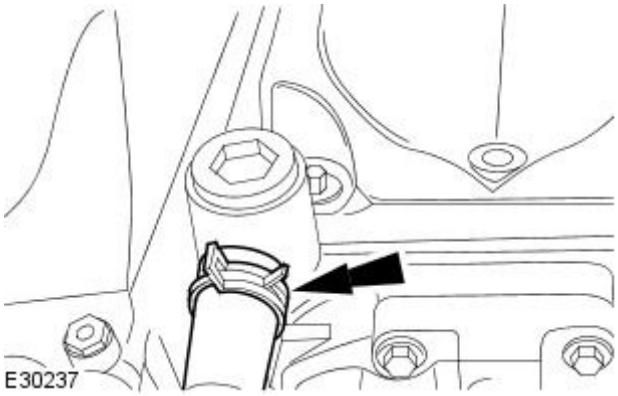


GETtheMANUALS.org

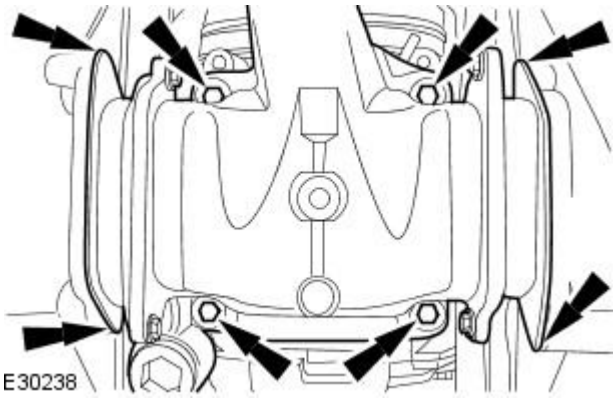


7. CAUTION: Make sure no foreign matter enters the supercharger.

Remove the supercharger outlet pipe

8. Remove and discard the supercharger outlet pipe gasket.
9. Remove and discard the supercharger outlet pipe retaining bolt seals.
10. Remove and discard both supercharger outlet pipe to charge air cooler ducts.

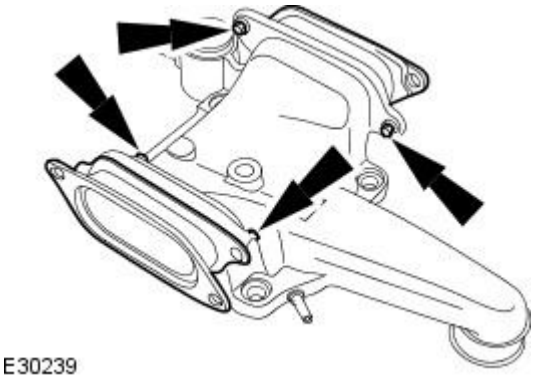


## Installation

1. Install new supercharger outlet pipe to charge air cooler ducts.
   - Tighten to 8 Nm.

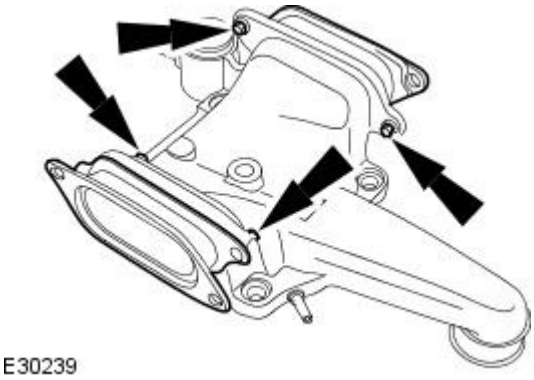


2. Install a new supercharger outlet pipe gasket.
3. Install new seals to the supercharger outlet pipe retaining bolts
4. Install the supercharger outlet pipe
   - Tighten to 9 Nm.

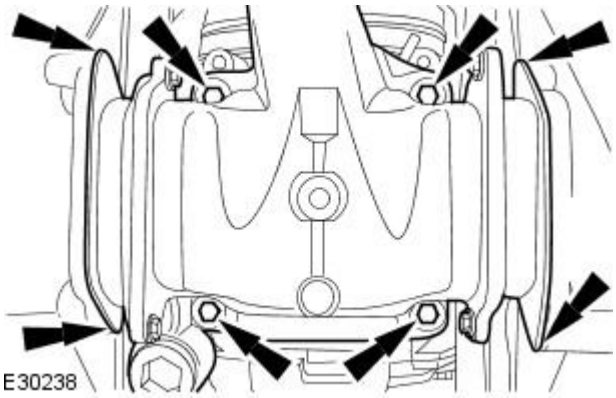


GETtheMANUALS.org

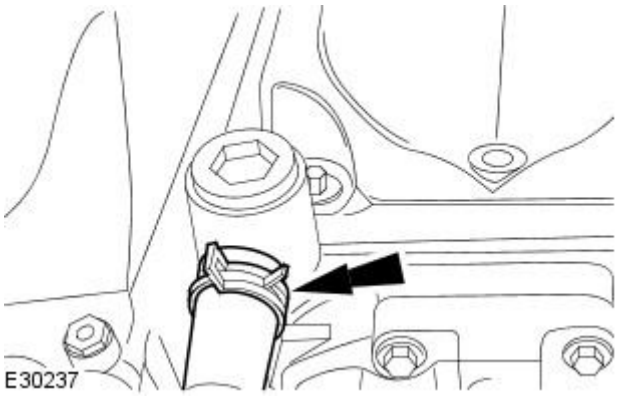


**5.** NOTE: Un-cap the coolant ports.

Attach the supercharger outlet pipe coolant hose.

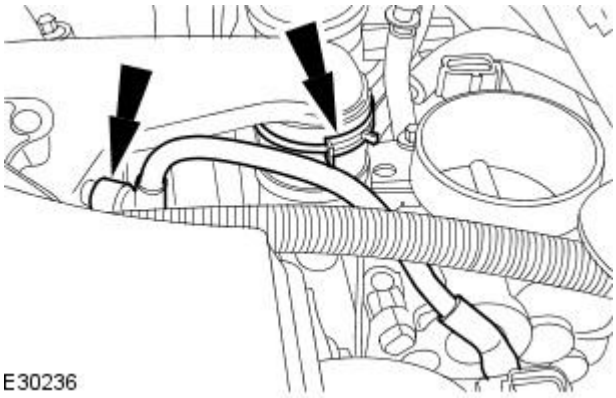


**6.** Attach the hoses.

- Reposition the hose retaining clip.

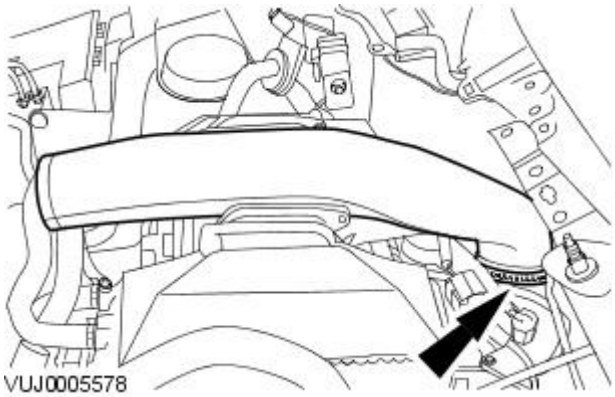


**7.** Install the throttle body intake pipe.

- Tighten to 5 Nm.

**8.** Install the air cleaner outlet pipe.
For additional information, refer to: Air Cleaner Outlet Pipe (303-12B Intake Air Distribution and Filtering - V8 4.2L Petrol/V8 S/C 4.2L Petrol, Removal and Installation).

**9.** Install the cowl vent screen.
For additional information, refer to: Cowl Panel Grille (501-02 Front End Body Panels, Removal and Installation).

**10.** Connect the battery ground cable.
For additional information, refer to: Battery Disconnect and Connect (414-01 Battery, Mounting and Cables, General Procedures).

**11.** Check and top up the coolant expansion tank.

GETtheMANUALS.org

# Intake Air Distribution and Filtering - 2.7L V6 - TdV6 -

**Torque Specifications**

| Description | Nm | lb-ft | lb-in |
|---|---|---|---|
| Air cleaner retaining bolt | 8 | - | 71 |

GETtheMANUALS.org

# Intake Air Distribution and Filtering - 2.7L V6 - TdV6 - Intake Air Distribution and Filtering

Description and Operation

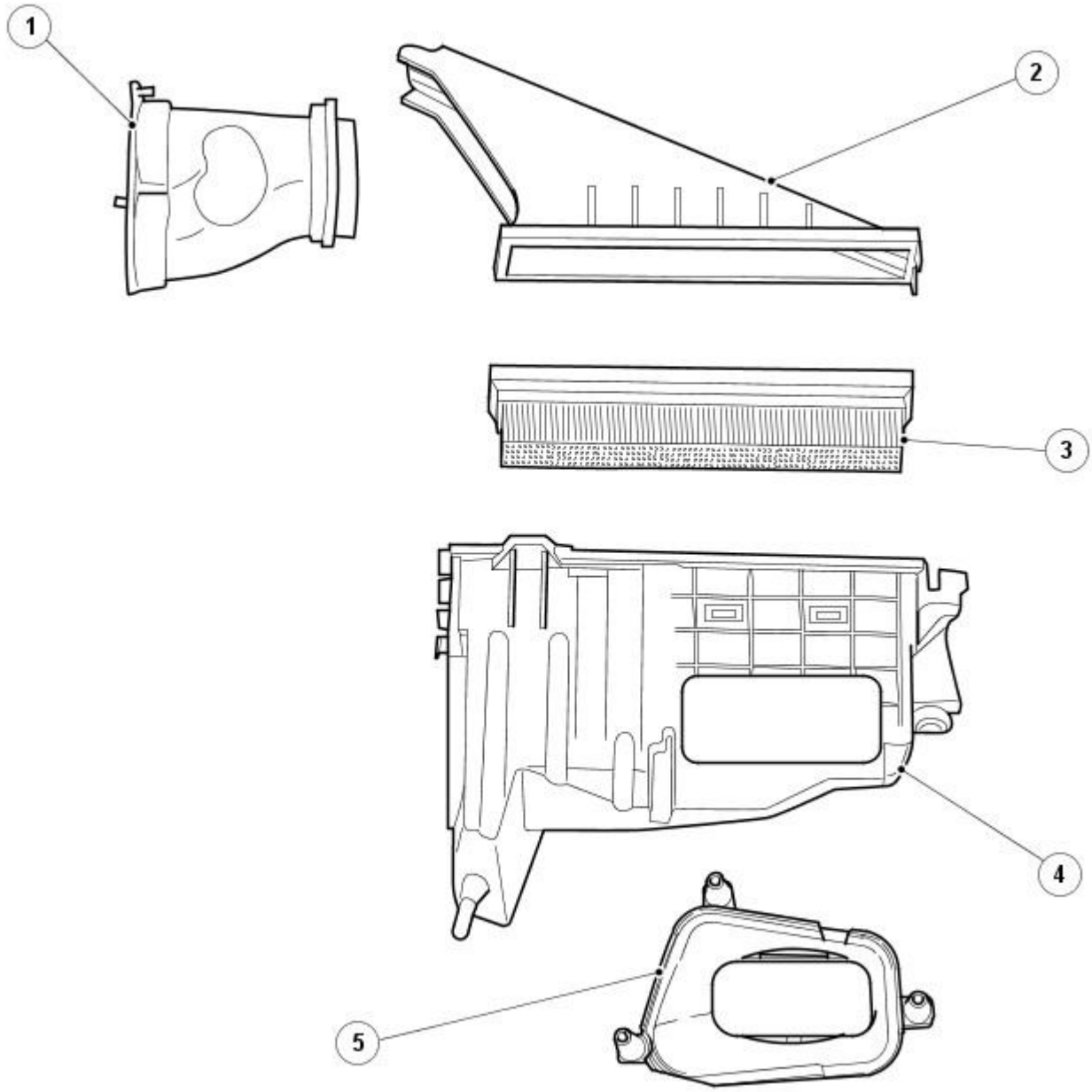


E66075

| Item | Part Number | Description |
|---|---|---|
| 1 | — | Air cleaner outlet pipe |
| 2 | — | Air cleaner cover |
| 3 | — | Air cleaner element |
| 4 | — | Air cleaner base |
| 5 | — | Air cleaner intake pipe |

• NOTE: The air cleaner outlet pipe and air cleaner cover are only supplied as an assembly and must not be disassembled.

The primary functional requirements of the air induction system is to:

- deliver clean filtered air to the engine with minimum pressure loss.
- to reduce the engine intake and structure related noises to within legal & vehicle requirements.
- manage the induction of water, sand or snow to prevent adverse effect on vehicle operation.
- minimize air temperature rise over ambient air temperature at the throttle body/turbo in high ambient conditions.
- purge the hot air from the intake system quickly whilst the engine is hot, and after a period of rest. This is to maximize engine drive away performance.

GETtheMANUALS.org

# Intake Air Distribution and Filtering - 2.7L V6 - TdV6 - Intake Air Distribution and Filtering

Diagnosis and Testing

## Inspection and Verification

1. **1.** Verify the customer concern.
2. **2.** Visually inspect for obvious signs of damage.

**Visual inspection chart**

| Mechanical | Electrical |
|---|---|
| • Hoses and ducts (damage/connections)<br>• Air cleaner element (contaminated/blocked)<br>REFER to: Air Cleaner Element (303-12C Intake Air Distribution and Filtering - 2.7L V6 - TdV6, Removal and Installation).<br>• Restricted air intake<br>• Vacuum hoses<br>• Pipework to turbochargers<br>• Turbochargers<br>REFER to: Turbocharger (303-04D Fuel Charging and Controls - Turbocharger - 2.7L V6 - TdV6, Description and Operation).<br>• Charge air coolers (contaminated/blocked) | • Mass air flow (MAF) sensors,<br>REFER to: Mass Air Flow (MAF) Sensor (303-14C Electronic Engine Controls - 2.7L V6 - TdV6, Removal and Installation).<br>• Intake air shut-off throttle solenoid,<br>REFER to: Intake Air Shutoff Throttle (303-04C Fuel Charging and Controls - 2.7L V6 - TdV6, Removal and Installation).<br>• Harness (security/damage)<br>• Connections (security/damage) |

## Symptom chart

| Symptom | Possible cause | Action |
|---|---|---|
| Vehicle does not start/hard starting/poor performance | • Restricted/blocked air intake<br>• Restricted/blocked air cleaner element<br>• Turbocharger fault<br>• Throttle body fault | Clear the restriction,<br>REFER to: Air Cleaner (303-12C Intake Air Distribution and Filtering - 2.7L V6 - TdV6, Removal and Installation).<br>Replace the air cleaner element as necessary,<br>REFER to: Air Cleaner Element (303-12C Intake Air Distribution and Filtering - 2.7L V6 - TdV6, Removal and Installation).<br>Check the turbochargers,<br>REFER to: Turbocharger (303-04D Fuel Charging and Controls - Turbocharger - 2.7L V6 - TdV6, Diagnosis and Testing).<br>Check the throttle body function (make sure the throttle body returns to the open position),<br>REFER to: Intake Air Shutoff Throttle (303-04C Fuel Charging and Controls - 2.7L V6 - TdV6, Removal and Installation). |
| Excessive intake noise | • Compressed intake air leak after the turbocharger<br>• Intake pipe disconnected/damaged after the air cleaner<br>• Air cleaner assembly incorrectly assembled/damaged | Check the joint between the air intake elbow and the throttle body,<br>REFER to: Air Cleaner Outlet Pipe (303-12C Intake Air Distribution and Filtering - 2.7L Diesel, Removal and Installation).<br>Check the joints between the throttle body outlets and the intake manifolds,<br>REFER to: Intake Air Shutoff Throttle (303-04C Fuel Charging and Controls - 2.7L V6 - TdV6, Removal and Installation).<br>Check the charge air cooler seals,<br>REFER to: Charge Air Cooler (303-12C Intake Air Distribution and Filtering - 2.7L V6 - TdV6, Removal and Installation).<br>Check the intake system and hoses for correct installation/damage,<br>REFER to: Air Cleaner (303-12C Intake Air Distribution and Filtering - 2.7L V6 - TdV6, Removal and Installation). |
| Excessive combustion noise | • Camshaft cover control valves | For control valve tests, GO to Pinpoint Test A. |

## DTC index

| DTC | Description | Possible cause | Action |
|---|---|---|---|
| P0097 | Intake air temperature (IAT) 2 sensor circuit | • IAT2 sensor circuit: low input | For intake air temperature sensor tests,<br>REFER to: Electronic Engine Controls (303-14C Electronic Engine Controls - 2.7L V6 - TdV6, Diagnosis and Testing). |
| P0098 | Intake air temperature (IAT) 2 sensor circuit | • IAT2 sensor circuit: high input | For intake air temperature sensor tests,<br>REFER to: Electronic Engine Controls (303-14C Electronic Engine Controls - 2.7L V6 - TdV6, Diagnosis and Testing). |
| P0099 | Intake air temperature (IAT) 2 sensor circuit | • IAT2 sensor circuit: intermittent/erratic | For intake air temperature sensor tests,<br>REFER to: Electronic Engine Controls (303-14C Electronic Engine Controls - 2.7L V6 - TdV6, Diagnosis and Testing). |
| P2008 | Intake manifold runner control circuit, right-hand bank | • Intake manifold runner control circuit: high resistance | No information available. |
| P2009 | Intake manifold runner control circuit, right-hand bank | • Intake manifold runner control circuit: short circuit to ground | No information available. |
| P2010 | Intake manifold runner control circuit, right-hand bank | • Intake manifold runner control circuit: short circuit to battery | No information available. |

## Pinpoint tests

CAUTION: When probing connectors to take measurements in the course of the pinpoint tests, use the adaptor kit, part number 3548-1358-00. Failure to follow this instruction may result in damage to the vehicle.

GETtheMANUALS.org

• NOTE: When performing electrical voltage or resistance tests, always use a digital multimeter (DMM) accurate to 3 decimal places, and with an up-to-date calibration certificate. When testing resistance, always take the resistance of the DMM leads into account.

• NOTE: Check and rectify basic faults before beginning diagnostic routines involving pinpoint tests.

| PINPOINT TEST A : CHECK THE OPERATION OF THE CAMSHAFT COVER CONTROL VALVE (S) | |
|---|---|
| **TEST CONDITIONS** | **DETAILS/RESULTS/ACTIONS** |
| **A1: CHECK THE VACUUM LINES TO THE CAMSHAFT COVER CONTROL VALVES** | |
| | 1 Check the vacuum lines for connection, security and condition. |
| | Are the vacuum lines connected, secure and in good condition?<br>**Yes**<br>GO to A2.<br>**No**<br>RECTIFY or replace as necessary. Test the system for normal operation. |
| **A2: CHECK THE FUNCTION OF THE CAMSHAFT COVER CONTROL VALVES** | |
| | 1 Disconnect the vacuum line to the suspect camshaft control valve actuator. |
| | 2 Connect a suitable hand vacuum pump to the control valve actuator. |
| | 3 Apply a vacuum to the actuator. |
| | 4 Observe the actuator linkage operation. |
| | Does the actuator linkage operate?<br>**Yes**<br>CHECK for DTCs indicating an intake air throttle fault.<br>**No**<br>INSTALL a new camshaft cover. Test the system for nomal operation. |

GETtheMANUALS.org

# Intake Air Distribution and Filtering - 2.7L V6 - TdV6 - Air Cleaner

Removal and Installation

| Special Tool(s) | |
|---|---|
| | Remover/Install, Cooling Hose Clamp<br><br>303-397 |

## Removal

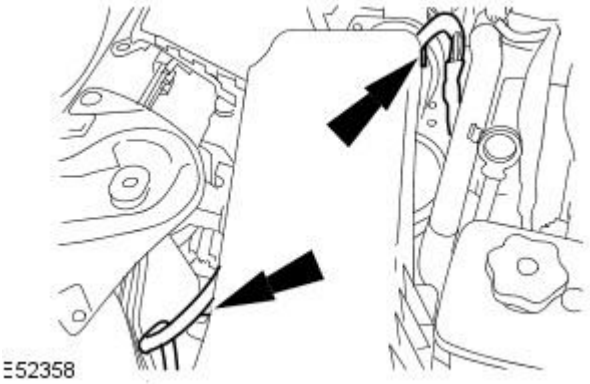


1. Remove the radiator grille opening panel.
   For additional information, refer to: Radiator Grille Opening Panel (501-02 Front End Body Panels, Removal and Installation).
2. Detach the mass air flow (MAF) wiring harness.

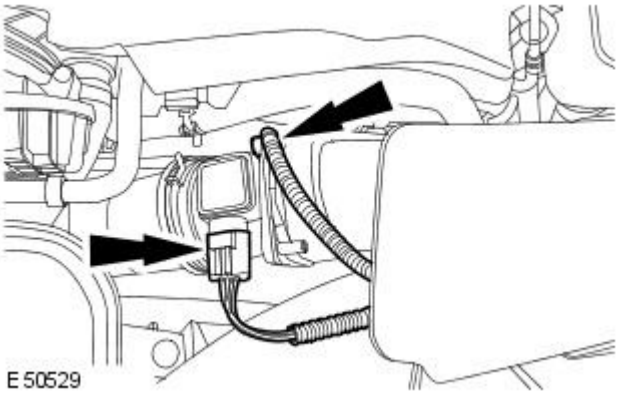


3. Disconnect the MAF sensor electrical connectors.

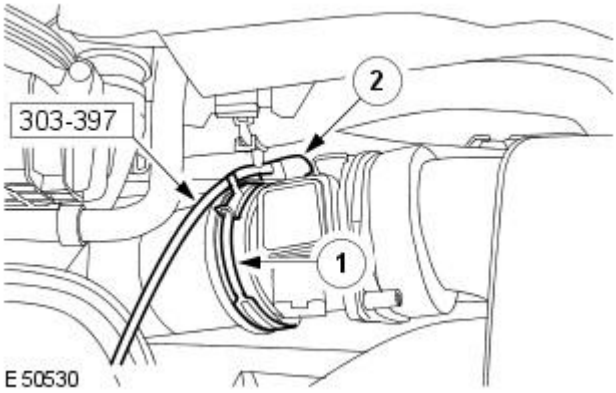


4. Using special tool 303-397, detach the MAF sensor outlet pipes.
   1. Detach the upper MAF sensor outlet pipe.
   2. Detach the lower MAF sensor outlet pipe.

GETtheMANUALS.org

**5.** Disconnect the port deactivation vacuum hose.

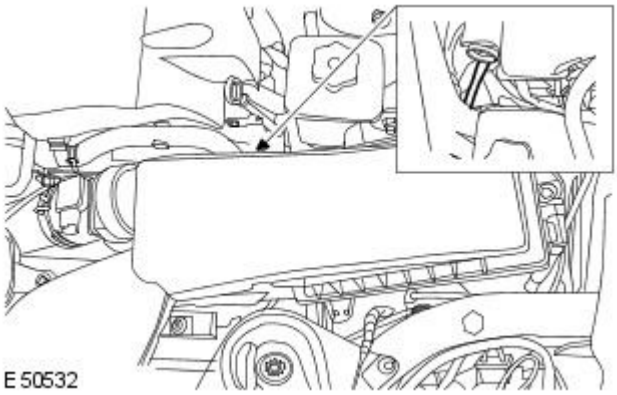


**6.** Remove the air cleaner retaining scrivet.

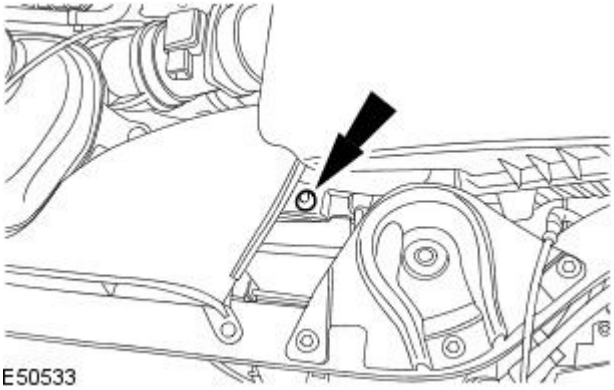


**7.** Remove the air cleaner.

- Remove the air cleaner retaining bolt.

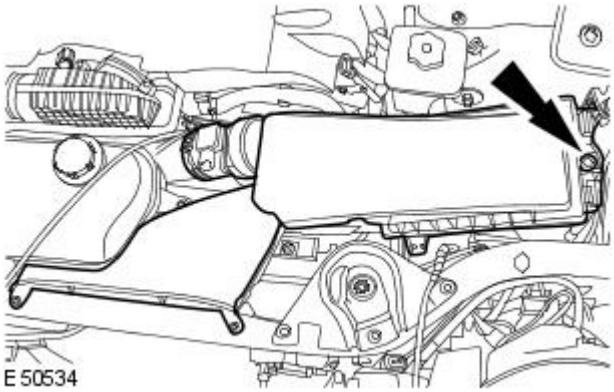


## Installation

**1.** To install, reverse the removal procedure.

- Tighten to 8 Nm.

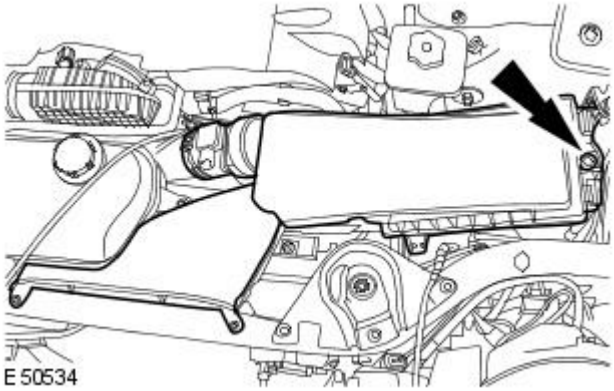


GETtheMANUALS.org

# Intake Air Distribution and Filtering - 2.7L V6 - TdV6 - Air Cleaner Element

Removal and Installation

## Removal

1. Remove the air cleaner.
   For additional information, refer to: Air Cleaner (303-12C Intake Air Distribution and Filtering - 2.7L V6 - TdV6, Removal and Installation).
2. Remove the air cleaner intake assembly from air cleaner base.

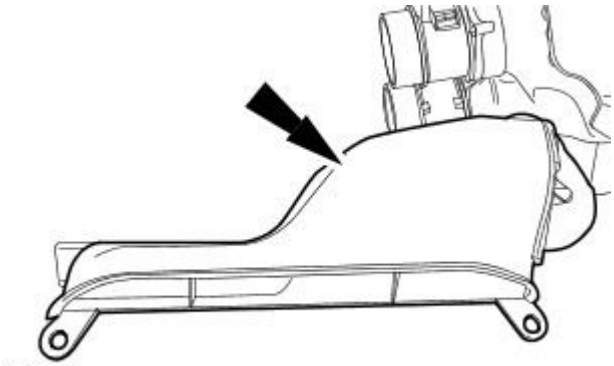

E50535

3. Remove the air cleaner cover.

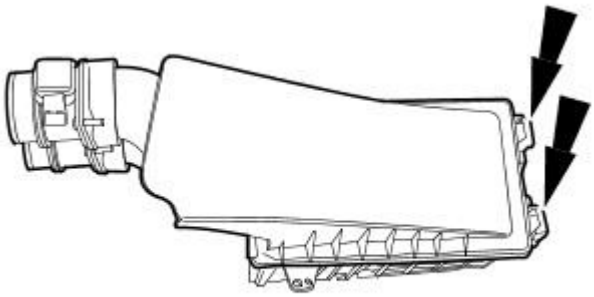

E50536

4. Remove the air cleaner element.

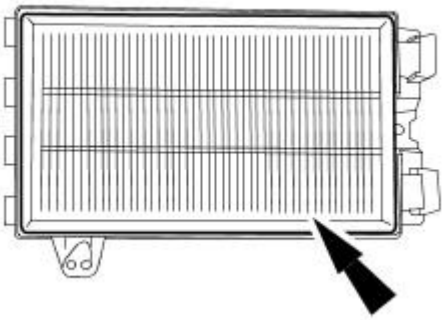

E50537

## Installation

1. To install, reverse the removal procedure.

GETtheMANUALS.org

# Intake Air Distribution and Filtering - 2.7L V6 - TdV6 - Charge Air Cooler

Removal and Installation

1. The charge air cooler is removed as part of the radiator assembly and can be serviced separately.
   For additional information, refer to: Radiator (303-03C Engine Cooling - 2.7L V6 - TdV6, Removal and Installation).

GETtheMANUALS.org

# Evaporative Emissions -

**Torque Specifications**

| Description | Nm | lb-ft | lb-in |
|---|---|---|---|
| Evaporative emission canister carrier bolts | 10 | 7 | - |

GETtheMANUALS.org

# Evaporative Emissions - Evaporative EmissionsVIN Range: M45255->N52047

Description and Operation

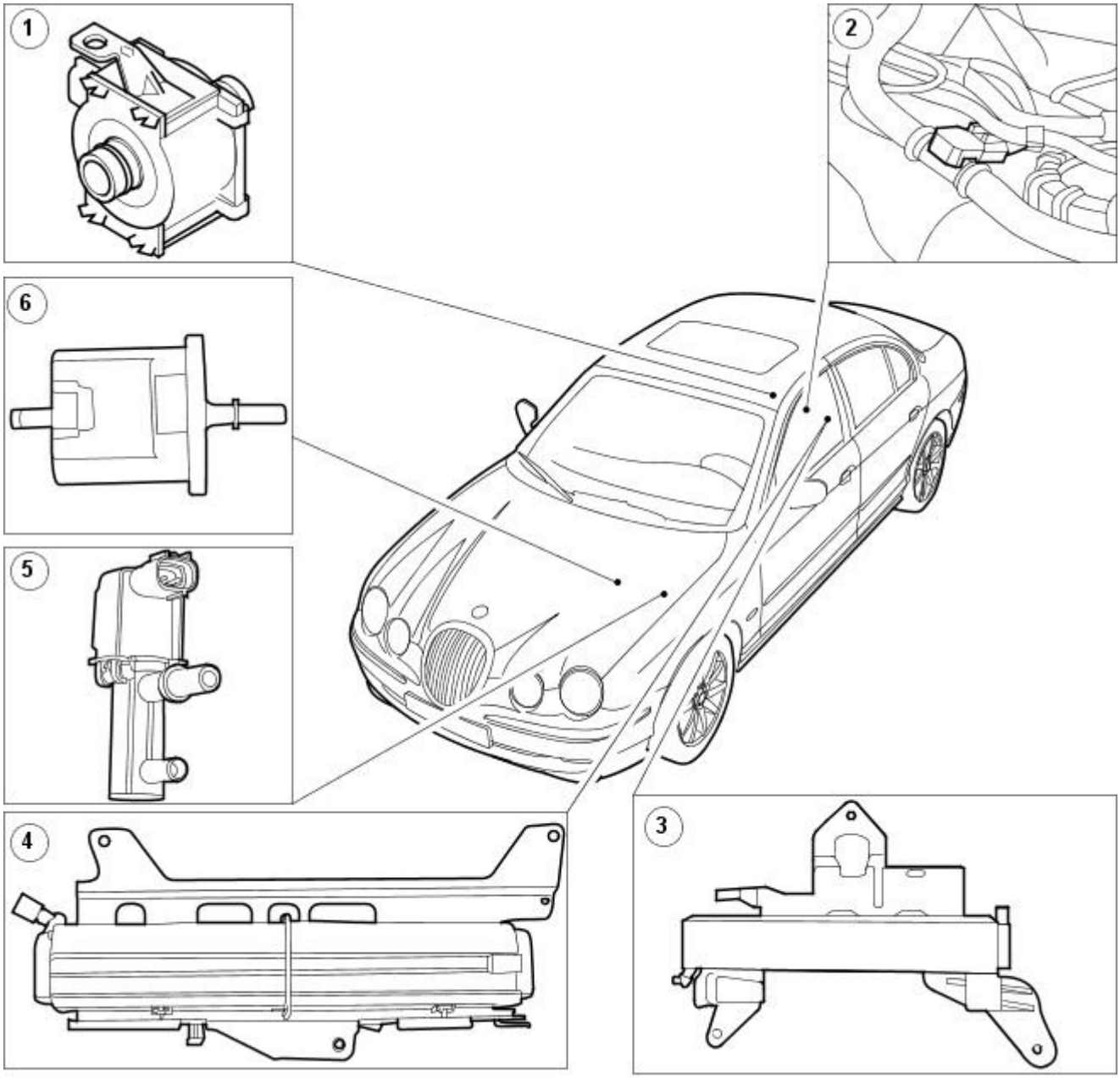


E 49901

| Item | Part Number | Description |
|---|---|---|
| 1 | — | Evaporative emission canister vent solenoid |
| 2 | — | Fuel tank pressure sensor (vehicles built up to 01/2004) |
| 3 | — | Evaporative emission canister (vehicles built up to 01/2004) |
| 4 | - | Evaporative emission canister (vehicles built 02/2004 onwards) |
| 5 | — | Evaporative emission canister purge valve |
| 6 | - | Evaporative emission canister purge valve resonator. |

The evaporative emission fuel vapor management system consists of an evaporative emission canister, evaporative emission canister purge valve and an evaporative emission canister purge valve resonator. A combination of plastic pipes and rubber hoses connect the evaporative emission canister to the fuel tank and the evaporative emission canister purge valve to the intake manifold.

GETtheMANUALS.org

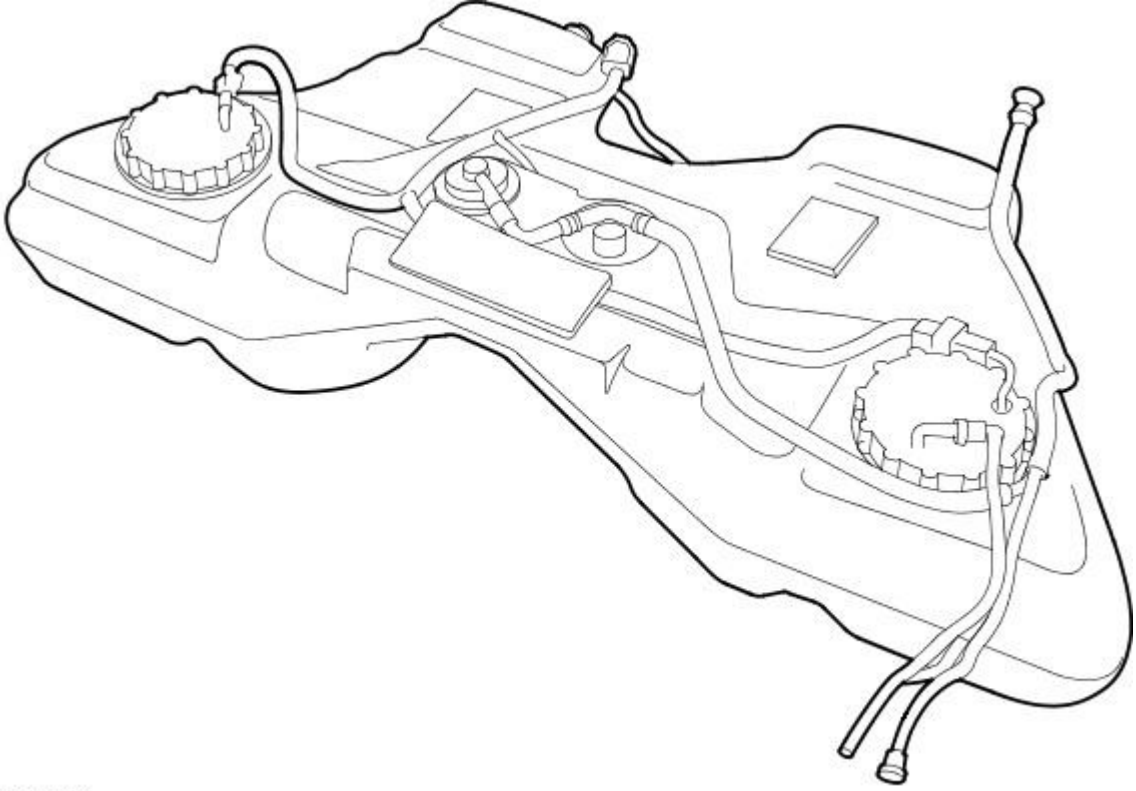

VUJ0005375

Onboard refuel vapor recovery (ORVR).

The vehicle is fitted with an onboard vapor recovery (ORVR) type fuel tank. During refuelling all vapor is collected in the evaporative emission canister as well as in normal vehicle operations.

Vehicles built up to 01/2004

On Federal (USA) specification vehicles the fuel vapor management system uses a canister vent solenoid and a fuel tank pressure sensor which are used during the engine management system on board diagnostic routines.

When the evaporative emission canister purge valve is closed, the fuel tank is vented into the evaporative emission canister through the fuel tank roll-over valve. The evaporative emission canister absorbs the fuel vapor and prevents the release of hydrocarbons into the atmosphere. When the vapor evaporative emission canister purge valve is opened, the canister is exposed to the intake manifold vacuum and the fuel vapor deposits are drawn into the manifold where they mix with the incoming air/fuel charge.

The evaporative emission fuel vapor management system is controlled by the engine control module (ECM) according to calibrated data tables.

GETtheMANUALS.org

# Evaporative Emissions - Evaporative EmissionsVIN Range: N52048->N99999

Description and Operation

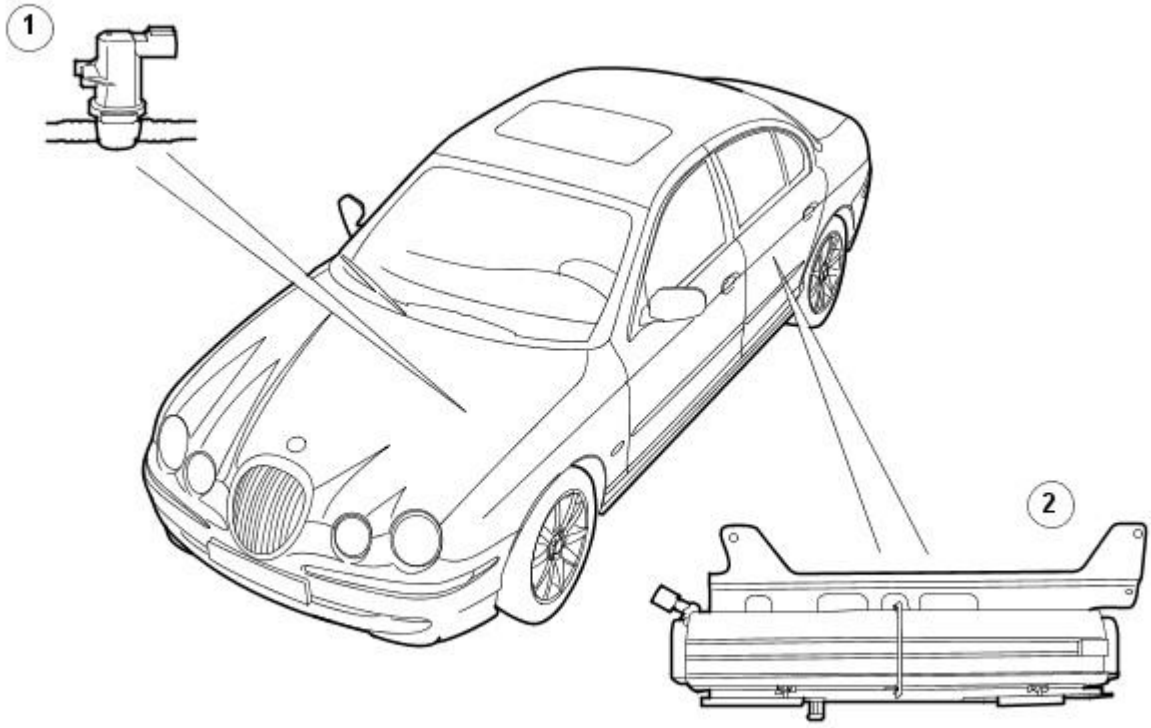


E63945

| Item | Part Number | Description |
|---|---|---|
| 1 | — | Evaporative emission canister purge valve |
| 2 | — | Evaporative emission canister |

The evaporative emission fuel vapor management system consists of an evaporative emission canister and an evaporative emission canister purge valve. A combination of plastic pipes and rubber hoses connect the evaporative emission canister to the fuel tank and the evaporative emission canister purge valve to the intake manifold.

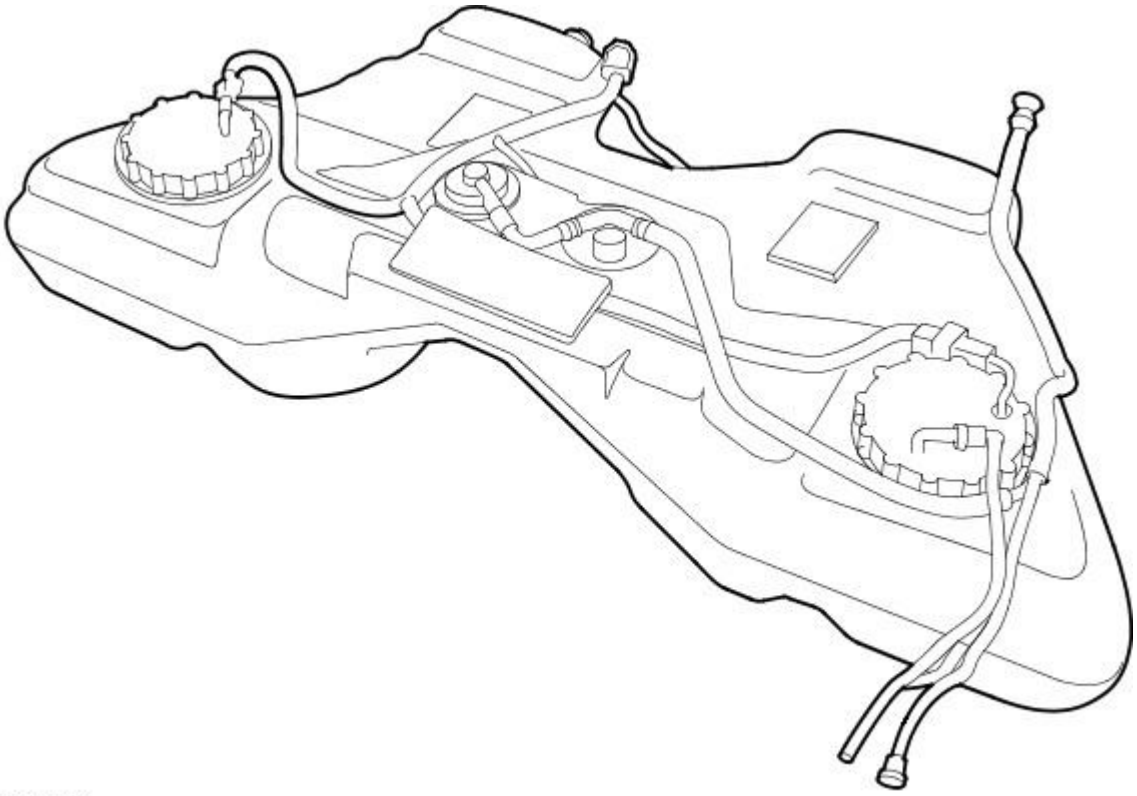

VUJ0005375

Onboard refuel vapor recovery (ORVR).

The vehicle is fitted with an onboard refuel vapor recovery (ORVR) type fuel tank. During refuelling all vapor is collected in the evaporative emission canister as well as in normal vehicle operations.

When the evaporative emission canister purge valve is closed, the fuel tank is vented into the evaporative emission canister through the fuel tank roll-over valve. The evaporative emission canister absorbs the fuel vapor and prevents the release of hydrocarbons into the atmosphere. When the vapor evaporative emission canister purge valve is opened, the canister is exposed to the intake manifold vacuum and the fuel vapor deposits are drawn into the manifold where they mix with the incoming air/fuel charge.

GETthemANUALS.org

The evaporative emission fuel vapor management system is controlled by the engine control module (ECM) according to calibrated data tables.

GETtheMANUALS.org

# Evaporative Emissions - Evaporative EmissionsVIN Range: M45255->N52047

Diagnosis and Testing

## Preliminary Inspection

1. **1.** Visually inspect for obvious signs of mechanical or electrical damage, blown fuses, etc.
2. **2.** If an obvious cause for an observed or reported concern is found, correct the cause (if possible) before proceeding to the next step.
3. **3.** If the concern is not visually evident, verify the symptom and proceed with diagnosis, using the Jaguar approved diagnostic system, where available.
4. **4.** Where K-Line equipment is available, it should be used as an aid to diagnosis.

## Diagnostic Drive Cycles

Following the setting of a DTC, the appropriate repairs must be carried out, and the normal operation of the system checked. This will be done by performing a series of drive cycles which will enable the vehicle to operate the Evaporative Emissions system as a function check. The following drive cycles cover the use of the Jaguar approved diagnostic system, GDS510 instrument, and a test with no additional equipment, where possible.

## Flow check monitor drive cycle conditions (non-Fed)

• NOTE: These conditions must be satisfied before the test is commenced.

This drive cycle should be performed following rectification work on the system.

- Make sure the fuel tank is between one quarter and three quarters full. (adding fuel will increase vapor generation; the diagnostic will not run if the vapor concentration is too great)
- Make sure the ambient air temperature is above -5°C. (23°F)

## Flow check monitor drive cycle (non-Fed)

- Drive the vehicle for a minimum of 15 minutes, avoiding severe or excessive fuel movement.
- Avoiding excessive fuel movement, gently bring the vehicle to rest. (coast to a stop)
- Allow the vehicle to idle for two minutes.

## Full Evaporative system monitor drive cycle conditions

• NOTE: These conditions must be satisfied before the test is commenced.

- Make sure the fuel filler cap is correctly fitted. (minimum three clicks)
- Clear the DTCs. (perform a code clear, even if no codes are present. This will reset TIDs)
- Make sure the fuel tank is between one quarter and three quarters full. (adding fuel will increase vapor generation; the diagnostic will not run if the vapor concentration is too great)
- Drive the vehicle for a minimum of two minutes, and until fully warm. (temperature gauge just below mid-point)
- Make sure that the purge valve is operating, either by touch, sound, or using datalogger. (purge vapor management valve-duty cycle)
  - If the purge is not active, perform the "Drive cycle for green engine control module (ECM)" in this section.

## Full Evaporative system monitor drive cycle

- Drive the vehicle to a suitable road where the test can be carried out, switch off the ignition.
- Leave the ignition switched off for 30 seconds.
- Restart the engine, accelerate briskly to 50 miles per hour (80 Kilometres per hour) making sure that the engine speed reaches at least 3500 RPM for a minimum of five seconds.

### 40 thou test, using the Jaguar approved diagnostic system

- Avoiding high engine loads, drive the vehicle steadily between 40 and 60 miles per hour. (64 and 97 Kilometres per hour) Using the Jaguar approved diagnostic system, monitor the Evap valve duty cycle (Purge vapor management valve-duty cycle) CCV status (Canister close valve-vapor recovery system) and the FTPS (Fuel tank pressure-vapor recovery system) The Jaguar approved diagnostic system will give an indication when the test is active. Dependant on the level of vapor concentration, it may take up to 30 minutes for the test to initialise. (vapor concentration cannot be measured using the Jaguar approved diagnostic equipment) When the test has initialised, (CCV closed) it will take up to 90 seconds to complete. Avoid excessive fuel movement while the test is active.

### 20 thou test, using the Jaguar approved diagnostic system

- Continue driving the vehicle steadily between 40 and 60 miles per hour. (64 and 97 Kilometres per hour) avoiding high engine loads for a further 10 minutes.
- Avoiding excessive fuel movement, gently bring the vehicle to rest (coast to a stop)
- Allow the vehicle to idle for 2 minutes.
- Use the Jaguar approved diagnostic system to monitor the Evap valve duty cycle (Purge vapor management valve-duty cycle) CCV status (Canister close valve-vapor recovery system) and the FTPS (Fuel tank pressure-vapor recovery system) The Jaguar approved diagnostic system will give an indication when the test is active. When the test has initialised, (CCV closed) it will take up to 90 seconds to complete.

If the 20 thou test has not run, it is likely that the vapor concentration in the purge system is too great. In this case, carry out the following -

- Drive the vehicle steadily for a further 30 minutes, avoiding excessive fuel movement.
- Avoiding excessive fuel movement, gently bring the vehicle to rest (coast to a stop)
- Allow the vehicle to idle for 2 minutes.
- Use the Jaguar approved diagnostic system to monitor the Evap valve duty cycle (Purge vapor management valve-duty cycle) CCV status (Canister close valve-vapor recovery system) and the FTPS (Fuel tank pressure-vapor recovery system) The Jaguar approved diagnostic system will give an indication when the test is active. When the test has initialised, (CCV closed) it will take up to 90 seconds to complete.

GETthemANUALS.org

If the 20 thou test fails to run a second time, repeat the entire test.

- Check for DTCs. Rectify as indicated.

### 40 thou test, using GDS510

- Avoiding high engine loads, drive the vehicle steadily between 40 and 60 miles per hour. (64 and 97 Kilometres per hour)
- When the test has initialised, using the GDS510, monitor the Evap valve duty cycle, CCV status, and the FTPS (the GDS510 will give an indication when the test is active)
- When the test has initialised, (CCV closed) it will take up to 90 seconds to complete.
- To make sure that the test has completed, TID 08 in mode 6 must be checked. (if the test has not completed, this TID will display 0. Any other value indicates test completion)
- If the test did not complete, repeat the test.

### 20 thou test, using GDS510

- Continue driving the vehicle steadily between 40 and 60 miles per hour. (64 and 97 Kilometres per hour) avoiding high engine loads for a further 10 minutes.
- Avoiding excessive fuel movement, gently bring the vehicle to rest (coast to a stop)
- Allow the vehicle to idle for 2 minutes.
- When the test has initialised, using the GDS510, monitor the Evap valve duty cycle, CCV status, and the FTPS (the GDS510 will give an indication when the test is active)
- When the test has initialised, (CCV closed) it will take up to 90 seconds to complete.
- To make sure that the test has completed, TID 06 in mode 6 must be checked. (if the test has not completed, this TID will display 0. Any other value indicates test completion)
- If the test did not complete, repeat the test.
- If the 20 thou test has not run, it is likely that the vapor concentration in the purge system is too great. In this case, drive the vehicle steadily for a further 30 minutes, avoiding excessive fuel movement, then repeat the test.
- Check for DTCs. Rectify as indicated.

### 40 thou and 20 thou tests using no additional equipment

The test procedure and conditions are as for the Jaguar approved diagnostic system or GDS510, but no confirmation of the test having run is possible without the use of one of these instruments. The DTC will be set if the fault still exists, but the possibility exists that the conditions for the test to run may not have been met, in which case, the DTC may not be set until the owner reproduces the conditions in which the fault originally occurred.

## Drive cycle for "green" ECM

- To enable the ECM to re-learn fuelling adaptions.

• NOTE: This procedure should be performed whenever the vehicle battery has been disconnected.

Due to component tolerance and wear during the normal running of a vehicle, fuelling and air requirements for an engine will vary over time. The ECM has the ability to adjust for this variation by "learning" the level of compensation that is required. (These compensation values are referred to as adaptions)

If the vehicle battery is disconnected, all adaptions held within the ECM will be lost (ie, set to Zero) The ECM is then referred to as "green". To enable the vehicle to function correctly, the ECM must "relearn" these adaptions.

There are four areas or sites that need to be relearnt.

- Allow the vehicle to idle until fully warm. (temperature gauge just below mid-point)
- Allow to idle for a further three minutes, minimum.
- Drive the vehicle with the air conditioning OFF on a level road using a constant throttle, or speed control if fitted, for at least one minute in the following gears, at the stated engine speeds for each of the sites below.

The vehicle speed is for guidance only. DO NOT use the vehicle speed as the target to set adaptions.

### "Green" ECM drive cycle chart. Site 1

| Engine / transmission software level | 3.0L Man Z65 on | 3.0L Auto Z65 on | 2.5L Man Z65 on | 2.5L Auto Z65 on |
|---|---|---|---|---|
| GEAR | N | P/N | N | P/N |
| ENGINE SPEED | Idle | Idle | Idle | Idle |
| VEHICLE SPEED (GUIDE ONLY) | 0MPH | 0MPH | 0MPH | 0MPH |

### "Green" ECM drive cycle chart. Site 2

| Engine / transmission software level | 3.0L Man Z65 on | 3.0L Auto Z65 on | 2.5L Man Z65 on | 2.5L Auto Z65 on |
|---|---|---|---|---|
| GEAR | 3rd | 3rd | 3rd | 3rd |
| ENGINE SPEED | 2000RPM | 1750RPM | 2000RPM | 1750RPM |
| VEHICLE SPEED (GUIDE ONLY) | 28MPH (45KPH) | 24MPH (39KPH) | 29MPH (47KPH) | 23MPH (37KPH) |

### "Green" ECM drive cycle chart. Site 3

| Engine / transmission software level | 3.0L Man Z65 on | 3.0L Auto Z65 on | 2.5L Man Z65 on | 2.5L Auto Z65 on |
|---|---|---|---|---|
| GEAR | 4th | 4th | 4th | 4th |
| ENGINE SPEED | 2250RPM | 2000RPM | 2250RPM | 2000RPM |
| VEHICLE SPEED (GUIDE ONLY) | 42MPH (68KPH) | 40MPH (64KPH) | 45MPH (72KPH) | 43MPH (69KPH) |

### "Green" ECM drive cycle chart. Site 4

| Engine / transmission software level | 3.0L Man Z65 on | 3.0L Auto Z65 on | 2.5L Man Z65 on | 2.5L Auto Z65 on |
|---|---|---|---|---|
| GEAR | 4th | 4th | 4th | 4th |
| ENGINE SPEED | 2750RPM | 2500RPM | 2750RPM | 2500RPM |
| VEHICLE SPEED (GUIDE ONLY) | 52MPH (84KPH) | 50MPH (80KPH) | 54MPH (87KPH) | 54MPH (87KPH) |

Bring the vehicle to rest, allow to idle for one minute.

GETtheMANUALS.org

WARNING: The following tests may involve parts which are hot.

If sufficient adaptions have occurred, the Evap valve should now be operating. This can be verified manually by either touching or listening to the valve. By touching the Evap valve, it should be possible to feel the valve switching. Listening to the Evap valve is best done using a workshop stethoscope, through which it should be possible to hear the valve operating.

## Diagnostic Trouble Code Charts

**Diagnostic Trouble Code Chart**

| Diagnostic Trouble Code | Description | Possible Source | Action |
|---|---|---|---|
| P0441 | EVAP/purge valve flow check. | • EVAP/purge valve.<br>• Hose and connections. | GO to Pinpoint Test A. |
| P0442 | Leak detected. 40 thou. | • Hoses and connections.<br>• Fuel tank filler cap.<br>• Carbon canister.<br>• Canister close valve. | GO to Pinpoint Test B. |
| P0443 | EVAP/purge valve leaking. | EVAP/purge valve. | GO to Pinpoint Test C. |
| P0444 | EVAP/purge valve circuit open. | EVAP/purge valve or circuit. | .GO to Pinpoint Test D. |
| P0445 | EVAP/purge valve circuit shorted. | EVAP/purge valve or circuit. | GO to Pinpoint Test E. |
| P0446 | Canister Close Valve stuck closed. | • Filter box.<br>• Hoses and connections.<br>• CCV.<br>• Fuel tank vapour port.<br>• Carbon canister. | GO to Pinpoint Test F. |
| P0447 | Canister Close Valve circuit open circuit. | CCV or circuit. | GO to Pinpoint Test G. |
| P0448 | Canister Close Valve circuit shorted. | CCV or circuit. | GO to Pinpoint Test H. |
| P0450 | Fuel tank Pressure Sensor malfunction | FTPS. | GO to Pinpoint Test I. . |
| P0452 | FTPS low input. | FTPS or circuit. | GO to Pinpoint Test J. . |
| P0453 | FTPS high input. | FTPS or circuit. | GO to Pinpoint Test J. . |
| P0455 | Gross leak. | • Fuel tank and lines.<br>• Fuel filler cap.<br>• Carbon Canister.<br>• EVAP/purge valve stuck closed.<br>• CCV.<br>• Blockage in vapor lines from engine to fuel tank. | GO to Pinpoint Test K. |
| P0456 | Leak detected. 20 thou. | • Fuel tank and lines.<br>• Fuel filler cap.<br>• Carbon Canister.<br>• CCV. | GO to Pinpoint Test L. |

## Pinpoint Tests

| PINPOINT TEST A : P0441. EVAP/PURGE VALVE FLOW CHECK. VALVE STUCK CLOSED. | |
|---|---|
| **TEST CONDITIONS** | **DETAILS/RESULTS/ACTIONS** |
| **A1: CHECK EVAP/PURGE VALVE IS OPERATING.** | |
| | 1 Disconnect the Vapor pipe from the Inlet port of the EVAP/purge valve. (ie, from fuel tank) |
| | 2 Run the engine for 2 minutes, ensuring that the engine reaches normal operating temperature. |
| | 3 Check that the EVAP/purge valve is operating, by touch or by sound. (Using a stethoscope, it will be possible to hear the valve operating.) |
| | Is the valve operating?<br>**Yes**<br>GO to A2.<br>**No**<br>CHECK for DTC P0444, P0445. Conduct green ECM drive cycle. For additional information, see "diagnostic drive cycles" above. |
| **A2: CHECK FOR VACUUM AT EVAP/PURGE VALVE.** | |
| | 1 Check for vacuum at the valve. |
| | Is a vacuum present?<br>**Yes**<br>Possible intermittent fault. Clear the DTC. Carry out a flow check monitor drive cycle, recheck DTCs. For additional information, see "diagnostic drive cycles" above.<br>**No**<br>GO to A3. |
| **A3: CHECK FOR BLOCKAGE IN THE SYSTEM.** | |
| | 1 Check for blockages in the intake manifold drilling, and the pipe from the intake manifold to the EVAP/purge valve. |
| | Was a blockage found?<br>**Yes**<br>Rectify the blockage. CLEAR the DTC. Carry out a flow check monitor drive cycle. For additional information, see "diagnostic drive cycles" above.<br>**No**<br>INSTALL a new EVAP/purge valve.<br>REFER to Evaporative Emission Canister Purge Valve in this section.<br>CLEAR the DTC. Carry out a flow check monitor drive cycle, recheck DTCs. For additional information, see "diagnostic drive cycles" above. |

| PINPOINT TEST B : P0442. LEAK DETECTED. 40 THOU. | |
|---|---|
| **TEST CONDITIONS** | **DETAILS/RESULTS/ACTIONS** |

GETtheMANUALS.org

| B1: CHECK FUEL FILLER CAP FITMENT AND CONDITION OF PIPES AND CONNECTORS. | |
|---|---|
| | 1 Ensure that the fuel filler cap is correctly installed and tightened. (minimum 3 clicks) |
| | 2 Check the condition of all accessible pipes and connectors in the vapor line. |
| | Are all pipes and connectors in good condition?<br>**Yes**<br>Suspect concern with fuel tank assembly or carbon canister assembly.<br>**No**<br>REPAIR as necessary. CLEAR the DTC. Carry out a full Evap system monitor drive cycle, recheck DTCs. For additional information, see "diagnostic drive cycles" above. |

| PINPOINT TEST C : P0443. EVAP/PURGE VALVE LEAKING. | |
|---|---|
| TEST CONDITIONS | DETAILS/RESULTS/ACTIONS |
| C1: CHECK EVAP/PURGE VALVE INTEGRITY. | |
| | 1 Disconnect the outlet pipe from the EVAP/purge valve. (From valve to manifold). |
| | 2 Apply a vacuum to the valve outlet pipe. |
| | Does the valve hold vacuum?<br>**Yes**<br>Possible intermittent fault. CLEAR the DTC. Carry out a full Evap system monitor drive cycle, recheck DTCs. For additional information,<br>**No**<br>INSTALL a new EVAP/purge valve. CLEAR the DTC. Carry out a full Evap system monitor drive cycle, recheck DTCs. For additional information, see "diagnostic drive cycles" above. |

| PINPOINT TEST D : P0444. EVAP/PURGE VALVE CIRCUIT OPEN CIRCUIT. | |
|---|---|
| TEST CONDITIONS | DETAILS/RESULTS/ACTIONS |
| D1: CHECK SUPPLY VOLTAGE TO EVAP/PURGE VALVE. | |
| | 1 Disconnect EVAP/purge valve electrical connector, FH111. |
| | 2 Turn the ignition switch to the ON position. |
| | 3 Measure the voltage at FH111, pin 1 (GU). |
| | Is the voltage greater than 10 volts?<br>**Yes**<br>GO to D2.<br>**No**<br>REPAIR the circuit between EVAP/purge valve electrical connector, FH111, pin 1 (GU) and the EMS control relay. For additional information, refer to wiring diagrams. CLEAR the DTC. Turn the ignition switch to the ON position. Leave switched on for minimum 30 seconds. Recheck DTCs. For additional information, see "diagnostic drive cycles" above. |
| D2: CHECK THE EVAP/PURGE VALVE SIGNAL WIRE FOR CONTINUITY. | |
| | 1 Disconnect the ECM electrical connector, PI01. |
| | 2 Measure the resistance between PI01, pin 66 (UY) and FH111, pin 2 (UY). |
| | Is the resistance less than 5 Ohms?<br>**Yes**<br>GO to D3.<br>**No**<br>REPAIR the circuit between PI01, pin 66 (UY) and FH111, pin 2 (UY). CLEAR the DTC. Turn the ignition switch to the ON position. Leave switched on for minimum 30 seconds. Recheck DTCs. For additional information, see "diagnostic drive cycles" above. |
| D3: CHECK THE EVAP/PURGE VALVE SIGNAL WIRE FOR SHORT TO GROUND | |
| | 1 Measure the resistance between FH111, pin 2 (UY) and GROUND. |
| | Is the resistance less than 10,000 Ohms?<br>**Yes**<br>REPAIR the short to ground. For additional information, refer to wiring diagrams. CLEAR the DTC. Turn the ignition switch to the ON position. Leave switched on for minimum 30 seconds. Recheck DTCs. For additional information, see "diagnostic drive cycles" above.<br>**No**<br>GO to D4. |
| D4: CHECK THE EVAP/PURGE VALVE SIGNAL WIRE FOR SHORT TO BATTERY | |
| | 1 Connect the ECM electrical connector, PI01. |
| | 2 Turn the ignition switch to the ON position. |
| | 3 Check for a voltage at FH111, pin 2 (UY). |
| | Is the voltage greater than 1 volt?<br>**Yes**<br>REPAIR the short to battery. For additional information, refer to wiring diagrams. CLEAR the DTC. Turn the ignition switch to the ON position. Leave switched on for minimum 30 seconds. Recheck DTCs. For additional information, see "diagnostic drive cycles" above.<br>**No**<br>GO to D5. |
| D5: CHECK THE EVAP/PURGE VALVE RESISTANCE. | |
| | 1 Check the resistance between pins 1 and 2 of the EVAP/purge valve. |
| | Is the resistance 30 to 34 Ohms at 68°F (20°C)?<br>**Yes**<br>INSTALL a new ECM. REFER to Section 303-14A Electronic Engine Controls / 303-14B Electronic Engine Controls / 303-14C Electronic Engine Controls. Before replacing a ECM, contact Dealer technical support.<br>**No**<br>INSTALL a new EVAP/purge valve.<br>REFER to Evaporative Emission Canister Purge Valve in this section.<br>CLEAR the DTC. Turn the ignition switch to the ON position. Leave switched on for minimum 30 seconds. Recheck DTCs. For additional information, see "diagnostic drive cycles" above. |

| PINPOINT TEST E : P0445. EVAP/PURGE VALVE CIRCUIT SHORTED. | |
|---|---|
| TEST CONDITIONS | DETAILS/RESULTS/ACTIONS |
| E1: CHECK EVAP/PURGE VALVE SIGNAL WIRE FOR SHORT TO GROUND. | |
| | 1 Disconnect EVAP/purge valve electrical connector FH111. |
| | 2 Disconnect ECM electrical connector, PI01. |

GETtheMANUALS.org

| | |
|---|---|
| | 3 Measure the resistance between FH111, pin 2 (UY) and ground. |
| | Is the resistance less than 10,000 Ohms?<br>**Yes**<br>REPAIR the short to ground. For additional information, refer to wiring diagrams. CLEAR the DTC. Turn the ignition switch to the ON position. Leave switched on for minimum 30 seconds. Recheck DTCs. For additional information, see "diagnostic drive cycles" above.<br>**No**<br>NO short found. A short in the EVAP/purge valve supply circuit may result in a blown fuse 36, PDFB. See initial checks. CLEAR the DTC. Turn the ignition switch to the ON position. Leave switched on for minimum 30 seconds. Recheck DTCs. For additional information, see "diagnostic drive cycles" above. |

**PINPOINT TEST F : P0446. CANISTER CLOSE VALVE STUCK CLOSED.**

| TEST CONDITIONS | DETAILS/RESULTS/ACTIONS |
|---|---|
| **F1: CHECK FOR FLOW THROUGH SYSTEM.** | |
| • NOTE: Depending on the severity of the blockage, it is possible that some difficulty has been experienced during refuelling. | |
| | 1 Disconnect the vapor line from EVAP/purge valve inlet port and apply low pressure. |
| | 2 Check for free flow of air through the following, paying attention to kinked or flattened pipes.<br>• Filter.<br>• Interconnecting pipe. (filter to CCV)<br>• CCV.<br>• Interconnecting pipe. CCV to carbon canister.<br>• Carbon canister.<br>• Interconnecting pipe, carbon canister to fuel tank.<br>• Fuel tank vapor port. |
| | Is there a restriction?<br>**Yes**<br>RECTIFY as necessary. CLEAR the DTC. Carry out a full Evap system monitor drive cycle, recheck DTCs. For additional information, see "diagnostic drive cycles" above.<br>**No**<br>CLEAR the DTC. Carry out a full Evap system monitor drive cycle, recheck DTCs. For additional information, see "diagnostic drive cycles" above. |

**PINPOINT TEST G : P0447. CANISTER CLOSE VALVE CIRCUIT OPEN CIRCUIT.**

| TEST CONDITIONS | DETAILS/RESULTS/ACTIONS |
|---|---|
| **G1: CHECK SUPPLY VOLTAGE TO CCV.** | |
| | 1 Disconnect canister close valve electrical connector, CA270. |
| | 2 Turn the ignition switch to the ON position. |
| | 3 Measure the voltage at CA270, pin 1 (GU) |
| | Is the voltage greater than 10 volts?<br>**Yes**<br>GO to G2.<br>**No**<br>REPAIR the circuit between CA270, pin 1 (GU) and the EMS control relay. For additional information, refer to wiring diagrams. CLEAR the DTC. Turn the ignition switch to the ON position. Leave switched on for minimum 30 seconds. Recheck DTCs. For additional information, see "diagnostic drive cycles" above. |
| **G2: CHECK THE CCV SIGNAL WIRE FOR CONTINUITY.** | |
| | 1 Disconnect the ECM electrical connector, PI01. |
| | 2 Measure the resistance between PI01, pin 67 (O) and CA270, pin 2 (O) |
| | Is the resistance less than 5 Ohms?<br>**Yes**<br>GO to G4.<br>**No**<br>REPAIR the circuit between PI01, pin 67 (O) and CA270, pin 2 (O) For additional information, refer to wiring diagrams. CLEAR the DTC. Turn the ignition switch to the ON position. Leave switched on for minimum 30 seconds. Recheck DTCs. For additional information, see "diagnostic drive cycles" above. |
| **G3: CHECK THE CCV SIGNAL WIRE FOR SHORT TO BATTERY** | |
| | 1 Turn the ignition switch to the ON position. |
| | 2 Check for a voltage at CA270, pin 2 (O) |
| | Is the voltage greater than 1 volt?<br>**Yes**<br>REPAIR the short to battery. For additional information, refer to wiring diagrams. CLEAR the DTC. Turn the ignition switch to the ON position. Leave switched on for minimum 30 seconds. Recheck DTCs. For additional information, see "diagnostic drive cycles" above.<br>**No**<br>GO to G4. |
| **G4: CHECK THE CCV RESISTANCE** | |
| | 1 Check the resistance between pins 1 and 2 of the CCV. |
| | Is the resistance 25 to 30 Ohms at 68°F (20°C) ?<br>**Yes**<br>INSTALL a new ECM. Before replacing a ECM, contact Dealer Technical Support.<br>**No**<br>INSTALL a new CCV. CLEAR the DTC. Turn the ignition switch to the ON position. Leave switched on for minimum 30 seconds. Recheck DTCs. For additional information, see "diagnostic drive cycles" above. |

**PINPOINT TEST H : P0448. CCV CIRCUIT SHORTED.**

| TEST CONDITIONS | DETAILS/RESULTS/ACTIONS |
|---|---|
| **H1: CHECK CCV SIGNAL WIRE FOR SHORT TO GROUND.** | |
| | 1 Disconnect CCV electrical connector, CA270. |
| | 2 Disconnect ECM electrical connector, PI01. |
| | 3 Measure the resistance between CA270, pin 2 (O) and ground. |

GETtheMANUALS.org

| | |
|---|---|
| | Is the resistance less than 10,000 Ohms?<br>**Yes**<br>REPAIR the short to ground. For additional information, refer to wiring diagrams. CLEAR the DTC. Turn the ignition switch to the ON position. Leave switched on for minimum 30 seconds. Recheck DTCs. For additional information, see "diagnostic drive cycles" above.<br>**No**<br>NO short found. A short in the CCV supply circuit may result in a blown fuse 36, PDFB. See initial checks. |

| **PINPOINT TEST I : P0450. FUEL TANK PRESSURE SENSOR MALFUNCTION.** | |
|---|---|
| • NOTE: Prior to commencing this test, REFER to Section 303-14A Electronic Engine Controls / 303-14B Electronic Engine Controls / 303-14C Electronic Engine Controls.Electronic Engine Controls, Diagnosis and Testing, sensor supply and ground circuits. | |
| • NOTE: Access to the FTP sensor involves the removal of the fuel tank. To reduce the amount of work necessary, a slave harness and sensor could be used. This can be connected at the access port beneath the rear seat. Tests can then be carried out via the slave harness and sensor. If system operation is normal with the slave harness and sensor, the fault lies in the vehicle's harness or sensor. | |
| **TEST CONDITIONS** | **DETAILS/RESULTS/ACTIONS** |
| **I1: FUEL TANK PRESSURE SENSOR IS OPERATING.** | |
| | 1 Disconnect electrical connector FP002. (beneath rear seat) |
| | 2 Turn the ignition switch to the ON position. |
| | 3 Measure the voltage between pins 2 and 3 of FP002. |
| | Is the voltage 2.9 - 3.7 volts?<br>**Yes**<br>GO to I2. Reconnect FP002.<br>**No**<br>INSTALL a new FTPS.<br>REFER to Section 310-01 Fuel Tank and Lines.<br>Reconnect FP002. CLEAR the DTC. Turn the ignition switch to the ON position. Leave switched on for minimum 30 seconds. Recheck DTCs. For additional information, see "diagnostic drive cycles" above. |
| **I2: CHECK SIGNAL VOLTAGE AT FTPS.** | |
| | 1 Run the engine for two minutes, and until fully warm. |
| | 2 Make sure EVAP/purge valve is operating. |
| | 3 Steadily increase engine speed to 3000 RPM. |
| | 4 Measure the voltage between pins 2 and 3 of FP002. |
| | Does the voltage reduce?<br>**Yes**<br>Possible intermittent fault. Recheck DTCs, For additional information, see "diagnostic drive cycles" above. Contact Dealer technical support.<br>**No**<br>INSTALL a new FTPS.<br>REFER to Section 310-01 Fuel Tank and Lines.<br>CLEAR the DTC. Carry out a full EVAP system monitor drive cycle. Recheck DTCs. For additional information, see "diagnostic drive cycles" above. |

| **PINPOINT TEST J : P0452, O0453. FUEL TANK PRESSURE SENSOR LOW/HIGH INPUT.** | |
|---|---|
| • NOTE: Prior to commencing this test, REFER to Section 303-14A Electronic Engine Controls / 303-14B Electronic Engine Controls / 303-14C Electronic Engine Controls. Electronic Engine Controls, Diagnosis and Testing, sensor supply and ground circuits. | |
| • NOTE: Access to the FTP sensor involves the removal of the fuel tank. To reduce the amount of work necessary, a slave harness and sensor could be used. This can be connected at the access port beneath the rear seat. Tests can then be carried out via the slave harness and sensor. Tests can then be carried out via the slave harness and sensor. If system operation is normal with the slave harness and sensor, the fault lies in the vehicle's harness or sensor. | |
| **TEST CONDITIONS** | **DETAILS/RESULTS/ACTIONS** |
| **J1: CHECK FTPS SIGNAL WIRE FOR CONTINUITY UP TO CONNECTOR CA5.** | |
| | 1 Disconnect ECM electrical connector, PI01. |
| | 2 Disconnect FTPS electrical connector, FP002. |
| | 3 Check for continuity between PI01, pin 104 (RG) and FP002, pin 3 (RG)<br>• This test will not check the continuity of the harness from FP002 to FP001. If the circuit is continuous to FP002, the fuel tank must be removed and the harness and sensor continuity checked. |
| | Is the circuit continuous?<br>**Yes**<br>INSTALL a new FTPS, (and/or harness, FP002 to FP001) CLEAR the DTC. Turn the ignition switch to the ON position. Leave switched on for minimum 30 seconds. Recheck DTCs. For additional information, see "diagnostic drive cycles" above. If the DTC is repeated, INSTALL a new ECM. REFER to Section 303-14A Electronic Engine Controls / 303-14B Electronic Engine Controls / 303-14C Electronic Engine Controls. Before replacing a ECM, contact Dealer technical support.<br>**No**<br>REPAIR the circuit between PI01, pin 104 (RG) and FP002, pin 3 (RG) CLEAR the DTC. Carry out a full Evap system monitor drive cycle. For additional information, see "diagnostic drive cycles" above. Recheck DTCs. |
| **J2: CHECK FTPS SUPPLY WIRE FOR SHORT TO GROUND UP TO CONNECTOR FP002** | |
| | 1 Measure the resistance between FP002, pin 6 (OY) and ground. |
| | Is the resistance less than 10,000 Ohms?<br>**Yes**<br>REPAIR the short to ground. For additional information, refer to wiring diagrams. CLEAR the DTC. Turn the ignition switch to the ON position. Leave switched on for minimum 30 seconds. Recheck DTCs. For additional information, see "diagnostic drive cycles" above.<br>**No**<br>GO to J3. |
| **J3: CHECK FTPS SIGNAL WIRE FOR SHORT TO GROUND, UP TO CONNECTOR FP002.** | |
| | 1 Connect ECM electrical connector, PI01. |
| | 2 Measure the resistance between FP002, pin 3 (RG) and ground. |
| | Is the resistance less than 10,000 Ohms?<br>**Yes**<br>REPAIR the short to ground. For additional information, refer to wiring diagrams. CLEAR the DTC. Turn the ignition switch to the ON position. Leave switched on for minimum 30 seconds. Recheck DTCs. For additional information, see "diagnostic drive cycles" above.<br>**No**<br>GO to J4. |

GETtheMANUALS.org

| J4: CHECK FTPS SIGNAL WIRE FOR SHORT TO BATTERY, UP TO CONNECTOR FP002 | |
|---|---|
| | 1 Turn the ignition switch to the ON position. |
| | 2 Check for a voltage at FP002, pin 3 (RG) |
| | Is the voltage greater than 1 volt?<br>**Yes**<br>REPAIR the short to battery. For additional information, refer to wiring diagrams. CLEAR the DTC. Turn the ignition switch to the ON position. Leave switched on for minimum 30 seconds. Recheck DTCs. For additional information, see "diagnostic drive cycles" above.<br>**No**<br>GO to J5. |
| **J5: CHECK FTPS GROUND WIRE FOR SHORT TO BATTERY, UP TO CONNECTOR FP002** | |
| | 1 Turn the ignition switch to the ON position. |
| | 2 Check for a voltage at FP002, pin 2 (BG) |
| | Is the voltage greater than 1 volt?<br>**Yes**<br>REPAIR the short to battery. For additional information, refer to wiring diagrams. CLEAR the DTC. Carry out a full Evap system monitor drive cycle, recheck DTCs. For additional information, see "diagnostic drive cycles" above.<br>**No**<br>GO to J2. |
| **J6: CHECK FTPS SUPPLY WIRE FOR SHORT TO BATTERY UP TO CONNECTOR FP002** | |
| | 1 Connect ECM electrical connector, PI01. |
| | 2 Turn the ignition switch to the ON position. |
| | 3 Check for a voltage at FP002, pin 6 (OY)<br>● This test will not check the integrity of the harness from FP002 to FT1. If the circuit is sound to FP002, the fuel tank must be removed and the harness and sensor continuity checked. |
| | Is the voltage greater than 5 volts?<br>**Yes**<br>REPAIR the short to battery. For additional information, refer to wiring diagrams. CLEAR the DTC. Carry out a full Evap system monitor drive cycle, recheck DTCs. For additional information, see "diagnostic drive cycles" above.<br>**No**<br>INSTALL a new FTPS, (and/or harness, FP002 to FT1) CLEAR the DTC. Carry out a full Evap system monitor drive cycle, recheck DTCs. For additional information, see "diagnostic drive cycles" above. If the DTC is repeated, INSTALL a new ECM. REFER to Section 303-14A Electronic Engine Controls / 303-14B Electronic Engine Controls / 303-14C Electronic Engine Controls. Before replacing a ECM, contact Dealer technical support. |

| PINPOINT TEST K : P0455. GROSS LEAK DETECTED. | |
|---|---|
| **TEST CONDITIONS** | **DETAILS/RESULTS/ACTIONS** |
| **K1: CHECK FUEL FILLER CAP FITMENT AND CONDITION OF PIPES AND CONNECTORS.** | |
| | 1 Ensure that the fuel filler cap is correctly installed and tightened. (minimum 3 clicks) |
| | 2 Check the condition of all accessible pipes and connectors in the vapor line. |
| | Are all pipes and connectors in good condition?<br>**Yes**<br>Suspect concern with - 1. Blockage in vapor line. (engine to fuel tank)2. EVAP/purge valve stuck closed.3. Fuel tank assembly.4. carbon canister assembly.<br>**No**<br>REPAIR as necessary. CLEAR the DTC. Carry out a full Evap system monitor drive cycle, recheck DTCs. For additional information, see "diagnostic drive cycles" above. |

| PINPOINT TEST L : P0456. LEAK DETECTED. 20 THOU. | |
|---|---|
| **TEST CONDITIONS** | **DETAILS/RESULTS/ACTIONS** |
| **L1: CHECK FUEL FILLER CAP FITMENT AND CONDITION OF PIPES AND CONNECTORS.** | |
| | 1 Ensure that the fuel filler cap is correctly installed and tightened. (minimum 3 clicks) |
| | 2 Check the condition of all accessible pipes and connectors in the vapor line. |
| | Are all pipes and connectors in good condition?<br>**Yes**<br>Suspect concern with fuel tank assembly or carbon canister assembly.<br>**No**<br>REPAIR as necessary. CLEAR the DTC. Carry out a full Evap system monitor drive cycle, recheck DTCs. For additional information, see "diagnostic drive cycles" above. |

GETtheMANUALS.org

# Evaporative Emissions - Evaporative EmissionsVIN Range: N52048->N99999

Diagnosis and Testing

## Overview

2006my changes

There are changes to the engine management system (EMS) for 2006 my, the most obvious of which will be the change to 7-digit diagnostic trouble codes (DTCs) from the familiar 5-digit, plus the addition of secondary air injection and changes to Federal evaporative emissions (Europe is unchanged) and all market exhaust gas recirculation to comply with stage four emissions requirements.

The hardware changes to the Federal evaporative emissions system are the deletion of the canister close valve and the fuel tank pressure sensor, which have been replaced with a combined unit incorporating a DMTL (diagnostic monitoring of tank leakage) pump and a COV (change-over valve) into one module.

The software changes will have more effect on the technician, as there is no longer the need to carry out extensive drive cycles to confirm the success of a repair.

## DMTL conditions

The DMTL test is performed after the engine has stopped following a 10 minute run, providing that the vehicle fuel tank is between 15 and 85 percent full and that the ambient temperature is above 0°C (32°F) and less than 40°C (104°F).

The DMTL pump is driven to pressurize the fuel tank and the current is measured with the change-over valve in different states.

A comparison of the current draw in each state indicates the degree of any leak, and the ECM then sets the appropriate DTC.

## Inspection and verification

1. **1.** Visually inspect for obvious signs of mechanical or electrical damage.
2. **2.** If an obvious cause for an observed or reported concern is found, correct the cause (if possible) before proceeding to the next step.

**Visual inspection chart**

| Mechanical | Electrical |
|---|---|
| • Fuel filler cap and seal<br>• Fuel filler neck<br>• DMTL fresh air filter (restriction, etc)<br>• Fuel tank (leaks, damage, etc)<br>• Fuel lines and joints, etc<br>• Carbon canister<br>• Purge valve<br>• DMTL pump module | • Fuses<br>• Connectors<br>• Harness(es)<br>• Purge valve<br>• DMTL pump |

3. **3.** If the cause is not visually evident use the Jaguar approved diagnostic system or a scan tool to retrieve the fault codes before proceeding to the DTC Index.
4. • NOTE: On all vehicles equipped with Diagnostic Monitor Tank Leakage (DMTL), there is a requirement to blank off the ventilation port (large diameter stub pipe) of the DMTL module, to prevent mis-diagnosis when carrying out a smoke test.

   **4.** Where K-Line, Vacutec or other proprietary smoke test equipment is available, it should be utilised to assist with Evaporative Emissions System leak diagnosis.

## Symptom Chart

| Symptom | Possible Source | Action |
|---|---|---|
| Difficulty in filling | • Restriction in the vapor line between the fuel tank and the carbon canister outlet/atmospheric port | Check for restrictions/damage, etc (see visual inspection). |
| Fuel smell | • System leak<br>• Purge valve inoperative | Check for leaks, check the purge valve operation. GO to Pinpoint Test A. |
| Message center display (refer to the owners handbook) | • Fuel filler cap missing/not tightened after refuelling | Check the fuel filler cap and seal (see visual inspection). |

**DTC index**

• NOTE: Generic scan tools may not read the codes listed, or may read only 5-digit codes. Match the 5 digits from the scan tool to the first 5 digits of the 7-digit code listed to identify the fault (the last 2 digits give extra information read by the manufacturer-approved diagnostic system).

| Diagnostic Trouble Code | Description | Possible Source | Action |
|---|---|---|---|
| P044100 | Incorrect purge flow | • Evaporative canister purge pipe restricted, leaking, disconnected<br>• Evaporative canister vent restricted<br>• Evaporative canister purge valve to engine pipe(s) restricted, leaking, disconnected<br>• Evaporative canister purge valve failure | For basic checks. GO to Pinpoint Test A. Check for DTCs indicating a purge valve fault. |
| P044700 | Change-over valve (COV) control circuit | • DMTL COV circuit short circuit to ground | For COV circuit tests, GO to Pinpoint Test B. |
| P044800 | COV control circuit | • DMTL COV circuit short circuit to power | For COV circuit tests, GO to Pinpoint Test B. |

GETtheMANUALS.org

| Diagnostic Trouble Code | Description | Possible Source | Action |
|---|---|---|---|
| P045600 | Leak detected (very small leak) | • DMTL has detected a leak in the fuel system | Check the fuel system integrity (see visual inspection). Carry out K line or Vacutec tests to identify the leak. |
| P045800 | Purge valve control circuit | • Purge valve control circuit: short circuit to ground<br>• Purge valve control circuit: high resistance | For purge valve circuit tests. GO to Pinpoint Test C. |
| P045900 | Purge valve control circuit | • Purge valve control circuit: short circuit to power | For purge valve circuit tests. GO to Pinpoint Test C. |
| P240100 | DMTL pump control circuit | • DMTL pump control circuit: short circuit to ground | For DMTL pump circuit tests. GO to Pinpoint Test D. |
| P240200 | DMTL pump control circuit | • DMTL pump control circuit: short circuit to power | For DMTL pump circuit tests. GO to Pinpoint Test D. |
| P240429 | DMTL pump sense circuit range/performance - signal invalid | • DMTL reference leak<br>• DMTL pump circuit: short circuit, high resistance<br>• DMTL pipework blocked/leaking | Check the DMTL pipework. For DMTL pump circuit tests, GO to Pinpoint Test D. |
| P24042F | DMTL pump sense circuit range/performance - signal erratic | • DMTL reference leak<br>• DMTL pump circuit: short circuit, high resistance<br>• DMTL pipework blocked/leaking | Check the DMTL pipework. For DMTL pump circuit tests, GO to Pinpoint Test D. |
| P240500 | DMTL pump sense circuit low | • DMTL pump circuit: short circuit, high resistance | For DMTL pump circuit tests, GO to Pinpoint Test D. |
| P240600 | DMTL pump sense circuit high | • DMTL pump circuit: short circuit, high resistance | For DMTL pump circuit tests, GO to Pinpoint Test D. |
| P240B00 | DMTL pump heater circuit low | • DMTL heater control circuit: short circuit to ground<br>• DMTL heater control circuit: high resistance | For DMTL heater circuit tests. GO to Pinpoint Test E. |
| P240C00 | DMTL pump heater circuit high | • DMTL heater control circuit: short circuit to power | For DMTL heater circuit tests. GO to Pinpoint Test E. |
| P245000 | COV performance/stuck open | • DMTL pump circuit: short circuit, high resistance<br>• DMTL COV stuck open | For DMTL pump tests, GO to Pinpoint Test D. For DMTL COV tests, GO to Pinpoint Test B. If the circuits are good, replace the DMTL assembly. |
| P245100 | COV performance/stuck closed | • DMTL pump circuit: short circuit, high resistance<br>• DMTL COV stuck closed | For DMTL pump tests, GO to Pinpoint Test D. For DMTL COV tests, GO to Pinpoint Test B. If the circuits are good, replace the DMTL pump module. |

## Pinpoint Tests

CAUTION: When probing connectors to take measurements in the course of the pinpoint tests, use the adaptor kit, part number 3548-1358-00.

• NOTE: When performing electrical voltage or resistance tests, always use a digital multimeter (DMM) accurate to 3 decimal places, and with an up-to-date calibration certificate. When testing resistance, always take the resistance of the DMM leads into account.

• NOTE: Check and rectify basic faults before beginning diagnostic routines involving pinpoint tests.

| PINPOINT TEST A : EVAPORATIVE SYSTEM INCORRECT PURGE FLOW | |
|---|---|
| **TEST CONDITIONS** | **DETAILS/RESULTS/ACTIONS** |
| **A1: CHECK FUEL FILLER CAP FITMENT AND CONDITION OF CANISTER, PIPES AND CONNECTORS** | |
| | 1 Make sure that the fuel filler cap is correctly installed and tightened. |
| | 2 Check the condition of the carbon canister. |
| | 3 Check the condition of all accessible pipes and connectors in the vapor line. |
| | Are the canister and all pipes and connectors in good condition?<br>**Yes**<br>GO to A2.<br>**No**<br>REPAIR as necessary. CLEAR the DTC, test the system for normal operation. |
| **A2: CHECK THAT THE PURGE VALVE IS OPERATING** | |
| | 1 Disconnect the vapor pipe from the inlet port of the evaporative purge valve. |
| | 2 **RUN** the engine for 2 minutes, making sure that the engine reaches normal operating temperature. |
| | 3 Check that the evaporative purge valve is operating, by touch or by sound (using a stethoscope, it will be possible to hear the valve operating). |
| | Is the valve operating?<br>**Yes**<br>CHECK for related DTCs. Refer to the index above.<br>**No**<br>CHECK the purge valve circuits. GO to Pinpoint Test C. |

| PINPOINT TEST B : CHANGE-OVER VALVE (COV) CONTROL CIRCUIT | |
|---|---|
| **TEST CONDITIONS** | **DETAILS/RESULTS/ACTIONS** |
| **B1: CHECK THE COV CONTROL CIRCUIT FOR SHORT CIRCUIT TO GROUND** | |

GETtheMANUALS.org

| | |
|---|---|
| | 1 Key off.<br>2 Disconnect the DMTL electrical connector, CA401.<br>3 Measure the resistance between: |

| DMTL connector CA401, harness side | Battery |
|---|---|
| Pin 03 | Negative terminal |

| | |
|---|---|
| | Is the resistance less than 10,000 ohms?<br>**Yes**<br>REPAIR the short circuit. For additional information, refer to the wiring diagrams. Clear the DTC, test the system for normal operation.<br>**No**<br>GO to B2. |

**B2: CHECK THE COV CONTROL CIRCUIT FOR SHORT CIRCUIT TO POWER**

| | |
|---|---|
| | 1 Measure the resistance between: |

| DMTL connector CA401, harness side | Battery |
|---|---|
| Pin 03 | Positive terminal |

| | |
|---|---|
| | Is the resistance less than 10,000 ohms?<br>**Yes**<br>REPAIR the short circuit. For additional information, refer to the wiring diagrams. Clear the DTC, test the system for normal operation.<br>**No**<br>GO to B3. |

**B3: CHECK THE COV CONTROL CIRCUIT FOR HIGH RESISTANCE**

| | |
|---|---|
| | 1 Disconnect the ECM electrical connector, FH300.<br>2 Measure the resistance between: |

| DMTL connector CA401, harness side | ECM connector FH300, harness side |
|---|---|
| Pin 03 | Pin 48 |

| | |
|---|---|
| | Is the resistance greater than 5 ohms?<br>**Yes**<br>REPAIR the high resistance circuit. For additional information, refer to the wiring diagrams. Clear the DTC, test the system for normal operation.<br>**No**<br>INSTALL a new DMTL assembly. If the DTC is repeated, refer to the warranty policy and procedures manual if an ECM is suspect. |

**PINPOINT TEST C : PURGE VALVE CONTROL CIRCUIT**

| TEST CONDITIONS | DETAILS/RESULTS/ACTIONS |
|---|---|

**C1: CHECK THE POWER SUPPLY TO THE PURGE VALVE**

| | |
|---|---|
| | 1 Disconnect the purge valve connector, PI304.<br>2 Key on, engine off.<br>3 Measure the voltage between: |

| Purge valve connector PI304, harness side | Battery |
|---|---|
| Pin 01 | Negative terminal |

| | |
|---|---|
| | Is the voltage less than 10 volts?<br>**Yes**<br>REPAIR the circuit between the purge valve and battery. This circuit includes harness splices and fuse 37 of the front power distribution box. For additional information, refer to the wiring diagrams. Clear the DTC, test the system for normal operation.<br>**No**<br>GO to C2. |

**C2: CHECK THE PURGE VALVE CONTROL CIRCUIT FOR SHORT CIRCUIT TO GROUND**

| | |
|---|---|
| | 1 Key off.<br>2 Measure the resistance between: |

| Purge valve connector PI304, harness side | Battery |
|---|---|
| Pin 02 | Negative terminal |

| | |
|---|---|
| | Is the resistance less than 10,000 ohms?<br>**Yes**<br>REPAIR the short circuit. For additional information, refer to the wiring diagrams. Clear the DTC, test the system for normal operation.<br>**No**<br>GO to C3. |

**C3: CHECK THE PURGE VALVE CONTROL CIRCUIT FOR SHORT CIRCUIT TO POWER**

| | |
|---|---|
| | 1 Measure the resistance between: |

| Purge valve connector PI304, harness side | Battery |
|---|---|
| Pin 02 | Positive terminal |

| | |
|---|---|
| | Is the resistance less than 10,000 ohms?<br>**Yes**<br>REPAIR the short circuit. For additional information, refer to the wiring diagrams. Clear the DTC, test the system for normal operation.<br>**No**<br>GO to C4. |

**C4: CHECK THE PURGE VALVE CONTROL CIRCUIT FOR HIGH RESISTANCE**

| | |
|---|---|
| | 1 Disconnect the ECM electrical connector, PI300.<br>2 Measure the resistance between: |

| Purge valve connector PI304, harness side | ECM connector PI300, harness side |
|---|---|
| Pin 02 | Pin 92 |

| | |
|---|---|
| | Is the resistance greater than 5 ohms?<br>**Yes**<br>REPAIR the high resistance circuit. For additional information, refer to the wiring diagrams. Clear the DTC, test the system for normal operation.<br>**No**<br>INSTALL a new purge valve. REFER to: (303-13 Evaporative Emissions)<br>Evaporative Emission Canister Purge Valve - 3.0L, VIN Range: N52048->N99999 (Removal and Installation),<br>Evaporative Emission Canister Purge Valve - 4.2L, Vehicles With: Supercharger, VIN Range: N52048->N99999 (Removal and Installation),<br>Evaporative Emission Canister Purge Valve - 4.2L, Vehicles Without: Supercharger, VIN Range: N52048->N99999 |

GETTHEWANIAL.org

| | |
|---|---|
| | (Removal and Installation).<br>Clear the DTC, test the system for normal operation. If the DTC is repeated, refer to the warranty policy and procedures manual if an ECM is suspect. |

## PINPOINT TEST D : DIAGNOSTIC MONITORING OF FUEL TANK LEAKAGE (DMTL) PUMP CONTROL CIRCUIT

| TEST CONDITIONS | DETAILS/RESULTS/ACTIONS |
|---|---|
| **D1: CHECK THE POWER SUPPLY TO THE DMTL PUMP** | |
| | 1 Key off. |
| | 2 Disconnect the DMTL pump electrical connector, CA401. |
| | 3 Key on, engine off. |
| | 4 Measure the voltage between: |

| DMTL pump connector CA401, harness side | Battery |
|---|---|
| Pin 04 | Negative terminal |

| | |
|---|---|
| | Is the voltage less than 10 volts?<br>**Yes**<br>REPAIR the circuit between the DMTL pump and battery. This circuit includes harness splice FHS04 and fuse 49 of the front power distribution box. For additional information, refer to the wiring diagrams. Clear the DTC, test the system for normal operation.<br>**No**<br>GO to D2. |
| **D2: CHECK THE DMTL PUMP CONTROL CIRCUIT FOR SHORT CIRCUIT TO GROUND** | |
| | 1 Key off. |
| | 2 Measure the resistance between: |

| DMTL pump connector CA401, harness side | Battery |
|---|---|
| Pin 01 | Negative terminal |

| | |
|---|---|
| | Is the resistance less than 10,000 ohms?<br>**Yes**<br>REPAIR the short circuit. For additional information, refer to the wiring diagrams. Clear the DTC, test the system for normal operation.<br>**No**<br>GO to D3. |
| **D3: CHECK THE DMTL PUMP CONTROL CIRCUIT FOR SHORT CIRCUIT TO POWER** | |
| | 1 Measure the resistance between: |

| DMTL pump connector CA401, harness side | Battery |
|---|---|
| Pin 01 | Positive terminal |

| | |
|---|---|
| | Is the resistance less than 10,000 ohms?<br>**Yes**<br>REPAIR the short circuit. For additional information, refer to the wiring diagrams. Clear the DTC, test the system for normal operation.<br>**No**<br>GO to D4. |
| **D4: CHECK THE DMTL PUMP CONTROL CIRCUIT FOR HIGH RESISTANCE** | |
| | 1 Disconnect the ECM electrical connector, FH300. |
| | 2 Measure the resistance between: |

| DMTL pump connector CA401, harness side | ECM connector FH300, harness side |
|---|---|
| Pin 01 | Pin 33 |

| | |
|---|---|
| | Is the resistance greater than 5 ohms?<br>**Yes**<br>REPAIR the high resistance circuit. For additional information, refer to the wiring diagrams. Clear the DTC, test the system for normal operation.<br>**No**<br>INSTALL a new DMTL pump. Clear the DTC, test the system for normal operation. If the DTC is repeated, refer to the warranty policy and procedures manual if an ECM is suspect. |

## PINPOINT TEST E : DIAGNOSTIC MONITORING OF FUEL TANK LEAKAGE (DMTL) HEATER CIRCUIT

| TEST CONDITIONS | DETAILS/RESULTS/ACTIONS |
|---|---|
| **E1: CHECK THE POWER SUPPLY TO THE DMTL PUMP** | |
| | 1 Key off. |
| | 2 Disconnect the DMTL pump electrical connector, CA401. |
| | 3 Key on, engine off. |
| | 4 Measure the voltage between: |

| DMTL pump connector CA401, harness side | Battery |
|---|---|
| Pin 04 | Negative terminal |

| | |
|---|---|
| | Is the voltage less than 10 volts?<br>**Yes**<br>REPAIR the circuit between the DMTL pump and battery. This circuit includes harness splice FHS04 and fuse 49 of the front power distribution box. For additional information, refer to the wiring diagrams. Clear the DTC, test the system for normal operation.<br>**No**<br>GO to E2. |
| **E2: CHECK THE DMTL HEATER CONTROL CIRCUIT FOR SHORT CIRCUIT TO GROUND** | |
| | 1 Key off. |
| | 2 Measure the resistance between: |

| DMTL pump connector CA401, harness side | Battery |
|---|---|
| Pin 02 | Negative terminal |

| | |
|---|---|
| | Is the resistance less than 10,000 ohms?<br>**Yes**<br>REPAIR the short circuit. For additional information, refer to the wiring diagrams. Clear the DTC, test the system for normal operation.<br>**No**<br>GO to E3. |
| **E3: CHECK THE DMTL HEATER CONTROL CIRCUIT FOR SHORT CIRCUIT TO POWER** | |

GETtheMANUALS.org

1 Measure the resistance between:

| DMTL pump connector CA401, harness side | Battery |
|---|---|
| Pin 02 | Positive terminal |

Is the resistance less than 10,000 ohms?

**Yes**

REPAIR the short circuit. For additional information, refer to the wiring diagrams. Clear the DTC, test the system for normal operation.

**No**

GO to E4.

**E4: CHECK THE DMTL HEATER CONTROL CIRCUIT FOR HIGH RESISTANCE**

1 Disconnect the ECM electrical connector, FH300.

2 Measure the resistance between:

| DMTL pump connector CA401, harness side | ECM connector FH300, harness side |
|---|---|
| Pin 02 | Pin 23 |

Is the resistance greater than 5 ohms?

**Yes**

REPAIR the high resistance circuit. For additional information, refer to the wiring diagrams. Clear the DTC, test the system for normal operation.

**No**

INSTALL a new DMTL pump. Clear the DTC, test the system for normal operation. If the DTC is repeated, refer to the warranty policy and procedures manual if an ECM is suspect.

GETtheMANUALS.org

# Evaporative Emissions - Evaporative Emission CanisterVIN Range: M45255->N52047

Removal and Installation

| Special Tool(s) | |
|---|---|
| 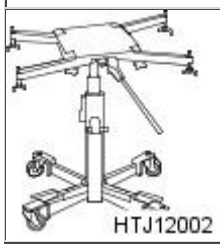 HTJ12002 | Powertrain assembly jack<br><br>HTJ1200-2 |

## Removal

All vehicles

1. Raise and support the vehicle.
   For additional information, refer to: Lifting (100-02 Jacking and Lifting, Description and Operation).
2. Remove the support bracket.

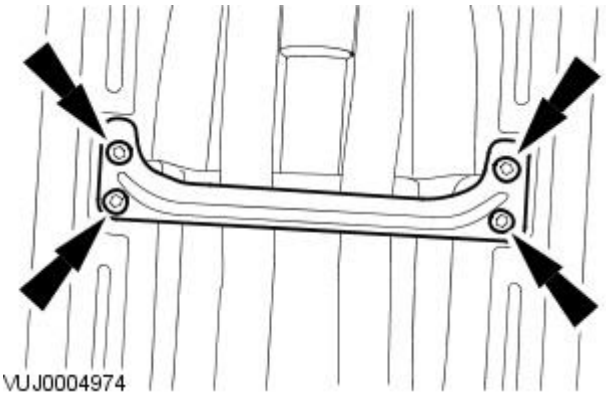
VUJ0004974

3. NOTE: Right-hand shown, Left-hand similar.

   Detach the rear muffler and tailpipe exhaust hanger insulator.

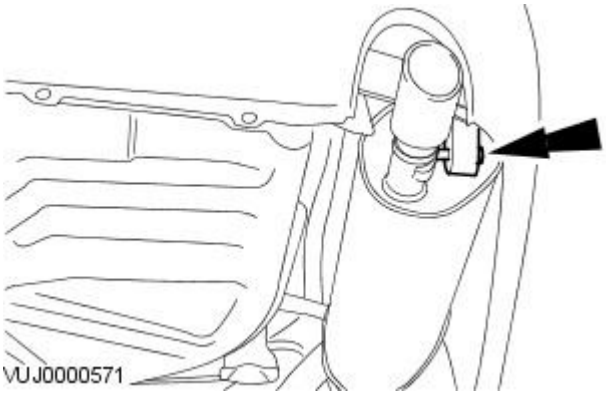
VUJ0000571

4. CAUTION: Using a suitable transmission jack, support the intermediate muffler.

   Detach the front muffler exhaust hanger insulators.

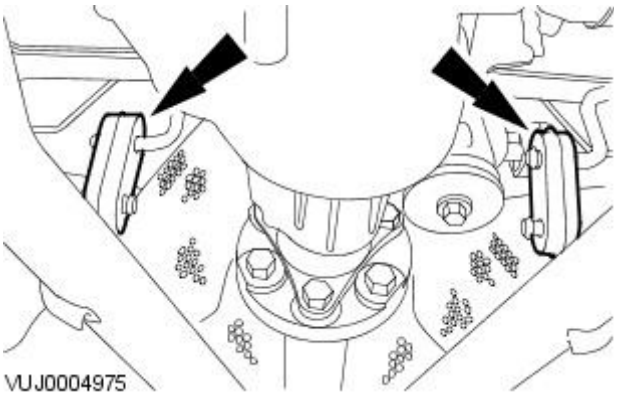
VUJ0004975

GETtheMANUALS.org

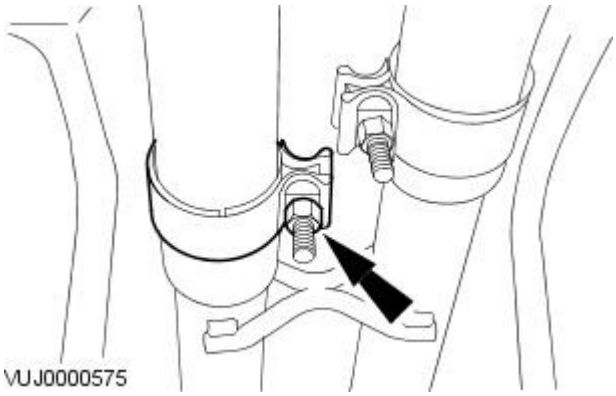


**5.** NOTE: Left-hand shown, right-hand similar.

Loosen both catalytic converter retaining clamps.

**6.** Remove the front muffler and tail pipes.

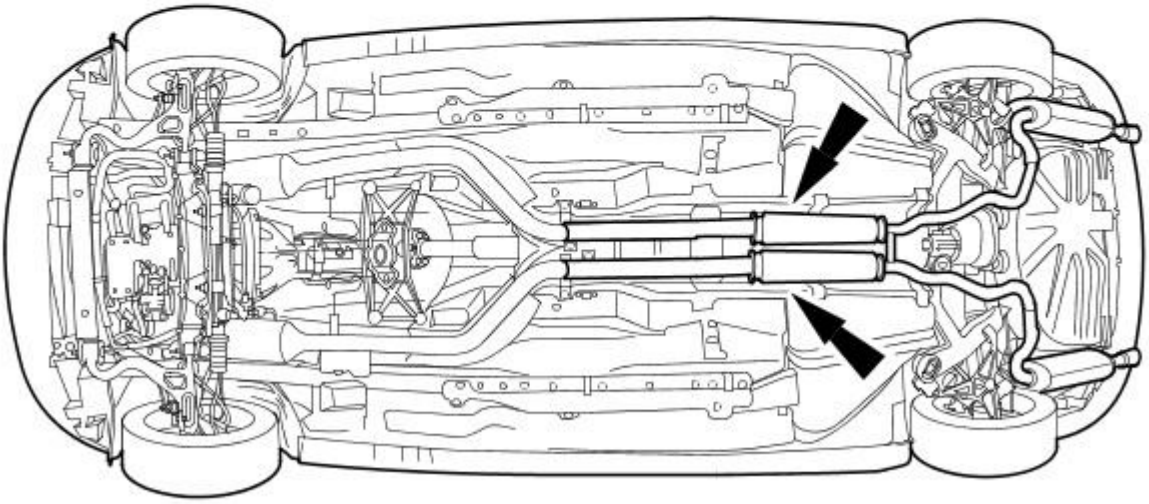


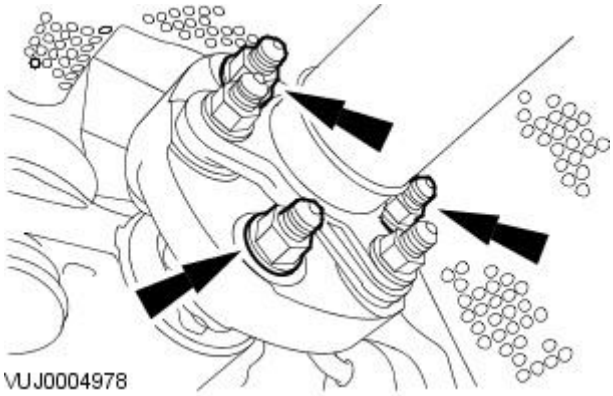


**7.** CAUTION: Under no circumstances must the flexible coupling (or its fixings) be loosened or removed from the driveshaft

Detach the driveshaft from the rear drive axle flange.

- Mark the position of the driveshaft in relation to the rear drive axle flange.
- Mark the position of the balance nut in relation to the rear drive axle flange (if fitted).
- Mark the position of each nut and bolt in relation to the rear drive axle flexible joint.

**8.** Remove both rear wheels and tires.
For additional information, refer to: Wheel and Tire (204-04 Wheels and Tires, Removal and Installation).

Vehicles without Brembo brakes

GETtheMANUALS.org

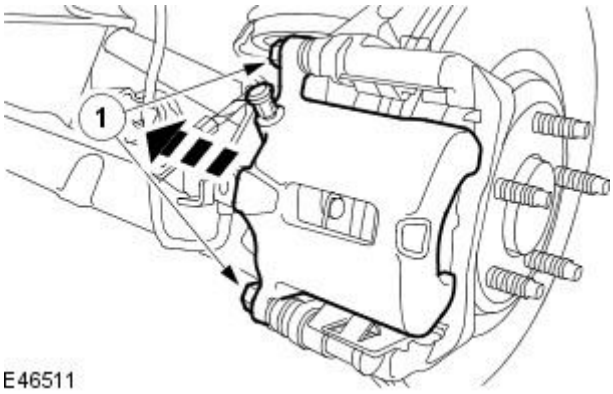


**9.** NOTE: Left-hand shown, right-hand similar.

Detach the brake caliper.

1. Remove and discard the brake caliper retaining bolts.

- Detach the brake caliper.

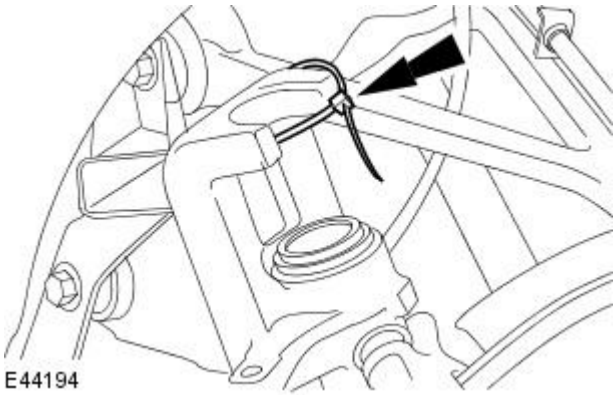


**10.** CAUTION: The brake caliper must be supported at all times.

• NOTE: Left-hand shown, right-hand similar.

Using a suitable tie strap, secure the caliper to one side.

Vehicles with Brembo brakes

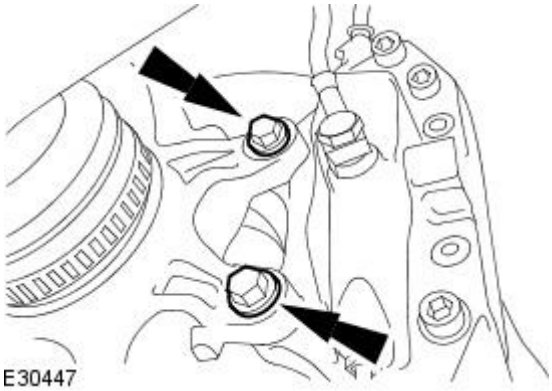


**11.** CAUTION: The brake caliper must be supported at all times.

• NOTE: Left-hand shown, right-hand similar.

Detach the brake caliper and secure to one side.

- Remove and discard the brake caliper retaining bolts.
- Using a suitable tie strap, secure the caliper to one side.

All vehicles

**12.** NOTE: Left-hand shown, right-hand similar.

Detach the wiring harness.

**13.** Remove the left-hand shock absorber and spring assembly.
For additional information, refer to: Shock Absorber and Spring Assembly (204-02 Rear Suspension, Removal and Installation).

GETtheMANUALS.org

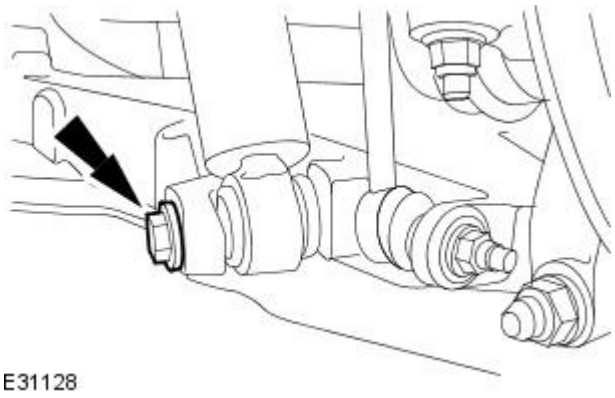


**14.** Detach the right-hand shock absorber.

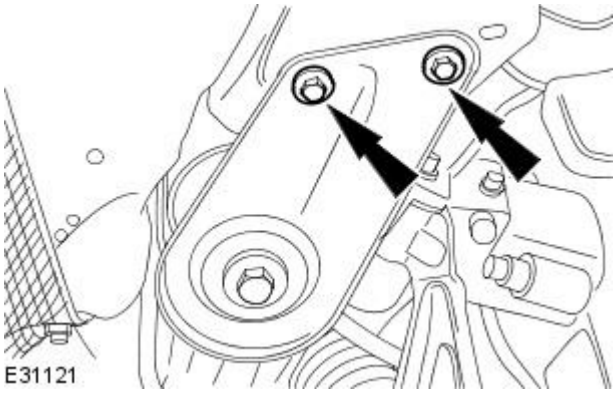


**15.** NOTE: Left-hand shown, right-hand similar.

Remove the rear subframe reinforcement plate retaining bolts.

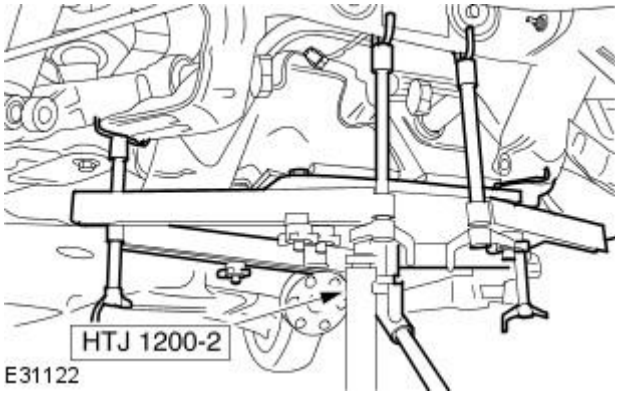


**16.** Install the special tool to support the rear subframe.

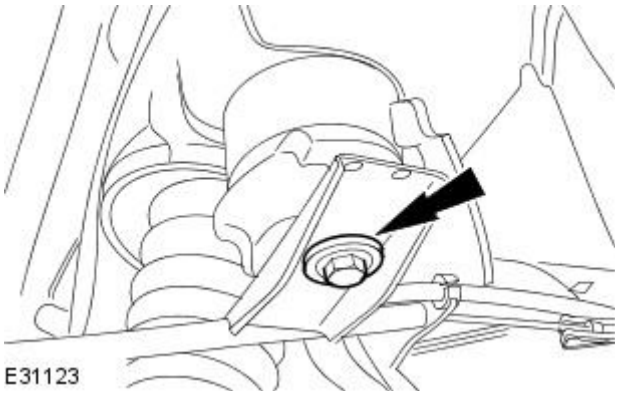


**17.** NOTE: Left-hand shown, right-hand similar.

Remove the rear subframe rear retaining bolt.

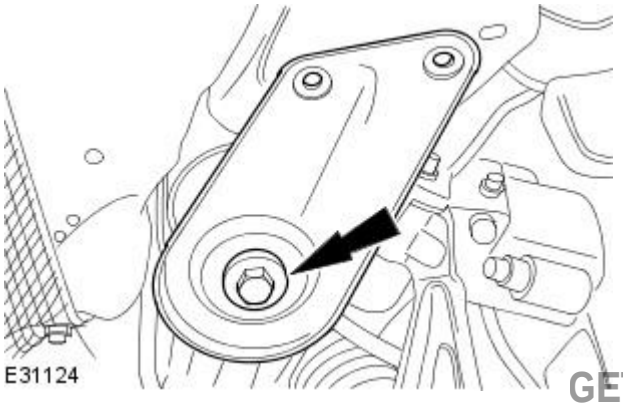


**18.** NOTE: Left-hand shown, right-hand similar.

Remove the rear subframe front retaining bolt.

GETtheMANUALS.org

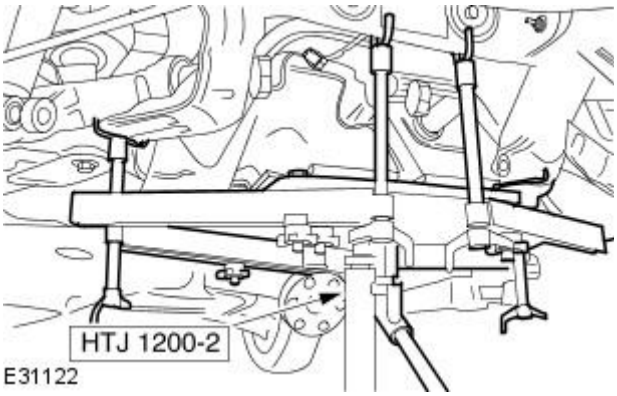


**19.** CAUTION: Make sure the rear subframe does not come into contact with the fuel tank filler pipe.

Lower the rear subframe to a suitable height.

Vehicles built up to 01/2004

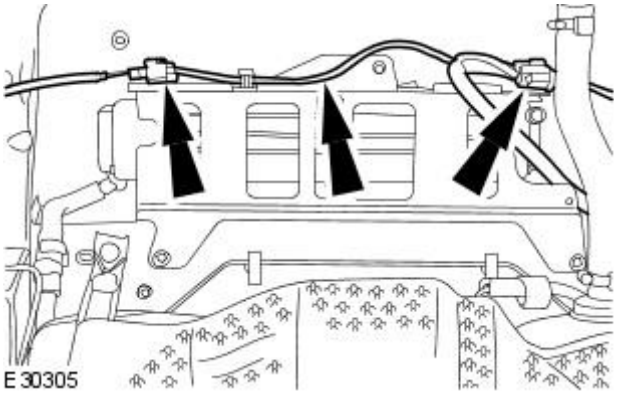


**20.** NOTE: Rear subframe shown removed for clarity.

Detach the wiring harness from the evaporative emission canister.

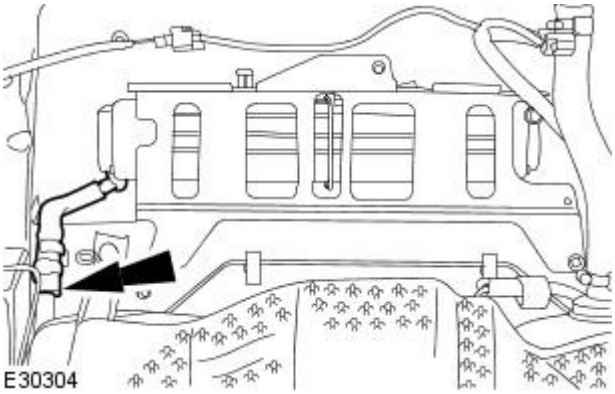


**21.** Disconnect the emission hose.

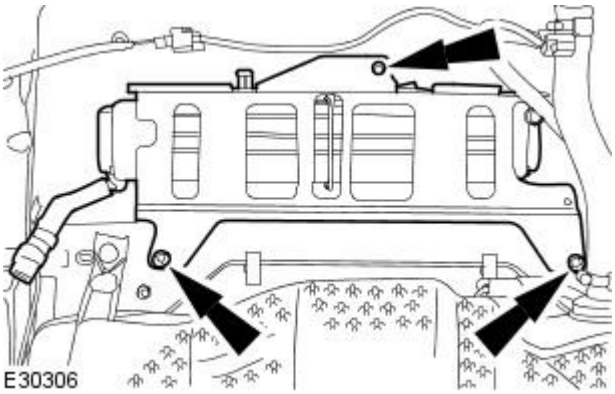


**22.** Detach the evaporative emission canister.

Vehicles built 02/2004 onwards

GETtheMANUALS.org

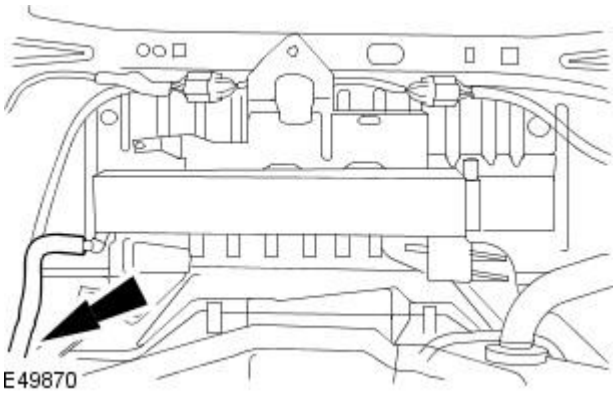


**23.** NOTE: Rear subframe shown removed for clarity.

Disconnect the emission hose.

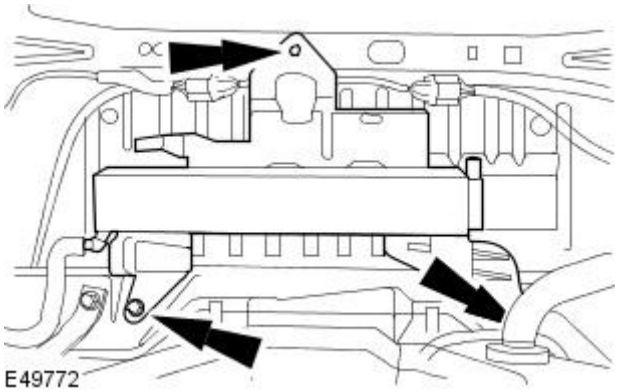


**24.** Detach the evaporative emission canister.

All vehicles

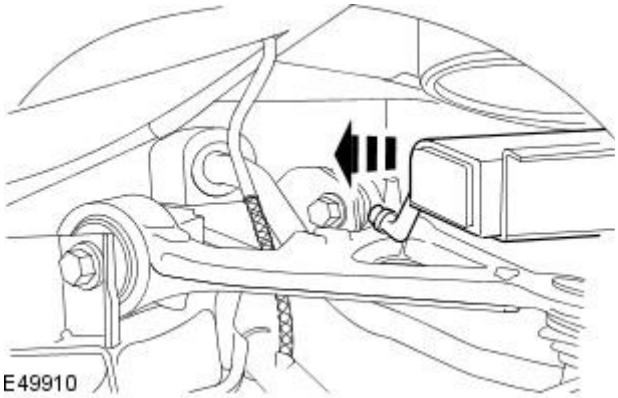


**25.** Remove the evaporative emission canister.

## Installation

All vehicles

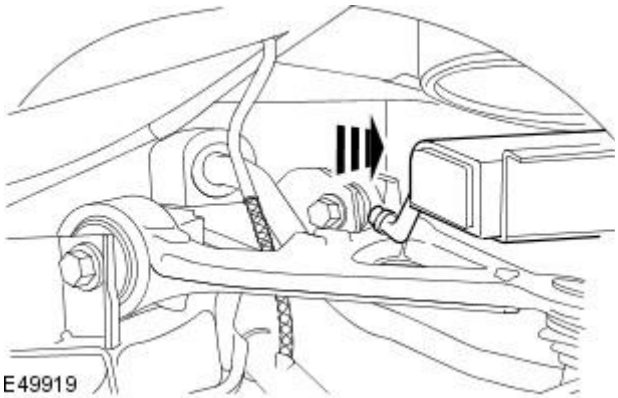


**1.** Install the evaporative emission canister.

Vehicles built up to 01/2004

GETtheMANUALS.org

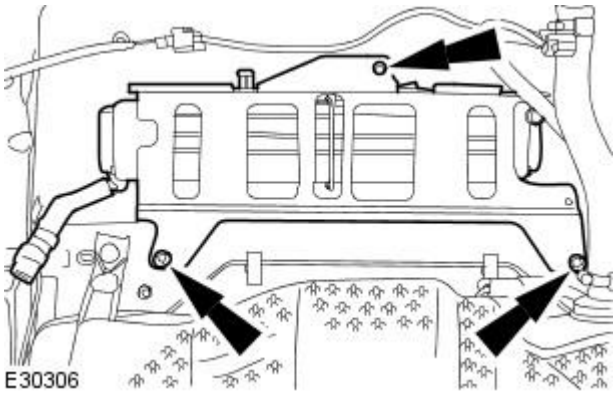


**2.** To install, reverse the removal procedure.

1. Tighten to 10 Nm.

Vehicles built 02/2004 onwards

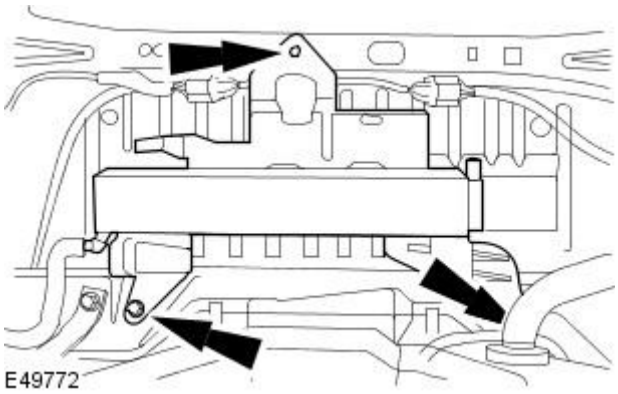


**3.** To install, reverse the removal procedure.

1. Tighten to 10 Nm.

All vehicles

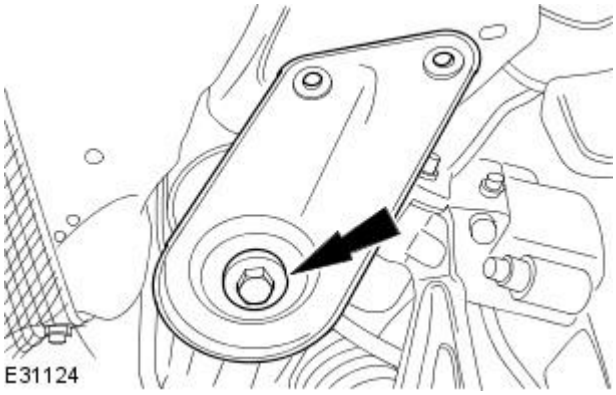


**4.** NOTE: Left-hand shown, right-hand similar.

Loosely install the rear subframe front bolt.

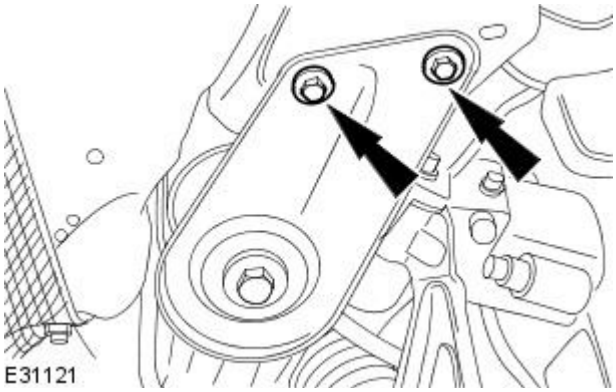


**5.** Loosely install the rear subframe reinforcement plate bolts

GETtheMANUALS.org

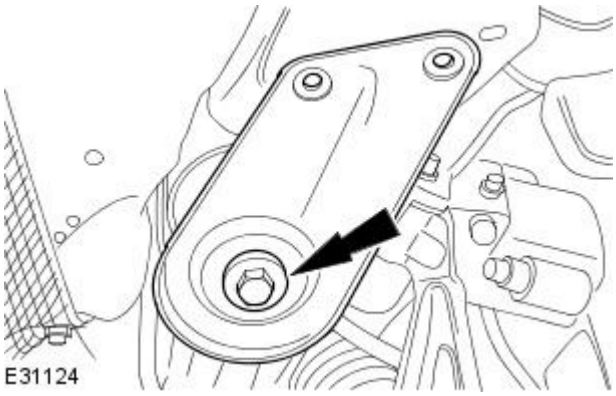


**6.** Tighten to 125 Nm.

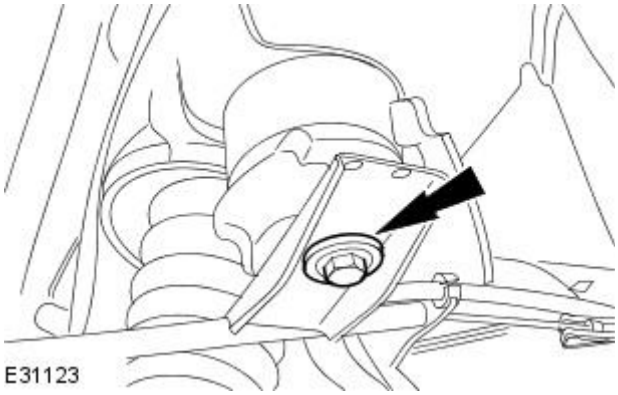


**7.** NOTE: Left-hand shown, right-hand similar.

Install the rear subframe rear retaining bolt.

- Tighten to 125 Nm.

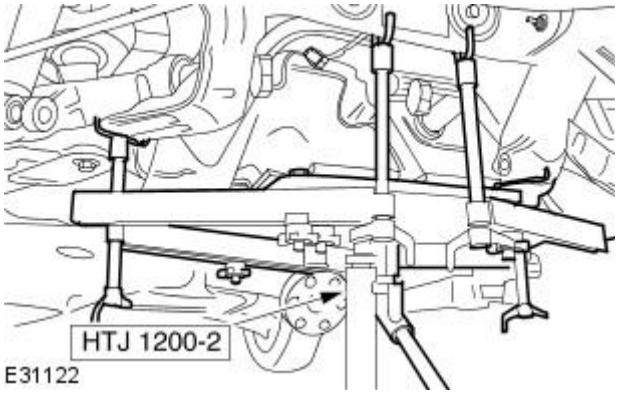


**8.** Remove the special tool.

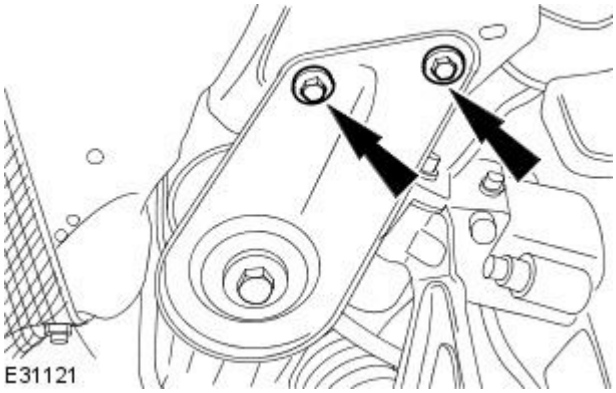


**9.** NOTE: Left-hand shown, right-hand similar.

Install the rear subframe reinforcement plate retaining bolts.

- Tighten to 47 Nm.

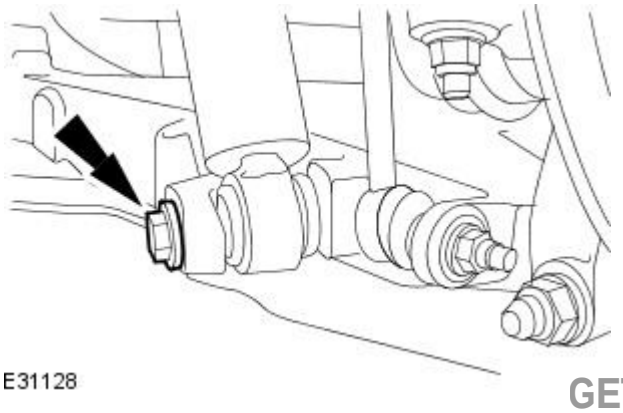


**10.** Attach the right-hand shock absorber.

1. Tighten to 133 Nm.

GETtheMANUALS.org

**11.** Install the left-hand shock absorber and spring assembly.

For additional information, refer to: Shock Absorber and Spring Assembly (204-02 Rear Suspension, Removal and Installation).

**12.** NOTE: Left-hand shown, right-hand similar.

Attach the wiring harness.

Vehicles with Brembo brakes

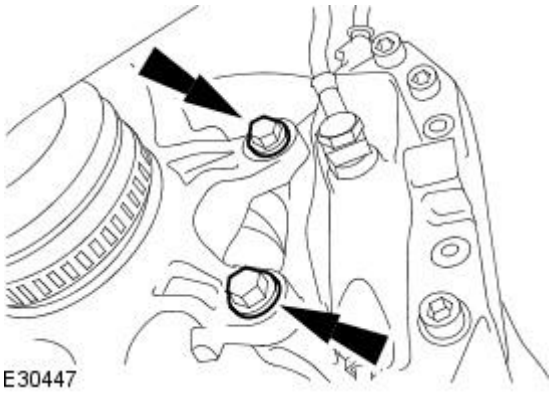


**13.** CAUTION: The brake caliper must be supported at all times.

• NOTE: Left-hand shown, right-hand similar.

Attach the brake caliper.

- Remove the tie strap.
- Install new brake caliper retaining bolts.
- Tighten to 70 Nm.

Vehicles without Brembo brakes

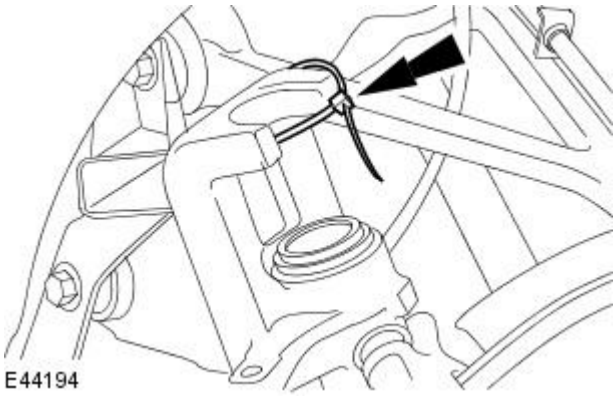


**14.** CAUTION: The brake caliper must be supported at all times.

• NOTE: Left-hand shown, right-hand similar.

Remove the tie strap.

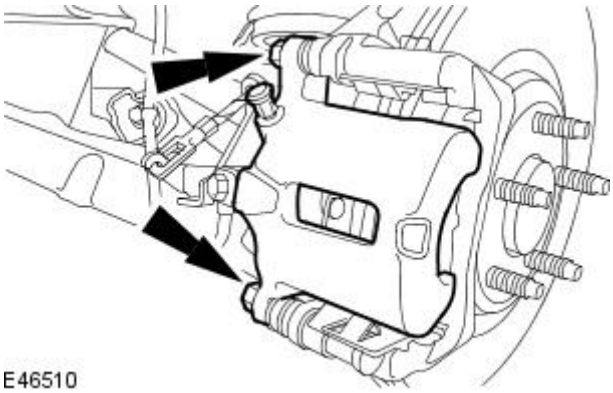


**15.** NOTE: Left-hand shown, right-hand similar.

Attach the caliper.

- Install new brake caliper retaining bolts.
- Tighten to 34Nm.

All vehicles

**16.** Install both rear wheels and tires.
For additional information, refer to: Wheel and Tire (204-04 Wheels and Tires, Removal and Installation).

GETtheMANUALS.org

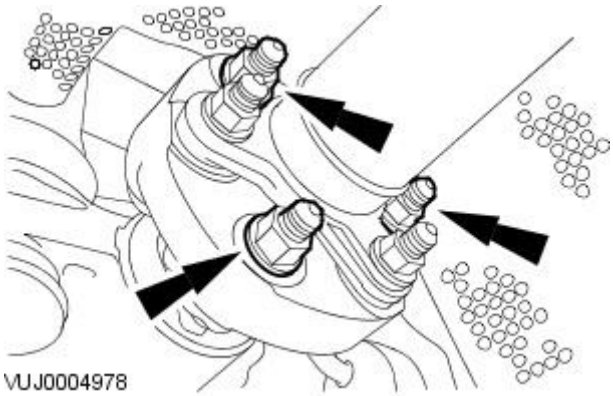


**17.** Attach the driveshaft to the rear drive axle flange.

- Tighten to 88 Nm.

**18.** Install the front muffler and tail pipes.

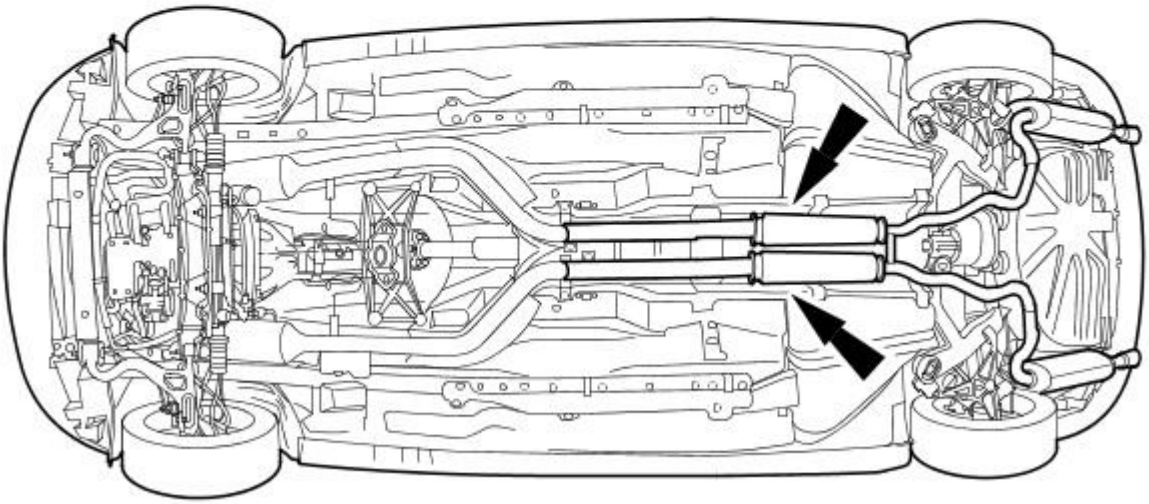


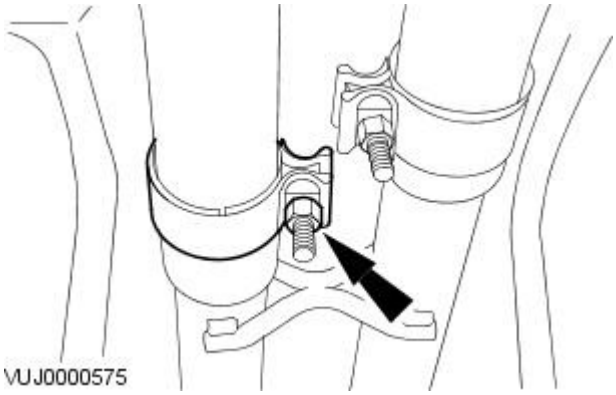


**19.** NOTE: Left-hand shown, right-hand similar.

Tighten both catalytic converter retaining clamps.

GETtheMANUALS.org

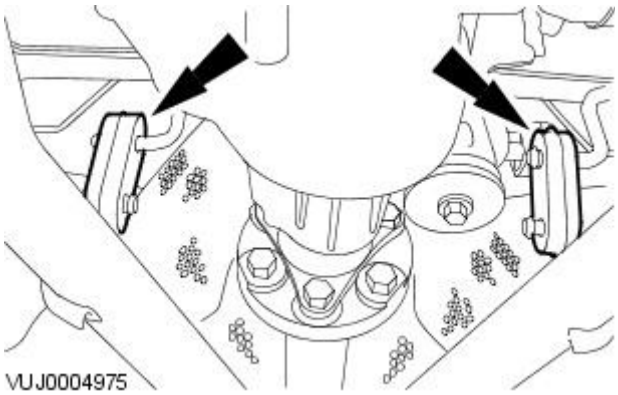


**20.** CAUTION: Using a suitable transmission jack, support the intermediate muffler.

Attach the front muffler exhaust hanger insulators.

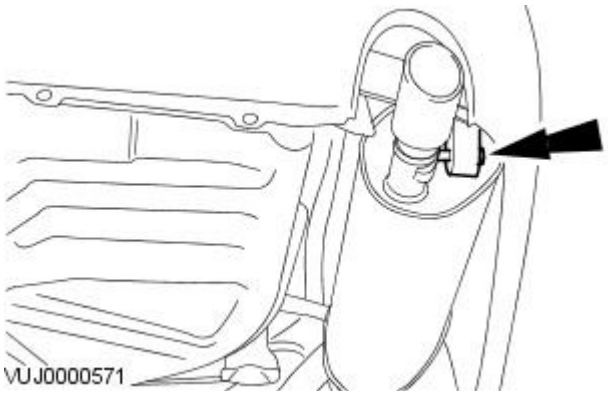


**21.** NOTE: Right-hand shown, Left-hand similar.

Attach the rear muffler and tailpipe exhaust hanger insulator.

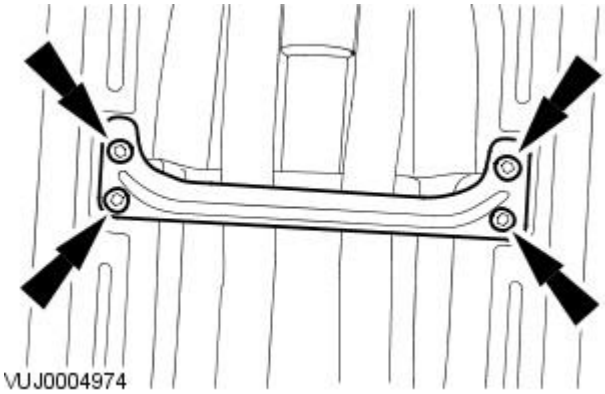


**22.** Install the support bracket.

- Tighten to 6 Nm.

GETtheMANUALS.org

# Evaporative Emissions - Evaporative Emission CanisterVIN Range: N52048->N99999

Removal and Installation

| Special Tool(s) | |
|---|---|
| 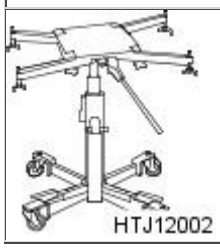 HTJ12002 | Powertrain assembly jack<br><br>HTJ1200-2 |

## Removal

All vehicles

**1.** Remove the left-hand rear shock absorber.
For additional information, refer to: Shock Absorber and Spring Assembly (204-02 Rear Suspension, Removal and Installation).

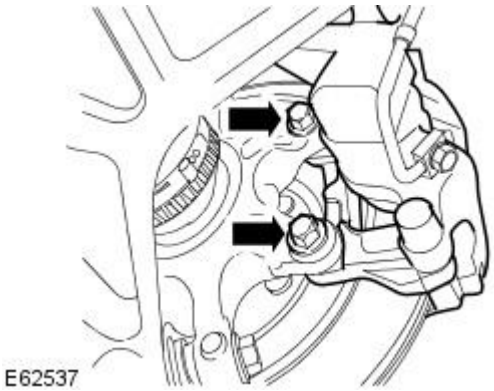
E62537

**2.** CAUTION: The brake caliper must be supported at all times. Failure to follow this instruction may result in damage to the vehicle.

Detach the left-hand rear brake caliper and anchor plate.

- Remove and discard the brake caliper anchor plate retaining bolts.

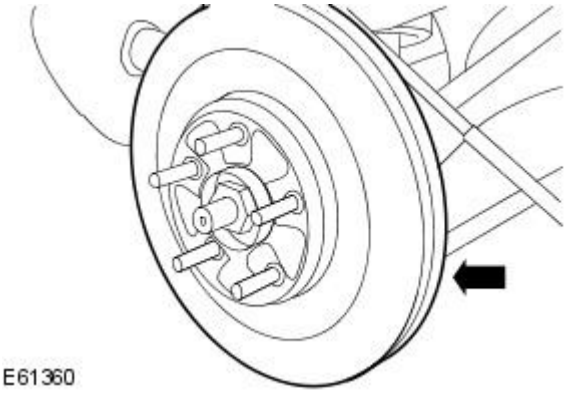
E61360

**3.** CAUTION: The brake caliper must be supported at all times. Failure to follow this instruction may result in damage to the vehicle.

• NOTE: Mark the brake disc position in relation to the hub.

Remove the laft-hand brake disc.

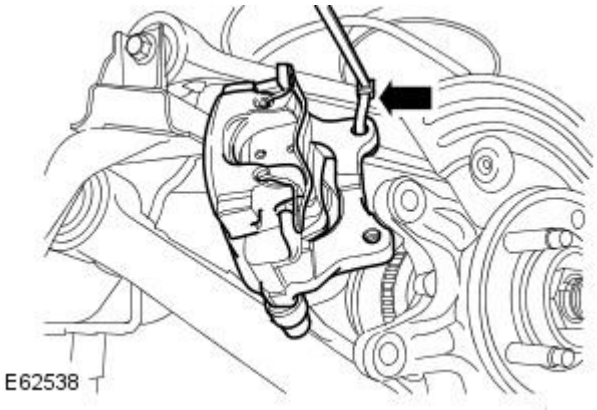
E62538

**4.** CAUTION: The brake caliper must be supported at all times. Failure to follow this instruction may result in damage to the vehicle.

Using a suitable tie strap, secure the left-hand brake caliper to the upper arm.

GETtheMANUALS.org

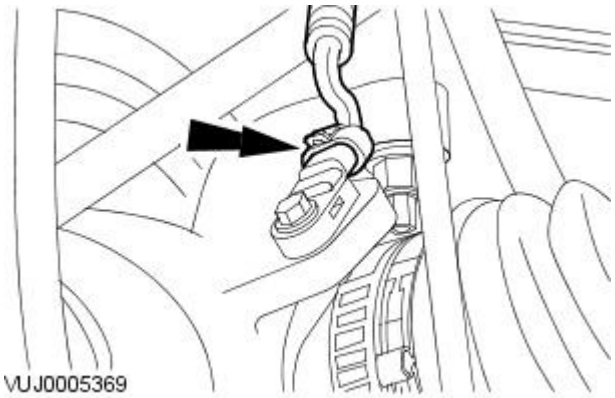


**5.** Disconnect the left-hand rear wheel speed sensor electrical connector.

**6.** Detach the left-hand rear wheel speed sensor wiring harness.

- Reposition the left-hand rear wheel speed sensor wiring harness.

**7.** Remove both of the mufflers and tail pipes.
For additional information, refer to: Muffler and Tailpipe (309-00 Exhaust System, Removal and Installation).

**8.** Remove the front muffler.
For additional information, refer to: Front Muffler (309-00 Exhaust System, Removal and Installation).

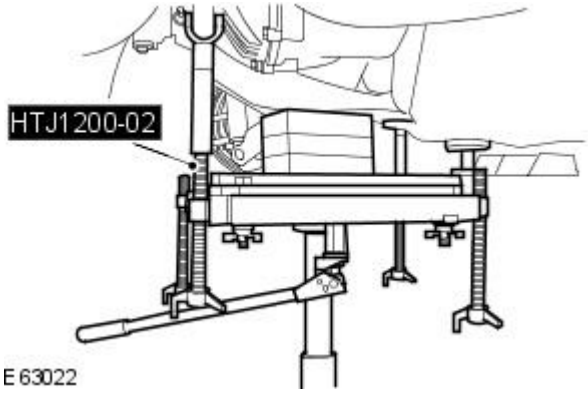


**9.** WARNING: Rotate the special tool height adjustment valve slowly. Failure to follow this instruction may result in personal injury.

Install the special tool to support the left-hand side of the rear subframe.

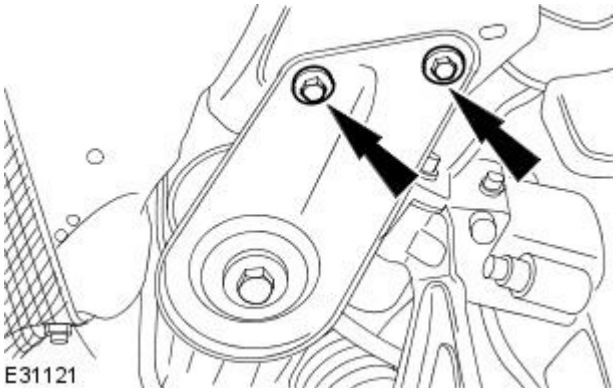


**10.** Remove the rear subframe left-hand reinforcement plate retaining bolts.

GETtheMANUALS.org

**11.** Remove and discard the rear subframe left-hand rear retaining bolt.

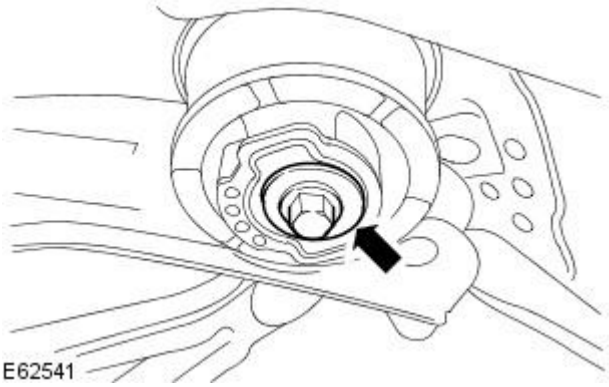


**12.** Remove the rear subframe left-hand reinforcement plate.

- Remove and discard the rear subframe left-hand front retaining bolt.

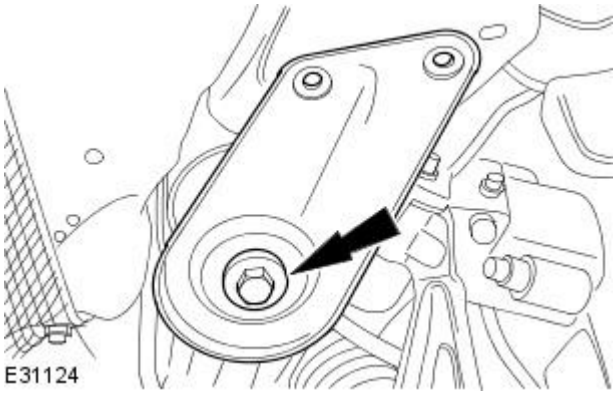


**13.** WARNING: Rotate the special tool height adjustment valve slowly. Failure to follow this instruction may result in personal injury.

• CAUTIONS:

Make sure the rear subframe weight is evenly supported on the special tool. Failure to follow this instruction may result in damage to the vehicle.

Make sure when lowering the rear subframe damage does not occur to the surrounding components. Failure to follow this instruction may result in damage to the vehicle.

Using the special tool, lower the left-hand side of the rear subframe to a maximum of 152mm (6 inch)

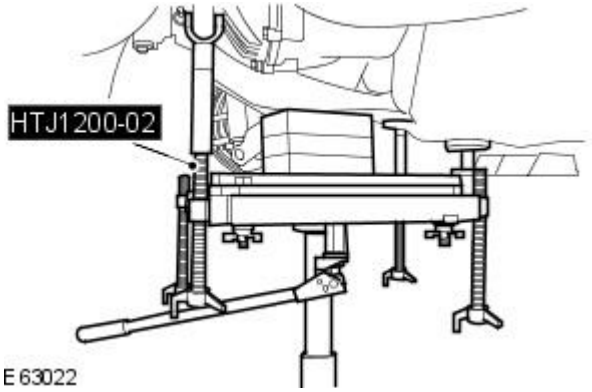


Vehicles with supercharger

**14.** NOTE: Rear subframe shown removed for clarity.

Disconnect the fuel pump driver module electrical connector.

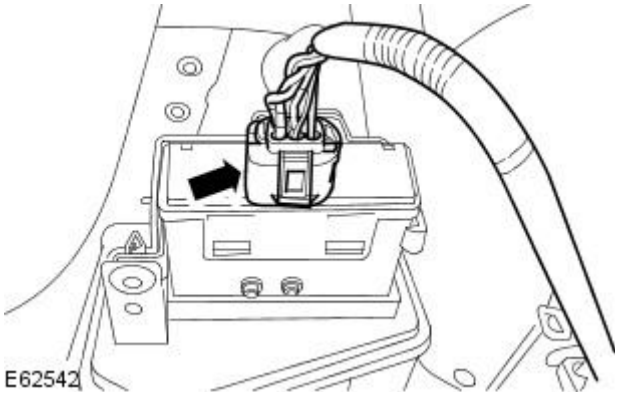


GETtheMANUALS.org

**15.** NOTE: Rear subframe shown removed for clarity.

Remove the fuel pump driver module.

- Remove the retaining clip.

All vehicles

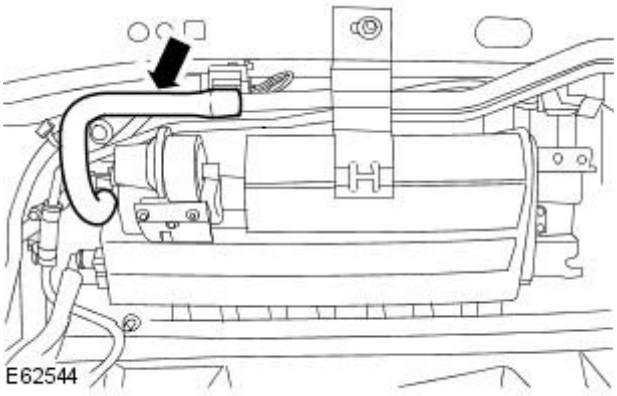


**16.** NOTE: Rear subframe shown removed for clarity.

Disconnect the evaporative emission canister vent solenoid vent hose.

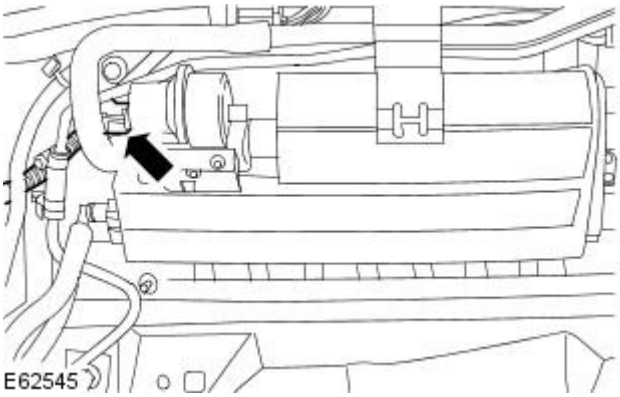


**17.** NOTE: Rear subframe shown removed for clarity.

Disconnect the evaporative emission canister vent solenoid electrical connector.

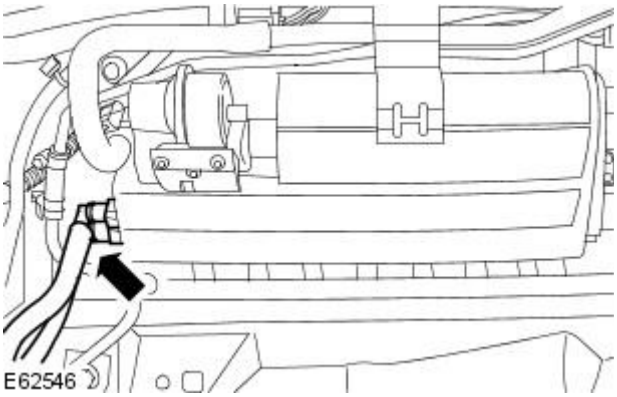


**18.** NOTE: Rear subframe shown removed for clarity.

Disconnect the evaporative emission canister vapor pipes.
For additional information, refer to: Quick Release Coupling (310-00 Fuel System - General Information, General Procedures).

GETtheMANUALS.org

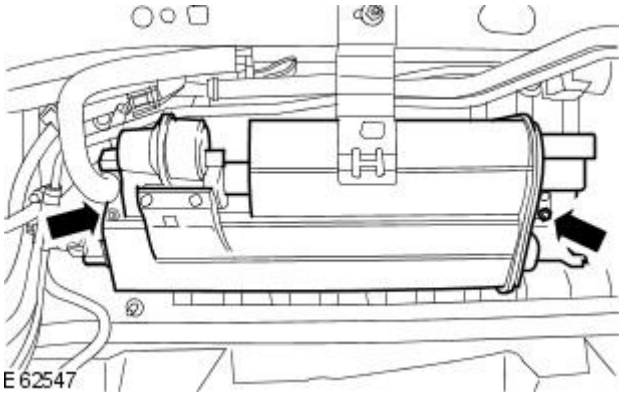


**19.** NOTE: Rear subframe shown removed for clarity.

Detach the evaporative emission canister.

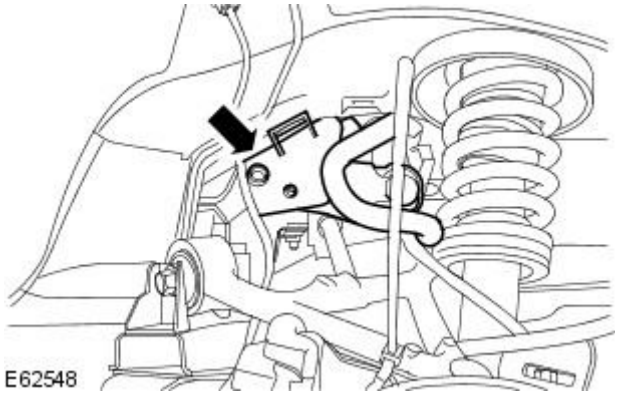


**20.** Remove the evaporative emission canister.

## Installation

All vehicles

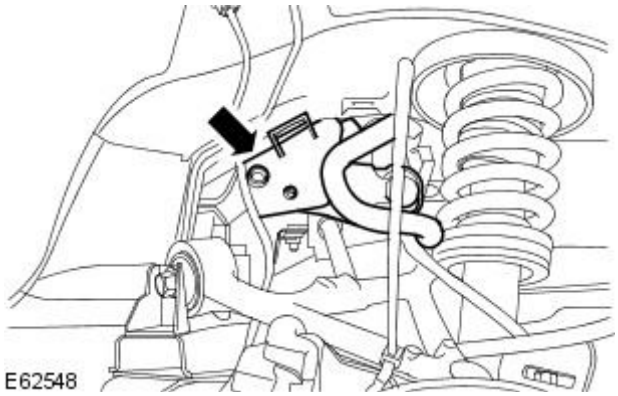


**1.** Install the evaporative emission canister.

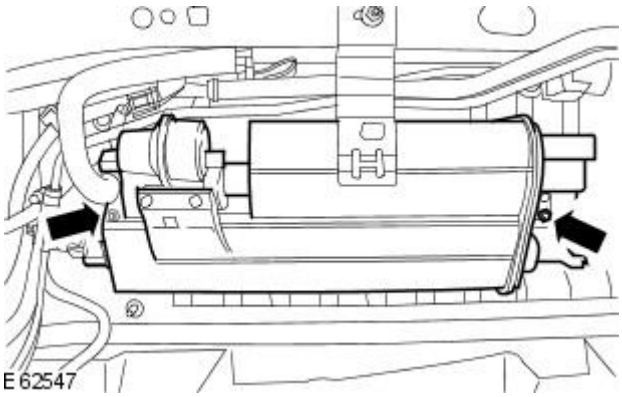


**2.** NOTE: Rear subframe shown removed for clarity.

Attach the evaporative emission canister.

- Tighten to 7 Nm.

GETtheMANUALS.org

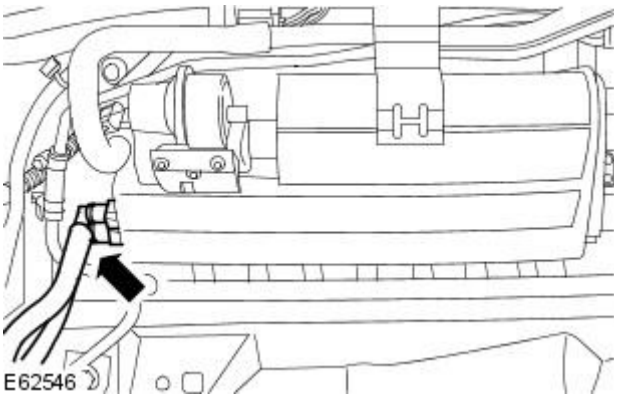


**3.** NOTE: Rear subframe shown removed for clarity.

Connect the evaporative emission canister vapor pipes.
For additional information, refer to: Quick Release Coupling (310-00 Fuel System - General Information, General Procedures).

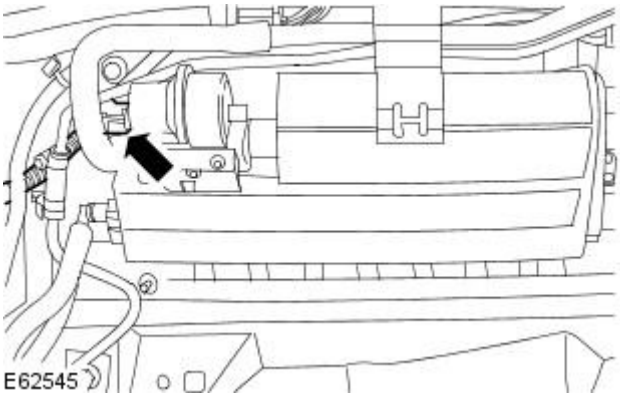


**4.** NOTE: Rear subframe shown removed for clarity.

Connect the evaporative emission canister vent solenoid electrical connector.

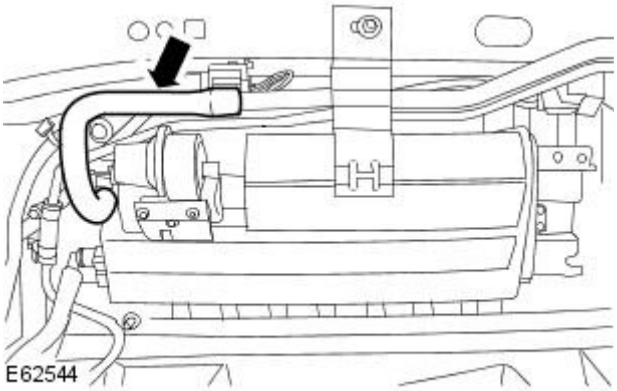


**5.** NOTE: Rear subframe shown removed for clarity.

Connect the evaporative emission canister vent solenoid vent hose.

Vehicles with supercharger

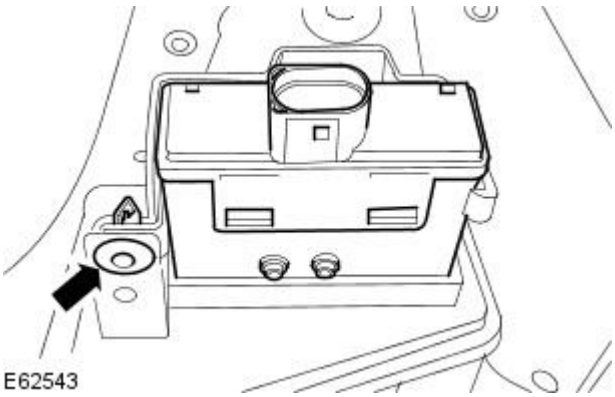


**6.** NOTE: Rear subframe shown removed for clarity.

Install the fuel pump driver module.

- Install the retaining clip.

GETtheMANUALS.org

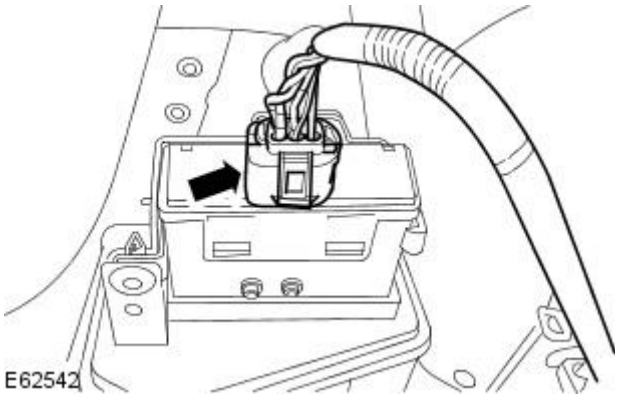


**7.** NOTE: Rear subframe shown removed for clarity.

Connect the fuel pump driver module electrical connector.

All vehicles

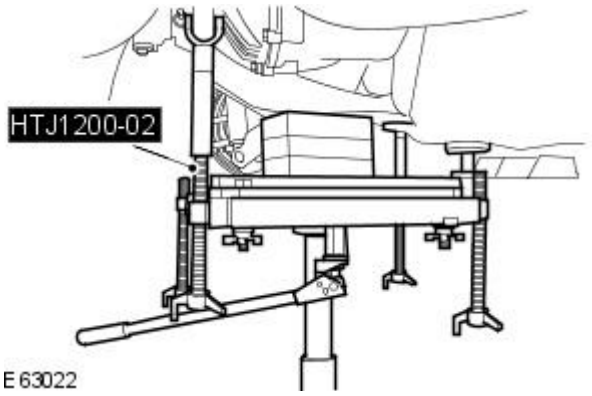


**8.** CAUTIONS:

Make sure the rear subframe weight is evenly supported on the special tool. Failure to follow this instruction may result in damage to the vehicle.

Make sure when raising the rear subframe damage does not occur to the surrounding components. Failure to follow this instruction may result in damage to the vehicle.

Using the special tool, raise the left-hand side of the rear subframe to the vehicle body.

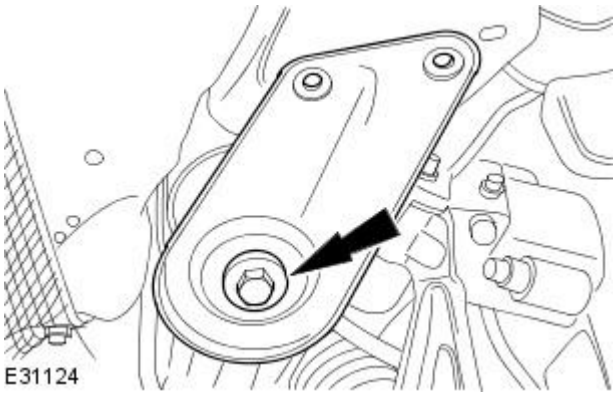


**9.** NOTE: Install new rear subframe retaining bolts.

Loosely install the rear subframe left-hand front retaining bolt.

- Install the rear subframe left-hand reinforcement plate.

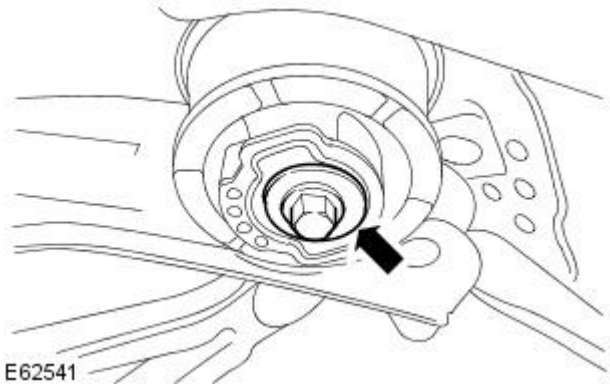


**10.** NOTE: Install new rear subframe retaining bolts.

Install the rear subframe left-hand rear retaining bolt.

- Tighten to 125 Nm.

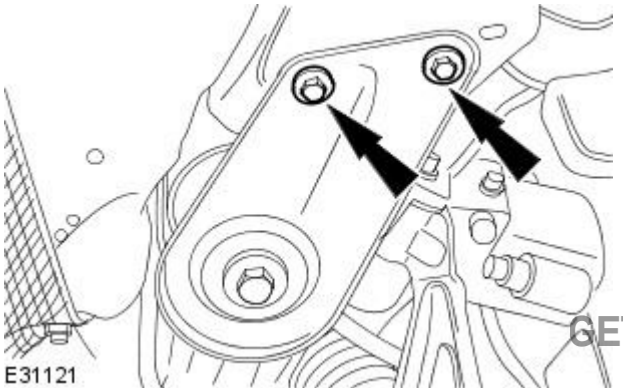


**11.** Install the rear subframe left-hand reinforcement plate retaining bolts.

- Tighten to 47 Nm.

GETtheMANUALS.org

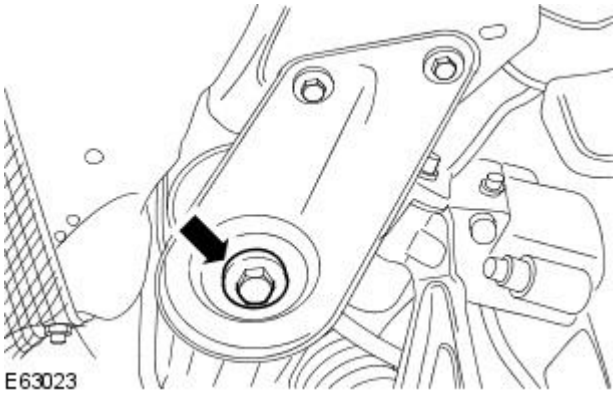


**12.** Tighten the rear subframe left-hand rear retaining bolt.

- Tighten to 125 Nm.

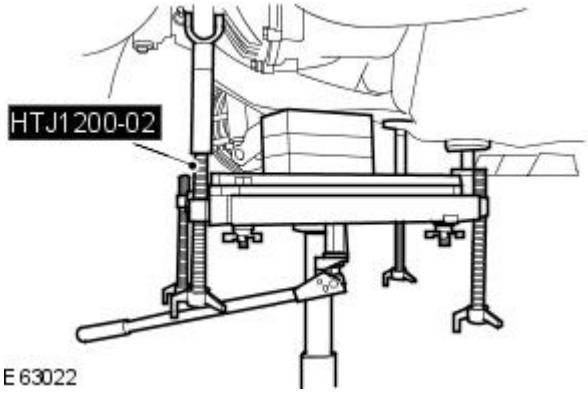


**13.** WARNING: Rotate the special tool height adjustment valve slowly. Failure to follow this instruction may result in personal injury.

Remove the special tool from the rear subframe.

**14.** Attach the front muffler.
For additional information, refer to: Front Muffler (309-00 Exhaust System, Removal and Installation).

**15.** Attach both of the mufflers and tail pipes.
For additional information, refer to: Muffler and Tailpipe (309-00 Exhaust System, Removal and Installation).

**16.** Connect the left-hand rear wheel speed sensor electrical connector.

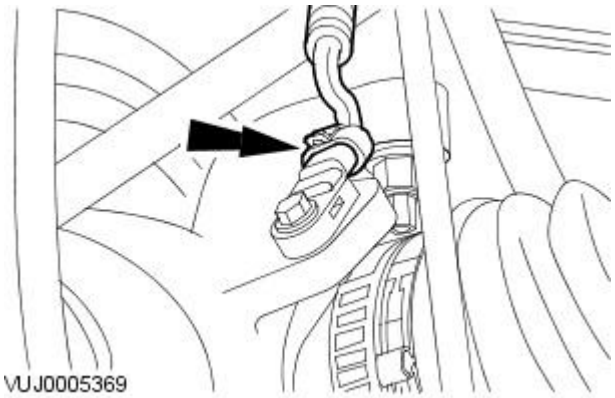


**17.** Attach the left-hand rear wheel speed sensor wiring harness.

GETtheMANUALS.org

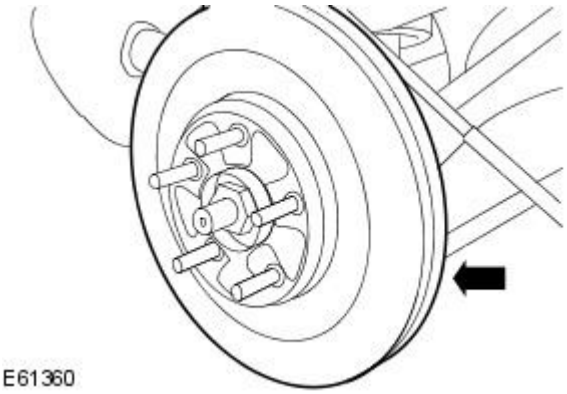


**18.** Install the left-hand brake disc.

- Install the brake disc to the original position in relation to the hub.

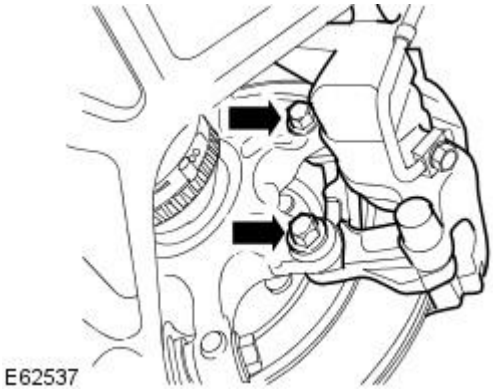


**19.** CAUTION: The brake caliper must be supported at all times. Failure to follow this instruction may result in damage to the vehicle.

• NOTE: Remove and discard the securing tie strap.

• NOTE: Install new brake caliper anchor plate retaining bolts.

Install the left-hand brake caliper and anchor plate.

- Tighten to 103 Nm.

**20.** Install the left-hand rear shock absorber.
For additional information, refer to: Shock Absorber and Spring Assembly (204-02 Rear Suspension, Removal and Installation).

**21.** Lower the vehicle.

GETtheMANUALS.org

# Evaporative Emissions - Evaporative Emission Canister Purge ValveVIN Range: M45255->N52047

Removal and Installation

## Removal

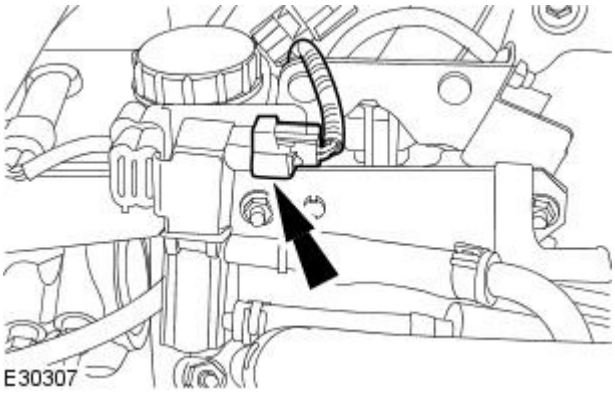


1. Disconnect the evaporative emission canister purge valve electrical connector.

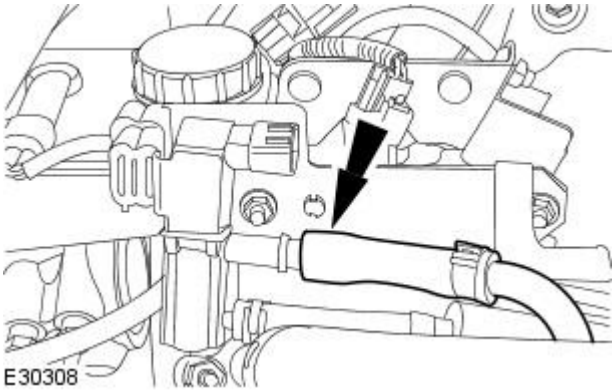


2. Disconnect the evaporative emission canister purge valve outlet hose.

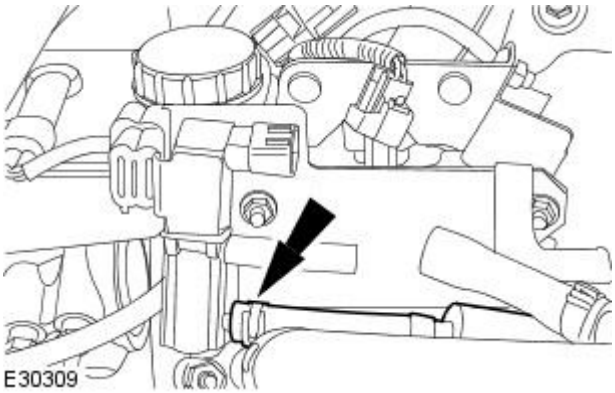


3. Disconnect the evaporative emission canister purge valve inlet hose.

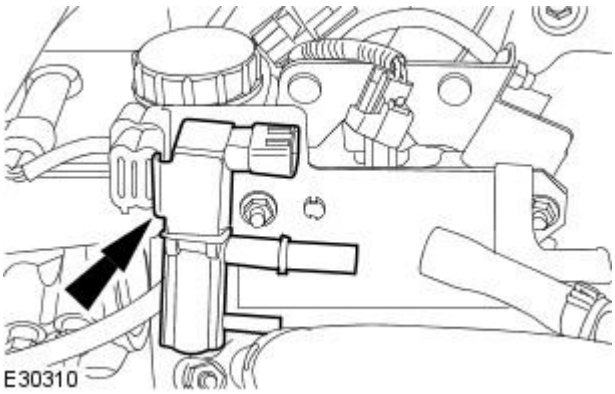


4. Remove the evaporative emission canister purge valve.

## Installation

1. To install, reverse the removal procedure.

GETtheMANUALS.org

# Evaporative Emissions - Evaporative Emission Canister Vent Solenoid

Removal and Installation

## Removal

• WARNINGS:

Do not smoke or carry lighted tobacco or open flame of any type when working on or near any fuel related components. Highly flammable vapors are always present and may ignite. Failure to follow these instructions may result in personal injury.

Do not carry or operate cellular phones when working on or near any fuel related components. Highly flammable vapours are always present and may ignite. Failure to follow these instructions may result in personal injury.

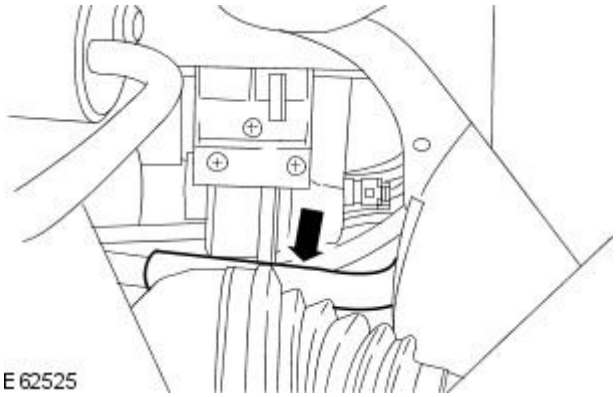


1. Raise and support the vehicle.
   For additional information, refer to: Lifting (100-02, Description and Operation).
2. Disconnect the evaporative emission canister vent solenoid vapor hose.

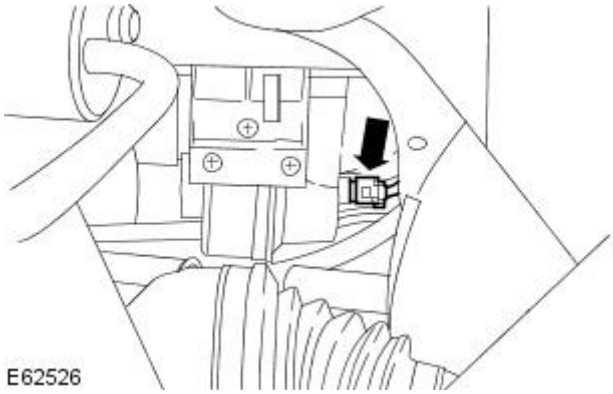


3. Disconnect the evaporative emission canister vent solenoid electrical connector.

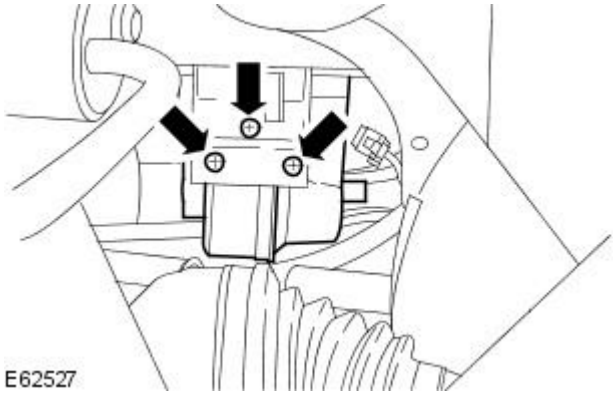


4. Remove the evaporative emission canister vent solenoid.
   - Remove and discard the evaporative emission canister vent solenoid O-ring seal.

## Installation

GETtheMANUALS.org

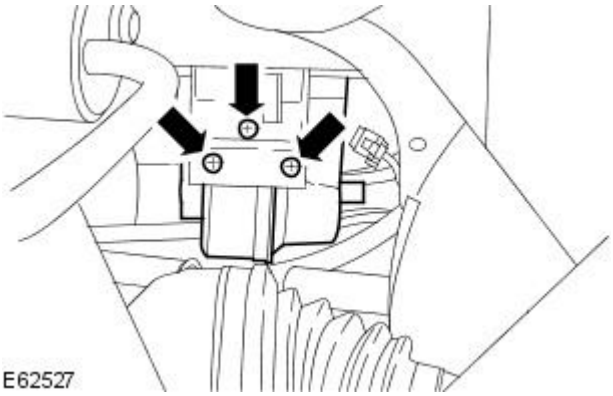


**1.** NOTE: Install a new evaporative emission canister vent solenoid O-ring seal.

To install, reverse the removal procedure.

- Tighten to 6 Nm.

GETtheMANUALS.org

# Evaporative Emissions - Fuel Tank Pressure SensorVehicles Built Up To: 01/2004

Removal and Installation

## Removal

1. Remove the fuel tank. For additional information, refer toSection 310-01 Fuel Tank and Lines
2. Disconnect the fuel pressure sensor electrical connector.

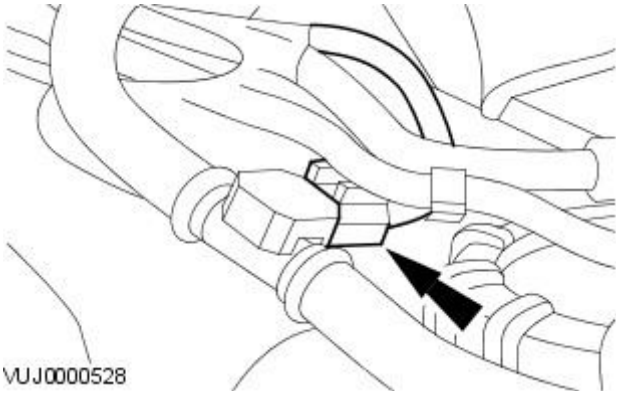


3. Remove the fuel pressure sensor.

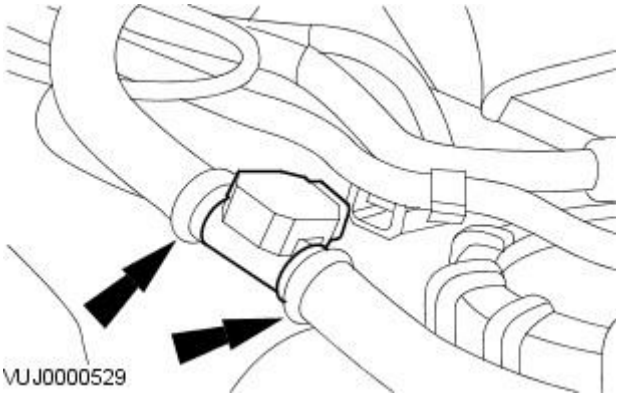


## Installation

1. To install, reverse the removal procedure.

GETtheMANUALS.org

# Electronic Engine Controls - 2.5L NA V6 - AJV6 / 3.0L NA V6 - AJ27 -

**Torque Specifications**

| Description | Nm | lb-ft | lb-in |
|---|---|---|---|
| Camshaft position (CMP) sensor retaining bolt | 7 | - | 62 |
| Heated oxygen sensor (H02S) | 40 | 30 | - |
| Catalyst monitor sensor | 40 | 30 | |
| Crankshaft position (CKP) sensor retaing bolt | 7 | - | 62 |
| Knock sensor retaining bolt | 25 | 18 | - |
| Variable camshaft timing oil control solenoid | 10 | 7 | - |
| Intake manifold tuning valve | 10 | 7 | - |
| Engine coolant temperature (ECT) sensor | 17 | 13 | - |
| Manifold absolute pressure (MAP) sensor | 10 | 7 | - |
| Oil temperature sensor | 15 | 11 | - |

**Lubricants, fluids, sealers and adhesives**

| Description | Specification |
|---|---|
| Sealant | WSK-M4G-328-A3 |

GETtheMANUALS.org

# Electronic Engine Controls - 2.5L NA V6 - AJV6 / 3.0L NA V6 - AJ27 - Electronic Engine Controls

Description and Operation

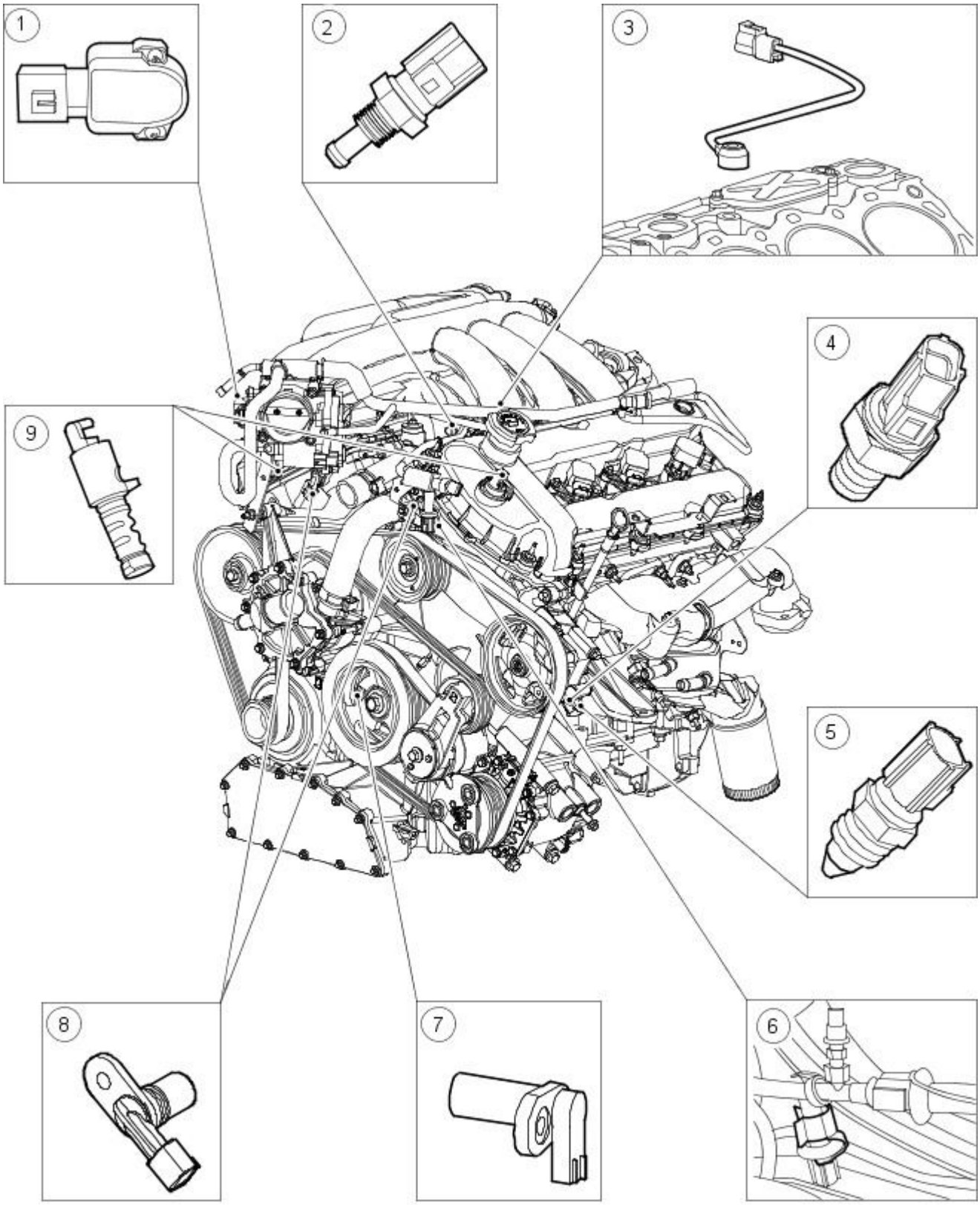


E30343

| Item | Part Number | Description |
|---|---|---|
| 1 | — | Throttle position (TP) sensor |
| 2 | — | Engine coolant temperature (ECT) sensor |
| 3 | — | Knock sensor - LH |
| 4 | — | Oil pressure sensor |
| 5 | — | Oil temperature sensor |
| 6 | — | Fuel pressure sensor |
| 7 | — | Crankshaft position (CKP) sensor |
| 8 | — | Camshaft position (CMP) sensor |
| 9 | — | Variable camshaft timing oil control solenoid |

GETtheMANUALS.org

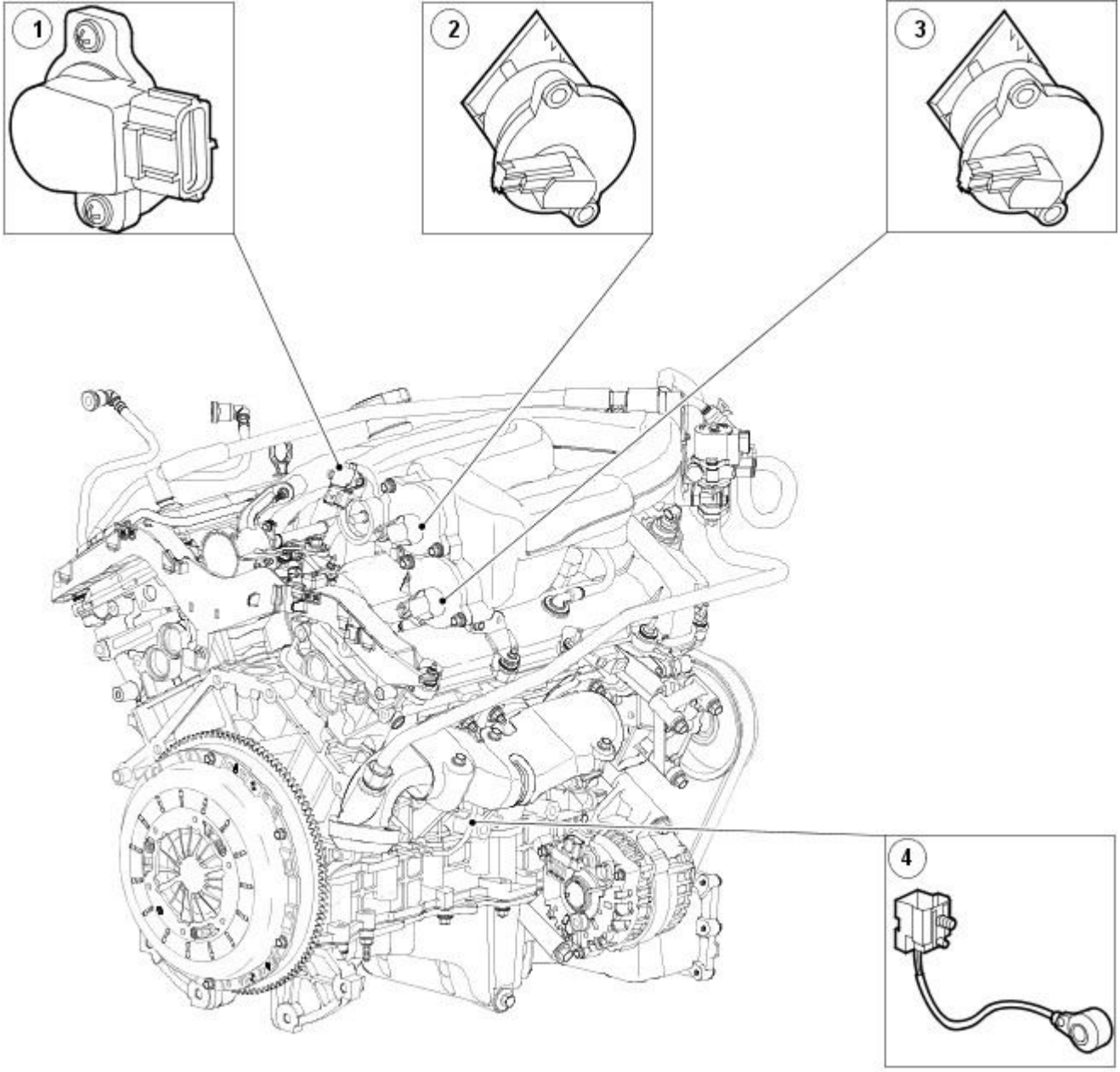


E 30345

| Item | Part Number | Description |
|---|---|---|
| 1 | - | Manifold absolute pressure (MAP) sensor |
| 2 | - | Intake manifold tuning (IMT) valve |
| 3 | - | Intake manifold tuning (IMT) valve |
| 4 | - | Knock sensor - RH |

GETtheMANUALS.org

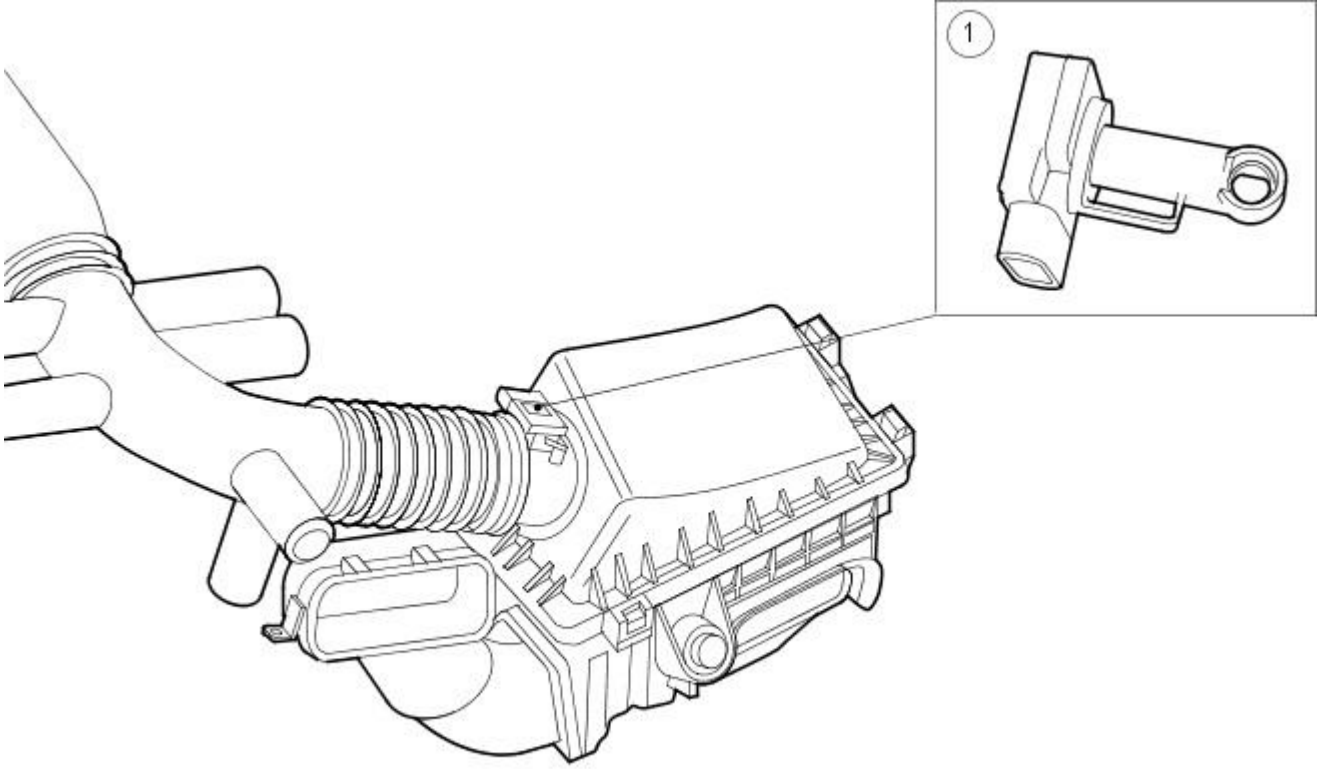


E30344

| Item | Part Number | Description |
|---|---|---|
| 1 | - | Mass air flow (MAF) sensor |

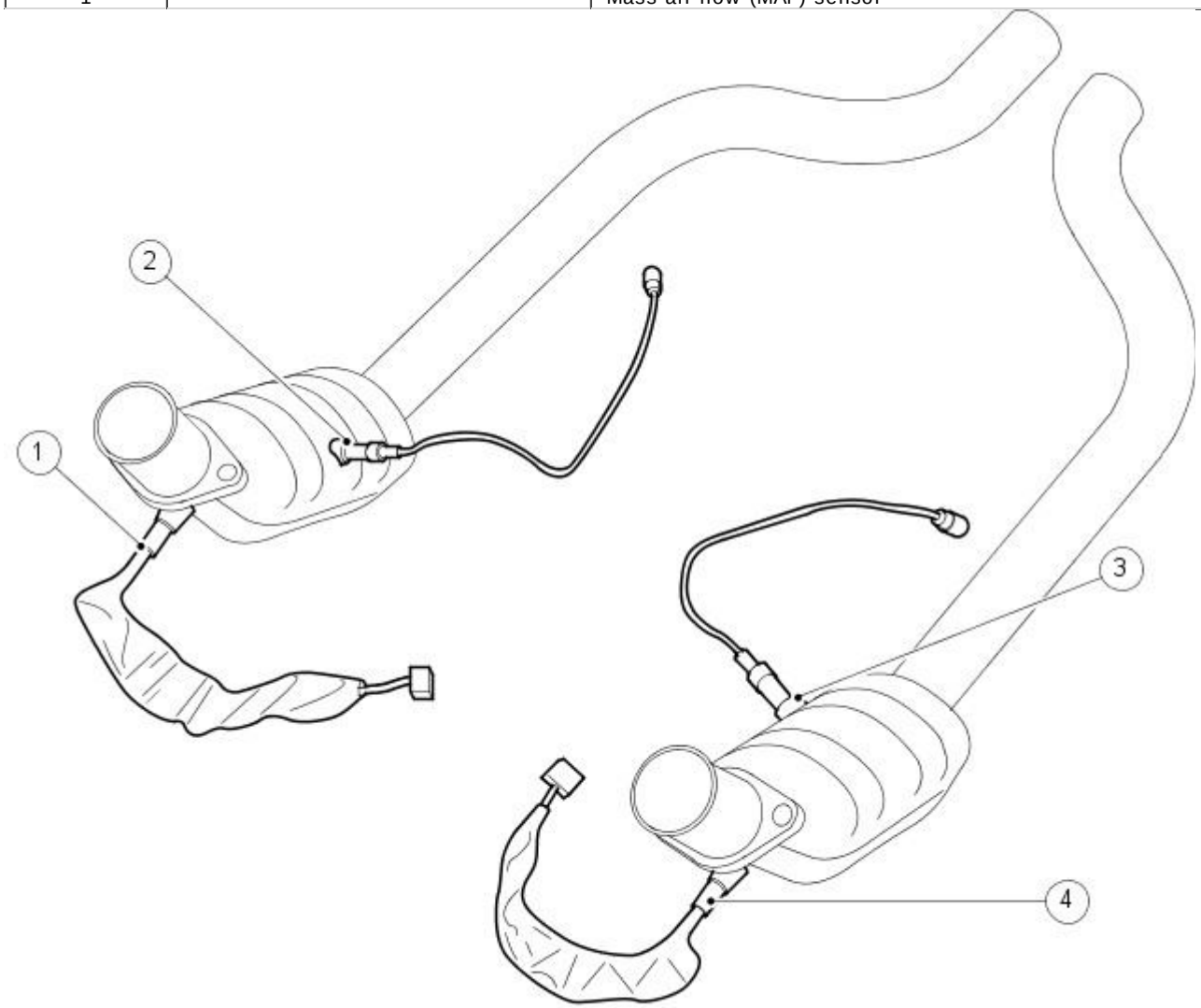


E30438

| Item | Part Number | Description |
|---|---|---|
| 1 | - | Heated oxygen sensor - RH |
| 2 | - | Catalyst monitor sensor - RH |
| 3 | - | Catalyst monitor sensor - LH |
| 4 | - | Heated oxygen sensor (HO2S) - LH |

LEFTHANDMANUALS.org

Engine Control Module (ECM)

The electronic engine control system consists of an engine control module (ECM), located behind the glove compartment, and a number of sensing and actuating devices. The sensors supply the ECM with input signals which relate to the engine operating conditions and driver requirements. The sensor information is evaluated by the ECM using the results to activate the appropriate response from the actuating devices. The system provides the necessary engine control accuracy and adaptability to:

- Minimize exhaust emissions and fuel consumption.
- Provide optimum driver control under all conditions.
- Minimize evaporative emissions.
- Provide system diagnostics.

In addition to these functions the ECM also interfaces with other vehicle systems through the controller area network (CAN).

Camshaft Position (CMP) Sensor

The camshaft position (CMP) sensors monitor the position of both camshafts to allow the ECM to control the phase of the inlet camshafts relative to the position of the crankshaft.

Variable Camshaft Timing Oil Control Solenoid

The variable camshaft timing oil control solenoid is a hydraulic actuator, which advances and retards the inlet camshaft timing, thereby altering the camshaft to crankshaft phasing for optimum engine performance.

Intake Manifold Tuning (IMT) Valve

There are two intake manifold tuning (IMT) valves, an upper and a lower, sometimes referred to as number one and two respectively. They are a two position (open and close) device used to create a variable air intake system. The IMT valve positions are switched by signals from the ECM to optimize torque across the engine's speed and load range. On vehicles fitted with a 2.5L engine the upper IMT valve opens between 4,500 and 6,400 rpm while the lower IMT valve opens between 3,700 and 6,400 rpm. On vehicles fitted with a 3.0L engine the upper IMT valve opens between 4,100 and 6,150 rpm while the lower IMT valve opens between 3,900 and 6,150 rpm.

Knock Sensors (KS)

The knock sensors (KS) detect combustion knock within the engine cylinders and sends a signal to the ECM. The ECM uses this information to gradually adjust the ignition timing until the combustion knock is eliminated.

Mass Air flow (MAF) Sensor

The mass air flow (MAF) sensor informs the ECM of the rate of air flow entering the engine by producing a voltage which is proportional to the rate of air flow into the engine. The voltage produced by the MAF sensor increases as the rate of air flow increases. The ECM also takes into account the density of the air entering the air intake system so that it is possible to maintain the required air to fuel ratio, and to compensate for variations in atmospheric pressure.

Integral to the MAF sensor is the intake air temperature sensor (IAT) which measures the temperature of the air entering the air intake system. The ECM uses this information to compensate for higher than normal air intake temperatures.

Throttle Position (TP) Sensor

The ECM monitors the angle of the throttle blade within the throttle housing through the throttle position (TP) sensor. The TP sends a voltage to the ECM which is proportional to the angle of the throttle plate. The voltage from the TP increases with the angle of the throttle plate. There are two sensor tracks within the TP sensor.

Crankshaft Position (CKP) Sensor

The crankshaft position (CKP) sensor is an inductive pulse generator, which scans protrusions on a pulse ring fitted to the front of the crankshaft to inform the ECM of the crankshaft's position and speed. The CKP sensor produces an alternating voltage. The frequency of this voltage increases proportional to engine speed.

Engine Coolant Temperature (ECT) Sensor

The engine coolant temperature (ECT) sensor is a thermistor type sensor that provides an input signal to the ECM which is proportional to the engine coolant temperature. The ECT sensor is a negative temperature coefficient (NTC) sensor and its resistance decreases with a proportional increase in engine coolant temperature.

Oil Temperature Sensor

The oil temperature sensor is a thermistor type sensor that provides an input signal to the ECM which is proportional to the engine oil temperature.

Oil Pressure Switch

The oil pressure switch is connected to the instrument cluster and is not directly part of the electronic engine control system.

Heated Oxygen Sensor (HO2S)

The heated oxygen sensor (HO2S) is a linear characteristic type sensor, fitted forward of the exhaust system's catalytic converter. The ECM uses this as it's primary sensor to measure the oxygen content of the exhaust gasses within the exhaust system to provide closed-loop fuelling control.

Catalyst Monitor Sensor

The catalyst monitor sensor is a non-linear characteristic type sensor fitted to the exhaust system's catalytic converter. The ECM uses this as it's secondary sensor to measure the oxygen content of the exhaust gasses within the exhaust after they have passed through the catalytic converter. As well as providing additional closed-loop fuelling control the ECM uses this information to determine the efficiency of the catalytic converter.

GETtheMANUALS.org

# Electronic Engine Controls - 2.5L NA V6 - AJV6 / 3.0L NA V6 - AJ27 - Electronic Engine ControlsVIN Range: M45255->N52047

Diagnosis and Testing

1. **1.** Verify the customer concern by operating the system.
2. **2.** Visually inspect for obvious signs of mechanical and electrical damage.

**Visual Inspection Chart**

| Mechanical | Electrical |
|---|---|
| • Engine oil level<br>• Cooling system coolant level<br>• Fuel Contamination<br>• Throttle body | • Fuses. (9, 31, 32, 37)<br>• Wiring harness<br>• Electrical connector(s)<br>• Sensor(s)<br>• Engine control module (ECM) |

3. **3.** Verify the following systems are working correctly:

- Air intake system
- Cooling system
- Charging system
- Fuel charging system

4. **4.** If an obvious cause for an observed or reported concern is found, correct the cause (if possible) before proceeding to the next step.
5. **5.** If the concern is not visually evident and the approved Jaguar diagnostic system is not available, use a fault code reader to retrieve the fault codes before proceeding to the Diagnostic Trouble Code (DTC)s Index Chart.
6. **6.** Make sure that a power supply is present to the ECM from fuse 32 of the engine compartment fuse box before carrying out diagnostic work on the electronic engine control system.

**Diagnostic Trouble Code (DTC) Index**

| DTC | Description | Possible Source | Action |
|---|---|---|---|
| P0116, P0117, P0118, P0125 | Concern with engine coolant temperature (ECT) sensor | • ECT sensor.<br>• ECT sensor circuit(s)<br>• Low/contaminated coolant<br>• Thermostat failure<br>• Overheating | GO to Pinpoint Test A. |
| P0128, P1474 | Concern with engine temperature, set by ECT sensor inputs | • Thermostat<br>• ECT sensor<br>• ECT sensor circuit(s)<br>• Water pump malfunction | Mechanical check of thermostat. Mechanical check of water pump.GO to Pinpoint Test A. |
| P0335, P0336 | Concern with crankshaft position (CKP) sensor | • CKP sensor.<br>• CKP sensor circuit(s)<br>• CKP sensor air gap.<br>• CKP sensor debris. | GO to Pinpoint Test B. |
| P0340, P0341 | Concern with RH camshaft position (CMP) sensor | • CMP sensor.<br>• CMP sensor circuit(s)<br>• CMP sensor air gap.<br>• CMP sensor debris. | GO to Pinpoint Test C. |
| P1340, P1341, P0345, P0346 | Concern with LH camshaft position (CMP) sensor | • CMP sensor.<br>• CMP sensor circuit(s)<br>• CMP sensor air gap.<br>• CMP sensor debris. | GO to Pinpoint Test D. |
| P0031, P0032 | Concern with RH heated oxygen sensor (HO2S 1/1) heater | • H02S 1/1 failure.<br>• H02S 1/1 circuit(s)<br>• fuse 38. | GO to Pinpoint Test E. |
| P0181, P0182, P0183 | Concern with fuel temperature sensor | • Fuel temperature sensor.<br>• Fuel temperature sensor circuit(s) | GO to Pinpoint Test F. |
| P0327, P0328, P1648 | Concern with knock sensor (KS) right-hand | • KS<br>• KS circuit(s)<br>• Poor contact with cylinder block.<br>• ECM failure. | GO to Pinpoint Test G. |
| P0332, P0333,P1648 | Concern with knock sensor (KS) left-hand | • KS<br>• KS circuit(s)<br>• Poor contact with cylinder block.<br>• ECM failure. | GO to Pinpoint Test H. |
| P0197, P0198, P0196 | Concern with oil temperature sensor | • Oil temperature sensor.<br>• Oil temperature sensor circuit(s) | GO to Pinpoint Test I. |
| P0131, P0132 | Concern with RH heated oxygen sensor (HO2S 1/1) | • HO2S 1/1<br>• HO2S 1/1 circuit(s) | GO to Pinpoint Test J. |

GETtheMANUALS.org

| DTC | Description | Possible Source | Action |
|---|---|---|---|
| P0133 | Concern with RH heated oxygen sensor (HO2S 1/1). Slow response | • Engine misfire.<br>• H02S 1/1 disconnected.<br>• H02S 1/1 mechanical damage.<br>• H02S 1/1 to ECM wiring fault.<br>• H02S 1/1 short circuit to ground.<br>• H02S 1/1 wiring shield open circuit.<br>• H02S 1/1 heater circuit fault.<br>• Exhaust leak.<br>• Low exhaust temperature.<br>• Injector flow partially blocked.<br>• Catalyst efficiency decrease.<br>• H02S 1/1 failure. | GO to Pinpoint Test J. |
| P1646 | Concern with RH heated oxygen sensor (HO2S 1/1) | • H02S 1/1 heater failure.<br>• H02S 1/1 sensing circuit, short circuit to ground.<br>• H02S 1/1 sensing circuit, short circuit to high voltage.<br>• H02S 1/1 sensing circuit, open circuit.<br>• H02S 1/1 high resistance in wiring harness.<br>• ECM failure. | GO to Pinpoint Test J. |
| P0037, P0038, P0137, P0138 | Concern with RH catalyst monitor sensor. (H02S 1/2) | • H02S 1/2<br>• H02S 1/2 circuit(s)<br>• Fuse 38. | GO to Pinpoint Test K. |
| P0140 | Concern with RH catalyst monitor sensor. (H02S 1/2) | • Exhaust leak.<br>• Low exhaust temperature.<br>• Rich running mixture. | Inspect exhaust system,<br>REFER to: Exhaust System - VIN Range: M45255->N13088 (309-00 Exhaust System, Diagnosis and Testing). |
| P0151, P0152 | Concern with LH heated oxygen sensor (HO2S 2/1) | • HO2S 2/1<br>• HO2S 2/1 circuit(s) | GO to Pinpoint Test L. |
| P0153 | Concern with LH heated oxygen sensor (HO2S 2/1) Slow response | • Engine misfire.<br>• H02S 2/1 disconnected.<br>• H02S 2/1 mechanical damage.<br>• H02S 2/1 to ECM wiring fault.<br>• H02S 2/1 short circuit to ground.<br>• H02S 2/1 wiring shield open circuit.<br>• H02S 2/1 heater circuit fault.<br>• Exhaust leak.<br>• Low exhaust temperature.<br>• Injector flow partially blocked.<br>• Catalyst efficiency decrease.<br>• H02S 2/1 failure. | GO to Pinpoint Test L. Refer to pinpoint tests for components listed.<br>REFER to: Exhaust System - VIN Range: M45255->N13088 (309-00 Exhaust System, Diagnosis and Testing) /<br>Fuel Charging and Controls - VIN Range: M45255->N52047 (303-04A Fuel Charging and Controls - 2.5L NA V6 - AJV6/3.0L NA V6 - AJ27, Diagnosis and Testing). |
| P1647 | Concern with LH heated oxygen sensor (HO2S 2/1) | • H02S 2/1 heater failure.<br>• H02S 2/1 sensing circuit, short circuit to ground.<br>• H02S 2/1 sensing circuit, short circuit to high voltage.<br>• H02S 2/1 sensing circuit, open circuit.<br>• H02S 2/1 high resistance in wiring harness.<br>• ECM failure. | GO to Pinpoint Test L. |
| P0057, P0058, P0157, P0158, | Concern with LH catalyst monitor sensor (HO2S 2/2) | • HO2S 2/2<br>• HO2S 2/2 sensor circuit(s)<br>• Fuse 42. | GO to Pinpoint Test M. |
| P0160 | Concern with LH catalyst monitor sensor (HO2S 2/2) | • Exhaust leak.<br>• Low exhaust temperature.<br>• Rich running mixture. | Inspect exhaust system,<br>REFER to: Exhaust System - VIN Range: M45255->N13088 (309-00 Exhaust System, Diagnosis and Testing). |

GETtheMANUALS.org

| DTC | Description | Possible Source | Action |
|---|---|---|---|
| P0420 | Right-hand catalytic converter efficiency below threshold. Note: Do not replace sensors for this DTC. | • Catalytic converter failure (melted, fractured)<br>• Catalytic converter contaminated (sulphur) | Monitoring conditions<br>• Start engine and bring to normal operating temperature<br>• Allow to idle for 2 minutes<br>• Rev engine to between 2500 and 2700 rpm for 5 minutes<br>• Drive vehicle for at least 1 minute (general conditions)<br>• Check for DTCs<br>• Stop the engine<br>Examine the catalytic converters for damage/contamination. Follow the DTC index for any other codes indicated. |
| P0430 | Concern with LH Catalytic converter system. (efficiency below threshold) | • Catalytic converter failure (melted, fractured)<br>• Catalytic converter contaminated (sulphur) | Monitoring conditions<br>• Start engine and bring to normal operating temperature<br>• Allow to idle for 2 minutes<br>• Rev engine to between 2500 and 2700 rpm for 5 minutes<br>• Drive vehicle for at least 1 minute (general conditions)<br>• Check for DTCs<br>• Stop the engine<br>Examine the catalytic converters for damage/contamination. Follow the DTC index for any other codes indicated. |
| P0101, P0102 | Concern with mass air flow (MAF) sensor | • MAF sensor.<br>• MAF sensor circuit(s)<br>• Blocked air filter.<br>• Air intake leak.<br>• Engine breather leak.<br>• Throttle control malfunction. | Visually inspect components listed. GO to Pinpoint Test N. |
| P0103, P1104 | Concern with mass air flow (MAF) sensor | • MAF sensor.<br>• MAF sensor circuit(s). | GO to Pinpoint Test N. |
| P0111 | Concern with the intake air temperature (IAT) sensor | • MAF sensor.<br>• MAF sensor circuit(s)<br>• Blocked air filter.<br>• Air intake leak.<br>• Engine breather leak. | GO to Pinpoint Test O. |
| P0112, P0113 | Concern with the intake air temperature (IAT) sensor | • Intake air temperature (IAT) sensor.<br>• Intake air temperature (IAT) sensor circuit. | GO to Pinpoint Test O. |
| P0051, P0052 | Concern with the LH heated oxygen sensor (HO2S 2/1) heater | • HO2S 2/1<br>• HO2S 2/1 circuit<br>• Fuse 42 | GO to Pinpoint Test P. |
| P1606 | Concern with ECM relay | • ECM.<br>• ECM relay.<br>• ECM relay circuit(s)<br>• Fuse 31. | GO to Pinpoint Test Q. |
| P0105, , P1107, P1108 | Concern with MAP sensor | • MAP sensor<br>• MAP sensor circuits. | GO to Pinpoint Test R. |
| P0106, P0107, P0108 | Concern with Barometric (HAC) sensor | Barometric sensor within the ECM | ECM internal fault. Please make sure part is not on any form of prior authorisation before replacing. |
| P0010, P1384 | Concern with VVT circuit, Bank 1 | • VVT solenoid and circuit<br>• Oil flow<br>• Camshaft failure. | GO to Pinpoint Test S. REFER to: Engine (303-01A Engine - 2.5L NA V6 - AJV6/3.0L NA V6 - AJ27, Diagnosis and Testing). |
| P0020, P1396 | Concern with VVT circuit, Bank 2 | • VVT solenoid and circuit<br>• Oil flow<br>• Camshaft failure. | GO to Pinpoint Test T. REFER to: Engine (303-01A Engine - 2.5L NA V6 - AJV6/3.0L NA V6 - AJ27, Diagnosis and Testing). |
| P1549 | Concern with IMT Valve 1 circuit | • IMT Valve<br>• IMT Valve circuit. | GO to Pinpoint Test U. |
| P1532 | Concern with IMT Valve 2 circuit | • IMT Valve<br>• IMT Valve circuit. | GO to Pinpoint Test V. |
| P0532 | Concern with air conditioning refrigerant pressure sensor (low input) | • Air conditioning refrigerant pressure sensor.<br>• Air conditioning refrigerant pressure sensor input circuit short circuit to ground or open circuit. | GO to Pinpoint Test W. |

GETtheMANUALS.org

| DTC | Description | Possible Source | Action |
|---|---|---|---|
| P0533 | Concern with air conditioning refrigerant pressure sensor (high input) | • Air conditioning refrigerant pressure sensor.<br>• Air conditioning refrigerant pressure sensor input circuit short circuit to battery. | GO to Pinpoint Test X. |
| P1582 | "Flight Recorder" Data Stored | This code does not indicate a failure of a component or system. | GO to Pinpoint Test Y. |
| P1240, P1241, P1242 | Concern with Sensor Power Supply | • ECM<br>• Power Supply circuits.<br>• Sensors within the circuit. | GO to Pinpoint Test Z. |
| P1243 | Concern with Sensor Ground circuit | • ECM<br>• Sensor Ground circuits.<br>• Sensors within the circuit. | GO to Pinpoint Test AA. |
| P0480 | Concern with Radiator Cooling Fan Module Drive | • Cooling Fan Module<br>• Cooling Fan Module circuits. | GO to Pinpoint Test AB. |
| P0646, P0647 | Concern with Air Conditioning Clutch Relay Drive | • Air Conditioning Clutch Relay<br>• Air Conditioning Clutch Relay circuits. | GO to Pinpoint Test AC. |
| P1516, P1517 | Concern with P/N Switch starting/driving malfunctions | • CJFB.<br>• Ignition relay.<br>• TR sensor.<br>• Inertia switch and circuits. | GO to Pinpoint Test AD. |
| P1245, P1246 | Concern with engine crank signal, high/low voltage | • Starter relay.<br>• ECM.<br>• Ignition switch.<br>• Associated circuits. | GO to Pinpoint Test AE. |
| P1260 | Security input malfunction | • GEM.<br>• Ignition key.<br>• PATS circuits.<br>• CAN network. | Reprogramme key, check CAN network.<br>REFER to: Communications Network - VIN Range: N52048->N99999 (418-00 Module Communications Network, Diagnosis and Testing). |
| P1122, P1123, P1215, P1216, P1344, P0121, P0122, P0123,P1251, P1658, P1631, P1657,P1250, P1254, | Accelerator and throttle. | • Throttle position sensor circuit out of range<br>• Accelerator pedal demand sensor output circuit out of range<br>• Throttle motor relay failure<br>• Accelerator pedal demand sensor ground; open circuit<br>• Throttle limp home spring malfunction. | REFER to: Acceleration Control (310-02 Acceleration Control, Diagnosis and Testing). |
| P0506 | Idle RPM lower than expected | • Air intake restriction.<br>• Accessory drive overload. (defective/seized component)<br>• Throttle valve stuck closed.<br>• Throttle body failure. | REFER to: Intake Air Distribution and Filtering - VIN Range: M45255->N13088 (303-12A Intake Air Distribution and Filtering - 2.5L NA V6 - AJV6/3.0L NA V6 - AJ27, Diagnosis and Testing) / Accessory Drive (303-05 Accessory Drive, Diagnosis and Testing) / Fuel Charging and Controls - VIN Range: M45255->N52047 (303-04A Fuel Charging and Controls - 2.5L NA V6 - AJV6/3.0L NA V6 - AJ27, Diagnosis and Testing). |
| P0507 | Idle RPM higher than expected | • Speed control switches internal steering wheel circuit; Short circuit to ground.<br>• Steering wheel cassette reel; Short circuit to ground.<br>• Cassette reel to ECM circuit; Short circuit to ground.<br>• RESUME switch failure. (stuck ON) | REFER to: Speed Control - VIN Range: M45255->N13088 (310-03 Speed Control, Diagnosis and Testing). |
| P0603, P1611, P1633, P1634, P1656 | Concern with engine control module (ECM) | ECM. | ECM internal fault. Please make sure part is not on any form of prior authorisation before replacing. |
| P0171, P0172, P0174, P0175, P0201, P0202, P0203, P0204, P0205, P0206 | Concern with fuel system too lean/rich | • Fuel injector(s)<br>• Fuel delivery fault. | REFER to: Fuel Charging and Controls - VIN Range: M45255->N52047 (303-04A Fuel Charging and Controls - 2.5L NA V6 - AJV6/3.0L NA V6 - AJ27, Diagnosis and Testing). |

GETtheMANUALS.com

| DTC | Description | Possible Source | Action |
|---|---|---|---|
| P0300, P0301, P0302, P0303, P0304, P0305, P0306, P1313, P1314, P1316 | Concern with ignition system/misfire monitoring | • Ignition system.<br>• Ignition system wiring harness. | REFER to: Engine Ignition - VIN Range: M45255->N52047 (303-07A Engine Ignition - 2.5L NA V6 - AJV6/3.0L NA V6 - AJ27, Diagnosis and Testing). |
| P0351, P0352, P0353, P0354, P0355, P0356 | Concern with ignition primary circuits | • Ignition on-plug coils.<br>• Ignition on-plug circuits. | REFER to: Engine Ignition - VIN Range: M45255->N52047 (303-07A Engine Ignition - 2.5L NA V6 - AJV6/3.0L NA V6 - AJ27, Diagnosis and Testing). |
| P0441, P0442, P0443, P0444, P0445, P0446, P0447, P0448, P0450, P0452, P0453, P0455P0456 | Concern with Evaporative emissions system | • EVAP/purge valve and circuits.<br>• Fuel tank and lines.<br>• Filler cap.<br>• Carbon canister.<br>• Canister close valve and circuits<br>• Fuel tank pressure sensor.<br>• Fuel tank vapor port.<br>• Vapor lines. | REFER to: Evaporative Emissions - VIN Range: M45255->N52047 (303-13 Evaporative Emissions, Diagnosis and Testing). |
| P0460 | Concern with fuel level sensors | • Fuel level sensors<br>• Fuel level sensor circuits<br>• Instrument cluster. | REFER to: Fuel Charging and Controls - VIN Range: M45255->N52047 (303-04A Fuel Charging and Controls - 2.5L NA V6 - AJV6/3.0L NA V6 - AJ27, Diagnosis and Testing). |
| P0560 | ECM battery power supply voltage malfunction. (This DTC could be set due to a fuel injection pressure sensor fault. If P0193 is also set, rectify P0193 first) | ECM battery power supply circuit open circuit or high resistance. | Repair the circuit. For additional information, refer to wiring diagrams. CLEAR the DTC. TEST the system for normal operation. |
| P0565, P0566, P0567, P0568, P0569, P0570, P0831, P0832, P0834, P0835, P1571 | Concern with vehicle speed control steering wheel switches and pedal switches. | • Switchpack.<br>• Switchpack circuits.<br>• Clutch cancel switch.<br>• Clutch safety switch.<br>• Brake on/off switch. | REFER to: Speed Control - VIN Range: M45255->N13088 (310-03 Speed Control, Diagnosis and Testing). |
| P0616, P0617 | Concern with the starter relay circuit | • Starter relay.<br>• Starter relay drive circuit. | REFER to: Starting System (303-06 Starting System, Diagnosis and Testing). |
| P1224, P1229. | Concern with throttle body | • Throttle motor.<br>• Throttle motor relay.<br>• Throttle motor relay circuits.<br>• Throttle body.<br>• Throttle position sensor.<br>• Throttle position sensor circuits.<br>• Throttle return spring.<br>• Limp-home spring. | REFER to: Fuel Charging and Controls - VIN Range: M45255->N52047 (303-04A Fuel Charging and Controls - 2.5L NA V6 - AJV6/3.0L NA V6 - AJ27, Diagnosis and Testing). |
| P1234, P1236, P1338 | Concern with fuel pump commands | • Fuel pump control module.<br>• Fuel pump control module circuits.<br>• ECM. | REFER to: Fuel Charging and Controls - VIN Range: M45255->N52047 (303-04A Fuel Charging and Controls - 2.5L NA V6 - AJV6/3.0L NA V6 - AJ27, Diagnosis and Testing). |
| P1244, P1629, P1632, P1146 | Concern with charging system | • Charging system.<br>• Charging system wiring harness. | REFER to: Charging System - V8 4.2L Petrol/V8 S/C 4.2L Petrol/2.5L NA V6 - AJV6/3.0L NA V6 - AJ27 (414-00 Battery and Charging System - General Information, Diagnosis and Testing). |
| P0191, P0192, P0193 | Concern with fuel pressure sensor | • Fuel pressure sensor circuit(s).<br>• Fuel pressure sensor.<br>• Fuel system leak/blockage. | REFER to: Fuel Charging and Controls - VIN Range: M45255->N52047 (303-04A Fuel Charging and Controls - 2.5L NA V6 - AJV6/3.0L NA V6 - AJ27, Diagnosis and Testing). |
| P0222, P0223 | Concern with throttle position (TP) sensor | • TP sensor.<br>• TP sensor circuit(s). | REFER to: Acceleration Control (310-02 Acceleration Control, Diagnosis and Testing). |
| P1000 | System check not complete since last memory clear | OBD errors not cleared by diagnosis. | Carry out comprehensive component monitor drive cycle. Refer to the DTC section of JTIS, accessed by the icon on the opening page. |
| P1111 | System check complete since last memory clear | This code does not indicate a failure of a component or system. | No action necessary. |
| P1367 | Concern with RH ignition amplifier | • Ignition module.<br>• Ignition module circuits. | REFER to: Engine Ignition - VIN Range: M45255->N52047 (303-07A Engine Ignition - 2.5L NA V6 - AJV6/3.0L NA V6 - AJ27, Diagnosis and Testing). |
| P1368 | Concern with LH ignition amplifier | • Ignition module.<br>• Ignition module circuits. | REFER to: Engine Ignition - VIN Range: M45255->N52047 (303-07A Engine Ignition - 2.5L NA V6 - AJV6/3.0L NA V6 - AJ27, Diagnosis and Testing). |
| P1656 | Concern with TP sensor amplifier circui | ECM. | ECM internal fault. Please make sure part is not on any form of prior authorisation before replacing. |
| P1609 | CPU to CPU communications | ECM. | ECM internal fault. Please make sure part is not on any form of prior authorisation before replacing. |
| P1637, P1638. P1642, P1643, P1699 | Concern with CAN network | CAN network modules and circuits. | REFER to: Communications Network - VIN Range: N52048->N99999 (418-00 Module Communications Network, Diagnosis and Testing). |

GETtheMANUALS.com

## PINPOINT TEST A : DTC P0116, P0117, P0118, P0125. ECT SENSOR.

| TEST CONDITIONS | DETAILS/RESULTS/ACTIONS |
|---|---|
| **A1: CHECK THE ECT SENSOR RESISTANCE** | |
| | 1 Measure the resistance between pins 1 and 2 of the Engine Coolant Temperature sensor. |
| | Is the resistance 2437 to 2464 ohms at 20°C?<br>**Yes**<br>GO to A2.<br>**No**<br>INSTALL a new ECT sensor. CLEAR the DTCs. TEST the system for normal operation. |
| **A2: CHECK THE ENGINE COOLANT TEMPERATURE (ECT) SENSOR SIGNAL WIRE FOR OPEN CIRCUIT** | |
| | 1 Turn the ignition switch to the OFF position. |
| | 2 Disconnect the ECT sensor electrical connector EN18. |
| | 3 Disconnect the ECM electrical connector, EN16. |
| | 4 Measure the resistance between the ECT sensor electrical connector EN18, pin 2 (UY) and the ECM electrical connector EN16, pin 70 (UY). |
| | Is the resistance less than 5 ohms?<br>**Yes**<br>GO to A3.<br>**No**<br>REPAIR the circuit. For additional information, refer to the wiring diagrams. CLEAR the DTCs. TEST the system for normal operation. |
| **A3: CHECK THE ECT SENSOR SIGNAL WIRE FOR A SHORT TO GROUND** | |
| | 1 Measure the resistance between the ECT sensor electrical connector EN18, pin 2 (UY) and EN16, pin 19. |
| | Is the resistance less than 10,000 ohms?<br>**Yes**<br>REPAIR the short to GROUND. For additional information, refer to the wiring diagrams. CLEAR the DTCs. TEST the system for normal operation.<br>**No**<br>GO to A4. |
| **A4: CHECK THE ECT SENSOR GROUND CIRCUIT** | |
| | 1 Measure the resistance between the ECT sensor electrical connector EN18, pin 1 (BG) and GROUND. |
| | Is the resistance less than 5 ohms?<br>**Yes**<br>GO to A5.<br>**No**<br>REPAIR the circuit. For additional information, refer to the wiring diagrams. CLEAR the DTCs. TEST the system for normal operation. |
| **A5: CHECK THE ECT SENSOR GROUND CIRCUIT FOR A SHORT TO BATTERY POSITIVE** | |
| | 1 Turn the ignition switch to the ON position. |
| | 2 Measure the voltage between the ECT electrical connector EN18, pin 1 (BG) and GROUND. |
| | Is a voltage present?<br>**Yes**<br>REPAIR the circuit. For additional information, refer to the wiring diagrams. CLEAR the DTCs. TEST the system for normal operation.<br>**No**<br>GO to A6. |
| **A6: CHECK THE ECT SENSOR CIRCUIT FOR A SHORT TO BATTERY POSITIVE** | |
| | 1 Connect the ECM electrical connector EN16. |
| | 2 Turn the ignition switch to the ON position. |
| | 3 Measure the voltage between the ECT sensor electrical connector EN18, pin 2 (UY) and GROUND. |
| | Is the voltage greater than 5 volts?<br>**Yes**<br>REPAIR the short to battery positive. For additional information, refer to the wiring diagrams. CLEAR the DTCs. TEST the system for normal operation.<br>**No**<br>INSTALL a new ECT sensor. CLEAR the DTCs. TEST the system for normal operation. If the DTC is repeated, INSTALL a new ECM.<br>REFER to: Engine Control Module (ECM) (303-14A Electronic Engine Controls - 2.5L NA V6 - AJV6/3.0L NA V6 - AJ27, Removal and Installation).<br>Before replacing a ECM, contact dealer Technical Support. |

## PINPOINT TEST B : DTC P0335, P0336, P1245, P1246. CRANKSHAFT POSITION (CKP) SENSOR.

| TEST CONDITIONS | DETAILS/RESULTS/ACTIONS |
|---|---|
| **B1: CHECK THE CKP SENSOR FOR CORRECT INSTALLATION** | |
| | 1 Turn the ignition switch to the OFF position. |
| | 2 Check the CKP sensor for correct installation. |
| | Is the CKP sensor correctly installed?<br>**Yes**<br>GO to B7.<br>**No**<br>INSTALL the CKP sensor correctly.<br>REFER to: Crankshaft Position (CKP) Sensor (303-14A Electronic Engine Controls - 2.5L NA V6 - AJV6/3.0L NA V6 - AJ27, Removal and Installation).<br>Reconnect the sensor. CLEAR the DTCs. TEST the system for normal operation. |
| **B2: CHECK THE CKP SENSOR FOR DEBRIS** | |
| | 1 Remove the CKP sensor and inspect for debris. |
| | Is the CKP sensor and flywheel teeth free of debris?<br>**Yes**<br>GO to B3.<br>**No**<br>CLEAN the sensor and wheel. INSTALL the sensor.<br>REFER to: Crankshaft Position (CKP) Sensor (303-14A Electronic Engine Controls - 2.5L NA V6 - AJV6/3.0L NA V6 - AJ27, Removal and Installation).<br>Reconnect the sensor. CLEAR the DTCs. TEST the system for normal operation. |
| **B3: CHECK THE CKP SENSOR RESISTANCE** | |

GETtheMANUALS.org

| | |
|---|---|
| | 1 Measure the resistance between pins 1 and 2 of the CKP sensor. |
| | Is the resistance 250 to 450 ohms?<br>**Yes**<br>GO to B4.<br>**No**<br>INSTALL a new CKP sensor.<br>REFER to: Crankshaft Position (CKP) Sensor (303-14A Electronic Engine Controls - 2.5L NA V6 - AJV6/3.0L NA V6 - AJ27, Removal and Installation).<br>Reconnect the sensor. CLEAR the DTCs. TEST the system for normal operation. |
| **B4: CHECK THE CKP SENSOR GROUND WIRE FOR OPEN CIRCUIT** | |
| | 1 Disconnect the ECM electrical connector PI01. |
| | 2 Disconnect the CKP sensor electrical connector PI21. |
| | 3 Measure the resistance between the CKP sensor electrical connector PI21, pin 1 (B) and the ECM electrical connector PI01, pin 37 (B). |
| | Is the resistance less than 5 ohms?<br>**Yes**<br>GO to B5.<br>**No**<br>REPAIR the circuit. For additional information, refer to the wiring diagrams. Reconnect all connectors. CLEAR the DTCs. TEST the system for normal operation. |
| **B5: CHECK THE CKP SENSOR SIGNAL WIRE FOR OPEN CIRCUIT** | |
| | 1 Measure the resistance between the CKP sensor electrical connector PI21, pin 2 (O) and the ECM electrical connector PI01, pin 36 (O). |
| | Is the resistance less than 5 ohms?<br>**Yes**<br>GO to B6.<br>**No**<br>REPAIR the circuit. For additional information, refer to the wiring diagrams. Reconnect all connectors. CLEAR the DTCs. TEST the system for normal operation. |
| **B6: CHECK THE CKP SENSOR GROUND WIRE FOR A SHORT TO GROUND** | |
| | 1 Measure the resistance between the CKP sensor electrical connector PI21 pin 1 (B) and GROUND. |
| | Is the resistance less than 10,000 ohms?<br>**Yes**<br>REPAIR the short to GROUND. For additional information, refer to the wiring diagrams. Reconnect all connectors. CLEAR the DTCs. TEST the system for normal operation.<br>**No**<br>GO to B7. |
| **B7: CHECK THE CKP SENSOR SIGNAL WIRE FOR A SHORT TO GROUND** | |
| | 1 Measure the resistance between the CKP sensor electrical connector PI21 pin 2 (O) and GROUND. |
| | Is the resistance less than 10,000 ohms?<br>**Yes**<br>REPAIR the short to GROUND. For additional information, refer to the wiring diagrams. Reconnect all connectors. CLEAR the DTCs. TEST the system for normal operation.<br>**No**<br>GO to B8. |
| **B8: CHECK THE CKP SENSOR GROUND WIRE FOR A SHORT TO BATTERY POSITIVE** | |
| | 1 Turn the ignition switch to the ON position. |
| | 2 Measure the voltage between the CKP sensor electrical connector PI21 pin 1 (B) and GROUND. |
| | Is the voltage greater than 5 volts?<br>**Yes**<br>REPAIR the short to battery positive. For additional information, refer to the wiring diagrams. Reconnect all connectors. CLEAR the DTCs. TEST the system for normal operation.<br>**No**<br>GO to B9. |
| **B9: CHECK THE CKP SENSOR SIGNAL WIRE FOR A SHORT TO BATTERY POSITIVE** | |
| | 1 Turn the ignition switch to the ON position. |
| | 2 Measure the voltage between the CKP sensor electrical connector PI21 pin 2 (O) and GROUND. |
| | Is the voltage greater than 5 volts?<br>**Yes**<br>REPAIR the short to battery positive. For additional information, refer to the wiring diagrams. Reconnect all connectors. CLEAR the DTCs. TEST the system for normal operation.<br>**No**<br>INSTALL a new CKP sensor.<br>REFER to: Crankshaft Position (CKP) Sensor (303-14A Electronic Engine Controls - 2.5L NA V6 - AJV6/3.0L NA V6 - AJ27, Removal and Installation).<br>Reconnect all connectors. CLEAR the DTCs. TEST the system for normal operation. If the concern persists INSTALL a new ECM.<br>REFER to: Engine Control Module (ECM) (303-14A Electronic Engine Controls - 2.5L NA V6 - AJV6/3.0L NA V6 - AJ27, Removal and Installation).<br>Before replacing a ECM, contact dealer technical support. |

## PINPOINT TEST C : DTC P0340, P0341: RH CAMSHAFT POSITION (CMP) SENSOR

| TEST CONDITIONS | DETAILS/RESULTS/ACTIONS |
|---|---|
| **C1: CHECK THE RH CMP SENSOR FOR CORRECT INSTALLATION** | |
| | 1 Turn the ignition switch to the OFF position. |
| | 2 Check the CMP sensor for correct installation. |
| | Is the CMP sensor correctly installed?<br>**Yes**<br>GO to C2.<br>**No**<br>INSTALL the CMP sensor correctly.<br>REFER to: Camshaft Position (CMP) Sensor RH (303-14A Electronic Engine Controls - 2.5L NA V6 - AJV6/3.0L NA V6 - AJ27, Removal and Installation).<br>. CLEAR the DTCs. TEST the system for normal operation. |
| **C2: CHECK THE RH CMP SENSOR FOR FOREIGN DEBRIS** | |
| | 1 Remove the CMP sensor and inspect for foreign debris. |

GETtheMANUALS.org

| | |
|---|---|
| | Is the CMP sensor free of foreign debris?<br>**Yes**<br>GO to C3.<br>**No**<br>CLEAN the sensor and wheel. INSTALL the sensor.<br>REFER to: Camshaft Position (CMP) Sensor RH (303-14A Electronic Engine Controls - 2.5L NA V6 - AJV6/3.0L NA V6 - AJ27, Removal and Installation).<br>CLEAR the DTCs. TEST the system for normal operation. |
| **C3: CHECK THE RH CMP SENSOR RESISTANCE** | |
| | 1 Measure the resistance between pins 1 and 2 of the RH Camshaft position sensor. |
| | Is the resistance 450 to 650 ohms?<br>**Yes**<br>GO to C4.<br>**No**<br>INSTALL a new CMP sensor.<br>REFER to: Camshaft Position (CMP) Sensor RH (303-14A Electronic Engine Controls - 2.5L NA V6 - AJV6/3.0L NA V6 - AJ27, Removal and Installation).<br>CLEAR the DTCs. TEST the system for normal operation. |
| **C4: CHECK THE RH CMP SENSOR SIGNAL WIRE FOR OPEN CIRCUIT** | |
| | 1 Disconnect the ECM electrical connector PI01. |
| | 2 Disconnect the CMP sensor electrical connector PI23. |
| | 3 Measure the resistance between the CMP sensor electrical connector PI23, pin 1 (Y) and the ECM electrical connector PI01, pin 94 (Y). |
| | Is the resistance less than 5 ohms?<br>**Yes**<br>GO to C5.<br>**No**<br>REPAIR the circuit. For additional information, refer to the wiring diagrams. CLEAR the DTCs. TEST the system for normal operation. |
| **C5: CHECK THE RH CMP GROUND WIRE FOR OPEN CIRCUIT** | |
| | 1 Measure the resistance between the CMP sensor electrical connector PI23, pin 2 (R) and the ECM electrical connector PI01, pin 95 (R). |
| | Is the resistance less than 5 ohms?<br>**Yes**<br>GO to C6.<br>**No**<br>REPAIR the circuit. For additional information, refer to the wiring diagrams. CLEAR the DTCs. TEST the system for normal operation. |
| **C6: CHECK THE RH CMP SENSOR SIGNAL CIRCUIT FOR A SHORT TO GROUND** | |
| | 1 Measure the resistance between the CMP sensor electrical connector PI23, pin 1 (Y) and GROUND. |
| | Is the resistance less than 10,000 ohms?<br>**Yes**<br>REPAIR the short to GROUND. For additional information, refer to the wiring diagrams. CLEAR the DTCs. TEST the system for normal operation.<br>**No**<br>GO to C7. |
| **C7: CHECK THE RH CMP SENSOR GROUND CIRCUIT FOR A SHORT TO GROUND** | |
| | 1 Measure the resistance between the CMP sensor electrical connector PI23, pin 2 (R) and GROUND. |
| | Is the resistance less than 10,000 ohms?<br>**Yes**<br>REPAIR the short to GROUND. For additional information, refer to the wiring diagrams. CLEAR the DTCs. TEST the system for normal operation.<br>**No**<br>GO to C8. |
| **C8: CHECK THE RH CMP SENSOR SIGNAL CIRCUIT FOR A SHORT TO BATTERY POSITIVE** | |
| | 1 Measure the voltage between the CMP sensor electrical connector PI23, pin 1 (Y) and GROUND. |
| | Is the voltage greater than 5 volt?<br>**Yes**<br>REPAIR the short to battery positive. For additional information, refer to the wiring diagrams. CLEAR the DTCs. TEST the system for normal operation.<br>**No**<br>GO to C9. |
| **C9: CHECK THE RH CMP SENSOR GROUND CIRCUIT FOR A SHORT TO BATTERY POSITIVE** | |
| | 1 Turn the ignition switch to the RUN position. |
| | 2 Measure the voltage between the CMP sensor electrical connector PI23, pin 2 (R) and GROUND. |
| | Is the voltage greater than 5 volt?<br>**Yes**<br>REPAIR the short to battery positive. For additional information, refer to the wiring diagrams. CLEAR the DTCs. TEST the system for normal operation.<br>**No**<br>INSTALL a new CMP sensor.<br>REFER to: Camshaft Position (CMP) Sensor RH (303-14A Electronic Engine Controls - 2.5L NA V6 - AJV6/3.0L NA V6 - AJ27, Removal and Installation).<br>. CLEAR DTCs. TEST the system for normal operation. If the DTC is repeated, INSTALL a new ECM.<br>REFER to: Engine Control Module (ECM) (303-14A Electronic Engine Controls - 2.5L NA V6 - AJV6/3.0L NA V6 - AJ27, Removal and Installation).<br>Before replacing a ECM, contact dealer technical support. |

## PINPOINT TEST D : DTC P0345, P0346, P1340, P1341: LH CAMSHAFT POSITION (CMP) SENSOR

| TEST CONDITIONS | DETAILS/RESULTS/ACTIONS |
|---|---|
| **D1: CHECK THE LH CMP SENSOR FOR CORRECT INSTALLATION** | |
| | 1 Turn the ignition switch to the OFF position. |
| | 2 Check the CMP sensor for correct installation. |
| | Is the CMP sensor correctly installed?<br>**Yes**<br>GO to D2.<br>**No** |

GETtheMANUALS.org

| | |
|---|---|
| | INSTALL the CMP sensor correctly. CLEAR the DTCs. TEST the system for normal operation.<br>REFER to: Camshaft Position (CMP) Sensor LH (303-14A Electronic Engine Controls - 2.5L NA V6 - AJV6/3.0L NA V6 - AJ27, Removal and Installation). |
| **D2: CHECK THE LH CMP SENSOR FOR FOREIGN DEBRIS** | |
| | 1 Remove the CMP sensor and inspect for foreign debris. |
| | Is the CMP sensor free of foreign debris?<br>**Yes**<br>GO to D3.<br>**No**<br>CLEAN the sensor and wheel. INSTALL the sensor.<br>REFER to: Camshaft Position (CMP) Sensor LH (303-14A Electronic Engine Controls - 2.5L NA V6 - AJV6/3.0L NA V6 - AJ27, Removal and Installation).<br>CLEAR the DTCs. TEST the system for normal operation. |
| **D3: CHECK THE LH CMP SENSOR RESISTANCE** | |
| | 1 Measure the resistance between pins 1 and 2 of the LH Camshaft position sensor. |
| | Is the resistance 450 to 650 ohms?<br>**Yes**<br>GO to D4.<br>**No**<br>INSTALL a new CMP sensor.<br>REFER to: Camshaft Position (CMP) Sensor LH (303-14A Electronic Engine Controls - 2.5L NA V6 - AJV6/3.0L NA V6 - AJ27, Removal and Installation).<br>CLEAR the DTCs. TEST the system for normal operation. |
| **D4: CHECK THE LH CMP SENSOR SIGNAL WIRE FOR OPEN CIRCUIT** | |
| | 1 Disconnect the ECM electrical connector PI01. |
| | 2 Disconnect the CMP sensor electrical connector PI22. |
| | 3 Measure the resistance between the CMP sensor electrical connector PI22, pin 1 (N) and the ECM electrical connector PI01, pin 68 (N). |
| | Is the resistance less than 5 ohms?<br>**Yes**<br>GO to D5.<br>**No**<br>REPAIR the circuit. For additional information, refer to the wiring diagrams. CLEAR the DTCs. TEST the system for normal operation. |
| **D5: CHECK THE LH CMP GROUND WIRE FOR OPEN CIRCUIT** | |
| | 1 Measure the resistance between the CMP sensor electrical connector PI22, pin 2 (G) and the ECM electrical connector PI01, pin 69 (G). |
| | Is the resistance less than 5 ohms?<br>**Yes**<br>GO to D6.<br>**No**<br>REPAIR the circuit. For additional information, refer to the wiring diagrams. CLEAR the DTCs. TEST the system for normal operation. |
| **D6: CHECK THE LH CMP SENSOR SIGNAL CIRCUIT FOR A SHORT TO GROUND** | |
| | 1 Measure the resistance between the CMP sensor electrical connector PI22, pin 1 (N) and GROUND. |
| | Is the resistance less than 10,000 ohms?<br>**Yes**<br>REPAIR the short to GROUND. For additional information, refer to the wiring diagrams. CLEAR the DTCs. TEST the system for normal operation.<br>**No**<br>GO to D7. |
| **D7: CHECK THE LH CMP SENSOR GROUND CIRCUIT FOR A SHORT TO GROUND** | |
| | 1 Disconnect the ECM electrical connector, PI01. |
| | 2 Measure the resistance between the CMP sensor electrical connector PI22, pin 2 (G) and GROUND. |
| | Is the resistance less than 10,000 ohms?<br>**Yes**<br>REPAIR the short to GROUND. For additional information, refer to the wiring diagrams. CLEAR the DTCs. TEST the system for normal operation.<br>**No**<br>GO to D8. |
| **D8: CHECK THE LH CMP SENSOR SIGNAL CIRCUIT FOR A SHORT TO BATTERY POSITIVE** | |
| | 1 Turn the ignition switch to the ON position. |
| | 2 Measure the voltage between the CMP sensor electrical connector PI22, pin 1 (N) and GROUND. |
| | Is the voltage greater than 5 volts?<br>**Yes**<br>REPAIR the short to battery positive. For additional information, refer to the wiring diagrams. CLEAR the DTCs. TEST the system for normal operation.<br>**No**<br>GO to D9. |
| **D9: CHECK THE LH CMP SENSOR GROUND CIRCUIT FOR A SHORT TO BATTERY POSITIVE** | |
| | 1 Turn the ignition switch to the ON position. |
| | 2 Measure the voltage between the CMP sensor electrical connector PI22, pin 2 (G) and GROUND. |
| | Is the voltage greater than 5 volts?<br>**Yes**<br>REPAIR the short to battery positive. For additional information, refer to the wiring diagrams. CLEAR the DTCs. TEST the system for normal operation.<br>**No**<br>INSTALL a new CMP sensor.<br>REFER to: Camshaft Position (CMP) Sensor LH (303-14A Electronic Engine Controls - 2.5L NA V6 - AJV6/3.0L NA V6 - AJ27, Removal and Installation).<br>. CLEAR the DTCs. TEST the system for normal operation. If the DTC is repeated, INSTALL a new ECM.<br>REFER to: Engine Control Module (ECM) (303-14A Electronic Engine Controls - 2.5L NA V6 - AJV6/3.0L NA V6 - AJ27, Removal and Installation).<br>Before replacing a ECM, contact dealer technical support. |

**PINPOINT TEST E : DTC P0031, P0032. RH HO2S HEATER.**

GETtheMANUALS.org

| TEST CONDITIONS | DETAILS/RESULTS/ACTIONS |
|---|---|
| **E1: CHECK THE POWER SUPPLY CIRCUIT TO THE RH HO2S HEATER** | |
| | 1 Disconnect HO2S sensor electrical connector, PI10. |
| | 2 Turn the ignition switch to the ON position. |
| | 3 Measure the voltage between the RH HO2S electrical connector PI10, pin 1 (WG) and GROUND. |
| | Is the voltage less than 10 volts?<br>**Yes**<br>GO to E6.<br>**No**<br>GO to E2. |
| **E2: CHECK THE GROUND CIRCUIT TO THE RH HO2S HEATER FOR OPEN CIRCUIT** | |
| | 1 Turn the ignition switch to the OFF position. |
| | 2 Disconnect the ECM electrical connector PI01. |
| | 3 Measure the resistance between the RH HO2S electrical connector PI10, pin 2 (RU) and the ECM electrical connector PI01, pin 1 and pin 2 (RU). |
| | Is the resistance of each wire less than 5 ohms?<br>**Yes**<br>GO to E3.<br>**No**<br>REPAIR the circuit. For additional information, refer to the wiring diagrams. CLEAR the DTCs. TEST the system for normal operation. |
| **E3: CHECK THE RH HO2S HEATER RESISTANCE** | |
| | 1 Measure the resistance between pins 1 and 2 of the RH H02S. |
| | Is the resistance 3.3 ohms?<br>**Yes**<br>GO to E4.<br>**No**<br>INSTALL a new RH H02S.<br>REFER to: Heated Oxygen Sensor (HO2S) (303-14A Electronic Engine Controls - 2.5L NA V6 - AJV6/3.0L NA V6 - AJ27, Removal and Installation).<br>CLEAR the DTCs. TEST the system for normal operation. |
| **E4: CHECK THE RH HO2S GROUND CIRCUIT FOR SHORT TO GROUND** | |
| | 1 Measure the resistance between the RH HO2S electrical connector PI10, pin 2 (RU) and GROUND. |
| | Is the resistance less than 10,000 ohms?<br>**Yes**<br>REPAIR the short to GROUND. For additional information, refer to the wiring diagrams. CLEAR the DTCs. TEST the system for normal operation.<br>**No**<br>GO to E5. |
| **E5: CHECK THE RH HO2S GROUND CIRCUIT FOR SHORT TO BATTERY** | |
| | 1 Check for a voltage between the RH HO2S electrical connector PI10, pin 2 (RU) and GROUND. |
| | Is the voltage greater than 5 volts?<br>**Yes**<br>REPAIR the short to battery. For additional information, refer to the wiring diagrams. CLEAR the DTCs. TEST the system for normal operation.<br>**No**<br>INSTALL a new RH HO2S.<br>REFER to: Heated Oxygen Sensor (HO2S) (303-14A Electronic Engine Controls - 2.5L NA V6 - AJV6/3.0L NA V6 - AJ27, Removal and Installation).<br>. CLEAR DTCs. TEST the system for normal operation. If the DTC is repeated, INSTALL a new ECM.<br>REFER to: Engine Control Module (ECM) (303-14A Electronic Engine Controls - 2.5L NA V6 - AJV6/3.0L NA V6 - AJ27, Removal and Installation).<br>Before replacing a ECM, contact dealer technical support. |
| **E6: CHECK FUSE 20 OF THE FRONT POWER DISTRIBUTION BOX** | |
| | 1 Check the fuse. |
| | Is the fuse OK?<br>**Yes**<br>GO to E8.<br>**No**<br>GO to E7. |
| **E7: CHECK FUSE 20 OF THE FRONT POWER DISTRIBUTION BOX FOR A SHORT TO GROUND** | |
| | 1 Measure the resistance between electrical connector FH32 pin 26 of the engine compartment fuse box and GROUND. |
| | Is the resistance less than 10,000 ohms?<br>**Yes**<br>REPAIR short to ground between the engine compartment fuse box and the RH bank HO2S. For additional information, refer to the wiring diagrams. CLEAR the DTC. TEST the system for normal operation.<br>**No**<br>INSTALL a new fuse. CLEAR the DTC. TEST the system for normal operation. |
| **E8: CHECK THE POWER SUPPLY TO FUSE 20 OF THE FRONT POWER DISTRIBUTION BOX** | |
| | 1 Turn the ignition switch to the ON position. |
| | 2 Measure the voltage between fuse 20 electrical connector FH32 pin 26 and GROUND. |
| | Is the voltage less than 10 volts?<br>**Yes**<br>Repair the circuit from the ECM control relay to the engine compartment fuse box. For additional information, refer to the wiring diagrams. CLEAR the DTC. TEST the system for normal operation.<br>**No**<br>Repair the circuit between the battery and the EMS relay. Test the relay, renew as necessary. CLEAR the DTC. TEST the system for normal operation. |

## PINPOINT TEST F : DTC P0181, P0182, P0183. FUEL TEMPERATURE SENSOR.

| TEST CONDITIONS | DETAILS/RESULTS/ACTIONS |
|---|---|
| **F1: CHECK THE FUEL TEMPERATURE SENSOR RESISTANCE** | |
| | 1 Disconnect the fuel temperature sensor electrical connector, IL09. |
| | 2 Measure the resistance between pins 1 and 2 of the fuel temperature sensor. |

GETtheMANUALS.org

| | |
|---|---|
| | Is the resistance 37.35 ohms at 20°C?<br>**Yes**<br>GO to F2.<br>**No**<br>INSTALL a new Fuel Temperature Sensor<br>REFER to: Fuel Temperature Sensor (303-14A Electronic Engine Controls - 2.5L NA V6 - AJV6/3.0L NA V6 - AJ27, Removal and Installation).<br>CLEAR the DTCs. TEST the system for normal operation. |
| **F2: CHECK CONTINUITY OF THE FUEL TEMPERATURE SENSOR POWER SUPPLY CIRCUIT** | |
| | 1 Turn the ignition switch to the OFF position. |
| | 2 Disconnect the fuel temperature sensor electrical connector IL09. |
| | 3 Disconnect the ECM electrical connector PI01. |
| | 4 Measure the resistance between the fuel temperature sensor electrical connector IL09, pin 2 (WU) and the ECM electrical connector PI01, pin 50 (WU). |
| | Is the resistance less than 5 ohms?<br>**Yes**<br>GO to F3.<br>**No**<br>REPAIR the circuit. For additional information, refer to the wiring diagrams. CLEAR the DTCs. TEST the system for normal operation. |
| **F3: CHECK THE FUEL TEMPERATURE SENSOR GROUND CIRCUIT** | |
| | 1 Measure the resistance between the fuel temperature sensor electrical connector IL09 pin 1 (BG) and GROUND. |
| | Is the resistance less than 5 ohms?<br>**Yes**<br>GO to F4.<br>**No**<br>REPAIR the circuit. For additional information, refer to the wiring diagrams. CLEAR the DTCs. TEST the system for normal operation. |
| **F4: CHECK THE FUEL TEMPERATURE SENSOR CIRCUIT FOR A SHORT TO GROUND** | |
| | 1 Measure the resistance between the fuel temperature sensor electrical connector IL09 pin 2 (WU) and GROUND. |
| | Is the resistance less than 10,000 ohms?<br>**Yes**<br>REPAIR the short to GROUND. For additional information, refer to the wiring diagrams. CLEAR the DTCs. TEST the system for normal operation.<br>**No**<br>GO to F5. |
| **F5: CHECK THE FUEL TEMPERATURE SENSOR GROUND CIRCUIT FOR A SHORT TO BATTERY** | |
| | 1 Disconnect the fuel temperature sensor electrical connector, IL09. |
| | 2 Turn the ignition switch to the ON position. |
| | 3 Check for a voltage between IL09, pin 1 (BG) and GROUND. |
| | Is a voltage present?<br>**Yes**<br>REPAIR the short to battery. For additional information, refer to the wiring diagrams. CLEAR the DTCs. TEST the system for normal operation.<br>**No**<br>GO to F6. |
| **F6: CHECK THE FUEL TEMPERATURE SENSOR CIRCUIT FOR A SHORT TO BATTERY POSITIVE** | |
| | 1 Connect the ECM electrical connector PI01. |
| | 2 Turn the ignition switch to the ON position. |
| | 3 Measure the voltage between the fuel temperature sensor electrical connector IL09, pin 2 (WU) and GROUND. |
| | Is the voltage greater than 10 volts?<br>**Yes**<br>REPAIR the short to battery positive. For additional information, refer to the wiring diagrams. CLEAR the DTCs. TEST the system for normal operation.<br>**No**<br>INSTALL a new fuel temperature sensor<br>REFER to: Fuel Temperature Sensor (303-14A Electronic Engine Controls - 2.5L NA V6 - AJV6/3.0L NA V6 - AJ27, Removal and Installation).<br>CLEAR the DTCs. TEST the system for normal operation. If the DTC is repeated, INSTALL a new ECM.<br>REFER to: Engine Control Module (ECM) (303-14A Electronic Engine Controls - 2.5L NA V6 - AJV6/3.0L NA V6 - AJ27, Removal and Installation).<br>Before replacing a ECM, contact dealer technical support. |

| **PINPOINT TEST G : DTC P0327, P0328, P1648. KNOCK SENSOR (KS) RIGHT-HAND** | |
|---|---|
| **TEST CONDITIONS** | **DETAILS/RESULTS/ACTIONS** |
| **G1: CHECK THE KS RESISTANCE** | |
| | 1 Disconnect the KS electrical connector, PI20. |
| | 2 Measure the resistance between pins 1 and 2 of the KS. |
| | Is the resistance 180 - 220 Kohms?<br>**Yes**<br>GO to G2.<br>**No**<br>INSTALL a new Knock Sensor<br>REFER to: Knock Sensor (KS) RH (303-14A Electronic Engine Controls - 2.5L NA V6 - AJV6/3.0L NA V6 - AJ27, Removal and Installation). |
| **G2: CHECK THE KS SIGNAL WIRE FOR OPEN CIRCUIT** | |
| | 1 Turn the ignition switch to the OFF position. |
| | 2 Disconnect the KS sensor electrical connector PI20. |
| | 3 Disconnect the ECM electrical connector PI01. |
| | 4 Measure the resistance between PI20, pin 1 (N) and PI01, pin 98 (N). |
| | Is the resistance less than 5 ohms?<br>**Yes**<br>GO to G3.<br>**No**<br>REPAIR the circuit. For additional information, refer to the wiring diagrams. CLEAR the DTCs. TEST the system for normal operation. |

GETtheMANUALS.org

| | |
|---|---|
| **G3: CHECK THE KS SIGNAL WIRE FOR SHORT TO BATTERY** | |
| | 1 Connect the KS sensor electrical connector PI20. |
| | 2 Connect the ECM electrical connector PI01. |
| | 3 Turn the ignition switch to the ON position. |
| | 4 Check for a voltage between PI20, pin 1 (N) and GROUND. |
| | Is a voltage present?<br>**Yes**<br>REPAIR the short to battery. For additional information, refer to the wiring diagrams. CLEAR the DTCs. TEST the system for normal operation.<br>**No**<br>GO to G4. |
| **G4: CHECK THE KS SIGNAL WIRE FOR A SHORT TO GROUND** | |
| | 1 Measure the resistance between the KS sensor electrical connector PI20, pin 1 (N) and GROUND. |
| | Is the resistance less than 10,000 ohms?<br>**Yes**<br>REPAIR the short to GROUND. For additional information, refer to the wiring diagrams. CLEAR the DTCs. TEST the system for normal operation.<br>**No**<br>GO to G5. |
| **G5: CHECK THE KS GROUND LEAD FOR OPEN CIRCUIT** | |
| | 1 Disconnect the KS electrical connector, PI20. |
| | 2 Disconnect the ECM electrical connector, PI01. |
| | 3 Measure the resistance between PI20, pin2 (B) and PI01, pin 100 (BG) |
| | Is the resistance less than 5 ohms?<br>**Yes**<br>GO to G6.<br>**No**<br>REPAIR the circuit between PI20, pin2 (B) and PI01, pin 100 (BG) For additional information, refer to the wiring diagrams. CLEAR the DTCs. TEST the system for normal operation. |
| **G6: CHECK THE KS GROUND LEAD FOR SHORT TO BATTERY** | |
| | 1 Connect the KS sensor electrical connector PI20. |
| | 2 Connect the ECM electrical connector PI01. |
| | 3 Turn the ignition switch to the ON position. |
| | 4 Check for a voltage between PI20, pin 1 (N) and GROUND. |
| | Is a voltage present?<br>**Yes**<br>REPAIR the short to battery. For additional information, refer to the wiring diagrams. CLEAR the DTCs. TEST the system for normal operation.<br>**No**<br>INSTALL a new KS<br>REFER to: Knock Sensor (KS) RH (303-14A Electronic Engine Controls - 2.5L NA V6 - AJV6/3.0L NA V6 - AJ27, Removal and Installation).<br>CLEAR DTCs. TEST the system for normal operation. If the DTC is repeated, INSTALL a new ECM.<br>REFER to: Engine Control Module (ECM) (303-14A Electronic Engine Controls - 2.5L NA V6 - AJV6/3.0L NA V6 - AJ27, Removal and Installation).<br>Before replacing a ECM, contact dealer technical support. |

| **PINPOINT TEST H : DTC P0332, P0333, P1648. KNOCK SENSOR (KS) LEFT-HAND** | |
|---|---|
| **TEST CONDITIONS** | **DETAILS/RESULTS/ACTIONS** |
| **H1: CHECK THE KS RESISTANCE** | |
| | 1 Disconnect the KS electrical connector, PI19. |
| | 2 Measure the resistance between pins 1 and 2 of the KS. |
| | Is the resistance 180 - 220 Kohms?<br>**Yes**<br>GO to H2.<br>**No**<br>INSTALL a new Knock Sensor<br>REFER to: Knock Sensor (KS) LH (303-14A Electronic Engine Controls - 2.5L NA V6 - AJV6/3.0L NA V6 - AJ27, Removal and Installation). |
| **H2: CHECK THE KS SIGNAL WIRE FOR OPEN CIRCUIT** | |
| | 1 Turn the ignition switch to the OFF position. |
| | 2 Disconnect the KS sensor electrical connector PI19. |
| | 3 Disconnect the ECM electrical connector PI01. |
| | 4 Measure the resistance between PI19, pin 1 (N) and PI01, pin 99 (N). |
| | Is the resistance less than 5 ohms?<br>**Yes**<br>GO to H3.<br>**No**<br>REPAIR the circuit. For additional information, refer to the wiring diagrams. CLEAR the DTCs. TEST the system for normal operation. |
| **H3: CHECK THE KS SIGNAL WIRE FOR SHORT TO BATTERY** | |
| | 1 Connect the KS sensor electrical connector PI19. |
| | 2 Connect the ECM electrical connector PI01. |
| | 3 Turn the ignition switch to the ON position. |
| | 4 Check for a voltage between PI19, pin 1 (N) and GROUND. |
| | Is a voltage present?<br>**Yes**<br>REPAIR the short to battery. For additional information, refer to the wiring diagrams. CLEAR the DTCs. TEST the system for normal operation.<br>**No**<br>GO to H4. |
| **H4: CHECK THE KS SIGNAL WIRE FOR A SHORT TO GROUND** | |
| | 1 Measure the resistance between the KS sensor electrical connector PI19, pin 1 (N) and GROUND. |

GETfreeMANUALS.org

| | |
|---|---|
| | Is the resistance less than 10,000 ohms?<br>**Yes**<br>REPAIR the short to GROUND. For additional information, refer to the wiring diagrams. CLEAR the DTCs. TEST the system for normal operation.<br>**No**<br>GO to H5. |
| **H5: CHECK THE KS GROUND LEAD FOR OPEN CIRCUIT** | |
| | 1 Disconnect the KS electrical connector, PI19. |
| | 2 Disconnect the ECM electrical connector, PI01. |
| | 3 Measure the resistance between PI19, pin2 (B) and PI01, pin 100 (BG) |
| | Is the resistance less than 5 ohms?<br>**Yes**<br>GO to H6.<br>**No**<br>REPAIR the circuit between PI19, pin2 (B) and PI01, pin 100 (BG) For additional information, refer to the wiring diagrams. CLEAR the DTCs. TEST the system for normal operation. |
| **H6: CHECK THE KS GROUND LEAD FOR SHORT TO BATTERY** | |
| | 1 Connect the KS sensor electrical connector PI19. |
| | 2 Connect the ECM electrical connector PI01. |
| | 3 Turn the ignition switch to the ON position. |
| | 4 Check for a voltage between PI19, pin 1 (N) and GROUND. |
| | Is a voltage present?<br>**Yes**<br>REPAIR the short to battery. For additional information, refer to the wiring diagrams. CLEAR the DTCs. TEST the system for normal operation.<br>**No**<br>INSTALL a new KS<br>REFER to: Knock Sensor (KS) LH (303-14A Electronic Engine Controls - 2.5L NA V6 - AJV6/3.0L NA V6 - AJ27, Removal and Installation).<br>CLEAR DTCs. TEST the system for normal operation. If the DTC is repeated, INSTALL a new ECM.<br>REFER to: Engine Control Module (ECM) (303-14A Electronic Engine Controls - 2.5L NA V6 - AJV6/3.0L NA V6 - AJ27, Removal and Installation).<br>Before replacing a ECM, contact dealer technical support. |

| **PINPOINT TEST I : DTC P0196, P0197, P0198. OIL TEMPERATURE SENSOR.** | |
|---|---|
| **TEST CONDITIONS** | **DETAILS/RESULTS/ACTIONS** |
| **I1: CHECK THE OIL TEMPERATURE SENSOR SIGNAL WIRE FOR OPEN CIRCUIT** | |
| | 1 Turn the ignition switch to the OFF position. |
| | 2 Disconnect the oil temperature sensor electrical connector PI24. |
| | 3 Disconnect the ECM electrical connector PI01. |
| | 4 Measure the resistance between the oil temperature sensor electrical connector PI24, pin 1 (Y) and the ECM electrical connector PI01, pin 78 (Y). |
| | Is the resistance less than 5 ohms?<br>**Yes**<br>GO to I2.<br>**No**<br>REPAIR the circuit. For additional information, refer to the wiring diagrams. CLEAR the DTCs. TEST the system for normal operation. |
| **I2: CHECK THE OIL TEMPERATURE SENSOR GROUND CIRCUIT FOR OPEN CIRCUIT** | |
| | 1 Measure the resistance between the oil temperature sensor electrical connector PI24, pin 2 (BG) and GROUND. |
| | Is the resistance less than 5 ohms?<br>**Yes**<br>GO to I3.<br>**No**<br>REPAIR the circuit. For additional information, refer to the wiring diagrams. CLEAR the DTCs. TEST the system for normal operation. |
| **I3: CHECK THE OIL TEMPERATURE SENSOR GROUND CIRCUIT FOR SHORT TO BATTERY** | |
| | 1 Connect ECM electrical connector, PI01 |
| | 2 Turn the ignition switch to the RUN position. |
| | 3 Measure the voltage between the oil temperature sensor electrical connector PI24, pin 2 (BG) and GROUND. |
| | Is a voltage present?<br>**Yes**<br>REPAIR the short circuit. For additional information, refer to the wiring diagrams. CLEAR the DTCs. TEST the system for normal operation.<br>**No**<br>GO to I4. |
| **I4: CHECK THE OIL TEMPERATURE SENSOR CIRCUIT FOR A SHORT TO GROUND** | |
| | 1 Measure the resistance between the oil temperature sensor electrical connector PI24, pin 1 (Y) and GROUND. |
| | Is the resistance less than 10,000 ohms?<br>**Yes**<br>REPAIR the short to GROUND. For additional information, refer to the wiring diagrams. CLEAR the DTCs. TEST the system for normal operation.<br>**No**<br>GO to I5. |
| **I5: CHECK THE OIL TEMPERATURE SENSOR CIRCUIT FOR A SHORT TO BATTERY POSITIVE** | |
| | 1 Connect ECM electrical connector, PI01 |
| | 2 Turn the ignition switch to the ON position. |
| | 3 Measure the voltage between the oil temperature sensor electrical connector PI24, pin 1 (Y) and GROUND. |
| | Is the voltage greater than 10 volts?<br>**Yes**<br>REPAIR the short to battery positive. For additional information, refer to the wiring diagrams. CLEAR the DTCs. TEST the system for normal operation.<br>**No**<br>INSTALL a new oil temperature sensor.<br>REFER to: Oil Temperature Sensor (303-14A Electronic Engine Controls - 2.5L NA V6 - AJV6/3.0L NA V6 - AJ27, Removal and Installation). |

GETtheMANUALS.org

| | |
|---|---|
| | CLEAR DTCs. TEST the system for normal operation. If the DTC is repeated, INSTALL a new ECM.<br>REFER to: Engine Control Module (ECM) (303-14A Electronic Engine Controls - 2.5L NA V6 - AJV6/3.0L NA V6 - AJ27, Removal and Installation).<br>Before replacing a ECM, contact dealer technical support. |

| PINPOINT TEST J : DTC P0131, P0132, P0133, P1646. RH HO2S. | |
|---|---|
| **TEST CONDITIONS** | **DETAILS/RESULTS/ACTIONS** |
| **J1: CHECK THE CONSTANT CIRCUIT OF THE RH HO2S FOR OPEN CIRCUIT** | |
| | 1 Disconnect the RH HO2S electrical connector PI10. |
| | 2 Disconnect the ECM electrical connector, PI01. |
| | 3 Measure the resistance between PI01, pin 84 (Y) and PI10, pin 4 (Y) |
| | Is the resistance less than 5 ohms?<br>**Yes**<br>GO to J2.<br>**No**<br>REPAIR the circuit. For additional information, refer to the wiring diagrams. CLEAR the DTCs. TEST the system for normal operation. |
| **J2: CHECK THE CONSTANT CIRCUIT OF THE RH HO2S FOR SHORT TO GROUND** | |
| | 1 Measure the resistance between PI10, pin 4 (Y) and GROUND. |
| | Is the resistance less than 10,000 ohms?<br>**Yes**<br>REPAIR the short circuit. For additional information, refer to the wiring diagrams. CLEAR the DTCs. TEST the system for normal operation.<br>**No**<br>GO to J3. |
| **J3: CHECK THE CONSTANT CIRCUIT OF THE RH HO2S FOR SHORT TO BATTERY** | |
| | 1 Connect the ECM electrical connector PI01. |
| | 2 Turn the ignition switch to the ON position. |
| | 3 Measure the voltage between PI10, pin 4 (Y) and GROUND. |
| | Is the voltage greater than 5 volts?<br>**Yes**<br>REPAIR the short circuit. For additional information, refer to the wiring diagrams. CLEAR the DTCs. TEST the system for normal operation.<br>**No**<br>GO to J4. |
| **J4: CHECK THE VARIABLE CIRCUIT OF THE RH HO2S FOR OPEN CIRCUIT** | |
| | 1 Disconnect the RH HO2S electrical connector PI10. |
| | 2 Disconnect the ECM electrical connector, PI01. |
| | 3 Measure the resistance between PI01, pin 83 (R) and PI10, pin 3 (R) |
| | Is the resistance less than 5 ohms?<br>**Yes**<br>GO to J5.<br>**No**<br>REPAIR the circuit. For additional information, refer to the wiring diagrams. CLEAR the DTCs. TEST the system for normal operation. |
| **J5: CHECK THE VARIABLE CIRCUIT OF THE RH HO2S FOR SHORT TO GROUND** | |
| | 1 Measure the resistance between PI01, pin 83 (R) and GROUND. |
| | Is the resistance less than 10,000 ohms?<br>**Yes**<br>REPAIR the short circuit. For additional information, refer to the wiring diagrams. CLEAR the DTCs. TEST the system for normal operation.<br>**No**<br>GO to J6. |
| **J6: CHECK THE VARIABLE CIRCUIT OF THE RH HO2S FOR SHORT TO BATTERY** | |
| | 1 Connect the ECM electrical connector PI01. |
| | 2 Turn the ignition switch to the ON position. |
| | 3 Measure the voltage between PI10, pin 3 (R) and GROUND. |
| | Is the voltage greater than 1 volt?<br>**Yes**<br>REPAIR the short circuit. For additional information, refer to the wiring diagrams. CLEAR the DTCs. TEST the system for normal operation.<br>**No**<br>INSTALL a new RH HO2S<br>REFER to: Heated Oxygen Sensor (HO2S) (303-14A Electronic Engine Controls - 2.5L NA V6 - AJV6/3.0L NA V6 - AJ27, Removal and Installation).<br>CLEAR the DTCs. TEST the system for normal operation. If the DTC is repeated, INSTALL a new ECM.<br>REFER to: Engine Control Module (ECM) (303-14A Electronic Engine Controls - 2.5L NA V6 - AJV6/3.0L NA V6 - AJ27, Removal and Installation).<br>Before replacing a ECM, contact dealer technical support. |

| PINPOINT TEST K : DTC P0037, P0038, P0137, P0138, P0140. RH CATALYST MONITOR. | |
|---|---|
| **TEST CONDITIONS** | **DETAILS/RESULTS/ACTIONS** |
| **K1: CHECK THE POWER SUPPLY CIRCUIT TO THE RH CATALYST MONITOR HEATER** | |
| | 1 Turn the ignition switch to the OFF position. |
| | 2 Disconnect the RH catalyst monitor sensor electrical connector PI11. |
| | 3 Turn the ignition switch to the ON position. |
| | 4 Measure the voltage between PI11, pin 1 (WG) and GROUND. |
| | Is the voltage less than 10 volts?<br>**Yes**<br>REPAIR the circuit. For additional information, refer to the wiring diagrams. CLEAR the DTCs. TEST the system for normal operation.<br>(This circuit includes the power distribution fuse box and EMS control relay.)<br>**No**<br>GO to K2. |

GETtheMANUALS.org

| | |
|---|---|
| **K2: CHECK THE GROUND SUPPLY CIRCUIT TO THE RH CATALYST MONITOR HEATER FOR CONTINUITY** | |
| | 1 Turn the ignition switch to the OFF position. |
| | 2 Disconnect the ECM electrical connector PI01. |
| | 3 Measure the resistance between PI11, pin 2 (UY) and PI01, pin 92 (UY) |
| | Is the resistance less than 5 ohms?<br>**Yes**<br>GO to K3.<br>**No**<br>REPAIR the circuit. For additional information, refer to the wiring diagrams. CLEAR the DTCs. TEST the system for normal operation. |
| **K3: CHECK THE RH CATALYST MONITOR HEATER RESISTANCE** | |
| | 1 Measure the resistance between pins 1 and 2 of the RH Catalyst Monitor heater. |
| | Is the resistance 5.0 ohms?<br>**Yes**<br>GO to K4.<br>**No**<br>INSTALL a new RH Catalyst Monitor Sensor<br>REFER to: Catalyst Monitor Sensor (303-14A Electronic Engine Controls - 2.5L NA V6 - AJV6/3.0L NA V6 - AJ27, Removal and Installation).<br>CLEAR the DTCs. TEST the system for normal operation. |
| **K4: CHECK THE GROUND SUPPLY CIRCUIT TO THE RH CATALYST MONITOR HEATER FOR SHORT TO GROUND** | |
| | 1 Measure the resistance between PI11, pin 2 (UY) and GROUND. |
| | Is the resistance less than 10,000 ohms?<br>**Yes**<br>REPAIR the short circuit. For additional information, refer to the wiring diagrams. CLEAR the DTCs. TEST the system for normal operation.<br>**No**<br>GO to K5. |
| **K5: CHECK THE GROUND SUPPLY CIRCUIT TO THE RH CATALYST MONITOR HEATER FOR SHORT TO BATTERY** | |
| | 1 Connect the ECM electrical connector, PI01. |
| | 2 Turn the ignition switch to the ON position. |
| | 3 Check for a voltage at PI11, pin 2 (UY) |
| | Is the voltage greater than 5 volts?<br>**Yes**<br>REPAIR the short circuit. For additional information, refer to the wiring diagrams. CLEAR the DTCs. TEST the system for normal operation.<br>**No**<br>GO to K6. |
| **K6: CHECK THE CONSTANT CIRCUIT OF THE RH CATALYST MONITOR SENSOR FOR OPEN CIRCUIT** | |
| | 1 Disconnect the RH catalyst monitor sensor electrical connector, PI11. |
| | 2 Disconnect the ECM electrical connector, PI01. |
| | 3 Measure the resistance between PI11, pin 3 (B) and PI01, pin 130 (BW) |
| | Is the resistance less than 5 ohms?<br>**Yes**<br>GO to K7.<br>**No**<br>REPAIR the circuit. For additional information, refer to the wiring diagrams. CLEAR the DTCs. TEST the system for normal operation. |
| **K7: CHECK THE CONSTANT CIRCUIT OF THE RH CATALYST MONITOR SENSOR FOR SHORT TO GROUND** | |
| | 1 Measure the resistance between PI01, pin 130 (BW) and GROUND. |
| | Is the resistance less than 10,000 ohms?<br>**Yes**<br>REPAIR the short circuit. For additional information, refer to the wiring diagrams. CLEAR the DTCs. TEST the system for normal operation.<br>**No**<br>GO to K8. |
| **K8: CHECK THE CONSTANT CIRCUIT OF THE RH CATALYST MONITOR SENSOR FOR SHORT TO BATTERY** | |
| | 1 Connect the ECM electrical connector, PI01. |
| | 2 Turn the ignition switch to the ON position. |
| | 3 Measure the voltage between PI11, pin 3 (B) and GROUND. |
| | Is the voltage greater than 5 volts?<br>**Yes**<br>REPAIR the short circuit. For additional information, refer to the wiring diagrams. CLEAR the DTCs. TEST the system for normal operation.<br>**No**<br>GO to K9. |
| **K9: CHECK THE VARIABLE CIRCUIT OF THE RH CATALYST MONITOR SENSOR FOR OPEN CIRCUIT** | |
| | 1 Disconnect the RH catalyst monitor sensor electrical connector PI11. |
| | 2 Disconnect the ECM electrical connector, PI01. |
| | 3 Measure the resistance between PI01, pin 128 (N) and PI11, pin 4 (N) |
| | Is the resistance less than 5 ohms?<br>**Yes**<br>GO to K10.<br>**No**<br>REPAIR the circuit. For additional information, refer to the wiring diagrams. CLEAR the DTCs. TEST the system for normal operation. |
| **K10: CHECK THE VARIABLE CIRCUIT OF THE RH CATALYST MONITOR SENSOR FOR SHORT TO GROUND** | |
| | 1 Measure the resistance between PI11, pin 4 (N) and GROUND. |
| | Is the resistance less than 10,000 ohms?<br>**Yes**<br>REPAIR the short circuit. For additional information, refer to the wiring diagrams. CLEAR the DTCs. TEST the system for normal operation.<br>**No**<br>GO to K11. |
| **K11: CHECK THE VARIABLE CIRCUIT OF THE RH CATALYST MONITOR SENSOR FOR SHORT TO BATTERY** | |
| | 1 Connect the ECM electrical connector PI01. |

GETtheMANUALS.com

| | |
|---|---|
| | 2 Turn the ignition switch to the ON position. |
| | 3 Measure the voltage between PI11, pin 4 (N) and GROUND. |
| | Is the voltage greater than 5 volts?<br>**Yes**<br>REPAIR the short circuit. For additional information, refer to the wiring diagrams. CLEAR the DTCs. TEST the system for normal operation.<br>**No**<br>INSTALL a new RH Catalyst monitor sensor<br>REFER to: Catalyst Monitor Sensor (303-14A Electronic Engine Controls - 2.5L NA V6 - AJV6/3.0L NA V6 - AJ27, Removal and Installation).<br>CLEAR the DTCs. TEST the system for normal operation. If the DTC is repeated, INSTALL a new ECM.<br>REFER to: Engine Control Module (ECM) (303-14A Electronic Engine Controls - 2.5L NA V6 - AJV6/3.0L NA V6 - AJ27, Removal and Installation).<br>Before replacing a ECM, contact dealer technical support. |

| **PINPOINT TEST L : DTC P0051, P0052, P0151, P0152, P0153, P1647. LH HO2S.** | |
|---|---|
| **TEST CONDITIONS** | **DETAILS/RESULTS/ACTIONS** |
| **L1: CHECK THE CONSTANT CIRCUIT OF THE LH HO2S FOR OPEN CIRCUIT** | |
| | 1 Disconnect the LH HO2S electrical connector PI12. |
| | 2 Disconnect the ECM electrical connector, PI01. |
| | 3 Measure the resistance between PI01, pin 108 (N) and PI12, pin 4 (N) |
| | Is the resistance less than 5 ohms?<br>**Yes**<br>GO to L2.<br>**No**<br>REPAIR the circuit. For additional information, refer to the wiring diagrams. CLEAR the DTCs. TEST the system for normal operation. |
| **L2: CHECK THE CONSTANT CIRCUIT OF THE LH HO2S FOR SHORT TO GROUND** | |
| | 1 Measure the resistance between PI01, pin 108 (N) and GROUND. |
| | Is the resistance less than 10,000 ohms?<br>**Yes**<br>REPAIR the short circuit. For additional information, refer to the wiring diagrams. CLEAR the DTCs. TEST the system for normal operation.<br>**No**<br>GO to L3. |
| **L3: CHECK THE CONSTANT CIRCUIT OF THE LH HO2S FOR SHORT TO BATTERY** | |
| | 1 Connect the ECM electrical connector PI01. |
| | 2 Turn the ignition switch to the ON position. |
| | 3 Measure the voltage between PI12, pin 4 (N) and GROUND. |
| | Is the voltage greater than 5 volts?<br>**Yes**<br>REPAIR the short circuit. For additional information, refer to the wiring diagrams. CLEAR the DTCs. TEST the system for normal operation.<br>**No**<br>GO to L4. |
| **L4: CHECK THE VARIABLE CIRCUIT OF THE LH HO2S FOR OPEN CIRCUIT** | |
| | 1 Disconnect the LH HO2S electrical connector, PI12. |
| | 2 Disconnect the ECM electrical connector, PI01. |
| | 3 Measure the resistance between PI01, pin 107 (G) and PI12, pin 3 (G) |
| | Is the resistance less than 5 ohms?<br>**Yes**<br>GO to L5.<br>**No**<br>REPAIR the circuit. For additional information, refer to the wiring diagrams. CLEAR the DTCs. TEST the system for normal operation. |
| **L5: CHECK THE VARIABLE CIRCUIT OF THE LH HO2S FOR SHORT TO GROUND** | |
| | 1 Measure the resistance between PI01, pin 107 (G) and GROUND. |
| | Is the resistance less than 10,000 ohms?<br>**Yes**<br>REPAIR the short circuit. For additional information, refer to the wiring diagrams. CLEAR the DTCs. TEST the system for normal operation.<br>**No**<br>GO to L6. |
| **L6: CHECK THE VARIABLE CIRCUIT OF THE LH HO2S FOR SHORT TO BATTERY** | |
| | 1 Connect the ECM electrical connector PI01. |
| | 2 Turn the ignition switch to the ON position. |
| | 3 Measure the voltage between PI12, pin 3 (G) and GROUND. |
| | Is the voltage greater than 5 volts?<br>**Yes**<br>REPAIR the short circuit. For additional information, refer to the wiring diagrams. CLEAR the DTCs. TEST the system for normal operation.<br>**No**<br>INSTALL a new LH HO2S<br>REFER to: Heated Oxygen Sensor (HO2S) (303-14A Electronic Engine Controls - 2.5L NA V6 - AJV6/3.0L NA V6 - AJ27, Removal and Installation).<br>CLEAR the DTCs. TEST the system for normal operation. If the DTC is repeated, INSTALL a new ECM.<br>REFER to: Engine Control Module (ECM) (303-14A Electronic Engine Controls - 2.5L NA V6 - AJV6/3.0L NA V6 - AJ27, Removal and Installation).<br>Before replacing a ECM, contact dealer technical support. |

| **PINPOINT TEST M : DTC P0057, P0058, P0157, P0158, P0160. LH CATALYST MONITOR.** | |
|---|---|
| **TEST CONDITIONS** | **DETAILS/RESULTS/ACTIONS** |
| **M1: CHECK THE POWER SUPPLY CIRCUIT TO THE LH CATALYST MONITOR HEATER** | |
| | 1 Turn the ignition switch to the OFF position. |

GETtheMANUALS.org

| | |
|---|---|
| | 2 Disconnect the LH catalyst monitor sensor electrical connector PI13. |
| | 3 Turn the ignition switch to the ON position. |
| | 4 Measure the voltage between PI13, pin 1 (WR) and GROUND. |
| | Is the voltage less than 10 volts?<br>**Yes**<br>REPAIR the circuit. For additional information, refer to the wiring diagrams. CLEAR the DTCs. TEST the system for normal operation.<br>**No**<br>GO to M2. |
| **M2: CHECK THE GROUND SUPPLY CIRCUIT TO THE LH CATALYST MONITOR HEATER FOR CONTINUITY** | |
| | 1 Turn the ignition switch to the OFF position. |
| | 2 Disconnect the ECM electrical connector PI01. |
| | 3 Measure the resistance between PI13, pin 2 (RW) and PI01, pin 93 (RW) |
| | Is the resistance less than 5 ohms?<br>**Yes**<br>GO to M4.<br>**No**<br>REPAIR the circuit. For additional information, refer to the wiring diagrams. CLEAR the DTCs. TEST the system for normal operation. |
| **M3: CHECK THE LH CATALYST MONITOR HEATER RESISTANCE** | |
| | 1 Measure the resistance between pins 1 and 2 of the LH Catalyst Monitor heater. |
| | Is the resistance 5.0 ohms?<br>**Yes**<br>GO to P4.<br>**No**<br>INSTALL a new LH Catalyst Monitor Sensor<br>REFER to: Catalyst Monitor Sensor (303-14A Electronic Engine Controls - 2.5L NA V6 - AJV6/3.0L NA V6 - AJ27, Removal and Installation).<br>CLEAR the DTCs. TEST the system for normal operation. |
| **M4: CHECK THE GROUND SUPPLY CIRCUIT TO THE LH CATALYST MONITOR HEATER FOR SHORT TO GROUND** | |
| | 1 Measure the resistance between PI13, pin 2 (RW) and GROUND. |
| | Is the resistance less than 10,000 ohms?<br>**Yes**<br>REPAIR the short circuit. For additional information, refer to the wiring diagrams. CLEAR the DTCs. TEST the system for normal operation.<br>**No**<br>GO to M5. |
| **M5: CHECK THE GROUND SUPPLY CIRCUIT TO THE LH CATALYST MONITOR HEATER FOR SHORT TO BATTERY** | |
| | 1 Connect the ECM electrical connector, PI01. |
| | 2 Turn the ignition switch to the ON position. |
| | 3 Check for a voltage at PI13, pin2 (RW) |
| | Is the voltage greater than 5 volts?<br>**Yes**<br>REPAIR the short circuit. For additional information, refer to the wiring diagrams. CLEAR the DTCs. TEST the system for normal operation.<br>**No**<br>GO to M6. |
| **M6: CHECK THE CONSTANT CIRCUIT OF THE LH CATALYST MONITOR SENSOR FOR OPEN CIRCUIT** | |
| | 1 Disconnect the LH catalyst monitor sensor electrical connector, PI13. |
| | 2 Disconnect the ECM electrical connector, PI01. |
| | 3 Measure the resistance between PI13, pin 3 (B) and PI01, pin 130 (BW) |
| | Is the resistance less than 5 ohms?<br>**Yes**<br>GO to M7.<br>**No**<br>REPAIR the circuit. For additional information, refer to the wiring diagrams. CLEAR the DTCs. TEST the system for normal operation. |
| **M7: CHECK THE CONSTANT CIRCUIT OF THE LH CATALYST MONITOR SENSOR FOR SHORT TO GROUND** | |
| | 1 Measure the resistance between PI01, pin 130 (BW) and GROUND. |
| | Is the resistance less than 10,000 ohms?<br>**Yes**<br>REPAIR the short circuit. For additional information, refer to the wiring diagrams. CLEAR the DTCs. TEST the system for normal operation.<br>**No**<br>GO to M8. |
| **M8: CHECK THE CONSTANT CIRCUIT OF THE LH CATALYST MONITOR SENSOR FOR SHORT TO BATTERY** | |
| | 1 Connect the ECM electrical connector, PI01. |
| | 2 Turn the ignition switch to the ON position. |
| | 3 Measure the voltage between PI13, pin 3 (B) and GROUND. |
| | Is the voltage greater than 5 volts?<br>**Yes**<br>REPAIR the short circuit. For additional information, refer to the wiring diagrams. CLEAR the DTCs. TEST the system for normal operation.<br>**No**<br>GO to M9. |
| **M9: CHECK THE VARIABLE CIRCUIT OF THE LH CATALYST MONITOR SENSOR FOR OPEN CIRCUIT** | |
| | 1 Disconnect the LH catalyst monitor sensor electrical connector PI13. |
| | 2 Disconnect the ECM electrical connector, PI01. |
| | 3 Measure the resistance between PI01, pin 129 (N) and PI13, pin 4 (N) |
| | Is the resistance less than 5 ohms?<br>**Yes**<br>GO to M10.<br>**No**<br>REPAIR the circuit. For additional information, refer to the wiring diagrams. CLEAR the DTCs. TEST the system for normal operation. |
| **M10: CHECK THE VARIABLE CIRCUIT OF THE LH CATALYST MONITOR SENSOR FOR SHORT TO GROUND** | |

GETtheMANUALS.org

| | |
|---|---|
| | 1 Measure the resistance between PI13, pin 4 (N) and GROUND. |
| | Is the resistance less than 10,000 ohms?<br>**Yes**<br>REPAIR the short circuit. For additional information, refer to the wiring diagrams. CLEAR the DTCs. TEST the system for normal operation.<br>**No**<br>GO to M11. |
| **M11: CHECK THE VARIABLE CIRCUIT OF THE LH CATALYST MONITOR SENSOR FOR SHORT TO BATTERY** | |
| | 1 Connect the ECM electrical connector PI01. |
| | 2 Turn the ignition switch to the ON position. |
| | 3 Measure the voltage between PI13, pin 4 (N) and GROUND. |
| | Is the voltage greater than 5 volts?<br>**Yes**<br>REPAIR the short circuit. For additional information, refer to the wiring diagrams. CLEAR the DTCs. TEST the system for normal operation.<br>**No**<br>INSTALL a new LH Catalyst monitor sensor<br>REFER to: Catalyst Monitor Sensor (303-14A Electronic Engine Controls - 2.5L NA V6 - AJV6/3.0L NA V6 - AJ27, Removal and Installation).<br>CLEAR the DTCs. TEST the system for normal operation. If the DTC is repeated, INSTALL a new ECM. Before replacing a ECM, contact dealer technical support. |

| **PINPOINT TEST N : DTC P0101, P0102, P0103, P1104. MAF SENSOR.** | |
|---|---|
| **TEST CONDITIONS** | **DETAILS/RESULTS/ACTIONS** |
| **N1: CHECK THE MASS AIR FLOW (MAF) SENSOR POWER SUPPLY** | |
| | 1 Turn the ignition switch to the OFF position. |
| | 2 Disconnect the MAF sensor electrical connector PI14. |
| | 3 Turn the ignition switch to the ON position. |
| | 4 Measure the voltage between PI14, pin 1 (GU) and GROUND. |
| | Is the voltage less than 10 volts?<br>**Yes**<br>REPAIR the circuit. For additional information, refer to wiring diagrams. CLEAR the DTC. TEST the system for normal operation.<br>(This circuit includes the power distribution fuse box and the EMS relay.)<br>**No**<br>GO to N2. |
| **N2: CHECK THE MAF SENSOR GROUND CIRCUIT** | |
| | 1 Turn the ignition switch to the ON position. |
| | 2 Measure the resistance between PI14 pin 2 (BK) and GROUND. |
| | Is the resistance less than 5 ohms?<br>**Yes**<br>GO to N3.<br>**No**<br>REPAIR the circuit. For additional information, refer to the wiring diagrams. CLEAR the DTCs. TEST the system for normal operation.<br>(This circuit includes the ECM. For additional information, refer to Dealer Technical Support.) |
| **N3: CHECK THE MAF SENSOR SIGNAL CIRCUIT FOR OPEN CIRCUIT** | |
| | 1 Disconnect the ECM electrical connector, PI01. |
| | 2 Measure the resistance between PI01, pin 44 (GW) and PI14, pin 3, (GW) |
| | Is the resistance less than 5 ohms?<br>**Yes**<br>GO to N4.<br>**No**<br>REPAIR the circuit. For additional information, refer to the wiring diagrams. CLEAR the DTCs. TEST the system for normal operation. |
| **N4: CHECK THE MAF SENSOR CIRCUIT FOR SHORT TO GROUND** | |
| | 1 Connect the ECM electrical connector, PI01. |
| | 2 Measure the resistance between PI14 pin 3 (GW) and GROUND. |
| | Is the resistance less than 10,000 ohms?<br>**Yes**<br>REPAIR the short to GROUND. For additional information, refer to wiring diagrams. CLEAR the DTC. TEST the system for normal operation.<br>**No**<br>INSTALL a new MAF sensor<br>REFER to: Mass Air Flow (MAF) Sensor (303-14A Electronic Engine Controls - 2.5L NA V6 - AJV6/3.0L NA V6 - AJ27, Removal and Installation).<br>CLEAR the DTC. TEST the system for normal operation. If the DTC is repeated, INSTALL a new ECM.<br>REFER to: Engine Control Module (ECM) (303-14A Electronic Engine Controls - 2.5L NA V6 - AJV6/3.0L NA V6 - AJ27, Removal and Installation).<br>Before replacing a ECM, contact dealer technical support. |

| **PINPOINT TEST O : P0111, P0112, P0113. IAT SENSOR.** | |
|---|---|
| **TEST CONDITIONS** | **DETAILS/RESULTS/ACTIONS** |
| **O1: CHECK THE INTAKE AIR TEMPERATURE (IAT) SENSOR RESISTANCE** | |
| | 1 Turn the ignition switch to the OFF position. |
| | 2 Disconnect the MAF sensor electrical connector PI14. |
| | 3 Measure the resistance between pins 4 and 5 of the MAF sensor. |
| | Is the resistance 2450 ohms at 20°C?<br>**Yes**<br>GO to O2.<br>**No**<br>INSTALL a new MAF sensor<br>REFER to: Mass Air Flow (MAF) Sensor (303-14A Electronic Engine Controls - 2.5L NA V6 - AJV6/3.0L NA V6 - AJ27, Removal and Installation). |

GETtheMANUALS.org

| | |
|---|---|
| | CLEAR the DTC. TEST the system for normal operation. |
| **O2: CHECK CONTINUITY OF THE INTAKE AIR TEMPERATURE (IAT) SENSOR POWER SUPPLY CIRCUIT** | |
| | 1 Turn the ignition switch to the OFF position. |
| | 2 Disconnect the MAF sensor electrical connector PI14. |
| | 3 Disconnect the ECM electrical connector PI01. |
| | 4 Measure the resistance between the MAF sensor electrical connector PI14, pin 4 (U) and the ECM electrical connector PI01, pin 71 (U). |
| | Is the resistance less than 5 ohms?<br>**Yes**<br>GO to O3.<br>**No**<br>REPAIR the circuit. For additional information, refer to the wiring diagrams. CLEAR the DTCs. TEST the system for normal operation. |
| **O3: CHECK CONTINUITY OF THE IAT SENSOR CIRCUIT** | |
| | 1 Measure the resistance between the MAF sensor electrical connector PI14, pin 5 (BG) and the ECM electrical connector PI01, pin 19 (BG). |
| | Is the resistance less than 5 ohms?<br>**Yes**<br>GO to O4.<br>**No**<br>REPAIR the circuit. For additional information, refer to the wiring diagrams. CLEAR the DTCs. TEST the system for normal operation. |
| **O4: CHECK THE IAT SENSOR POWER SUPPLY CIRCUIT FOR SHORT TO GROUND** | |
| | 1 Measure the resistance between the MAF sensor electrical connector PI14, pin 4 (U) and GROUND. |
| | Is the resistance less than 10,000 ohms?<br>**Yes**<br>REPAIR the short to GROUND. For additional information, refer to the wiring diagrams. CLEAR the DTCs. TEST the system for normal operation.<br>**No**<br>GO to O5. |
| **O5: CHECK THE IAT SENSOR GROUND CIRCUIT FOR SHORT TO BATTERY** | |
| | 1 Connect the ECM electrical connector, PI01. |
| | 2 Turn the ignition switch to the ON position. |
| | 3 Check for voltage at PI14, pin 5 (BG) |
| | Is the voltage greater than 5 volts?<br>**Yes**<br>REPAIR the short circuit. For additional information, refer to the wiring diagrams. CLEAR the DTCs. TEST the system for normal operation.<br>**No**<br>INSTALL a new MAF sensor<br>REFER to: Mass Air Flow (MAF) Sensor (303-14A Electronic Engine Controls - 2.5L NA V6 - AJV6/3.0L NA V6 - AJ27, Removal and Installation).<br>CLEAR DTCs. TEST the system for normal operation. If the DTC is repeated, INSTALL a new ECM.<br>REFER to: Engine Control Module (ECM) (303-14A Electronic Engine Controls - 2.5L NA V6 - AJV6/3.0L NA V6 - AJ27, Removal and Installation).<br>Before replacing a ECM, contact dealer technical support. |

| **PINPOINT TEST P : DTC P0051, P0052. LH HO2S HEATER.** | |
|---|---|
| **TEST CONDITIONS** | **DETAILS/RESULTS/ACTIONS** |
| **P1: CHECK THE POWER SUPPLY CIRCUIT TO THE LH HO2S HEATER** | |
| | 1 Disconnect the HO2S electrical connector, PI12. |
| | 2 Turn the ignition switch to the ON position. |
| | 3 Measure the voltage between PI12, pin 1 (WR) and GROUND. |
| | Is the voltage less than 10 volts?<br>**Yes**<br>GO to P6.<br>(This circuit includes the power distribution fuse box and the EMS relay.)<br>**No**<br>GO to P2. |
| **P2: CHECK THE LH HO2S HEATER GROUND CIRCUIT FOR OPEN CIRCUIT** | |
| | 1 Turn the ignition switch to the OFF position. |
| | 2 Disconnect the ECM electrical connector PI01. |
| | 3 Measure the resistance between the LH bank HO2S electrical connector PI12, pin 2 (RW) and the ECM electrical connector PI01, pins 55 and pin 56 (RW). |
| | Is the resistance of each wire less than 5 ohms?<br>**Yes**<br>GO to P3.<br>**No**<br>REPAIR the circuit. For additional information, refer to the wiring diagrams. CLEAR the DTCs. TEST the system for normal operation. |
| **P3: CHECK THE LH HO2S HEATER RESISTANCE** | |
| | 1 Measure the resistance between pins 1 and 2 of the LH H02S. |
| | Is the resistance 3.3 ohms?<br>**Yes**<br>GO to P4.<br>**No**<br>INSTALL a new LH H02S<br>REFER to: Heated Oxygen Sensor (HO2S) (303-14A Electronic Engine Controls - 2.5L NA V6 - AJV6/3.0L NA V6 - AJ27, Removal and Installation).<br>CLEAR the DTCs. TEST the system for normal operation. |
| **P4: CHECK THE LH HO2S HEATER CIRCUIT FOR SHORT TO GROUND** | |
| | 1 Measure the resistance between the LH bank HO2S electrical connector PI12, pin 2 (RW) and GROUND. |

GETtheMANUALS.org

| | |
|---|---|
| | Is the resistance less than 10,000 ohms?<br>**Yes**<br>REPAIR the short to GROUND. For additional information, refer to the wiring diagrams. CLEAR the DTCs. TEST the system for normal operation.<br>**No**<br>GO to P5. |
| **P5: CHECK THE LH HO2S HEATER CIRCUIT FOR SHORT TO BATTERY** | |
| | 1 Connect the ECM electrical connector, PI01. |
| | 2 Turn the ignition switch to the OFF position. |
| | 3 Check for a voltage at PI12, pin 2 (RW) |
| | Is the voltage greater than 5 volts?<br>**Yes**<br>REPAIR the short to battery. For additional information, refer to the wiring diagrams. CLEAR the DTCs. TEST the system for normal operation.<br>**No**<br>GO to P6. |
| **P6: CHECK FUSE 35 OF THE FRONT POWER DISTRIBUTION BOX** | |
| | 1 Check the fuse. |
| | Is the fuse OK?<br>**Yes**<br>GO to P8.<br>**No**<br>GO to P7. |
| **P7: CHECK FUSE 35 OF THE FRONT POWER DISTRIBUTION BOX FOR A SHORT TO GROUND** | |
| | 1 Measure the resistance between electrical connector FH32, pin 41 of the front power distribution box and GROUND. |
| | Is the resistance less than 10,000 ohms?<br>**Yes**<br>REPAIR short to ground between the engine compartment fuse box and the LH bank HO2S. CLEAR the DTC. TEST the system for normal operation.<br>**No**<br>INSTALL a new fuse. CLEAR the DTC. TEST the system for normal operation. |
| **P8: CHECK THE POWER SUPPLY TO FUSE 35 OF THE FRONT POWER DISTRIBUTION BOX FOR A SHORT TO GROUND** | |
| | 1 Measure the voltage between fuse 42 electrical connector FH32, pin 47 and GROUND. |
| | Is the voltage less than 10 volts?<br>**Yes**<br>Repair the circuit from the ECM control relay to the engine compartment fuse box. CLEAR the DTC. TEST the system for normal operation.<br>**No**<br>Repair the circuit from the compartment fuse box and the HO2S. CLEAR the DTC. TEST the system for normal operation. |

| **PINPOINT TEST Q : DTC P1606. ECM RELAY.** | |
|---|---|
| **TEST CONDITIONS** | **DETAILS/RESULTS/ACTIONS** |
| **Q1: CHECK THE ECM CONTROL RELAY** | |
| | 1 Turn the ignition switch to the ON position. |
| | Does the ECM relay make an audible click?<br>**Yes**<br>GO to Q2.<br>**No**<br>GO to Q3. |
| **Q2: CHECK FOR POWER SUPPLY FROM THE ECM CONTROL RELAY** | |
| | 1 Measure the voltage between the ECM control relay FH32, pin E05 and GROUND. |
| | Is the voltage less than 10 volts?<br>**Yes**<br>GO to Q3.<br>**No**<br>REPAIR the circuit from the ECM control relay to the ECM. CLEAR the DTC. TEST the system for normal operation. |
| **Q3: CHECK FUSE 9 IN THE ENGINE COMPARTMENT FUSE BOX** | |
| | 1 Check the fuse. |
| | Is the fuse OK?<br>**Yes**<br>GO to Q4.<br>**No**<br>GO to Q8. |
| **Q4: CHECK THE POWER SUPPLY TO FUSE 9 IN THE ENGINE COMPARTMENT FUSE BOX** | |
| | 1 Measure the voltage between fuse 9 electrical connector FH32, pin 75 and GROUND. |
| | Is the voltage less than 10 volts?<br>**Yes**<br>Repair the circuit from the battery positive to the engine compartment fuse box. CLEAR the DTC. TEST the system for normal operation.<br>**No**<br>GO to Q5. |
| **Q5: CHECK THE POWER SUPPLY FROM FUSE 9 IN THE ENGINE COMPARTMENT FUSE BOX TO THE ECM CONTROL RELAY** | |
| | 1 Measure the voltage between the ECM control relay electrical connector FH32, pin 9 and GROUND. |
| | Is a the voltage less than 10 volts?<br>**Yes**<br>Repair the circuit from the engine compartment fuse box to the ECM control relay. CLEAR the DTC. TEST the system for normal operation.<br>**No**<br>INSTALL a new ECM control relay. CLEAR the DTC. TEST the system for normal operation. |
| **Q6: CHECK CONTINUITY OF THE ECM CONTROL RELAY GROUND CIRCUIT** | |
| | 1 Disconnect the ECM electrical connector EN16. |
| | 2 Remove the ECM control relay from the engine compartment fuse box. |
| | 3 Measure the resistance between the ECM electrical connector PI01, pin 40 and FH02, pin E02 of the engine compartment fuse box. |

GETtheMANUALS.org

| | |
|---|---|
| | Is the resistance less than 5 ohms?<br>**Yes**<br>GO to Q7.<br>**No**<br>REPAIR the circuit. For additional information, refer to wiring diagrams. CLEAR the DTC. TEST the system for normal operation.<br>(This circuit includes the power distribution fuse box and the EMS relay and diode.) |
| **Q7: CHECK CONTINUITY OF THE ECM CONTROL RELAY WINDING** | |
| | 1 Measure the resistance of the ECM control relay winding between pins 1 and 2 of the ECM control relay. |
| | Is the resistance less than 60 ohms?<br>**Yes**<br>INSTALL a new ECM control relay. CLEAR the DTC. TEST the system for normal operation.<br>**No**<br>GO to Q9. |
| **Q8: CHECK FUSE 9 OF THE ENGINE COMPARTMENT FUSE BOX FOR A SHORT TO GROUND** | |
| | 1 Measure the resistance between electrical connector FH32 pin 9 of the engine compartment fuse box and GROUND. |
| | Is the resistance less than 10,000 ohms?<br>**Yes**<br>REPAIR short to ground between the engine compartment fuse box and the ECM control relay. CLEAR the DTC. TEST the system for normal operation.<br>**No**<br>INSTALL a new fuse. CLEAR the DTC. TEST the system for normal operation. |
| **Q9: CHECK THE ECM CONTROL RELAY DIODE** | |
| | 1 Remove the ECM control relay diode from the engine compartment fuse box. |
| | 2 Measure the continuity of ECM control relay diode. |
| | Is the resistance less than 5 ohms?<br>**Yes**<br>Possible intermittent fault. Recheck DTCs.<br>**No**<br>INSTALL a new ECM control relay diode. Make sure that the ECM control relay diode is installed correctly. For additional information, refer to the wiring diagrams.CLEAR the DTC. TEST the system for normal operation. If DTC is repeated INSTALL a new ECM. |

**PINPOINT TEST R : P0105,P1107, P1108. MAP SENSOR.**

| TEST CONDITIONS | DETAILS/RESULTS/ACTIONS |
|---|---|
| **R1: CHECK THE GROUND CIRCUIT TO THE MAP SENSOR.** | |
| | 1 Measure the resistance between the MAP sensor electrical conector PI29, pin 4 (BG) and GROUND. |
| | Is the resistance less than 5 ohms?<br>**Yes**<br>GO to R2.<br>**No**<br>REPAIR the circuit between the MAP sensor and GROUND. For additional information, refer to wiring diagrams. CLEAR the DTC. TEST the system for normal operation. |
| **R2: CHECK THE POWER SUPPLY CIRCUIT TO THE MAP SENSOR.** | |
| | 1 Turn the ignition switch to the RUN position. |
| | 2 Measure the voltage between the MAP sensor electrical connector PI29, pin 2 (OY) and GROUND. |
| | Is the voltage greater than 5 volts?<br>**Yes**<br>GO to R3.<br>**No**<br>REPAIR the circuit between the MAP sensor electrical connector PI29 pin 2 (OY) and the the EMS 5v supply from the ECM. For additional information, refer to the wiring diagrams. CLEAR the DTC. TEST the system for normal operation. |
| **R3: CHECK CONTINUITY OF THE MAP SENSOR SIGNAL WIRE.** | |
| | 1 Measure the resistance of the circuit between MAP sensor electrical connector PI29, pin 1 (BK) and ECM electrical connector PI01, pin 127 (BK) |
| | Is the resistance less than 5 ohms?<br>**Yes**<br>GO to R4.<br>**No**<br>REPAIR the circuit between the MAP sensor electrical connector PI01, pin 1 (BK) and ECM electrical connector PI01, pin 127 (BK) For additional information, refer to the wiring diagrams. CLEAR the DTC. TEST the system for normal operation. |
| **R4: CHECK THE MAP SENSOR SIGNAL WIRE FOR SHORT TO GROUND** | |
| | 1 Disconnect the ECM electrical connector, PI01. |
| | 2 Disconnect the MAP sensor electrical connector, PI29. |
| | 3 Measure the resistance between PI01, pin 1 (BK) and GROUND. |
| | Is the resistance less than 10,000 ohms?<br>**Yes**<br>REPAIR the short to GROUND. For additional information, refer to the wiring diagrams. CLEAR the DTC. TEST the system for normal operation.<br>**No**<br>GO to R5. |
| **R5: CHECK THE MAP SENSOR SIGNAL WIRE FOR SHORT TO BATTERY** | |
| | 1 Connect the ECM electrical connector, PI01. |
| | 2 Turn the ignition switch to the ON position. |
| | 3 Check for a voltage at PI01, pin 1 (BK) |
| | Is the voltage greater than 5 volts?<br>**Yes**<br>Repair the short circuit. For additional information, refer to the wiring diagrams. CLEAR the DTC. TEST the system for normal operation.<br>**No**<br>INSTALL a new MAP sensor. CLEAR the DTC. TEST the system for normal operation. |

**PINPOINT TEST S : P0010, P1384. VVT RH.**

GETtheMANUALS.org

| TEST CONDITIONS | DETAILS/RESULTS/ACTIONS |
|---|---|

| | |
|---|---|
| **S1: CHECK THE RH VVT SOLENOID RESISTANCE** | |
| | 1 Disconnect the RH VVT solenoid electrical connector, PI16. |
| | 2 Measure the resistance between pins 1 and 2 of the RH VVT solenoid. |
| | Is the resistance 8 ohms?<br>**Yes**<br>GO to S2.<br>**No**<br>INSTALL a new RH VVT solenoid<br>REFER to: Variable Camshaft Timing (VCT) Oil Control Solenoid (303-14A Electronic Engine Controls - 2.5L NA V6 - AJV6/3.0L NA V6 - AJ27, Removal and Installation).<br>CLEAR the DTC. TEST the system for normal operation. |
| **S2: CHECK THE GROUND CIRCUIT TO THE RH VVT SOLENOID.** | |
| | 1 Disconnect the RH VVT solenoid electrical connector, PI16. |
| | 2 Measure the resistance between the RH VVT solenoid electrical connector PI16, pin 2 (B) and GROUND. |
| | Is the resistance less than 5 ohms?<br>**Yes**<br>GO to S3.<br>**No**<br>REPAIR the circuit between VVT solenoid electrical connector PI16, pin 2 (B) and GROUND. For additional information, refer to wiring diagrams. CLEAR the DTC. TEST the system for normal operation. |
| **S3: CHECK CONTINUITY OF THE VVT SOLENOID SIGNAL WIRE.** | |
| | 1 Measure the resistance between VVT solenoid electrical connector PI16 pin 1 (Y) and ECM electrical connector PI01 pin 109 (Y) |
| | Is the resistance less than 5 ohms?<br>**Yes**<br>GO to S4.<br>**No**<br>REPAIR the circuit between VVT solenoid electrical connector PI16, pin 1 (Y) and ECM electrical connector PI01 pin 109 (Y) For additional information, refer to wiring diagrams. CLEAR the DTC. TEST the system for normal operation. |
| **S4: CHECK FOR SHORT TO GROUND AT THE VVT SOLENOID SIGNAL WIRE** | |
| | 1 Disconnect the ECM electrical connector, PI01. |
| | 2 Measure the resistance between PI16, pin 1 (Y) and GROUND. |
| | Is the resistance less than 10,000 ohms?<br>**Yes**<br>REPAIR the short to GROUND. For additional information, refer to wiring diagrams. CLEAR the DTC. TEST the system for normal operation.<br>**No**<br>GO to S5. |
| **S5: CHECK FOR SHORT TO BATTERY AT THE VVT SOLENOID SIGNAL WIRE** | |
| | 1 TURN the ignition switch to the ON position. |
| | 2 Check for a voltage at PI16, pin 1 (Y) |
| | Is the voltage greater than 5 volts?<br>**Yes**<br>REPAIR the short circuit. For additional information, refer to wiring diagrams. CLEAR the DTC. TEST the system for normal operation.<br>**No**<br>GO to S6. |
| **S6: CHECK RESISTANCE OF THE VVT SOLENOID.** | |
| | 1 Check the resistance between pins 1 and 2 of the RH VVT solenoid. |
| | Is the resistance 8.0 ohms?<br>**Yes**<br>INSTALL a new ECM<br>REFER to: Engine Control Module (ECM) (303-14A Electronic Engine Controls - 2.5L NA V6 - AJV6/3.0L NA V6 - AJ27, Removal and Installation).<br>Before replacing a ECM, contact dealer technical support. CLEAR the DTC. TEST the system for normal operation.<br>**No**<br>INSTALL a new RH VVT solenoid<br>REFER to: Variable Camshaft Timing (VCT) Oil Control Solenoid (303-14A Electronic Engine Controls - 2.5L NA V6 - AJV6/3.0L NA V6 - AJ27, Removal and Installation).<br>CLEAR the DTC. TEST the system for normal operation. |

| **PINPOINT TEST T : P0020, P1396. VVT LH.** | |
|---|---|
| **TEST CONDITIONS** | **DETAILS/RESULTS/ACTIONS** |
| **T1: CHECK THE LH VVT SOLENOID RESISTANCE** | |
| | 1 Disconnect the LH VVT solenoid electrical connector, PI17. |
| | 2 Measure the resistance between pins 1 and 2 of the LH VVT solenoid. |
| | Is the resistance 8 ohms?<br>**Yes**<br>GO to T2.<br>**No**<br>INSTALL a new LH VVT solenoid<br>REFER to: Variable Camshaft Timing (VCT) Oil Control Solenoid (303-14A Electronic Engine Controls - 2.5L NA V6 - AJV6/3.0L NA V6 - AJ27, Removal and Installation).<br>CLEAR the DTC. TEST the system for normal operation. |
| **T2: CHECK GROUND CIRCUIT TO THE LH VVT SOLENOID.** | |
| | 1 Disconnect the LH VVT solenoid electrical connector, PI17. |
| | 2 Measure the resistance between the LH VVT solenoid electrical connector PI17, pin 2 (B) and GROUND. |
| | Is the resistance less than 5 ohms?<br>**Yes**<br>GO to T3.<br>**No**<br>REPAIR the circuit between VVT solenoid electrical connector PI17, pin 2 (B) and GROUND. For additional information, refer to the wiring diagrams. CLEAR the DTC. TEST the system for normal operation. |
| **T3: CHECK CONTINUITY OF THE LH VVT SOLENOID SIGNAL WIRE.** | |
| | 1 Measure the resistance between VVT solenoid electrical connector PI17, pin 1 (YU) and ECM electrical connector PI01, pin 110 (YU) |

GETTHEMANUALS.org

| | |
|---|---|
| | Is the resistance less than 5 ohms?<br>**Yes**<br>GO to T4.<br>**No**<br>REPAIR the circuit between VVT solenoid electrical connector PI17 pin 1 (YU) and ECM electrical connector PI01 pin 110 (YU) For additional information, refer to the wiring diagrams. CLEAR the DTC. TEST the system for normal operation. |
| **T4: CHECK FOR SHORT TO GROUND AT THE LH VVT SOLENOID SIGNAL WIRE** | |
| | 1 Disconnect the ECM electrical connector, PI01. |
| | 2 Measure the resistance between PI17, pin 1 (YU) and GROUND. |
| | Is the resistance less than 10,000 ohms?<br>**Yes**<br>REPAIR the short to GROUND. For additional information, refer to the wiring diagrams. CLEAR the DTC. TEST the system for normal operation.<br>**No**<br>GO to T5. |
| **T5: CHECK FOR SHORT TO BATTERY AT THE LH VVT SOLENOID SIGNAL WIRE** | |
| | 1 TURN the ignition switch to the ON position. |
| | 2 Check for a voltage at PI17, pin 1 (YU) |
| | Is the voltage greater than 5 volts?<br>**Yes**<br>REPAIR the short circuit. For additional information, refer to the wiring diagrams. CLEAR the DTC. TEST the system for normal operation.<br>**No**<br>GO to T6. |
| **T6: CHECK RESISTANCE OF THE LH VVT SOLENOID.** | |
| | 1 Check the resistance between pins 1 and 2 of the LH VVT solenoid. |
| | Is the resistance 8.0 ohms?<br>**Yes**<br>INSTALL a new ECM<br>REFER to: Engine Control Module (ECM) (303-14A Electronic Engine Controls - 2.5L NA V6 - AJV6/3.0L NA V6 - AJ27, Removal and Installation).<br>Before replacing a ECM, contact dealer technical support.<br>**No**<br>INSTALL a new LH VVT solenoid<br>REFER to: Variable Camshaft Timing (VCT) Oil Control Solenoid (303-14A Electronic Engine Controls - 2.5L NA V6 - AJV6/3.0L NA V6 - AJ27, Removal and Installation).<br>CLEAR the DTC. TEST the system for normal operation. |

| **PINPOINT TEST U : P1549. IMT VALVE 1.** | |
|---|---|
| **TEST CONDITIONS** | **DETAILS/RESULTS/ACTIONS** |
| **U1: CHECK THE RH IMT VALVE RESISTANCE** | |
| | 1 Disconnect the IMT valve electrical connector,PI30. |
| | 2 Measure the resistance between pins 1 and 2 of the IMT valve. |
| | Is the resistance 30 ohms?<br>**Yes**<br>GO to U2.<br>**No**<br>INSTALL a new IMT valve. CLEAR the DTC. TEST the system for normal operation. |
| **U2: CHECK THE POWER SUPPLY CIRCUIT TO THE IMT VALVE 1.** | |
| | 1 Turn the ignition switch to the ON position. |
| | 2 Measure the voltage between IMT valve 1 electrical connector PI30, pin 1 (NG) and GROUND. |
| | Is the voltage greater than 10 volts?<br>**Yes**<br>GO to U3.<br>**No**<br>REPAIR the circuit between the IMT valve 1 electrical connector PI30, pin 1 (NG) and the Battery power bus 2.<br>(This circuit includes the power distribution fuse box and the EMS control relay. For additional information, refer to wiring diagrams.)<br>CLEAR the DTC. TEST the system for normal operation. |
| **U3: CHECK CONTINUITY OF THE IMT VALVE 1 SIGNAL WIRE.** | |
| | 1 Disconnect the ECM electrical connector, PI01. |
| | 2 Measure the resistance between the IMT valve 1 electrical connector PI30, pin 2 (OY) and the ECM electrical connector PI01, pin 38 (OY) |
| | Is the resistance less than 5 ohms?<br>**Yes**<br>GO to U4.<br>**No**<br>REPAIR the circuit between the IMT valve 1 electrical connector PI30, pin 2 (OY)and the ECM electrical connector PI01, pin 38 (OY) For additional information, refer to wiring diagrams. CLEAR the DTC. TEST the system for normal operation. |
| **U4: CHECK IMT VALVE SIGNAL WIRE FOR SHORT TO GROUND** | |
| | 1 Measure the resistance between PI30, pin 2 (OY) and GROUND. |
| | Is the resistance less than 10,000 ohms?<br>**Yes**<br>REPAIR the short to GROUND. For additional information, refer to wiring digrams. CLEAR the DTC. TEST the system for normal operation.<br>**No**<br>GO to U5. |
| **U5: CHECK IMT VALVE SIGNAL WIRE FOR SHORT TO BATTERY** | |
| | 1 Connect the ECM electrical connector, PI01. |
| | 2 Turn the ignition switch to the ON position. |
| | 3 Check for a voltage at PI30, pin 2 (OY) |

GETtheMANUALS.org

| | |
|---|---|
| | Is the voltage greater than 5 volts?<br>**Yes**<br>REPAIR the short to battery. For additional information, refer to wiring digrams. CLEAR the DTC. TEST the system for normal operation.<br>**No**<br>INSTALL a new IMT valve. CLEAR the DTC. TEST the system for normal operation. If the DTC is repeated, INSTALL a new ECM.<br>REFER to: Engine Control Module (ECM) (303-14A Electronic Engine Controls - 2.5L NA V6 - AJV6/3.0L NA V6 - AJ27, Removal and Installation).<br>Before replacing a ECM, contact dealer technical support. CLEAR the DTC. TEST the system for normal operation. |

**PINPOINT TEST V : P1532. IMT VALVE 2.**

| TEST CONDITIONS | DETAILS/RESULTS/ACTIONS |
|---|---|
| **V1: CHECK THE LH IMT VALVE RESISTANCE** | |
| | 1 Disconnect the IMT valve electrical connector, PI31. |
| | 2 Measure the resistance between pins 1 and 2 of the IMT valve. |
| | Is the resistance 30 ohms?<br>**Yes**<br>GO to V2.<br>**No**<br>INSTALL a new IMT valve. CLEAR the DTC. TEST the system for normal operation. |
| **V2: CHECK THE POWER SUPPLY CIRCUIT TO THE IMT VALVE 2.** | |
| | 1 Turn the ignition switch to the ON position. |
| | 2 Measure the voltage between IMT valve 2 electrical connector PI31, pin 1 (NG) and GROUND. |
| | Is the voltage greater than 10 volts?<br>**Yes**<br>GO to V3.<br>**No**<br>REPAIR the circuit between the IMT valve 2 electrical connector PI31, pin 1 (NG) and the Battery power bus 2.<br>(This circuit includes the power distribution fuse box and the EMS control relay. For additional information, refer to wiring diagrams.)<br>CLEAR the DTC. TEST the system for normal operation. |
| **V3: CHECK CONTINUITY OF THE IMT VALVE 2 SIGNAL WIRE.** | |
| | 1 Disconnect the ECM electrical connector, PI01. |
| | 2 Measure the resistance between the IMT valve 2 electrical connector PI31, pin 2 (OG) and the ECM electrical connector PI01, pin 39 (OG) |
| | Is the resistance less than 5 ohms?<br>**Yes**<br>GO to V4.<br>**No**<br>REPAIR the circuit between the IMT valve 2 electrical connector PI31, pin 2 (OG) and the ECM electrical connector PI01, pin 39 (OG) For additional information, refer to wiring diagrams. CLEAR the DTC. TEST the system for normal operation. |
| **V4: CHECK IMT VALVE SIGNAL WIRE FOR SHORT TO GROUND** | |
| | 1 Measure the resistance between PI31, pin 2 (OG) and GROUND. |
| | Is the resistance less than 10,000 ohms?<br>**Yes**<br>REPAIR the short to GROUND. For additional information, refer to wiring digrams. CLEAR the DTC. TEST the system for normal operation.<br>**No**<br>GO to V5. |
| **V5: CHECK IMT VALVE SIGNAL WIRE FOR SHORT TO BATTERY** | |
| | 1 Connect the ECM electrical connector, PI01. |
| | 2 Turn the ignition switch to the ON position. |
| | 3 Check for a voltage at PI31, pin 2 (OG) |
| | Is the voltage greater than 1 volt?<br>**Yes**<br>REPAIR the short to battery. For additional information, refer to wiring digrams. CLEAR the DTC. TEST the system for normal operation.<br>**No**<br>INSTALL a new IMT valve. CLEAR the DTC. TEST the system for normal operation. If the DTC is repeated, INSTALL a new ECM.<br>REFER to: Engine Control Module (ECM) (303-14A Electronic Engine Controls - 2.5L NA V6 - AJV6/3.0L NA V6 - AJ27, Removal and Installation).<br>Before replacing a ECM, contact Dealer Technical Support |

**PINPOINT TEST W : P0532, AIR CONDITIONING REFRIGERANT PRESSURE SENSOR CIRCUIT LOW INPUT**

| TEST CONDITIONS | DETAILS/RESULTS/ACTIONS |
|---|---|
| **W1: CHECK THE REFRIGERANT PRESSURE SENSOR CIRCUIT FOR SHORT TO GROUND** | |
| | 1 Disconnect the refrigerant pressure sensor electrical connector, FH110. |
| | 2 Measure the resistance between FH110, pin 003 (WU) and GROUND. |
| | Is the resistance less than 10,000 ohms?<br>**Yes**<br>REPAIR the short to ground. For additional information, refer to wiring diagrams. CLEAR the DTC. TEST the system for normal operation.<br>**No**<br>GO to W2. |
| **W2: CHECK THE REFRIGERANT PRESSURE SENSOR CIRCUIT FOR OPEN CIRCUIT** | |
| | 1 Disconnect the ECM electrical connector, PI001. |
| | 2 Measure the resistance between PI001, pin 121 (G) and the refrigerant pressure sensor electrical connector, FH110, pin 003 (G). |
| | Is the resistance less than 5 ohms?<br>**Yes**<br>GO to Pinpoint Test Z.<br>**No**<br>REPAIR the circuit. For additional information, refer to wiring digrams. CLEAR the DTC. TEST the system for normal |

GETtheMANUALS.org

| | |
|---|---|
| | operation |

| PINPOINT TEST X : P0533, AIR CONDITIONING REFRIGERANT PRESSURE SENSOR CIRCUIT HIGH INPUT | |
|---|---|
| **TEST CONDITIONS** | **DETAILS/RESULTS/ACTIONS** |
| **X1: CHECK THE REFRIGERANT PRESSURE SENSOR CIRCUIT FOR SHORT TO BATTERY** | |
| | 1 Turn the ignition switch to the OFF position. |
| | 2 Disconnect the refrigerant pressure sensor electrical connector, FH110. |
| | 3 Check for a voltage between FH110, pin 003 (WU) and GROUND. |
| | Is the voltage greater than 1 volt?<br>**Yes**<br>REPAIR the short to battery. For additional information, refer to wiring diagrams. CLEAR the DTC. TEST the system for nprmal operation.<br>**No**<br>GO to Pinpoint Test Z. |

| PINPOINT TEST Y : P1582. FLIGHT RECORDER DATA STORED. | |
|---|---|
| **TEST CONDITIONS** | **DETAILS/RESULTS/ACTIONS** |
| **Y1: EXTRACT THE FLIGHT RECORDER DATA.** | |
| | • NOTE: Flight recorder data can only be extracted using the Jaguar approved diagnostic system, where available.<br>1 Connect the Jaguar approved diagnostic system, or code reader. |
| | Is DTC P1582 stored?<br>**Yes**<br>Refer to dealer technical support for information on extracting data.<br>**No**<br>Test not applicable. |

| PINPOINT TEST Z : P1240, P1241, P1242. SENSOR POWER SUPPLY. | |
|---|---|
| **TEST CONDITIONS** | **DETAILS/RESULTS/ACTIONS** |
| **Z1: CHECK THE POWER SUPPLY CIRCUIT TO THE FUEL INJECTION SENSOR.** | |
| | 1 Disconnect the fuel injection sensor electrical connector, IJ7. |
| | 2 Turn the ignition switch to the ON position. |
| | 3 Measure the voltage between fuel injection Sensor electrical connector IL12, pin 1 (OY) and GROUND. |
| | Is the voltage greater than 4 volts?<br>**Yes**<br>GO to Z2.<br>**No**<br>REPAIR the circuit between the fuel injection Sensor electrical connector IL12, pin 1 (OY) and the sensor 5 volt supply bus.<br>(The fault could be in any of the other sensors in this circuit, or in any of the spurs in this circuit. For additional information, refer to wiring diagrams.)<br>CLEAR the DTC. TEST the system for normal operation. |
| **Z2: CHECK THE POWER SUPPLY CIRCUIT TO THE FUEL INJECTION SENSOR FOR SHORT TO BATTERY.** | |
| | 1 Measure the voltage between fuel injection sensor electrical connector IL12, pin 1 (OY) and GROUND. |
| | Is the voltage greater than 6 volts?<br>**Yes**<br>REPAIR the circuit between the fuel injection sensor electrical connector IL12, pin 1 (OY) and the sensor 5 volt supply bus.<br>(The short could be in any of the other sensors in this circuit, or in any of the spurs in this circuit. For additional information, refer to wiring diagrams.)<br>CLEAR the DTC. TEST the system for normal operation.<br>**No**<br>GO to Z3. |
| **Z3: CHECK THE POWER SUPPLY CIRCUIT TO THE MAP SENSOR.** | |
| | 1 Disconnect the MAP sensor electrical connector, PI29. |
| | 2 Turn the ignition switch to the ON position. |
| | 3 Measure the voltage between MAP Sensor electrical connector PI29, pin 2 (OY) and GROUND. |
| | Is the voltage greater than 4 volts?<br>**Yes**<br>GO to Z4.<br>**No**<br>REPAIR the circuit between the MAP Sensor electrical connector PI29, pin 2(OY) and the sensor 5 volt supply bus.<br>(The fault could be in any of the other sensors in this circuit, or in any of the spurs in this circuit. For additional information, refer to wiring diagrams.)<br>CLEAR the DTC. TEST the system for normal operation. |
| **Z4: CHECK THE POWER SUPPLY CIRCUIT TO THE MAP SENSOR FOR SHORT TO BATTERY.** | |
| | 1 Measure the voltage between MAP Sensor electrical connector PI29, pin 2 (OY) and GROUND. |
| | Is the voltage greater than 6 volts?<br>**Yes**<br>REPAIR the circuit between the MAP Sensor electrical connector PI29, pin 2(OY) and the sensor 5 volt supply bus.<br>(The short could be in any of the other sensors in this circuit, or in any of the spurs in this circuit. For additional information, refer to wiring diagrams.)<br>CLEAR the DTC. TEST the system for normal operation.<br>**No**<br>GO to Z5. |
| **Z5: CHECK THE POWER SUPPLY CIRCUIT TO THE FUEL TANK PRESSURE SENSOR.** | |
| • NOTE: Access to the fuel tank pressure sensor involves the removal of the fuel tank. To reduce the amount of work necessary, a slave harness could be used. This can be connected at the access port beneath the rear seat. Tests can then be carried out via the slave harness and sensor. If system operation is normal with the slave harness and sensor, the fault lies in the vehicle's harness or sensor. | |
| | 1 Disconnect the fuel tank pressure sensor electrical connector, FP1. (see note above) |
| | 2 Turn the ignition switch to the ON position. |
| | 3 Measure the voltage between fuel tank pressure sensor electrical connector FP1, pin 3 (OY) and GROUND. |

GETTHEMANUALS.org

| | |
|---|---|
| | Is the voltage greater than 4 volts?<br>**Yes**<br>GO to Z6.<br>**No**<br>REPAIR the circuit between the fuel tank pressure sensor electrical connector FP1, pin 3 (OY) and the sensor 5 volt supply bus.<br>(The fault could be in any of the other sensors in this circuit, or in any of the spurs in this circuit. For additional information, refer to wiring diagrams.)<br>CLEAR the DTC. TEST the system for normal operation. |
| **Z6: CHECK THE POWER SUPPLY CIRCUIT TO THE FUEL TANK PRESSURE SENSOR FOR SHORT TO BATTERY.** | |
| | 1 Measure the voltage between fuel tank pressure sensor electrical connector FP1, pin 3 (OY) and GROUND. |
| | Is the voltage greater than 6 volts?<br>**Yes**<br>REPAIR the circuit between the fuel tank pressure sensor electrical connector FP1, pin 3 (OY) and the sensor 5 volt supply bus.<br>(The short could be in any of the other sensors in this circuit, or in any of the spurs in this circuit. For additional information, refer to wiring diagrams.)<br>CLEAR the DTC. TEST the system for normal operation.<br>**No**<br>GO to Z7. |
| **Z7: CHECK THE POWER SUPPLY CIRCUIT TO THE ACCELERATOR PEDAL POSITION SENSOR.** | |
| | 1 Disconnect the accelerator pedal position sensor electrical connector. |
| | 2 Turn the ignition switch to the ON position. |
| | 3 Measure the voltage between accelerator pedal position sensor electrical connector CA88, pin 2 (OY) and GROUND. |
| | Is the voltage greater than 4 volts?<br>**Yes**<br>GO to Z8.<br>**No**<br>REPAIR the circuit between the accelerator pedal position sensor electrical connector CA88, pin 2 (OY) and the sensor 5 volt supply bus.<br>(The fault could be in any of the other sensors in this circuit, or in any of the spurs in this circuit. For additional information, refer to wiring diagrams.)<br>CLEAR the DTC. TEST the system for normal operation. |
| **Z8: CHECK THE POWER SUPPLY CIRCUIT TO THE ACCELERATOR PEDAL POSITION SENSOR FOR SHORT TO BATTERY.** | |
| | 1 Measure the voltage between accelerator pedal position sensor electrical connector CA88, pin 2 (OY) and GROUND. |
| | Is the voltage greater than 6 volts?<br>**Yes**<br>REPAIR the circuit between the accelerator pedal position sensor electrical connector CA88, pin 2 (OY) and the sensor 5 volt supply bus.<br>(The short could be in any of the other sensors in this circuit, or in any of the spurs in this circuit. For additional information, refer to wiring diagrams.)<br>CLEAR the DTC. TEST the system for normal operation.<br>**No**<br>GO to Z9. |
| **Z9: CHECK THE POWER SUPPLY CIRCUIT TO THE THROTTLE POSITION SENSOR.** | |
| | 1 Turn the ignition switch to the ON position. |
| | 2 Measure the voltage between throttle position sensor electrical connector PI26, pin 2 (OY) and GROUND. |
| | Is the voltage greater than 4 volts?<br>**Yes**<br>GO to Z10.<br>**No**<br>REPAIR the circuit between the throttle position sensor electrical connector PI26, pin 2 (OY) and the sensor 5 volt supply bus.<br>(The fault could be in any of the other sensors in this circuit, or in any of the spurs in this circuit. For additional information, refer to wiring diagrams.)<br>CLEAR the DTC. TEST the system for normal operation. |
| **Z10: CHECK THE POWER SUPPLY CIRCUIT TO THE THROTTLE POSITION SENSOR FOR SHORT TO BATTERY.** | |
| | 1 Measure the voltage between throttle position sensor electrical connector PI26, pin 2 (OY) and GROUND. |
| | Is the voltage greater than 6 volts?<br>**Yes**<br>REPAIR the circuit between the throttle position sensor electrical connector PI26, pin 2 (OY) and the sensor 5 volt supply bus.<br>(The short could be in any of the other sensors in this circuit, or in any of the spurs in this circuit. For additional information, refer to wiring diagrams.)<br>CLEAR the DTC. TEST the system for normal operation.<br>**No**<br>GO to Z11. |
| **Z11: CHECK THE POWER SUPPLY CIRCUIT TO THE AIR CONDITIONING PRESSURE SENSOR.** | |
| | 1 Turn the ignition switch to the ON position. |
| | 2 Measure the voltage between ACP sensor electrical connector, FH110, pin 2 (OY) and GROUND. |
| | Is the voltage greater than 4 volts?<br>**Yes**<br>GO to Z12.<br>**No**<br>REPAIR the circuit between the ACP sensor electrical connector, FH110, pin 2 (OY) and the sensor 5 volt supply bus.<br>(The fault could be in any of the other sensors in this circuit, or in any of the spurs in this circuit. For additional information, refer to wiring diagrams.)<br>CLEAR the DTC. TEST the system for normal operation. |
| **Z12: CHECK THE POWER SUPPLY CIRCUIT TO THE AIR CONDITIONING PRESSURE SENSOR FOR SHORT TO BATTERY.** | |
| | 1 Measure the voltage between ACP sensor electrical connector, FH110, pin 2 (OY) and GROUND. |
| | Is the voltage greater than 6 volts?<br>**Yes**<br>REPAIR the circuit between the ACP sensor electrical connector, FH110, pin 2 (OY) and the sensor 5 volt supply bus.<br>(The short could be in any of the other sensors in this circuit, or in any of the spurs in this circuit. For additional information, refer to wiring |

GETtheMANUALS.org

| | |
|---|---|
| | diagrams.)<br>CLEAR the DTC. TEST the system for normal operation.<br>**No**<br>No electrical fault in power supply circuit. Recheck DTCs, using the Jaguar approved diagnostic system, or code reader.<br>(This fault could also be a PSV failure within the ECM.) |

| **PINPOINT TEST AA : P1243. SENSOR GROUND CIRCUITS.** | |
|---|---|
| **TEST CONDITIONS** | **DETAILS/RESULTS/ACTIONS** |
| **AA1: CHECK THE GROUND CIRCUIT TO THE ENGINE COOLANT TEMPERATURE SENSOR.** | |
| | 1 Measure the resistance between engine coolant temperature sensor electrical connector PI25, pin 1 (BG) and GROUND. |
| | Is the resistance less than 5 ohms?<br>**Yes**<br>GO to AA2.<br>**No**<br>REPAIR the circuit between the engine coolant temperature sensor electrical connector PI25, pin 1 (BG) and GROUND.<br>(This circuit includes the ECM. For additional information, refer to wiring diagrams.)<br>CLEAR the DTC. TEST the system for normal operation. |
| **AA2: CHECK THE GROUND CIRCUIT TO THE ENGINE OIL TEMPERATURE SENSOR.** | |
| | 1 Measure the resistance between engine oil temperature sensor electrical connector PI24, pin 2 (BG) and GROUND. |
| | Is the resistance less than 5 ohms?<br>**Yes**<br>GO to AA3.<br>**No**<br>REPAIR the circuit between the engine oil temperature sensor electrical connector PI24, pin 2 (BG) and GROUND.<br>(This circuit includes the ECM. For additional information, refer to wiring diagrams.)<br>CLEAR the DTC. TEST the system for normal operation. |
| **AA3: CHECK THE GROUND CIRCUIT TO THE FUEL INJECTION PRESSURE SENSOR.** | |
| | 1 Measure the resistance between fuel injection pressure sensor electrical connector IL12, pin 2 (BG) and GROUND. |
| | Is the resistance less than 5 ohms?<br>**Yes**<br>GO to AA4.<br>**No**<br>REPAIR the circuit between the fuel injection pressure sensor electrical connector IL12, pin 2 (BG) and GROUND.<br>(This circuit includes the ECM. For additional information, refer to wiring diagrams.)<br>CLEAR the DTC. TEST the system for normal operation. |
| **AA4: CHECK THE GROUND CIRCUIT TO THE EFT SENSOR.** | |
| | 1 Measure the resistance between EFT Sensor electrical connector IL09, pin 1 (BG) and GROUND. |
| | Is the resistance less than 5 ohms?<br>**Yes**<br>GO to AA5.<br>**No**<br>REPAIR the circuit between the EFT Sensor electrical connector IL09, pin 1 (BG) and GROUND.<br>(This circuit includes the ECM. For additional information, refer to wiring diagrams.)<br>CLEAR the DTC. TEST the system for normal operation. |
| **AA5: CHECK THE GROUND CIRCUIT TO THE MAP SENSOR.** | |
| | 1 Measure the resistance between MAP Sensor electrical connector PI29, pin 4 (BG) and GROUND. |
| | Is the resistance less than 5 ohms?<br>**Yes**<br>GO to AA6.<br>**No**<br>REPAIR the circuit between the MAP Sensor electrical connector PI29, pin 4 (BG) and GROUND.<br>(This circuit includes the ECM. For additional information, refer to wiring diagrams.)<br>CLEAR the DTC. TEST the system for normal operation. |
| **AA6: CHECK THE GROUND CIRCUIT TO THE FUEL TANK PRESSURE SENSOR.** | |
| • NOTE: Access to the FTP sensor involves the removal of the fuel tank. To reduce the amount of work necessary, a slave harness could be used. This can be connected at the access port beneath the rear seat. Tests can then be carried out via the slave harness and sensor. If system operation is normal with the slave harness and sensor, the fault lies in the vehicle's harness or sensor. | |
| | 1 Measure the resistance between FTP Sensor electrical connector FP01, pin 2 (BG) and GROUND. |
| | Is the resistance less than 5 ohms?<br>**Yes**<br>GO to AA7.<br>**No**<br>REPAIR the circuit between the FTP Sensor electrical connector FP01, pin 2 (BG) and GROUND.<br>(This circuit includes the ECM. For additional information, refer to wiring diagrams.)<br>CLEAR the DTC. TEST the system for normal operation. |
| **AA7: CHECK THE GROUND CIRCUIT TO THE APP SENSOR. (TRACK 1)** | |
| | 1 Measure the resistance between APP Sensor electrical connector CA88, pin 6 (BG) and GROUND. |
| | Is the resistance less than 5 ohms?<br>**Yes**<br>GO to AA8.<br>**No**<br>REPAIR the circuit between the APP Sensor electrical connector CA88, pin 6 (BG) and GROUND.<br>(This circuit includes the ECM. For additional information, refer to wiring diagrams.)<br>CLEAR the DTC. TEST the system for normal operation. |
| **AA8: CHECK THE GROUND CIRCUIT TO THE TP SENSOR.** | |
| | 1 Measure the resistance between TP Sensor electrical connector PI26, pin 1 (BG) and GROUND. |

GETtheMANUALS.org

| | |
|---|---|
| | Is the resistance less than 5 ohms?<br>**Yes**<br>GO to AA9.<br>**No**<br>REPAIR the circuit between the TP Sensor electrical connector PI26, pin 1 (BG) and GROUND.<br>(This circuit includes the ECM. For additional information, refer to wiring diagrams.)<br>CLEAR the DTC. TEST the system for normal operation. |
| **AA9: CHECK THE GROUND CIRCUIT TO THE APP SENSOR. (TRACK 3)** | |
| | 1 Measure the resistance between APP Sensor electrical connector CA88, pin 3 (BG) and GROUND. |
| | Is the resistance less than 5 ohms?<br>**Yes**<br>GO to AA10.<br>**No**<br>REPAIR the circuit between the APP Sensor electrical connector CA88, pin 3 (BG) and GROUND.<br>(This circuit includes the ECM. For additional information, refer to wiring diagrams.)<br>CLEAR the DTC. TEST the system for normal operation. |
| **AA10: CHECK THE GROUND CIRCUIT TO THE AIR CONDITIONING PRESSURE SENSOR.** | |
| | 1 Measure the resistance between ACP sensor electrical connector, FH110, pin 1 (BG) and GROUND. |
| | Is the resistance less than 5 ohms?<br>**Yes**<br>No electrical fault in ground circuit. Recheck DTCs.<br>**No**<br>REPAIR the circuit between the ACP sensor electrical connector, FH110, pin 1 (BG) and GROUND.<br>(This circuit includes the ECM. For additional information, refer to wiring diagrams.)<br>CLEAR the DTC. TEST the system for normal operation. |

## PINPOINT TEST AB : P0480. RADIATOR COOLING FAN MODULE DRIVE.

| TEST CONDITIONS | DETAILS/RESULTS/ACTIONS |
|---|---|
| **AB1: CHECK THE PULSE WIDTH MODULATED SIGNAL TO THE COOLING FAN MODULE.** | |
| | 1 Disconnect the radiator cooling fan module electrical connector, FH108. |
| | 2 Run the engine to a temperature at which the cooling fans would operate. |
| | 3 Using a suitable meter, test for a pulse width modulated signal at FH108, pin 1 (WU) |
| | Is a PWM signal present?<br>**Yes**<br>INSTALL a new Cooling Fan Module<br>REFER to: Cooling Module - Vehicles Without: Supercharger (303-03A Engine Cooling - V8 4.2L Petrol/V8 S/C 4.2L Petrol/2.5L NA V6 - AJV6/3.0L NA V6 - AJ27, Removal and Installation).<br>CLEAR the DTC. TEST the system for normal operation.<br>**No**<br>GO to AB2. |
| **AB2: CHECK CONTINUITY OF THE RADIATOR COOLING FAN MODULE SIGNAL WIRE.** | |
| | 1 Turn the ignition switch to the OFF position. |
| | 2 Disconnect the ECM electrical connector, PI01. |
| | 3 Measure the resistance between the Radiator Cooling Fan Module electrical connector FH108, pin 1 (WU) and the ECM electrical connector PI01, pin 1 (WU) |
| | Is the resistance less than 5 ohms?<br>**Yes**<br>INSTALL a new ECM.<br>REFER to: Engine Control Module (ECM) (303-14A Electronic Engine Controls - 2.5L NA V6 - AJV6/3.0L NA V6 - AJ27, Removal and Installation).<br>Before replacing a ECM, contact dealer technical support.<br>**No**<br>REPAIR the circuit between the Radiator Cooling Fan Module electrical connector FH108, pin 3 (WU) and the ECM electrical connector PI01, pin 51 (WU) For additional information, refer to wiring diagrams. CLEAR the DTC. TEST the system for normal operation. |

## PINPOINT TEST AC : P0646, P0647. AIR CONDITIONING CLUTCH RELAY DRIVE.

| TEST CONDITIONS | DETAILS/RESULTS/ACTIONS |
|---|---|
| **AC1: CHECK THE GROUND SUPPLY TO THE AIR CONDITIONING CLUTCH.** | |
| | WARNING: This test involves working in proximity to rotating parts. Make sure due care is exercised. |
| | 1 Turn the ignition switch to the ON position, |
| | 2 Disconnect the ECM electrical connector, PI01. |
| | 3 Disconnect the air conditioning clutch electrical connector, PI49. |
| | 4 Measure the resistance between PI49, pin 2, (B) and GROUND. |
| | Is the resistance less than 5 ohms?<br>**Yes**<br>REPAIR the circuit between PI49, pin 2, (B) and GROUND. For additional information, refer to wiring diagrams. CLEAR the DTC. TEST the system for normal operation.<br>**No**<br>GO to AC2. |
| **AC2: CHECK THE CIRCUIT INTEGRITY BETWEEN THE ECM AND THE AIR CONDITIONING CLUTCH.** | |
| | 1 Apply a GROUND to the disconnected ECM electrical connector, PI01, pin 34 (BG) |
| | 2 Measure the voltage at air conditioning clutch electrical connector, PI49, pin 1 (RG) |
| | Is the voltage greater than 10 volts?<br>**Yes**<br>GO to AC3.<br>**No**<br>GO to AC4. |
| **AC3: CHECK THE AIR CONDITIONING CLUTCH RELAY TO ECM CIRCUIT FOR SHORT TO GROUND.** | |
| | 1 Measure the resistance between PI01, pin 34 (BG) and GROUND. |

GETtheMANUALS.org

| | |
|---|---|
| | Is the resistance less than 10,000 ohms?<br>**Yes**<br>GO to AC4.<br>**No**<br>INSTALL a new air conditioning compressor clutch relay. For additional information, refer to the electrical guide. CLEAR the DTC. TEST the system for normal operation. If the DTC is repeated, INSTALL a new ECM.<br>REFER to: Engine Control Module (ECM) (303-14A Electronic Engine Controls - 2.5L NA V6 - AJV6/3.0L NA V6 - AJ27, Removal and Installation).<br>Before replacing a ECM, contact dealer technical support. |
| **AC4: CHECK THE CIRCUIT BETWEEN THE AIR CONDITIONING COMPRESSOR CLUTCH AND THE RELAY FOR SHORT TO BATTERY.** | |
| | 1 Measure the voltage between PI49, pin 1 (RG) and GROUND. |
| | Is the voltage greater than 5 volts?<br>**Yes**<br>REPAIR the short circuit. For additional information, refer to wiring diagrams. CLEAR the DTC. TEST the system for normal operation.<br>**No**<br>GO to AC5. |
| **AC5: CHECK THE CIRCUIT BETWEEN THE AIR CONDITIONING COMPRESSOR CLUTCH AND THE ACCC RELAY FOR SHORT TO GROUND.** | |
| | 1 Measure the resistance between PI49, pin 1 (RG) and GROUND. |
| | Is the resistance less than 10,000 ohms?<br>**Yes**<br>REPAIR the short circuit. For additional information, refer to wiring diagrams. CLEAR the DTC. TEST the system for normal operation.<br>**No**<br>GO to AC6. |
| **AC6: CHECK THE CIRCUIT BETWEEN FUSE 32 OF THE FRONT POWER DISTRIBUTION FUSE BOX AND THE ACCC RELAY FOR SHORT TO GROUND.** | |
| | 1 Remove fuse 32. |
| | 2 Measure the resistance between fuse box electrical connector, FH32, pin 38 and GROUND. |
| | Is the resistance less than 10,000 ohms?<br>**Yes**<br>REPAIR the short circuit. For additional information, refer to wiring diagrams. CLEAR the DTC. TEST the system for normal operation.<br>**No**<br>GO to AC7. |
| **AC7: CHECK THE ACCC RELAY BASE FOR BATTERY VOLTAGE AT PIN 3.** | |
| | 1 Refit fuse 32. |
| | 2 Measure the voltage between the ACCC relay base, pin 3 and GROUND. |
| | Is the voltage greater than 10 volts?<br>**Yes**<br>GO to AC8.<br>**No**<br>Check/replace fuses. REPAIR the circuit between the relay base and the battery power bus 1. For additional information, refer to wiring diagrams. CLEAR the DTC. TEST the system for normal operation. |
| **AC8: CHECK THE CIRCUIT BETWEEN PIN 1 OF THE ACCC RELAY BASE AND THE POWER DISTRIBUTION FUSE BOX FOR SHORT TO GROUND.** | |
| | 1 Remove fuse 38. |
| | 2 Measure the resistance between the ACCC relay base, pin 1 and GROUND. |
| | Is the resistance less than 10,000 ohms?<br>**Yes**<br>REPAIR the short circuit. For additional information, refer to wiring diagrams. CLEAR the DTC. TEST the system for normal operation.<br>**No**<br>GO to AC9. |
| **AC9: CHECK THE ACCC RELAY BASE FOR BATTERY VOLTAGE AT PIN 1** | |
| | 1 Refit fuse 38. |
| | 2 Turn the ignition switch to the ON position. |
| | 3 Measure the voltage between ACCC relay base, pin 1, and GROUND. |
| | Is the voltage greater than 10 volts?<br>**Yes**<br>GO to AC10.<br>**No**<br>Check/replace fuses. REPAIR the circuit between the relay base and the battery power bus 2. For additional information, refer to wiring diagrams. CLEAR the DTC. TEST the system for normal operation.<br>(This circuit includes the EMS relay, and fuses 9.) |
| **AC10: CHECK THE CIRCUIT BETWEEN THE ECM AND THE ACCC RELAY BASE FOR CONTINUITY.** | |
| | 1 Remove the ACCC relay. |
| | 2 Measure the resistance between the ECM electrical connector, PI01, pin 34 (BG) and ACCC relay base, pin 2. |
| | Is the resistance less than 5 ohms?<br>**Yes**<br>GO to AC11.<br>**No**<br>REPAIR the circuit. For additional information, refer to wiring diagrams. CLEAR the DTC. TEST the system for normal operation. |
| **AC11: CHECK THE CIRCUIT BETWEEN THE ECM AND THE ACCC RELAY BASE FOR SHORT TO BATTERY.** | |
| | 1 Check for a voltage between the ECM electrical connector, PI01, pin 34 (BG) and GROUND. |
| | Is the voltage greater than 5 volts?<br>**Yes**<br>REPAIR the short circuit. For additional information, refer to wiring diagrams. CLEAR the DTC. TEST the system for normal operation.<br>**No**<br>GO to AC12. |
| **AC12: CHECK THE CIRCUIT BETWEEN THE ECM AND THE ACCC RELAY BASE FOR SHORT TO GROUND.** | |
| | 1 Measure the resistance between the ECM electrical connector, PI01, pin 34 (BG) and GROUND. |

GETtheMANUALS.org

| | |
|---|---|
| | Is the resistance less than 10,000 ohms?<br>**Yes**<br>REPAIR the short circuit. For additional information, refer to wiring diagrams. CLEAR the DTC. TEST the system for normal operation.<br>**No**<br>INSTALL a new ACCC relay. CLEAR the DTC. TEST the system for normal operation. |

| PINPOINT TEST AD : P1516, P1517. P/N SWITCH STARTING/DRIVING MALFUNCTIONS. | |
|---|---|
| **TEST CONDITIONS** | **DETAILS/RESULTS/ACTIONS** |
| **AD1: CHECK THE P/N INPUT TO THE ECM.** | |
| | 1 Select PARK. |
| | 2 Set the ignition switch to the ON position. |
| | 3 Measure the voltage at the ECM electrical connector PI01, pin 31 (B) |
| | Is the voltage greater than 10 volts?<br>**Yes**<br>INSTALL a new ECM.<br>REFER to: Engine Control Module (ECM) (303-14A Electronic Engine Controls - 2.5L NA V6 - AJV6/3.0L NA V6 - AJ27, Removal and Installation).<br>Before replacing a ECM, contact dealer technical support.<br>**No**<br>REPAIR the circuit between the ECM electrical connector PI01, pin 31 (B) and the ignition switch.<br>(On automatic transmission vehicles, this circuit includes the TR sensor, Central Junction Fuse Box, Ignition relay, and Inertia switch. On NAS manual transmission vehicles, this circuit also includes the Clutch Safety Switch.)<br>For additional information, refer to wiring diagrams. CLEAR the DTC. TEST the system for normal operation. |

| PINPOINT TEST AE : P1245; P1246. IGNITION SWITCH CRANK SIGNAL | |
|---|---|
| WARNING: Make sure the starter motor does not engage in the course of these tests, as injury may result. | |
| **TEST CONDITIONS** | **DETAILS/RESULTS/ACTIONS** |
| **AE1: CHECK THE START INPUT TO THE ECM** | |
| | 1 Move thte gear selector to the N position. |
| | 2 Disconnect the ECM electrical connector, PI01. |
| | 3 Remove the starter relay from the power distribution fuse box. |
| | 4 Turn the ignition switch to the CRANK position. |
| | 5 Measure the voltage between PI01, pin 6, (Y) and GROUND. |
| | Is the voltage greater than 10 volts?<br>**Yes**<br>GO to AE2.<br>**No**<br>REPAIR the circuit between the ECM and the battery. For additional information, refer to wiring diagrams. CLEAR the DTC. TEST the system for normal operation.<br>(This circuit includes the ignition switch and the power distribution fuse box. (Fuse 28).) |
| **AE2: CHECK THE START INPUT TO THE STARTER RELAY** | |
| | 1 Turn the ignition switch to the START position and hold. |
| | 2 Measure the voltage between the starter relay base, (R20) pin 1, and GROUND. |
| | Is the voltage greater than 10 volts?<br>**Yes**<br>GO to AE3.<br>**No**<br>REPAIR the circuit between the Starter relay base and the battery. For additional information, refer to wiring diagrams. CLEAR the DTC. TEST the system for normal operation.<br>(This circuit includes the ignition switch and the power distribution fuse box.) |
| **AE3: CHECK THE START INPUT WIRE FOR SHORT TO BATTERY AT ECM** | |
| | 1 Turn the ignition switch to the ON position. |
| | 2 Measure the voltage between PI01, pin 6, (Y) and GROUND. |
| | Is the voltage greater than 10 volts?<br>**Yes**<br>REPAIR the short circuit. For additional information, refer to wiring diagrams. CLEAR the DTC. TEST the system for normal operation.<br>**No**<br>GO to AE4. |
| **AE4: CHECK THE START INPUT WIRE FOR SHORT TO BATTERY AT RELAY** | |
| | 1 Turn the ignition switch to the ON position. |
| | 2 Measure the voltage between the starter relay base, pin 1, and GROUND. |
| | Is the voltage greater than 10 volts?<br>**Yes**<br>REPAIR the short circuit. For additional information, refer to wiring diagrams. CLEAR the DTC. TEST the system for normal operation.<br>**No**<br>GO to AE5. |
| **AE5: CHECK THE STARTER RELAY INPUT FROM THE ECM FOR CONTINUITY.** | |
| | 1 Measure the resistance between PI01, pin 41 (GO) and relay base, pin 2. |
| | Is the resistance less than 5 ohms?<br>**Yes**<br>GO to AE6.<br>**No**<br>REPAIR the open circuit. For additional information, refer to wiring diagrams. CLEAR the DTC. TEST the system for normal operation. |
| **AE6: CHECK THE STARTER RELAY INPUT FROM THE ECM FOR SHORT TO GROUND.** | |
| | 1 Disconnect ignition switch electrical connector, FC18. |
| | 2 Measure the resistance between PI01, pin 41 (GO) and GROUND. |

GETtheMANUALS.org

| | |
|---|---|
| | Is the resistance less than 10,000 ohms?<br>**Yes**<br>REPAIR the short circuit. For additional information, refer to wiring diagrams. CLEAR the DTC. TEST the system for normal operation.<br>**No**<br>GO to AE7. |
| **AE7: CHECK THE STARTER RELAY INPUT FROM THE ECM FOR SHORT TO BATTERY.** | |
| | 1 Measure the voltage between the starter relay base, pin 2, and GROUND. |
| | Is the voltage greater than 5 volts?<br>**Yes**<br>REPAIR the short circuit. For additional information, refer to wiring diagrams. CLEAR the DTC. TEST the system for normal operation.<br>**No**<br>INSTALL a new starter relay. For additional information, refer to wiring diagrams. CLEAR the DTC. TEST the system for normal operation. If the DTC is repeated, INSTALL a new ECM.<br>REFER to: Engine Control Module (ECM) (303-14A Electronic Engine Controls - 2.5L NA V6 - AJV6/3.0L NA V6 - AJ27, Removal and Installation).<br>Before replacing a ECM, contact dealer technical support. |

GETtheMANUALS.org

# Electronic Engine Controls - 2.5L NA V6 - AJV6 / 3.0L NA V6 - AJ27 - Electronic Engine ControlsVIN Range: N52048->N80180

Diagnosis and Testing

Overview

There are changes to the engine management system (EMS) for 2006 my, the most obvious of which will be the change to 7-digit diagnostic trouble codes (DTCs) from the familiar 5-digit, plus the addition of secondary air injection and changes to evaporative emissions to comply with stage four emissions requirements.

For more information on these systems,
REFER to: Engine Emission Control - VIN Range: N52207->N99999 (303-08A Engine Emission Control - 2.5L/3.0L/4.2L, Description and Operation) /
Evaporative Emissions - VIN Range: N52207->N99999 (303-13 Evaporative Emissions, Description and Operation).

## Inspection and Verification

1. **1.** Verify the customer concern.
2. **2.** Visually inspect for obvious signs of mechanical or electrical damage.

**Visual Inspection Chart**

| Mechanical | Electrical |
|---|---|
| • Engine oil level and condition<br>• Cooling system coolant level<br>• Fuel level<br>• Fuel contamination/grade/quality<br>• Throttle body<br>• Poly-vee belt<br>• Air cleaner condition | • Fuses<br>• Wiring harness<br>• Electrical connector(s)<br>• Sensor(s)<br>• Engine control module (ECM)<br>• Transmission control module (TCM) |

3. **3.** Verify the following systems are working correctly:

- Air intake system
- Cooling system
- Charging system
- Fuel charging system
- Ignition system

4. **4.** If an obvious cause for an observed or reported symptom is found, correct the cause (if possible) before proceeding to the next step.
5. **5.** If the cause is not visually evident, use the Jaguar approved diagnostic system or a scan tool to retrieve the fault codes before proceeding to the DTC Index, or the symptom chart if no DTCs are set.

## Symptom Chart

| Symptom (general) | Symptom (specific) | Possible source | Action |
|---|---|---|---|
| Non-Start | Engine does not crank | • Security system /Immobiliser engaged<br>• Engine in shut-down mode<br>• ECM relay<br>• Battery<br>• Park/Neutral switch<br>• Starting system<br>• Harness<br>• Engine seized | Check that the security system is disarmed. Check for DTCs. For ECM relay tests, GO to Pinpoint Test AC. For battery information,<br>REFER to: Battery (414-01 Battery, Mounting and Cables, Diagnosis and Testing).<br>For Park/Neutral tests,<br>REFER to: External Controls (307-05 Automatic Transmission/Transaxle External Controls, Diagnosis and Testing).<br>For starting system,<br>REFER to: Starting System (303-06 Starting System, Diagnosis and Testing).<br>For engine information,<br>REFER to: Engine (303-01A Engine - 2.5L/3.0L, Diagnosis and Testing). |
| | Engine cranks, but does not fire | • Engine breather system disconnected/restricted<br>• Ignition system<br>• Fuel system<br>• Harness<br>• Crankshaft position (CKP) sensor<br>• ECM fault | Check the engine breather system,<br>REFER to: Engine Emission Control - VIN Range: N52207->N99999 (303-08A Engine Emission Control - 2.5L/3.0L/4.2L, Diagnosis and Testing).<br>For ignition system tests,<br>REFER to: Engine Ignition - VIN Range: N52207->N99999 (303-07A Engine Ignition - 2.5L/3.0L, Diagnosis and Testing).<br>For fuel system,<br>REFER to: Fuel Charging and Controls - VIN Range: N52207->N99999 (303-04A Fuel Charging and Controls - 2.5L/3.0L, Diagnosis and Testing).<br>For CKP tests, GO to Pinpoint Test Q. Refer to the warranty policy and procedures manual if an ECM is suspect. |
| | Engine cranks and fires, but will not start | • Evaporative emissions purge valve<br>• Fuel pump<br>• Engine coolant temperature (ECT) sensor<br>• Spark plugs<br>• Check for water ingress into spark plug wells<br>• HT short to ground (tracking) - check rubber boots for | For purge valve tests,<br>REFER to: Evaporative Emissions - VIN Range: N52207->N99999 (303-13 Evaporative Emissions, Diagnosis and Testing).<br>For fuel pump circuit tests,<br>REFER to: Fuel Tank and Lines - 2.5L/3.0L/4.2L, VIN Range: N52207->N99999 (310-01 Fuel Tank and Lines, Diagnosis and Testing).<br>For ECT sensor tests, GO to Pinpoint Test C. For ignition system, |

JEFFTheMANUALS.org

| Symptom (general) | Symptom (specific) | Possible source | Action |
|---|---|---|---|
| | | cracks/damage<br>● Ignition coil failure(s)<br>● Harness | REFER to: Engine Ignition - VIN Range: N52207->N99999 (303-07A Engine Ignition - 2.5L/3.0L, Diagnosis and Testing). |
| Difficult to start | Difficult to start cold | ● Coolant anti-freeze content<br>● Battery<br>● CKP sensor<br>● Fuel pump<br>● ECT sensor<br>● Purge valve | Check the coolant anti-freeze content. For battery information,<br>REFER to: Battery (414-01 Battery, Mounting and Cables, Diagnosis and Testing).<br>For CKP sensor tests, GO to Pinpoint Test Q. Check the fuel pressure,<br>REFER to: Fuel Tank and Lines - 2.5L/3.0L/4.2L, VIN Range: N52207->N99999 (310-01 Fuel Tank and Lines, Diagnosis and Testing).<br>For ECT sensor tests, GO to Pinpoint Test C. For purge valve tests,<br>REFER to: Evaporative Emissions - VIN Range: N52207->N99999 (303-13 Evaporative Emissions, Diagnosis and Testing). |
| | Difficult to start hot<br>Difficult to start after hot soak (vehicle standing after engine has reached operating temperature) | ● Injector leak<br>● Engine fuel temperature (EFT) sensor<br>● Intake air temperature (IAT) sensor<br>● Mass air flow (MAF) sensor<br>● Purge valve<br>● Fuel pump<br>● Ignition system<br>● ECT sensor | For injector information,<br>REFER to: Fuel Injectors (303-04A Fuel Charging and Controls - 2.5L/3.0L, Removal and Installation).<br>For EFT sensor tests, GO to Pinpoint Test AE. For IAT sensor tests, GO to Pinpoint Test B. For MAF sensor tests, GO to Pinpoint Test A. For purge valve tests,<br>REFER to: Evaporative Emissions - VIN Range: N52207->N99999 (303-13 Evaporative Emissions, Diagnosis and Testing).<br>For ECT sensor tests, GO to Pinpoint Test C. |
| | Engine cranks too fast/slow | ● Compressions high/low<br>● Battery<br>● Starting system | Check compressions,<br>REFER to: Engine (303-01A Engine - 2.5L/3.0L, Diagnosis and Testing).<br>For battery information,<br>REFER to: Battery (414-01 Battery, Mounting and Cables, Diagnosis and Testing).<br>For starting system,<br>REFER to: Starting System (303-06 Starting System, Diagnosis and Testing). |
| Engine stalls | Engine stalls soon after start | ● Breather system disconnected/restricted<br>● ECM relay<br>● Harness<br>● MAF sensor<br>● ECT sensor<br>● Ignition system<br>● Fuel lines<br>● Fuel rail pressure (FRP) sensor<br>● Air filter restricted<br>● Air leakage | Check the engine breather system,<br>REFER to: Engine Emission Control - VIN Range: N52207->N99999 (303-08A Engine Emission Control - 2.5L/3.0L/4.2L, Diagnosis and Testing).<br>For ECM relay tests, GO to Pinpoint Test AC. For MAF sensor tests, GO to Pinpoint Test A. For ECT sensor tests, GO to Pinpoint Test C. For ignition system tests,<br>REFER to: Engine Ignition - VIN Range: N52207->N99999 (303-07A Engine Ignition - 2.5L/3.0L, Diagnosis and Testing).<br>Check the fuel lines,<br>REFER to: Fuel Tank and Lines - 2.5L/3.0L/4.2L, VIN Range: N52207->N99999 (310-01 Fuel Tank and Lines, Diagnosis and Testing).<br>For FRP sensor tests, GO to Pinpoint Test Y. For air filter and intake system information,<br>REFER to: Intake Air Distribution and Filtering - VIN Range: N52207->N99999 (303-12A Intake Air Distribution and Filtering - 2.5L/3.0L, Diagnosis and Testing). |
| | Engine stalls on overrun | ● ECM relay<br>● Throttle position (TP) sensors | For ECM relay tests, GO to Pinpoint Test AC. For TP sensor tests,GO to Pinpoint Test D. and GO to Pinpoint Test E. |
| | Engine stalls at steady speed | ● ECM relay<br>● CKP sensor<br>● TP sensors<br>● Harness | For ECM relay tests, GO to Pinpoint Test AC. For CKP sensor tests, GO to Pinpoint Test Q. For TP sensor tests, GO to Pinpoint Test D. and GO to Pinpoint Test E. |
| | Engine stalls with speed control enabled | ● ECM relay<br>● Harness | For ECM relay tests, GO to Pinpoint Test AC. |
| | Engine stalls when maneuvering | ● ECM relay<br>● TP sensors<br>● Additional engine loads (PAS, air conditioning, etc)<br>● Transmission malfunction<br>● Controller area network (CAN) network malfunction | For ECM relay tests, GO to Pinpoint Test AC. For TP sensor tests,GO to Pinpoint Test D. and GO to Pinpoint Test E. For accessory drive information,<br>REFER to: Accessory Drive - 2.5L/3.0L/4.2L (303-05 Accessory Drive, Diagnosis and Testing).<br>For transmission information,<br>REFER to: Diagnostic Strategy - VIN Range: N52207->N99999 (307-01 Automatic Transmission/Transaxle, Diagnosis and Testing).<br>For CAN network tests,<br>REFER to: Communications Network - VIN Range: N52207->N99999 (418-00 Module Communications Network, Diagnosis and Testing). |
| Poor driveability | Engine hesitates/poor acceleration | ● Fuel pump<br>● Fuel pressure<br>● Fuel lines<br>● Injector leak<br>● Air leakage<br>● TP sensors<br>● Throttle motor<br>● Ignition system<br>● HO2 sensors | Check the fuel pressure, check the fuel lines,<br>REFER to: Fuel Tank and Lines - 2.5L/3.0L/4.2L, VIN Range: N52207->N99999 (310-01 Fuel Tank and Lines, Diagnosis and Testing).<br>For injector information,<br>REFER to: Fuel Injectors (303-04A Fuel Charging and Controls - 2.5L/3.0L, Removal and Installation).<br>For intake system,<br>REFER to: Intake Air Distribution and Filtering - VIN Range: |

GETtheMANUALS.com

| Symptom (general) | Symptom (specific) | Possible source | Action |
|---|---|---|---|
| | | • Transmission malfunction<br>• Restricted pedal travel (carpet, etc)<br>• Accelerator pedal position (APP) sensor | N52207->N99999 (303-12A Intake Air Distribution and Filtering - 2.5L/3.0L, Diagnosis and Testing).<br>For TP sensor tests, GO to Pinpoint Test D. and GO to Pinpoint Test E. For throttle motor tests, GO to Pinpoint Test X. For ignition system tests,<br>REFER to: Engine Ignition - VIN Range: N52207->N99999 (303-07A Engine Ignition - 2.5L/3.0L, Diagnosis and Testing).<br>Check for DTCs relating to HO2 sensors. Refer to the DTC index for pinpoint tests for DTC set. For transmission information,<br>REFER to: Diagnostic Strategy - VIN Range: N52207->N99999 (307-01 Automatic Transmission/Transaxle, Diagnosis and Testing).<br>Check accelerator pedal travel. For APP sensor tests, GO to Pinpoint Test V. and GO to Pinpoint Test W. |
| | Engine backfires | • Fuel pump<br>• Fuel lines<br>• Air leakage<br>• MAF sensor<br>• HO2 sensors<br>• Ignition system<br>• Sticking variable camshaft timing (VCT) hub<br>• APP sensor | Check the fuel pressure, check the fuel lines,<br>REFER to: Fuel Tank and Lines - 2.5L/3.0L/4.2L, VIN Range: N52207->N99999 (310-01 Fuel Tank and Lines, Diagnosis and Testing).<br>For intake system,<br>REFER to: Intake Air Distribution and Filtering - VIN Range: N52207->N99999 (303-12A Intake Air Distribution and Filtering - 2.5L/3.0L, Diagnosis and Testing).<br>For MAF sensor tests, GO to Pinpoint Test A. Check for DTCs relating to HO2 sensors. Refer to the DTC index for pinpoint tests for DTC set. For ignition system tests,<br>REFER to: Engine Ignition - VIN Range: N52207->N99999 (303-07A Engine Ignition - 2.5L/3.0L, Diagnosis and Testing).<br>For VCT information,<br>REFER to: Variable Camshaft Timing (VCT) Oil Control Solenoid (303-14A Electronic Engine Controls - 2.5L/3.0L, Removal and Installation).<br>For APP sensor tests, GO to Pinpoint Test V. and GO to Pinpoint Test W. |
| | Engine surges | • Fuel pump<br>• Fuel lines<br>• MAF sensor<br>• Harness<br>• TP sensors<br>• Throttle motor<br>• Ignition system | Check the fuel pressure, check the fuel lines,<br>REFER to: Fuel Tank and Lines - 2.5L/3.0L/4.2L, VIN Range: N52207->N99999 (310-01 Fuel Tank and Lines, Diagnosis and Testing).<br>For MAF sensor tests, GO to Pinpoint Test A. For TP sensor tests, GO to Pinpoint Test D. and GO to Pinpoint Test E. For throttle motor tests, GO to Pinpoint Test X. For ignition system tests,<br>REFER to: Engine Ignition - VIN Range: N52207->N99999 (303-07A Engine Ignition - 2.5L/3.0L, Diagnosis and Testing). |
| | Engine detonates/knocks | • Knock sensor (KS)/circuit malfunction<br>• Fuel pump<br>• Fuel lines<br>• Fuel quality<br>• FRP sensor<br>• MAF sensor<br>• HO2 sensors<br>• Air leakage<br>• Sticking VCT hub<br>• BARO sensor malfunction (internal ECM fault) | For KS circuit tests, GO to Pinpoint Test O. and GO to Pinpoint Test P. Check the fuel pressure, check the fuel lines,<br>REFER to: Fuel Tank and Lines - 2.5L/3.0L/4.2L, VIN Range: N52207->N99999 (310-01 Fuel Tank and Lines, Diagnosis and Testing).<br>For FRP sensor tests, GO to Pinpoint Test Y. For MAF sensor tests, GO to Pinpoint Test A. Check for DTCs relating to HO2 sensors. Refer to the DTC index for pinpoint tests for DTC set. For intake system,<br>REFER to: Intake Air Distribution and Filtering - VIN Range: N52207->N99999 (303-12A Intake Air Distribution and Filtering - 2.5L/3.0L, Diagnosis and Testing).<br>Check DTCs for VCT range/performance fault. For VCT information,<br>REFER to: Engine (303-01A Engine - 2.5L/3.0L, Diagnosis and Testing).<br>BARO sensor, refer to the warranty policy and procedures manual if an ECM is suspect. |
| | No throttle response | • APP sensor malfunction<br>• TP sensors<br>• Throttle motor | For APP sensor tests, GO to Pinpoint Test V., and GO to Pinpoint Test W. For TP sensor tests, GO to Pinpoint Test D. and GO to Pinpoint Test E. For throttle motor tests, GO to Pinpoint Test X. |
| | Speed control inhibited or disabled | • Default mode enabled<br>• Speed control switch<br>• TP sensors<br>• Brake pedal switch<br>• Clutch pedal switch<br>• CAN fault | Check the message center for default messages. For speed control switches,<br>REFER to: Speed Control - VIN Range: N52207->N99999 (310-03 Speed Control, Diagnosis and Testing).<br>For TP sensor tests, GO to Pinpoint Test D. and GO to Pinpoint Test E. For brake pedal switch tests, GO to Pinpoint Test AI. For clutch pedal switch tests, GO to Pinpoint Test AK. For CAN tests,<br>REFER to: Communications Network - VIN Range: N52207->N99999 (418-00 Module Communications Network, Diagnosis and Testing). |
| | Poor throttle response | • APP sensor malfunction<br>• TP sensors<br>• ECT sensor<br>• MAF sensor<br>• Transmission malfunction<br>• Traction control event<br>• Air leakage<br>• Breather system disconnected/restricted | For APP sensor tests, GO to Pinpoint Test V. and GO to Pinpoint Test W. For TP sensor tests, GO to Pinpoint Test D. and GO to Pinpoint Test E. For ECT sensor tests, GO to Pinpoint Test C. For MAF sensor tests, GO to Pinpoint Test A. For transmission information,<br>REFER to: Diagnostic Strategy - VIN Range: N52207->N99999 (307-01 Automatic Transmission/Transaxle, Diagnosis and Testing).<br>For intake system, |

CarTheMANUALS.org

| Symptom (general) | Symptom (specific) | Possible source | Action |
|---|---|---|---|
| | | | REFER to: Intake Air Distribution and Filtering - VIN Range: N52207->N99999 (303-12A Intake Air Distribution and Filtering - 2.5L/3.0L, Diagnosis and Testing).<br>For breather system information,<br>REFER to: Engine Emission Control - VIN Range: N52207->N99999 (303-08A Engine Emission Control - 2.5L/3.0L/4.2L, Diagnosis and Testing). |
| | Engine defaults, warning light and messages. | • Park/Neutral switch<br>• TP sensors<br>• MAF sensor<br>• ECT sensor<br>• Harness | For Park/Neutral tests,<br>REFER to: External Controls (307-05 Automatic Transmission/Transaxle External Controls, Diagnosis and Testing).<br>For TP sensor tests, GO to Pinpoint Test D. and GO to Pinpoint Test E. For MAF sensor tests, GO to Pinpoint Test A. For ECT sensor tests, GO to Pinpoint Test C. |

## DTC index

• NOTE: Generic scan tools may not read the codes listed, or may read only 5-digit codes. Match the 5 digits from the scan tool to the first 5 digits of the 7-digit code listed to identify the fault (the last 2 digits give extra information read by the manufacturer-approved diagnostic system).

| DTC | Description | Possible causes | Action |
|---|---|---|---|
| C003100 | Left front wheel speed sensor | • Invalid data received from ABS: left front wheel speed signal | REFER to: Anti-Lock Control - Stability Assist - VIN Range: N52207->N99999 (206-09 Anti-Lock Control - Stability Assist, Diagnosis and Testing). |
| C003400 | Right front wheel speed sensor | • Invalid data received from ABS: right front wheel speed signal | REFER to: Anti-Lock Control - Stability Assist - VIN Range: N52207->N99999 (206-09 Anti-Lock Control - Stability Assist, Diagnosis and Testing). |
| C003700 | Left rear wheel speed sensor | • Invalid data received from ABS: left rear wheel speed signal | REFER to: Anti-Lock Control - Stability Assist - VIN Range: N52207->N99999 (206-09 Anti-Lock Control - Stability Assist, Diagnosis and Testing). |
| C003A00 | Right rear wheel speed sensor | • Invalid data received from ABS: right rear wheel speed signal | REFER to: Anti-Lock Control - Stability Assist - VIN Range: N52207->N99999 (206-09 Anti-Lock Control - Stability Assist, Diagnosis and Testing). |
| P001100 | Intake (A) camshaft position timing - over-advanced (right hand bank) | • Cam timing has not been set up correctly<br>• Timing chain has slipped | Check the engine timing,<br>REFER to: Timing Drive Components (303-01A Engine - 2.5L/3.0L, In-vehicle Repair). |
| P001200 | Intake (A) camshaft position timing - over-retarded (right hand bank) | • Cam timing has not been set up correctly<br>• Timing chain has slipped | Check the engine timing,<br>REFER to: Timing Drive Components (303-01A Engine - 2.5L/3.0L, In-vehicle Repair). |
| P001600 | Crankshaft position (CKP)/Camshaft position (CMP) sensor correlation, right hand bank | • The relative positions of the CKP and CMP teeth are not correct<br>- Sensors incorrectly aligned on rebuild | Reset the sensor positions. REFER to: (303-14A Electronic Engine Controls - 2.5L/3.0L)<br>Camshaft Position (CMP) Sensor LH (Removal and Installation),<br>Camshaft Position (CMP) Sensor RH (Removal and Installation),<br>Crankshaft Position (CKP) Sensor (Removal and Installation). |
| P001800 | Crankshaft position (CKP)/Camshaft position (CMP) sensor correlation, left hand bank | • The relative positions of the CKP and CMP teeth are not correct<br>- Sensors incorrectly aligned on rebuild | Reset the sensor positions. REFER to: (303-14A Electronic Engine Controls - 2.5L/3.0L)<br>Camshaft Position (CMP) Sensor LH (Removal and Installation),<br>Camshaft Position (CMP) Sensor RH (Removal and Installation),<br>Crankshaft Position (CKP) Sensor (Removal and Installation). |
| P002100 | Intake (A) camshaft position timing - over-advanced (left hand bank) | • Cam timing has not been set up correctly<br>• Timing chain has slipped | Check the engine timing,<br>REFER to: Timing Drive Components (303-01A Engine - 2.5L/3.0L, In-vehicle Repair). |
| P002200 | Intake (A) camshaft position timing - over-retarded (left hand bank) | • Cam timing has not been set up correctly<br>• Timing chain has slipped | Check the engine timing,<br>REFER to: Timing Drive Components (303-01A Engine - 2.5L/3.0L, In-vehicle Repair). |
| P002672 | Variable camshaft timing (VCT) control solenoid circuit range/performance (right hand bank) - actuator stuck open | • Oil contamination<br>• VCT oil flow fault<br>• VCT solenoid fault<br>• VCT/Camshaft mechanical failure | For right hand bank VCT solenoid circuit tests, GO to Pinpoint Test AA. |
| P002677 | VCT control solenoid circuit range/performance (right hand bank) - commanded position not reachable | • Oil contamination<br>• VCT oil flow fault<br>• VCT solenoid fault<br>• VCT/Camshaft mechanical failure | For right hand bank VCT solenoid circuit tests, GO to Pinpoint Test AA. |
| P002872 | VCT control solenoid circuit range/performance (left hand bank) - actuator stuck open | • Oil contamination<br>• VCT oil flow fault<br>• VCT solenoid fault<br>• VCT/Camshaft mechanical failure | For left hand bank VCT solenoid circuit tests, GO to Pinpoint Test AB. |
| P002877 | VCT control solenoid circuit range/performance (left hand bank) - commanded position not reachable | • Oil contamination<br>• VCT oil flow fault<br>• VCT solenoid fault<br>• VCT/Camshaft mechanical failure | For left hand bank VCT solenoid circuit tests, GO to Pinpoint Test AB. |

GETtheMANUALS.org

| DTC | Description | Possible causes | Action |
|---|---|---|---|
| P003100 | HO2S heater control circuit low (right hand bank) | • HO2S heater power supply circuit: high resistance<br>• HO2S heater control circuit: high resistance<br>• HO2S heater ground circuit(s) fault<br>• HO2S heater failure | For right hand bank HO2S heater circuit tests, GO to Pinpoint Test G. |
| P003200 | HO2S heater control circuit high (right hand bank) | • HO2S heater power supply circuit: high resistance<br>• HO2S heater control circuit: high resistance<br>• HO2S heater ground circuit(s) fault<br>• HO2S heater failure | For right hand bank HO2S heater circuit tests, GO to Pinpoint Test G. |
| P003600 | Catalyst monitor heater control circuit (right hand bank) | • Catalyst monitor sensor heater control circuit: short circuit to ground<br>• Catalyst monitor sensor heater control circuit: high resistance<br>• Catalyst monitor sensor heater failure | For right hand bank catalyst monitor heater circuit tests, GO to Pinpoint Test I. |
| P005100 | HO2S heater control circuit low (left hand bank) | • HO2S heater power supply circuit: high resistance<br>• HO2S heater control circuit: high resistance<br>• HO2S heater ground circuit(s) fault<br>• HO2S heater failure | For left hand bank HO2S heater circuit tests, GO to Pinpoint Test K. |
| P005200 | HO2S heater control circuit high (left hand bank) | • HO2S heater power supply circuit: high resistance<br>• HO2S heater control circuit: high resistance<br>• HO2S heater ground circuit(s) fault<br>• HO2S heater failure | For left hand bank HO2S heater circuit tests, GO to Pinpoint Test K. |
| P005600 | Catalyst monitor heater control circuit (left hand bank) | • Catalyst monitor sensor heater control circuit: short circuit to ground<br>• Catalyst monitor sensor heater control circuit: high resistance<br>• Catalyst monitor sensor heater failure | For left hand bank catalyst monitor heater circuit tests, GO to Pinpoint Test M. |
| P006900 | Manifold absolute pressure (MAP) - Barometric pressure correlation | • MAP sensor failure<br>• BARO sensor failure (internal ECM fault) | For MAP sensor circuit tests, GO to Pinpoint Test AD. Refer to the warranty policy and procedure manual if an ECM is suspect. |
| P007100 | Ambient air temperature sensor range/performance | • Ambient temperature value missing from CAN bus | REFER to: Control Components (412-04 Control Components, Diagnosis and Testing). |
| P007200 | Ambient air temperature sensor circuit low | • Ambient air temperature sensor circuit: high resistance<br>• Ambient air temperature sensor circuit: short circuit to ground | REFER to: Control Components (412-04 Control Components, Diagnosis and Testing). |
| P007300 | Ambient air temperature sensor circuit high | • Ambient air temperature sensor circuit: short circuit to power | REFER to: Control Components (412-04 Control Components, Diagnosis and Testing). |
| P007500 | Variable camshaft timing (VCT) control circuit (right hand bank) | • VCT solenoid valve disconnected<br>• VCT solenoid valve to ECM PWM drive circuit: high resistance<br>• VCT solenoid failure | For right hand bank VCT solenoid circuit tests, GO to Pinpoint Test AA. |
| P007600 | Variable camshaft timing (VCT) control circuit low (right hand bank) | • VCT solenoid valve disconnected<br>• VCT solenoid valve to ECM PWM drive circuit: short circuit to ground<br>• VCT solenoid failure | For right hand bank VCT solenoid circuit tests, GO to Pinpoint Test AA. |
| P007700 | Variable camshaft timing (VCT) control circuit high (right hand bank) | • VCT solenoid valve disconnected<br>• VCT solenoid valve to ECM PWM drive circuit: short circuit to power<br>• VCT solenoid failure | For right hand bank VCT solenoid circuit tests, GO to Pinpoint Test AA. |
| P008100 | Variable camshaft timing (VCT) control circuit (left hand bank) | • VCT solenoid valve disconnected<br>• VCT solenoid valve to ECM PWM drive circuit: high resistance<br>• VCT solenoid failure | For left hand bank VCT solenoid circuit tests, GO to Pinpoint Test AB. |
| P008200 | Variable camshaft timing (VCT) control circuit low (left hand bank) | • VCT solenoid valve disconnected<br>• VCT solenoid valve to ECM PWM drive circuit: short circuit to ground<br>• VCT solenoid failure | For left hand bank VCT solenoid circuit tests, GO to Pinpoint Test AB. |
| P008300 | Variable camshaft timing (VCT) control circuit high (left hand bank) | • VCT solenoid valve disconnected<br>• VCT solenoid valve to ECM PWM drive circuit: short circuit to power<br>• VCT solenoid failure | For left hand bank VCT solenoid circuit tests, GO to Pinpoint Test AB. |

GETtheMANUALS.org

| DTC | Description | Possible causes | Action |
|---|---|---|---|
| P008700 | Fuel rail/system pressure - too low | • Fuel rail pressure (FRP) sensor disconnected<br>• FRP sensor to ECM sensing circuit: high resistance or short circuit to ground<br>• FRP sensor supply circuit: high resistance<br>• FRP sensor failure<br>• Fuel pump failure<br>• Fuel line leak<br>• Restricted fuel line | For FRP sensor circuit tests, GO to Pinpoint Test Y. Check the fuel pressure, check the fuel lines, REFER to: Fuel Tank and Lines - 2.5L/3.0L/4.2L, VIN Range: N52207->N99999 (310-01 Fuel Tank and Lines, Diagnosis and Testing). |
| P008800 | Fuel rail/system pressure - too high | • FRP sensor to ECM wiring (supply/sense): short circuit to each other<br>• FRP sensor to ECM sense circuit: short circuit to power<br>• FRP sensor ground circuit: high resistance<br>• FRP sensor failure<br>• Restricted fuel line<br>• Fuel pump short circuit to battery | For FRP sensor tests, GO to Pinpoint Test Y. Check the fuel pressure, check the fuel lines, REFER to: Fuel Tank and Lines - 2.5L/3.0L/4.2L, VIN Range: N52207->N99999 (310-01 Fuel Tank and Lines, Diagnosis and Testing). |
| P010100 | Mass or volume air flow A circuit range/performance | • Blocked air cleaner<br>• Air intake leak<br>• Engine breather leak<br>• Mass air flow (MAF) sensor to ECM sensing circuit: high resistance, intermittent short circuit to ground<br>• MAF sensor supply circuit: high resistance<br>• Throttle adaption fault (check throttle position voltage at Ignition ON) | For intake system information, REFER to: Intake Air Distribution and Filtering - VIN Range: N52207->N99999 (303-12A Intake Air Distribution and Filtering - 2.5L/3.0L, Diagnosis and Testing).<br>Check the engine breather system, REFER to: Engine Emission Control - VIN Range: N52207->N99999 (303-08A Engine Emission Control - 2.5L/3.0L/4.2L, Diagnosis and Testing).<br>For MAF sensor circuit tests, GO to Pinpoint Test A. |
| P010200 | Mass or volume air flow A circuit low input | • MAF sensor supply circuit: high resistance, short circuit to ground<br>• MAF sensor failure | For MAF sensor circuit tests, GO to Pinpoint Test A. |
| P010300 | Mass or volume air flow A circuit high input | • MAF sensor to ECM sensing circuit: short circuit to power<br>• MAF sensor to ECM sensor ground circuit: high resistance<br>• MAF sensor failure | For MAF sensor circuit tests, GO to Pinpoint Test A. |
| P010600 | Manifold absolute pressure (MAP)/BARO sensor range/performance | • Intake manifold air leak (loose or missing component)<br>• MAP sensor to ECM circuit(s) fault<br>• Throttle adaption fault (check throttle position voltage at Ignition ON)<br>• MAP sensor failure | For intake system information, REFER to: Intake Air Distribution and Filtering - VIN Range: N52207->N99999 (303-12A Intake Air Distribution and Filtering - 2.5L/3.0L, Diagnosis and Testing).<br>For MAP sensor circuit tests, GO to Pinpoint Test AD. |
| P011123 | Intake air temperature (IAT) sensor circuit range/performance - signal stuck low | • IAT sensor to ECM wiring: high resistance<br>• IAT sensor failure | For IAT sensor circuit tests, GO to Pinpoint Test B. |
| P011124 | IAT sensor circuit range/performance - signal stuck high | • IAT sensor to ECM wiring: high resistance<br>• IAT sensor failure | For IAT sensor circuit tests, GO to Pinpoint Test B. |
| P011129 | IAT sensor circuit range/performance - signal invalid | • IAT sensor to ECM wiring: high resistance<br>• IAT sensor failure | For IAT sensor circuit tests, GO to Pinpoint Test B. |
| P011200 | IAT sensor circuit low input | • IAT sensor disconnected<br>• IAT sensor to ECM wiring: high resistance<br>• IAT sensor failure | For IAT sensor circuit tests, GO to Pinpoint Test B. |
| P011300 | IAT sensor circuit high input | • IAT sensor to ECM wiring: short circuit to ground<br>• IAT sensor to ECM sensing circuit: short circuit to power<br>• IAT sensor failure | For IAT sensor circuit tests, GO to Pinpoint Test B. |
| P011623 | Engine coolant temperature (ECT) sensor circuit range/performance - signal stuck low | • Low coolant level<br>• ECT sensor to ECM sensing circuit: intermittent high resistance<br>• Engine thermostat failure<br>• ECT sensor failure | For ECT sensor circuit tests, GO to Pinpoint Test C. |
| P011624 | ECT sensor circuit range/performance - signal stuck high | • Low coolant level<br>• ECT sensor to ECM sensing circuit: intermittent high resistance<br>• Engine coolant thermostat failure<br>• ECT sensor failure | For ECT sensor circuit tests, GO to Pinpoint Test C. |

GETtheMANUALS.org

| DTC | Description | Possible causes | Action |
|---|---|---|---|
| P011629 | ECT sensor circuit range/performance - signal invalid | • Low coolant level<br>• ECT sensor to ECM sensing circuit: intermittent high resistance<br>• Engine coolant thermostat failure<br>• ECT sensor failure | For ECT sensor circuit tests, GO to Pinpoint Test C. |
| P011700 | ECT sensor circuit low input | • ECT sensor disconnected<br>• ECT sensor to ECM sensing circuit: high resistance, short circuit to power<br>• ECT sensor failure | For ECT sensor circuit tests, GO to Pinpoint Test C. |
| P011800 | ECT sensor 1 circuit high input | • Engine overheat condition/cooling fan failure<br>• ECT sensor to ECM wiring: short circuit to ground<br>• ECT sensor failure | For cooling fan circuit tests, GO to Pinpoint Test T. For ECT sensor circuit tests, GO to Pinpoint Test C. |
| P012100 | Throttle position (TP) sensor circuit range/performance, circuit 1 and 2 | • TP sensor to ECM wiring: high resistance<br>• TP sensor to ECM sensing circuits: (TP 1 or TP 2) short circuit to power<br>• TP sensor failure | For TP sensor circuit 1 tests, GO to Pinpoint Test D. For TP sensor circuit 2 tests, GO to Pinpoint Test E. |
| P012200 | TP sensor circuit 1 low input | • TP sensor to ECM sensing circuit 1: short circuit to ground, high resistance<br>• TP sensor failure | For TP sensor circuit 1 tests, GO to Pinpoint Test D. |
| P012300 | TP sensor circuit 1 low input | • TP sensor to ECM sensing circuit (TP1): short circuit to power<br>• TP sensor failure | For TP sensor circuit 1 tests, GO to Pinpoint Test D. |
| P012500 | Insufficient coolant temp for closed loop fuel control | • Low coolant level<br>• ECT sensor to ECM sensing circuit: intermittent high resistance<br>• Engine thermostat failure<br>• ECT sensor failure | Check the coolant level. For ECT sensor circuit tests, GO to Pinpoint Test C. |
| P012800 | Coolant thermostat (coolant temp below thermostat regulating temperature) | • Contaminated coolant<br>• Engine coolant thermostat failure<br>• ECT sensor failure<br>- ECT sensor DTC may also be flagged | Check the coolant anti-freeze content and condition. Check the thermostat condition and function. Check for ECT sensor DTCs. |
| P01311A | H02 sensor circuit low voltage (right hand bank) | • H02S disconnected<br>• H02S to ECM variable current circuit fault<br>• ECM to HO2S constant current circuit fault<br>• H02S failure | For right hand bank HO2 sensor circuit tests, GO to Pinpoint Test F. and GO to Pinpoint Test G. |
| P01321B | H02 sensor circuit high voltage (right hand bank) | • H02S disconnected<br>• H02S to ECM variable current circuit fault<br>• ECM to HO2S constant current circuit fault<br>• H02S failure | For right hand bank HO2 sensor circuit tests, GO to Pinpoint Test F. and GO to Pinpoint Test G. |
| P013300 | HO2 sensor circuit slow response (right hand bank) | • HO2S to ECM wiring shield high resistance<br>• Exhaust leak<br>• Fuel control system fault<br>• HO2 sensor failure | For right hand bank HO2 sensor circuit tests, GO to Pinpoint Test F. and GO to Pinpoint Test G. |
| P013400 | HO2 sensor circuit no activity detected (right hand bank) | • HO2S slow activation | For right hand bank HO2 sensor circuit tests, GO to Pinpoint Test F. and GO to Pinpoint Test G. |
| P013700 | Catalyst monitor circuit low voltage (right hand bank) | • Catalyst monitor sensor disconnected<br>• Catalyst monitor sensor to ECM wiring: high resistance<br>• Catalyst monitor sensor: short circuit to ground<br>• Catalyst monitor sensor failure | For right hand bank catalyst monitor circuit tests, GO to Pinpoint Test H. and GO to Pinpoint Test I. |
| P013800 | Catalyst monitor circuit high voltage (right hand bank) | • Catalyst monitor sensor sensing circuit: short circuit to power<br>• Catalyst monitor sensor ground braided shield: high resistance<br>• Catalyst monitor sensor failure | For right hand bank catalyst monitor circuit tests, GO to Pinpoint Test H. and GO to Pinpoint Test I. |
| P013900 | Catalyst monitor sensor circuit slow response (right hand bank) | • Catalyst monitor sensor slow response | For right hand bank catalyst monitor circuit tests, GO to Pinpoint Test H. and GO to Pinpoint Test I. |
| P014000 | Catalyst monitor circuit no activity detected (right hand bank) | • Catalyst monitor disconnected<br>• Catalyst monitor mechanical damage<br>• Catalyst monitor to ECM wiring: high resistance<br>• Catalyst monitor sensing circuit: short circuit to power | For right hand bank catalyst monitor circuit tests, GO to Pinpoint Test H. and GO to Pinpoint Test I. |

GETtheMANUALS.org

| DTC | Description | Possible causes | Action |
|---|---|---|---|
| | | • Catalyst monitor: short circuit to ground<br>• Catalyst monitor ground (BRD braided shield) high resistance | |
| P014100 | Catalyst monitor heater circuit (right hand bank) | • Catalyst monitor sensor heater control circuit: high resistance<br>• Catalyst monitor sensor heater failure | For right hand bank catalyst monitor circuit tests, GO to Pinpoint Test H. and GO to Pinpoint Test I. |
| P01511A | H02 sensor circuit low voltage (left hand bank) - circuit resistance below threshold | • HO2 sensing circuit: short circuit to ground, short circuit to power, high resistance<br>• HO2S failure | For left hand bank HO2S circuit tests, GO to Pinpoint Test J. and GO to Pinpoint Test K. |
| P01521B | H02 sensor circuit low voltage (left hand bank) - circuit resistance above threshold | • H02S sensing circuit: short circuit to ground, short circuit to power, high resistance<br>• H02S failure | For left hand bank HO2S circuit tests, GO to Pinpoint Test J. and GO to Pinpoint Test K. |
| P015300 | H02S circuit slow response (left hand bank) | • H02S to ECM wiring shield high resistance<br>• Exhaust leak<br>• Fuel control system fault<br>• H02S failure | For left hand bank HO2S circuit tests, GO to Pinpoint Test J. and GO to Pinpoint Test K. |
| P015400 | H02S circuit no activity detected (left hand bank) | • H02S slow activation | For left hand bank HO2S circuit tests, GO to Pinpoint Test J. and GO to Pinpoint Test K. |
| P015700 | Catalyst monitor sensor circuit low voltage (left hand bank) | • Catalyst monitor sensor disconnected<br>• Catalyst monitor sensor to ECM wiring high resistance<br>• Catalyst monitor sensor short circuit to ground<br>• Fuel control system lean fault<br>• Catalyst monitor sensor failure | For left hand bank catalyst monitor circuit tests, GO to Pinpoint Test L. and GO to Pinpoint Test M. |
| P015800 | Catalyst monitor sensor circuit high voltage (left hand bank) | • Catalyst monitor sensor sensing circuit: short circuit to power<br>• Catalyst monitor sensor ground (BRD braided shield) high resistance<br>• Catalyst monitor sensor failure | For left hand bank catalyst monitor circuit tests, GO to Pinpoint Test L. and GO to Pinpoint Test M. |
| P015900 | Catalyst monitor sensor circuit slow response (left hand bank) | • Catalyst monitor sensor slow response | For left hand bank catalyst monitor circuit tests, GO to Pinpoint Test L. and GO to Pinpoint Test M. |
| P016000 | Catalyst monitor sensor circuit no activity detected (left hand bank) | • Catalyst monitor sensor disconnected<br>• Catalyst monitor sensor mechanical damage<br>• Catalyst monitor sensor to ECM wiring high resistance<br>• Catalyst monitor sensor sensing circuit: short circuit to power<br>• Catalyst monitor sensor short circuit to ground<br>• Catalyst monitor sensor ground (BRD braided shield) high resistance | For left hand bank catalyst monitor circuit tests, GO to Pinpoint Test L. and GO to Pinpoint Test M. |
| P016100 | Catalyst monitor sensor heater circuit (left hand bank) | • Catalyst monitor sensor heater control circuit malfunction | For left hand bank catalyst monitor circuit tests, GO to Pinpoint Test L. and GO to Pinpoint Test M. |
| P017100 | System too lean (right hand bank) | • Air intake leak between MAF sensor and cylinder head<br>• Fuel filter/system restriction<br>• Fuel injector restriction<br>• MAF sensor fault (low intake air flow)<br>• Exhaust leak (before catalyst) | For intake system information,<br>REFER to: Intake Air Distribution and Filtering - VIN Range: N52207->N99999 (303-12A Intake Air Distribution and Filtering - 2.5L/3.0L, Diagnosis and Testing).<br>Check the fuel pressure, check the fuel lines,<br>REFER to: Fuel Tank and Lines - 2.5L/3.0L/4.2L, VIN Range: N52207->N99999 (310-01 Fuel Tank and Lines, Diagnosis and Testing).<br>For fuel injector information,<br>REFER to: Fuel Injectors (303-04A Fuel Charging and Controls - 2.5L/3.0L, Removal and Installation).<br>For MAF sensor circuit tests, GO to Pinpoint Test A. Check the exhaust system (before catalyst) for condition and security,<br>REFER to: Exhaust System - VIN Range: N13089->N99999 (309-00 Exhaust System, Diagnosis and Testing). |
| P017200 | System too rich (right hand bank) | • Restricted air filter<br>• Leaking fuel injector(s)<br>• Oil contaminated with fuel (too many cold starts with vehicle subsequently not getting hot enough for long enough)<br>• MAF sensor fault (high intake air flow) | For intake system information,<br>REFER to: Intake Air Distribution and Filtering - VIN Range: N52207->N99999 (303-12A Intake Air Distribution and Filtering - 2.5L/3.0L, Diagnosis and Testing).<br>For fuel injector information,<br>REFER to: Fuel Injectors (303-04A Fuel Charging and Controls - 2.5L/3.0L, Removal and |

GETmeMANUALS.org

| DTC | Description | Possible causes | Action |
|---|---|---|---|
| | | | Installation).<br>Check the oil condition, if contamination is present, renew the engine oil and filter. For MAF sensor circuit tests, GO to Pinpoint Test A. |
| P017400 | System too lean (left hand bank) | • Air intake leak between MAF sensor and cylinder head<br>• Fuel filter/system restriction<br>• Fuel injector restriction<br>• MAF sensor fault (low intake air flow)<br>• Exhaust leak (before catalyst) | For intake system information,<br>REFER to: Intake Air Distribution and Filtering - VIN Range: N52207->N99999 (303-12A Intake Air Distribution and Filtering - 2.5L/3.0L, Diagnosis and Testing).<br>Check the fuel pressure, check the fuel lines,<br>REFER to: Fuel Tank and Lines - 2.5L/3.0L/4.2L, VIN Range: N52207->N99999 (310-01 Fuel Tank and Lines, Diagnosis and Testing).<br>For fuel injector information,<br>REFER to: Fuel Injectors (303-04A Fuel Charging and Controls - 2.5L/3.0L, Removal and Installation).<br>For MAF sensor circuit tests, GO to Pinpoint Test A. Check the exhaust system (before catalyst) for condition and security,<br>REFER to: Exhaust System - VIN Range: N13089->N99999 (309-00 Exhaust System, Diagnosis and Testing). |
| P017500 | System too rich (left hand bank) | • Restricted air filter<br>• Leaking fuel injector(s)<br>• Oil contaminated with fuel (too many cold starts with vehicle subsequently not getting hot enough for long enough)<br>• MAF sensor fault (high intake air flow) | For intake system information,<br>REFER to: Intake Air Distribution and Filtering - VIN Range: N52207->N99999 (303-12A Intake Air Distribution and Filtering - 2.5L/3.0L, Diagnosis and Testing).<br>For fuel injector information,<br>REFER to: Fuel Injectors (303-04A Fuel Charging and Controls - 2.5L/3.0L, Removal and Installation).<br>Check the oil condition, if contamination is present, renew the engine oil and filter. For MAF sensor circuit tests, GO to Pinpoint Test A. |
| P018123 | Engine fuel temperature (EFT) sensor A circuit range/performance - signal stuck low | • EFT sensor to ECM sensing circuit: high resistance, short circuit to ground, short circuit to power<br>• EFT sensor ground circuit: high resistance<br>• EFT sensor failure | For EFT sensor circuit tests, GO to Pinpoint Test AE. |
| P018124 | EFT sensor circuit range/performance - signal stuck high | • EFT sensor to ECM sensing circuit: high resistance, short circuit to ground, short circuit to power<br>• EFT sensor ground circuit: high resistance<br>• EFT sensor failure | For EFT sensor circuit tests, GO to Pinpoint Test AE. |
| P018129 | EFT sensor A circuit range/performance - signal invalid | • EFT sensor to ECM sensing circuit: high resistance, short circuit to ground, short circuit to power<br>• EFT sensor ground circuit: high resistance<br>• EFT sensor failure | For EFT sensor circuit tests, GO to Pinpoint Test AE. |
| P018200 | EFT sensor circuit low input | • EFT sensor to ECM sensing circuit: short circuit to ground<br>• EFT sensor to splice sensor ground circuit: short circuit<br>• EFT sensor failure | For EFT sensor circuit tests, GO to Pinpoint Test AE. |
| P018300 | EFT sensor circuit high input | • EFT sensor disconnected<br>• EFT sensor to ECM sensing circuit: high resistance, short circuit to power<br>• EFT sensor to splice sensor ground circuit: high resistance<br>• EFT sensor failure | For EFT sensor circuit tests, GO to Pinpoint Test AE. |
| P019100 | FRP sensor circuit range/performance | • FRP sensor range and performance | For FRP sensor circuit tests, GO to Pinpoint Test Y. |
| P019200 | FRP sensor circuit low input | • FRP sensor disconnected<br>• FRP sensor to ECM sensing circuit: high resistance or short circuit to ground<br>• FRP sensor to supply circuit: high resistance<br>• FRP sensor failure | For FRP sensor circuit tests, GO to Pinpoint Test Y. |
| P019300 | FRP sensor circuit high input | • FRP sensor to ECM wiring (supply, sense): short circuit to each other<br>• FRP sensor to ECM sense circuit: short circuit to power<br>• FRP sensor ground circuit: high resistance<br>• FRP sensor failure | For FRP sensor circuit tests, GO to Pinpoint Test Y. |

GETtheMANUALS.org

| DTC | Description | Possible causes | Action |
|---|---|---|---|
| P019623 | Engine oil temperature (EOT) sensor circuit range/performance - signal stuck low | • EOT sensor to ECM sensing circuit: intermittent high resistance<br>• EOT sensor failure | For EOT sensor circuit tests, GO to Pinpoint Test N. |
| P019624 | EOT sensor circuit range/performance - signal stuck high | • EOT sensor to ECM sensing circuit: intermittent high resistance<br>• EOT sensor failure | For EOT sensor circuit tests, GO to Pinpoint Test N. |
| P019629 | EOT sensor circuit range/performance - signal invalid | • EOT sensor to ECM sensing circuit: intermittent high resistance<br>• EOT sensor failure | For EOT sensor circuit tests, GO to Pinpoint Test N. |
| P019700 | EOT sensor circuit low input | • EOT sensor to ECM sensing circuit: short circuit to ground<br>• EOT sensor failure | For EOT sensor circuit tests, GO to Pinpoint Test N. |
| P019800 | EOT sensor circuit high input | • EOT sensor disconnected<br>• EOT sensor to ECM sensing circuit: high resistance, short circuit to power<br>• EOT sensor failure | For EOT sensor circuit tests, GO to Pinpoint Test N. |
| P020100 | Cylinder 1 injector circuit/open | • Injector disconnected<br>• Injector harness wiring: high resistance, short circuit to ground<br>• Injector failure | For injector circuit tests,<br>REFER to: Fuel Charging and Controls - VIN Range: N52207->N99999 (303-04A Fuel Charging and Controls - 2.5L/3.0L, Diagnosis and Testing). |
| P020200 | Cylinder 2 injector circuit/open | • Injector disconnected<br>• Injector harness wiring: high resistance, short circuit to ground<br>• Injector failure | For injector circuit tests,<br>REFER to: Fuel Charging and Controls - VIN Range: N52207->N99999 (303-04A Fuel Charging and Controls - 2.5L/3.0L, Diagnosis and Testing). |
| P020300 | Cylinder 3 injector circuit/open | • Injector disconnected<br>• Injector harness wiring: high resistance, short circuit to ground<br>• Injector failure | For injector circuit tests,<br>REFER to: Fuel Charging and Controls - VIN Range: N52207->N99999 (303-04A Fuel Charging and Controls - 2.5L/3.0L, Diagnosis and Testing). |
| P020400 | Cylinder 4 injector circuit/open | • Injector disconnected<br>• Injector harness wiring: high resistance, short circuit to ground<br>• Injector failure | For injector circuit tests,<br>REFER to: Fuel Charging and Controls - VIN Range: N52207->N99999 (303-04A Fuel Charging and Controls - 2.5L/3.0L, Diagnosis and Testing). |
| P020500 | Cylinder 5 injector circuit/open | • Injector disconnected<br>• Injector harness wiring: high resistance, short circuit to ground<br>• Injector failure | For injector circuit tests,<br>REFER to: Fuel Charging and Controls - VIN Range: N52207->N99999 (303-04A Fuel Charging and Controls - 2.5L/3.0L, Diagnosis and Testing). |
| P020600 | Cylinder 6 injector circuit/open | • Injector disconnected<br>• Injector harness wiring: high resistance, short circuit to ground<br>• Injector failure | For injector circuit tests,<br>REFER to: Fuel Charging and Controls - VIN Range: N52207->N99999 (303-04A Fuel Charging and Controls - 2.5L/3.0L, Diagnosis and Testing). |
| P022200 | TP sensor circuit 2 low input | • TP sensor circuit 2: short circuit to ground<br>• TP sensor circuit 2: high resistance | For TP sensor circuit 2 tests, GO to Pinpoint Test E. |
| P022300 | TP sensor circuit 2 high input | • TP sensor circuit 2: short circuit to power | For TP sensor circuit 2 tests, GO to Pinpoint Test E. |
| P022700 | Accelerator pedal position (APP) sensor circuit 1 low input | • APP sensor circuit 1: short circuit to ground<br>• Accelerator pedal position (APP) sensor circuit 1: high resistance | For APP sensor circuit 1 tests, GO to Pinpoint Test V. |
| P022800 | APP sensor circuit 1 high input | • APP sensor circuit 1: short circuit to power | For APP sensor circuit 1 tests, GO to Pinpoint Test V. |
| P030000 | Random/multiple cylinder misfire detected | • ECM to ignition coil primary circuit faults (cylinder misfire detected DTCs also logged)<br>• Ignition coil failure<br>• Spark plug failure/fouled/incorrect gap<br>• Cylinder compression low<br>• Fuel delivery pressure (low/high)<br>• Fuel injector circuit fault(s) (injector DTCs also logged)<br>• Fuel injectors restricted/leaking<br>• Fuel injectors continuously open<br>• Fuel contamination<br>• Worn camshaft/broken valve springs<br>• Valve clearance adjustment | For ignition coil and spark plug tests,<br>REFER to: Engine Ignition - VIN Range: N52207->N99999 (303-07A Engine Ignition - 2.5L/3.0L, Diagnosis and Testing).<br>Check the cylinder compressions,<br>REFER to: Engine (303-01A Engine - 2.5L/3.0L, Diagnosis and Testing).<br>Check the fuel pressure,<br>REFER to: Fuel Tank and Lines - 2.5L/3.0L/4.2L, VIN Range: N52207->N99999 (310-01 Fuel Tank and Lines, Diagnosis and Testing).<br>For fuel injector circuit tests,<br>REFER to: Fuel Charging and Controls - VIN Range: N52207->N99999 (303-04A Fuel Charging and Controls - 2.5L/3.0L, Diagnosis and Testing).<br>For injector information,<br>REFER to: Fuel Injectors (303-04A Fuel Charging and Controls - 2.5L/3.0L, Removal and Installation).<br>Check the fuel for contamination, grade and quality. For camshaft and valve information,<br>REFER to: Engine (303-01A Engine - 2.5L/3.0L, Diagnosis and Testing). |
| P030100 | Cylinder 1 misfire detected | Refer to P030000 possible sources | Refer to P030000 actions |

GETtheMANUALS.org

| DTC | Description | Possible causes | Action |
|---|---|---|---|
| P030200 | Cylinder 2 misfire detected | Refer to P030000 possible sources | Refer to P030000 actions |
| P030300 | Cylinder 3 misfire detected | Refer to P030000 possible sources | Refer to P030000 actions |
| P030400 | Cylinder 4 misfire detected | Refer to P030000 possible sources | Refer to P030000 actions |
| P030500 | Cylinder 5 misfire detected | Refer to P030000 possible sources | Refer to P030000 actions |
| P030600 | Cylinder 6 misfire detected | Refer to P030000 possible sources | Refer to P030000 actions |
| P031300 | Misfire detected with low fuel | • Misfire detected during low fuel level condition | Check for fuel level sensor codes, add fuel. Clear the DTC and test for normal operation. |
| P031600 | Engine misfire detected on startup | • Misfire detected on first 1000 revs<br>• Refer to P030000 possible sources | Carry out the tests indicated for a normal misfire code, but on a cold engine. |
| P032700 | Knock sensor (KS) 1 circuit low input (right hand bank) | • Poor sensor contact with the cylinder block<br>• KS to ECM sense circuit: short circuit to ground<br>• KS failure | For right hand bank KS circuit tests, GO to Pinpoint Test O. |
| P032800 | KS 1 circuit high input (right hand bank) | • Poor sensor contact with the cylinder block<br>• KS to ECM sense circuit: high resistance, short circuit to power<br>• KS failure | For right hand bank KS circuit tests, GO to Pinpoint Test O. |
| P033200 | KS 2 circuit low input (left hand bank) | • Poor sensor contact with the cylinder block<br>• KS to ECM sense circuit: short circuit to ground<br>• KS failure | For left hand bank KS circuit tests, GO to Pinpoint Test P. |
| P033300 | KS 2 circuit high input (left hand bank) | • Poor sensor contact with the cylinder block<br>• KS to ECM sense circuit: high resistance, short circuit to power<br>• KS failure | For left hand bank KS circuit tests, GO to Pinpoint Test P. |
| P033592 | Crankshaft position (CKP) sensor A circuit - performance or incorrect operation | • CKP sensor disconnected<br>• CKP Sensor gap incorrect/ foreign matter on sensor face /damaged teeth on rotor<br>• CKP sensor sensing circuit: high resistance, short circuit to ground, short circuit to power<br>• CKP sensor failure | For CKP sensor circuit tests, GO to Pinpoint Test Q. |
| P033594 | CKP sensor A circuit - unexpected operation | • CKP sensor disconnected<br>• CKP sensor gap incorrect/ foreign matter on sensor face /damaged teeth on rotor<br>• CKP sensor sensing circuit: high resistance, short circuit to ground, short circuit to power<br>• CKP sensor failure | For CKP sensor circuit tests, GO to Pinpoint Test Q. |
| P033600 | CKP sensor A circuit range/performance | • CKP sensor gap incorrect/ foreign matter on sensor face /damaged teeth on rotor<br>• CKP sensor sensing circuit: intermittent high resistance, short circuit to ground, short circuit to power<br>• CKP sensor failure | For CKP sensor circuit tests, GO to Pinpoint Test Q. |
| P034092 | Camshaft position (CMP) sensor A circuit (right hand bank or single sensor) - performance or incorrect operation | • CMP sensor disconnected<br>• CMP sensor gap incorrect/ foreign matter on sensor face /damaged rotor<br>• CMP sensor sensing circuit: high resistance, short circuit to ground, short circuit to power<br>• CMP sensor 1 failure | For right hand bank CMP circuit tests, GO to Pinpoint Test R. |
| P034094 | CMP sensor A circuit (right hand bank or single sensor) - unexpected operation | • CMP sensor disconnected<br>• CMP sensor gap incorrect/ foreign matter on sensor face /damaged rotor<br>• CMP sensor sensing circuit: high resistance, short circuit to ground, short circuit to power<br>• CMP sensor 1 failure | For right hand bank CMP circuit tests, GO to Pinpoint Test R. |
| P034100 | CMP sensor A circuit range/performance (right hand bank or single sensor) | • CMP sensor disconnected<br>• CMP sensor gap incorrect/ foreign matter on sensor face /damaged rotor<br>• CMP sensor sensing circuit: high resistance, short circuit to ground, short circuit to power<br>• CMP sensor 1 failure | For right hand bank CMP circuit tests, GO to Pinpoint Test R. |

GETtheMANUALS.org

| DTC | Description | Possible causes | Action |
|---|---|---|---|
| P034592 | CMP sensor A circuit (left hand bank) - performance or incorrect operation | • CMP sensor disconnected<br>• CMP sensor gap incorrect/ foreign matter on sensor face /damaged rotor<br>• CMP sensor sensing circuit: high resistance, short circuit to ground, short circuit to power<br>• CMP sensor 2 failure | For left hand bank CMP circuit tests, GO to Pinpoint Test S. |
| P034594 | CMP sensor A circuit (left hand bank) - unexpected operation | • CMP sensor disconnected<br>• CMP sensor gap incorrect/ foreign matter on sensor face /damaged rotor<br>• CMP sensor sensing circuit: high resistance short circuit to ground, short circuit to power<br>• CMP sensor 2 failure | For left hand bank CMP circuit tests, GO to Pinpoint Test S. |
| P034600 | CMP sensor A circuit range/performance (left hand bank) | • CMP sensor disconnected<br>• CMP sensor gap incorrect/ foreign matter on sensor face /damaged rotor<br>• CMP sensor sensing circuit: high resistance, short circuit to ground, short circuit to power<br>• CMP sensor 2 failure | For left hand bank CMP circuit tests, GO to Pinpoint Test S. |
| P035100 | Ignition coil 1 primary/secondary circuit | • ECM to ignition module/coil drive circuit: high resistance, short circuit to ground<br>• Ignition module/coil ground circuit: high resistance<br>• Ignition module/coil power supply circuit: high resistance (including relay, if fitted) | For ignition coil tests,<br>REFER to: Engine Ignition - VIN Range: N52207->N99999 (303-07A Engine Ignition - 2.5L/3.0L, Diagnosis and Testing). |
| P035200 | Ignition coil 2 primary/secondary circuit | • ECM to ignition module/coil drive circuit: short circuit to ground, high resistance<br>• Ignition module/coil ground circuit: high resistance<br>• Ignition module/coil power supply circuit: high resistance (including relay, if fitted) | For ignition coil tests,<br>REFER to: Engine Ignition - VIN Range: N52207->N99999 (303-07A Engine Ignition - 2.5L/3.0L, Diagnosis and Testing). |
| P035300 | Ignition coil 3 primary/secondary circuit | • ECM to ignition module/coil drive circuit: short circuit to ground, high resistance<br>• Ignition module/coil ground circuit: high resistance<br>• Ignition module/coil power supply circuit: high resistance (including relay, if fitted) | For ignition coil tests,<br>REFER to: Engine Ignition - VIN Range: N52207->N99999 (303-07A Engine Ignition - 2.5L/3.0L, Diagnosis and Testing). |
| P035400 | Ignition coil 4 primary/secondary circuit | • ECM to ignition module/coil drive circuit: short circuit to ground, high resistance<br>• Ignition module/coil ground circuit: high resistance<br>• Ignition module/coil power supply circuit: high resistance (including relay, if fitted) | For ignition coil tests,<br>REFER to: Engine Ignition - VIN Range: N52207->N99999 (303-07A Engine Ignition - 2.5L/3.0L, Diagnosis and Testing). |
| P035500 | Ignition coil 5 primary/secondary circuit | • ECM to ignition module/coil drive circuit: short circuit to ground, high resistance<br>• Ignition module/coil ground circuit: high resistance<br>• Ignition module/coil power supply circuit: high resistance (including relay, if fitted) | For ignition coil tests,<br>REFER to: Engine Ignition - VIN Range: N52207->N99999 (303-07A Engine Ignition - 2.5L/3.0L, Diagnosis and Testing). |
| P035600 | Ignition coil 6 primary/secondary circuit | • ECM to ignition module/coil drive circuit: short circuit to ground, high resistance<br>• Ignition module/coil ground circuit: high resistance<br>• Ignition module/coil power supply circuit: high resistance (including relay, if fitted) | For ignition coil tests,<br>REFER to: Engine Ignition - VIN Range: N52207->N99999 (303-07A Engine Ignition - 2.5L/3.0L, Diagnosis and Testing). |
| P041300 | Secondary air injection switching valve A circuit open | • Secondary air check valve control circuit high | For secondary air injection tests,<br>REFER to: Engine Emission Control - VIN Range: N52207->N99999 (303-08A Engine Emission Control - 2.5L/3.0L/4.2L, Diagnosis and Testing). |
| P041400 | Secondary air injection switching valve A circuit shorted | • Secondary air check valve control circuit low | For secondary air injection tests,<br>REFER to: Engine Emission Control - VIN Range: N52207->N99999 (303-08A Engine Emission Control - 2.5L/3.0L/4.2L, Diagnosis and Testing). |

GETtheMANUALS.org

| DTC | Description | Possible causes | Action |
|---|---|---|---|
| P042000 | Catalyst system efficiency below threshold (right hand bank) | • Catalyst failure due to: overheating damage caused by misfire and/or lean combustion<br>• Catalyst failure due to: poisoning caused by excessive oil consumption and/or contaminated fuel | Check the oil and fuel condition/level. Check the catalysts for damage.<br>REFER to: Exhaust System - VIN Range: N13089->N99999 (309-00 Exhaust System, Diagnosis and Testing). |
| P043000 | Catalyst system efficiency below threshold (left hand bank) | • Catalyst failure due to: overheating damage caused by misfire and/or lean combustion<br>• Catalyst failure due to: poisoning caused by excessive oil consumption and/or contaminated fuel | Check the oil and fuel condition/level. Check the catalysts for damage.<br>REFER to: Exhaust System - VIN Range: N13089->N99999 (309-00 Exhaust System, Diagnosis and Testing). |
| P044100 | Evaporative emission system incorrect purge flow | • Purge valve range performance | For evaporative emissions tests,<br>REFER to: Evaporative Emissions - VIN Range: N52207->N99999 (303-13 Evaporative Emissions, Diagnosis and Testing). |
| P044700 | Diagnostic monitoring of fuel tank leakage (DMTL) system change-over valve (COV) control circuit open | • DMTL COV circuit ground short | For evaporative emissions tests,<br>REFER to: Evaporative Emissions - VIN Range: N52207->N99999 (303-13 Evaporative Emissions, Diagnosis and Testing). |
| P044800 | DMTL system COV control circuit shorted | • DMTL COV power supply circuit: high resistance, short circuit<br>• DMTL COV to ECM drive circuit: high resistance, short circuit to power<br>• DMTL COV failure | For evaporative emissions tests,<br>REFER to: Evaporative Emissions - VIN Range: N52207->N99999 (303-13 Evaporative Emissions, Diagnosis and Testing). |
| P045600 | Evaporative emission system leak detected (very small leak) | • DMTL system has detected a leak | For evaporative emissions tests,<br>REFER to: Evaporative Emissions - VIN Range: N52207->N99999 (303-13 Evaporative Emissions, Diagnosis and Testing). |
| P045800 | Evaporative emission system purge control valve circuit low | • Purge valve control circuit: short circuit to ground<br>• Purge valve control circuit: high resistance<br>• Purge valve failure | For evaporative emissions tests,<br>REFER to: Evaporative Emissions - VIN Range: N52207->N99999 (303-13 Evaporative Emissions, Diagnosis and Testing). |
| P045900 | Evaporative emission system purge control valve circuit high | • Purge valve control circuit: short circuit to power | For evaporative emissions tests,<br>REFER to: Evaporative Emissions - VIN Range: N52207->N99999 (303-13 Evaporative Emissions, Diagnosis and Testing). |
| P046129 | Fuel level sensor A circuit range/performance - signal invalid | • Fuel level sensor to rear electronic module (REM) circuits; intermittent short circuit or high resistance<br>• Fuel level sensor failure<br>• REM fault (incorrect fuel level data) | For fuel level sensor circuit tests,<br>REFER to: Fuel Tank and Lines - 2.5L/3.0L/4.2L, VIN Range: N52207->N99999 (310-01 Fuel Tank and Lines, Diagnosis and Testing). |
| P04612F | Fuel level sensor A circuit range/performance - signal erratic | • Fuel level sensor to rear electronic module (REM) circuits; intermittent short circuit or high resistance<br>• Fuel level sensor failure<br>• REM fault (incorrect fuel level data) | For fuel level sensor circuit tests,<br>REFER to: Fuel Tank and Lines - 2.5L/3.0L/4.2L, VIN Range: N52207->N99999 (310-01 Fuel Tank and Lines, Diagnosis and Testing). |
| P046200 | Fuel level sensor A circuit low input | • Fuel level sensor to rear electronic module (REM) circuits; intermittent short circuit to ground or high resistance<br>• Fuel level sensor failure<br>• REM fault (incorrect fuel level data) | For fuel level sensor circuit tests,<br>REFER to: Fuel Tank and Lines - 2.5L/3.0L/4.2L, VIN Range: N52207->N99999 (310-01 Fuel Tank and Lines, Diagnosis and Testing). |
| P046300 | Fuel level sensor A circuit high input | • Fuel level sensor to rear electronic module (REM) circuits; intermittent short circuit to power<br>• Fuel level sensor failure<br>• REM fault (incorrect fuel level data) | For fuel level sensor circuit tests,<br>REFER to: Fuel Tank and Lines - 2.5L/3.0L/4.2L, VIN Range: N52207->N99999 (310-01 Fuel Tank and Lines, Diagnosis and Testing). |
| P048023 | Fan 1 control circuit low | • Electric fan control circuit: short circuit to ground<br>• Electric fan control circuit: high resistance | For cooling fan circuit tests, GO to Pinpoint Test T. |
| P048024 | Fan 1 control circuit high | • Electric fan control circuit: short circuit to battery | For cooling fan circuit tests, GO to Pinpoint Test T. |
| P048309 | Fan rationality check | • Cooling fan difficult to turn<br>• Fan/Motor damaged | Clear any obstruction, replace the fan as necessary. |
| P048316 | Fan rationality check | • Fan control module reports battery voltage less than 9 volts | Check the battery condition. Check the charging system and fan circuits. |
| P048317 | Fan rationality check | • Fan control module reports battery voltage greater than 18 volts | Check the charging system and fan circuits. |
| P048397 | Fan rationality check | • Cooling fan jammed | Clear any obstruction, replace the fan as necessary. |
| P050082 | Vehicle speed sensor malfunction vehicle speed invalid signal received over CAN | • Vehicle speed invalid signal received over CAN | Check for ABS DTCs. |

GETTHEMANUALS.org

| DTC | Description | Possible causes | Action |
|---|---|---|---|
| P050086 | Vehicle speed sensor malfunction vehicle speed invalid signal received over CAN | • Vehicle speed: invalid signal received over CAN | Check for TCM DTCs. |
| P050162 | Vehicle speed sensor A range/performance - signal plausibility failure | • Vehicle speed: range performance | Check for ABS/TCM DTCs. |
| P050400 | Brake switch A/B correlation | • The brake pressure reading does not agree with the brake light switch value | Check the brake switch function. GO to Pinpoint Test AK.<br>REFER to: Anti-Lock Control - Stability Assist - VIN Range: N52207->N99999 (206-09 Anti-Lock Control - Stability Assist, Diagnosis and Testing). |
| P050401 | Brake switch A/B correlation | • Brake switch high fault:<br>- Brake lights stuck on<br>- Gearshift interlock inoperative<br>- Speed control inoperative<br>• Brake switch low fault:<br>- Brake lights inoperative<br>- Gearshift stuck in Park<br>- Reduced engine braking | For brake switch and circuit tests, GO to Pinpoint Test AI. |
| P050600 | Idle air control system RPM lower than expected | • Air intake restriction<br>• Accessory drive overload (defective/seized component) | Check the air intake system.<br>REFER to: Intake Air Distribution and Filtering - VIN Range: N52207->N99999 (303-12A Intake Air Distribution and Filtering - 2.5L/3.0L, Diagnosis and Testing).<br>Check the accessory drive belt and components.<br>REFER to: Accessory Drive Belt - 2.5L/3.0L (303-05 Accessory Drive, Removal and Installation). |
| P050624 | Idle control system RPM lower than expected cold start emission strategy ISC system lower than expected | • Air intake restriction<br>• Accessory drive overload (defective/seized component) | Check the air intake system.<br>REFER to: Intake Air Distribution and Filtering - VIN Range: N52207->N99999 (303-12A Intake Air Distribution and Filtering - 2.5L/3.0L, Diagnosis and Testing).<br>Check the accessory drive belt and components.<br>REFER to: Accessory Drive Belt - 2.5L/3.0L (303-05 Accessory Drive, Removal and Installation). |
| P050700 | Idle air control system RPM higher than expected | • Intake air leak between MAF sensor and throttle<br>• Intake air leak between throttle and engine<br>• Engine crankcase breather leak | Check the air intake system,<br>REFER to: Intake Air Distribution and Filtering - VIN Range: N52207->N99999 (303-12A Intake Air Distribution and Filtering - 2.5L/3.0L, Diagnosis and Testing).<br>Inspect the engine breather system,<br>REFER to: Engine Emission Control - VIN Range: N52207->N99999 (303-08A Engine Emission Control - 2.5L/3.0L/4.2L, Diagnosis and Testing). |
| P050723 | Idle control system RPM higher than expected cold start emission strategy ISC system higher than expected | • Intake air leak between MAF sensor and throttle<br>• Intake air leak between throttle and engine<br>• Engine crankcase breather leak | Check the air intake system,<br>REFER to: Intake Air Distribution and Filtering - VIN Range: N52207->N99999 (303-12A Intake Air Distribution and Filtering - 2.5L/3.0L, Diagnosis and Testing).<br>Inspect the engine breather system,<br>REFER to: Engine Emission Control - VIN Range: N52207->N99999 (303-08A Engine Emission Control - 2.5L/3.0L/4.2L, Diagnosis and Testing). |
| P050B84 | Cold start ignition timing performance | • Cold start emission reduction strategy engine spark timing too retarded | Check for engine ignition related codes.<br>REFER to: Engine Ignition - VIN Range: N52207->N99999 (303-07A Engine Ignition - 2.5L/3.0L, Diagnosis and Testing). |
| P050B85 | Cold start ignition timing performance | • Cold start emission reduction strategy engine spark timing too advanced | Check for engine ignition related codes.<br>REFER to: Engine Ignition - VIN Range: N52207->N99999 (303-07A Engine Ignition - 2.5L/3.0L, Diagnosis and Testing). |
| P05120C | Starter request circuit - circuit voltage above threshold | • Starter relay coil to ECM/ignition switch circuit: short circuit to power<br>• Ignition switch failure | For starter request circuit tests, GO to Pinpoint Test Z. |
| P05120E | Starter request circuit - circuit voltage below threshold | • Starter relay coil to ECM/ignition switch circuit: short circuit to ground<br>• Starter relay coil to ECM/ignition switch circuit: high resistance<br>• Ignition switch failure | For starter request circuit tests, GO to Pinpoint Test Z. |
| P051300 | Incorrect immobilizer key | • Security key invalid | Programme keys using the Jaguar approved diagnostic system. |
| P053200 | Air conditioning (A/C) refrigerant pressure sensor A circuit low input | • A/C refrigerant pressure sensor circuit low input | For A/C pressure sensor tests, GO to Pinpoint Test AF. |
| P053300 | A/C refrigerant pressure sensor A circuit high input | • A/C Refrigerant pressure sensor circuit high input | For A/C pressure sensor tests, GO to Pinpoint Test AF. |
| P056013 | System voltage | • Battery back-up malfunction | For battery back-up tests, GO to Pinpoint Test U. |
| P056100 | System voltage unstable | • System voltage comparison | For FRP sensor tests, GO to Pinpoint Test Y. For MAP sensor tests, GO to Pinpoint Test AD. For TP sensor tests, GO to Pinpoint Test D. and GO to Pinpoint Test E. |

GETtheMANUALS.org

| DTC | Description | Possible causes | Action |
|---|---|---|---|
| P056200 | System voltage low | • ECM to sensors sensor supply voltage circuit(s): short circuit to ground | For FRP sensor tests, GO to Pinpoint Test Y. For MAP sensor tests, GO to Pinpoint Test AD. For TP sensor tests, GO to Pinpoint Test D. and GO to Pinpoint Test E. |
| P056300 | System voltage high | • ECM to sensors supply voltage circuit(s): high resistance, short circuit to power | For FRP sensor tests, GO to Pinpoint Test Y. For MAP sensor tests, GO to Pinpoint Test AD. For TP sensor tests, GO to Pinpoint Test D. and GO to Pinpoint Test E. |
| P057616 | Speed control input circuit low | • Speed control low input | For speed control, REFER to: Speed Control - VIN Range: N52207->N99999 (310-03 Speed Control, Diagnosis and Testing). |
| P057717 | Speed control input circuit high | • Speed control high input | For speed control, REFER to: Speed Control - VIN Range: N52207->N99999 (310-03 Speed Control, Diagnosis and Testing). |
| P057800 | Speed control multi-function input A circuit stuck | • Speed switch stuck fault | For speed control, REFER to: Speed Control - VIN Range: N52207->N99999 (310-03 Speed Control, Diagnosis and Testing). |
| P05791C | Speed control multi-function input A circuit range/performance | • Speed control switch deadband detection | For speed control, REFER to: Speed Control - VIN Range: N52207->N99999 (310-03 Speed Control, Diagnosis and Testing). |
| P060143 | Internal control module memory check sum error - special memory failure | • CPU communication. - sub | Refer to the warranty policy and procedures manual if an ECM is suspect. |
| P060145 | Internal control module memory check sum error - program memory failure | • CPU communication | Refer to the warranty policy and procedures manual if an ECM is suspect. |
| P060442 | Internal control module random access memory (RAM) error - general memory failure | • Initial RAM test | Refer to the warranty policy and procedures manual if an ECM is suspect. |
| P060443 | Internal control module random access memory (RAM) error - special memory failure | • Shut off RAM test | Refer to the warranty policy and procedures manual if an ECM is suspect. |
| P060444 | Internal control module random access memory (RAM) error - data memory failure | • RAM check sum | Refer to the warranty policy and procedures manual if an ECM is suspect. |
| P060445 | Internal control module random access memory (RAM) error - program memory failure | • ECM failure | Refer to the warranty policy and procedures manual if an ECM is suspect. |
| P060500 | Internal Control Module Read Only Memory (ROM) Error | • EEPROM/flash checksum error | Refer to the warranty policy and procedures manual if an ECM is suspect. |
| P060529 | Internal Control Module Read Only Memory (ROM) Error ROM Error | • ROM error | Refer to the warranty policy and procedures manual if an ECM is suspect. |
| P060542 | Internal control module read only memory (ROM) error - general memory failure | • ROM check sum | Refer to the warranty policy and procedures manual if an ECM is suspect. |
| P060543 | Internal control module read only memory (ROM) error - special memory failure | • Shut off ROM test | Refer to the warranty policy and procedures manual if an ECM is suspect. |
| P060544 | Internal control module read only memory (ROM) error - data memory failure | • Initial ROM test | Refer to the warranty policy and procedures manual if an ECM is suspect. |
| P060545 | Internal control module read only memory (ROM) error - program memory failure | • Continuous ROM test | Refer to the warranty policy and procedures manual if an ECM is suspect. |
| P060546 | Internal control module read only memory (ROM) error | • Continuous ROM test | Refer to the warranty policy and procedures manual if an ECM is suspect. |
| P060548 | Internal control module read only memory (ROM) error - supervision software failure | • Shut off ROM test | Refer to the warranty policy and procedures manual if an ECM is suspect. |
| P060564 | Internal control module read only memory (ROM) error | • ROM error - sub | Refer to the warranty policy and procedures manual if an ECM is suspect. |
| P060600 | PCM processor fault | Watchdog error | Refer to the warranty policy and procedures manual if an ECM is suspect. |
| P060601 | ECM/PCM processor - general electrical failure | • Controller test - sub | Refer to the warranty policy and procedures manual if an ECM is suspect. |
| P060604 | ECM/PCM processor | • System internal failures | Refer to the warranty policy and procedures manual if an ECM is suspect. |
| P060605 | ECM/PCM processor - system programming failures | • Throttle return spring failure (throttle body failure) | Refer to the warranty policy and procedures manual if an ECM is suspect. |
| P060641 | ECM/PCM processor - general checksum failure | • Watch dog timer fault - sub | Refer to the warranty policy and procedures manual if an ECM is suspect. |
| P060642 | ECM/PCM processor - general memory failure | • Error Capturing instructions ( ECI) | Refer to the warranty policy and procedures manual if an ECM is suspect. |
| P060643 | ECM/PCM processor - special memory failure | • Duplication memory fault | Refer to the warranty policy and procedures manual if an ECM is suspect. |
| P060644 | ECM/PCM processor - data memory failure | • Duplication memory fault - sub | Refer to the warranty policy and procedures manual if an ECM is suspect. |
| P060645 | ECM/PCM processor - program memory failure | • Detection of write to internal ROM | Refer to the warranty policy and procedures manual if an ECM is suspect. |
| P060646 | ECM/PCM processor - calibration/parameter memory failure | • Detection of write to internal ROM - sub | Configure the module using the Jaguar approved diagnostic system. |
| P060647 | ECM/PCM processor fault | • Watch dog timer fault | Configure the module using the Jaguar approved diagnostic system. |

GETtheMANUALS.org

| DTC | Description | Possible causes | Action |
|---|---|---|---|
| P060648 | ECM/PCM processor - supervision software failure | • Scheduling sequence check | Configure the module using the Jaguar approved diagnostic system. |
| P060649 | ECM/PCM processor - internal electronic failure | • Controller test | Refer to the warranty policy and procedures manual if an ECM is suspect. |
| P060700 | Control module performance | • Sub - CPU watch dog | Refer to the warranty policy and procedures manual if an ECM is suspect. |
| P060A64 | Internal control module monitoring processor performance | • Internal control module monitoring processor performance | Clear the DTC and retest. If the DTC resets, refer to the warranty policy and procedure manual if an ECM is suspect. |
| P060A67 | Internal control module monitoring processor performance | • Internal control module monitoring processor performance | Clear the DTC and retest. If the DTC resets, refer to the warranty policy and procedure manual if an ECM is suspect. |
| P060D00 | Internal control module accelerator pedal position performance | • APP sensor communication | Refer to the warranty policy and procedures manual if an ECM is suspect. |
| P060E62 | Internal control module throttle position performance - signal compare failure | • Throttle motor amplifier failure for valve sensor malfunction | Refer to the warranty policy and procedures manual if an ECM is suspect. |
| P060E64 | Internal control module throttle position performance - signal plausibility failure | • TPS Communication | Refer to the warranty policy and procedures manual if an ECM is suspect. |
| P061043 | Control module vehicle options error | • VID block fault | Configure the module using the Jaguar approved diagnostic system. |
| P06160E | Starter relay circuit low | • Starter relay drive circuit: short circuit to ground<br>• Starter relay drive circuit: high resistance<br>• Starter relay failure | For starter relay tests, GO to Pinpoint Test Z. |
| P06170C | Starter relay circuit high | • Starter relay drive circuit: short circuit to power<br>• Starter relay failure | For starter relay tests, GO to Pinpoint Test Z. |
| P061A00 | Internal control module torque performance | • Pedal follower error | Refer to the warranty policy and procedures manual if an ECM is suspect. |
| P061A29 | Internal control module torque performance - signal invalid | • Absolute engine torque calculation failure - sub-processor | Refer to the warranty policy and procedures manual if an ECM is suspect. |
| P061A64 | Internal control module torque performance - signal plausibility failure | • Absolute engine torque calculation failure | Refer to the warranty policy and procedures manual if an ECM is suspect. |
| P061B29 | Internal control module torque calculation performance - signal invalid | • Absolute and dynamic engine torque calculation failure | Refer to the warranty policy and procedures manual if an ECM is suspect. |
| P061B64 | Internal control module torque calculation performance - signal plausibility failure | • Absolute and dynamic engine torque calculation failure | Refer to the warranty policy and procedures manual if an ECM is suspect. |
| P062700 | Fuel pump A control circuit/open | • Invalid fuel pump duty requested by the ECM | For fuel pump tests,<br>REFER to: Fuel Tank and Lines - 2.5L/3.0L/4.2L, VIN Range: N52207->N99999 (310-01 Fuel Tank and Lines, Diagnosis and Testing). |
| P063000 | VIN Not programmed or incompatible - ECM/PCM | • CCF to CAN VIN mismatch | Configure the module using the Jaguar approved diagnostic system. |
| P064600 | A/C clutch relay control circuit low | • A/C clutch relay control circuit: short circuit to ground<br>• A/C clutch relay control circuit: high resistance | For A/C clutch relay control circuit tests, GO to Pinpoint Test AJ. |
| P064700 | A/C clutch relay control circuit high | • A/C clutch relay control circuit: short circuit to power | For A/C clutch relay control circuit tests, GO to Pinpoint Test AJ. |
| P066100 | Intake manifold tuning (IMT) valve control circuit low, right hand bank | • IMT circuit(s): short circuit to ground<br>• IMT circuit(s): high resistance | For IMT tests, GO to Pinpoint Test AG. |
| P066200 | IMT valve control circuit high, right hand bank | • IMT circuit(s): short circuit to power | For IMT tests, GO to Pinpoint Test AG. |
| P066400 | IMT valve control circuit low, left hand bank | • IMT circuit(s): short circuit to ground<br>• IMT circuit(s): high resistance | For IMT tests, GO to Pinpoint Test AH. |
| P066500 | IMT valve control circuit high, left hand bank | • IMT circuit(s): short circuit to power | For IMT tests, GO to Pinpoint Test AH. |
| P068773 | ECM/PCM power relay control circuit high | • EMS control relay malfunction | For EMS relay tests, GO to Pinpoint Test AC. |
| P072186 | Output speed sensor circuit range/performance | • TCM output shaft speed sensor error received | REFER to: Diagnostic Strategy - VIN Range: N52207->N99999 (307-01 Automatic Transmission/Transaxle, Diagnosis and Testing). |
| P083100 | Clutch pedal switch circuit low | • Clutch pedal switch circuit(s): short circuit to ground<br>• Clutch pedal switch circuit(s): high resistance<br>• Clutch pedal switch fault | For clutch pedal switch circuit tests, GO to Pinpoint Test AK. |
| P083200 | Clutch pedal switch circuit high | • Clutch pedal switch circuit(s): short circuit to power<br>• Clutch pedal switch fault | For clutch pedal switch circuit tests, GO to Pinpoint Test AK. |

GETtheMANUALS.org

| DTC | Description | Possible causes | Action |
|---|---|---|---|
| P08510E | Park/Neutral switch input circuit low | • Park/Neutral switch input circuit low | For Park/Neutral switch tests, REFER to: Diagnostic Strategy - VIN Range: N52207->N99999 (307-01 Automatic Transmission/Transaxle, Diagnosis and Testing). |
| P08520C | Park/Neutral switch input circuit high | • Park/Neutral switch input circuit high | For Park/Neutral switch tests, REFER to: Diagnostic Strategy - VIN Range: N52207->N99999 (307-01 Automatic Transmission/Transaxle, Diagnosis and Testing). |
| P114600 | Generator load low | • Generator - C line circuit low | For generator tests, REFER to: Charging System - 2.5L/3.0L/4.2L (414-00 Charging System - General Information, Diagnosis and Testing). |
| P124400 | Generator load high input (see P062600) | • Generator - C line circuit high | For generator tests, REFER to: Charging System - 2.5L/3.0L/4.2L (414-00 Charging System - General Information, Diagnosis and Testing). |
| P125900 | Immobilizer to PCM signal error | • Incorrect ID received from instrument pack | Configure the system using the Jaguar approved diagnostic system. |
| P131500 | Persistent misfire | • Catalyst damage | Check for associated DTCs and refer to the DTC index. |
| P131600 | Injector driver misfire - emissions damage | • Injector driver module codes detected | Check for associated DTCs and refer to the DTC index. |
| P136700 | Ignition amplifier group A | • Ignition monitoring circuit to ECM: high resistance, short circuit to ground, short circuit to power<br>• Ignition module/coils ground circuit fault, right hand bank | For ignition system tests, REFER to: Engine Ignition - VIN Range: N52207->N99999 (303-07A Engine Ignition - 2.5L/3.0L, Diagnosis and Testing). |
| P136800 | Ignition amplifier group B | • Ignition monitoring circuit to ECM: high resistance, short circuit to ground, short circuit to power<br>• Ignition module/coils ground circuit fault left hand bank | For ignition system tests, REFER to: Engine Ignition - VIN Range: N52207->N99999 (303-07A Engine Ignition - 2.5L/3.0L, Diagnosis and Testing). |
| P160300 | EEPROM error | • ECM fault | Refer to the warranty policy and procedure manual if an ECM is suspect. |
| P162600 | Dynamic torque monitoring error | • ECM electronic throttle monitoring / self test - torque monitoring problem | Refer to the warranty policy and procedure manual if an ECM is suspect. |
| P162900 | Internal voltage regulator | • Generator - F line failure | For generator tests, REFER to: Charging System - 2.5L/3.0L/4.2L (414-00 Charging System - General Information, Diagnosis and Testing). |
| P163200 | Smart alternator faults sensor/circuit | • Generator - L line failure | For generator tests, REFER to: Charging System - 2.5L/3.0L/4.2L (414-00 Charging System - General Information, Diagnosis and Testing). |
| P209600 | Fuel trim too lean, right hand bank | • HO2S fuel adaption - lean | Check for HO2 sensor codes. Check for air intake faults |
| P209700 | Fuel trim too rich, right hand bank | • HO2S fuel adaption - rich | Check for HO2 sensor codes. Check for air intake faults |
| P209800 | Fuel trim too lean, left hand bank | • HO2S fuel adaption - lean | Check for HO2 sensor codes. Check for air intake faults |
| P209900 | Fuel trim too rich, left hand bank | • HO2S fuel adaption - rich | Check for HO2 sensor codes. Check for air intake faults |
| P210129 | Throttle range/performance - sub-processor | • Jammed throttle blade, gearing or motor | Check for a message in the instrument cluster. Replace the throttle body. REFER to: Throttle Body - VIN Range: N52207->N99999 (303-04A Fuel Charging and Controls - 2.5L/3.0L, Removal and Installation). |
| P210162 | Throttle actuator control motor circuit range/performance | • Jammed throttle blade, gearing or motor | Check for a message in the instrument cluster. Replace the throttle body. REFER to: Throttle Body - VIN Range: N52207->N99999 (303-04A Fuel Charging and Controls - 2.5L/3.0L, Removal and Installation). |
| P210164 | Throttle range/performance | • Jammed throttle blade, gearing or motor | Check for a message in the instrument cluster. Replace the throttle body. REFER to: Throttle Body - VIN Range: N52207->N99999 (303-04A Fuel Charging and Controls - 2.5L/3.0L, Removal and Installation). |
| P210177 | Throttle actuator motor control circuit range/performance (commanded position not reachable) | • Throttle blade stuck open<br>• Intake air system leak | Check for throttle related DTCs. Check the intake system for leaks. REFER to: Intake Air Distribution and Filtering - VIN Range: N52207->N99999 (303-12A Intake Air Distribution and Filtering - 2.5L/3.0L, Diagnosis and Testing). |
| P210329 | Throttle actuator motor control circuit high | • Control circuit: short circuit to power<br>• ECM fault | For throttle actuator motor circuit tests, REFER to: Fuel Charging and Controls - VIN Range: N52207->N99999 (303-04A Fuel Charging and Controls - 2.5L/3.0L, Diagnosis and Testing). Refer to the warranty policy and procedures manual if an ECM is suspect. |
| P210364 | Throttle actuator motor control circuit high - signal plausibility failure | • Control circuit: short circuit to power<br>• ECM fault | For throttle actuator motor circuit tests, REFER to: Fuel Charging and Controls - VIN Range: N52207->N99999 (303-04A Fuel Charging and Controls - 2.5L/3.0L, Diagnosis and Testing). Refer to the warranty policy and procedures |

GETtheMANUALS.org

| DTC | Description | Possible causes | Action |
|---|---|---|---|
| | | | manual if an ECM is suspect. |
| P210500 | Throttle actuator control system - forced engine shutdown | • Throttle MIL request due to fuel cut | Check for DTCs indicating the reason for the fuel cut. Follow the action indicated for those DTCs. |
| P210629 | Throttle actuator control system - forced limited power | • Signal invalid | Check for a message in the instrument cluster. Replace the throttle body.<br>REFER to: Throttle Body - VIN Range: N52207->N99999 (303-04A Fuel Charging and Controls - 2.5L/3.0L, Removal and Installation). |
| P210664 | Throttle actuator control system - forced limited power | • Signal plausibility failure | Check for a message in the instrument cluster. Replace the throttle body.<br>REFER to: Throttle Body - VIN Range: N52207->N99999 (303-04A Fuel Charging and Controls - 2.5L/3.0L, Removal and Installation). |
| P211800 | Throttle actuator motor control current range/performance | • Control circuit: short circuit to power, short circuit to ground, high resistance<br>• ECM fault | For throttle actuator motor circuit tests, REFER to: Fuel Charging and Controls - VIN Range: N52207->N99999 (303-04A Fuel Charging and Controls - 2.5L/3.0L, Diagnosis and Testing). Refer to the warranty policy and procedures manual if an ECM is suspect. |
| P211900 | Throttle actuator control throttle body range/performance | • Throttle spring faulty | Check for a message in the instrument cluster. Replace the throttle body.<br>REFER to: Throttle Body - VIN Range: N52207->N99999 (303-04A Fuel Charging and Controls - 2.5L/3.0L, Removal and Installation). |
| P212200 | Accelerator pedal position (APP) sensor D circuit low input | • APP sensor: circuit 2 low input | For APP sensor tests. GO to Pinpoint Test V. and GO to Pinpoint Test W. |
| P212300 | Accelerator pedal position (APP) sensor D circuit high input | • APP sensor: circuit 2 high input | For APP sensor tests. GO to Pinpoint Test V. and GO to Pinpoint Test W. |
| P213528 | Accelerator pedal position (APP) sensor A/B voltage correlation | • APP sensor: incorrect start value (not zero) | Check connections, etc, clear the DTCs and retest. If the code resets, replace the APP sensor. |
| P213529 | Accelerator pedal position (APP) sensor voltage correlation | • APP sensor: excessive difference between raw values of circuit 1 and 2 - sub-processor | Check connections, etc, clear the DTCs and retest. If the code resets, replace the APP sensor. |
| P213562 | Accelerator pedal position (APP) sensor 1 and 2 voltage correlation | • APP sensor: incorrect start value (not zero) sub-processor | Check connections, etc, clear the DTCs and retest. If the code resets, replace the APP sensor. |
| P213564 | Accelerator pedal position (APP) sensor voltage correlation | • APP sensor: excessive difference between raw values of circuit 1 and 2 | Check connections, etc, clear the DTCs and retest. If the code resets, replace the APP sensor. |
| P222800 | Barometric pressure circuit low input | • BARO sensor failure (internal ECM fault) | Refer to the warranty policy and procedures manual if an ECM is suspect. |
| P222900 | Barometric pressure circuit high input | • BARO sensor failure (internal ECM fault) | Refer to the warranty policy and procedures manual if an ECM is suspect. |
| P240100 | Evaporative emission system diagnostic monitoring of tank leakage (DMTL) pump control circuit low | • DMTL pump circuit(s): short circuit to ground | For evaporative emissions tests, REFER to: Evaporative Emissions - VIN Range: N52207->N99999 (303-13 Evaporative Emissions, Diagnosis and Testing). |
| P240200 | Evaporative emission system DMTL pump control circuit high | • DMTL pump circuit(s): short circuit to power | For evaporative emissions tests, REFER to: Evaporative Emissions - VIN Range: N52207->N99999 (303-13 Evaporative Emissions, Diagnosis and Testing). |
| P240429 | Evaporative emission system DMTL pump sense circuit range/performance - signal invalid | • DMTL reference leak<br>• DMTL pump circuit: short circuit, high resistance<br>• DMTL pipework blocked/leaking | For evaporative emissions tests, REFER to: Evaporative Emissions - VIN Range: N52207->N99999 (303-13 Evaporative Emissions, Diagnosis and Testing). |
| P24042F | Evaporative emission system DMTL pump sense circuit range/performance - signal erratic | • DMTL reference leak<br>• DMTL pump circuit: short circuit, high resistance<br>• DMTL pipework blocked/leaking | For evaporative emissions tests, REFER to: Evaporative Emissions - VIN Range: N52207->N99999 (303-13 Evaporative Emissions, Diagnosis and Testing). |
| P240500 | Evaporative emission system DMTL pump sense circuit low | • DMTL pump circuit: short circuit, high resistance | For evaporative emissions tests, REFER to: Evaporative Emissions - VIN Range: N52207->N99999 (303-13 Evaporative Emissions, Diagnosis and Testing). |
| P240600 | Evaporative emission system DMTL pump sense circuit high | • DMTL pump circuit: short circuit, high resistance | For evaporative emissions tests, REFER to: Evaporative Emissions - VIN Range: N52207->N99999 (303-13 Evaporative Emissions, Diagnosis and Testing). |
| P240B00 | Evaporative emission system DMTL pump heater circuit low | • DMTL heater control circuit low | For evaporative emissions tests, REFER to: Evaporative Emissions - VIN Range: N52207->N99999 (303-13 Evaporative Emissions, Diagnosis and Testing). |
| P240C00 | Evaporative emission system DMTL pump heater circuit high | • DMTL heater control circuit high | For evaporative emissions tests, REFER to: Evaporative Emissions - VIN Range: N52207->N99999 (303-13 Evaporative Emissions, Diagnosis and Testing). |
| P243100 | Secondary air injection system air flow/pressure sensor circuit range/performance, right hand bank | • Secondary air injection pump/valve /pipework leaks<br>• Secondary air injection pump<br>• Secondary air injection valve | For secondary air injection tests, REFER to: Engine Emission Control - VIN Range: N52207->N99999 (303-08A Engine Emission Control - 2.5L/3.0L/4.2L, Diagnosis and Testing). |

GETtheMANUALS.org

| DTC | Description | Possible causes | Action |
|---|---|---|---|
| P243200 | Secondary air injection system air flow/pressure sensor circuit low input, right hand bank | • Secondary air injection system MAP sensor circuit low | For secondary air injection tests, REFER to: Engine Emission Control - VIN Range: N52207->N99999 (303-08A Engine Emission Control - 2.5L/3.0L/4.2L, Diagnosis and Testing). |
| P243300 | Secondary air injection system air flow/pressure sensor circuit high input, right hand bank | • Secondary air injection system MAP sensor circuit high | For secondary air injection tests, REFER to: Engine Emission Control - VIN Range: N52207->N99999 (303-08A Engine Emission Control - 2.5L/3.0L/4.2L, Diagnosis and Testing). |
| P244400 | Secondary air injection system pump stuck **ON**, right hand bank | • Secondary air injection system pump control circuit low | For secondary air injection tests, REFER to: Engine Emission Control - VIN Range: N52207->N99999 (303-08A Engine Emission Control - 2.5L/3.0L/4.2L, Diagnosis and Testing). |
| P244500 | Secondary air injection system pump stuck **OFF**, right hand bank | • Secondary air pump control circuit high | For secondary air injection pump circuit tests, REFER to: Engine Emission Control - VIN Range: N52207->N99999 (303-08A Engine Emission Control - 2.5L/3.0L/4.2L, Diagnosis and Testing). |
| P245000 | Evaporative emission (EVAP) system change-over valve (COV) performance/stuck open | • DMTL pump circuit: short circuit, high resistance | For evaporative emissions tests, REFER to: Evaporative Emissions - VIN Range: N52207->N99999 (303-13 Evaporative Emissions, Diagnosis and Testing). |
| P245100 | Evaporative emission control system COV stuck closed | • DMTL pump circuit: short circuit, high resistance | For evaporative emissions tests, REFER to: Evaporative Emissions - VIN Range: N52207->N99999 (303-13 Evaporative Emissions, Diagnosis and Testing). |
| P250300 | Charging system voltage low | • Generator - range/performance - output voltage low when high requested | For charging system tests, REFER to: Charging System - 2.5L/3.0L/4.2L (414-00 Charging System - General Information, Diagnosis and Testing). |
| P250400 | Charging system voltage high | • Generator - range/performance - output voltage high when low requested | For charging system tests, REFER to: Charging System - 2.5L/3.0L/4.2L (414-00 Charging System - General Information, Diagnosis and Testing). |
| P261064 | ECM/PCM Internal engine off timer performance | • ECT sensor fault<br>• Ambient temperature sensor fault<br>• Body processor module fault (time)<br>• CAN error | Check for DTCs indicating a fault with any of the components listed. Follow the action listed for those DTCs. |
| P261087 | ECM/PCM Internal engine off timer performance | • ECT sensor fault<br>• Ambient temperature sensor fault<br>• Body processor module fault (time)<br>• CAN error | Check for DTCs indicating a fault with any of the components listed. Follow the action listed for those DTCs. |
| P263500 | Fuel pump A low flow/performance (fuel pump not activated when requested by ECM) | • ECM to rear electronic module (REM) drive circuit; short circuit, high resistance<br>• Fuel pump module failure<br>• REM failure | For REM to fuel pump module circuit tests, REFER to: Fuel Tank and Lines - 2.5L/3.0L/4.2L, VIN Range: N52207->N99999 (310-01 Fuel Tank and Lines, Diagnosis and Testing). |
| U007300 | Control module communication bus off | • CAN Link circuit malfunction | For network tests, REFER to: Communications Network - VIN Range: N52207->N99999 (418-00 Module Communications Network, Diagnosis and Testing). |
| U010100 | Lost communication with transmission control module | • CAN Link ECM/TCM network malfunction | For network tests, REFER to: Communications Network - VIN Range: N52207->N99999 (418-00 Module Communications Network, Diagnosis and Testing). |
| U010300 | Lost communication with gear shift control module | • CAN Link ECM/gear shift network malfunction | For network tests, REFER to: Communications Network - VIN Range: N52207->N99999 (418-00 Module Communications Network, Diagnosis and Testing). |
| U010400 | Lost communication with speed control module | • CAN Link ECM/ACC module network malfunction | For network tests, REFER to: Communications Network - VIN Range: N52207->N99999 (418-00 Module Communications Network, Diagnosis and Testing). |
| U012100 | Lost communication with anti-lock brake system (ABS) control module | • CAN Link ECM/ABSCM network malfunction | For network tests, REFER to: Communications Network - VIN Range: N52207->N99999 (418-00 Module Communications Network, Diagnosis and Testing). |
| U012800 | Lost communication with park brake control module | • CAN Link ECM/Electric park brake signal missing network malfunction | For network tests, REFER to: Communications Network - VIN Range: N52207->N99999 (418-00 Module Communications Network, Diagnosis and Testing). |
| U015100 | Lost communication with restraints control module | • Lost comms - CAN or hardwired | For network tests, REFER to: Communications Network - VIN Range: N52207->N99999 (418-00 Module Communications Network, Diagnosis and Testing). |
| U015500 | Lost communication with instrument panel cluster (IPC) control module | • CAN Link ECM/INSTCM network malfunction | For network tests, REFER to: Communications Network - VIN Range: N52207->N99999 (418-00 Module Communications Network, Diagnosis and Testing). |

GETtheMANUALS.org

| DTC | Description | Possible causes | Action |
|---|---|---|---|
| U016400 | Lost communication with heating ventilation and air conditioning control module | • CAN Link ECM/HEVAC network malfunction | For network tests, REFER to: Communications Network - VIN Range: N52207->N99999 (418-00 Module Communications Network, Diagnosis and Testing). |
| U016700 | Lost communication with vehicle immobilizer control module | • Security challenge response timeout | Programme the keys using the Jaguar approved diagnostic system. |
| U040264 | Invalid data received From transmission control module | • Actual gear position status | For transmission tests, REFER to: Diagnostic Strategy - VIN Range: N52207->N99999 (307-01 Automatic Transmission/Transaxle, Diagnosis and Testing). |
| U040267 | Invalid data received from transmission control module | • Gear shift position status | For transmission tests, REFER to: Diagnostic Strategy - VIN Range: N52207->N99999 (307-01 Automatic Transmission/Transaxle, Diagnosis and Testing). |
| U040281 | Invalid data received from TCM | • Output shaft speed | For transmission tests, REFER to: Diagnostic Strategy - VIN Range: N52207->N99999 (307-01 Automatic Transmission/Transaxle, Diagnosis and Testing). |
| U041500 | Invalid data received from anti-lock brake system control module | • BPS CAN node | For network tests, REFER to: Communications Network - VIN Range: N52207->N99999 (418-00 Module Communications Network, Diagnosis and Testing). |
| U041564 | Invalid data received from anti-lock brake system control module | • MSR monitoring - plausibility | For network tests, REFER to: Communications Network - VIN Range: N52207->N99999 (418-00 Module Communications Network, Diagnosis and Testing). |
| U041567 | Invalid data received from anti-lock brake system control module | • MSR monitoring - rationality | For network tests, REFER to: Communications Network - VIN Range: N52207->N99999 (418-00 Module Communications Network, Diagnosis and Testing). |
| U042386 | Invalid data received from instrument panel control module - signal invalid | • Battery voltage level | For network tests, REFER to: Communications Network - VIN Range: N52207->N99999 (418-00 Module Communications Network, Diagnosis and Testing). |
| U042481 | Invalid data received from instrument pack control module | • External ambient temp | For network tests, REFER to: Communications Network - VIN Range: N52207->N99999 (418-00 Module Communications Network, Diagnosis and Testing). |
| U042600 | Invalid data received from vehicle immobilizer control module | • Security code mismatch | Configure the module using the Jaguar approved diagnostic system. |
| U206400 | Warning indicator requested by another control module | • Crash event has occurred | For network tests, REFER to: Communications Network - VIN Range: N52207->N99999 (418-00 Module Communications Network, Diagnosis and Testing). |

## Pinpoint Tests

**PINPOINT TEST A : MASS AIR FLOW (MAF) SENSOR CIRCUIT**

CAUTION: When probing connectors to take measurements in the course of the pinpoint tests, use the adaptor kit, part number 3548-1358-00.

• NOTE: When performing electrical voltage or resistance tests, always use a digital multimeter (DMM) accurate to 3 decimal places, and with an up-to-date calibration certificate. When testing resistance, always take the resistance of the DMM leads into account.

• NOTE: Check and rectify basic faults before beginning diagnostic routines involving pinpoint tests.

• NOTE: Before commencing this test, check the air filter for blockage, the engine air intake and breather systems for leaks, and the TP sensor for additional DTCs.

| TEST CONDITIONS | DETAILS/RESULTS/ACTIONS |
|---|---|
| **A1: CHECK THE MAF SENSOR SUPPLY CIRCUIT VOLTAGE** | |
| • NOTE: Check for DTCs indicating IMT valve and purge valve faults before carrying out the MAF supply voltage pinpoint test. | |
| | 1 Disconnect the MAF sensor electrical connector, PI14. |
| | 2 Key on, engine off. |
| | 3 Measure the voltage between: |

| MAF sensor connector PI14, harness side | Battery |
|---|---|
| Pin 01 | Negative terminal |

Is the voltage greater than 10 volts?

**Yes**

GO to A2.

**No**

REPAIR the circuit between the MAF sensor electrical connector and the battery. This circuit includes the EMS control relay and fuse 37 of the front power distribution box. For additional information, refer to the wiring diagrams. CLEAR the DTC and test the system for normal operation.

**A2: CHECK THE MAF SENSOR SENSING CIRCUIT FOR SHORT CIRCUIT TO GROUND**

• NOTE: The short to GROUND may be intermittent. Move the wiring to attempt to reproduce the conditions under which the DTC was logged, and visually inspect the harness for any signs of chafing, see "visual inspection chart".

| | |
|---|---|
| | 1 Key off. |
| | 2 Measure the resistance between: |

| MAF sensor connector PI14, harness side | Battery |
|---|---|
| Pin 03 | Negative terminal |

GETthemANUALS.org

Is the resistance less than 10,000 ohms?

**Yes**

REPAIR the short circuit. For additional information, refer to the wiring diagrams. CLEAR the DTC and test the system for normal operation.

**No**

GO to A3.

**A3: CHECK THE MAF SENSOR SENSING CIRCUIT FOR SHORT CIRCUIT TO POWER**

1 Measure the resistance between:

| MAF sensor connector PI14, harness side | Battery |
|---|---|
| Pin 03 | Positive terminal |

Is the resistance less than 10,000 ohms?

**Yes**

REPAIR the short circuit. For additional information, refer to the wiring diagrams. CLEAR the DTC and test the system for normal operation.

**No**

GO to A4.

**A4: CHECK THE MAF SENSOR GROUND CIRCUIT FOR SHORT CIRCUIT TO POWER**

1 Measure the resistance between:

| MAF sensor connector PI14, harness side | Battery |
|---|---|
| Pin 02 | Positive terminal |

Is the resistance less than 10,000 ohms?

**Yes**

REPAIR the short circuit. For additional information, refer to the wiring diagrams. CLEAR the DTC and test the system for normal operation.

**No**

GO to A5.

**A5: CHECK THE MAF SENSOR SENSING CIRCUIT FOR HIGH RESISTANCE**

1 Disconnect the ECM electrical connector, PI300.

2 Measure the resistance between:

| MAF sensor connector PI14, harness side | ECM connector PI300, harness side |
|---|---|
| Pin 03 | Pin 70 |

Is the resistance greater than 5 ohms?

**Yes**

REPAIR the high resistance circuit. For additional information, refer to the wiring diagrams. CLEAR the DTC and test the system for normal operation.

**No**

GO to A6.

**A6: CHECK THE MAF SENSOR GROUND CIRCUIT FOR HIGH RESISTANCE**

1 Measure the resistance between:

| MAF sensor connector PI14, harness side | ECM connector PI300, harness side |
|---|---|
| Pin 02 | Pin 18 |

Is the resistance greater than 5 ohms?

**Yes**

REPAIR the high resistance circuit. For additional information, refer to the wiring diagrams. CLEAR the DTC and test the system for normal operation.

**No**

INSTALL a new MAF sensor.

REFER to: Mass Air Flow (MAF) Sensor (303-14A Electronic Engine Controls - 2.5L/3.0L, Removal and Installation).

CLEAR the DTC and test the system for normal operation.

## PINPOINT TEST B : INTAKE AIR TEMPERATURE (IAT) SENSOR CIRCUIT

• NOTE: The IAT sensor is integral with the Mass Air Flow sensor.

• NOTE: Before commencing this test, check the air filter for blockage and the engine air intake and breather systems for leaks.

REFER to: Intake Air Distribution and Filtering - VIN Range: N52207->N99999 (303-12A, Diagnosis and Testing).

| TEST CONDITIONS | DETAILS/RESULTS/ACTIONS |
|---|---|

**B1: CHECK THE IAT SENSOR SENSING CIRCUIT FOR SHORT CIRCUIT TO GROUND**

1 Disconnect the MAF sensor electrical connector, PI14.

2 Measure the resistance between:

| MAF sensor connector PI14, harness side | Battery |
|---|---|
| Pin 04 | Negative terminal |

Is the resistance less than 10,000 ohms?

**Yes**

REPAIR the short circuit. For additional information, refer to the wiring diagrams. CLEAR the DTC and test the system for normal operation.

**No**

GO to B2.

**B2: CHECK THE IAT SENSOR SENSING CIRCUIT FOR SHORT CIRCUIT TO POWER**

1 Measure the resistance between:

| MAF sensor connector PI14, harness side | Battery |
|---|---|
| Pin 04 | Positive terminal |

Is the resistance less than 10,000 ohms?

**Yes**

REPAIR the short circuit. For additional information, refer to the wiring diagrams. CLEAR the DTC and test the system for normal operation.

**No**

GO to B3.

**B3: CHECK THE IAT SENSOR SENSING CIRCUIT FOR HIGH RESISTANCE**

1 Disconnect the ECM electrical connector, PI300.

2 Measure the resistance between:

| MAF sensor connector PI14, harness side | ECM connector PI300, harness side |
|---|---|
| Pin 04 | Pin 66 |

GETtheMANUALS.org

Is the resistance greater than 5 ohms?

**Yes**

REPAIR the high resistance circuit. For additional information, refer to the wiring diagrams. CLEAR the DTC and test the system for normal operation.

**No**

GO to B4.

**B4: CHECK THE IAT SENSOR GROUND CIRCUIT FOR HIGH RESISTANCE**

1 Measure the resistance between:

| MAF sensor connector PI14, harness side | ECM connector PI300, harness side |
|---|---|
| Pin 05 | Pin 12 |

Is the resistance greater than 5 ohms?

**Yes**

REPAIR the high resistance circuit. For additional information, refer to the wiring diagrams. CLEAR the DTC and test the system for normal operation.

**No**

INSTALL a new MAF sensor.
REFER to: Mass Air Flow (MAF) Sensor (303-14A Electronic Engine Controls - 2.5L/3.0L, Removal and Installation).
CLEAR the DTC and test the system for normal operation.

## PINPOINT TEST C : ENGINE COOLANT TEMPERATURE (ECT) SENSOR CIRCUIT

• NOTE: Before commencing this test, check the coolant level and condition, check the operation of the thermostat, rectify as necessary.

| TEST CONDITIONS | DETAILS/RESULTS/ACTIONS |
|---|---|

**C1: CHECK THE ECT SENSOR SENSING CIRCUIT FOR SHORT CIRCUIT TO GROUND**

1 Disconnect the ECT sensor electrical connector, PI25.

2 Measure the resistance between:

| ECT sensor connector PI25, harness side | Battery |
|---|---|
| Pin 02 | Negative terminal |

Is the resistance less than 10,000 ohms?

**Yes**

REPAIR the short circuit. For additional information, refer to the wiring diagrams. CLEAR the DTC and test the system for normal operation.

**No**

GO to C2.

**C2: CHECK THE ECT SENSOR SENSING CIRCUIT FOR SHORT CIRCUIT TO POWER**

1 Measure the resistance between:

| ECT sensor connector PI25, harness side | Battery |
|---|---|
| Pin 02 | Positive terminal |

Is the resistance less than 10,000 ohms?

**Yes**

REPAIR the short circuit. For additional information, refer to the wiring diagrams. CLEAR the DTC and test the system for normal operation.

**No**

GO to C3.

**C3: CHECK THE ECT SENSOR SENSING CIRCUIT FOR HIGH RESISTANCE**

1 Disconnect the ECM electrical connector, PI300.

2 Measure the resistance between:

| ECT sensor connector PI25, harness side | ECM connector PI300, harness side |
|---|---|
| Pin 02 | Pin 68 |

Is the resistance greater than 5 ohms?

**Yes**

REPAIR the high resistance circuit. For additional information, refer to the wiring diagrams. CLEAR the DTC and test the system for normal operation.

**No**

GO to C4.

**C4: CHECK THE ECT SENSOR GROUND CIRCUIT FOR HIGH RESISTANCE**

1 Measure the resistance between:

| ECT sensor connector PI25, harness side | ECM connector PI300, harness side |
|---|---|
| Pin 01 | Pin 12 |

Is the resistance greater than 5 ohms?

**Yes**

REPAIR the high resistance circuit. For additional information, refer to the wiring diagrams. CLEAR the DTC and test the system for normal operation.

**No**

INSTALL a new ECT sensor.
REFER to: Engine Coolant Temperature (ECT) Sensor (303-14A Electronic Engine Controls - 2.5L/3.0L, Removal and Installation).
CLEAR the DTC. TEST the system for normal operation.

## PINPOINT TEST D : THROTTLE POSITION (TP) SENSOR 1 CIRCUIT

| TEST CONDITIONS | DETAILS/RESULTS/ACTIONS |
|---|---|

**D1: CHECK THE TP SENSOR SUPPLY CIRCUIT VOLTAGE**

1 Disconnect the TP sensor electrical connector, PI26.

2 Key on, engine off.

3 Measure the voltage between:

| TP sensor connector PI26, harness side | Battery |
|---|---|
| Pin 05 | Negative terminal |

Is the voltage less than 4 volts?

**Yes**

REPAIR the 5 volt supply circuit between the TP sensor and the ECM. For additional information, refer to the wiring diagrams. CLEAR the DTC and test the system for normal operation.

**No**

GO to D2.

GETtheMANUALS.org

**D2: CHECK THE TP SENSOR SUPPLY CIRCUIT FOR SHORT CIRCUIT TO POWER**

1 Key off.

2 Measure the resistance between:

| TP sensor connector PI26, harness side | Battery |
|---|---|
| Pin 05 | Positive terminal |

Is the resistance less than 10,000 ohms?

**Yes**

REPAIR the short circuit. For additional information, refer to the wiring diagrams. CLEAR the DTC and test the system for normal operation.

**No**

GO to D3.

**D3: CHECK THE TP SENSOR SENSING CIRCUIT TP1 FOR SHORT CIRCUIT TO GROUND**

1 Measure the resistance between:

| TP sensor connector PI26, harness side | Battery |
|---|---|
| Pin 06 | Negative terminal |

Is the resistance less than 10,000 ohms?

**Yes**

REPAIR the short circuit. For additional information, refer to the wiring diagrams. CLEAR the DTC and test the system for normal operation.

**No**

GO to D4.

**D4: CHECK THE TP SENSOR SENSING CIRCUIT TP1 FOR SHORT CIRCUIT TO POWER**

1 Measure the resistance between:

| TP sensor connector PI26, harness side | Battery |
|---|---|
| Pin 06 | Positive terminal |

Is the resistance less than 10,000 ohms?

**Yes**

REPAIR the short circuit. For additional information, refer to the wiring diagrams. CLEAR the DTC and test the system for normal operation.

**No**

GO to D5.

**D5: CHECK THE TP SENSOR SENSING CIRCUIT TP1 FOR HIGH RESISTANCE**

1 Disconnect the ECM electrical connector, PI300.

2 Measure the resistance between:

| TP sensor connector PI26, harness side | ECM connector PI300, harness side |
|---|---|
| Pin 06 | Pin 65 |

Is the resistance greater than 5 ohms?

**Yes**

REPAIR the high resistance circuit. For additional information, refer to the wiring diagrams. CLEAR the DTC and test the system for normal operation.

**No**

GO to D6.

**D6: CHECK THE TP SENSOR GROUND CIRCUIT FOR HIGH RESISTANCE**

1 Measure the resistance between:

| TP sensor connector PI26, harness side | ECM connector PI300, harness side |
|---|---|
| Pin 03 | Pin 11 |

Is the resistance greater than 5 ohms?

**Yes**

REPAIR the high resistance circuit. For additional information, refer to the wiring diagrams. CLEAR the DTC and test the system for normal operation.

**No**

INSTALL a new TP sensor.
REFER to: Throttle Body - VIN Range: N52207->N99999 (303-04A Fuel Charging and Controls - 2.5L/3.0L, Removal and Installation).
CLEAR the DTC and test the system for normal operation.

## PINPOINT TEST E : THROTTLE POSITION (TP) SENSOR 2 CIRCUIT

| TEST CONDITIONS | DETAILS/RESULTS/ACTIONS |
|---|---|

**E1: CHECK THE TP SENSOR SUPPLY CIRCUIT VOLTAGE**

1 Disconnect the TP sensor electrical connector, PI26.

2 Key on, engine off.

3 Measure the voltage between:

| TP sensor connector PI26, harness side | Battery |
|---|---|
| Pin 05 | Negative terminal |

Is the voltage less than 4 volts?

**Yes**

REPAIR the 5 volt supply circuit between the TP sensor and the ECM. For additional information, refer to the wiring diagrams. CLEAR the DTC and test the system for normal operation.

**No**

GO to E2.

**E2: CHECK THE TP SENSOR SUPPLY CIRCUIT FOR SHORT CIRCUIT TO POWER**

1 Key off.

2 Measure the resistance between:

| TP sensor connector PI26, harness side | Battery |
|---|---|
| Pin 05 | Positive terminal |

Is the resistance less than 10,000 ohms?

**Yes**

REPAIR the short circuit. For additional information, refer to the wiring diagrams. CLEAR the DTC and test the system for normal operation.

**No**

GO to E3.

**E3: CHECK THE TP SENSOR SENSING CIRCUIT TP2 FOR SHORT CIRCUIT TO GROUND**

1 Measure the resistance between:

| TP sensor connector PI26, harness side | Battery |
|---|---|
| Pin 04 | Negative terminal |

GETtheMANUALS.org

Is the resistance less than 10,000 ohms?

**Yes**

REPAIR the short circuit. For additional information, refer to the wiring diagrams. CLEAR the DTC and test the system for normal operation.

**No**

GO to E4.

**E4: CHECK THE TP SENSOR SENSING CIRCUIT TP2 FOR SHORT CIRCUIT TO POWER**

1 Measure the resistance between:

| TP sensor connector PI26, harness side | Battery |
|---|---|
| Pin 04 | Positive terminal |

Is the resistance less than 10,000 ohms?

**Yes**

REPAIR the short circuit. For additional information, refer to the wiring diagrams. CLEAR the DTC and test the system for normal operation.

**No**

GO to E5.

**E5: CHECK THE TP SENSOR SENSING CIRCUIT TP2 FOR HIGH RESISTANCE**

1 Disconnect the ECM electrical connector, PI300.

2 Measure the resistance between:

| TP sensor connector PI26, harness side | ECM connector PI300, harness side |
|---|---|
| Pin 04 | Pin 67 |

Is the resistance greater than 5 ohms?

**Yes**

REPAIR the high resistance circuit. For additional information, refer to the wiring diagrams. CLEAR the DTC and test the system for normal operation.

**No**

GO to E6.

**E6: CHECK THE TP SENSOR GROUND CIRCUIT FOR HIGH RESISTANCE**

1 Measure the resistance between:

| TP sensor connector PI26, harness side | ECM connector PI300, harness side |
|---|---|
| Pin 03 | Pin 11 |

Is the resistance greater than 5 ohms?

**Yes**

REPAIR the high resistance circuit. For additional information, refer to the wiring diagrams. CLEAR the DTC and test the system for normal operation.

**No**

INSTALL a new TP sensor.

REFER to: Throttle Body - VIN Range: N52207->N99999 (303-04A Fuel Charging and Controls - 2.5L/3.0L, Removal and Installation).

CLEAR the DTC and test the system for normal operation.

## PINPOINT TEST F : RIGHT-HAND H02S VARIABLE AND CONSTANT CIRCUITS

CAUTION: Under no circumstances must the sensor wiring be cut to facilitate removal, should this prove necessary.

• NOTE: Before commencing this test, check the sensor connections and harness, check for exhaust leaks, (a very small exhaust leak can cause this DTC to flag). See "visual inspection chart" and "possible causes".

| TEST CONDITIONS | DETAILS/RESULTS/ACTIONS |
|---|---|

**F1: CHECK THE H02S VARIABLE CIRCUIT FOR SHORT CIRCUIT TO GROUND**

1 Disconnect the H02S electrical connector, PI10.

2 Measure the resistance between:

| H02S connector PI10, harness side | Battery |
|---|---|
| Pin 04 | Negative terminal |

Is the resistance less than 10,000 ohms?

**Yes**

REPAIR the short circuit. For additional information, refer to the wiring diagrams. CLEAR the DTC and test the system for normal operation.

**No**

GO to F2.

**F2: CHECK THE H02S VARIABLE CIRCUIT FOR SHORT CIRCUIT TO POWER**

1 Measure the resistance between:

| H02S connector PI10, harness side | Battery |
|---|---|
| Pin 04 | Positive terminal |

Is the resistance less than 10,000 ohms?

**Yes**

REPAIR the short circuit. For additional information, refer to the wiring diagrams. CLEAR the DTC and test the system for normal operation.

**No**

GO to F3.

**F3: CHECK THE H02S CONSTANT CIRCUIT FOR SHORT CIRCUIT TO GROUND**

1 Measure the resistance between:

| H02S connector PI10, harness side | Battery |
|---|---|
| Pin 03 | Negative terminal |

Is the resistance less than 10,000 ohms?

**Yes**

REPAIR the short circuit. For additional information, refer to the wiring diagrams. CLEAR the DTC and test the system for normal operation.

**No**

GO to F4.

**F4: CHECK THE H02S CONSTANT CIRCUIT FOR SHORT CIRCUIT TO POWER**

1 Measure the resistance between:

| H02S connector PI10, harness side | Battery |
|---|---|
| Pin 03 | Positive terminal |

Is the resistance less than 10,000 ohms?

**Yes**

REPAIR the short circuit. For additional information, refer to the wiring diagrams. CLEAR the DTC and test the system for normal operation.

GETtheMANUALS.org

**No**
GO to F5.

**F5: CHECK THE H02S VARIABLE CIRCUIT FOR HIGH RESISTANCE**

1. Disconnect the ECM electrical connector, PI300.
2. Measure the resistance between:

| H02S connector PI10, harness side | ECM connector PI300, harness side |
|---|---|
| Pin 04 | Pin 28 |

Is the resistance greater than 5 ohms?

**Yes**
REPAIR the high resistance circuit. For additional information, refer to the wiring diagrams. CLEAR the DTC and test the system for normal operation.

**No**
GO to F6.

**F6: CHECK THE H02S CONSTANT CIRCUIT FOR HIGH RESISTANCE**

1. Measure the resistance between:

| H02S connector PI10, harness side | ECM connector PI300, harness side |
|---|---|
| Pin 03 | Pin 29 |

Is the resistance greater than 5 ohms?

**Yes**
REPAIR the high resistance circuit. For additional information, refer to the wiring diagrams. CLEAR the DTC and test the system for normal operation.

**No**
INSTALL a new H02S.
REFER to: Heated Oxygen Sensor (HO2S) (303-14A Electronic Engine Controls - 2.5L/3.0L, Removal and Installation).
CLEAR the DTC and test the system for normal operation.

## PINPOINT TEST G : RIGHT-HAND H02S HEATER SUPPLY AND CONTROL CIRCUITS

CAUTION: Under no circumstances must the sensor wiring be cut to facilitate removal, should this prove necessary.

• NOTE: Carry out a visual inspection of the HO2S connectors (integrity of connections may be affected by heat from catalytic converters).

| TEST CONDITIONS | DETAILS/RESULTS/ACTIONS |
|---|---|

**G1: CHECK H02S HEATER POWER SUPPLY CIRCUIT**

1. Disconnect the H02S electrical connector, PI10.
2. Key on, engine off.
3. Make sure the O2S heater relay is engergized.
4. Measure the voltage between:

| H02S connector PI10, harness side | Battery |
|---|---|
| Pin 01 | Negative terminal |

Is the voltage greater than 10 volts?

**Yes**
GO to G2.

**No**
REPAIR the power supply circuit to the H02S heater. This circuit includes the O2S heater relay and fuse 20 of the front power distribution box. For additional information, refer to the wiring diagrams. CLEAR the DTC and test the system for normal operation.

**G2: CHECK H02S HEATER CONTROL CIRCUIT FROM ECM FOR SHORT CIRCUIT TO GROUND**

1. Key off.
2. Measure the resistance between:

| H02S connector PI10, harness side | Battery |
|---|---|
| Pin 02 | Negative terminal |

Is the resistance less than 10,000 ohms?

**Yes**
REPAIR the short circuit. For additional information, refer to the wiring diagrams. CLEAR the DTC and test the system for normal operation.

**No**
GO to G3.

**G3: CHECK H02S HEATER CONTROL CIRCUIT FROM ECM FOR SHORT CIRCUIT TO POWER**

1. Measure the resistance between:

| H02S connector PI10, harness side | Battery |
|---|---|
| Pin 02 | Positive terminal |

Is the resistance less than 10,000 ohms?

**Yes**
REPAIR the short circuit. For additional information, refer to the wiring diagrams. CLEAR the DTC and test the system for normal operation.

**No**
GO to G4.

**G4: CHECK H02S HEATER CONTROL CIRCUIT FROM ECM FOR HIGH RESISTANCE**

1. Disconnect the ECM electrical connector, PI300.
2. Measure the resistance between:

| H02S connector PI10, harness side | ECM connector PI300, harness side |
|---|---|
| Pin 02 | Pin 76 |

Is the resistance greater than 5 ohms?

**Yes**
REPAIR the high resistance circuit. For additional information, refer to the wiring diagrams. CLEAR the DTC and test the system for normal operation.

**No**
INSTALL a new H02S.
REFER to: Heated Oxygen Sensor (HO2S) (303-14A Electronic Engine Controls - 2.5L/3.0L, Removal and Installation).
CLEAR the DTC and test the system for normal operation.

## PINPOINT TEST H : RIGHT-HAND CATALYST MONITOR SENSOR SENSING AND GROUND CIRCUITS

GETtheMANUALS.org

CAUTION: Under no circumstances must the sensor wiring be cut to facilitate removal, should this prove necessary.

| TEST CONDITIONS | DETAILS/RESULTS/ACTIONS |
|---|---|

**H1: CHECK THE CATALYST MONITOR SENSOR SENSING CIRCUIT FOR SHORT CIRCUIT TO GROUND**

1. Disconnect the catalyst monitor electrical connector, PI11.
2. Measure the resistance between:

| Catalyst monitor connector PI11, harness side | Battery |
|---|---|
| Pin 04 | Negative terminal |

Is the resistance less than 10,000 ohms?

**Yes**
REPAIR the short circuit. For additional information, refer to the wiring diagrams. CLEAR the DTC and test the system for normal operation.

**No**
GO to H2.

**H2: CHECK THE CATALYST MONITOR SENSOR SENSING CIRCUIT FOR SHORT CIRCUIT TO POWER**

1. Measure the resistance between:

| Catalyst monitor connector PI11, harness side | Battery |
|---|---|
| Pin 04 | Positive terminal |

Is the resistance less than 10,000 ohms?

**Yes**
REPAIR the short circuit. For additional information, refer to the wiring diagrams. CLEAR the DTC and test the system for normal operation.

**No**
GO to H3.

**H3: CHECK THE CATALYST MONITOR SENSOR SENSING CIRCUIT FOR HIGH RESISTANCE**

1. Disconnect the ECM electrical connector, PI300.
2. Measure the resistance between:

| Catalyst monitor connector PI11, harness side | ECM connector PI300, harness side |
|---|---|
| Pin 04 | Pin 40 |

Is the resistance greater than 5 ohms?

**Yes**
REPAIR the high resistance circuit. For additional information, refer to the wiring diagrams. CLEAR the DTC and test the system for normal operation.

**No**
GO to H4.

**H4: CHECK THE CATALYST MONITOR SENSOR GROUND CIRCUIT FOR HIGH RESISTANCE**

1. Measure the resistance between:

| Catalyst monitor connector PI11, harness side | ECM connector PI300, harness side |
|---|---|
| Pin 03 | Pin 22 |

Is the resistance greater than 5 ohms?

**Yes**
REPAIR the high resistance circuit. For additional information, refer to the wiring diagrams. CLEAR the DTC and test the system for normal operation.

**No**
INSTALL a new catalyst monitor sensor.
REFER to: Catalyst Monitor Sensor (303-14A Electronic Engine Controls - 2.5L/3.0L, Removal and Installation).
CLEAR the DTC and test the system for normal operation.

## PINPOINT TEST I : RIGHT-HAND CATALYST MONITOR SENSOR SUPPLY AND HEATER CONTROL CIRCUITS

CAUTION: Under no circumstances must the sensor wiring be cut to facilitate removal, should this prove necessary.

• NOTE: Carry out a visual inspection of the HO2S connectors (integrity of connections may be affected by heat from catalytic converters).

| TEST CONDITIONS | DETAILS/RESULTS/ACTIONS |
|---|---|

**I1: CHECK THE CATALYST MONITOR HEATER POWER SUPPLY CIRCUIT**

1. Disconnect the catalyst monitor sensor electrical connector, PI11.
2. Key on, engine off.
3. Make sure the O2S heater relay is energized.
4. Measure the voltage between:

| Catalyst monitor connector PI11, harness side | Battery |
|---|---|
| Pin 01 | Negative terminal |

Is the voltage greater than 10 volts?

**Yes**
GO to I2.

**No**
REPAIR the power supply circuit to the catalyst monitor heater. This circuit includes the O2S heater relay and fuse 20 of the front power distribution box. For additional information, refer to the wiring diagrams. CLEAR the DTC and test the system for normal operation.

**I2: CHECK THE CATALYST MONITOR HEATER CONTROL CIRCUIT FOR SHORT CIRCUIT TO GROUND**

1. Key off.
2. Measure the resistance between:

| Catalyst monitor connector PI11, harness side | Battery |
|---|---|
| Pin 02 | Negative terminal |

Is the resistance less than 10,000 ohms?

**Yes**
REPAIR the short circuit. For additional information, refer to the wiring diagrams. CLEAR the DTC and test the system for normal operation.

**No**
GO to I3.

**I3: CHECK THE CATALYST MONITOR HEATER CONTROL CIRCUIT FOR SHORT CIRCUIT TO POWER**

1. Measure the resistance between:

| Catalyst monitor connector PI11, harness side | Battery |
|---|---|
| Pin 02 | Positive terminal |

GETtheMANUALS.org

Is the resistance less than 10,000 ohms?

**Yes**

REPAIR the short circuit. For additional information, refer to the wiring diagrams. CLEAR the DTC and test the system for normal operation.

**No**

GO to I4.

**I4: CHECK THE CATALYST MONITOR HEATER CONTROL CIRCUIT FOR HIGH RESISTANCE**

1. Disconnect the ECM electrical connector, PI300.
2. Measure the resistance between:

| Catalyst monitor connector PI11, harness side | ECM connector PI300, harness side |
|---|---|
| Pin 02 | Pin 88 |

Is the resistance greater than 5 ohms?

**Yes**

REPAIR the high resistance circuit. For additional information, refer to the wiring diagrams. CLEAR the DTC and test the system for normal operation.

**No**

INSTALL a new catalyst monitor sensor.
REFER to: Catalyst Monitor Sensor (303-14A Electronic Engine Controls - 2.5L/3.0L, Removal and Installation).
CLEAR the DTC and test the system for normal operation. If the DTC is repeated, refer to the warranty policy and procedures manual if an ECM is suspect.

## PINPOINT TEST J : LEFT-HAND H02S VARIABLE AND CONSTANT CIRCUITS

CAUTION: Under no circumstances must the sensor wiring be cut to facilitate removal, should this prove necessary.

• NOTE: Before commencing this test, check the sensor connections and harness, check for exhaust leaks, (a very small exhaust leak can cause this DTC to flag). See "visual inspection chart" and "possible causes".

| TEST CONDITIONS | DETAILS/RESULTS/ACTIONS |
|---|---|

**J1: CHECK THE H02S VARIABLE CIRCUIT FOR SHORT CIRCUIT TO GROUND**

1. Disconnect the H02S electrical connector, PI12.
2. Measure the resistance between:

| H02S connector PI12, harness side | Battery |
|---|---|
| Pin 04 | Negative terminal |

Is the resistance less than 10,000 ohms?

**Yes**

REPAIR the short circuit. For additional information, refer to the wiring diagrams. CLEAR the DTC and test the system for normal operation.

**No**

GO to J2.

**J2: CHECK THE H02S VARIABLE CIRCUIT FOR SHORT TO CIRCUIT TO POWER**

1. Measure the resistance between:

| H02S connector PI12, harness side | Battery |
|---|---|
| Pin 04 | Positive terminal |

Is the resistance less than 10,000 ohms?

**Yes**

REPAIR the short circuit. For additional information, refer to the wiring diagrams. CLEAR the DTC and test the system for normal operation.

**No**

GO to J3.

**J3: CHECK THE H02S CONSTANT CIRCUIT FOR SHORT CIRCUIT TO GROUND**

1. Measure the resistance between:

| H02S connector PI12, harness side | Battery |
|---|---|
| Pin 03 | Negative terminal |

Is the resistance less than 10,000 ohms?

**Yes**

REPAIR the short circuit. For additional information, refer to the wiring diagrams. CLEAR the DTC and test the system for normal operation.

**No**

GO to J4.

**J4: CHECK THE H02S CONSTANT CIRCUIT FOR SHORT TO CIRCUIT TO POWER**

1. Measure the resistance between:

| H02S connector PI12, harness side | Battery |
|---|---|
| Pin 03 | Positive terminal |

Is the resistance less than 10,000 ohms?

**Yes**

REPAIR the short circuit. For additional information, refer to the wiring diagrams. CLEAR the DTC and test the system for normal operation.

**No**

GO to J5.

**J5: CHECK THE H02S VARIABLE CIRCUIT FOR HIGH RESISTANCE**

1. Disconnect the ECM electrical connector, PI300.
2. Measure the resistance between:

| H02S connector PI12, harness side | ECM connector PI300, harness side |
|---|---|
| Pin 04 | Pin 26 |

Is the resistance greater than 5 ohms?

**Yes**

REPAIR the high resistance circuit. For additional information, refer to the wiring diagrams. CLEAR the DTC and test the system for normal operation.

**No**

GO to J6.

**J6: CHECK THE H02S CONSTANT CIRCUIT FOR HIGH RESISTANCE**

1. Measure the resistance between:

| H02S connector PI12, harness side | ECM connector PI300, harness side |
|---|---|
| Pin 03 | Pin 27 |

GETtheMANUALS.org

| | |
|---|---|
| | Is the resistance greater than 5 ohms?<br>**Yes**<br>REPAIR the high resistance circuit. For additional information, refer to the wiring diagrams. CLEAR the DTC and test the system for normal operation.<br>**No**<br>INSTALL a new H02S.<br>REFER to: Heated Oxygen Sensor (HO2S) (303-14A Electronic Engine Controls - 2.5L/3.0L, Removal and Installation).<br>CLEAR the DTC and test the system for normal operation. If the DTC is repeated, refer to the warranty policy and procedures manual if an ECM is suspect. |

## PINPOINT TEST K : LEFT-HAND H02S HEATER SUPPLY AND CONTROL CIRCUITS

CAUTION: Under no circumstances must the sensor wiring be cut to facilitate removal, should this prove necessary.

• NOTE: Carry out a visual inspection of the HO2S connectors (integrity of connections may be affected by heat from catalytic converters).

| TEST CONDITIONS | DETAILS/RESULTS/ACTIONS |
|---|---|
| **K1: CHECK H02S HEATER POWER SUPPLY CIRCUIT** | |
| | 1 Disconnect the H02S electrical connector, PI12. |
| | 2 Key on, engine off. |
| | 3 Make sure the O2S heater relay is energized. |
| | 4 Measure the voltage between: |

| H02S connector PI12, harness side | Battery |
|---|---|
| Pin 01 | Negative terminal |

| | |
|---|---|
| | Is the voltage greater than 10 volts?<br>**Yes**<br>GO to K2.<br>**No**<br>REPAIR the power supply circuit to the H02S heater. This circuit includes the O2S heater relay and fuse 35 of the front power distribution box. For additional information, refer to the wiring diagrams. CLEAR the DTC and test the system for normal operation. |
| **K2: CHECK H02S HEATER CONTROL CIRCUIT FROM ECM FOR SHORT CIRCUIT TO GROUND** | |
| | 1 Key off. |
| | 2 Measure the resistance between: |

| H02S connector PI12, harness side | Battery |
|---|---|
| Pin 02 | Negative terminal |

| | |
|---|---|
| | Is the resistance less than 10,000 ohms?<br>**Yes**<br>REPAIR the short circuit. For additional information, refer to the wiring diagrams. CLEAR the DTC and test the system for normal operation.<br>**No**<br>GO to K3. |
| **K3: CHECK H02S HEATER CONTROL CIRCUIT FROM ECM FOR SHORT CIRCUIT TO POWER** | |
| | 1 Measure the resistance between: |

| H02S connector PI12, harness side | Battery |
|---|---|
| Pin 02 | Positive terminal |

| | |
|---|---|
| | Is the resistance less than 10,000 ohms?<br>**Yes**<br>REPAIR the short circuit. For additional information, refer to the wiring diagrams. CLEAR the DTC and test the system for normal operation.<br>**No**<br>GO to K4. |
| **K4: CHECK H02S HEATER CONTROL CIRCUIT FROM ECM FOR HIGH RESISTANCE** | |
| | 1 Disconnect the ECM electrical connector, PI300. |
| | 2 Measure the resistance between: |

| H02S connector PI12, harness side | ECM connector PI300, harness side |
|---|---|
| Pin 02 | Pin 77 |

| | |
|---|---|
| | Is the resistance greater than 5 ohms?<br>**Yes**<br>REPAIR the high resistance circuit. For additional information, refer to the wiring diagrams. CLEAR the DTC and test the system for normal operation.<br>**No**<br>INSTALL a new H02S.<br>REFER to: Heated Oxygen Sensor (HO2S) (303-14A Electronic Engine Controls - 2.5L/3.0L, Removal and Installation).<br>CLEAR the DTC and test the system for normal operation. If the DTC is repeated, refer to the warranty policy and procedures manual if an ECM is suspect. |

## PINPOINT TEST L : LEFT-HAND CATALYST MONITOR SENSOR SENSING AND GROUND CIRCUITS

CAUTION: Under no circumstances must the sensor wiring be cut to facilitate removal, should this prove necessary.

| TEST CONDITIONS | DETAILS/RESULTS/ACTIONS |
|---|---|
| **L1: CHECK THE CATALYST MONITOR SENSOR SENSING CIRCUIT FOR SHORT CIRCUIT TO GROUND** | |
| | 1 Disconnect the catalyst monitor electrical connector, PI13. |
| | 2 Measure the resistance between: |

| Catalyst monitor connector PI13, harness side | Battery |
|---|---|
| Pin 04 | Negative terminal |

| | |
|---|---|
| | Is the resistance less than 10,000 ohms?<br>**Yes**<br>REPAIR the short circuit. For additional information, refer to the wiring diagrams. CLEAR the DTC and test the system for normal operation.<br>**No**<br>GO to L2. |
| **L2: CHECK THE CATALYST MONITOR SENSOR SENSING CIRCUIT FOR SHORT CIRCUIT TO POWER** | |

SETHMANUALS.org

1 Measure the resistance between:

| Catalyst monitor connector PI13, harness side | Battery |
|---|---|
| Pin 04 | Positive terminal |

Is the resistance less than 10,000 ohms?

**Yes**

REPAIR the short circuit. For additional information, refer to the wiring diagrams. CLEAR the DTC and test the system for normal operation.

**No**

GO to L3.

**L3: CHECK THE CATALYST MONITOR SENSOR SENSING CIRCUIT FOR HIGH RESISTANCE**

1 Disconnect the ECM electrical connector, PI300.

2 Measure the resistance between:

| Catalyst monitor connector PI13, harness side | ECM connector PI300, harness side |
|---|---|
| Pin 04 | Pin 41 |

Is the resistance greater than 5 ohms?

**Yes**

REPAIR the high resistance circuit. For additional information, refer to the wiring diagrams. CLEAR the DTC and test the system for normal operation.

**No**

GO to L4.

**L4: CHECK THE CATALYST MONITOR SENSOR GROUND CIRCUIT FOR HIGH RESISTANCE**

1 Measure the resistance between:

| Catalyst monitor connector PI13, harness side | ECM connector PI300, harness side |
|---|---|
| Pin 03 | Pin 45 |

Is the resistance greater than 5 ohms?

**Yes**

REPAIR the high resistance circuit. For additional information, refer to the wiring diagrams. CLEAR the DTC and test the system for normal operation.

**No**

INSTALL a new catalyst monitor sensor.
REFER to: Catalyst Monitor Sensor (303-14A Electronic Engine Controls - 2.5L/3.0L, Removal and Installation).
CLEAR the DTC and test the system for normal operation.

## PINPOINT TEST M : LEFT-HAND CATALYST MONITOR SENSOR SUPPLY AND HEATER CONTROL CIRCUITS

CAUTION: Under no circumstances must the sensor wiring be cut to facilitate removal, should this prove necessary.

• NOTE: Carry out a visual inspection of the HO2S connectors (integrity of connections may be affected by heat from catalytic converters)

| TEST CONDITIONS | DETAILS/RESULTS/ACTIONS |
|---|---|

**M1: CHECK THE CATALYST MONITOR HEATER POWER SUPPLY CIRCUIT**

1 Disconnect the catalyst monitor sensor electrical connector, PI13.

2 Key on, engine off.

3 Make sure the O2S heater relay is energized.

4 Measure the voltage between:

| Catalyst monitor connector PI13, harness side | Battery |
|---|---|
| Pin 01 | Negative terminal |

Is the voltage greater than 10 volts?

**Yes**

GO to M2.

**No**

REPAIR the power supply circuit to the catalyst monitor heater. This circuit includes the O2S heater relay and fuse 35 of the front power distribution box. For additional information, refer to the wiring diagrams. CLEAR the DTC and test the system for normal operation.

**M2: CHECK THE CATALYST MONITOR HEATER CONTROL CIRCUIT FOR SHORT CIRCUIT TO GROUND**

1 Key off.

2 Measure the resistance between:

| Catalyst monitor connector PI13, harness side | Battery |
|---|---|
| Pin 02 | Negative terminal |

Is the resistance less than 10,000 ohms?

**Yes**

REPAIR the short circuit. For additional information, refer to the wiring diagrams. CLEAR the DTC and test the system for normal operation.

**No**

GO to M3.

**M3: CHECK THE CATALYST MONITOR HEATER CONTROL CIRCUIT FOR SHORT CIRCUIT TO POWER**

1 Measure the resistance between:

| Catalyst monitor connector PI13, harness side | Battery |
|---|---|
| Pin 02 | Positive terminal |

Is the resistance less than 10,000 ohms?

**Yes**

REPAIR the short circuit. For additional information, refer to the wiring diagrams. CLEAR the DTC and test the system for normal operation.

**No**

GO to M4.

**M4: CHECK THE CATALYST MONITOR SENSOR HEATER CONTROL CIRCUIT FOR HIGH RESISTANCE**

1 Disconnect the ECM electrical connector, PI300.

2 Measure the resistance between:

| Catalyst monitor connector PI13, harness side | ECM connector PI300, harness side |
|---|---|
| Pin 02 | Pin 89 |

Is the resistance greater than 5 ohms?

**Yes**

REPAIR the high resistance circuit. For additional information, refer to the wiring diagrams. CLEAR the DTC and test the system for normal operation.

**No**

INSTALL a new catalyst monitor sensor.

GETtheMANUALS.org

| | |
|---|---|
| | REFER to: Catalyst Monitor Sensor (303-14A Electronic Engine Controls - 2.5L/3.0L, Removal and Installation).<br>CLEAR the DTC and test the system for normal operation. |

## PINPOINT TEST N : ENGINE OIL TEMPERATURE (EOT) SENSOR CIRCUIT

| TEST CONDITIONS | DETAILS/RESULTS/ACTIONS |
|---|---|
| **N1: CHECK THE EOT SENSOR SENSING CIRCUIT FOR SHORT CIRCUIT TO GROUND** | |
| | 1 Disconnect the EOT sensor electrical connector, PI24.<br>2 Measure the resistance between:<br>**EOT sensor connector PI24, harness side** — **Battery**<br>Pin 02 — Negative terminal |
| | Is the resistance less than 10,000 ohms?<br>**Yes**<br>REPAIR the short circuit. For additional information, refer to the wiring diagrams. CLEAR the DTC and test the system for normal operation.<br>**No**<br>GO to N2. |
| **N2: CHECK THE EOT SENSOR SENSING CIRCUIT FOR SHORT CIRCUIT TO POWER** | |
| | 1 Measure the resistance between:<br>**EOT sensor connector PI24, harness side** — **Battery**<br>Pin 02 — Positive terminal |
| | Is the resistance less than 10,000 ohms?<br>**Yes**<br>REPAIR the short circuit. For additional information, refer to the wiring diagrams. CLEAR the DTC and test the system for normal operation.<br>**No**<br>GO to N3. |
| **N3: CHECK THE EOT SENSOR SENSING CIRCUIT FOR HIGH RESISTANCE** | |
| | 1 Disconnect the ECM electrical connector, PI300.<br>2 Measure the resistance between:<br>**EOT sensor connector PI24, harness side** — **ECM connector PI300, harness side**<br>Pin 02 — Pin 23 |
| | Is the resistance greater than 5 ohms?<br>**Yes**<br>REPAIR the high resistance circuit. For additional information, refer to the wiring diagrams. CLEAR the DTC and test the system for normal operation.<br>**No**<br>GO to N4. |
| **N4: CHECK THE EOT SENSOR GROUND CIRCUIT FOR HIGH RESISTANCE** | |
| | 1 Measure the resistance between:<br>**EOT sensor connector PI24, harness side** — **ECM connector PI300, harness side**<br>Pin 01 — Pin 10 |
| | Is the resistance greater than 5 ohms?<br>**Yes**<br>REPAIR the high resistance circuit. This circuit includes harness splice, PIS49. For additional information, refer to the wiring diagrams. CLEAR the DTC and test the system for normal operation.<br>**No**<br>INSTALL a new EOT sensor.<br>REFER to: Oil Temperature Sensor (303-14A Electronic Engine Controls - 2.5L/3.0L, Removal and Installation).<br>CLEAR the DTC and test the system for normal operation. If the DTC is repeated, refer to the warranty policy and procedures manual if an ECM is suspect. |

## PINPOINT TEST O : RIGHT-HAND KNOCK SENSOR (KS) CIRCUIT

• NOTE: Before commencing this test, make sure that the sensor is making a good electrical contact with the cylinder block. See "possible causes".

| TEST CONDITIONS | DETAILS/RESULTS/ACTIONS |
|---|---|
| **O1: CHECK KS SENSING CIRCUIT FOR SHORT CIRCUIT TO GROUND** | |
| | 1 Disconnect the KS electrical connector, PI43.<br>2 Measure the resistance between:<br>**KS connector PI43, harness side** — **Battery**<br>Pin 01 — Negative terminal |
| | Is the resistance less than 10,000 ohms?<br>**Yes**<br>REPAIR the short circuit. For additional information, refer to the wiring diagrams. CLEAR the DTC and test the system for normal operation.<br>**No**<br>GO to O2. |
| **O2: CHECK KS SENSING CIRCUIT FOR SHORT CIRCUIT TO POWER** | |
| | 1 Measure the resistance between:<br>**KS connector PI43, harness side** — **Battery**<br>Pin 01 — Positive terminal |
| | Is the resistance less than 10,000 ohms?<br>**Yes**<br>REPAIR the short circuit. For additional information, refer to the wiring diagrams. CLEAR the DTC and test the system for normal operation.<br>**No**<br>GO to O3. |
| **O3: CHECK KS SENSING CIRCUIT FOR HIGH RESISTANCE** | |
| | 1 Disconnect the ECM electrical connector, PI300.<br>2 Measure the resistance between:<br>**KS connector PI43, harness side** — **ECM connector PI300, harness side**<br>Pin 01 — Pin 42 |

GETtheMANUALS.org

| | |
|---|---|
| | Is the resistance greater than 5 ohms?<br>**Yes**<br>REPAIR the high resistance circuit. For additional information, refer to the wiring diagrams. CLEAR the DTC and test the system for normal operation.<br>**No**<br>GO to O4. |
| **O4: CHECK KS GROUND CIRCUIT FOR HIGH RESISTANCE** | |
| | 1 Measure the resistance between: |

| KS connector PI43, harness side | ECM connector PI300, harness side |
|---|---|
| Pin 02 | Pin 19 |

| | |
|---|---|
| | Is the resistance greater than 5 ohms?<br>**Yes**<br>REPAIR the high resistance circuit. For additional information, refer to the wiring diagrams. CLEAR the DTC and test the system for normal operation.<br>**No**<br>INSTALL a new KS.<br>REFER to: Knock Sensor (KS) RH (303-14A Electronic Engine Controls - 2.5L/3.0L, Removal and Installation).<br>CLEAR the DTC and test the system for normal operation. |

## PINPOINT TEST P : LEFT-HAND KNOCK SENSOR (KS) CIRCUIT

• NOTE: Before commencing this test, make sure that the sensor is making a good electrical contact with the cylinder block. See "possible causes".

| TEST CONDITIONS | DETAILS/RESULTS/ACTIONS |
|---|---|
| **P1: CHECK KS SENSING CIRCUIT FOR SHORT CIRCUIT TO GROUND** | |
| | 1 Disconnect the KS electrical connector, PI44. |
| | 2 Measure the resistance between: |

| KS connector PI44, harness side | Battery |
|---|---|
| Pin 01 | Negative terminal |

| | |
|---|---|
| | Is the resistance less than 10,000 ohms?<br>**Yes**<br>REPAIR the short circuit. For additional information, refer to the wiring diagrams. CLEAR the DTC and test the system for normal operation.<br>**No**<br>GO to P2. |
| **P2: CHECK KS SENSING CIRCUIT FOR SHORT CIRCUIT TO POWER** | |
| | 1 Measure the resistance between: |

| KS connector PI44, harness side | Battery |
|---|---|
| Pin 01 | Positive terminal |

| | |
|---|---|
| | Is the resistance less than 10,000 ohms?<br>**Yes**<br>REPAIR the short circuit. For additional information, refer to the wiring diagrams. CLEAR the DTC and test the system for normal operation.<br>**No**<br>GO to P3. |
| **P3: CHECK KS SENSING CIRCUIT FOR HIGH RESISTANCE** | |
| | 1 Disconnect the ECM electrical connector, PI300. |
| | 2 Measure the resistance between: |

| KS connector PI44, harness side | ECM connector PI300, harness side |
|---|---|
| Pin 01 | Pin 43 |

| | |
|---|---|
| | Is the resistance greater than 5 ohms?<br>**Yes**<br>REPAIR the high resistance circuit. For additional information, refer to the wiring diagrams. CLEAR the DTC and test the system for normal operation.<br>**No**<br>GO to P4. |
| **P4: CHECK KS GROUND CIRCUIT FOR HIGH RESISTANCE** | |
| | 1 Measure the resistance between: |

| KS connector PI44, harness side | ECM connector PI300, harness side |
|---|---|
| Pin 02 | Pin 20 |

| | |
|---|---|
| | Is the resistance greater than 5 ohms?<br>**Yes**<br>REPAIR the high resistance circuit. For additional information, refer to the wiring diagrams. CLEAR the DTC and test the system for normal operation.<br>**No**<br>INSTALL a new KS.<br>REFER to: Knock Sensor (KS) LH (303-14A Electronic Engine Controls - 2.5L/3.0L, Removal and Installation).<br>CLEAR the DTC and test the system for normal operation. |

## PINPOINT TEST Q : CRANKSHAFT POSITION (CKP) SENSOR CIRCUIT

• NOTE: The clearance between the CKP sensor and the reluctor ring should be checked at 90° intervals. The air gap between the two should be no greater than 4.5 mm at any point.

| TEST CONDITIONS | DETAILS/RESULTS/ACTIONS |
|---|---|
| **Q1: CHECK THE CKP SENSOR FOR CORRECT INSTALLATION** | |
| | 1 Check the CKP sensor for correct installation. |
| | Is the CKP sensor correctly installed?<br>**Yes**<br>GO to Q2.<br>**No**<br>INSTALL the CKP sensor correctly.<br>REFER to: Crankshaft Position (CKP) Sensor (303-14A Electronic Engine Controls - 2.5L/3.0L, Removal and Installation).<br>Reconnect the sensor. CLEAR the DTCs and test the system for normal operation. |
| **Q2: CHECK THE CKP SENSOR FOR DEBRIS** | |
| | 1 Remove the CKP sensor and inspect for debris. |

GETtheMANUALS.org

Is the CKP sensor free of debris?
**Yes**
GO to Q3.
**No**
CLEAN the sensor and wheel. INSTALL the sensor.
REFER to: Crankshaft Position (CKP) Sensor (303-14A Electronic Engine Controls - 2.5L/3.0L, Removal and Installation).
Reconnect the sensor. CLEAR the DTCs and test the system for normal operation.

**Q3: CHECK THE CKP SENSOR SENSING CIRCUIT FOR SHORT CIRCUIT TO GROUND**

1. Disconnect the CKP sensor electrical connector, PI21.
2. Measure the resistance between:

| CKP sensor connector PI21, harness side | Battery |
|---|---|
| Pin 02 | Negative terminal |

Is the resistance less than 10,000 ohms?
**Yes**
REPAIR the short circuit. For additional information, refer to the wiring diagrams. CLEAR the DTC and test the system for normal operation.
**No**
GO to Q4.

**Q4: CHECK THE CKP SENSOR SENSING CIRCUIT FOR SHORT CIRCUIT TO POWER**

1. Measure the resistance between:

| CKP sensor connector PI21, harness side | Battery |
|---|---|
| Pin 02 | Positive terminal |

Is the resistance less than 10,000 ohms?
**Yes**
REPAIR the short circuit. For additional information, refer to the wiring diagrams. CLEAR the DTC and test the system for normal operation.
**No**
GO to Q5.

**Q5: CHECK THE CKP SENSOR SENSING CIRCUIT FOR HIGH RESISTANCE**

1. Disconnect the ECM electrical connector, PI300.
2. Measure the resistance between:

| CKP sensor connector PI21, harness side | ECM connector PI300, harness side |
|---|---|
| Pin 02 | Pin 30 |

Is the resistance greater than 5 ohms?
**Yes**
REPAIR the high resistance circuit. For additional information, refer to the wiring diagrams. CLEAR the DTC and test the system for normal operation.
**No**
GO to Q6.

**Q6: CHECK THE CKP SENSOR GROUND CIRCUIT FOR HIGH RESISTANCE**

1. Measure the resistance between:

| CKP sensor connector PI21, harness side | ECM connector PI300, harness side |
|---|---|
| Pin 01 | Pin 06 |

Is the resistance greater than 5 ohms?
**Yes**
REPAIR the high resistance circuit. For additional information, refer to the wiring diagrams. CLEAR the DTC and test the system for normal operation.
**No**
INSTALL a new CKP sensor.
REFER to: Crankshaft Position (CKP) Sensor (303-14A Electronic Engine Controls - 2.5L/3.0L, Removal and Installation).
CLEAR the DTC and test the system for normal operation.

## PINPOINT TEST R : RIGHT-HAND CAMSHAFT POSITION (CMP) SENSOR CIRCUIT

| TEST CONDITIONS | DETAILS/RESULTS/ACTIONS |
|---|---|

**R1: CHECK THE CMP SENSOR FOR CORRECT INSTALLATION**

1. Check the CMP sensor for correct installation.

Is the CMP sensor correctly installed?
**Yes**
GO to R2.
**No**
INSTALL the CMP sensor correctly.
REFER to: Camshaft Position (CMP) Sensor RH (303-14A Electronic Engine Controls - 2.5L/3.0L, Removal and Installation).
CLEAR the DTCs and test the system for normal operation.

**R2: CHECK THE CMP SENSOR FOR FOREIGN DEBRIS**

1. Remove the CMP sensor and inspect for foreign debris.

Is the CMP sensor free of foreign debris?
**Yes**
GO to R3.
**No**
CLEAN the sensor and wheel. INSTALL the sensor.
REFER to: Camshaft Position (CMP) Sensor RH (303-14A Electronic Engine Controls - 2.5L/3.0L, Removal and Installation).
CLEAR the DTCs and test the system for normal operation.

**R3: CHECK THE CMP SENSOR SENSING CIRCUIT FOR SHORT CIRCUIT TO GROUND**

1. Disconnect the CMP sensor electrical connector, PI23.
2. Measure the resistance between:

| CMP sensor connector PI23, harness side | Battery |
|---|---|
| Pin 01 | Negative terminal |

Is the resistance less than 10,000 ohms?
**Yes**
REPAIR the short circuit. For additional information, refer to the wiring diagrams. CLEAR the DTC and test the system for normal operation.
**No**

GETtheMANUALS.org

GO to R4.

**R4: CHECK THE CMP SENSOR SENSING CIRCUIT FOR SHORT CIRCUIT TO POWER**

1 Measure the resistance between:

| CMP sensor connector PI23, harness side | Battery |
|---|---|
| Pin 01 | Positive terminal |

Is the resistance less than 10,000 ohms?

**Yes**

REPAIR the short circuit. For additional information, refer to the wiring diagrams. CLEAR the DTC and test the system for normal operation.

**No**

GO to R5.

**R5: CHECK THE CMP SENSOR SENSING CIRCUIT FOR HIGH RESISTANCE**

1 Disconnect the ECM electrical connector, PI300.

2 Measure the resistance between:

| CMP sensor connector PI23, harness side | ECM connector PI300, harness side |
|---|---|
| Pin 01 | Pin 34 |

Is the resistance greater than 5 ohms?

**Yes**

REPAIR the high resistance circuit. For additional information, refer to the wiring diagrams. CLEAR the DTC and test the system for normal operation.

**No**

GO to R6.

**R6: CHECK THE CMP SENSOR GROUND CIRCUIT FOR HIGH RESISTANCE**

1 Measure the resistance between:

| CMP sensor connector PI23, harness side | ECM connector PI300, harness side |
|---|---|
| Pin 02 | Pin 07 |

Is the resistance greater than 5 ohms?

**Yes**

REPAIR the high resistance circuit. For additional information, refer to the wiring diagrams. CLEAR the DTC and test the system for normal operation.

**No**

INSTALL a new CMP sensor.
REFER to: Camshaft Position (CMP) Sensor RH (303-14A Electronic Engine Controls - 2.5L/3.0L, Removal and Installation).
CLEAR the DTC and test the system for normal operation.

## PINPOINT TEST S : LEFT-HAND CAMSHAFT POSITION (CMP) SENSOR CIRCUIT

| TEST CONDITIONS | DETAILS/RESULTS/ACTIONS |
|---|---|

**S1: CHECK THE CMP SENSOR FOR CORRECT INSTALLATION**

1 Check the CMP sensor for correct installation.

Is the CMP sensor correctly installed?

**Yes**

GO to S2.

**No**

INSTALL the CMP sensor correctly.
REFER to: Camshaft Position (CMP) Sensor LH (303-14A Electronic Engine Controls - 2.5L/3.0L, Removal and Installation).
CLEAR the DTCs and test the system for normal operation.

**S2: CHECK THE CMP SENSOR FOR FOREIGN DEBRIS**

1 Remove the CMP sensor and inspect for foreign debris.

Is the CMP sensor free of foreign debris?

**Yes**

GO to S3.

**No**

CLEAN the sensor and wheel. INSTALL the sensor.
REFER to: Camshaft Position (CMP) Sensor LH (303-14A Electronic Engine Controls - 2.5L/3.0L, Removal and Installation).
CLEAR the DTCs and test the system for normal operation.

**S3: CHECK THE CMP SENSOR SENSING CIRCUIT FOR SHORT CIRCUIT TO GROUND**

1 Disconnect the CMP sensor electrical connector, PI22.

2 Measure the resistance between:

| CMP sensor connector PI22, harness side | Battery |
|---|---|
| Pin 01 | Negative terminal |

Is the resistance less than 10,000 ohms?

**Yes**

REPAIR the short circuit. For additional information, refer to the wiring diagrams. CLEAR the DTC and test the system for normal operation.

**No**

GO to S4.

**S4: CHECK THE CMP SENSOR SENSING CIRCUIT FOR SHORT CIRCUIT TO POWER**

1 Measure the resistance between:

| CMP sensor connector PI22, harness side | Battery |
|---|---|
| Pin 01 | Positive terminal |

Is the resistance less than 10,000 ohms?

**Yes**

REPAIR the short circuit. For additional information, refer to the wiring diagrams. CLEAR the DTC and test the system for normal operation.

**No**

GO to S5.

**S5: CHECK THE CMP SENSOR SENSING CIRCUIT FOR HIGH RESISTANCE**

1 Disconnect the ECM electrical connector, PI300.

2 Measure the resistance between:

| CMP sensor connector PI22, harness side | ECM connector PI300, harness side |
|---|---|
| Pin 01 | Pin 33 |

GETtheMANUALS.org

Is the resistance greater than 5 ohms?

**Yes**

REPAIR the high resistance circuit. For additional information, refer to the wiring diagrams. CLEAR the DTC and test the system for normal operation.

**No**

GO to S6.

**S6: CHECK THE CMP SENSOR GROUND CIRCUIT FOR HIGH RESISTANCE**

1 Measure the resistance between:

| CMP sensor connector PI22, harness side | ECM connector PI300, harness side |
|---|---|
| Pin 02 | Pin 08 |

Is the resistance greater than 5 ohms?

**Yes**

REPAIR the high resistance circuit. For additional information, refer to the wiring diagrams. CLEAR the DTC and test the system for normal operation.

**No**

INSTALL a new CMP sensor.
REFER to: Camshaft Position (CMP) Sensor LH (303-14A Electronic Engine Controls - 2.5L/3.0L, Removal and Installation).
CLEAR the DTC and test the system for normal operation.

## PINPOINT TEST T : RADIATOR COOLING FAN MODULE DRIVE CIRCUIT

| TEST CONDITIONS | DETAILS/RESULTS/ACTIONS |
|---|---|

**T1: CHECK THE RADIATOR FAN MODULE PERMANENT SUPPLY**

1 Disconnect the fan module electrical connector, FH109.

2 Measure the voltage between:

| Fan module connector FH109, harness side | Battery |
|---|---|
| Pin 01 | Negative terminal |

Is the voltage less than 10 volts?

**Yes**

REPAIR the circuit between the cooling fan module and battery. This circuit includes fuse 13 of the front power distribution box and the mega fuses. For additional information, refer to the wiring diagrams. CLEAR the DTC and test the system for normal operation.

**No**

GO to T2.

**T2: CHECK THE RADIATOR FAN MODULE EMS SWITCHED SUPPLY**

1 Disconnect the fan module electrical connector, FH108.

2 Key on, engine off.

3 Make sure the EMS relay is engergized.

4 Measure the voltage between:

| Fan module connector FH108, harness side | Battery |
|---|---|
| Pin 02 | Negative terminal |

Is the voltage less than 10 volts?

**Yes**

REPAIR the circuit between the cooling fan module and battery. This circuit includes fuse 38 of the front power distribution box and the EMS control relay. For additional information, refer to the wiring diagrams. CLEAR the DTC and test the system for normal operation.

**No**

GO to T3.

**T3: CHECK THE RADIATOR FAN MODULE CONTROL CIRCUIT FOR SHORT CIRCUIT TO GROUND**

1 Key off.

2 Measure the resistance between:

| Fan module connector FH108, harness side | Battery |
|---|---|
| Pin 01 | Negative terminal |

Is the resistance less than 10,000 ohms?

**Yes**

REPAIR the short circuit. For additional information, refer to the wiring diagrams. CLEAR the DTC and test the system for normal operation.

**No**

GO to T4.

**T4: CHECK THE RADIATOR FAN MODULE CONTROL CIRCUIT FOR SHORT CIRCUIT TO POWER**

1 Measure the resistance between:

| Fan module connector FH108, harness side | Battery |
|---|---|
| Pin 01 | Positive terminal |

Is the resistance less than 10,000 ohms?

**Yes**

REPAIR the short circuit. For additional information, refer to the wiring diagrams. CLEAR the DTC and test the system for normal operation.

**No**

GO to T5.

**T5: CHECK THE RADIATOR FAN MODULE CONTROL CIRCUIT FOR HIGH RESISTANCE**

1 Disconnect the ECM electrical connector, FH300.

2 Measure the resistance between:

| Fan module connector FH108, harness side | ECM connector FH300, harness side |
|---|---|
| Pin 01 | Pin 49 |

Is the resistance greater than 5 ohms?

**Yes**

REPAIR the high resistance circuit. For additional information, refer to the wiring diagrams. CLEAR the DTC and test the system for normal operation.

**No**

GO to T6.

**T6: CHECK THE RADIATOR FAN MODULE GROUND FOR HIGH RESISTANCE**

1 Measure the resistance between:

| Fan module connector FH109, harness side | Battery |
|---|---|
| Pin 02 | Negative terminal |

GETthemANUALS.org

| | |
|---|---|
| | Is the resistance greater than 5 ohms?<br>**Yes**<br>REPAIR the high resistance circuit. For additional information, refer to the wiring diagrams. CLEAR the DTC and test the system for normal operation.<br>**No**<br>INSTALL a new radiator cooling fan module. CLEAR the DTC and test the system for normal operation. |

## PINPOINT TEST U : BATTERY POWER SUPPLY VOLTAGE

| TEST CONDITIONS | DETAILS/RESULTS/ACTIONS |
|---|---|
| **U1: CHECK THE BATTERY POWER SUPPLY TO THE ECM** | |
| | 1 Disconnect the ECM electrical connector, FH300. |
| | 2 Measure the voltage between: |

| ECM connector FH300, harness side | Battery |
|---|---|
| Pin 54 | Negative terminal |

| | |
|---|---|
| | Is the voltage greater than 10 volts?<br>**Yes**<br>Recheck the DTCs.<br>**No**<br>REPAIR the battery power supply circuit. This circuit includes fuse 33 of the front power distribution box. For additional information, refer to the wiring diagrams. CLEAR the DTC and test the system for normal operation. |

## PINPOINT TEST V : ACCELERATOR PEDAL POSITION (APP) SENSOR CIRCUIT 1

| TEST CONDITIONS | DETAILS/RESULTS/ACTIONS |
|---|---|
| **V1: CHECK THE APP SENSOR SUPPLY VOLTAGE AT THE SENSOR** | |
| | 1 Disconnect the APP sensor electrical connector, CA88. |
| | 2 Key on, engine off. |
| | 3 Measure the voltage between: |

| APP sensor connector CA88, harness side | Battery |
|---|---|
| Pin 05 | Negative terminal |

| | |
|---|---|
| | Is the voltage less than 4 volts?<br>**Yes**<br>REPAIR the 5 volt supply circuit between the APP sensor and the ECM. For additional information, refer to the wiring diagrams. CLEAR the DTC and test the system for normal operation.<br>**No**<br>GO to V2. |
| **V2: CHECK THE APP SENSOR SUPPLY CIRCUIT FOR SHORT CIRCUIT TO POWER** | |
| | 1 Key off. |
| | 2 Measure the resistance between: |

| APP sensor connector CA88, harness side | Battery |
|---|---|
| Pin 05 | Positive terminal |

| | |
|---|---|
| | Is the resistance less than 10,000 ohms?<br>**Yes**<br>REPAIR the short circuit. For additional information, refer to the wiring diagrams. CLEAR the DTC and test the system for normal operation.<br>**No**<br>GO to V3. |
| **V3: CHECK THE APP SENSOR SENSING CIRCUIT 1 FOR SHORT CIRCUIT TO GROUND** | |
| | 1 Measure the resistance between: |

| APP sensor connector CA88, harness side | Battery |
|---|---|
| Pin 04 | Negative terminal |

| | |
|---|---|
| | Is the resistance less than 10,000 ohms?<br>**Yes**<br>REPAIR the short circuit. For additional information, refer to the wiring diagrams. CLEAR the DTC and test the system for normal operation.<br>**No**<br>GO to V4. |
| **V4: CHECK THE APP SENSOR SENSING CIRCUIT 1 FOR SHORT CIRCUIT TO POWER** | |
| | 1 Measure the resistance between: |

| APP sensor connector CA88, harness side | Battery |
|---|---|
| Pin 04 | Positive terminal |

| | |
|---|---|
| | Is the resistance less than 10,000 ohms?<br>**Yes**<br>REPAIR the short circuit. For additional information, refer to the wiring diagrams. CLEAR the DTC and test the system for normal operation.<br>**No**<br>GO to V5. |
| **V5: CHECK THE APP SENSOR SENSING CIRCUIT 1 FOR HIGH RESISTANCE** | |
| | 1 Disconnect the ECM electrical connector, FH300. |
| | 2 Measure the resistance between: |

| APP sensor connector CA88, harness side | ECM connector FH300, harness side |
|---|---|
| Pin 04 | Pin 24 |

| | |
|---|---|
| | Is the resistance greater than 5 ohms?<br>**Yes**<br>REPAIR the high resistance circuit. For additional information, refer to the wiring diagrams. CLEAR the DTC and test the system for normal operation.<br>**No**<br>GO to V6. |
| **V6: CHECK THE APP SENSOR GROUND CIRCUIT FOR HIGH RESISTANCE** | |
| | 1 Measure the resistance between: |

| APP sensor connector CA88, harness side | ECM connector FH300, harness side |
|---|---|
| Pin 06 | Pin 08 |

GETtheMANUALS.org

| | |
|---|---|
| | Is the resistance greater than 5 ohms?<br>**Yes**<br>REPAIR the high resistance circuit. For additional information, refer to the wiring diagrams. CLEAR the DTC and test the system for normal operation.<br>**No**<br>INSTALL a new APP sensor.<br>REFER to: Accelerator Pedal - 2.5L/3.0L/4.2L (310-02 Acceleration Control, Removal and Installation).<br>CLEAR the DTC and test the system for normal operation. |

## PINPOINT TEST W : ACCELERATOR PEDAL POSITION (APP) SENSOR CIRCUIT 2

| TEST CONDITIONS | DETAILS/RESULTS/ACTIONS |
|---|---|
| **W1: CHECK THE APP SENSOR SUPPLY VOLTAGE AT THE SENSOR** | |
| | 1 Disconnect the APP sensor electrical connector, CA88. |
| | 2 Key on, engine off. |
| | 3 Measure the voltage between: |

| APP sensor connector CA88, harness side | Battery |
|---|---|
| Pin 02 | Negative terminal |

| | |
|---|---|
| | Is the voltage less than 4 volts?<br>**Yes**<br>REPAIR the 5 volt supply circuit between the APP sensor and the ECM. For additional information, refer to the wiring diagrams. CLEAR the DTC and test the system for normal operation.<br>**No**<br>GO to W2. |
| **W2: CHECK THE APP SENSOR SUPPLY CIRCUIT FOR SHORT CIRCUIT TO POWER** | |
| | 1 Key off. |
| | 2 Measure the resistance between: |

| APP sensor connector CA88, harness side | Battery |
|---|---|
| Pin 02 | Positive terminal |

| | |
|---|---|
| | Is the resistance less than 10,000 ohms?<br>**Yes**<br>REPAIR the short circuit. For additional information, refer to the wiring diagrams. CLEAR the DTC and test the system for normal operation.<br>**No**<br>GO to W3. |
| **W3: CHECK THE APP SENSOR SENSING CIRCUIT 2 FOR SHORT CIRCUIT TO GROUND** | |
| | 1 Measure the resistance between: |

| APP sensor connector CA88, harness side | Battery |
|---|---|
| Pin 01 | Negative terminal |

| | |
|---|---|
| | Is the resistance less than 10,000 ohms?<br>**Yes**<br>REPAIR the short circuit. For additional information, refer to the wiring diagrams. CLEAR the DTC and test the system for normal operation.<br>**No**<br>GO to W4. |
| **W4: CHECK THE APP SENSOR SENSING CIRCUIT 2 FOR SHORT CIRCUIT TO POWER** | |
| | 1 Measure the resistance between: |

| APP sensor connector CA88, harness side | Battery |
|---|---|
| Pin 01 | Positive terminal |

| | |
|---|---|
| | Is the resistance less than 10,000 ohms?<br>**Yes**<br>REPAIR the short circuit. For additional information, refer to the wiring diagrams. CLEAR the DTC and test the system for normal operation.<br>**No**<br>GO to W5. |
| **W5: CHECK THE APP SENSOR SENSING CIRCUIT 2 FOR HIGH RESISTANCE** | |
| | 1 Disconnect the ECM electrical connector, FH300. |
| | 2 Measure the resistance between: |

| APP sensor connector CA88, harness side | ECM connector FH300, harness side |
|---|---|
| Pin 01 | Pin 38 |

| | |
|---|---|
| | Is the resistance greater than 5 ohms?<br>**Yes**<br>REPAIR the high resistance circuit. For additional information, refer to the wiring diagrams. CLEAR the DTC and test the system for normal operation.<br>**No**<br>GO to W6. |
| **W6: CHECK THE APP SENSOR GROUND CIRCUIT FOR HIGH RESISTANCE** | |
| | 1 Measure the resistance between: |

| APP sensor connector CA88, harness side | ECM connector FH300, harness side |
|---|---|
| Pin 03 | Pin 07 |

| | |
|---|---|
| | Is the resistance greater than 5 ohms?<br>**Yes**<br>REPAIR the high resistance circuit. For additional information, refer to the wiring diagrams. CLEAR the DTC and test the system for normal operation.<br>**No**<br>INSTALL a new APP sensor.<br>REFER to: Accelerator Pedal - 2.5L/3.0L/4.2L (310-02 Acceleration Control, Removal and Installation).<br>CLEAR the DTC and test the system for normal operation. |

## PINPOINT TEST X : THROTTLE MOTOR CONTROL CIRCUIT

| TEST CONDITIONS | DETAILS/RESULTS/ACTIONS |
|---|---|
| **X1: CHECK THE THROTTLE MOTOR TO ECM NEGATIVE CIRCUIT FOR HIGH RESISTANCE** | |
| | 1 Disconnect the throttle motor electrical connector, PI26. |
| | 2 Disconnect the ECM electrical connector, PI300. |

GETthemANUALS.org

| | |
|---|---|
| | 3 Measure the resistance between: |

| Throttle motor connector PI26, harness side | ECM connector PI300, harness side |
|---|---|
| Pin 01 | Pin 74 |

Is the resistance greater than 5 ohms?

**Yes**

REPAIR the high resistance circuit. For additional information, refer to the wiring diagrams. CLEAR the DTC and test the system for normal operation.

**No**

GO to X2.

**X2: CHECK THE THROTTLE MOTOR TO ECM POSITIVE CIRCUIT FOR HIGH RESISTANCE**

1 Measure the resistance between:

| Throttle motor connector PI26, harness side | ECM connector PI300, harness side |
|---|---|
| Pin 02 | Pin 75 |

Is the resistance greater than 5 ohms?

**Yes**

REPAIR the high resistance circuit. For additional information, refer to the wiring diagrams. CLEAR the DTC and test the system for normal operation.

**No**

INSTALL a new throttle body.
REFER to: Throttle Body - VIN Range: N52207->N99999 (303-04A Fuel Charging and Controls - 2.5L/3.0L, Removal and Installation).
CLEAR the DTC and test the system for normal operation.

## PINPOINT TEST Y : FUEL RAIL PRESSURE (FRP) SENSOR CIRCUIT

| TEST CONDITIONS | DETAILS/RESULTS/ACTIONS |
|---|---|

**Y1: CHECK THE FRP SENSOR SUPPLY CIRCUIT VOLTAGE**

1 Disconnect the FRP sensor electrical connector, IL12.

2 Key on, engine off.

3 Measure the voltage between:

| FRP sensor connector IL12, harness side | Battery |
|---|---|
| Pin 01 | Negative terminal |

Is the voltage less than 4 volts?

**Yes**

REPAIR the 5 volt supply circuit between the FRP sensor and the ECM. For additional information, refer to the wiring diagrams. CLEAR the DTC and test the system for normal operation.

**No**

GO to Y2.

**Y2: CHECK THE FRP SENSOR SUPPLY CIRCUIT FOR SHORT CIRCUIT TO POWER**

1 Key off.

2 Measure the resistance between:

| FRP sensor connector IL12, harness side | Battery |
|---|---|
| Pin 01 | Positive terminal |

Is the resistance less than 10,000 ohms?

**Yes**

REPAIR the short circuit. For additional information, refer to the wiring diagrams. CLEAR the DTC and test the system for normal operation.

**No**

GO to Y3.

**Y3: CHECK THE FRP SENSOR SIGNAL CIRCUIT FOR SHORT CIRCUIT TO GROUND**

1 Measure the resistance between:

| FRP sensor connector IL12, harness side | Battery |
|---|---|
| Pin 03 | Negative terminal |

Is the resistance less than 10,000 ohms?

**Yes**

REPAIR the short circuit. For additional information, refer to the wiring diagrams. CLEAR the DTC and test the system for normal operation.

**No**

GO to Y4.

**Y4: CHECK THE FRP SENSOR SIGNAL CIRCUIT FOR SHORT CIRCUIT TO POWER**

1 Measure the resistance between:

| FRP sensor connector IL12, harness side | Battery |
|---|---|
| Pin 03 | Positive terminal |

Is the resistance less than 10,000 ohms?

**Yes**

REPAIR the short circuit. For additional information, refer to the wiring diagrams. CLEAR the DTC and test the system for normal operation.

**No**

GO to Y5.

**Y5: CHECK THE FRP SENSOR SIGNAL CIRCUIT FOR HIGH RESISTANCE**

1 Disconnect the ECM sensor electrical connector, PI300.

2 Measure the resistance between:

| FRP sensor connector IL12, harness side | ECM connector PI300, harness side |
|---|---|
| Pin 03 | Pin 71 |

Is the resistance greater than 5 ohms?

**Yes**

REPAIR the high resistance circuit. For additional information, refer to the wiring diagrams. CLEAR the DTC and test the system for normal operation.

**No**

GO to Y6.

**Y6: CHECK THE FRP SENSOR GROUND CIRCUIT FOR HIGH RESISTANCE**

1 Measure the resistance between:

| FRP sensor connector IL12, harness side | ECM connector PI300, harness side |
|---|---|
| Pin 02 | Pin 10 |

GETtheMANUALS.org

| | |
|---|---|
| | Is the resistance greater than 5 ohms?<br>**Yes**<br>REPAIR the high resistance circuit. For additional information, refer to the wiring diagrams. CLEAR the DTC and test the system for normal operation.<br>**No**<br>INSTALL a new FRP sensor. CLEAR the DTC and test the system for normal operation. |

## PINPOINT TEST Z : STARTER RELAY SIGNAL

| TEST CONDITIONS | DETAILS/RESULTS/ACTIONS |
|---|---|
| **Z1: CHECK THE STARTER RELAY TO ECM CIRCUIT FOR SHORT CIRCUIT TO GROUND** | |
| | 1 Key off. |
| | 2 Remove the starter relay. |
| | 3 Measure the resistance between: |

| Starter relay base | Battery |
|---|---|
| Pin 02 | Negative terminal |

| | |
|---|---|
| | Is the resistance less than 10,000 ohms?<br>**Yes**<br>REPAIR the short circuit. For additional information, refer to the wiring diagrams. CLEAR the DTC and test the system for normal operation.<br>**No**<br>GO to Z2. |
| **Z2: CHECK THE STARTER RELAY TO ECM CIRCUIT FOR SHORT CIRCUIT TO POWER** | |
| | 1 Measure the resistance between: |

| Starter relay base | Battery |
|---|---|
| Pin 02 | Positive terminal |

| | |
|---|---|
| | Is the resistance less than 10,000 ohms?<br>**Yes**<br>REPAIR the short circuit. For additional information, refer to the wiring diagrams. CLEAR the DTC and test the system for normal operation.<br>**No**<br>GO to Z3. |
| **Z3: CHECK THE STARTER RELAY TO ECM CIRCUIT FOR HIGH RESISTANCE** | |
| | 1 Disconnect the ECM electrical connector, EC300. |
| | 2 Measure the resistance between: |

| Starter relay base | ECM connector EC300, harness side |
|---|---|
| Pin 02 | Pin 51 |

| | |
|---|---|
| | Is the resistance greater than 5 ohms?<br>**Yes**<br>REPAIR the high resistance circuit. For additional information, refer to the wiring diagrams. CLEAR the DTC and test the system for normal operation.<br>**No**<br>INSTALL a new starter relay. Clear the DTC and test the system for normal operation. If the DTC resets, refer to the warranty policy and procedures manual if an ECM is suspect. |

## PINPOINT TEST AA : RIGHT-HAND VARIABLE CAMSHAFT TIMING (VCT) OIL CONTROL SOLENOID CIRCUIT

| TEST CONDITIONS | DETAILS/RESULTS/ACTIONS |
|---|---|
| **AA1: CHECK ECM TO VCT SOLENOID SUPPLY CIRCUIT VOLTAGE** | |
| | 1 Disconnect the VCT solenoid electrical connector, PI16. |
| | 2 Key on, engine off. |
| | 3 Measure the voltage between: |

| VCT solenoid connector PI16, harness side | Battery |
|---|---|
| Pin 02 | Negative terminal |

| | |
|---|---|
| | Is the voltage greater than 10 volts?<br>**Yes**<br>GO to AA2.<br>**No**<br>REPAIR the circuit between the VCT solenoid electrical connector and battery. This circuit includes fuse 38 of the front power distribution box and the EMS control relay. For additional information, refer to the wiring diagrams. CLEAR the DTC and test the system for normal operation. |
| **AA2: CHECK VCT SOLENOID CONTROL CIRCUIT FOR HIGH RESISTANCE** | |
| | 1 Key off. |
| | 2 Disconnect the ECM electrical connector, PI300. |
| | 3 Measure the resistance between: |

| VCT solenoid connector PI16, harness side | ECM connector PI300, harness side |
|---|---|
| Pin 01 | Pin 86 |

| | |
|---|---|
| | Is the resistance greater than 5 ohms?<br>**Yes**<br>REPAIR the high resistance circuit. For additional information, refer to the wiring diagrams. CLEAR the DTC and test the system for normal operation.<br>**No**<br>INSTALL a new VCT oil control solenoid.<br>REFER to: Variable Camshaft Timing (VCT) Oil Control Solenoid (303-14A Electronic Engine Controls - 2.5L/3.0L, Removal and Installation).<br>CLEAR the DTC and test the system for normal operation. |

## PINPOINT TEST AB : LEFT-HAND VARIABLE CAMSHAFT TIMING (VCT) OIL CONTROL SOLENOID CIRCUIT

| TEST CONDITIONS | DETAILS/RESULTS/ACTIONS |
|---|---|
| **AB1: CHECK ECM TO VCT SOLENOID SUPPLY CIRCUIT VOLTAGE** | |
| | 1 Disconnect the VCT solenoid electrical connector, PI17. |
| | 2 Key on, engine off. |

GETtheMANUALS.org

3 Measure the voltage between:

| VCT solenoid connector PI17, harness side | Battery |
|---|---|
| Pin 02 | Negative terminal |

Is the voltage greater than 10 volts?

**Yes**

GO to AB2.

**No**

REPAIR the circuit between the VCT solenoid electrical connector and battery. This circuit includes fuse 38 of the front power distribution box and the EMS control relay. For additional information, refer to the wiring diagrams. CLEAR the DTC and test the system for normal operation.

**AB2: CHECK VCT SOLENOID CONTROL CIRCUIT FOR HIGH RESISTANCE**

1 Key off.

2 Disconnect the ECM electrical connector, PI300.

3 Measure the resistance between:

| VCT solenoid connector PI17, harness side | ECM connector PI300, harness side |
|---|---|
| Pin 01 | Pin 87 |

Is the resistance greater than 5 ohms?

**Yes**

REPAIR the high resistance circuit. For additional information, refer to the wiring diagrams. CLEAR the DTC and test the system for normal operation.

**No**

INSTALL a new VCT oil control solenoid.
REFER to: Variable Camshaft Timing (VCT) Oil Control Solenoid (303-14A Electronic Engine Controls - 2.5L/3.0L, Removal and Installation).
CLEAR the DTC and test the system for normal operation.

## PINPOINT TEST AC : EMS CONTROL RELAY CIRCUITS

| TEST CONDITIONS | DETAILS/RESULTS/ACTIONS |
|---|---|

**AC1: CHECK THE EMS RELAY PERMANENT SUPPLY VOLTAGES**

1 Remove the EMS relay.

2 Measure the voltage between:

| EMS relay base, harness side | Battery |
|---|---|
| Pin 01 | Negative terminal |
| Pin 03 | Negative terminal |

Are both voltages greater than 10 volts?

**Yes**

GO to AC2.

**No**

REPAIR the circuit between the relay base and battery. For additional information, refer to the wiring diagrams. CLEAR the DTC and test the system for normal operation.

**AC2: CHECK THE ECM TO EMS RELAY CONTROL CIRCUIT FOR SHORT CIRCUIT TO GROUND**

1 Measure the resistance between:

| EMS relay base, harness side | Battery |
|---|---|
| Pin 02 | Negative terminal |

Is the resistance less than 10,000 ohms?

**Yes**

REPAIR the short circuit. For additional information, refer to the wiring diagrams. CLEAR the DTC and test the system for normal operation.

**No**

GO to AC3.

**AC3: CHECK THE ECM TO EMS RELAY CONTROL CIRCUIT FOR SHORT CIRCUIT TO POWER**

1 Measure the resistance between:

| EMS relay base, harness side | Battery |
|---|---|
| Pin 02 | Positive terminal |

Is the resistance less than 10,000 ohms?

**Yes**

REPAIR the short circuit. For additional information, refer to the wiring diagrams. CLEAR the DTC and test the system for normal operation.

**No**

GO to AC4.

**AC4: CHECK THE ECM TO EMS RELAY CONTROL CIRCUIT FOR HIGH RESISTANCE**

1 Disconnect the ECM electrical connector, FH300.

2 Measure the resistance between:

| EMS relay base, harness side | ECM connector FH300, harness side |
|---|---|
| Pin 02 | Pin 16 |

Is the resistance greater than 5 ohms?

**Yes**

REPAIR the high resistance circuit. For additional information, refer to the wiring diagrams. CLEAR the DTC and test the system for normal operation.

**No**

GO to AC5.

**AC5: CHECK THE EMS RELAY TO ECM IGNITION CIRCUITS FOR HIGH RESISTANCE**

1 Measure the resistance between:

| EMS relay base, harness side | ECM connector FH300, harness side |
|---|---|
| Pin 05 | Pin 04 |
| Pin 05 | Pin 06 |

Is either resistance greater than 5 ohms?

**Yes**

REPAIR the high resistance circuit. These circuits include fuses 18 and 38 of the front power distribution box. For additional information, refer to the wiring diagrams. CLEAR the DTC and test the system for normal operation.

**No**

INSTALL a new EMS control relay. CLEAR the DTC and test the system for normal operation.

GETtheMANUALS.org

## PINPOINT TEST AD : MANIFOLD ABSOLUTE PRESSURE (MAP) SENSOR CIRCUIT

| TEST CONDITIONS | DETAILS/RESULTS/ACTIONS |
|---|---|
| **AD1: CHECK THE MAP SENSOR SUPPLY CIRCUIT VOLTAGE** | |
| | 1 Disconnect the MAP sensor electrical connector, PI29. |
| | 2 Key on, engine off. |
| | 3 Measure the voltage between: |

| MAP sensor connector PI29, harness side | Battery |
|---|---|
| Pin 02 | Negative terminal |

| | |
|---|---|
| | Is the voltage less than 4 volts?<br>**Yes**<br>REPAIR the 5 volt supply circuit between the MAP sensor and the ECM. For additional information, refer to the wiring diagrams. CLEAR the DTC and test the system for normal operation.<br>**No**<br>GO to AD2. |
| **AD2: CHECK THE MAP SENSOR SUPPLY CIRCUIT FOR SHORT CIRCUIT TO POWER** | |
| | 1 Key off. |
| | 2 Measure the resistance between: |

| MAP sensor connector PI29, harness side | Battery |
|---|---|
| Pin 02 | Positive terminal |

| | |
|---|---|
| | Is the resistance less than 10,000 ohms?<br>**Yes**<br>REPAIR the short circuit. For additional information, refer to the wiring diagrams. CLEAR the DTC and test the system for normal operation.<br>**No**<br>GO to AD3. |
| **AD3: CHECK THE MAP SENSOR SENSING CIRCUIT FOR SHORT CIRCUIT TO GROUND** | |
| | 1 Measure the resistance between: |

| MAP sensor connector PI29, harness side | Battery |
|---|---|
| Pin 01 | Negative terminal |

| | |
|---|---|
| | Is the resistance less than 10,000 ohms?<br>**Yes**<br>REPAIR the short circuit. For additional information, refer to the wiring diagrams. CLEAR the DTC and test the system for normal operation.<br>**No**<br>GO to AD4. |
| **AD4: CHECK THE MAP SENSOR SENSING CIRCUIT FOR SHORT CIRCUIT TO POWER** | |
| | 1 Measure the resistance between: |

| MAP sensor connector PI29, harness side | Battery |
|---|---|
| Pin 01 | Positive terminal |

| | |
|---|---|
| | Is the resistance less than 10,000 ohms?<br>**Yes**<br>REPAIR the short circuit. For additional information, refer to the wiring diagrams. CLEAR the DTC and test the system for normal operation.<br>**No**<br>GO to AD5. |
| **AD5: CHECK THE MAP SENSOR SENSING CIRCUIT FOR HIGH RESISTANCE** | |
| | 1 Disconnect the ECM electrical connector, PI300. |
| | 2 Measure the resistance between: |

| MAP sensor connector PI29, harness side | ECM connector PI300, harness side |
|---|---|
| Pin 01 | Pin 69 |

| | |
|---|---|
| | Is the resistance greater than 5 ohms?<br>**Yes**<br>REPAIR the high resistance circuit. For additional information, refer to the wiring diagrams. CLEAR the DTC and test the system for normal operation.<br>**No**<br>GO to AD6. |
| **AD6: CHECK THE MAP SENSOR GROUND CIRCUIT FOR HIGH RESISTANCE** | |
| | 1 Measure the resistance between: |

| MAP sensor connector PI29, harness side | ECM connector PI300, harness side |
|---|---|
| Pin 04 | Pin 10 |

| | |
|---|---|
| | Is the resistance greater than 5 ohms?<br>**Yes**<br>REPAIR the high resistance circuit. For additional information, refer to the wiring diagrams. CLEAR the DTC and test the system for normal operation.<br>**No**<br>INSTALL a new MAP sensor.<br>REFER to: Manifold Absolute Pressure (MAP) Sensor (303-14A Electronic Engine Controls - 2.5L/3.0L, Removal and Installation).<br>CLEAR the DTC and test the system for normal operation. |

## PINPOINT TEST AE : ENGINE FUEL TEMPERATURE (EFT) SENSOR CIRCUIT

| TEST CONDITIONS | DETAILS/RESULTS/ACTIONS |
|---|---|
| **AE1: CHECK THE EFT SENSOR SENSING CIRCUIT FOR SHORT CIRCUIT TO GROUND** | |
| | 1 Disconnect the EFT sensor electrical connector, IL09. |
| | 2 Measure the resistance between: |

| EFT sensor connector IL09, harness side | Battery |
|---|---|
| Pin 02 | Negative terminal |

| | |
|---|---|
| | Is the resistance less than 10,000 ohms?<br>**Yes**<br>REPAIR the short circuit. For additional information, refer to the wiring diagrams. CLEAR the DTC and test the system for normal operation.<br>**No**<br>GO to AE2. |
| **AE2: CHECK THE EFT SENSOR SENSING CIRCUIT FOR SHORT CIRCUIT TO POWER** | |

GETtheMANUALS.org

1 Measure the resistance between:

| EFT sensor connector IL09, harness side | Battery |
|---|---|
| Pin 02 | Positive terminal |

Is the resistance less than 10,000 ohms?

**Yes**

REPAIR the short circuit. For additional information, refer to the wiring diagrams. CLEAR the DTC and test the system for normal operation.

**No**

GO to AE3.

**AE3: CHECK THE EFT SENSOR SENSING CIRCUIT FOR HIGH RESISTANCE**

1 Disconnect the ECM electrical connector, PI300.

2 Measure the resistance between:

| EFT sensor connector IL09, harness side | ECM connector PI300, harness side |
|---|---|
| Pin 02 | Pin 46 |

Is the resistance greater than 5 ohms?

**Yes**

REPAIR the high resistance circuit. For additional information, refer to the wiring diagrams. CLEAR the DTC and test the system for normal operation.

**No**

GO to AE4.

**AE4: CHECK THE EFT SENSOR GROUND CIRCUIT FOR HIGH RESISTANCE**

1 Measure the resistance between:

| EFT sensor connector IL09, harness side | ECM connector PI300, harness side |
|---|---|
| Pin 01 | Pin 15 |

Is the resistance greater than 5 ohms?

**Yes**

REPAIR the high resistance circuit. For additional information, refer to the wiring diagrams. CLEAR the DTC and test the system for normal operation.

**No**

INSTALL a new EFT sensor.
REFER to: Fuel Temperature Sensor (303-14A Electronic Engine Controls - 2.5L/3.0L, Removal and Installation).
CLEAR the DTC and test the system for normal operation.

## PINPOINT TEST AF : AIR CONDITIONING (A/C) PRESSURE SENSOR CIRCUIT

| TEST CONDITIONS | DETAILS/RESULTS/ACTIONS |
|---|---|

**AF1: CHECK THE A/C PRESSURE SENSOR POWER SUPPLY CIRCUIT VOLTAGE**

1 Disconnect the A/C pressure sensor electrical connector, FH110.

2 Key on, engine off.

3 Measure the voltage between:

| A/C pressure sensor connector FH110, harness side | Battery |
|---|---|
| Pin 02 | Negative terminal |

Is the voltage less than 4 volts?

**Yes**

REPAIR the 5 volt supply circuit between the A/C pressure sensor and the ECM. For additional information, refer to the wiring diagrams. CLEAR the DTC and test the system for normal operation.

**No**

GO to AF2.

**AF2: CHECK THE A/C PRESSURE SENSOR POWER SUPPLY CIRCUIT FOR SHORT CIRCUIT TO POWER**

1 Key off.

2 Measure the resistance between:

| A/C pressure sensor connector FH110, harness side | Battery |
|---|---|
| Pin 02 | Positive terminal |

Is the resistance less than 10,000 ohms?

**Yes**

REPAIR the short circuit. For additional information, refer to the wiring diagrams. CLEAR the DTC and test the system for normal operation.

**No**

GO to AF3.

**AF3: CHECK THE A/C PRESSURE SENSOR SENSING CIRCUIT FOR SHORT CIRCUIT TO GROUND**

1 Measure the resistance between:

| A/C pressure sensor connector FH110, harness side | Battery |
|---|---|
| Pin 03 | Negative terminal |

Is the resistance less than 10,000 ohms?

**Yes**

REPAIR the short circuit. For additional information, refer to the wiring diagrams. CLEAR the DTC and test the system for normal operation.

**No**

GO to AF4.

**AF4: CHECK THE A/C PRESSURE SENSOR SENSING CIRCUIT FOR SHORT CIRCUIT TO POWER**

1 Measure the resistance between:

| A/C pressure sensor connector FH110, harness side | Battery |
|---|---|
| Pin 03 | Positive terminal |

Is the resistance less than 10,000 ohms?

**Yes**

REPAIR the short circuit. For additional information, refer to the wiring diagrams. CLEAR the DTC and test the system for normal operation.

**No**

GO to AF5.

**AF5: CHECK THE A/C PRESSURE SENSOR SENSING CIRCUIT FOR HIGH RESISTANCE**

1 Disconnect the ECM electrical connector, FH300.

2 Measure the resistance between:

| A/C pressure sensor connector FH110, harness side | ECM connector FH300, harness side |
|---|---|
| Pin 03 | Pin 12 |

GETtheMANUALS.org

Is the resistance greater than 5 ohms?

**Yes**

REPAIR the high resistance circuit. For additional information, refer to the wiring diagrams. CLEAR the DTC and test the system for normal operation.

**No**

GO to AF6.

**AF6: CHECK THE A/C PRESSURE SENSOR GROUND CIRCUIT FOR HIGH RESISTANCE**

1 Measure the resistance between:

| A/C pressure sensor connector FH110, harness side | ECM connector FH300, harness side |
|---|---|
| Pin 01 | Pin 08 |

Is the resistance greater than 5 ohms?

**Yes**

REPAIR the high resistance circuit. For additional information, refer to the wiring diagrams. CLEAR the DTC and test the system for normal operation.

**No**

INSTALL a new A/C pressure sensor.
REFER to: Pressure Cutoff Switch - 2.5L/3.0L/4.2L (412-03 Air Conditioning, Removal and Installation).
CLEAR the DTC and test the system for normal operation.

## PINPOINT TEST AG : INTAKE MANIFOLD TUNING (IMT) VALVE 1 (TOP) CIRCUIT

| TEST CONDITIONS | DETAILS/RESULTS/ACTIONS |
|---|---|

**AG1: CHECK THE IMT VALVE POWER SUPPLY CIRCUIT VOLTAGE**

1 Disconnect the IMT valve electrical connector, PI30.

2 Key on, engine off.

3 Measure the voltage between:

| IMT valve connector PI30, harness side | Battery |
|---|---|
| Pin 01 | Negative terminal |

Is the voltage greater than 10 volts?

**Yes**

GO to AG2.

**No**

REPAIR the circuit between the IMT valve electrical connector and battery. This circuit includes fuse 37 of the front power distribution box and the EMS control relay. For additional information, refer to the wiring diagrams. CLEAR the DTC and test the system for normal operation.

**AG2: CHECK THE IMT VALVE DRIVE CIRCUIT FOR SHORT CIRCUIT TO GROUND**

1 Key off.

2 Measure the resistance between:

| IMT valve connector PI30, harness side | Battery |
|---|---|
| Pin 02 | Negative terminal |

Is the resistance less than 10,000 ohms?

**Yes**

REPAIR the short circuit. For additional information, refer to the wiring diagrams. CLEAR the DTC and test the system for normal operation.

**No**

GO to AG3.

**AG3: CHECK THE IMT VALVE DRIVE CIRCUIT FOR SHORT CIRCUIT TO POWER**

1 Measure the resistance between:

| IMT valve connector PI30, harness side | Battery |
|---|---|
| Pin 02 | Positive terminal |

Is the resistance less than 10,000 ohms?

**Yes**

REPAIR the short circuit. For additional information, refer to the wiring diagrams. CLEAR the DTC and test the system for normal operation.

**No**

GO to AG4.

**AG4: CHECK THE IMT VALVE DRIVE CIRCUIT FOR HIGH RESISTANCE**

1 Disconnect the ECM electrical connector, PI300.

2 Measure the resistance between:

| IMT valve connector PI30, harness side | ECM connector PI300, harness side |
|---|---|
| Pin 02 | Pin 84 |

Is the resistance greater than 5 ohms?

**Yes**

REPAIR the high resistance circuit. For additional information, refer to the wiring diagrams. CLEAR the DTC and test the system for normal operation.

**No**

INSTALL a new IMT valve,
REFER to: Intake Manifold Tuning (IMT) Valve LH (303-14A Electronic Engine Controls - 2.5L/3.0L, Removal and Installation).
CLEAR the DTC and test the system for normal operation.

## PINPOINT TEST AH : INTAKE MANIFOLD TUNING (IMT) VALVE 2 (BOTTOM) CIRCUIT

| TEST CONDITIONS | DETAILS/RESULTS/ACTIONS |
|---|---|

**AH1: CHECK THE IMT VALVE POWER SUPPLY CIRCUIT VOLTAGE**

1 Disconnect the IMT valve electrical connector, PI31.

2 Key on, engine off.

3 Measure the voltage between:

| IMT valve connector PI31, harness side | Battery |
|---|---|
| Pin 01 | Negative terminal |

Is the voltage greater than 10 volts?

**Yes**

GO to AH2.

**No**

GETtheMANUALS.org

REPAIR the circuit between the IMT valve electrical connector and battery. This circuit includes fuse 37 of the front power distribution box and the EMS control relay. For additional information, refer to the wiring diagrams. CLEAR the

DTC and test the system for normal operation.

**AH2: CHECK THE IMT VALVE DRIVE CIRCUIT FOR SHORT CIRCUIT TO GROUND**

1. Key off.
2. Measure the resistance between:

| IMT valve connector PI31, harness side | Battery |
|---|---|
| Pin 02 | Negative terminal |

Is the resistance less than 10,000 ohms?

**Yes**
REPAIR the short circuit. For additional information, refer to the wiring diagrams. CLEAR the DTC and test the system for normal operation.

**No**
GO to AH3.

**AH3: CHECK THE IMT VALVE DRIVE CIRCUIT FOR SHORT CIRCUIT TO POWER**

1. Measure the resistance between:

| IMT valve connector PI31, harness side | Battery |
|---|---|
| Pin 02 | Positive terminal |

Is the resistance less than 10,000 ohms?

**Yes**
REPAIR the short circuit. For additional information, refer to the wiring diagrams. CLEAR the DTC and test the system for normal operation.

**No**
GO to AH4.

**AH4: CHECK THE IMT VALVE DRIVE CIRCUIT FOR HIGH RESISTANCE**

1. Disconnect the ECM electrical connector, PI300.
2. Measure the resistance between:

| IMT valve connector PI31, harness side | ECM connector PI300, harness side |
|---|---|
| Pin 02 | Pin 90 |

Is the resistance greater than 5 ohms?

**Yes**
REPAIR the high resistance circuit. For additional information, refer to the wiring diagrams. CLEAR the DTC and test the system for normal operation.

**No**
INSTALL a new IMT valve,
REFER to: Intake Manifold Tuning (IMT) Valve LH (303-14A Electronic Engine Controls - 2.5L/3.0L, Removal and Installation).
CLEAR the DTC and test the system for normal operation.

## PINPOINT TEST AI : BRAKE SWITCH

| TEST CONDITIONS | DETAILS/RESULTS/ACTIONS |
|---|---|

**AI1: CHECK THE OPERATION OF THE BRAKE SWITCH (PEDAL RELEASED)**

1. Key off.
2. Disconnect the brake switch electrical connector, CA37.
3. Make sure the brake pedal is not pressed.
4. Measure the resistance between:

| Brake switch connector CA37, component side | Brake switch connector CA37, component side |
|---|---|
| Pin 01 | Pin 02 |

Is the resistance greater than 5 ohms?

**Yes**
GO to AI2.

**No**
INSTALL a new brake switch. CLEAR the DTC and test the system for normal operation.

**AI2: CHECK THE OPERATION OF THE BRAKE SWITCH (PEDAL PRESSED)**

1. Press the brake pedal.
2. Measure the resistance between:

| Brake switch connector CA37, component side | Brake switch connector CA37, component side |
|---|---|
| Pin 01 | Pin 02 |

Is the resistance greater than 5 ohms?

**Yes**
INSTALL a new brake switch. CLEAR the DTC and test the system for normal operation.

**No**
GO to AI3.

**AI3: CHECK THE POWER SUPPLY TO THE BRAKE PEDAL SWITCH**

1. Key on, engine off.
2. Measure the voltage between:

| Brake switch connector CA37, harness side | Battery |
|---|---|
| Pin 01 | Negative terminal |

Is the voltage less than 10 volts?

**Yes**
REPAIR the circuit between the brake switch and battery. This circuit includes fuse 35 of the primary junction box. For additional information, refer to the wiring diagrams. CLEAR the DTC and test the system for normal operation.

**No**
GO to AI4.

**AI4: CHECK THE BRAKE SWITCH SIGNAL CIRCUIT FOR SHORT CIRCUIT TO GROUND**

1. Key off.
2. Measure the resistance between:

| Brake switch connector CA37, harness side | Battery |
|---|---|
| Pin 02 | Negative terminal |

Is the resistance less than 10,000 ohms?

**Yes**
REPAIR the short circuit. For additional information, refer to the wiring diagrams. CLEAR the DTC and test the system for normal operation.

**No**
GO to AI5.

GETtheMANUALS.org

**AI5: CHECK THE BRAKE SWITCH SIGNAL CIRCUIT FOR SHORT CIRCUIT TO POWER**

1 Measure the resistance between:

| Brake switch connector CA37, harness side | Battery |
|---|---|
| Pin 02 | Positive terminal |

Is the resistance less than 10,000 ohms?

**Yes**

REPAIR the short circuit. For additional information, refer to the wiring diagrams. CLEAR the DTC and test the system for normal operation.

**No**

GO to AI6.

**AI6: CHECK THE BRAKE SWITCH SIGNAL CIRCUIT FOR HIGH RESISTANCE**

1 Disconnect the ECM electrical connector, FH300.

2 Measure the resistance between:

| Brake switch connector CA37, harness side | ECM connector FH300, harness side |
|---|---|
| Pin 02 | Pin 41 |

Is the resistance greater than 5 ohms?

**Yes**

REPAIR the high resistance circuit. For additional information, refer to the wiring diagrams. CLEAR the DTC and test the system for normal operation.

**No**

REFER to the warranty policy and procedures manual if an ECM is suspect.

## PINPOINT TEST AJ : AIR CONDITIONING (A/C) COMPRESSOR CLUTCH CONTROL CIRCUIT

| TEST CONDITIONS | DETAILS/RESULTS/ACTIONS |
|---|---|

**AJ1: CHECK THE A/C CLUTCH RELAY CONTROL CIRCUIT FOR SHORT CIRCUIT TO GROUND**

1 Remove the A/C clutch relay.

2 Key on, engine off.

3 Measure the resistance between:

| A/C clutch relay base | Battery |
|---|---|
| Pin 02 | Negative terminal |

Is the resistance less than 10,000 ohms?

**Yes**

REPAIR the short circuit. For additional information, refer to the wiring diagrams. CLEAR the DTC and test the system for normal operation.

**No**

GO to AJ2.

**AJ2: CHECK THE A/C CLUTCH RELAY CONTROL CIRCUIT FOR SHORT CIRCUIT TO POWER**

1 Measure the resistance between:

| A/C clutch relay base | Battery |
|---|---|
| Pin 02 | Positive terminal |

Is the resistance less than 10,000 ohms?

**Yes**

REPAIR the short circuit. For additional information, refer to the wiring diagrams. CLEAR the DTC and test the system for normal operation.

**No**

GO to AJ3.

**AJ3: CHECK THE A/C CLUTCH RELAY CONTROL CIRCUIT FOR HIGH RESISTANCE**

1 Disconnect the ECM electrical connector, FH300.

2 Measure the resistance between:

| A/C clutch relay base | ECM connector FH300, harness side |
|---|---|
| Pin 02 | Pin 53 |

Is the resistance greater than 5 ohms?

**Yes**

REPAIR the high resistance circuit. For additional information, refer to the wiring diagrams. CLEAR the DTC and test the system for normal operation.

**No**

INSTALL a new A/C clutch relay. CLEAR the DTC and test the system for normal operation. If the DTC is reset, refer to the warranty policy and procedures manual if an ECM is suspect.

## PINPOINT TEST AK : CLUTCH PEDAL SWITCH

| TEST CONDITIONS | DETAILS/RESULTS/ACTIONS |
|---|---|

**AK1: CHECK THE OPERATION OF THE CLUTCH PEDAL SWITCH (PEDAL RELEASED)**

1 Key off.

2 Disconnect the clutch pedal electrical connector, (right hand drive vehicles) CA285 or (left hand drive vehicles) CA291.

3 Make sure the clutch pedal is not pressed.

4 Measure the resistance between:

**Right hand drive vehicles**

| Clutch pedal switch connector CA285, component side | Clutch pedal switch connector CA285, component side |
|---|---|
| Pin 01 | Pin 02 |

**Left hand drive vehicles**

| Clutch pedal switch connector CA291, component side | Clutch pedal switch connector CA291, component side |
|---|---|
| Pin 01 | Pin 02 |

Is the resistance greater than 5 ohms?

**Yes**

GO to AK2.

**No**

INSTALL a new clutch pedal switch. CLEAR the DTC and test the system for normal operation.

**AK2: CHECK THE OPERATION OF THE CLUTCH PEDAL SWITCH (PEDAL PRESSED)**

1 Press the clutch pedal.

GETtheMANUALS.org

2 Measure the resistance between:

**Right hand drive vehicles**

| Clutch pedal switch connector CA285, component side | Clutch pedal switch connector CA285, component side |
|---|---|
| Pin 01 | Pin 02 |

**Left hand drive vehicles**

| Clutch pedal switch connector CA291, component side | Clutch pedal switch connector CA291, component side |
|---|---|
| Pin 01 | Pin 02 |

Is the resistance greater than 5 ohms?

**Yes**

INSTALL a new clutch pedal switch. CLEAR the DTC and test the system for normal operation.

**No**

GO to AK3.

**AK3: CHECK THE CLUTCH PEDAL SWITCH TO ECM INPUT CIRCUIT FOR SHORT CIRCUIT TO GROUND**

1 Measure the resistance between:

**Right hand drive vehicles**

| Clutch pedal switch connector CA285, harness side | Battery |
|---|---|
| Pin 01 | Negative terminal |

**Left hand drive vehicles**

| Clutch pedal switch connector CA291, harness side | Battery |
|---|---|
| Pin 01 | Negative terminal |

Is the resistance less than 10,000 ohms?

**Yes**

REPAIR the short circuit. For additional information, refer to the wiring diagrams. CLEAR the DTC and test the system for normal operation.

**No**

GO to AK4.

**AK4: CHECK THE CLUTCH PEDAL SWITCH TO ECM INPUT CIRCUIT FOR SHORT CIRCUIT TO POWER**

1 Measure the resistance between:

**Right hand drive vehicles**

| Clutch pedal switch connector CA285, harness side | Battery |
|---|---|
| Pin 01 | Positive terminal |

**Left hand drive vehicles**

| Clutch pedal switch connector CA291, harness side | Battery |
|---|---|
| Pin 01 | Positive terminal |

Is the resistance less than 10,000 ohms?

**Yes**

REPAIR the short circuit. For additional information, refer to the wiring diagrams. CLEAR the DTC and test the system for normal operation.

**No**

GO to AK5.

**AK5: CHECK THE CLUTCH PEDAL SWITCH TO ECM INPUT CIRCUIT FOR HIGH RESISTANCE**

1 Disconnect ECM electrical connector FH300

2 Measure the resistance between:

**Right hand drive vehicles**

| Clutch pedal switch connector CA285, harness side | ECM connector FH300, harness side |
|---|---|
| Pin 01 | Pin 43 |

**Left hand drive vehicles**

| Clutch pedal switch connector CA291, harness side | ECM connector FH300, harness side |
|---|---|
| Pin 01 | Pin 43 |

Is the resistance greater than 5 ohms?

**Yes**

REPAIR the high resistance circuit. For additional information, refer to the wiring diagrams. CLEAR the DTC and test the system for normal operation.

**No**

GO to AK6.

**AK6: CHECK THE CLUTCH PEDAL SWITCH GROUND CIRCUIT FOR HIGH RESISTANCE**

1 Measure the resistance between:

**Right hand drive vehicles**

| Clutch pedal switch connector CA285, harness side | Battery |
|---|---|
| Pin 02 | Negative terminal |

**Left hand drive vehicles**

| Clutch pedal switch connector CA291, harness side | Battery |
|---|---|
| Pin 02 | Negative terminal |

Is the resistance greater than 5 ohms?

**Yes**

REPAIR the high resistance circuit. For additional information, refer to the wiring diagrams. CLEAR the DTC and test the system for normal operation.

**No**

Refer to the warranty policy and procedures manual if an ECM is suspect.

GETtheMANUALS.org

# Electronic Engine Controls - 2.5L NA V6 - AJV6 / 3.0L NA V6 - AJ27 - Electronic Engine ControlsVIN Range: N80181->R99999

Diagnosis and Testing

Overview

There are changes to the engine management system (EMS) for 2006 my, the most obvious of which will be the change to 7-digit diagnostic trouble codes (DTCs) from the familiar 5-digit, plus the addition of secondary air injection and changes to evaporative emissions to comply with stage four emissions requirements.

For more information on these systems,
REFER to: Evaporative Emissions - VIN Range: N52048->N99999 (303-13 Evaporative Emissions, Description and Operation).

## Inspection and Verification

1. **1.** Verify the customer concern.
2. **2.** Visually inspect for obvious signs of mechanical or electrical damage.

**Visual Inspection Chart**

| Mechanical | Electrical |
|---|---|
| • Engine oil level and condition<br>• Cooling system coolant level<br>• Fuel level<br>• Fuel contamination/grade/quality<br>• Throttle body<br>• Poly-vee belt<br>• Air cleaner condition | • Fuses<br>• Wiring harness<br>• Electrical connector(s)<br>• Sensor(s)<br>• Engine control module (ECM)<br>• Transmission control module (TCM) |

3. **3.** Verify the following systems are working correctly:

- Air intake system
- Cooling system
- Charging system
- Fuel charging system
- Ignition system

4. **4.** If an obvious cause for an observed or reported symptom is found, correct the cause (if possible) before proceeding to the next step.
5. **5.** If the cause is not visually evident, use the Jaguar approved diagnostic system or a scan tool to retrieve the fault codes before proceeding to the DTC Index, or the symptom chart if no DTCs are set.

## Symptom Chart

| Symptom (general) | Symptom (specific) | Possible source | Action |
|---|---|---|---|
| Non-Start | Engine does not crank | • Security system /Immobiliser engaged<br>• Engine in shut-down mode<br>• ECM relay<br>• Battery<br>• Park/Neutral switch<br>• Starting system<br>• Harness<br>• Engine seized | Check that the security system is disarmed. Check for DTCs. For ECM relay tests, GO to Pinpoint Test AC. For battery information,<br>REFER to: Battery (414-01 Battery, Mounting and Cables, Diagnosis and Testing).<br>For Park/Neutral tests,<br>REFER to: External Controls (307-05 Automatic Transmission/Transaxle External Controls, Diagnosis and Testing).<br>For starting system,<br>REFER to: Starting System (303-06 Starting System, Diagnosis and Testing).<br>For engine information,<br>REFER to: Engine (303-01A Engine - 2.5L NA V6 - AJV6/3.0L NA V6 - AJ27, Diagnosis and Testing). |
| | Engine cranks, but does not fire | • Engine breather system disconnected/restricted<br>• Ignition system<br>• Fuel system<br>• Harness<br>• Crankshaft position (CKP) sensor<br>• ECM fault | Check the engine breather system,<br>REFER to: Engine Emission Control - VIN Range: N80181->R99999 (303-08A Engine Emission Control - V8 4.2L Petrol/V8 S/C 4.2L Petrol/2.5L NA V6 - AJV6/3.0L NA V6 - AJ27, Diagnosis and Testing).<br>For ignition system tests,<br>REFER to: Engine Ignition - VIN Range: N52048->N99999 (303-07A Engine Ignition - 2.5L NA V6 - AJV6/3.0L NA V6 - AJ27, Diagnosis and Testing).<br>For fuel system,<br>REFER to: Fuel Charging and Controls - VIN Range: N52048->N99999 (303-04A Fuel Charging and Controls - 2.5L NA V6 - AJV6/3.0L NA V6 - AJ27, Diagnosis and Testing).<br>For CKP tests, GO to Pinpoint Test Q. Refer to the warranty policy and procedures manual if an ECM is suspect. |
| | Engine cranks and fires, but will not start | • Evaporative emissions purge valve<br>• Fuel pump<br>• Engine coolant temperature (ECT) sensor<br>• Spark plugs<br>• Check for water ingress into spark plug wells<br>• HT short to ground (tracking) - check rubber boots for | For purge valve tests,<br>REFER to: Evaporative Emissions - VIN Range: N52048->N99999 (303-13 Evaporative Emissions, Diagnosis and Testing).<br>For fuel pump circuit tests,<br>REFER to: Fuel Tank and Lines - V8 4.2L Petrol/V8 S/C 4.2L Petrol/2.5L NA V6 - AJV6/3.0L NA V6 - AJ27, VIN Range: N80181->R99999 (310-01 Fuel Tank and Lines, Diagnosis and Testing).<br>For ECT sensor tests, GO to Pinpoint Test C. For ignition |

GETtheMANUALS.org

| Symptom (general) | Symptom (specific) | Possible source | Action |
|---|---|---|---|
| | | cracks/damage<br>● Ignition coil failure(s)<br>● Harness | system,<br>REFER to: Engine Ignition - VIN Range: N52048->N99999 (303-07A Engine Ignition - 2.5L NA V6 - AJV6/3.0L NA V6 - AJ27, Diagnosis and Testing). |
| Difficult to start | Difficult to start cold | ● Coolant anti-freeze content<br>● Battery<br>● CKP sensor<br>● Fuel pump<br>● ECT sensor<br>● Purge valve | Check the coolant anti-freeze content. For battery information,<br>REFER to: Battery (414-01 Battery, Mounting and Cables, Diagnosis and Testing).<br>For CKP sensor tests, GO to Pinpoint Test Q. Check the fuel pressure,<br>REFER to: Fuel Tank and Lines - V8 4.2L Petrol/V8 S/C 4.2L Petrol/2.5L NA V6 - AJV6/3.0L NA V6 - AJ27, VIN Range: N80181->R99999 (310-01 Fuel Tank and Lines, Diagnosis and Testing).<br>For ECT sensor tests, GO to Pinpoint Test C. For purge valve tests,<br>REFER to: Evaporative Emissions - VIN Range: N52048->N99999 (303-13 Evaporative Emissions, Diagnosis and Testing). |
| | Difficult to start hot<br>Difficult to start after hot soak (vehicle standing after engine has reached operating temperature) | ● Injector leak<br>● Engine fuel temperature (EFT) sensor<br>● Intake air temperature (IAT) sensor<br>● Mass air flow (MAF) sensor<br>● Purge valve<br>● Fuel pump<br>● Ignition system<br>● ECT sensor | For injector information,<br>REFER to: Fuel Injectors (303-04A Fuel Charging and Controls - 2.5L NA V6 - AJV6/3.0L NA V6 - AJ27, Removal and Installation).<br>For EFT sensor tests, GO to Pinpoint Test AE. For IAT sensor tests, GO to Pinpoint Test B. For MAF sensor tests, GO to Pinpoint Test A. For purge valve tests,<br>REFER to: Evaporative Emissions - VIN Range: N52048->N99999 (303-13 Evaporative Emissions, Diagnosis and Testing).<br>For ECT sensor tests, GO to Pinpoint Test C. |
| | Engine cranks too fast/slow | ● Compressions high/low<br>● Battery<br>● Starting system | Check compressions,<br>REFER to: Engine (303-01A Engine - 2.5L NA V6 - AJV6/3.0L NA V6 - AJ27, Diagnosis and Testing).<br>For battery information,<br>REFER to: Battery (414-01 Battery, Mounting and Cables, Diagnosis and Testing).<br>For starting system,<br>REFER to: Starting System (303-06 Starting System, Diagnosis and Testing). |
| Engine stalls | Engine stalls soon after start | ● Breather system disconnected/restricted<br>● ECM relay<br>● Harness<br>● MAF sensor<br>● ECT sensor<br>● Ignition system<br>● Fuel lines<br>● Fuel rail pressure (FRP) sensor<br>● Air filter restricted<br>● Air leakage | Check the engine breather system,<br>REFER to: Engine Emission Control - VIN Range: N80181->R99999 (303-08A Engine Emission Control - V8 4.2L Petrol/V8 S/C 4.2L Petrol/2.5L NA V6 - AJV6/3.0L NA V6 - AJ27, Diagnosis and Testing).<br>For ECM relay tests, GO to Pinpoint Test AC. For MAF sensor tests, GO to Pinpoint Test A. For ECT sensor tests, GO to Pinpoint Test C. For ignition system tests,<br>REFER to: Engine Ignition - VIN Range: N52048->N99999 (303-07A Engine Ignition - 2.5L NA V6 - AJV6/3.0L NA V6 - AJ27, Diagnosis and Testing).<br>Check the fuel lines,<br>REFER to: Fuel Tank and Lines - V8 4.2L Petrol/V8 S/C 4.2L Petrol/2.5L NA V6 - AJV6/3.0L NA V6 - AJ27, VIN Range: N80181->R99999 (310-01 Fuel Tank and Lines, Diagnosis and Testing).<br>For FRP sensor tests, GO to Pinpoint Test Y. For air filter and intake system information,<br>REFER to: Intake Air Distribution and Filtering - VIN Range: N52048->N99999 (303-12A Intake Air Distribution and Filtering - 2.5L NA V6 - AJV6/3.0L NA V6 - AJ27, Diagnosis and Testing). |
| | Engine stalls on overrun | ● ECM relay<br>● Throttle position (TP) sensors | For ECM relay tests, GO to Pinpoint Test AC. For TP sensor tests,GO to Pinpoint Test D. and GO to Pinpoint Test E. |
| | Engine stalls at steady speed | ● ECM relay<br>● CKP sensor<br>● TP sensors<br>● Harness | For ECM relay tests, GO to Pinpoint Test AC. For CKP sensor tests, GO to Pinpoint Test Q. For TP sensor tests, GO to Pinpoint Test D. and GO to Pinpoint Test E. |
| | Engine stalls with speed control enabled | ● ECM relay<br>● Harness | For ECM relay tests, GO to Pinpoint Test AC. |
| | Engine stalls when maneuvering | ● ECM relay<br>● TP sensors<br>● Additional engine loads (PAS, air conditioning, etc)<br>● Transmission malfunction<br>● Controller area network (CAN) network malfunction | For ECM relay tests, GO to Pinpoint Test AC. For TP sensor tests,GO to Pinpoint Test D. and GO to Pinpoint Test E. For accessory drive information,<br>REFER to: Accessory Drive - V8 4.2L Petrol/V8 S/C 4.2L Petrol/2.5L NA V6 - AJV6/3.0L NA V6 - AJ27 (303-05 Accessory Drive, Diagnosis and Testing).<br>For transmission information,<br>REFER to: Diagnostic Strategy - VIN Range: N52048->N99999 (307-01 Automatic Transmission/Transaxle, Diagnosis and Testing).<br>For CAN network tests,<br>REFER to: Communications Network - VIN Range: N52048->N99999 (418-00 Module Communications Network, Diagnosis and Testing). |

GETtheMANUALS.org

| Symptom (general) | Symptom (specific) | Possible source | Action |
|---|---|---|---|
| Poor driveability | Engine hesitates/poor acceleration | • Fuel pump<br>• Fuel pressure<br>• Fuel lines<br>• Injector leak<br>• Air leakage<br>• TP sensors<br>• Throttle motor<br>• Ignition system<br>• HO2 sensors<br>• Transmission malfunction<br>• Restricted pedal travel (carpet, etc)<br>• Accelerator pedal position (APP) sensor | Check the fuel pressure, check the fuel lines,<br>REFER to: Fuel Tank and Lines - V8 4.2L Petrol/V8 S/C 4.2L Petrol/2.5L NA V6 - AJV6/3.0L NA V6 - AJ27, VIN Range: N80181->R99999 (310-01 Fuel Tank and Lines, Diagnosis and Testing).<br>For injector information,<br>REFER to: Fuel Injectors (303-04A Fuel Charging and Controls - 2.5L NA V6 - AJV6/3.0L NA V6 - AJ27, Removal and Installation).<br>For intake system,<br>REFER to: Intake Air Distribution and Filtering - VIN Range: N52048->N99999 (303-12A Intake Air Distribution and Filtering - 2.5L NA V6 - AJV6/3.0L NA V6 - AJ27, Diagnosis and Testing).<br>For TP sensor tests, GO to Pinpoint Test D. and GO to Pinpoint Test E. For throttle motor tests, GO to Pinpoint Test X. For ignition system tests,<br>REFER to: Engine Ignition - VIN Range: N52048->N99999 (303-07A Engine Ignition - 2.5L NA V6 - AJV6/3.0L NA V6 - AJ27, Diagnosis and Testing).<br>Check for DTCs relating to HO2 sensors. Refer to the DTC index for pinpoint tests for DTC set. For transmission information,<br>REFER to: Diagnostic Strategy - VIN Range: N52048->N99999 (307-01 Automatic Transmission/Transaxle, Diagnosis and Testing).<br>Check accelerator pedal travel. For APP sensor tests, GO to Pinpoint Test V. and GO to Pinpoint Test W. |
| | Engine backfires | • Fuel pump<br>• Fuel lines<br>• Air leakage<br>• MAF sensor<br>• HO2 sensors<br>• Ignition system<br>• Sticking variable camshaft timing (VCT) hub<br>• APP sensor | Check the fuel pressure, check the fuel lines,<br>REFER to: Fuel Tank and Lines - V8 4.2L Petrol/V8 S/C 4.2L Petrol/2.5L NA V6 - AJV6/3.0L NA V6 - AJ27, VIN Range: N80181->R99999 (310-01 Fuel Tank and Lines, Diagnosis and Testing).<br>For intake system,<br>REFER to: Intake Air Distribution and Filtering - VIN Range: N52048->N99999 (303-12A Intake Air Distribution and Filtering - 2.5L NA V6 - AJV6/3.0L NA V6 - AJ27, Diagnosis and Testing).<br>For MAF sensor tests, GO to Pinpoint Test A. Check for DTCs relating to HO2 sensors. Refer to the DTC index for pinpoint tests for DTC set. For ignition system tests,<br>REFER to: Engine Ignition - VIN Range: N52048->N99999 (303-07A Engine Ignition - 2.5L NA V6 - AJV6/3.0L NA V6 - AJ27, Diagnosis and Testing).<br>For VCT information,<br>REFER to: Variable Camshaft Timing (VCT) Oil Control Solenoid (303-14A Electronic Engine Controls - 2.5L NA V6 - AJV6/3.0L NA V6 - AJ27, Removal and Installation).<br>For APP sensor tests, GO to Pinpoint Test V. and GO to Pinpoint Test W. |
| | Engine surges | • Fuel pump<br>• Fuel lines<br>• MAF sensor<br>• Harness<br>• TP sensors<br>• Throttle motor<br>• Ignition system | Check the fuel pressure, check the fuel lines,<br>REFER to: Fuel Tank and Lines - V8 4.2L Petrol/V8 S/C 4.2L Petrol/2.5L NA V6 - AJV6/3.0L NA V6 - AJ27, VIN Range: N80181->R99999 (310-01 Fuel Tank and Lines, Diagnosis and Testing).<br>For MAF sensor tests, GO to Pinpoint Test A. For TP sensor tests, GO to Pinpoint Test D. and GO to Pinpoint Test E. For throttle motor tests, GO to Pinpoint Test X. For ignition system tests,<br>REFER to: Engine Ignition - VIN Range: N52048->N99999 (303-07A Engine Ignition - 2.5L NA V6 - AJV6/3.0L NA V6 - AJ27, Diagnosis and Testing). |
| | Engine detonates/knocks | • Knock sensor (KS)/circuit malfunction<br>• Fuel pump<br>• Fuel lines<br>• Fuel quality<br>• FRP sensor<br>• MAF sensor<br>• HO2 sensors<br>• Air leakage<br>• Sticking VCT hub<br>• BARO sensor malfunction (internal ECM fault) | For KS circuit tests, GO to Pinpoint Test O. and GO to Pinpoint Test P. Check the fuel pressure, check the fuel lines,<br>REFER to: Fuel Tank and Lines - V8 4.2L Petrol/V8 S/C 4.2L Petrol/2.5L NA V6 - AJV6/3.0L NA V6 - AJ27, VIN Range: N80181->R99999 (310-01 Fuel Tank and Lines, Diagnosis and Testing).<br>For FRP sensor tests, GO to Pinpoint Test Y. For MAF sensor tests, GO to Pinpoint Test A. Check for DTCs relating to HO2 sensors. Refer to the DTC index for pinpoint tests for DTC set. For intake system,<br>REFER to: Intake Air Distribution and Filtering - VIN Range: N52048->N99999 (303-12A Intake Air Distribution and Filtering - 2.5L NA V6 - AJV6/3.0L NA V6 - AJ27, Diagnosis and Testing).<br>Check DTCs for VCT range/performance fault. For VCT information,<br>REFER to: Engine (303-01A Engine - 2.5L NA V6 - AJV6/3.0L NA V6 - AJ27, Diagnosis and Testing).<br>BARO sensor, refer to the warranty policy and procedures manual if an ECM is suspect. |
| | No throttle response | • APP sensor malfunction<br>• TP sensors<br>• Throttle motor | For APP sensor tests, GO to Pinpoint Test V., and GO to Pinpoint Test W. For TP sensor tests, GO to Pinpoint Test D. and GO to Pinpoint Test E. For throttle motor tests, GO to Pinpoint Test X. |

GETtheMANUALS.org

| Symptom (general) | Symptom (specific) | Possible source | Action |
|---|---|---|---|
| | Speed control inhibited or disabled | • Default mode enabled<br>• Speed control switch<br>• TP sensors<br>• Brake pedal switch<br>• Clutch pedal switch<br>• CAN fault | Check the message center for default messages. For speed control switches,<br>REFER to: Speed Control - VIN Range: N52048->N99999 (310-03 Speed Control, Diagnosis and Testing).<br>For TP sensor tests, GO to Pinpoint Test D. and GO to Pinpoint Test E. For brake pedal switch tests, GO to Pinpoint Test AI. For clutch pedal switch tests, GO to Pinpoint Test AK. For CAN tests,<br>REFER to: Communications Network - VIN Range: N52048->N99999 (418-00 Module Communications Network, Diagnosis and Testing). |
| | Poor throttle response | • APP sensor malfunction<br>• TP sensors<br>• ECT sensor<br>• MAF sensor<br>• Transmission malfunction<br>• Traction control event<br>• Air leakage<br>• Breather system disconnected/restricted | For APP sensor tests, GO to Pinpoint Test V. and GO to Pinpoint Test W. For TP sensor tests, GO to Pinpoint Test D. and GO to Pinpoint Test E. For ECT sensor tests, GO to Pinpoint Test C. For MAF sensor tests, GO to Pinpoint Test A. For transmission information,<br>REFER to: Diagnostic Strategy - VIN Range: N52048->N99999 (307-01 Automatic Transmission/Transaxle, Diagnosis and Testing).<br>For intake system,<br>REFER to: Intake Air Distribution and Filtering - VIN Range: N52048->N99999 (303-12A Intake Air Distribution and Filtering - 2.5L NA V6 - AJV6/3.0L NA V6 - AJ27, Diagnosis and Testing).<br>For breather system information,<br>REFER to: Engine Emission Control - VIN Range: N80181->R99999 (303-08A Engine Emission Control - V8 4.2L Petrol/V8 S/C 4.2L Petrol/2.5L NA V6 - AJV6/3.0L NA V6 - AJ27, Diagnosis and Testing). |
| | Engine defaults, warning light and messages. | • Park/Neutral switch<br>• TP sensors<br>• MAF sensor<br>• ECT sensor<br>• Harness | For Park/Neutral tests,<br>REFER to: External Controls (307-05 Automatic Transmission/Transaxle External Controls, Diagnosis and Testing).<br>For TP sensor tests, GO to Pinpoint Test D. and GO to Pinpoint Test E. For MAF sensor tests, GO to Pinpoint Test A. For ECT sensor tests, GO to Pinpoint Test C. |

## DTC index

• NOTE: Generic scan tools may not read the codes listed, or may read only 5-digit codes. Match the 5 digits from the scan tool to the first 5 digits of the 7-digit code listed to identify the fault (the last 2 digits give extra information read by the manufacturer-approved diagnostic system).

| DTC | Description | Possible causes | Action |
|---|---|---|---|
| C003100 | Left front wheel speed sensor | • Invalid data received from ABS: left front wheel speed signal | REFER to: Anti-Lock Control - Stability Assist - VIN Range: N52207->N99999 (206-09 Anti-Lock Control - Stability Assist, Diagnosis and Testing). |
| C003400 | Right front wheel speed sensor | • Invalid data received from ABS: right front wheel speed signal | REFER to: Anti-Lock Control - Stability Assist - VIN Range: N52207->N99999 (206-09 Anti-Lock Control - Stability Assist, Diagnosis and Testing). |
| C003700 | Left rear wheel speed sensor | • Invalid data received from ABS: left rear wheel speed signal | REFER to: Anti-Lock Control - Stability Assist - VIN Range: N52207->N99999 (206-09 Anti-Lock Control - Stability Assist, Diagnosis and Testing). |
| C003A00 | Right rear wheel speed sensor | • Invalid data received from ABS: right rear wheel speed signal | REFER to: Anti-Lock Control - Stability Assist - VIN Range: N52207->N99999 (206-09 Anti-Lock Control - Stability Assist, Diagnosis and Testing). |
| P001100 | Intake (A) camshaft position timing - over-advanced (right hand bank) | • Cam timing has not been set up correctly<br>• Timing chain has slipped | Check the engine timing,<br>REFER to: Timing Drive Components (303-01A Engine - 2.5L NA V6 - AJV6/3.0L NA V6 - AJ27, In-vehicle Repair). |
| P001200 | Intake (A) camshaft position timing - over-retarded (right hand bank) | • Cam timing has not been set up correctly<br>• Timing chain has slipped | Check the engine timing,<br>REFER to: Timing Drive Components (303-01A Engine - 2.5L NA V6 - AJV6/3.0L NA V6 - AJ27, In-vehicle Repair). |
| P001600 | Crankshaft position (CKP)/Camshaft position (CMP) sensor correlation, right hand bank | • The relative positions of the CKP and CMP teeth are not correct<br>- Sensors incorrectly aligned on rebuild | Reset the sensor positions. REFER to: (303-14A Electronic Engine Controls - 2.5L NA V6 - AJV6/3.0L NA V6 - AJ27)<br>Camshaft Position (CMP) Sensor LH (Removal and Installation),<br>Camshaft Position (CMP) Sensor RH (Removal and Installation),<br>Crankshaft Position (CKP) Sensor (Removal and Installation). |
| P001800 | Crankshaft position (CKP)/Camshaft position (CMP) sensor correlation, left hand bank | • The relative positions of the CKP and CMP teeth are not correct<br>- Sensors incorrectly aligned on rebuild | Reset the sensor positions. REFER to: (303-14A Electronic Engine Controls - 2.5L NA V6 - AJV6/3.0L NA V6 - AJ27)<br>Camshaft Position (CMP) Sensor LH (Removal and Installation),<br>Camshaft Position (CMP) Sensor RH (Removal and Installation),<br>Crankshaft Position (CKP) Sensor (Removal and Installation). |
| P002100 | Intake (A) camshaft position timing - over-advanced (left hand bank) | • Cam timing has not been set up correctly<br>• Timing chain has slipped | Check the engine timing,<br>REFER to: Timing Drive Components (303-01A Engine - 2.5L NA V6 - AJV6/3.0L NA V6 - AJ27, In-vehicle Repair). |

GETtheMANUALS.org

| DTC | Description | Possible causes | Action |
|---|---|---|---|
| P002200 | Intake (A) camshaft position timing - over-retarded (left hand bank) | • Cam timing has not been set up correctly<br>• Timing chain has slipped | Check the engine timing, REFER to: Timing Drive Components (303-01A Engine - 2.5L NA V6 - AJV6/3.0L NA V6 - AJ27, In-vehicle Repair). |
| P002672 | Variable camshaft timing (VCT) control solenoid circuit range/performance (right hand bank) - actuator stuck open | • Oil contamination<br>• VCT oil flow fault<br>• VCT solenoid fault<br>• VCT/Camshaft mechanical failure | For right hand bank VCT solenoid circuit tests, GO to Pinpoint Test AA. |
| P002677 | VCT control solenoid circuit range/performance (right hand bank) - commanded position not reachable | • Oil contamination<br>• VCT oil flow fault<br>• VCT solenoid fault<br>• VCT/Camshaft mechanical failure | For right hand bank VCT solenoid circuit tests, GO to Pinpoint Test AA. |
| P002872 | VCT control solenoid circuit range/performance (left hand bank) - actuator stuck open | • Oil contamination<br>• VCT oil flow fault<br>• VCT solenoid fault<br>• VCT/Camshaft mechanical failure | For left hand bank VCT solenoid circuit tests, GO to Pinpoint Test AB. |
| P002877 | VCT control solenoid circuit range/performance (left hand bank) - commanded position not reachable | • Oil contamination<br>• VCT oil flow fault<br>• VCT solenoid fault<br>• VCT/Camshaft mechanical failure | For left hand bank VCT solenoid circuit tests, GO to Pinpoint Test AB. |
| P003100 | HO2S heater control circuit low (right hand bank) | • HO2S heater power supply circuit: high resistance<br>• HO2S heater control circuit: high resistance<br>• HO2S heater ground circuit(s) fault<br>• HO2S heater failure | For right hand bank HO2S heater circuit tests, GO to Pinpoint Test G. |
| P003200 | HO2S heater control circuit high (right hand bank) | • HO2S heater power supply circuit: high resistance<br>• HO2S heater control circuit: high resistance<br>• HO2S heater ground circuit(s) fault<br>• HO2S heater failure | For right hand bank HO2S heater circuit tests, GO to Pinpoint Test G. |
| P003600 | Catalyst monitor heater control circuit (right hand bank) | • Catalyst monitor sensor heater control circuit: short circuit to ground<br>• Catalyst monitor sensor heater control circuit: high resistance<br>• Catalyst monitor sensor heater failure | For right hand bank catalyst monitor heater circuit tests, GO to Pinpoint Test I. |
| P005100 | HO2S heater control circuit low (left hand bank) | • HO2S heater power supply circuit: high resistance<br>• HO2S heater control circuit: high resistance<br>• HO2S heater ground circuit(s) fault<br>• HO2S heater failure | For left hand bank HO2S heater circuit tests, GO to Pinpoint Test K. |
| P005200 | HO2S heater control circuit high (left hand bank) | • HO2S heater power supply circuit: high resistance<br>• HO2S heater control circuit: high resistance<br>• HO2S heater ground circuit(s) fault<br>• HO2S heater failure | For left hand bank HO2S heater circuit tests, GO to Pinpoint Test K. |
| P005600 | Catalyst monitor heater control circuit (left hand bank) | • Catalyst monitor sensor heater control circuit: short circuit to ground<br>• Catalyst monitor sensor heater control circuit: high resistance<br>• Catalyst monitor sensor heater failure | For left hand bank catalyst monitor heater circuit tests, GO to Pinpoint Test M. |
| P006900 | Manifold absolute pressure (MAP) - Barometric pressure correlation | • MAP sensor failure<br>• BARO sensor failure (internal ECM fault) | For MAP sensor circuit tests, GO to Pinpoint Test AD. Refer to the warranty policy and procedure manual if an ECM is suspect. |
| P007100 | Ambient air temperature sensor range/performance | • Ambient temperature value missing from CAN bus | REFER to: Control Components (412-04 Control Components, Diagnosis and Testing). |
| P007200 | Ambient air temperature sensor circuit low | • Ambient air temperature sensor circuit: high resistance<br>• Ambient air temperature sensor circuit: short circuit to ground | REFER to: Control Components (412-04 Control Components, Diagnosis and Testing). |
| P007300 | Ambient air temperature sensor circuit high | • Ambient air temperature sensor circuit: short circuit to power | REFER to: Control Components (412-04 Control Components, Diagnosis and Testing). |
| P007500 | Variable camshaft timing (VCT) control circuit (right hand bank) | • VCT solenoid valve disconnected<br>• VCT solenoid valve to ECM PWM drive circuit: high resistance<br>• VCT solenoid failure | For right hand bank VCT solenoid circuit tests, GO to Pinpoint Test AA. |

GETmeMANUALS.org

| DTC | Description | Possible causes | Action |
|---|---|---|---|
| P007600 | Variable camshaft timing (VCT) control circuit low (right hand bank) | • VCT solenoid valve disconnected<br>• VCT solenoid valve to ECM PWM drive circuit: short circuit to ground<br>• VCT solenoid failure | For right hand bank VCT solenoid circuit tests, GO to Pinpoint Test AA. |
| P007700 | Variable camshaft timing (VCT) control circuit high (right hand bank) | • VCT solenoid valve disconnected<br>• VCT solenoid valve to ECM PWM drive circuit: short circuit to power<br>• VCT solenoid failure | For right hand bank VCT solenoid circuit tests, GO to Pinpoint Test AA. |
| P008100 | Variable camshaft timing (VCT) control circuit (left hand bank) | • VCT solenoid valve disconnected<br>• VCT solenoid valve to ECM PWM drive circuit: high resistance<br>• VCT solenoid failure | For left hand bank VCT solenoid circuit tests, GO to Pinpoint Test AB. |
| P008200 | Variable camshaft timing (VCT) control circuit low (left hand bank) | • VCT solenoid valve disconnected<br>• VCT solenoid valve to ECM PWM drive circuit: short circuit to ground<br>• VCT solenoid failure | For left hand bank VCT solenoid circuit tests, GO to Pinpoint Test AB. |
| P008300 | Variable camshaft timing (VCT) control circuit high (left hand bank) | • VCT solenoid valve disconnected<br>• VCT solenoid valve to ECM PWM drive circuit: short circuit to power<br>• VCT solenoid failure | For left hand bank VCT solenoid circuit tests, GO to Pinpoint Test AB. |
| P008700 | Fuel rail/system pressure - too low | • Fuel rail pressure (FRP) sensor disconnected<br>• FRP sensor to ECM sensing circuit: high resistance or short circuit to ground<br>• FRP sensor supply circuit: high resistance<br>• FRP sensor failure<br>• Fuel pump failure<br>• Fuel line leak<br>• Restricted fuel line | For FRP sensor circuit tests, GO to Pinpoint Test Y.<br>Check the fuel pressure, check the fuel lines,<br>REFER to: Fuel Tank and Lines - V8 4.2L Petrol/V8 S/C 4.2L Petrol/2.5L NA V6 - AJV6/3.0L NA V6 - AJ27, VIN Range: N80181->R99999 (310-01 Fuel Tank and Lines, Diagnosis and Testing). |
| P008800 | Fuel rail/system pressure - too high | • FRP sensor to ECM wiring (supply/sense): short circuit to each other<br>• FRP sensor to ECM sense circuit: short circuit to power<br>• FRP sensor ground circuit: high resistance<br>• FRP sensor failure<br>• Restricted fuel line<br>• Fuel pump short circuit to battery | For FRP sensor tests, GO to Pinpoint Test Y. Check the fuel pressure, check the fuel lines,<br>REFER to: Fuel Tank and Lines - V8 4.2L Petrol/V8 S/C 4.2L Petrol/2.5L NA V6 - AJV6/3.0L NA V6 - AJ27, VIN Range: N80181->R99999 (310-01 Fuel Tank and Lines, Diagnosis and Testing). |
| P010100 | Mass or volume air flow A circuit range/performance | • Blocked air cleaner<br>• Air intake leak<br>• Engine breather leak<br>• Mass air flow (MAF) sensor to ECM sensing circuit: high resistance, intermittent short circuit to ground<br>• MAF sensor supply circuit: high resistance<br>• Throttle adaption fault (check throttle position voltage at Ignition ON) | For intake system information,<br>REFER to: Intake Air Distribution and Filtering - VIN Range: N52048->N99999 (303-12A Intake Air Distribution and Filtering - 2.5L NA V6 - AJV6/3.0L NA V6 - AJ27, Diagnosis and Testing).<br>Check the engine breather system,<br>REFER to: Engine Emission Control - VIN Range: N80181->R99999 (303-08A Engine Emission Control - V8 4.2L Petrol/V8 S/C 4.2L Petrol/2.5L NA V6 - AJV6/3.0L NA V6 - AJ27, Diagnosis and Testing).<br>For MAF sensor circuit tests, GO to Pinpoint Test A. |
| P010200 | Mass or volume air flow A circuit low input | • MAF sensor supply circuit: high resistance, short circuit to ground<br>• MAF sensor failure | For MAF sensor circuit tests, GO to Pinpoint Test A. |
| P010300 | Mass or volume air flow A circuit high input | • MAF sensor to ECM sensing circuit: short circuit to power<br>• MAF sensor to ECM sensor ground circuit: high resistance<br>• MAF sensor failure | For MAF sensor circuit tests, GO to Pinpoint Test A. |
| P010600 | Manifold absolute pressure (MAP)/BARO sensor range/performance | • Intake manifold air leak (loose or missing component)<br>• MAP sensor to ECM circuit(s) fault<br>• Throttle adaption fault (check throttle position voltage at Ignition ON)<br>• MAP sensor failure | For intake system information,<br>REFER to: Intake Air Distribution and Filtering - VIN Range: N52048->N99999 (303-12A Intake Air Distribution and Filtering - 2.5L NA V6 - AJV6/3.0L NA V6 - AJ27, Diagnosis and Testing).<br>For MAP sensor circuit tests, GO to Pinpoint Test AD. |
| P011123 | Intake air temperature (IAT) sensor circuit range/performance - signal stuck low | • IAT sensor to ECM wiring: high resistance<br>• IAT sensor failure | For IAT sensor circuit tests, GO to Pinpoint Test B. |
| P011124 | IAT sensor circuit range/performance - signal stuck high | • IAT sensor to ECM wiring: high resistance<br>• IAT sensor failure | For IAT sensor circuit tests, GO to Pinpoint Test B. |

GETtheMANUALS.org

| DTC | Description | Possible causes | Action |
|---|---|---|---|
| P011129 | IAT sensor circuit range/performance - signal invalid | • IAT sensor to ECM wiring: high resistance<br>• IAT sensor failure | For IAT sensor circuit tests, GO to Pinpoint Test B. |
| P011200 | IAT sensor circuit low input | • IAT sensor disconnected<br>• IAT sensor to ECM wiring: high resistance<br>• IAT sensor failure | For IAT sensor circuit tests, GO to Pinpoint Test B. |
| P011300 | IAT sensor circuit high input | • IAT sensor to ECM wiring: short circuit to ground<br>• IAT sensor to ECM sensing circuit: short circuit to power<br>• IAT sensor failure | For IAT sensor circuit tests, GO to Pinpoint Test B. |
| P011623 | Engine coolant temperature (ECT) sensor circuit range/performance - signal stuck low | • Low coolant level<br>• ECT sensor to ECM sensing circuit: intermittent high resistance<br>• Engine thermostat failure<br>• ECT sensor failure | For ECT sensor circuit tests, GO to Pinpoint Test C. |
| P011624 | ECT sensor circuit range/performance - signal stuck high | • Low coolant level<br>• ECT sensor to ECM sensing circuit: intermittent high resistance<br>• Engine coolant thermostat failure<br>• ECT sensor failure | For ECT sensor circuit tests, GO to Pinpoint Test C. |
| P011629 | ECT sensor circuit range/performance - signal invalid | • Low coolant level<br>• ECT sensor to ECM sensing circuit: intermittent high resistance<br>• Engine coolant thermostat failure<br>• ECT sensor failure | For ECT sensor circuit tests, GO to Pinpoint Test C. |
| P011700 | ECT sensor circuit low input | • ECT sensor disconnected<br>• ECT sensor to ECM sensing circuit: high resistance, short circuit to power<br>• ECT sensor failure | For ECT sensor circuit tests, GO to Pinpoint Test C. |
| P011800 | ECT sensor 1 circuit high input | • Engine overheat condition/cooling fan failure<br>• ECT sensor to ECM wiring: short circuit to ground<br>• ECT sensor failure | For cooling fan circuit tests, GO to Pinpoint Test T.<br>For ECT sensor circuit tests, GO to Pinpoint Test C. |
| P012100 | Throttle position (TP) sensor circuit range/performance, circuit 1 and 2 | • TP sensor to ECM wiring: high resistance<br>• TP sensor to ECM sensing circuits: (TP 1 or TP 2) short circuit to power<br>• TP sensor failure | For TP sensor circuit 1 tests, GO to Pinpoint Test D.<br>For TP sensor circuit 2 tests, GO to Pinpoint Test E. |
| P012200 | TP sensor circuit 1 low input | • TP sensor to ECM sensing circuit 1: short circuit to ground, high resistance<br>• TP sensor failure | For TP sensor circuit 1 tests, GO to Pinpoint Test D. |
| P012300 | TP sensor circuit 1 low input | • TP sensor to ECM sensing circuit (TP1): short circuit to power<br>• TP sensor failure | For TP sensor circuit 1 tests, GO to Pinpoint Test D. |
| P012500 | Insufficient coolant temp for closed loop fuel control | • Low coolant level<br>• ECT sensor to ECM sensing circuit: intermittent high resistance<br>• Engine thermostat failure<br>• ECT sensor failure | Check the coolant level. For ECT sensor circuit tests, GO to Pinpoint Test C. |
| P012800 | Coolant thermostat (coolant temp below thermostat regulating temperature) | • Contaminated coolant<br>• Engine coolant thermostat failure<br>• ECT sensor failure<br>- ECT sensor DTC may also be flagged | Check the coolant anti-freeze content and condition. Check the thermostat condition and function. Check for ECT sensor DTCs. |
| P01311A | H02 sensor circuit low voltage (right hand bank) | • H02S disconnected<br>• H02S to ECM variable current circuit fault<br>• ECM to HO2S constant current circuit fault<br>• H02S failure | For right hand bank HO2 sensor circuit tests, GO to Pinpoint Test F. and GO to Pinpoint Test G. |
| P01321B | H02 sensor circuit high voltage (right hand bank) | • H02S disconnected<br>• H02S to ECM variable current circuit fault<br>• ECM to HO2S constant current circuit fault<br>• H02S failure | For right hand bank HO2 sensor circuit tests, GO to Pinpoint Test F. and GO to Pinpoint Test G. |
| P013300 | HO2 sensor circuit slow response (right hand bank) | • HO2S to ECM wiring shield high resistance<br>• Exhaust leak<br>• Fuel control system fault<br>• HO2 sensor failure | For right hand bank HO2 sensor circuit tests, GO to Pinpoint Test F. and GO to Pinpoint Test G. |

## Pinpoint Tests

GETtheMANUALS.org

### PINPOINT TEST A : MASS AIR FLOW (MAF) SENSOR CIRCUIT

CAUTION: When probing connectors to take measurements in the course of the pinpoint tests, use the adaptor kit, part number 3548-1358-00.

• NOTE: When performing electrical voltage or resistance tests, always use a digital multimeter (DMM) accurate to 3 decimal places, and with an up-to-date calibration certificate. When testing resistance, always take the resistance of the DMM leads into account.

• NOTE: Check and rectify basic faults before beginning diagnostic routines involving pinpoint tests.

• NOTE: Before commencing this test, check the air filter for blockage, the engine air intake and breather systems for leaks, and the TP sensor for additional DTCs.

| TEST CONDITIONS | DETAILS/RESULTS/ACTIONS |
|---|---|

**A1: CHECK THE MAF SENSOR SUPPLY CIRCUIT VOLTAGE**

• NOTE: Check for DTCs indicating IMT valve and purge valve faults before carrying out the MAF supply voltage pinpoint test.

1 Disconnect the MAF sensor electrical connector, PI14.

2 Key on, engine off.

3 Measure the voltage between:

| MAF sensor connector PI14, harness side | Battery |
|---|---|
| Pin 01 | Negative terminal |

Is the voltage greater than 10 volts?

**Yes**

GO to A2.

**No**

REPAIR the circuit between the MAF sensor electrical connector and the battery. This circuit includes the EMS control relay and fuse 37 of the front power distribution box. For additional information, refer to the wiring diagrams. CLEAR the DTC and test the system for normal operation.

**A2: CHECK THE MAF SENSOR SENSING CIRCUIT FOR SHORT CIRCUIT TO GROUND**

• NOTE: The short to GROUND may be intermittent. Move the wiring to attempt to reproduce the conditions under which the DTC was logged, and visually inspect the harness for any signs of chafing, see "visual inspection chart".

1 Key off.

2 Measure the resistance between:

| MAF sensor connector PI14, harness side | Battery |
|---|---|
| Pin 03 | Negative terminal |

Is the resistance less than 10,000 ohms?

**Yes**

REPAIR the short circuit. For additional information, refer to the wiring diagrams. CLEAR the DTC and test the system for normal operation.

**No**

GO to A3.

**A3: CHECK THE MAF SENSOR SENSING CIRCUIT FOR SHORT CIRCUIT TO POWER**

1 Measure the resistance between:

| MAF sensor connector PI14, harness side | Battery |
|---|---|
| Pin 03 | Positive terminal |

Is the resistance less than 10,000 ohms?

**Yes**

REPAIR the short circuit. For additional information, refer to the wiring diagrams. CLEAR the DTC and test the system for normal operation.

**No**

GO to A4.

**A4: CHECK THE MAF SENSOR GROUND CIRCUIT FOR SHORT CIRCUIT TO POWER**

1 Measure the resistance between:

| MAF sensor connector PI14, harness side | Battery |
|---|---|
| Pin 02 | Positive terminal |

Is the resistance less than 10,000 ohms?

**Yes**

REPAIR the short circuit. For additional information, refer to the wiring diagrams. CLEAR the DTC and test the system for normal operation.

**No**

GO to A5.

**A5: CHECK THE MAF SENSOR SENSING CIRCUIT FOR HIGH RESISTANCE**

1 Disconnect the ECM electrical connector, PI300.

2 Measure the resistance between:

| MAF sensor connector PI14, harness side | ECM connector PI300, harness side |
|---|---|
| Pin 03 | Pin 70 |

Is the resistance greater than 5 ohms?

**Yes**

REPAIR the high resistance circuit. For additional information, refer to the wiring diagrams. CLEAR the DTC and test the system for normal operation.

**No**

GO to A6.

**A6: CHECK THE MAF SENSOR GROUND CIRCUIT FOR HIGH RESISTANCE**

1 Measure the resistance between:

| MAF sensor connector PI14, harness side | ECM connector PI300, harness side |
|---|---|
| Pin 02 | Pin 18 |

Is the resistance greater than 5 ohms?

**Yes**

REPAIR the high resistance circuit. For additional information, refer to the wiring diagrams. CLEAR the DTC and test the system for normal operation.

**No**

INSTALL a new MAF sensor.

REFER to: Mass Air Flow (MAF) Sensor (303-14A Electronic Engine Controls - 2.5L NA V6 - AJV6/3.0L NA V6 - AJ27, Removal and Installation).

CLEAR the DTC and test the system for normal operation.

**PINPOINT TEST B : INTAKE AIR TEMPERATURE (IAT) SENSOR CIRCUIT**

• NOTE: The IAT sensor is integral with the Mass Air Flow sensor.

GETtheMANUALS.org

• NOTE: Before commencing this test, check the air filter for blockage and the engine air intake and breather systems for leaks.
REFER to: Intake Air Distribution and Filtering - VIN Range: N52048->N99999 (303-12A Intake Air Distribution and Filtering - 2.5L NA V6 - AJV6/3.0L NA V6 - AJ27, Diagnosis and Testing).

| TEST CONDITIONS | DETAILS/RESULTS/ACTIONS |
|---|---|
| **B1: CHECK THE IAT SENSOR SENSING CIRCUIT FOR SHORT CIRCUIT TO GROUND** | |
| | 1 Disconnect the MAF sensor electrical connector, PI14. |
| | 2 Measure the resistance between: |

| MAF sensor connector PI14, harness side | Battery |
|---|---|
| Pin 04 | Negative terminal |

| | |
|---|---|
| | Is the resistance less than 10,000 ohms?<br>**Yes**<br>REPAIR the short circuit. For additional information, refer to the wiring diagrams. CLEAR the DTC and test the system for normal operation.<br>**No**<br>GO to B2. |
| **B2: CHECK THE IAT SENSOR SENSING CIRCUIT FOR SHORT CIRCUIT TO POWER** | |
| | 1 Measure the resistance between: |

| MAF sensor connector PI14, harness side | Battery |
|---|---|
| Pin 04 | Positive terminal |

| | |
|---|---|
| | Is the resistance less than 10,000 ohms?<br>**Yes**<br>REPAIR the short circuit. For additional information, refer to the wiring diagrams. CLEAR the DTC and test the system for normal operation.<br>**No**<br>GO to B3. |
| **B3: CHECK THE IAT SENSOR SENSING CIRCUIT FOR HIGH RESISTANCE** | |
| | 1 Disconnect the ECM electrical connector, PI300. |
| | 2 Measure the resistance between: |

| MAF sensor connector PI14, harness side | ECM connector PI300, harness side |
|---|---|
| Pin 04 | Pin 66 |

| | |
|---|---|
| | Is the resistance greater than 5 ohms?<br>**Yes**<br>REPAIR the high resistance circuit. For additional information, refer to the wiring diagrams. CLEAR the DTC and test the system for normal operation.<br>**No**<br>GO to B4. |
| **B4: CHECK THE IAT SENSOR GROUND CIRCUIT FOR HIGH RESISTANCE** | |
| | 1 Measure the resistance between: |

| MAF sensor connector PI14, harness side | ECM connector PI300, harness side |
|---|---|
| Pin 05 | Pin 12 |

| | |
|---|---|
| | Is the resistance greater than 5 ohms?<br>**Yes**<br>REPAIR the high resistance circuit. For additional information, refer to the wiring diagrams. CLEAR the DTC and test the system for normal operation.<br>**No**<br>INSTALL a new MAF sensor.<br>REFER to: Mass Air Flow (MAF) Sensor (303-14A Electronic Engine Controls - 2.5L NA V6 - AJV6/3.0L NA V6 - AJ27, Removal and Installation).<br>CLEAR the DTC and test the system for normal operation. |

## PINPOINT TEST C : ENGINE COOLANT TEMPERATURE (ECT) SENSOR CIRCUIT

• NOTE: Before commencing this test, check the coolant level and condition, check the operation of the thermostat, rectify as necessary.

| TEST CONDITIONS | DETAILS/RESULTS/ACTIONS |
|---|---|
| **C1: CHECK THE ECT SENSOR SENSING CIRCUIT FOR SHORT CIRCUIT TO GROUND** | |
| | 1 Disconnect the ECT sensor electrical connector, PI25. |
| | 2 Measure the resistance between: |

| ECT sensor connector PI25, harness side | Battery |
|---|---|
| Pin 02 | Negative terminal |

| | |
|---|---|
| | Is the resistance less than 10,000 ohms?<br>**Yes**<br>REPAIR the short circuit. For additional information, refer to the wiring diagrams. CLEAR the DTC and test the system for normal operation.<br>**No**<br>GO to C2. |
| **C2: CHECK THE ECT SENSOR SENSING CIRCUIT FOR SHORT CIRCUIT TO POWER** | |
| | 1 Measure the resistance between: |

| ECT sensor connector PI25, harness side | Battery |
|---|---|
| Pin 02 | Positive terminal |

| | |
|---|---|
| | Is the resistance less than 10,000 ohms?<br>**Yes**<br>REPAIR the short circuit. For additional information, refer to the wiring diagrams. CLEAR the DTC and test the system for normal operation.<br>**No**<br>GO to C3. |
| **C3: CHECK THE ECT SENSOR SENSING CIRCUIT FOR HIGH RESISTANCE** | |
| | 1 Disconnect the ECM electrical connector, PI300. |
| | 2 Measure the resistance between: |

| ECT sensor connector PI25, harness side | ECM connector PI300, harness side |
|---|---|
| Pin 02 | Pin 68 |

| | |
|---|---|
| | Is the resistance greater than 5 ohms?<br>**Yes**<br>REPAIR the high resistance circuit. For additional information, refer to the wiring diagrams. CLEAR the DTC and test the system for normal operation.<br>**No** |

GETtheMANUALS.org

GO to C4.

**C4: CHECK THE ECT SENSOR GROUND CIRCUIT FOR HIGH RESISTANCE**

1 Measure the resistance between:

| ECT sensor connector PI25, harness side | ECM connector PI300, harness side |
|---|---|
| Pin 01 | Pin 12 |

Is the resistance greater than 5 ohms?

**Yes**

REPAIR the high resistance circuit. For additional information, refer to the wiring diagrams. CLEAR the DTC and test the system for normal operation.

**No**

INSTALL a new ECT sensor.
REFER to: Engine Coolant Temperature (ECT) Sensor - VIN Range: M45255->N52047 (303-14A Electronic Engine Controls - 2.5L NA V6 - AJV6/3.0L NA V6 - AJ27, Removal and Installation).
CLEAR the DTC. TEST the system for normal operation.

## PINPOINT TEST D : THROTTLE POSITION (TP) SENSOR 1 CIRCUIT

| TEST CONDITIONS | DETAILS/RESULTS/ACTIONS |
|---|---|

**D1: CHECK THE TP SENSOR SUPPLY CIRCUIT VOLTAGE**

1 Disconnect the TP sensor electrical connector, PI26.

2 Key on, engine off.

3 Measure the voltage between:

| TP sensor connector PI26, harness side | Battery |
|---|---|
| Pin 05 | Negative terminal |

Is the voltage less than 4 volts?

**Yes**

REPAIR the 5 volt supply circuit between the TP sensor and the ECM. For additional information, refer to the wiring diagrams. CLEAR the DTC and test the system for normal operation.

**No**

GO to D2.

**D2: CHECK THE TP SENSOR SUPPLY CIRCUIT FOR SHORT CIRCUIT TO POWER**

1 Key off.

2 Measure the resistance between:

| TP sensor connector PI26, harness side | Battery |
|---|---|
| Pin 05 | Positive terminal |

Is the resistance less than 10,000 ohms?

**Yes**

REPAIR the short circuit. For additional information, refer to the wiring diagrams. CLEAR the DTC and test the system for normal operation.

**No**

GO to D3.

**D3: CHECK THE TP SENSOR SENSING CIRCUIT TP1 FOR SHORT CIRCUIT TO GROUND**

1 Measure the resistance between:

| TP sensor connector PI26, harness side | Battery |
|---|---|
| Pin 06 | Negative terminal |

Is the resistance less than 10,000 ohms?

**Yes**

REPAIR the short circuit. For additional information, refer to the wiring diagrams. CLEAR the DTC and test the system for normal operation.

**No**

GO to D4.

**D4: CHECK THE TP SENSOR SENSING CIRCUIT TP1 FOR SHORT CIRCUIT TO POWER**

1 Measure the resistance between:

| TP sensor connector PI26, harness side | Battery |
|---|---|
| Pin 06 | Positive terminal |

Is the resistance less than 10,000 ohms?

**Yes**

REPAIR the short circuit. For additional information, refer to the wiring diagrams. CLEAR the DTC and test the system for normal operation.

**No**

GO to D5.

**D5: CHECK THE TP SENSOR SENSING CIRCUIT TP1 FOR HIGH RESISTANCE**

1 Disconnect the ECM electrical connector, PI300.

2 Measure the resistance between:

| TP sensor connector PI26, harness side | ECM connector PI300, harness side |
|---|---|
| Pin 06 | Pin 65 |

Is the resistance greater than 5 ohms?

**Yes**

REPAIR the high resistance circuit. For additional information, refer to the wiring diagrams. CLEAR the DTC and test the system for normal operation.

**No**

GO to D6.

**D6: CHECK THE TP SENSOR GROUND CIRCUIT FOR HIGH RESISTANCE**

1 Measure the resistance between:

| TP sensor connector PI26, harness side | ECM connector PI300, harness side |
|---|---|
| Pin 03 | Pin 11 |

Is the resistance greater than 5 ohms?

**Yes**

REPAIR the high resistance circuit. For additional information, refer to the wiring diagrams. CLEAR the DTC and test the system for normal operation.

**No**

INSTALL a new TP sensor.
REFER to: Throttle Body - VIN Range: N52048->N99999 (303-04A Fuel Charging and Controls - 2.5L NA V6 - AJV6/3.0L NA V6 - AJ27, Removal and Installation).
CLEAR the DTC and test the system for normal operation.

GETTHEMANUALS.org

## PINPOINT TEST E : THROTTLE POSITION (TP) SENSOR 2 CIRCUIT

| TEST CONDITIONS | DETAILS/RESULTS/ACTIONS |
|---|---|

### E1: CHECK THE TP SENSOR SUPPLY CIRCUIT VOLTAGE

1. Disconnect the TP sensor electrical connector, PI26.
2. Key on, engine off.
3. Measure the voltage between:

| TP sensor connector PI26, harness side | Battery |
|---|---|
| Pin 05 | Negative terminal |

Is the voltage less than 4 volts?

**Yes**
REPAIR the 5 volt supply circuit between the TP sensor and the ECM. For additional information, refer to the wiring diagrams. CLEAR the DTC and test the system for normal operation.

**No**
GO to E2.

### E2: CHECK THE TP SENSOR SUPPLY CIRCUIT FOR SHORT CIRCUIT TO POWER

1. Key off.
2. Measure the resistance between:

| TP sensor connector PI26, harness side | Battery |
|---|---|
| Pin 05 | Positive terminal |

Is the resistance less than 10,000 ohms?

**Yes**
REPAIR the short circuit. For additional information, refer to the wiring diagrams. CLEAR the DTC and test the system for normal operation.

**No**
GO to E3.

### E3: CHECK THE TP SENSOR SENSING CIRCUIT TP2 FOR SHORT CIRCUIT TO GROUND

1. Measure the resistance between:

| TP sensor connector PI26, harness side | Battery |
|---|---|
| Pin 04 | Negative terminal |

Is the resistance less than 10,000 ohms?

**Yes**
REPAIR the short circuit. For additional information, refer to the wiring diagrams. CLEAR the DTC and test the system for normal operation.

**No**
GO to E4.

### E4: CHECK THE TP SENSOR SENSING CIRCUIT TP2 FOR SHORT CIRCUIT TO POWER

1. Measure the resistance between:

| TP sensor connector PI26, harness side | Battery |
|---|---|
| Pin 04 | Positive terminal |

Is the resistance less than 10,000 ohms?

**Yes**
REPAIR the short circuit. For additional information, refer to the wiring diagrams. CLEAR the DTC and test the system for normal operation.

**No**
GO to E5.

### E5: CHECK THE TP SENSOR SENSING CIRCUIT TP2 FOR HIGH RESISTANCE

1. Disconnect the ECM electrical connector, PI300.
2. Measure the resistance between:

| TP sensor connector PI26, harness side | ECM connector PI300, harness side |
|---|---|
| Pin 04 | Pin 67 |

Is the resistance greater than 5 ohms?

**Yes**
REPAIR the high resistance circuit. For additional information, refer to the wiring diagrams. CLEAR the DTC and test the system for normal operation.

**No**
GO to E6.

### E6: CHECK THE TP SENSOR GROUND CIRCUIT FOR HIGH RESISTANCE

1. Measure the resistance between:

| TP sensor connector PI26, harness side | ECM connector PI300, harness side |
|---|---|
| Pin 03 | Pin 11 |

Is the resistance greater than 5 ohms?

**Yes**
REPAIR the high resistance circuit. For additional information, refer to the wiring diagrams. CLEAR the DTC and test the system for normal operation.

**No**
INSTALL a new TP sensor.
REFER to: Throttle Body - VIN Range: N52048->N99999 (303-04A Fuel Charging and Controls - 2.5L NA V6 - AJV6/3.0L NA V6 - AJ27, Removal and Installation).
CLEAR the DTC and test the system for normal operation.

## PINPOINT TEST F : RIGHT-HAND H02S VARIABLE AND CONSTANT CIRCUITS

CAUTION: Under no circumstances must the sensor wiring be cut to facilitate removal, should this prove necessary.

• NOTE: Before commencing this test, check the sensor connections and harness, check for exhaust leaks, (a very small exhaust leak can cause this DTC to flag). See "visual inspection chart" and "possible causes".

| TEST CONDITIONS | DETAILS/RESULTS/ACTIONS |
|---|---|

### F1: CHECK THE H02S VARIABLE CIRCUIT FOR SHORT CIRCUIT TO GROUND

1. Disconnect the H02S electrical connector, PI10.
2. Measure the resistance between:

| H02S connector PI10, harness side | Battery |
|---|---|
| Pin 04 | Negative terminal |

GETtheMANUALS.org

Is the resistance less than 10,000 ohms?

**Yes**

REPAIR the short circuit. For additional information, refer to the wiring diagrams. CLEAR the DTC and test the system for normal operation.

**No**

GO to F2.

**F2: CHECK THE H02S VARIABLE CIRCUIT FOR SHORT CIRCUIT TO POWER**

1 Measure the resistance between:

| H02S connector PI10, harness side | Battery |
|---|---|
| Pin 04 | Positive terminal |

Is the resistance less than 10,000 ohms?

**Yes**

REPAIR the short circuit. For additional information, refer to the wiring diagrams. CLEAR the DTC and test the system for normal operation.

**No**

GO to F3.

**F3: CHECK THE H02S CONSTANT CIRCUIT FOR SHORT CIRCUIT TO GROUND**

1 Measure the resistance between:

| H02S connector PI10, harness side | Battery |
|---|---|
| Pin 03 | Negative terminal |

Is the resistance less than 10,000 ohms?

**Yes**

REPAIR the short circuit. For additional information, refer to the wiring diagrams. CLEAR the DTC and test the system for normal operation.

**No**

GO to F4.

**F4: CHECK THE H02S CONSTANT CIRCUIT FOR SHORT CIRCUIT TO POWER**

1 Measure the resistance between:

| H02S connector PI10, harness side | Battery |
|---|---|
| Pin 03 | Positive terminal |

Is the resistance less than 10,000 ohms?

**Yes**

REPAIR the short circuit. For additional information, refer to the wiring diagrams. CLEAR the DTC and test the system for normal operation.

**No**

GO to F5.

**F5: CHECK THE H02S VARIABLE CIRCUIT FOR HIGH RESISTANCE**

1 Disconnect the ECM electrical connector, PI300.

2 Measure the resistance between:

| H02S connector PI10, harness side | ECM connector PI300, harness side |
|---|---|
| Pin 04 | Pin 28 |

Is the resistance greater than 5 ohms?

**Yes**

REPAIR the high resistance circuit. For additional information, refer to the wiring diagrams. CLEAR the DTC and test the system for normal operation.

**No**

GO to F6.

**F6: CHECK THE H02S CONSTANT CIRCUIT FOR HIGH RESISTANCE**

1 Measure the resistance between:

| H02S connector PI10, harness side | ECM connector PI300, harness side |
|---|---|
| Pin 03 | Pin 29 |

Is the resistance greater than 5 ohms?

**Yes**

REPAIR the high resistance circuit. For additional information, refer to the wiring diagrams. CLEAR the DTC and test the system for normal operation.

**No**

INSTALL a new H02S.

REFER to: Heated Oxygen Sensor (HO2S) (303-14A Electronic Engine Controls - 2.5L NA V6 - AJV6/3.0L NA V6 - AJ27, Removal and Installation).

CLEAR the DTC and test the system for normal operation.

## PINPOINT TEST G : RIGHT-HAND H02S HEATER SUPPLY AND CONTROL CIRCUITS

CAUTION: Under no circumstances must the sensor wiring be cut to facilitate removal, should this prove necessary.

• NOTE: Carry out a visual inspection of the HO2S connectors (integrity of connections may be affected by heat from catalytic converters).

| TEST CONDITIONS | DETAILS/RESULTS/ACTIONS |
|---|---|

**G1: CHECK H02S HEATER POWER SUPPLY CIRCUIT**

1 Disconnect the H02S electrical connector, PI10.

2 Key on, engine off.

3 Make sure the O2S heater relay is engergized.

4 Measure the voltage between:

| H02S connector PI10, harness side | Battery |
|---|---|
| Pin 01 | Negative terminal |

Is the voltage greater than 10 volts?

**Yes**

GO to G2.

**No**

REPAIR the power supply circuit to the H02S heater. This circuit includes the O2S heater relay and fuse 20 of the front power distribution box. For additional information, refer to the wiring diagrams. CLEAR the DTC and test the system for normal operation.

**G2: CHECK H02S HEATER CONTROL CIRCUIT FROM ECM FOR SHORT CIRCUIT TO GROUND**

1 Key off.

2 Measure the resistance between:

GETtheMANUALS.org

| H02S connector PI10, harness side | Battery |
|---|---|
| Pin 02 | Negative terminal |

Is the resistance less than 10,000 ohms?

**Yes**

REPAIR the short circuit. For additional information, refer to the wiring diagrams. CLEAR the DTC and test the system for normal operation.

**No**

GO to G3.

**G3: CHECK H02S HEATER CONTROL CIRCUIT FROM ECM FOR SHORT CIRCUIT TO POWER**

1 Measure the resistance between:

| H02S connector PI10, harness side | Battery |
|---|---|
| Pin 02 | Positive terminal |

Is the resistance less than 10,000 ohms?

**Yes**

REPAIR the short circuit. For additional information, refer to the wiring diagrams. CLEAR the DTC and test the system for normal operation.

**No**

GO to G4.

**G4: CHECK H02S HEATER CONTROL CIRCUIT FROM ECM FOR HIGH RESISTANCE**

1 Disconnect the ECM electrical connector, PI300.

2 Measure the resistance between:

| H02S connector PI10, harness side | ECM connector PI300, harness side |
|---|---|
| Pin 02 | Pin 76 |

Is the resistance greater than 5 ohms?

**Yes**

REPAIR the high resistance circuit. For additional information, refer to the wiring diagrams. CLEAR the DTC and test the system for normal operation.

**No**

INSTALL a new H02S.
REFER to: Heated Oxygen Sensor (HO2S) (303-14A Electronic Engine Controls - 2.5L NA V6 - AJV6/3.0L NA V6 - AJ27, Removal and Installation).
CLEAR the DTC and test the system for normal operation.

## PINPOINT TEST H : RIGHT-HAND CATALYST MONITOR SENSOR SENSING AND GROUND CIRCUITS

CAUTION: Under no circumstances must the sensor wiring be cut to facilitate removal, should this prove necessary.

| TEST CONDITIONS | DETAILS/RESULTS/ACTIONS |
|---|---|

**H1: CHECK THE CATALYST MONITOR SENSOR SENSING CIRCUIT FOR SHORT CIRCUIT TO GROUND**

1 Disconnect the catalyst monitor electrical connector, PI11.

2 Measure the resistance between:

| Catalyst monitor connector PI11, harness side | Battery |
|---|---|
| Pin 04 | Negative terminal |

Is the resistance less than 10,000 ohms?

**Yes**

REPAIR the short circuit. For additional information, refer to the wiring diagrams. CLEAR the DTC and test the system for normal operation.

**No**

GO to H2.

**H2: CHECK THE CATALYST MONITOR SENSOR SENSING CIRCUIT FOR SHORT CIRCUIT TO POWER**

1 Measure the resistance between:

| Catalyst monitor connector PI11, harness side | Battery |
|---|---|
| Pin 04 | Positive terminal |

Is the resistance less than 10,000 ohms?

**Yes**

REPAIR the short circuit. For additional information, refer to the wiring diagrams. CLEAR the DTC and test the system for normal operation.

**No**

GO to H3.

**H3: CHECK THE CATALYST MONITOR SENSOR SENSING CIRCUIT FOR HIGH RESISTANCE**

1 Disconnect the ECM electrical connector, PI300.

2 Measure the resistance between:

| Catalyst monitor connector PI11, harness side | ECM connector PI300, harness side |
|---|---|
| Pin 04 | Pin 40 |

Is the resistance greater than 5 ohms?

**Yes**

REPAIR the high resistance circuit. For additional information, refer to the wiring diagrams. CLEAR the DTC and test the system for normal operation.

**No**

GO to H4.

**H4: CHECK THE CATALYST MONITOR SENSOR GROUND CIRCUIT FOR HIGH RESISTANCE**

1 Measure the resistance between:

| Catalyst monitor connector PI11, harness side | ECM connector PI300, harness side |
|---|---|
| Pin 03 | Pin 22 |

Is the resistance greater than 5 ohms?

**Yes**

REPAIR the high resistance circuit. For additional information, refer to the wiring diagrams. CLEAR the DTC and test the system for normal operation.

**No**

INSTALL a new catalyst monitor sensor.
REFER to: Catalyst Monitor Sensor (303-14A Electronic Engine Controls - 2.5L NA V6 - AJV6/3.0L NA V6 - AJ27, Removal and Installation).
CLEAR the DTC and test the system for normal operation.

## PINPOINT TEST I : RIGHT-HAND CATALYST MONITOR SENSOR SUPPLY AND HEATER CONTROL CIRCUITS

CAUTION: Under no circumstances must the sensor wiring be cut to facilitate removal, should this prove necessary.

GETtheMANUALS.org

• NOTE: Carry out a visual inspection of the HO2S connectors (integrity of connections may be affected by heat from catalytic converters).

| TEST CONDITIONS | DETAILS/RESULTS/ACTIONS |
|---|---|
| **I1: CHECK THE CATALYST MONITOR HEATER POWER SUPPLY CIRCUIT** | |
| | 1 Disconnect the catalyst monitor sensor electrical connector, PI11. |
| | 2 Key on, engine off. |
| | 3 Make sure the O2S heater relay is energized. |
| | 4 Measure the voltage between: |

| Catalyst monitor connector PI11, harness side | Battery |
|---|---|
| Pin 01 | Negative terminal |

| | |
|---|---|
| | Is the voltage greater than 10 volts?<br>**Yes**<br>GO to I2.<br>**No**<br>REPAIR the power supply circuit to the catalyst monitor heater. This circuit includes the O2S heater relay and fuse 20 of the front power distribution box. For additional information, refer to the wiring diagrams. CLEAR the DTC and test the system for normal operation. |
| **I2: CHECK THE CATALYST MONITOR HEATER CONTROL CIRCUIT FOR SHORT CIRCUIT TO GROUND** | |
| | 1 Key off. |
| | 2 Measure the resistance between: |

| Catalyst monitor connector PI11, harness side | Battery |
|---|---|
| Pin 02 | Negative terminal |

| | |
|---|---|
| | Is the resistance less than 10,000 ohms?<br>**Yes**<br>REPAIR the short circuit. For additional information, refer to the wiring diagrams. CLEAR the DTC and test the system for normal operation.<br>**No**<br>GO to I3. |
| **I3: CHECK THE CATALYST MONITOR HEATER CONTROL CIRCUIT FOR SHORT CIRCUIT TO POWER** | |
| | 1 Measure the resistance between: |

| Catalyst monitor connector PI11, harness side | Battery |
|---|---|
| Pin 02 | Positive terminal |

| | |
|---|---|
| | Is the resistance less than 10,000 ohms?<br>**Yes**<br>REPAIR the short circuit. For additional information, refer to the wiring diagrams. CLEAR the DTC and test the system for normal operation.<br>**No**<br>GO to I4. |
| **I4: CHECK THE CATALYST MONITOR HEATER CONTROL CIRCUIT FOR HIGH RESISTANCE** | |
| | 1 Disconnect the ECM electrical connector, PI300. |
| | 2 Measure the resistance between: |

| Catalyst monitor connector PI11, harness side | ECM connector PI300, harness side |
|---|---|
| Pin 02 | Pin 88 |

| | |
|---|---|
| | Is the resistance greater than 5 ohms?<br>**Yes**<br>REPAIR the high resistance circuit. For additional information, refer to the wiring diagrams. CLEAR the DTC and test the system for normal operation.<br>**No**<br>INSTALL a new catalyst monitor sensor.<br>REFER to: Catalyst Monitor Sensor (303-14A Electronic Engine Controls - 2.5L NA V6 - AJV6/3.0L NA V6 - AJ27, Removal and Installation).<br>CLEAR the DTC and test the system for normal operation. If the DTC is repeated, refer to the warranty policy and procedures manual if an ECM is suspect. |

## PINPOINT TEST J : LEFT-HAND H02S VARIABLE AND CONSTANT CIRCUITS

CAUTION: Under no circumstances must the sensor wiring be cut to facilitate removal, should this prove necessary.

• NOTE: Before commencing this test, check the sensor connections and harness, check for exhaust leaks, (a very small exhaust leak can cause this DTC to flag). See "visual inspection chart" and "possible causes".

| TEST CONDITIONS | DETAILS/RESULTS/ACTIONS |
|---|---|
| **J1: CHECK THE H02S VARIABLE CIRCUIT FOR SHORT CIRCUIT TO GROUND** | |
| | 1 Disconnect the H02S electrical connector, PI12. |
| | 2 Measure the resistance between: |

| H02S connector PI12, harness side | Battery |
|---|---|
| Pin 04 | Negative terminal |

| | |
|---|---|
| | Is the resistance less than 10,000 ohms?<br>**Yes**<br>REPAIR the short circuit. For additional information, refer to the wiring diagrams. CLEAR the DTC and test the system for normal operation.<br>**No**<br>GO to J2. |
| **J2: CHECK THE H02S VARIABLE CIRCUIT FOR SHORT TO CIRCUIT TO POWER** | |
| | 1 Measure the resistance between: |

| H02S connector PI12, harness side | Battery |
|---|---|
| Pin 04 | Positive terminal |

| | |
|---|---|
| | Is the resistance less than 10,000 ohms?<br>**Yes**<br>REPAIR the short circuit. For additional information, refer to the wiring diagrams. CLEAR the DTC and test the system for normal operation.<br>**No**<br>GO to J3. |
| **J3: CHECK THE H02S CONSTANT CIRCUIT FOR SHORT CIRCUIT TO GROUND** | |
| | 1 Measure the resistance between: |

| H02S connector PI12, harness side | Battery |
|---|---|
| Pin 03 | Negative terminal |

OETWeMANUALS.org

Is the resistance less than 10,000 ohms?

**Yes**

REPAIR the short circuit. For additional information, refer to the wiring diagrams. CLEAR the DTC and test the system for normal operation.

**No**

GO to J4.

**J4: CHECK THE H02S CONSTANT CIRCUIT FOR SHORT TO CIRCUIT TO POWER**

1 Measure the resistance between:

| H02S connector PI12, harness side | Battery |
|---|---|
| Pin 03 | Positive terminal |

Is the resistance less than 10,000 ohms?

**Yes**

REPAIR the short circuit. For additional information, refer to the wiring diagrams. CLEAR the DTC and test the system for normal operation.

**No**

GO to J5.

**J5: CHECK THE H02S VARIABLE CIRCUIT FOR HIGH RESISTANCE**

1 Disconnect the ECM electrical connector, PI300.

2 Measure the resistance between:

| H02S connector PI12, harness side | ECM connector PI300, harness side |
|---|---|
| Pin 04 | Pin 26 |

Is the resistance greater than 5 ohms?

**Yes**

REPAIR the high resistance circuit. For additional information, refer to the wiring diagrams. CLEAR the DTC and test the system for normal operation.

**No**

GO to J6.

**J6: CHECK THE H02S CONSTANT CIRCUIT FOR HIGH RESISTANCE**

1 Measure the resistance between:

| H02S connector PI12, harness side | ECM connector PI300, harness side |
|---|---|
| Pin 03 | Pin 27 |

Is the resistance greater than 5 ohms?

**Yes**

REPAIR the high resistance circuit. For additional information, refer to the wiring diagrams. CLEAR the DTC and test the system for normal operation.

**No**

INSTALL a new H02S.

REFER to: Heated Oxygen Sensor (HO2S) (303-14A Electronic Engine Controls - 2.5L NA V6 - AJV6/3.0L NA V6 - AJ27, Removal and Installation).

CLEAR the DTC and test the system for normal operation. If the DTC is repeated, refer to the warranty policy and procedures manual if an ECM is suspect.

## PINPOINT TEST K : LEFT-HAND H02S HEATER SUPPLY AND CONTROL CIRCUITS

CAUTION: Under no circumstances must the sensor wiring be cut to facilitate removal, should this prove necessary.

• NOTE: Carry out a visual inspection of the HO2S connectors (integrity of connections may be affected by heat from catalytic converters).

| TEST CONDITIONS | DETAILS/RESULTS/ACTIONS |
|---|---|

**K1: CHECK H02S HEATER POWER SUPPLY CIRCUIT**

1 Disconnect the H02S electrical connector, PI12.

2 Key on, engine off.

3 Make sure the O2S heater relay is energized.

4 Measure the voltage between:

| H02S connector PI12, harness side | Battery |
|---|---|
| Pin 01 | Negative terminal |

Is the voltage greater than 10 volts?

**Yes**

GO to K2.

**No**

REPAIR the power supply circuit to the H02S heater. This circuit includes the O2S heater relay and fuse 35 of the front power distribution box. For additional information, refer to the wiring diagrams. CLEAR the DTC and test the system for normal operation.

**K2: CHECK H02S HEATER CONTROL CIRCUIT FROM ECM FOR SHORT CIRCUIT TO GROUND**

1 Key off.

2 Measure the resistance between:

| H02S connector PI12, harness side | Battery |
|---|---|
| Pin 02 | Negative terminal |

Is the resistance less than 10,000 ohms?

**Yes**

REPAIR the short circuit. For additional information, refer to the wiring diagrams. CLEAR the DTC and test the system for normal operation.

**No**

GO to K3.

**K3: CHECK H02S HEATER CONTROL CIRCUIT FROM ECM FOR SHORT CIRCUIT TO POWER**

1 Measure the resistance between:

| H02S connector PI12, harness side | Battery |
|---|---|
| Pin 02 | Positive terminal |

Is the resistance less than 10,000 ohms?

**Yes**

REPAIR the short circuit. For additional information, refer to the wiring diagrams. CLEAR the DTC and test the system for normal operation.

**No**

GO to K4.

**K4: CHECK H02S HEATER CONTROL CIRCUIT FROM ECM FOR HIGH RESISTANCE**

1 Disconnect the ECM electrical connector, PI300.

GETFREEMANUALS.org

| | |
|---|---|
| | 2 Measure the resistance between: |

| H02S connector PI12, harness side | ECM connector PI300, harness side |
|---|---|
| Pin 02 | Pin 77 |

Is the resistance greater than 5 ohms?

**Yes**

REPAIR the high resistance circuit. For additional information, refer to the wiring diagrams. CLEAR the DTC and test the system for normal operation.

**No**

INSTALL a new H02S.
REFER to: Heated Oxygen Sensor (HO2S) (303-14A Electronic Engine Controls - 2.5L NA V6 - AJV6/3.0L NA V6 - AJ27, Removal and Installation).
CLEAR the DTC and test the system for normal operation. If the DTC is repeated, refer to the warranty policy and procedures manual if an ECM is suspect.

## PINPOINT TEST L : LEFT-HAND CATALYST MONITOR SENSOR SENSING AND GROUND CIRCUITS

CAUTION: Under no circumstances must the sensor wiring be cut to facilitate removal, should this prove necessary.

| TEST CONDITIONS | DETAILS/RESULTS/ACTIONS |
|---|---|

### L1: CHECK THE CATALYST MONITOR SENSOR SENSING CIRCUIT FOR SHORT CIRCUIT TO GROUND

1 Disconnect the catalyst monitor electrical connector, PI13.

2 Measure the resistance between:

| Catalyst monitor connector PI13, harness side | Battery |
|---|---|
| Pin 04 | Negative terminal |

Is the resistance less than 10,000 ohms?

**Yes**

REPAIR the short circuit. For additional information, refer to the wiring diagrams. CLEAR the DTC and test the system for normal operation.

**No**

GO to L2.

### L2: CHECK THE CATALYST MONITOR SENSOR SENSING CIRCUIT FOR SHORT CIRCUIT TO POWER

1 Measure the resistance between:

| Catalyst monitor connector PI13, harness side | Battery |
|---|---|
| Pin 04 | Positive terminal |

Is the resistance less than 10,000 ohms?

**Yes**

REPAIR the short circuit. For additional information, refer to the wiring diagrams. CLEAR the DTC and test the system for normal operation.

**No**

GO to L3.

### L3: CHECK THE CATALYST MONITOR SENSOR SENSING CIRCUIT FOR HIGH RESISTANCE

1 Disconnect the ECM electrical connector, PI300.

2 Measure the resistance between:

| Catalyst monitor connector PI13, harness side | ECM connector PI300, harness side |
|---|---|
| Pin 04 | Pin 41 |

Is the resistance greater than 5 ohms?

**Yes**

REPAIR the high resistance circuit. For additional information, refer to the wiring diagrams. CLEAR the DTC and test the system for normal operation.

**No**

GO to L4.

### L4: CHECK THE CATALYST MONITOR SENSOR GROUND CIRCUIT FOR HIGH RESISTANCE

1 Measure the resistance between:

| Catalyst monitor connector PI13, harness side | ECM connector PI300, harness side |
|---|---|
| Pin 03 | Pin 45 |

Is the resistance greater than 5 ohms?

**Yes**

REPAIR the high resistance circuit. For additional information, refer to the wiring diagrams. CLEAR the DTC and test the system for normal operation.

**No**

INSTALL a new catalyst monitor sensor.
REFER to: Catalyst Monitor Sensor (303-14A Electronic Engine Controls - 2.5L NA V6 - AJV6/3.0L NA V6 - AJ27, Removal and Installation).
CLEAR the DTC and test the system for normal operation.

## PINPOINT TEST M : LEFT-HAND CATALYST MONITOR SENSOR SUPPLY AND HEATER CONTROL CIRCUITS

CAUTION: Under no circumstances must the sensor wiring be cut to facilitate removal, should this prove necessary.

• NOTE: Carry out a visual inspection of the HO2S connectors (integrity of connections may be affected by heat from catalytic converters)

| TEST CONDITIONS | DETAILS/RESULTS/ACTIONS |
|---|---|

### M1: CHECK THE CATALYST MONITOR HEATER POWER SUPPLY CIRCUIT

1 Disconnect the catalyst monitor sensor electrical connector, PI13.

2 Key on, engine off.

3 Make sure the O2S heater relay is energized.

4 Measure the voltage between:

| Catalyst monitor connector PI13, harness side | Battery |
|---|---|
| Pin 01 | Negative terminal |

Is the voltage greater than 10 volts?

**Yes**

GO to M2.

**No**

REPAIR the power supply circuit to the catalyst monitor heater. This circuit includes the O2S heater relay and fuse 35 of the front power distribution box. For additional information, refer to the wiring diagrams. CLEAR the DTC and test the system for normal operation.

GETthemANUALS.org

### M2: CHECK THE CATALYST MONITOR HEATER CONTROL CIRCUIT FOR SHORT CIRCUIT TO GROUND

1 Key off.

2 Measure the resistance between:

| Catalyst monitor connector PI13, harness side | Battery |
|---|---|
| Pin 02 | Negative terminal |

Is the resistance less than 10,000 ohms?

**Yes**

REPAIR the short circuit. For additional information, refer to the wiring diagrams. CLEAR the DTC and test the system for normal operation.

**No**

GO to M3.

**M3: CHECK THE CATALYST MONITOR HEATER CONTROL CIRCUIT FOR SHORT CIRCUIT TO POWER**

1 Measure the resistance between:

| Catalyst monitor connector PI13, harness side | Battery |
|---|---|
| Pin 02 | Positive terminal |

Is the resistance less than 10,000 ohms?

**Yes**

REPAIR the short circuit. For additional information, refer to the wiring diagrams. CLEAR the DTC and test the system for normal operation.

**No**

GO to M4.

**M4: CHECK THE CATALYST MONITOR SENSOR HEATER CONTROL CIRCUIT FOR HIGH RESISTANCE**

1 Disconnect the ECM electrical connector, PI300.

2 Measure the resistance between:

| Catalyst monitor connector PI13, harness side | ECM connector PI300, harness side |
|---|---|
| Pin 02 | Pin 89 |

Is the resistance greater than 5 ohms?

**Yes**

REPAIR the high resistance circuit. For additional information, refer to the wiring diagrams. CLEAR the DTC and test the system for normal operation.

**No**

INSTALL a new catalyst monitor sensor.
REFER to: Catalyst Monitor Sensor (303-14A Electronic Engine Controls - 2.5L NA V6 - AJV6/3.0L NA V6 - AJ27, Removal and Installation).
CLEAR the DTC and test the system for normal operation.

## PINPOINT TEST N : ENGINE OIL TEMPERATURE (EOT) SENSOR CIRCUIT

| TEST CONDITIONS | DETAILS/RESULTS/ACTIONS |
|---|---|

**N1: CHECK THE EOT SENSOR SENSING CIRCUIT FOR SHORT CIRCUIT TO GROUND**

1 Disconnect the EOT sensor electrical connector, PI24.

2 Measure the resistance between:

| EOT sensor connector PI24, harness side | Battery |
|---|---|
| Pin 02 | Negative terminal |

Is the resistance less than 10,000 ohms?

**Yes**

REPAIR the short circuit. For additional information, refer to the wiring diagrams. CLEAR the DTC and test the system for normal operation.

**No**

GO to N2.

**N2: CHECK THE EOT SENSOR SENSING CIRCUIT FOR SHORT CIRCUIT TO POWER**

1 Measure the resistance between:

| EOT sensor connector PI24, harness side | Battery |
|---|---|
| Pin 02 | Positive terminal |

Is the resistance less than 10,000 ohms?

**Yes**

REPAIR the short circuit. For additional information, refer to the wiring diagrams. CLEAR the DTC and test the system for normal operation.

**No**

GO to N3.

**N3: CHECK THE EOT SENSOR SENSING CIRCUIT FOR HIGH RESISTANCE**

1 Disconnect the ECM electrical connector, PI300.

2 Measure the resistance between:

| EOT sensor connector PI24, harness side | ECM connector PI300, harness side |
|---|---|
| Pin 02 | Pin 23 |

Is the resistance greater than 5 ohms?

**Yes**

REPAIR the high resistance circuit. For additional information, refer to the wiring diagrams. CLEAR the DTC and test the system for normal operation.

**No**

GO to N4.

**N4: CHECK THE EOT SENSOR GROUND CIRCUIT FOR HIGH RESISTANCE**

1 Measure the resistance between:

| EOT sensor connector PI24, harness side | ECM connector PI300, harness side |
|---|---|
| Pin 01 | Pin 10 |

Is the resistance greater than 5 ohms?

**Yes**

REPAIR the high resistance circuit. This circuit includes harness splice, PIS49. For additional information, refer to the wiring diagrams. CLEAR the DTC and test the system for normal operation.

**No**

INSTALL a new EOT sensor.
REFER to: Oil Temperature Sensor (303-14A Electronic Engine Controls - 2.5L NA V6 - AJV6/3.0L NA V6 - AJ27, Removal and Installation).
CLEAR the DTC and test the system for normal operation. If the DTC is repeated, refer to the warranty policy and procedures manual if an ECM is suspect.

GETtheMANUALS.org

## PINPOINT TEST O : RIGHT-HAND KNOCK SENSOR (KS) CIRCUIT

• NOTE: Before commencing this test, make sure that the sensor is making a good electrical contact with the cylinder block. See "possible causes".

| TEST CONDITIONS | DETAILS/RESULTS/ACTIONS |
|---|---|
| **O1: CHECK KS SENSING CIRCUIT FOR SHORT CIRCUIT TO GROUND** | |
| | 1 Disconnect the KS electrical connector, PI43. |
| | 2 Measure the resistance between: |

| KS connector PI43, harness side | Battery |
|---|---|
| Pin 01 | Negative terminal |

| | |
|---|---|
| | Is the resistance less than 10,000 ohms?<br>**Yes**<br>REPAIR the short circuit. For additional information, refer to the wiring diagrams. CLEAR the DTC and test the system for normal operation.<br>**No**<br>GO to O2. |
| **O2: CHECK KS SENSING CIRCUIT FOR SHORT CIRCUIT TO POWER** | |
| | 1 Measure the resistance between: |

| KS connector PI43, harness side | Battery |
|---|---|
| Pin 01 | Positive terminal |

| | |
|---|---|
| | Is the resistance less than 10,000 ohms?<br>**Yes**<br>REPAIR the short circuit. For additional information, refer to the wiring diagrams. CLEAR the DTC and test the system for normal operation.<br>**No**<br>GO to O3. |
| **O3: CHECK KS SENSING CIRCUIT FOR HIGH RESISTANCE** | |
| | 1 Disconnect the ECM electrical connector, PI300. |
| | 2 Measure the resistance between: |

| KS connector PI43, harness side | ECM connector PI300, harness side |
|---|---|
| Pin 01 | Pin 42 |

| | |
|---|---|
| | Is the resistance greater than 5 ohms?<br>**Yes**<br>REPAIR the high resistance circuit. For additional information, refer to the wiring diagrams. CLEAR the DTC and test the system for normal operation.<br>**No**<br>GO to O4. |
| **O4: CHECK KS GROUND CIRCUIT FOR HIGH RESISTANCE** | |
| | 1 Measure the resistance between: |

| KS connector PI43, harness side | ECM connector PI300, harness side |
|---|---|
| Pin 02 | Pin 19 |

| | |
|---|---|
| | Is the resistance greater than 5 ohms?<br>**Yes**<br>REPAIR the high resistance circuit. For additional information, refer to the wiring diagrams. CLEAR the DTC and test the system for normal operation.<br>**No**<br>INSTALL a new KS.<br>REFER to: Knock Sensor (KS) RH (303-14A Electronic Engine Controls - 2.5L NA V6 - AJV6/3.0L NA V6 - AJ27, Removal and Installation).<br>CLEAR the DTC and test the system for normal operation. |

## PINPOINT TEST P : LEFT-HAND KNOCK SENSOR (KS) CIRCUIT

• NOTE: Before commencing this test, make sure that the sensor is making a good electrical contact with the cylinder block. See "possible causes".

| TEST CONDITIONS | DETAILS/RESULTS/ACTIONS |
|---|---|
| **P1: CHECK KS SENSING CIRCUIT FOR SHORT CIRCUIT TO GROUND** | |
| | 1 Disconnect the KS electrical connector, PI44. |
| | 2 Measure the resistance between: |

| KS connector PI44, harness side | Battery |
|---|---|
| Pin 01 | Negative terminal |

| | |
|---|---|
| | Is the resistance less than 10,000 ohms?<br>**Yes**<br>REPAIR the short circuit. For additional information, refer to the wiring diagrams. CLEAR the DTC and test the system for normal operation.<br>**No**<br>GO to P2. |
| **P2: CHECK KS SENSING CIRCUIT FOR SHORT CIRCUIT TO POWER** | |
| | 1 Measure the resistance between: |

| KS connector PI44, harness side | Battery |
|---|---|
| Pin 01 | Positive terminal |

| | |
|---|---|
| | Is the resistance less than 10,000 ohms?<br>**Yes**<br>REPAIR the short circuit. For additional information, refer to the wiring diagrams. CLEAR the DTC and test the system for normal operation.<br>**No**<br>GO to P3. |
| **P3: CHECK KS SENSING CIRCUIT FOR HIGH RESISTANCE** | |
| | 1 Disconnect the ECM electrical connector, PI300. |
| | 2 Measure the resistance between: |

| KS connector PI44, harness side | ECM connector PI300, harness side |
|---|---|
| Pin 01 | Pin 43 |

| | |
|---|---|
| | Is the resistance greater than 5 ohms?<br>**Yes**<br>REPAIR the high resistance circuit. For additional information, refer to the wiring diagrams. CLEAR the DTC and test the system for normal operation.<br>**No** |

GETtheMANUALS.org

GO to P4.

**P4: CHECK KS GROUND CIRCUIT FOR HIGH RESISTANCE**

1 Measure the resistance between:

| KS connector PI44, harness side | ECM connector PI300, harness side |
|---|---|
| Pin 02 | Pin 20 |

Is the resistance greater than 5 ohms?

**Yes**

REPAIR the high resistance circuit. For additional information, refer to the wiring diagrams. CLEAR the DTC and test the system for normal operation.

**No**

INSTALL a new KS.
REFER to: Knock Sensor (KS) LH (303-14A Electronic Engine Controls - 2.5L NA V6 - AJV6/3.0L NA V6 - AJ27, Removal and Installation).
CLEAR the DTC and test the system for normal operation.

## PINPOINT TEST Q : CRANKSHAFT POSITION (CKP) SENSOR CIRCUIT

• NOTE: The clearance between the CKP sensor and the reluctor ring should be checked at 90° intervals. The air gap between the two should be no greater than 4.5 mm at any point.

| TEST CONDITIONS | DETAILS/RESULTS/ACTIONS |
|---|---|

**Q1: CHECK THE CKP SENSOR FOR CORRECT INSTALLATION**

1 Check the CKP sensor for correct installation.

Is the CKP sensor correctly installed?

**Yes**

GO to Q2.

**No**

INSTALL the CKP sensor correctly.
REFER to: Crankshaft Position (CKP) Sensor (303-14A Electronic Engine Controls - 2.5L NA V6 - AJV6/3.0L NA V6 - AJ27, Removal and Installation).
Reconnect the sensor. CLEAR the DTCs and test the system for normal operation.

**Q2: CHECK THE CKP SENSOR FOR DEBRIS**

1 Remove the CKP sensor and inspect for debris.

Is the CKP sensor free of debris?

**Yes**

GO to Q3.

**No**

CLEAN the sensor and wheel. INSTALL the sensor.
REFER to: Crankshaft Position (CKP) Sensor (303-14A Electronic Engine Controls - 2.5L NA V6 - AJV6/3.0L NA V6 - AJ27, Removal and Installation).
Reconnect the sensor. CLEAR the DTCs and test the system for normal operation.

**Q3: CHECK THE CKP SENSOR SENSING CIRCUIT FOR SHORT CIRCUIT TO GROUND**

1 Disconnect the CKP sensor electrical connector, PI21.

2 Measure the resistance between:

| CKP sensor connector PI21, harness side | Battery |
|---|---|
| Pin 02 | Negative terminal |

Is the resistance less than 10,000 ohms?

**Yes**

REPAIR the short circuit. For additional information, refer to the wiring diagrams. CLEAR the DTC and test the system for normal operation.

**No**

GO to Q4.

**Q4: CHECK THE CKP SENSOR SENSING CIRCUIT FOR SHORT CIRCUIT TO POWER**

1 Measure the resistance between:

| CKP sensor connector PI21, harness side | Battery |
|---|---|
| Pin 02 | Positive terminal |

Is the resistance less than 10,000 ohms?

**Yes**

REPAIR the short circuit. For additional information, refer to the wiring diagrams. CLEAR the DTC and test the system for normal operation.

**No**

GO to Q5.

**Q5: CHECK THE CKP SENSOR SENSING CIRCUIT FOR HIGH RESISTANCE**

1 Disconnect the ECM electrical connector, PI300.

2 Measure the resistance between:

| CKP sensor connector PI21, harness side | ECM connector PI300, harness side |
|---|---|
| Pin 02 | Pin 30 |

Is the resistance greater than 5 ohms?

**Yes**

REPAIR the high resistance circuit. For additional information, refer to the wiring diagrams. CLEAR the DTC and test the system for normal operation.

**No**

GO to Q6.

**Q6: CHECK THE CKP SENSOR GROUND CIRCUIT FOR HIGH RESISTANCE**

1 Measure the resistance between:

| CKP sensor connector PI21, harness side | ECM connector PI300, harness side |
|---|---|
| Pin 01 | Pin 06 |

Is the resistance greater than 5 ohms?

**Yes**

REPAIR the high resistance circuit. For additional information, refer to the wiring diagrams. CLEAR the DTC and test the system for normal operation.

**No**

INSTALL a new CKP sensor.
REFER to: Crankshaft Position (CKP) Sensor (303-14A Electronic Engine Controls - 2.5L NA V6 - AJV6/3.0L NA V6 - AJ27, Removal and Installation).
CLEAR the DTC and test the system for normal operation.

GETtheMANUALS.org

## PINPOINT TEST R : RIGHT-HAND CAMSHAFT POSITION (CMP) SENSOR CIRCUIT

| TEST CONDITIONS | DETAILS/RESULTS/ACTIONS |
|---|---|
| **R1: CHECK THE CMP SENSOR FOR CORRECT INSTALLATION** | |
| | 1 Check the CMP sensor for correct installation. |
| | Is the CMP sensor correctly installed?<br>**Yes**<br>GO to R2.<br>**No**<br>INSTALL the CMP sensor correctly.<br>REFER to: Camshaft Position (CMP) Sensor RH (303-14A Electronic Engine Controls - 2.5L NA V6 - AJV6/3.0L NA V6 - AJ27, Removal and Installation).<br>CLEAR the DTCs and test the system for normal operation. |
| **R2: CHECK THE CMP SENSOR FOR FOREIGN DEBRIS** | |
| | 1 Remove the CMP sensor and inspect for foreign debris. |
| | Is the CMP sensor free of foreign debris?<br>**Yes**<br>GO to R3.<br>**No**<br>CLEAN the sensor and wheel. INSTALL the sensor.<br>REFER to: Camshaft Position (CMP) Sensor RH (303-14A Electronic Engine Controls - 2.5L NA V6 - AJV6/3.0L NA V6 - AJ27, Removal and Installation).<br>CLEAR the DTCs and test the system for normal operation. |
| **R3: CHECK THE CMP SENSOR SENSING CIRCUIT FOR SHORT CIRCUIT TO GROUND** | |
| | 1 Disconnect the CMP sensor electrical connector, PI23. |
| | 2 Measure the resistance between: |

| CMP sensor connector PI23, harness side | Battery |
|---|---|
| Pin 01 | Negative terminal |

| TEST CONDITIONS | DETAILS/RESULTS/ACTIONS |
|---|---|
| | Is the resistance less than 10,000 ohms?<br>**Yes**<br>REPAIR the short circuit. For additional information, refer to the wiring diagrams. CLEAR the DTC and test the system for normal operation.<br>**No**<br>GO to R4. |
| **R4: CHECK THE CMP SENSOR SENSING CIRCUIT FOR SHORT CIRCUIT TO POWER** | |
| | 1 Measure the resistance between: |

| CMP sensor connector PI23, harness side | Battery |
|---|---|
| Pin 01 | Positive terminal |

| TEST CONDITIONS | DETAILS/RESULTS/ACTIONS |
|---|---|
| | Is the resistance less than 10,000 ohms?<br>**Yes**<br>REPAIR the short circuit. For additional information, refer to the wiring diagrams. CLEAR the DTC and test the system for normal operation.<br>**No**<br>GO to R5. |
| **R5: CHECK THE CMP SENSOR SENSING CIRCUIT FOR HIGH RESISTANCE** | |
| | 1 Disconnect the ECM electrical connector, PI300. |
| | 2 Measure the resistance between: |

| CMP sensor connector PI23, harness side | ECM connector PI300, harness side |
|---|---|
| Pin 01 | Pin 34 |

| TEST CONDITIONS | DETAILS/RESULTS/ACTIONS |
|---|---|
| | Is the resistance greater than 5 ohms?<br>**Yes**<br>REPAIR the high resistance circuit. For additional information, refer to the wiring diagrams. CLEAR the DTC and test the system for normal operation.<br>**No**<br>GO to R6. |
| **R6: CHECK THE CMP SENSOR GROUND CIRCUIT FOR HIGH RESISTANCE** | |
| | 1 Measure the resistance between: |

| CMP sensor connector PI23, harness side | ECM connector PI300, harness side |
|---|---|
| Pin 02 | Pin 07 |

| TEST CONDITIONS | DETAILS/RESULTS/ACTIONS |
|---|---|
| | Is the resistance greater than 5 ohms?<br>**Yes**<br>REPAIR the high resistance circuit. For additional information, refer to the wiring diagrams. CLEAR the DTC and test the system for normal operation.<br>**No**<br>INSTALL a new CMP sensor.<br>REFER to: Camshaft Position (CMP) Sensor RH (303-14A Electronic Engine Controls - 2.5L NA V6 - AJV6/3.0L NA V6 - AJ27, Removal and Installation).<br>CLEAR the DTC and test the system for normal operation. |

## PINPOINT TEST S : LEFT-HAND CAMSHAFT POSITION (CMP) SENSOR CIRCUIT

| TEST CONDITIONS | DETAILS/RESULTS/ACTIONS |
|---|---|
| **S1: CHECK THE CMP SENSOR FOR CORRECT INSTALLATION** | |
| | 1 Check the CMP sensor for correct installation. |
| | Is the CMP sensor correctly installed?<br>**Yes**<br>GO to S2.<br>**No**<br>INSTALL the CMP sensor correctly.<br>REFER to: Camshaft Position (CMP) Sensor LH (303-14A Electronic Engine Controls - 2.5L NA V6 - AJV6/3.0L NA V6 - AJ27, Removal and Installation).<br>CLEAR the DTCs and test the system for normal operation. |
| **S2: CHECK THE CMP SENSOR FOR FOREIGN DEBRIS** | |
| | 1 Remove the CMP sensor and inspect for foreign debris. |

GETtheMANUALS.org

Is the CMP sensor free of foreign debris?

**Yes**

GO to S3.

**No**

CLEAN the sensor and wheel. INSTALL the sensor.
REFER to: Camshaft Position (CMP) Sensor LH (303-14A Electronic Engine Controls - 2.5L NA V6 - AJV6/3.0L NA V6 - AJ27, Removal and Installation).
CLEAR the DTCs and test the system for normal operation.

**S3: CHECK THE CMP SENSOR SENSING CIRCUIT FOR SHORT CIRCUIT TO GROUND**

1. Disconnect the CMP sensor electrical connector, PI22.
2. Measure the resistance between:

| CMP sensor connector PI22, harness side | Battery |
|---|---|
| Pin 01 | Negative terminal |

Is the resistance less than 10,000 ohms?

**Yes**

REPAIR the short circuit. For additional information, refer to the wiring diagrams. CLEAR the DTC and test the system for normal operation.

**No**

GO to S4.

**S4: CHECK THE CMP SENSOR SENSING CIRCUIT FOR SHORT CIRCUIT TO POWER**

1. Measure the resistance between:

| CMP sensor connector PI22, harness side | Battery |
|---|---|
| Pin 01 | Positive terminal |

Is the resistance less than 10,000 ohms?

**Yes**

REPAIR the short circuit. For additional information, refer to the wiring diagrams. CLEAR the DTC and test the system for normal operation.

**No**

GO to S5.

**S5: CHECK THE CMP SENSOR SENSING CIRCUIT FOR HIGH RESISTANCE**

1. Disconnect the ECM electrical connector, PI300.
2. Measure the resistance between:

| CMP sensor connector PI22, harness side | ECM connector PI300, harness side |
|---|---|
| Pin 01 | Pin 33 |

Is the resistance greater than 5 ohms?

**Yes**

REPAIR the high resistance circuit. For additional information, refer to the wiring diagrams. CLEAR the DTC and test the system for normal operation.

**No**

GO to S6.

**S6: CHECK THE CMP SENSOR GROUND CIRCUIT FOR HIGH RESISTANCE**

1. Measure the resistance between:

| CMP sensor connector PI22, harness side | ECM connector PI300, harness side |
|---|---|
| Pin 02 | Pin 08 |

Is the resistance greater than 5 ohms?

**Yes**

REPAIR the high resistance circuit. For additional information, refer to the wiring diagrams. CLEAR the DTC and test the system for normal operation.

**No**

INSTALL a new CMP sensor.
REFER to: Camshaft Position (CMP) Sensor LH (303-14A Electronic Engine Controls - 2.5L NA V6 - AJV6/3.0L NA V6 - AJ27, Removal and Installation).
CLEAR the DTC and test the system for normal operation.

## PINPOINT TEST T : RADIATOR COOLING FAN MODULE DRIVE CIRCUIT

| TEST CONDITIONS | DETAILS/RESULTS/ACTIONS |
|---|---|

**T1: CHECK THE RADIATOR FAN MODULE PERMANENT SUPPLY**

1. Disconnect the fan module electrical connector, FH109.
2. Measure the voltage between:

| Fan module connector FH109, harness side | Battery |
|---|---|
| Pin 01 | Negative terminal |

Is the voltage less than 10 volts?

**Yes**

REPAIR the circuit between the cooling fan module and battery. This circuit includes fuse 13 of the front power distribution box and the mega fuses. For additional information, refer to the wiring diagrams. CLEAR the DTC and test the system for normal operation.

**No**

GO to T2.

**T2: CHECK THE RADIATOR FAN MODULE EMS SWITCHED SUPPLY**

1. Disconnect the fan module electrical connector, FH108.
2. Key on, engine off.
3. Make sure the EMS relay is engergized.
4. Measure the voltage between:

| Fan module connector FH108, harness side | Battery |
|---|---|
| Pin 02 | Negative terminal |

Is the voltage less than 10 volts?

**Yes**

REPAIR the circuit between the cooling fan module and battery. This circuit includes fuse 38 of the front power distribution box and the EMS control relay. For additional information, refer to the wiring diagrams. CLEAR the DTC and test the system for normal operation.

**No**

GO to T3.

**T3: CHECK THE RADIATOR FAN MODULE CONTROL CIRCUIT FOR SHORT CIRCUIT TO GROUND**

1. Key off.

GETtheMANUALS.org

| | |
|---|---|
| | 2 Measure the resistance between: |

| Fan module connector FH108, harness side | Battery |
|---|---|
| Pin 01 | Negative terminal |

| | |
|---|---|
| | Is the resistance less than 10,000 ohms?<br>**Yes**<br>REPAIR the short circuit. For additional information, refer to the wiring diagrams. CLEAR the DTC and test the system for normal operation.<br>**No**<br>GO to T4. |

**T4: CHECK THE RADIATOR FAN MODULE CONTROL CIRCUIT FOR SHORT CIRCUIT TO POWER**

| | |
|---|---|
| | 1 Measure the resistance between: |

| Fan module connector FH108, harness side | Battery |
|---|---|
| Pin 01 | Positive terminal |

| | |
|---|---|
| | Is the resistance less than 10,000 ohms?<br>**Yes**<br>REPAIR the short circuit. For additional information, refer to the wiring diagrams. CLEAR the DTC and test the system for normal operation.<br>**No**<br>GO to T5. |

**T5: CHECK THE RADIATOR FAN MODULE CONTROL CIRCUIT FOR HIGH RESISTANCE**

| | |
|---|---|
| | 1 Disconnect the ECM electrical connector, FH300. |
| | 2 Measure the resistance between: |

| Fan module connector FH108, harness side | ECM connector FH300, harness side |
|---|---|
| Pin 01 | Pin 49 |

| | |
|---|---|
| | Is the resistance greater than 5 ohms?<br>**Yes**<br>REPAIR the high resistance circuit. For additional information, refer to the wiring diagrams. CLEAR the DTC and test the system for normal operation.<br>**No**<br>GO to T6. |

**T6: CHECK THE RADIATOR FAN MODULE GROUND FOR HIGH RESISTANCE**

| | |
|---|---|
| | 1 Measure the resistance between: |

| Fan module connector FH109, harness side | Battery |
|---|---|
| Pin 02 | Negative terminal |

| | |
|---|---|
| | Is the resistance greater than 5 ohms?<br>**Yes**<br>REPAIR the high resistance circuit. For additional information, refer to the wiring diagrams. CLEAR the DTC and test the system for normal operation.<br>**No**<br>INSTALL a new radiator cooling fan module. CLEAR the DTC and test the system for normal operation. |

## PINPOINT TEST U : BATTERY POWER SUPPLY VOLTAGE

| TEST CONDITIONS | DETAILS/RESULTS/ACTIONS |
|---|---|

**U1: CHECK THE BATTERY POWER SUPPLY TO THE ECM**

| | |
|---|---|
| | 1 Disconnect the ECM electrical connector, FH300. |
| | 2 Measure the voltage between: |

| ECM connector FH300, harness side | Battery |
|---|---|
| Pin 54 | Negative terminal |

| | |
|---|---|
| | Is the voltage greater than 10 volts?<br>**Yes**<br>Recheck the DTCs.<br>**No**<br>REPAIR the battery power supply circuit. This circuit includes fuse 33 of the front power distribution box. For additional information, refer to the wiring diagrams. CLEAR the DTC and test the system for normal operation. |

## PINPOINT TEST V : ACCELERATOR PEDAL POSITION (APP) SENSOR CIRCUIT 1

| TEST CONDITIONS | DETAILS/RESULTS/ACTIONS |
|---|---|

**V1: CHECK THE APP SENSOR SUPPLY VOLTAGE AT THE SENSOR**

| | |
|---|---|
| | 1 Disconnect the APP sensor electrical connector, CA88. |
| | 2 Key on, engine off. |
| | 3 Measure the voltage between: |

| APP sensor connector CA88, harness side | Battery |
|---|---|
| Pin 05 | Negative terminal |

| | |
|---|---|
| | Is the voltage less than 4 volts?<br>**Yes**<br>REPAIR the 5 volt supply circuit between the APP sensor and the ECM. For additional information, refer to the wiring diagrams. CLEAR the DTC and test the system for normal operation.<br>**No**<br>GO to V2. |

**V2: CHECK THE APP SENSOR SUPPLY CIRCUIT FOR SHORT CIRCUIT TO POWER**

| | |
|---|---|
| | 1 Key off. |
| | 2 Measure the resistance between: |

| APP sensor connector CA88, harness side | Battery |
|---|---|
| Pin 05 | Positive terminal |

| | |
|---|---|
| | Is the resistance less than 10,000 ohms?<br>**Yes**<br>REPAIR the short circuit. For additional information, refer to the wiring diagrams. CLEAR the DTC and test the system for normal operation.<br>**No**<br>GO to V3. |

**V3: CHECK THE APP SENSOR SENSING CIRCUIT 1 FOR SHORT CIRCUIT TO GROUND**

GETtheMANUALS.org

| | |
|---|---|
| | 1 Measure the resistance between: |

| APP sensor connector CA88, harness side | Battery |
|---|---|
| Pin 04 | Negative terminal |

| | |
|---|---|
| | Is the resistance less than 10,000 ohms?<br>**Yes**<br>REPAIR the short circuit. For additional information, refer to the wiring diagrams. CLEAR the DTC and test the system for normal operation.<br>**No**<br>GO to V4. |

**V4: CHECK THE APP SENSOR SENSING CIRCUIT 1 FOR SHORT CIRCUIT TO POWER**

| | |
|---|---|
| | 1 Measure the resistance between: |

| APP sensor connector CA88, harness side | Battery |
|---|---|
| Pin 04 | Positive terminal |

| | |
|---|---|
| | Is the resistance less than 10,000 ohms?<br>**Yes**<br>REPAIR the short circuit. For additional information, refer to the wiring diagrams. CLEAR the DTC and test the system for normal operation.<br>**No**<br>GO to V5. |

**V5: CHECK THE APP SENSOR SENSING CIRCUIT 1 FOR HIGH RESISTANCE**

| | |
|---|---|
| | 1 Disconnect the ECM electrical connector, FH300. |
| | 2 Measure the resistance between: |

| APP sensor connector CA88, harness side | ECM connector FH300, harness side |
|---|---|
| Pin 04 | Pin 24 |

| | |
|---|---|
| | Is the resistance greater than 5 ohms?<br>**Yes**<br>REPAIR the high resistance circuit. For additional information, refer to the wiring diagrams. CLEAR the DTC and test the system for normal operation.<br>**No**<br>GO to V6. |

**V6: CHECK THE APP SENSOR GROUND CIRCUIT FOR HIGH RESISTANCE**

| | |
|---|---|
| | 1 Measure the resistance between: |

| APP sensor connector CA88, harness side | ECM connector FH300, harness side |
|---|---|
| Pin 06 | Pin 08 |

| | |
|---|---|
| | Is the resistance greater than 5 ohms?<br>**Yes**<br>REPAIR the high resistance circuit. For additional information, refer to the wiring diagrams. CLEAR the DTC and test the system for normal operation.<br>**No**<br>INSTALL a new APP sensor.<br>REFER to: Accelerator Pedal (310-02 Acceleration Control, Removal and Installation).<br>CLEAR the DTC and test the system for normal operation. |

## PINPOINT TEST W : ACCELERATOR PEDAL POSITION (APP) SENSOR CIRCUIT 2

| TEST CONDITIONS | DETAILS/RESULTS/ACTIONS |
|---|---|

**W1: CHECK THE APP SENSOR SUPPLY VOLTAGE AT THE SENSOR**

| | |
|---|---|
| | 1 Disconnect the APP sensor electrical connector, CA88. |
| | 2 Key on, engine off. |
| | 3 Measure the voltage between: |

| APP sensor connector CA88, harness side | Battery |
|---|---|
| Pin 02 | Negative terminal |

| | |
|---|---|
| | Is the voltage less than 4 volts?<br>**Yes**<br>REPAIR the 5 volt supply circuit between the APP sensor and the ECM. For additional information, refer to the wiring diagrams. CLEAR the DTC and test the system for normal operation.<br>**No**<br>GO to W2. |

**W2: CHECK THE APP SENSOR SUPPLY CIRCUIT FOR SHORT CIRCUIT TO POWER**

| | |
|---|---|
| | 1 Key off. |
| | 2 Measure the resistance between: |

| APP sensor connector CA88, harness side | Battery |
|---|---|
| Pin 02 | Positive terminal |

| | |
|---|---|
| | Is the resistance less than 10,000 ohms?<br>**Yes**<br>REPAIR the short circuit. For additional information, refer to the wiring diagrams. CLEAR the DTC and test the system for normal operation.<br>**No**<br>GO to W3. |

**W3: CHECK THE APP SENSOR SENSING CIRCUIT 2 FOR SHORT CIRCUIT TO GROUND**

| | |
|---|---|
| | 1 Measure the resistance between: |

| APP sensor connector CA88, harness side | Battery |
|---|---|
| Pin 01 | Negative terminal |

| | |
|---|---|
| | Is the resistance less than 10,000 ohms?<br>**Yes**<br>REPAIR the short circuit. For additional information, refer to the wiring diagrams. CLEAR the DTC and test the system for normal operation.<br>**No**<br>GO to W4. |

**W4: CHECK THE APP SENSOR SENSING CIRCUIT 2 FOR SHORT CIRCUIT TO POWER**

| | |
|---|---|
| | 1 Measure the resistance between: |

| APP sensor connector CA88, harness side | Battery |
|---|---|
| Pin 01 | Positive terminal |

GETtheMANUALS.org

Is the resistance less than 10,000 ohms?

**Yes**

REPAIR the short circuit. For additional information, refer to the wiring diagrams. CLEAR the DTC and test the system for normal operation.

**No**

GO to W5.

**W5: CHECK THE APP SENSOR SENSING CIRCUIT 2 FOR HIGH RESISTANCE**

1. Disconnect the ECM electrical connector, FH300.
2. Measure the resistance between:

| APP sensor connector CA88, harness side | ECM connector FH300, harness side |
|---|---|
| Pin 01 | Pin 38 |

Is the resistance greater than 5 ohms?

**Yes**

REPAIR the high resistance circuit. For additional information, refer to the wiring diagrams. CLEAR the DTC and test the system for normal operation.

**No**

GO to W6.

**W6: CHECK THE APP SENSOR GROUND CIRCUIT FOR HIGH RESISTANCE**

1. Measure the resistance between:

| APP sensor connector CA88, harness side | ECM connector FH300, harness side |
|---|---|
| Pin 03 | Pin 07 |

Is the resistance greater than 5 ohms?

**Yes**

REPAIR the high resistance circuit. For additional information, refer to the wiring diagrams. CLEAR the DTC and test the system for normal operation.

**No**

INSTALL a new APP sensor.
REFER to: Accelerator Pedal (310-02 Acceleration Control, Removal and Installation).
CLEAR the DTC and test the system for normal operation.

## PINPOINT TEST X : THROTTLE MOTOR CONTROL CIRCUIT

| TEST CONDITIONS | DETAILS/RESULTS/ACTIONS |
|---|---|

**X1: CHECK THE THROTTLE MOTOR TO ECM NEGATIVE CIRCUIT FOR HIGH RESISTANCE**

1. Disconnect the throttle motor electrical connector, PI26.
2. Disconnect the ECM electrical connector, PI300.
3. Measure the resistance between:

| Throttle motor connector PI26, harness side | ECM connector PI300, harness side |
|---|---|
| Pin 01 | Pin 74 |

Is the resistance greater than 5 ohms?

**Yes**

REPAIR the high resistance circuit. For additional information, refer to the wiring diagrams. CLEAR the DTC and test the system for normal operation.

**No**

GO to X2.

**X2: CHECK THE THROTTLE MOTOR TO ECM POSITIVE CIRCUIT FOR HIGH RESISTANCE**

1. Measure the resistance between:

| Throttle motor connector PI26, harness side | ECM connector PI300, harness side |
|---|---|
| Pin 02 | Pin 75 |

Is the resistance greater than 5 ohms?

**Yes**

REPAIR the high resistance circuit. For additional information, refer to the wiring diagrams. CLEAR the DTC and test the system for normal operation.

**No**

INSTALL a new throttle body.
REFER to: Throttle Body - VIN Range: N52048->N99999 (303-04A Fuel Charging and Controls - 2.5L NA V6 - AJV6/3.0L NA V6 - AJ27, Removal and Installation).
CLEAR the DTC and test the system for normal operation.

## PINPOINT TEST Y : FUEL RAIL PRESSURE (FRP) SENSOR CIRCUIT

| TEST CONDITIONS | DETAILS/RESULTS/ACTIONS |
|---|---|

**Y1: CHECK THE FRP SENSOR SUPPLY CIRCUIT VOLTAGE**

1. Disconnect the FRP sensor electrical connector, IL12.
2. Key on, engine off.
3. Measure the voltage between:

| FRP sensor connector IL12, harness side | Battery |
|---|---|
| Pin 01 | Negative terminal |

Is the voltage less than 4 volts?

**Yes**

REPAIR the 5 volt supply circuit between the FRP sensor and the ECM. For additional information, refer to the wiring diagrams. CLEAR the DTC and test the system for normal operation.

**No**

GO to Y2.

**Y2: CHECK THE FRP SENSOR SUPPLY CIRCUIT FOR SHORT CIRCUIT TO POWER**

1. Key off.
2. Measure the resistance between:

| FRP sensor connector IL12, harness side | Battery |
|---|---|
| Pin 01 | Positive terminal |

Is the resistance less than 10,000 ohms?

**Yes**

REPAIR the short circuit. For additional information, refer to the wiring diagrams. CLEAR the DTC and test the system for normal operation.

**No**

GO to Y3.

GETtheMANUALS.org

**Y3: CHECK THE FRP SENSOR SIGNAL CIRCUIT FOR SHORT CIRCUIT TO GROUND**

| | |
|---|---|
| | 1 Measure the resistance between: |

| FRP sensor connector IL12, harness side | Battery |
|---|---|
| Pin 03 | Negative terminal |

| | |
|---|---|
| | Is the resistance less than 10,000 ohms?<br>**Yes**<br>REPAIR the short circuit. For additional information, refer to the wiring diagrams. CLEAR the DTC and test the system for normal operation.<br>**No**<br>GO to Y4. |

**Y4: CHECK THE FRP SENSOR SIGNAL CIRCUIT FOR SHORT CIRCUIT TO POWER**

| | |
|---|---|
| | 1 Measure the resistance between: |

| FRP sensor connector IL12, harness side | Battery |
|---|---|
| Pin 03 | Positive terminal |

| | |
|---|---|
| | Is the resistance less than 10,000 ohms?<br>**Yes**<br>REPAIR the short circuit. For additional information, refer to the wiring diagrams. CLEAR the DTC and test the system for normal operation.<br>**No**<br>GO to Y5. |

**Y5: CHECK THE FRP SENSOR SIGNAL CIRCUIT FOR HIGH RESISTANCE**

| | |
|---|---|
| | 1 Disconnect the ECM sensor electrical connector, PI300. |
| | 2 Measure the resistance between: |

| FRP sensor connector IL12, harness side | ECM connector PI300, harness side |
|---|---|
| Pin 03 | Pin 71 |

| | |
|---|---|
| | Is the resistance greater than 5 ohms?<br>**Yes**<br>REPAIR the high resistance circuit. For additional information, refer to the wiring diagrams. CLEAR the DTC and test the system for normal operation.<br>**No**<br>GO to Y6. |

**Y6: CHECK THE FRP SENSOR GROUND CIRCUIT FOR HIGH RESISTANCE**

| | |
|---|---|
| | 1 Measure the resistance between: |

| FRP sensor connector IL12, harness side | ECM connector PI300, harness side |
|---|---|
| Pin 02 | Pin 10 |

| | |
|---|---|
| | Is the resistance greater than 5 ohms?<br>**Yes**<br>REPAIR the high resistance circuit. For additional information, refer to the wiring diagrams. CLEAR the DTC and test the system for normal operation.<br>**No**<br>INSTALL a new FRP sensor. CLEAR the DTC and test the system for normal operation. |

## PINPOINT TEST Z : STARTER RELAY SIGNAL

| TEST CONDITIONS | DETAILS/RESULTS/ACTIONS |
|---|---|

**Z1: CHECK THE STARTER RELAY TO ECM CIRCUIT FOR SHORT CIRCUIT TO GROUND**

| | |
|---|---|
| | 1 Key off. |
| | 2 Remove the starter relay. |
| | 3 Measure the resistance between: |

| Starter relay base | Battery |
|---|---|
| Pin 02 | Negative terminal |

| | |
|---|---|
| | Is the resistance less than 10,000 ohms?<br>**Yes**<br>REPAIR the short circuit. For additional information, refer to the wiring diagrams. CLEAR the DTC and test the system for normal operation.<br>**No**<br>GO to Z2. |

**Z2: CHECK THE STARTER RELAY TO ECM CIRCUIT FOR SHORT CIRCUIT TO POWER**

| | |
|---|---|
| | 1 Measure the resistance between: |

| Starter relay base | Battery |
|---|---|
| Pin 02 | Positive terminal |

| | |
|---|---|
| | Is the resistance less than 10,000 ohms?<br>**Yes**<br>REPAIR the short circuit. For additional information, refer to the wiring diagrams. CLEAR the DTC and test the system for normal operation.<br>**No**<br>GO to Z3. |

**Z3: CHECK THE STARTER RELAY TO ECM CIRCUIT FOR HIGH RESISTANCE**

| | |
|---|---|
| | 1 Disconnect the ECM electrical connector, EC300. |
| | 2 Measure the resistance between: |

| Starter relay base | ECM connector EC300, harness side |
|---|---|
| Pin 02 | Pin 51 |

| | |
|---|---|
| | Is the resistance greater than 5 ohms?<br>**Yes**<br>REPAIR the high resistance circuit. For additional information, refer to the wiring diagrams. CLEAR the DTC and test the system for normal operation.<br>**No**<br>INSTALL a new starter relay. Clear the DTC and test the system for normal operation. If the DTC resets, refer to the warranty policy and procedures manual if an ECM is suspect. |

## PINPOINT TEST AA : RIGHT-HAND VARIABLE CAMSHAFT TIMING (VCT) OIL CONTROL SOLENOID CIRCUIT

| TEST CONDITIONS | DETAILS/RESULTS/ACTIONS |
|---|---|

**AA1: CHECK ECM TO VCT SOLENOID SUPPLY CIRCUIT VOLTAGE**

| | |
|---|---|
| | 1 Disconnect the VCT solenoid electrical connector, PI16. |
| | 2 Key on, engine off. |

SETHOMANUALS.org

| | |
|---|---|
| | 3 Measure the voltage between: |

| VCT solenoid connector PI16, harness side | Battery |
|---|---|
| Pin 02 | Negative terminal |

| | |
|---|---|
| | Is the voltage greater than 10 volts?<br>**Yes**<br>GO to AA2.<br>**No**<br>REPAIR the circuit between the VCT solenoid electrical connector and battery. This circuit includes fuse 38 of the front power distribution box and the EMS control relay. For additional information, refer to the wiring diagrams. CLEAR the DTC and test the system for normal operation. |

**AA2: CHECK VCT SOLENOID CONTROL CIRCUIT FOR HIGH RESISTANCE**

| | |
|---|---|
| | 1 Key off. |
| | 2 Disconnect the ECM electrical connector, PI300. |
| | 3 Measure the resistance between: |

| VCT solenoid connector PI16, harness side | ECM connector PI300, harness side |
|---|---|
| Pin 01 | Pin 86 |

| | |
|---|---|
| | Is the resistance greater than 5 ohms?<br>**Yes**<br>REPAIR the high resistance circuit. For additional information, refer to the wiring diagrams. CLEAR the DTC and test the system for normal operation.<br>**No**<br>INSTALL a new VCT oil control solenoid.<br>REFER to: Variable Camshaft Timing (VCT) Oil Control Solenoid (303-14A Electronic Engine Controls - 2.5L NA V6 - AJV6/3.0L NA V6 - AJ27, Removal and Installation).<br>CLEAR the DTC and test the system for normal operation. |

## PINPOINT TEST AB : LEFT-HAND VARIABLE CAMSHAFT TIMING (VCT) OIL CONTROL SOLENOID CIRCUIT

| TEST CONDITIONS | DETAILS/RESULTS/ACTIONS |
|---|---|

**AB1: CHECK ECM TO VCT SOLENOID SUPPLY CIRCUIT VOLTAGE**

| | |
|---|---|
| | 1 Disconnect the VCT solenoid electrical connector, PI17. |
| | 2 Key on, engine off. |
| | 3 Measure the voltage between: |

| VCT solenoid connector PI17, harness side | Battery |
|---|---|
| Pin 02 | Negative terminal |

| | |
|---|---|
| | Is the voltage greater than 10 volts?<br>**Yes**<br>GO to AB2.<br>**No**<br>REPAIR the circuit between the VCT solenoid electrical connector and battery. This circuit includes fuse 38 of the front power distribution box and the EMS control relay. For additional information, refer to the wiring diagrams. CLEAR the DTC and test the system for normal operation. |

**AB2: CHECK VCT SOLENOID CONTROL CIRCUIT FOR HIGH RESISTANCE**

| | |
|---|---|
| | 1 Key off. |
| | 2 Disconnect the ECM electrical connector, PI300. |
| | 3 Measure the resistance between: |

| VCT solenoid connector PI17, harness side | ECM connector PI300, harness side |
|---|---|
| Pin 01 | Pin 87 |

| | |
|---|---|
| | Is the resistance greater than 5 ohms?<br>**Yes**<br>REPAIR the high resistance circuit. For additional information, refer to the wiring diagrams. CLEAR the DTC and test the system for normal operation.<br>**No**<br>INSTALL a new VCT oil control solenoid.<br>REFER to: Variable Camshaft Timing (VCT) Oil Control Solenoid (303-14A Electronic Engine Controls - 2.5L NA V6 - AJV6/3.0L NA V6 - AJ27, Removal and Installation).<br>CLEAR the DTC and test the system for normal operation. |

## PINPOINT TEST AC : EMS CONTROL RELAY CIRCUITS

| TEST CONDITIONS | DETAILS/RESULTS/ACTIONS |
|---|---|

**AC1: CHECK THE EMS RELAY PERMANENT SUPPLY VOLTAGES**

| | |
|---|---|
| | 1 Remove the EMS relay. |
| | 2 Measure the voltage between: |

| EMS relay base, harness side | Battery |
|---|---|
| Pin 01 | Negative terminal |
| Pin 03 | Negative terminal |

| | |
|---|---|
| | Are both voltages greater than 10 volts?<br>**Yes**<br>GO to AC2.<br>**No**<br>REPAIR the circuit between the relay base and battery. For additional information, refer to the wiring diagrams. CLEAR the DTC and test the system for normal operation. |

**AC2: CHECK THE ECM TO EMS RELAY CONTROL CIRCUIT FOR SHORT CIRCUIT TO GROUND**

| | |
|---|---|
| | 1 Measure the resistance between: |

| EMS relay base, harness side | Battery |
|---|---|
| Pin 02 | Negative terminal |

| | |
|---|---|
| | Is the resistance less than 10,000 ohms?<br>**Yes**<br>REPAIR the short circuit. For additional information, refer to the wiring diagrams. CLEAR the DTC and test the system for normal operation.<br>**No**<br>GO to AC3. |

**AC3: CHECK THE ECM TO EMS RELAY CONTROL CIRCUIT FOR SHORT CIRCUIT TO POWER**

GETtheMANUALS.org

1 Measure the resistance between:

| EMS relay base, harness side | Battery |
|---|---|
| Pin 02 | Positive terminal |

Is the resistance less than 10,000 ohms?

**Yes**

REPAIR the short circuit. For additional information, refer to the wiring diagrams. CLEAR the DTC and test the system for normal operation.

**No**

GO to AC4.

**AC4: CHECK THE ECM TO EMS RELAY CONTROL CIRCUIT FOR HIGH RESISTANCE**

1 Disconnect the ECM electrical connector, FH300.

2 Measure the resistance between:

| EMS relay base, harness side | ECM connector FH300, harness side |
|---|---|
| Pin 02 | Pin 16 |

Is the resistance greater than 5 ohms?

**Yes**

REPAIR the high resistance circuit. For additional information, refer to the wiring diagrams. CLEAR the DTC and test the system for normal operation.

**No**

GO to AC5.

**AC5: CHECK THE EMS RELAY TO ECM IGNITION CIRCUITS FOR HIGH RESISTANCE**

1 Measure the resistance between:

| EMS relay base, harness side | ECM connector FH300, harness side |
|---|---|
| Pin 05 | Pin 04 |
| Pin 05 | Pin 06 |

Is either resistance greater than 5 ohms?

**Yes**

REPAIR the high resistance circuit. These circuits include fuses 18 and 38 of the front power distribution box. For additional information, refer to the wiring diagrams. CLEAR the DTC and test the system for normal operation.

**No**

INSTALL a new EMS control relay. CLEAR the DTC and test the system for normal operation.

## PINPOINT TEST AD : MANIFOLD ABSOLUTE PRESSURE (MAP) SENSOR CIRCUIT

| TEST CONDITIONS | DETAILS/RESULTS/ACTIONS |
|---|---|

**AD1: CHECK THE MAP SENSOR SUPPLY CIRCUIT VOLTAGE**

1 Disconnect the MAP sensor electrical connector, PI29.

2 Key on, engine off.

3 Measure the voltage between:

| MAP sensor connector PI29, harness side | Battery |
|---|---|
| Pin 02 | Negative terminal |

Is the voltage less than 4 volts?

**Yes**

REPAIR the 5 volt supply circuit between the MAP sensor and the ECM. For additional information, refer to the wiring diagrams. CLEAR the DTC and test the system for normal operation.

**No**

GO to AD2.

**AD2: CHECK THE MAP SENSOR SUPPLY CIRCUIT FOR SHORT CIRCUIT TO POWER**

1 Key off.

2 Measure the resistance between:

| MAP sensor connector PI29, harness side | Battery |
|---|---|
| Pin 02 | Positive terminal |

Is the resistance less than 10,000 ohms?

**Yes**

REPAIR the short circuit. For additional information, refer to the wiring diagrams. CLEAR the DTC and test the system for normal operation.

**No**

GO to AD3.

**AD3: CHECK THE MAP SENSOR SENSING CIRCUIT FOR SHORT CIRCUIT TO GROUND**

1 Measure the resistance between:

| MAP sensor connector PI29, harness side | Battery |
|---|---|
| Pin 01 | Negative terminal |

Is the resistance less than 10,000 ohms?

**Yes**

REPAIR the short circuit. For additional information, refer to the wiring diagrams. CLEAR the DTC and test the system for normal operation.

**No**

GO to AD4.

**AD4: CHECK THE MAP SENSOR SENSING CIRCUIT FOR SHORT CIRCUIT TO POWER**

1 Measure the resistance between:

| MAP sensor connector PI29, harness side | Battery |
|---|---|
| Pin 01 | Positive terminal |

Is the resistance less than 10,000 ohms?

**Yes**

REPAIR the short circuit. For additional information, refer to the wiring diagrams. CLEAR the DTC and test the system for normal operation.

**No**

GO to AD5.

**AD5: CHECK THE MAP SENSOR SENSING CIRCUIT FOR HIGH RESISTANCE**

1 Disconnect the ECM electrical connector, PI300.

2 Measure the resistance between:

| MAP sensor connector PI29, harness side | ECM connector PI300, harness side |
|---|---|
| Pin 01 | Pin 69 |

GETtheMANUALS.org

| | |
|---|---|
| | Is the resistance greater than 5 ohms?<br>**Yes**<br>REPAIR the high resistance circuit. For additional information, refer to the wiring diagrams. CLEAR the DTC and test the system for normal operation.<br>**No**<br>GO to AD6. |

**AD6: CHECK THE MAP SENSOR GROUND CIRCUIT FOR HIGH RESISTANCE**

1 Measure the resistance between:

| MAP sensor connector PI29, harness side | ECM connector PI300, harness side |
|---|---|
| Pin 04 | Pin 10 |

Is the resistance greater than 5 ohms?

**Yes**

REPAIR the high resistance circuit. For additional information, refer to the wiring diagrams. CLEAR the DTC and test the system for normal operation.

**No**

INSTALL a new MAP sensor.
REFER to: Manifold Absolute Pressure (MAP) Sensor (303-14A Electronic Engine Controls - 2.5L NA V6 - AJV6/3.0L NA V6 - AJ27, Removal and Installation).
CLEAR the DTC and test the system for normal operation.

## PINPOINT TEST AE : ENGINE FUEL TEMPERATURE (EFT) SENSOR CIRCUIT

| TEST CONDITIONS | DETAILS/RESULTS/ACTIONS |
|---|---|

**AE1: CHECK THE EFT SENSOR SENSING CIRCUIT FOR SHORT CIRCUIT TO GROUND**

1 Disconnect the EFT sensor electrical connector, IL09.

2 Measure the resistance between:

| EFT sensor connector IL09, harness side | Battery |
|---|---|
| Pin 02 | Negative terminal |

Is the resistance less than 10,000 ohms?

**Yes**

REPAIR the short circuit. For additional information, refer to the wiring diagrams. CLEAR the DTC and test the system for normal operation.

**No**

GO to AE2.

**AE2: CHECK THE EFT SENSOR SENSING CIRCUIT FOR SHORT CIRCUIT TO POWER**

1 Measure the resistance between:

| EFT sensor connector IL09, harness side | Battery |
|---|---|
| Pin 02 | Positive terminal |

Is the resistance less than 10,000 ohms?

**Yes**

REPAIR the short circuit. For additional information, refer to the wiring diagrams. CLEAR the DTC and test the system for normal operation.

**No**

GO to AE3.

**AE3: CHECK THE EFT SENSOR SENSING CIRCUIT FOR HIGH RESISTANCE**

1 Disconnect the ECM electrical connector, PI300.

2 Measure the resistance between:

| EFT sensor connector IL09, harness side | ECM connector PI300, harness side |
|---|---|
| Pin 02 | Pin 46 |

Is the resistance greater than 5 ohms?

**Yes**

REPAIR the high resistance circuit. For additional information, refer to the wiring diagrams. CLEAR the DTC and test the system for normal operation.

**No**

GO to AE4.

**AE4: CHECK THE EFT SENSOR GROUND CIRCUIT FOR HIGH RESISTANCE**

1 Measure the resistance between:

| EFT sensor connector IL09, harness side | ECM connector PI300, harness side |
|---|---|
| Pin 01 | Pin 15 |

Is the resistance greater than 5 ohms?

**Yes**

REPAIR the high resistance circuit. For additional information, refer to the wiring diagrams. CLEAR the DTC and test the system for normal operation.

**No**

INSTALL a new EFT sensor.
REFER to: Fuel Temperature Sensor (303-14A Electronic Engine Controls - 2.5L NA V6 - AJV6/3.0L NA V6 - AJ27, Removal and Installation).
CLEAR the DTC and test the system for normal operation.

## PINPOINT TEST AF : AIR CONDITIONING (A/C) PRESSURE SENSOR CIRCUIT

| TEST CONDITIONS | DETAILS/RESULTS/ACTIONS |
|---|---|

**AF1: CHECK THE A/C PRESSURE SENSOR POWER SUPPLY CIRCUIT VOLTAGE**

1 Disconnect the A/C pressure sensor electrical connector, FH110.

2 Key on, engine off.

3 Measure the voltage between:

| A/C pressure sensor connector FH110, harness side | Battery |
|---|---|
| Pin 02 | Negative terminal |

Is the voltage less than 4 volts?

**Yes**

REPAIR the 5 volt supply circuit between the A/C pressure sensor and the ECM. For additional information, refer to the wiring diagrams. CLEAR the DTC and test the system for normal operation.

**No**

GO to AF2.

GETtheMANUALS.org

**AF2: CHECK THE A/C PRESSURE SENSOR POWER SUPPLY CIRCUIT FOR SHORT CIRCUIT TO POWER**

1 Key off.

2 Measure the resistance between:

| A/C pressure sensor connector FH110, harness side | Battery |
|---|---|
| Pin 02 | Positive terminal |

Is the resistance less than 10,000 ohms?

**Yes**

REPAIR the short circuit. For additional information, refer to the wiring diagrams. CLEAR the DTC and test the system for normal operation.

**No**

GO to AF3.

**AF3: CHECK THE A/C PRESSURE SENSOR SENSING CIRCUIT FOR SHORT CIRCUIT TO GROUND**

1 Measure the resistance between:

| A/C pressure sensor connector FH110, harness side | Battery |
|---|---|
| Pin 03 | Negative terminal |

Is the resistance less than 10,000 ohms?

**Yes**

REPAIR the short circuit. For additional information, refer to the wiring diagrams. CLEAR the DTC and test the system for normal operation.

**No**

GO to AF4.

**AF4: CHECK THE A/C PRESSURE SENSOR SENSING CIRCUIT FOR SHORT CIRCUIT TO POWER**

1 Measure the resistance between:

| A/C pressure sensor connector FH110, harness side | Battery |
|---|---|
| Pin 03 | Positive terminal |

Is the resistance less than 10,000 ohms?

**Yes**

REPAIR the short circuit. For additional information, refer to the wiring diagrams. CLEAR the DTC and test the system for normal operation.

**No**

GO to AF5.

**AF5: CHECK THE A/C PRESSURE SENSOR SENSING CIRCUIT FOR HIGH RESISTANCE**

1 Disconnect the ECM electrical connector, FH300.

2 Measure the resistance between:

| A/C pressure sensor connector FH110, harness side | ECM connector FH300, harness side |
|---|---|
| Pin 03 | Pin 12 |

Is the resistance greater than 5 ohms?

**Yes**

REPAIR the high resistance circuit. For additional information, refer to the wiring diagrams. CLEAR the DTC and test the system for normal operation.

**No**

GO to AF6.

**AF6: CHECK THE A/C PRESSURE SENSOR GROUND CIRCUIT FOR HIGH RESISTANCE**

1 Measure the resistance between:

| A/C pressure sensor connector FH110, harness side | ECM connector FH300, harness side |
|---|---|
| Pin 01 | Pin 08 |

Is the resistance greater than 5 ohms?

**Yes**

REPAIR the high resistance circuit. For additional information, refer to the wiring diagrams. CLEAR the DTC and test the system for normal operation.

**No**

INSTALL a new A/C pressure sensor.
REFER to: Pressure Cutoff Switch - V8 4.2L Petrol/V8 S/C 4.2L Petrol/2.5L NA V6 - AJV6/3.0L NA V6 - AJ27 (412-03 Air Conditioning, Removal and Installation).
CLEAR the DTC and test the system for normal operation.

## PINPOINT TEST AG : INTAKE MANIFOLD TUNING (IMT) VALVE 1 (TOP) CIRCUIT

| TEST CONDITIONS | DETAILS/RESULTS/ACTIONS |
|---|---|

**AG1: CHECK THE IMT VALVE POWER SUPPLY CIRCUIT VOLTAGE**

1 Disconnect the IMT valve electrical connector, PI30.

2 Key on, engine off.

3 Measure the voltage between:

| IMT valve connector PI30, harness side | Battery |
|---|---|
| Pin 01 | Negative terminal |

Is the voltage greater than 10 volts?

**Yes**

GO to AG2.

**No**

REPAIR the circuit between the IMT valve electrical connector and battery. This circuit includes fuse 37 of the front power distribution box and the EMS control relay. For additional information, refer to the wiring diagrams. CLEAR the DTC and test the system for normal operation.

**AG2: CHECK THE IMT VALVE DRIVE CIRCUIT FOR SHORT CIRCUIT TO GROUND**

1 Key off.

2 Measure the resistance between:

| IMT valve connector PI30, harness side | Battery |
|---|---|
| Pin 02 | Negative terminal |

Is the resistance less than 10,000 ohms?

**Yes**

REPAIR the short circuit. For additional information, refer to the wiring diagrams. CLEAR the DTC and test the system for normal operation.

**No**

GO to AG3.

**AG3: CHECK THE IMT VALVE DRIVE CIRCUIT FOR SHORT CIRCUIT TO POWER**

1 Measure the resistance between:

| IMT valve connector PI30, harness side | Battery |
|---|---|
| Pin 02 | Positive terminal |

GETtheMANUALS.org

| | |
|---|---|
| | Is the resistance less than 10,000 ohms?<br>**Yes**<br>REPAIR the short circuit. For additional information, refer to the wiring diagrams. CLEAR the DTC and test the system for normal operation.<br>**No**<br>GO to AG4. |

**AG4: CHECK THE IMT VALVE DRIVE CIRCUIT FOR HIGH RESISTANCE**

1. Disconnect the ECM electrical connector, PI300.
2. Measure the resistance between:

| IMT valve connector PI30, harness side | ECM connector PI300, harness side |
|---|---|
| Pin 02 | Pin 84 |

| | |
|---|---|
| | Is the resistance greater than 5 ohms?<br>**Yes**<br>REPAIR the high resistance circuit. For additional information, refer to the wiring diagrams. CLEAR the DTC and test the system for normal operation.<br>**No**<br>INSTALL a new IMT valve,<br>REFER to: Intake Manifold Tuning (IMT) Valve LH (303-14A Electronic Engine Controls - 2.5L NA V6 - AJV6/3.0L NA V6 - AJ27, Removal and Installation).<br>CLEAR the DTC and test the system for normal operation. |

## PINPOINT TEST AH : INTAKE MANIFOLD TUNING (IMT) VALVE 2 (BOTTOM) CIRCUIT

| TEST CONDITIONS | DETAILS/RESULTS/ACTIONS |
|---|---|

**AH1: CHECK THE IMT VALVE POWER SUPPLY CIRCUIT VOLTAGE**

1. Disconnect the IMT valve electrical connector, PI31.
2. Key on, engine off.
3. Measure the voltage between:

| IMT valve connector PI31, harness side | Battery |
|---|---|
| Pin 01 | Negative terminal |

| | |
|---|---|
| | Is the voltage greater than 10 volts?<br>**Yes**<br>GO to AH2.<br>**No**<br>REPAIR the circuit between the IMT valve electrical connector and battery. This circuit includes fuse 37 of the front power distribution box and the EMS control relay. For additional information, refer to the wiring diagrams. CLEAR the DTC and test the system for normal operation. |

**AH2: CHECK THE IMT VALVE DRIVE CIRCUIT FOR SHORT CIRCUIT TO GROUND**

1. Key off.
2. Measure the resistance between:

| IMT valve connector PI31, harness side | Battery |
|---|---|
| Pin 02 | Negative terminal |

| | |
|---|---|
| | Is the resistance less than 10,000 ohms?<br>**Yes**<br>REPAIR the short circuit. For additional information, refer to the wiring diagrams. CLEAR the DTC and test the system for normal operation.<br>**No**<br>GO to AH3. |

**AH3: CHECK THE IMT VALVE DRIVE CIRCUIT FOR SHORT CIRCUIT TO POWER**

1. Measure the resistance between:

| IMT valve connector PI31, harness side | Battery |
|---|---|
| Pin 02 | Positive terminal |

| | |
|---|---|
| | Is the resistance less than 10,000 ohms?<br>**Yes**<br>REPAIR the short circuit. For additional information, refer to the wiring diagrams. CLEAR the DTC and test the system for normal operation.<br>**No**<br>GO to AH4. |

**AH4: CHECK THE IMT VALVE DRIVE CIRCUIT FOR HIGH RESISTANCE**

1. Disconnect the ECM electrical connector, PI300.
2. Measure the resistance between:

| IMT valve connector PI31, harness side | ECM connector PI300, harness side |
|---|---|
| Pin 02 | Pin 90 |

| | |
|---|---|
| | Is the resistance greater than 5 ohms?<br>**Yes**<br>REPAIR the high resistance circuit. For additional information, refer to the wiring diagrams. CLEAR the DTC and test the system for normal operation.<br>**No**<br>INSTALL a new IMT valve,<br>REFER to: Intake Manifold Tuning (IMT) Valve LH (303-14A Electronic Engine Controls - 2.5L NA V6 - AJV6/3.0L NA V6 - AJ27, Removal and Installation).<br>CLEAR the DTC and test the system for normal operation. |

## PINPOINT TEST AI : BRAKE SWITCH

| TEST CONDITIONS | DETAILS/RESULTS/ACTIONS |
|---|---|

**AI1: CHECK THE OPERATION OF THE BRAKE SWITCH (PEDAL RELEASED)**

1. Key off.
2. Disconnect the brake switch electrical connector, CA37.
3. Make sure the brake pedal is not pressed.
4. Measure the resistance between:

| Brake switch connector CA37, component side | Brake switch connector CA37, component side |
|---|---|
| Pin 01 | Pin 02 |

GETtheMANUALS.org

Is the resistance greater than 5 ohms?

**Yes**

GO to AI2.

**No**

INSTALL a new brake switch. CLEAR the DTC and test the system for normal operation.

**AI2: CHECK THE OPERATION OF THE BRAKE SWITCH (PEDAL PRESSED)**

1. Press the brake pedal.
2. Measure the resistance between:

| Brake switch connector CA37, component side | Brake switch connector CA37, component side |
|---|---|
| Pin 01 | Pin 02 |

Is the resistance greater than 5 ohms?

**Yes**

INSTALL a new brake switch. CLEAR the DTC and test the system for normal operation.

**No**

GO to AI3.

**AI3: CHECK THE POWER SUPPLY TO THE BRAKE PEDAL SWITCH**

1. Key on, engine off.
2. Measure the voltage between:

| Brake switch connector CA37, harness side | Battery |
|---|---|
| Pin 01 | Negative terminal |

Is the voltage less than 10 volts?

**Yes**

REPAIR the circuit between the brake switch and battery. This circuit includes fuse 35 of the primary junction box. For additional information, refer to the wiring diagrams. CLEAR the DTC and test the system for normal operation.

**No**

GO to AI4.

**AI4: CHECK THE BRAKE SWITCH SIGNAL CIRCUIT FOR SHORT CIRCUIT TO GROUND**

1. Key off.
2. Measure the resistance between:

| Brake switch connector CA37, harness side | Battery |
|---|---|
| Pin 02 | Negative terminal |

Is the resistance less than 10,000 ohms?

**Yes**

REPAIR the short circuit. For additional information, refer to the wiring diagrams. CLEAR the DTC and test the system for normal operation.

**No**

GO to AI5.

**AI5: CHECK THE BRAKE SWITCH SIGNAL CIRCUIT FOR SHORT CIRCUIT TO POWER**

1. Measure the resistance between:

| Brake switch connector CA37, harness side | Battery |
|---|---|
| Pin 02 | Positive terminal |

Is the resistance less than 10,000 ohms?

**Yes**

REPAIR the short circuit. For additional information, refer to the wiring diagrams. CLEAR the DTC and test the system for normal operation.

**No**

GO to AI6.

**AI6: CHECK THE BRAKE SWITCH SIGNAL CIRCUIT FOR HIGH RESISTANCE**

1. Disconnect the ECM electrical connector, FH300.
2. Measure the resistance between:

| Brake switch connector CA37, harness side | ECM connector FH300, harness side |
|---|---|
| Pin 02 | Pin 41 |

Is the resistance greater than 5 ohms?

**Yes**

REPAIR the high resistance circuit. For additional information, refer to the wiring diagrams. CLEAR the DTC and test the system for normal operation.

**No**

REFER to the warranty policy and procedures manual if an ECM is suspect.

## PINPOINT TEST AJ : AIR CONDITIONING (A/C) COMPRESSOR CLUTCH CONTROL CIRCUIT

| TEST CONDITIONS | DETAILS/RESULTS/ACTIONS |
|---|---|

**AJ1: CHECK THE A/C CLUTCH RELAY CONTROL CIRCUIT FOR SHORT CIRCUIT TO GROUND**

1. Remove the A/C clutch relay.
2. Key on, engine off.
3. Measure the resistance between:

| A/C clutch relay base | Battery |
|---|---|
| Pin 02 | Negative terminal |

Is the resistance less than 10,000 ohms?

**Yes**

REPAIR the short circuit. For additional information, refer to the wiring diagrams. CLEAR the DTC and test the system for normal operation.

**No**

GO to AJ2.

**AJ2: CHECK THE A/C CLUTCH RELAY CONTROL CIRCUIT FOR SHORT CIRCUIT TO POWER**

1. Measure the resistance between:

| A/C clutch relay base | Battery |
|---|---|
| Pin 02 | Positive terminal |

Is the resistance less than 10,000 ohms?

**Yes**

REPAIR the short circuit. For additional information, refer to the wiring diagrams. CLEAR the DTC and test the system for normal operation.

**No**

GO to AJ3.

GETtheMANUALS.org

**AJ3: CHECK THE A/C CLUTCH RELAY CONTROL CIRCUIT FOR HIGH RESISTANCE**

1 Disconnect the ECM electrical connector, FH300.

2 Measure the resistance between:

| A/C clutch relay base | ECM connector FH300, harness side |
|---|---|
| Pin 02 | Pin 53 |

Is the resistance greater than 5 ohms?

**Yes**

REPAIR the high resistance circuit. For additional information, refer to the wiring diagrams. CLEAR the DTC and test the system for normal operation.

**No**

INSTALL a new A/C clutch relay. CLEAR the DTC and test the system for normal operation. If the DTC is reset, refer to the warranty policy and procedures manual if an ECM is suspect.

## PINPOINT TEST AK : CLUTCH PEDAL SWITCH

| TEST CONDITIONS | DETAILS/RESULTS/ACTIONS |
|---|---|

### AK1: CHECK THE OPERATION OF THE CLUTCH PEDAL SWITCH (PEDAL RELEASED)

1 Key off.

2 Disconnect the clutch pedal electrical connector, (right hand drive vehicles) CA285 or (left hand drive vehicles) CA291.

3 Make sure the clutch pedal is not pressed.

4 Measure the resistance between:

**Right hand drive vehicles**

| Clutch pedal switch connector CA285, component side | Clutch pedal switch connector CA285, component side |
|---|---|
| Pin 01 | Pin 02 |

**Left hand drive vehicles**

| Clutch pedal switch connector CA291, component side | Clutch pedal switch connector CA291, component side |
|---|---|
| Pin 01 | Pin 02 |

Is the resistance greater than 5 ohms?

**Yes**

GO to AK2.

**No**

INSTALL a new clutch pedal switch. CLEAR the DTC and test the system for normal operation.

### AK2: CHECK THE OPERATION OF THE CLUTCH PEDAL SWITCH (PEDAL PRESSED)

1 Press the clutch pedal.

2 Measure the resistance between:

**Right hand drive vehicles**

| Clutch pedal switch connector CA285, component side | Clutch pedal switch connector CA285, component side |
|---|---|
| Pin 01 | Pin 02 |

**Left hand drive vehicles**

| Clutch pedal switch connector CA291, component side | Clutch pedal switch connector CA291, component side |
|---|---|
| Pin 01 | Pin 02 |

Is the resistance greater than 5 ohms?

**Yes**

INSTALL a new clutch pedal switch. CLEAR the DTC and test the system for normal operation.

**No**

GO to AK3.

### AK3: CHECK THE CLUTCH PEDAL SWITCH TO ECM INPUT CIRCUIT FOR SHORT CIRCUIT TO GROUND

1 Measure the resistance between:

**Right hand drive vehicles**

| Clutch pedal switch connector CA285, harness side | Battery |
|---|---|
| Pin 01 | Negative terminal |

**Left hand drive vehicles**

| Clutch pedal switch connector CA291, harness side | Battery |
|---|---|
| Pin 01 | Negative terminal |

Is the resistance less than 10,000 ohms?

**Yes**

REPAIR the short circuit. For additional information, refer to the wiring diagrams. CLEAR the DTC and test the system for normal operation.

**No**

GO to AK4.

### AK4: CHECK THE CLUTCH PEDAL SWITCH TO ECM INPUT CIRCUIT FOR SHORT CIRCUIT TO POWER

1 Measure the resistance between:

**Right hand drive vehicles**

| Clutch pedal switch connector CA285, harness side | Battery |
|---|---|
| Pin 01 | Positive terminal |

**Left hand drive vehicles**

| Clutch pedal switch connector CA291, harness side | Battery |
|---|---|
| Pin 01 | Positive terminal |

Is the resistance less than 10,000 ohms?

**Yes**

REPAIR the short circuit. For additional information, refer to the wiring diagrams. CLEAR the DTC and test the system for normal operation.

**No**

GO to AK5.

### AK5: CHECK THE CLUTCH PEDAL SWITCH TO ECM INPUT CIRCUIT FOR HIGH RESISTANCE

1 Disconnect ECM electrical connector FH300

2 Measure the resistance between:

**Right hand drive vehicles**

| Clutch pedal switch connector CA285, harness side | ECM connector FH300, harness side |
|---|---|
| Pin 01 | Pin 43 |

GETtheMANUALS.org

**Left hand drive vehicles**

| Clutch pedal switch connector CA291, harness side | ECM connector FH300, harness side |
|---|---|
| Pin 01 | Pin 43 |

Is the resistance greater than 5 ohms?

**Yes**

REPAIR the high resistance circuit. For additional information, refer to the wiring diagrams. CLEAR the DTC and test the system for normal operation.

**No**

GO to AK6.

**AK6: CHECK THE CLUTCH PEDAL SWITCH GROUND CIRCUIT FOR HIGH RESISTANCE**

1 Measure the resistance between:

**Right hand drive vehicles**

| Clutch pedal switch connector CA285, harness side | Battery |
|---|---|
| Pin 02 | Negative terminal |

**Left hand drive vehicles**

| Clutch pedal switch connector CA291, harness side | Battery |
|---|---|
| Pin 02 | Negative terminal |

Is the resistance greater than 5 ohms?

**Yes**

REPAIR the high resistance circuit. For additional information, refer to the wiring diagrams. CLEAR the DTC and test the system for normal operation.

**No**

Refer to the warranty policy and procedures manual if an ECM is suspect.

GETtheMANUALS.org

# Electronic Engine Controls - 2.5L NA V6 - AJV6 / 3.0L NA V6 - AJ27 - Powertrain Control Module (PCM) Long Drive Cycle Self-Test

General Procedures

WARNING: Where possible, all road tests should be on well surfaced and dry roads. Always comply with speed limits and local traffic regulations.

• NOTE: This procedure is an overcheck only. If fault codes are found, interrogation of the relevant system must be carried out and claimed against.

• NOTE: The vehicle must exceed 50mph (80 km/h) during the road test.

**1.** Connect the diagnostic equipment to the vehicle.

**2.** Follow on screen prompts and check for engine management fault codes.

**3.** Clear the fault codes following the on screen procedure.

**4.** Disconnect the diagnostic equipment from the vehicle.

**5.** NOTE: Make sure cruise control is not engaged.

Make sure the engine temperature is above 60 ºC (140 ºF).

Carry out a road test and perform the following operations.

1. Accelerate to 55 mph (88 km/h) in 5th gear and cruise for 2 minutes with the engine speed at or above 1800rpm.
2. Lift off the throttle and allow the vehicle to decelerate until the engine speed is less than 1000 rpm.
3. Stop the vehicle.
4. Release brake, allow the vehicle to move with no throttle for 1 minute.
5. Road test is now complete.

**6.** Connect the diagnostic equipment to the vehicle.

**7.** NOTE: If fault codes are found, interrogation of the relevant system must be carried out and claimed against.

Follow on screen prompts and check for engine management fault codes.

**8.** Disconnect the diagnostic equipment from the vehicle.

GETtheMANUALS.org

# Electronic Engine Controls - 2.5L NA V6 - AJV6 / 3.0L NA V6 - AJ27 - Powertrain Control Module (PCM) Short Drive Cycle Self-Test

General Procedures

• NOTE: This procedure is an overcheck only. If fault codes are found, interrogation of the relevant system must be carried out and claimed against.

1. Connect the diagnostic equipment to the vehicle.
2. Follow on screen prompts and check for engine management fault codes.
3. Clear the fault codes following the on screen procedure.
4. Start the engine.
   - Allow the engine to idle for 30 seconds.
   - Raise the engine speed to 1500 rpm and hold for 3 minutes until a temperature of 70°C (158 °F) is achieved.
   - Allow the engine to idle for 30 seconds.
   - Switch off the engine.
5. NOTE: If fault codes are found, interrogation of the relevant system must be carried out and claimed against.

   Follow on screen prompts and check for engine management fault codes.
6. Disconnect the diagnostic equipment from the vehicle.

GETtheMANUALS.org

# Electronic Engine Controls - 2.5L NA V6 - AJV6 / 3.0L NA V6 - AJ27 - Brake Pedal Position (BPP) Switch

Removal and Installation

## Removal

1. Switch the ignition on.
2. Position the front seat fully rearwards.
3. Switch the ignition off.
4. Remove the driver's side footwell trim panel.
   - Release the 3 clips.

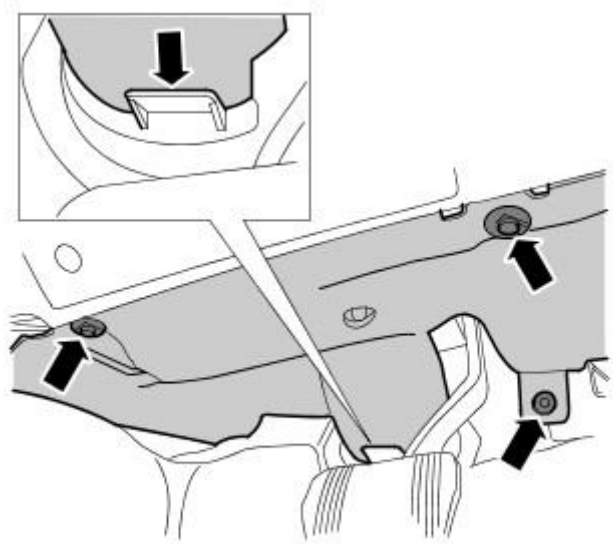

E102662

5. Release the brake pedal position (BPP) switch.
   - Rotate the BPP switch 45 degrees counter-clockwise.

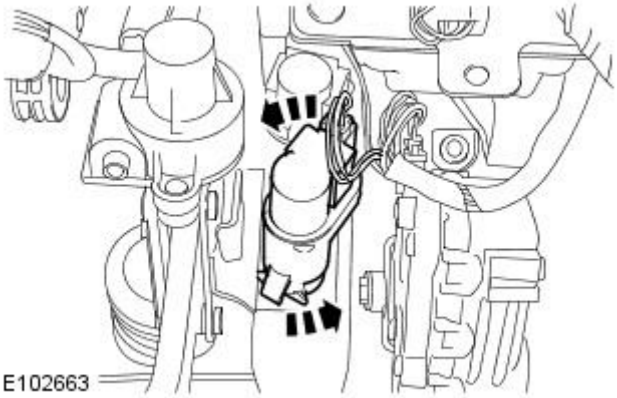

E102663

6. Remove the BPP switch.
   - Disconnect the electrical connector.

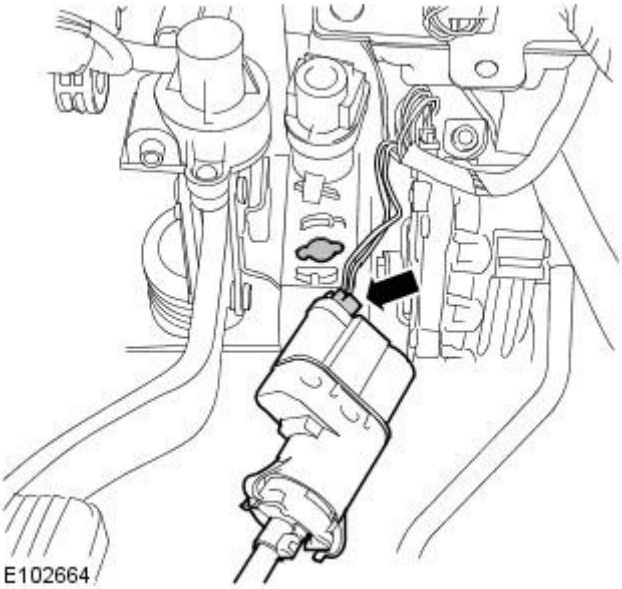

E102664

## Installation

GETtheMANUALS.org

1. CAUTIONS:

Make sure that the brake pedal remains in the rest position during this procedure.

The bracket is keyed to avoid incorrect orientation. Failure to correctly align the switch may result in damage to the vehicle.

Make sure that the pedal box, booster-to-brake pedal assembly and switch bracket are all installed correctly before installing the switch.

Install the BPP switch.

- Locate the BPP switch in the bracket.
- Rotate the BPP switch 45 degrees clockwise.

**2.** Connect the electrical connector.

**3.** Install the driver's side footwell trim panel.

- Align the trim panel with the guide.
- Install the 3 clips.

GETtheMANUALS.org

# Electronic Engine Controls - 2.5L NA V6 - AJV6 / 3.0L NA V6 - AJ27 - Camshaft Position (CMP) Sensor LH

Removal and Installation

## Removal

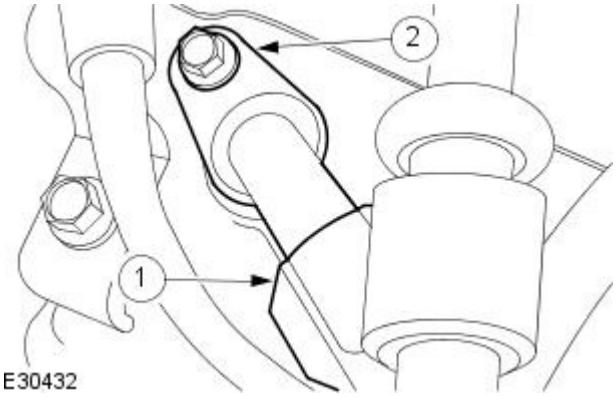


1. Disconnect the battery ground cable.
   For additional information, refer to Section 414-01 Battery, Mounting and Cables.
2. Remove the air cleaner outlet pipe. For additional information, refer to Section 303-12A Intake Air Distribution and Filtering / 303-12B Intake Air Distribution and Filtering / 303-12C Intake Air Distribution and Filtering.
3. Remove the CMP sensor.
   1. Disconnect the CMP sensor electrical connector
   2. Remove the CMP sensor.
   - Remove and discard the CMP sensor O-ring seal.

## Installation

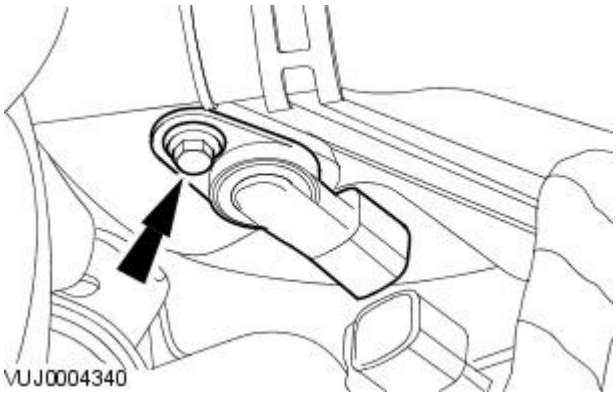


1. To install, reverse the removal procedure.
   - Install a new CMP sensor O-ring seal.
   - Tighten the CMP sensor retaining bolt to 7 Nm.

GETtheMANUALS.org

# Electronic Engine Controls - 2.5L NA V6 - AJV6 / 3.0L NA V6 - AJ27 - Camshaft Position (CMP) Sensor RH

Removal and Installation

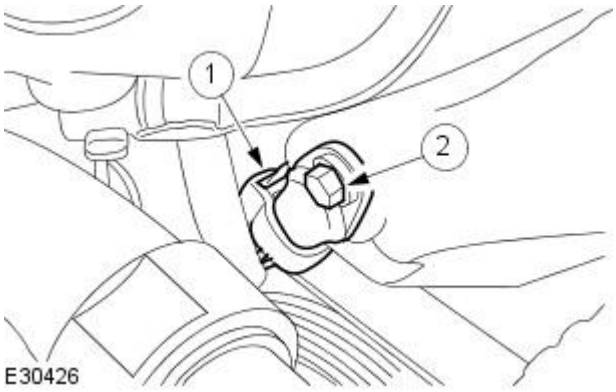


1. Remove the throttle body. For additional information, refer to Section 303-04A Fuel Charging and Controls / 303-04B Fuel Charging and Controls / 303-04C Fuel Charging and Controls / 303-04D Fuel Charging and Controls - Turbocharger.
2. Remove the CMP sensor.
    1. Disconnect the CMP sensor electrical connector
    2. Remove the CMP sensor.
    - Remove and discard the CMP sensor O-ring seal.

## Installation

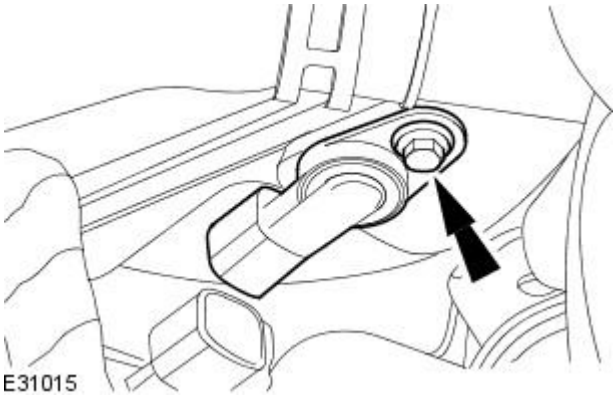


1. To install, reverse the removal procedure.
    - Install a new CMP sensor O-ring seal.
    - Tighten the CMP sensor retaining bolt to 7 Nm.

GETtheMANUALS.org

# Electronic Engine Controls - 2.5L NA V6 - AJV6 / 3.0L NA V6 - AJ27 - Catalyst Monitor Sensor

Removal and Installation

**General Equipment**

| |
|---|
| Snap-on tool S6176 |

## Removal

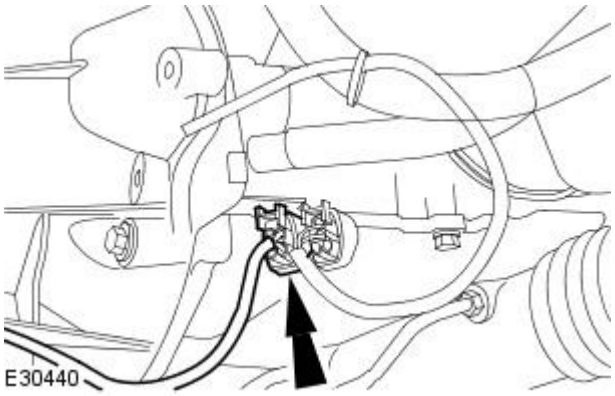


**1.** Raise and support the vehicle.
For additional information, refer to Section 100-02 Jacking and Lifting.

**2.** Disconnect the catalyst monitor sensor.

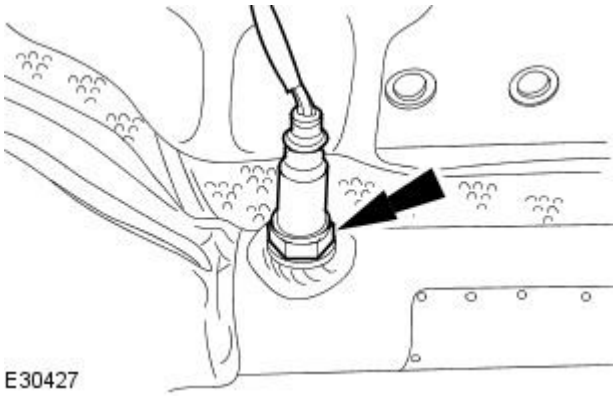


**3.** CAUTION: Make sure the wiring harness is not twisted or damaged on removal. Failure to follow this instruction may result in damage to the vehicle.

Using the Snap-on tool S6176, remove the catalyst monitor sensor.

## Installation

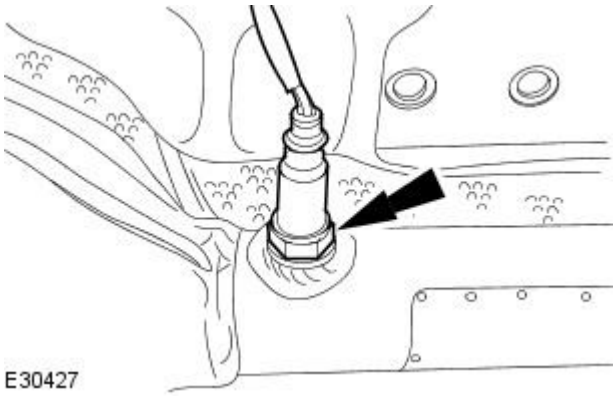


**1.** CAUTION: Make sure the wiring harness is not twisted or damaged on installation. Failure to follow this instruction may result in damage to the vehicle.

To install, reverse the removal procedure.

- Tighten to 45 Nm.

GETtheMANUALS.org

# Electronic Engine Controls - 2.5L NA V6 - AJV6 / 3.0L NA V6 - AJ27 - Crankshaft Position (CKP) Sensor

Removal and Installation

## Removal

1. Disconnect the battery ground cable.
   For additional information, refer to Section 414-01 Battery, Mounting and Cables.
2. Remove the air deflector
   For additional information, refer to Section 501-02 Front End Body Panels.
3. Disconnect the crankshaft position (CKP) sensor electrical connector.

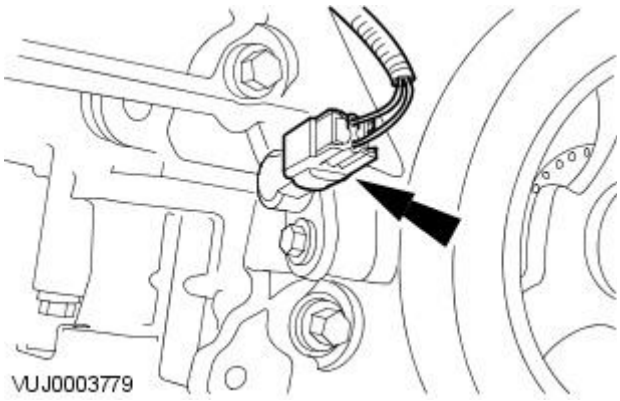


4. Remove the CKP sensor.
   - Remove and discard the CKP sensor O-ring seal.

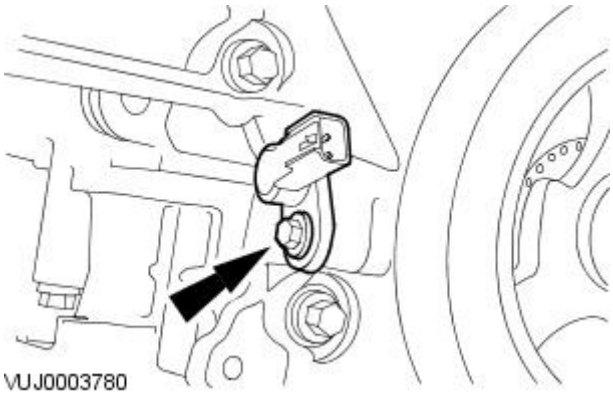


## Installation

1. To install, reverse the removal procedure.
   - Install a new CKP sensor O-ring seal.
   - Tighten to 7 Nm.

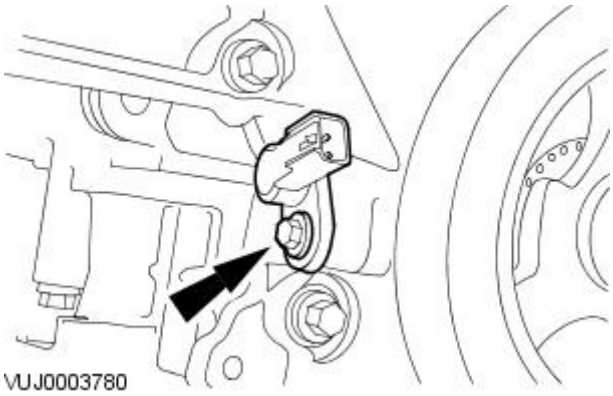


GETtheMANUALS.org

# Electronic Engine Controls - 2.5L NA V6 - AJV6 / 3.0L NA V6 - AJ27 - Engine Control Module (ECM)

Removal and Installation

| Special Tool(s) | |
|---|---|
| 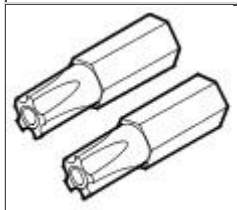 418-535 | 5 point security torx bit<br><br>418-535 |

## Removal

1. Disconnect the battery ground cable.
   For additional information, refer to Section 414-01 Battery, Mounting and Cables.
2. Remove the cabin air filter.
   For additional information, refer to Section 412-01 Air Distribution and Filtering.
3. Remove the engine compartment support.

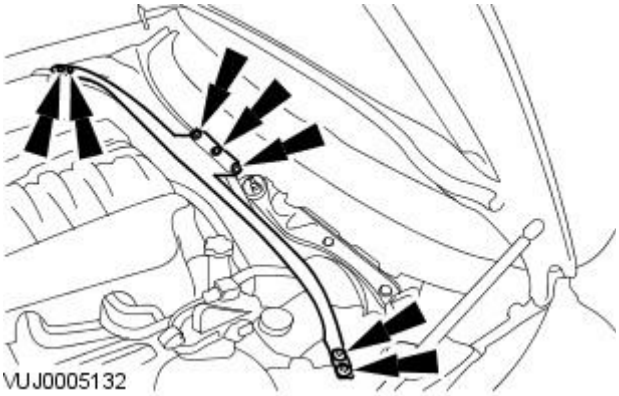


4. Remove the cabin air filter housing retaining nut.

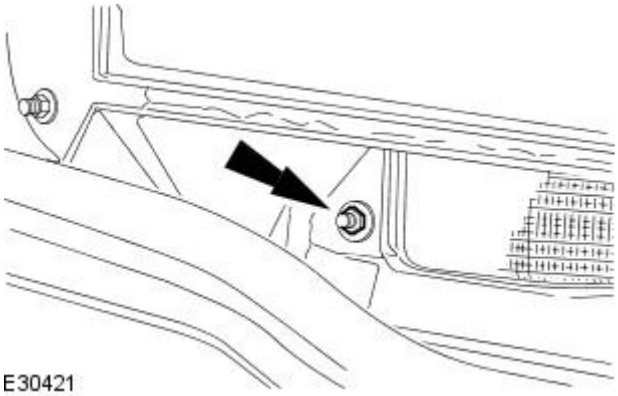


5. Remove the cabin air filter housing.

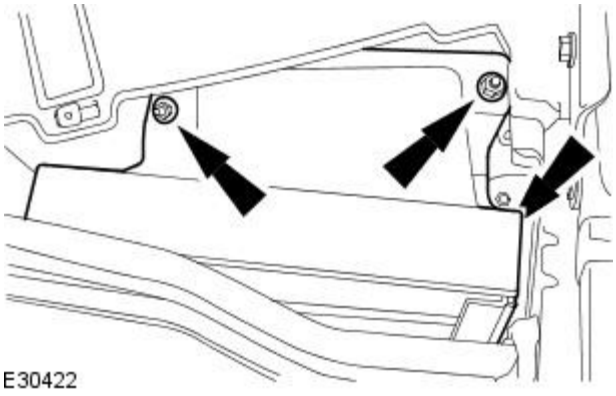


GETtheMANUALS.org

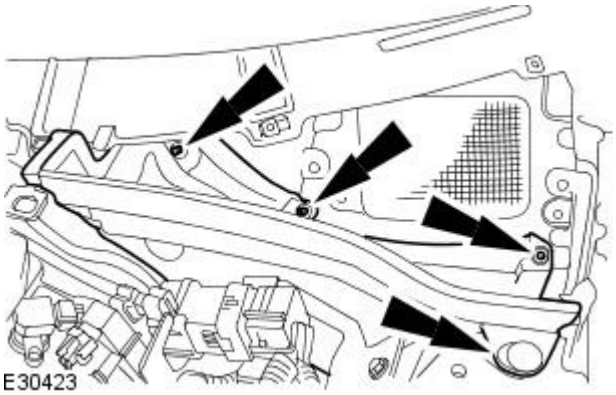


**6.** Remove the engine compartment panel.

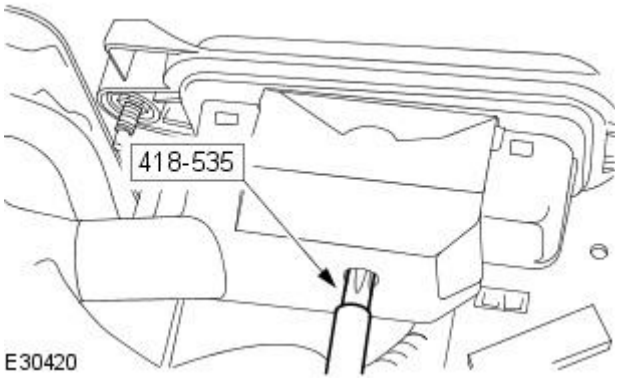


**7.** NOTE: The engine control module (ECM) electrical connector retaining bolt remains captive in the electrical connector

Using the special tool, disconnect the ECM electrical connector.

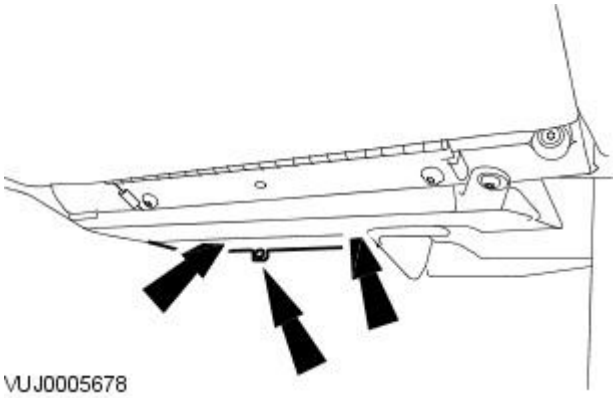


**8.** Remove the passenger side instrument panel lower trim panel.

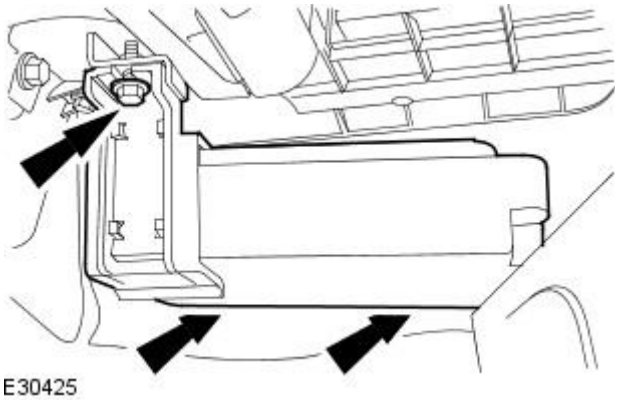


**9.** Remove the ECM.

- Remove the ECM retaining bracket.
- Release the ECM retaining tangs.
- Remove the ECM.

## Installation

**1.** CAUTION: Make sure the electrical connector locate correctly in the engine control module. Do not force or overtighten the electrical connector. Failure to follow these instructions may cause damage to the electrical connector.

To install, reverse the removal procedure.

GETtheMANUALS.org

**2.** Tighten to 6 Nm.

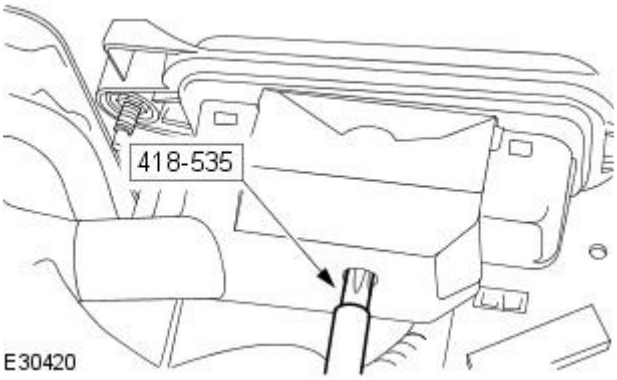


GETtheMANUALS.org

# Electronic Engine Controls - 2.5L NA V6 - AJV6 / 3.0L NA V6 - AJ27 - Engine Coolant Temperature (ECT) SensorVIN Range: M45255->N52047

Removal and Installation

## Removal

**1.** WARNINGS:

Never remove the coolant expansion tank pressure cap under any circumstances while the engine is operating. Failure to follow this instruction may result in personal injury.

To avoid hot coolant or steam blowing out of the cooling system, use extreme care when removing the coolant expansion tank pressure cap. Wait until the engine has cooled down, then insulate the coolant pressure cap with a suitable cloth and slowly loosen the coolant expansion tank pressure cap until the cooling system pressure is released. Do not remove the coolant expansion tank pressure cap. Step back while the pressure is released from the system. When all of the pressure has been released slowly remove the coolant expansion tank pressure cap (still with the suitable cloth in position) from the coolant expansion tank. Failure to follow this instruction may result in personal injury.

Release the cooling system pressure.

- Remove the coolant expansion tank pressure cap.

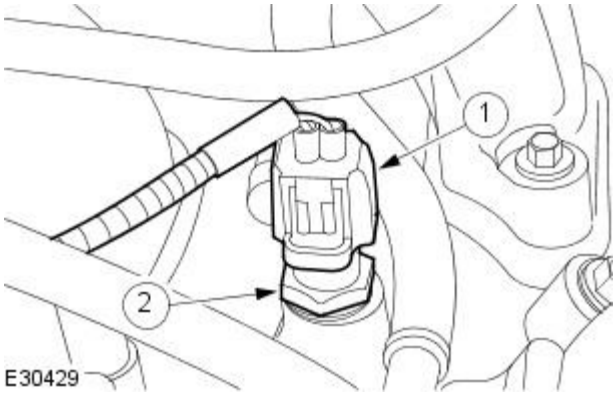


**2.** Remove the engine coolant temperature (ECT) sensor.

1. Disconnect the ECT electrical connector.
2. Remove the ECT sensor.

- Remove and discard the ECT sensor sealing washer.

## Installation

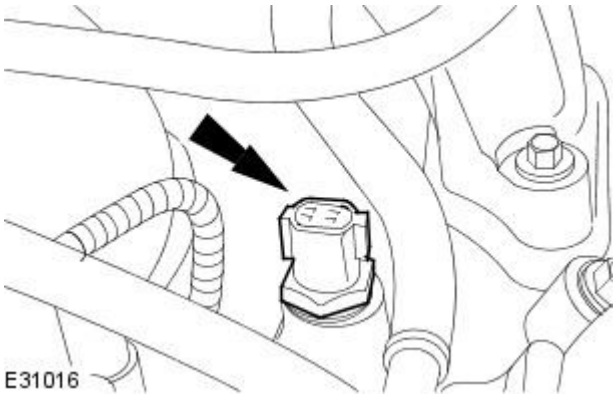


**1.** To install, reverse the removal procedure.

- Install a new ECT sensor sealing washer.
- Tighten the ECT sensor to 17 Nm.
- Fill the cooling system up to the MAX mark on the coolant expansion tank.

GETtheMANUALS.org

# Electronic Engine Controls - 2.5L NA V6 - AJV6 / 3.0L NA V6 - AJ27 - Engine Coolant Temperature (ECT) SensorVIN Range: N52048->N99999

Removal and Installation

## Removal

**1.** WARNINGS:

Never remove the coolant expansion tank pressure cap under any circumstances while the engine is operating. Failure to follow this instruction may result in personal injury.

To avoid hot coolant or steam blowing out of the cooling system, use extreme care when removing the coolant expansion tank pressure cap. Wait until the engine has cooled down, then insulate the coolant pressure cap with a suitable cloth and slowly loosen the coolant expansion tank pressure cap until the cooling system pressure is released. Do not remove the coolant expansion tank pressure cap. Step back while the pressure is released from the system. When all of the pressure has been released slowly remove the coolant expansion tank pressure cap (still with the suitable cloth in position) from the coolant expansion tank. Failure to follow this instruction may result in personal injury.

Release the cooling system pressure.

- Remove the coolant expansion tank pressure cap.

**2.** Remove the air cleaner outlet pipe.
For additional information, refer to: Air Cleaner Outlet Pipe - VIN Range: N52048->N99999 (303-12A Intake Air Distribution and Filtering - 2.5L NA V6 - AJV6/3.0L NA V6 - AJ27, Removal and Installation).

**3.** Disconnect the engine coolant temperature (ECT) sensor electrical connector.

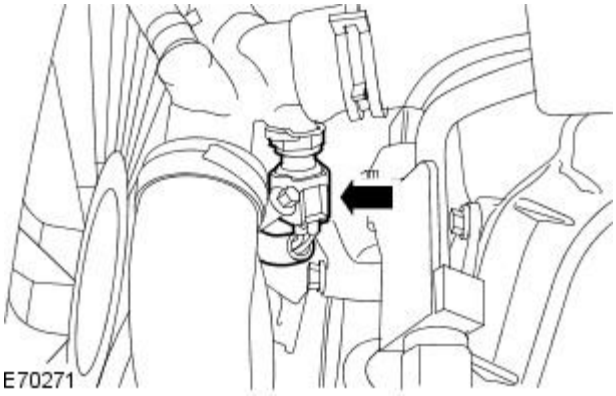


**4.** Remove the ECT sensor.

- Remove the ECT sensor retaining clip.
- Remove and discard the ECT sensor sealing washer.

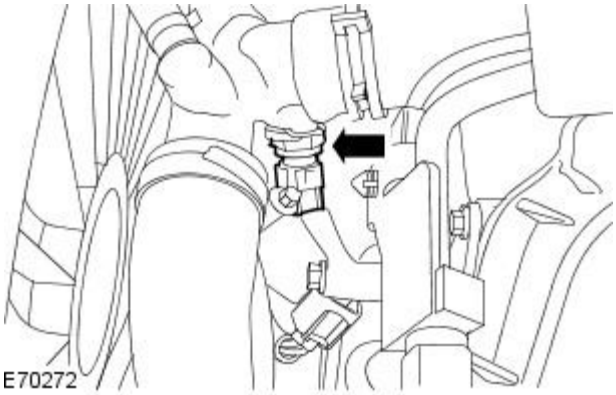


## Installation

**1.** To install, reverse the removal procedure.

- Install a new ECT sensor sealing washer.

**2.** Fill the cooling system up to the MAX mark on the coolant expansion tank.

GETtheMANUALS.org

# Electronic Engine Controls - 2.5L NA V6 - AJV6 / 3.0L NA V6 - AJ27 - Fuel Temperature Sensor

Removal and Installation

## Removal

1. Disconnect the battery ground cable.
2. Remove the air outlet tube. For additional information, refer toSection 303-12A Intake Air Distribution and FilteringSection 303-12B Intake Air Distribution and FilteringSection 303-12C Intake Air Distribution and Filtering
3. Detach the spring lock coupling safety clip.

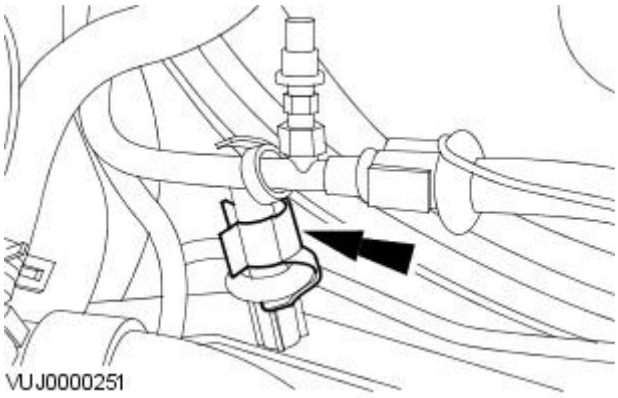


4. Disconnect the electrical connector.

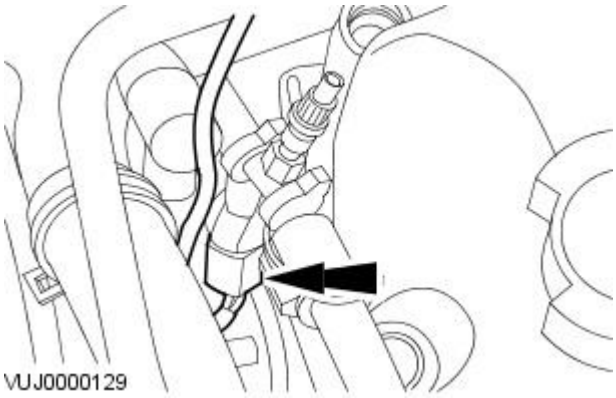


5. Remove the fuel temperature sensor. For additional information, refer to Section 310-00 Fuel System - General Information

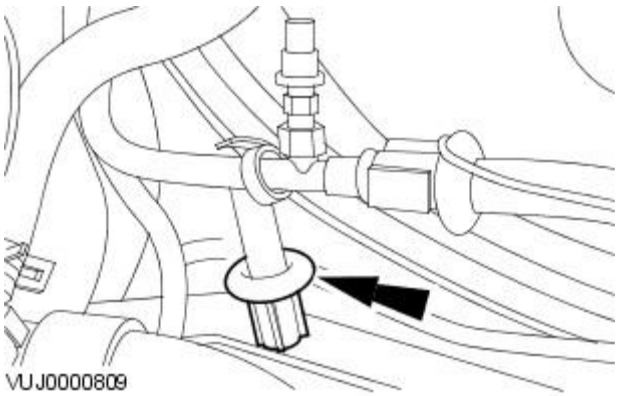


## Installation

1. To install, reverse removal procedure.

GETtheMANUALS.org

# Electronic Engine Controls - 2.5L NA V6 - AJV6 / 3.0L NA V6 - AJ27 - Heated Oxygen Sensor (HO2S)

Removal and Installation

**General Equipment**

| |
|---|
| Snap-on tool S6176 |

## Removal

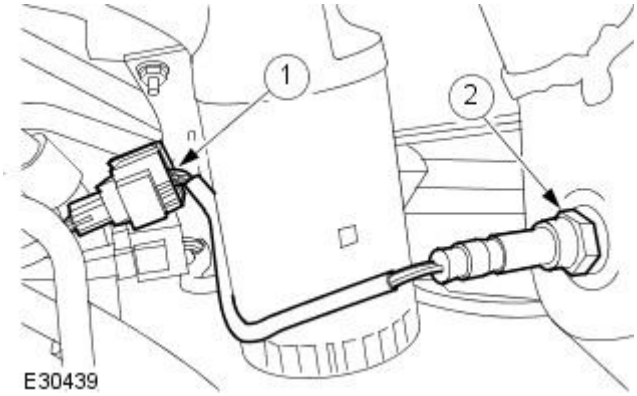


**1.** Remove the air deflector.
For additional information, refer to Section 501-02 Front End Body Panels.

**2.** CAUTION: Make sure the wiring harness is not twisted or damaged on removal. Failure to follow this instruction may result in damage to the vehicle.

Using the Snap-on tool S6176, remove the HO2S.

1. Disconnect the HO2S electrical connector.
2. Using the Snap-on tool S6176, remove the HO2S.

## Installation

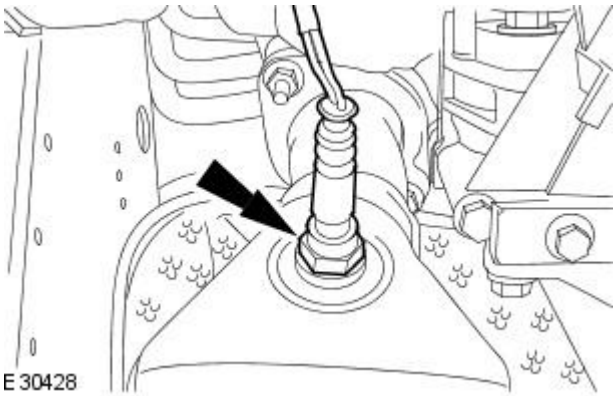


**1.** CAUTION: Make sure the wiring harness is not twisted or damaged on installation. Failure to follow this instruction may result in damage to the vehicle.

To install, reverse the removal procedure.

- Tighten to 45 Nm.

GETtheMANUALS.org

# Electronic Engine Controls - 2.5L NA V6 - AJV6 / 3.0L NA V6 - AJ27 - Intake Manifold Tuning (IMT) Valve LH

Removal and Installation

## Removal

1. Remove the cowl vent screen.
   For additional information, refer to Section 501-02 Front End Body Panels.
2. Remove the engine compartment support.

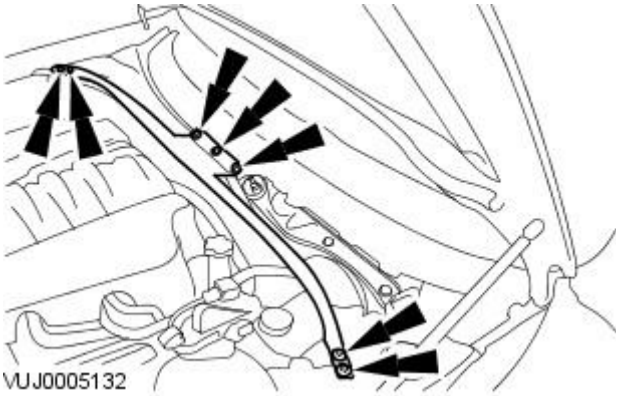


3. Disconnect the intake manifold tuning (IMT) valve electrical connector.

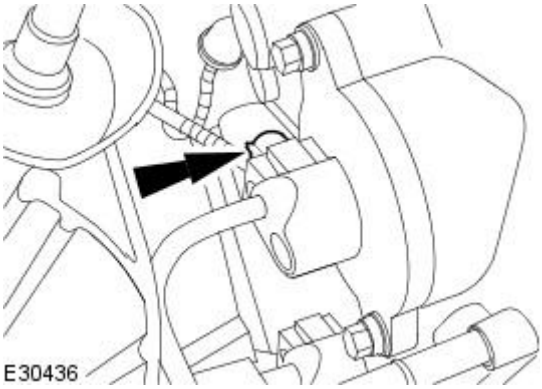


4. Remove the IMT valve.

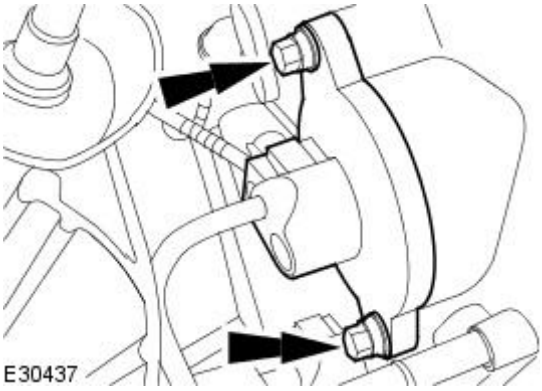


## Installation

1. To install, reverse the removal procedure.
   - Tighten to 10 Nm.

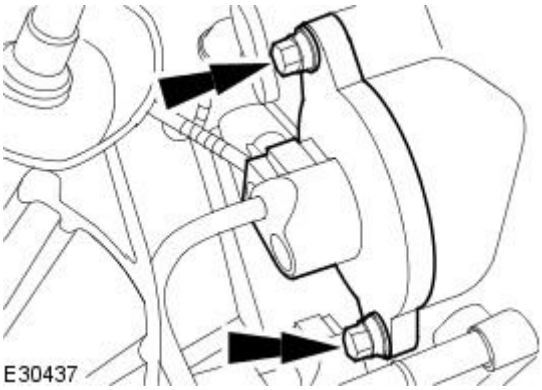


GETtheMANUALS.org

# Electronic Engine Controls - 2.5L NA V6 - AJV6 / 3.0L NA V6 - AJ27 - Knock Sensor (KS) LH

Removal and Installation

## Removal

1. Remove the fuel supply manifold. For additional information, refer to Section 303-04A Fuel Charging and Controls / 303-04B Fuel Charging and Controls / 303-04C Fuel Charging and Controls / 303-04D Fuel Charging and Controls - Turbocharger.
2. Disconnect the knock sensor electrical connector.

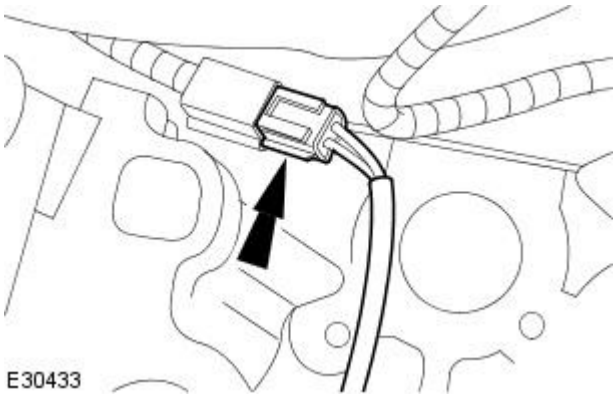


3. Remove the knock sensor.

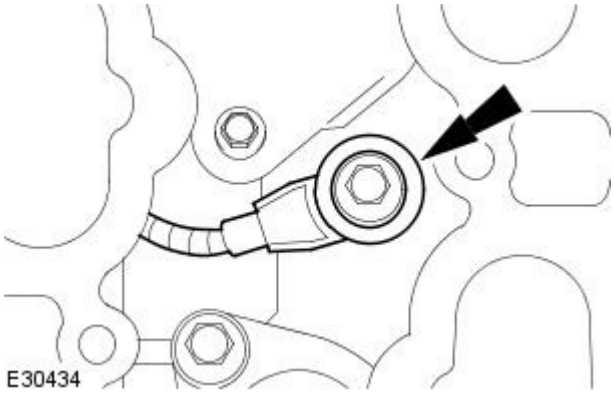


## Installation

1. To install, reverse the removal procedure.
   - Tighten to 25 Nm.

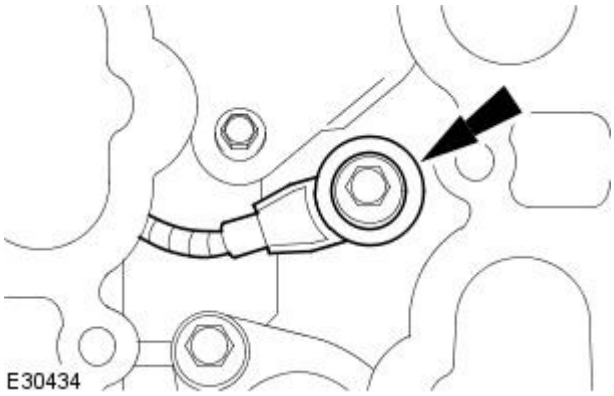


GETtheMANUALS.org

# Electronic Engine Controls - 2.5L NA V6 - AJV6 / 3.0L NA V6 - AJ27 - Knock Sensor (KS) RH

Removal and Installation

## Removal

1. Remove the air deflector.
   For additional information, refer to Section 501-02 Front End Body Panels.
2. Disconnect the knock sensor electrical connector.

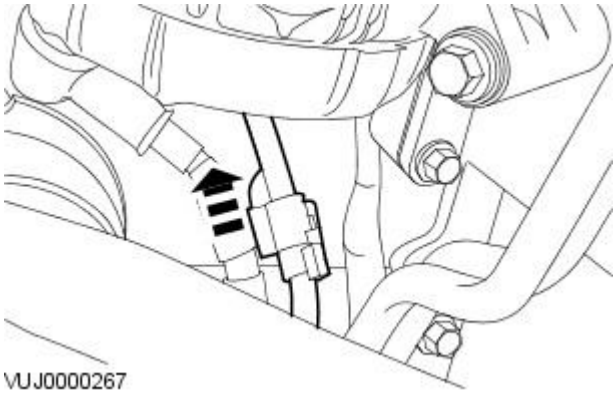


3. Remove the knock sensor.

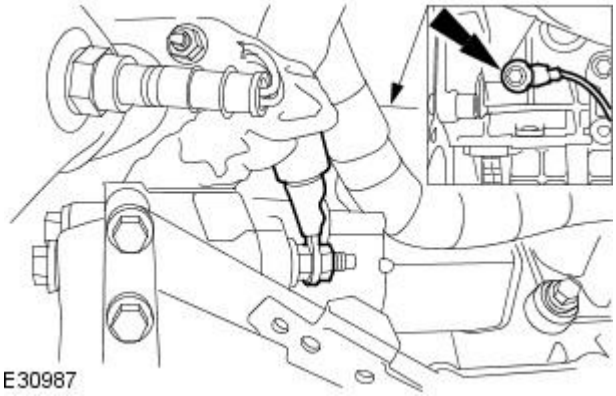


## Installation

1. To install, reverse the removal procedure.

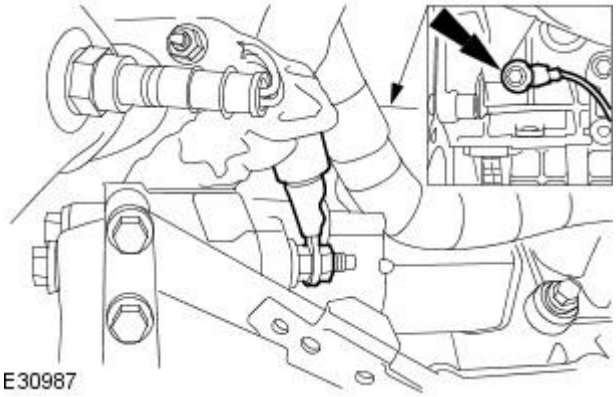


GETtheMANUALS.org

# Electronic Engine Controls - 2.5L NA V6 - AJV6 / 3.0L NA V6 - AJ27 - Manifold Absolute Pressure (MAP) Sensor

Removal and Installation

## Removal

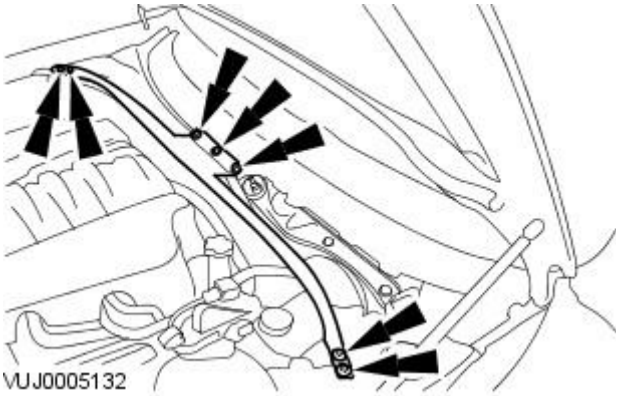


1. Remove the cowl vent screen.
   For additional information, refer to: Cowl Panel Grille (501-02 Front End Body Panels, Removal and Installation).
2. Remove the engine compartment support.

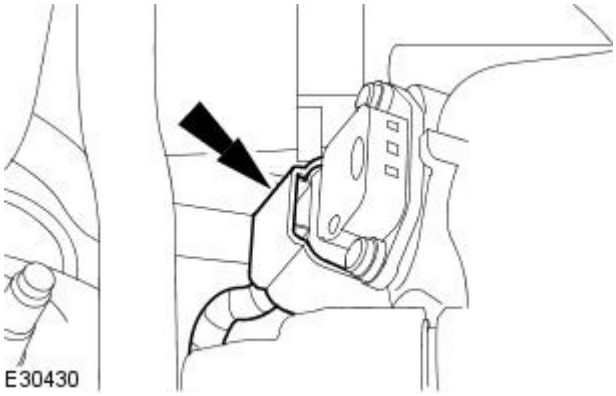


3. Disconnect the manifold absolute pressure (MAP) sensor electrical connector.

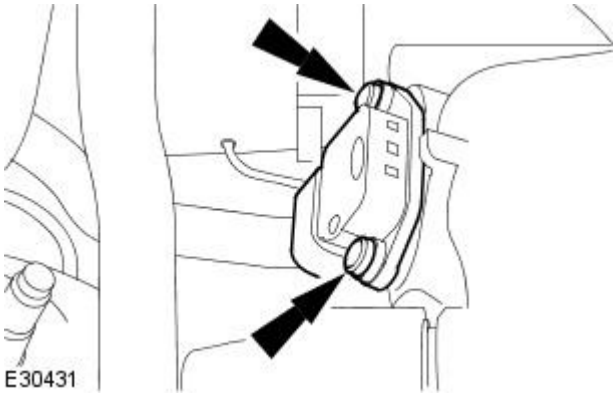


4. Remove the MAP sensor.
   - Remove the and discard the MAP sensor O-ring seal.

## Installation

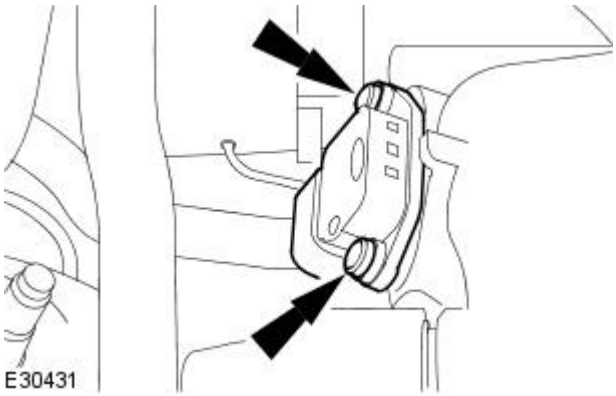


1. To install, reverse the removal procedure.
   - Install a new MAP sensor O-ring seal.
   - Tighten to 10 Nm.
2. NOTE: For NAS vehicles only.

   If required, carry out a short drive cycle.
   For additional information, refer to: Powertrain Control Module (PCM)

Short Drive Cycle Self-Test (303-14A Electronic Engine Controls - 2.5L NA V6 - AJV6/3.0L NA V6 - AJ27, General Procedures).

GETtheMANUALS.org

# Electronic Engine Controls - 2.5L NA V6 - AJV6 / 3.0L NA V6 - AJ27 - Mass Air Flow (MAF) Sensor

Removal and Installation

## Removal

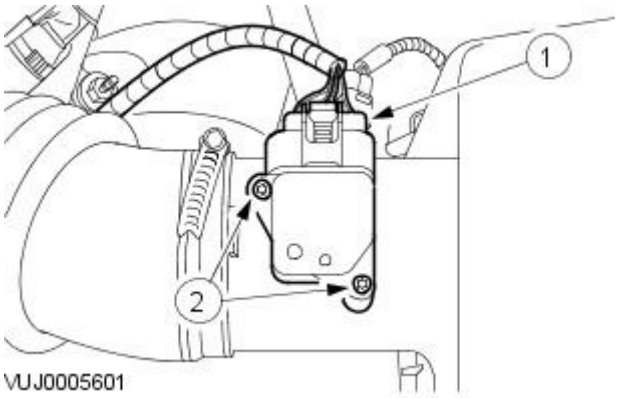


**1.** Remove the mass airflow (MAF) sensor.

1. Disconnect the MAF sensor electrical connector.
2. Remove the mass airflow MAF sensor.

- Remove and discard the MAF sensor O-ring seal.

## Installation

**1.** To install, reverse the removal procedure.

- Install a new MAF sensor O-ring seal.

**2.** NOTE: For NAS vehicles only.

If required, carry out a short drive cycle.
For additional information, refer to: Powertrain Control Module (PCM) Short Drive Cycle Self-Test (303-14A Electronic Engine Controls - 2.5L NA V6 - AJV6/3.0L NA V6 - AJ27, General Procedures).

GETtheMANUALS.org

# Electronic Engine Controls - 2.5L NA V6 - AJV6 / 3.0L NA V6 - AJ27 - Oil Temperature Sensor

Removal and Installation

## Removal

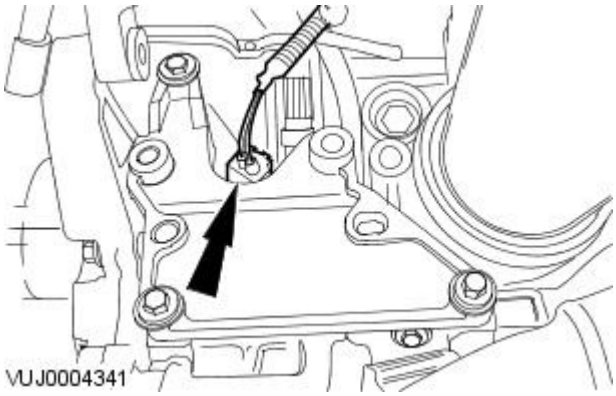


1. Remove the air conditioning A/C compressor.
   For additional information, refer to Section 412-03 Air Conditioning.
2. Disconnect the oil temperature sensor electrical connector.

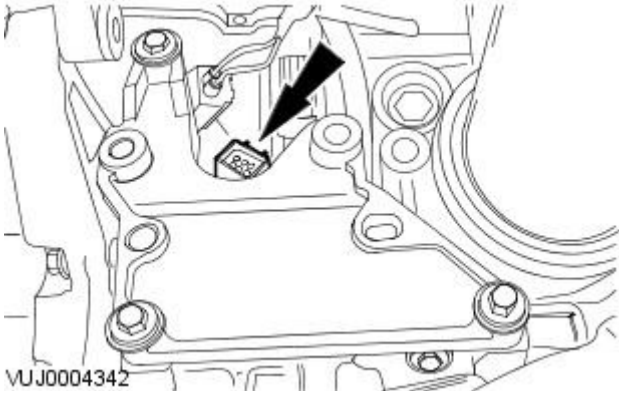


3. Remove the oil temperature sensor.

## Installation

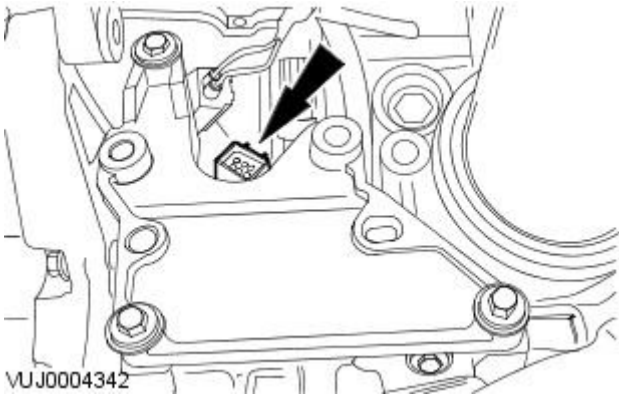


1. NOTE: If the oil temperature sensor is to be re-used apply a small bead of sealant meeting Jaguar specification on the first three threads of the oil temperature sensor.

   To install, reverse the removal procedure

   - Tighten to 15 Nm.

GETtheMANUALS.org

# Electronic Engine Controls - 2.5L NA V6 - AJV6 / 3.0L NA V6 - AJ27 - Variable Camshaft Timing (VCT) Oil Control Solenoid

Removal and Installation

## Removal

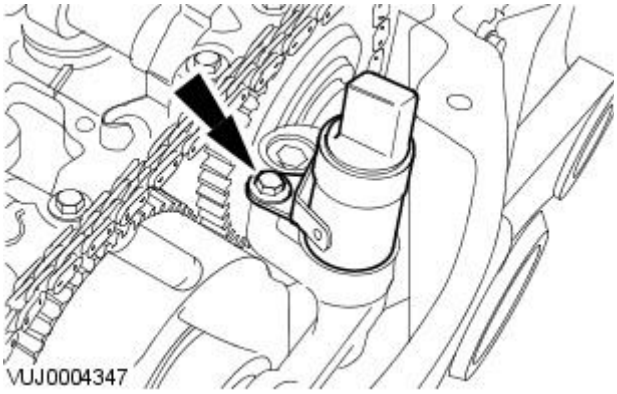


1. Remove the valve cover. For additional information, refer to: (303-01B Engine - V8 4.2L Petrol/V8 S/C 4.2L Petrol)

   Valve Cover RH - VIN Range: M45255->N52047 (In-vehicle Repair),
   Valve Cover RH - VIN Range: N52048->N99999 (In-vehicle Repair).

2. Remove the variable camshaft timing oil control solenoid.

## Installation

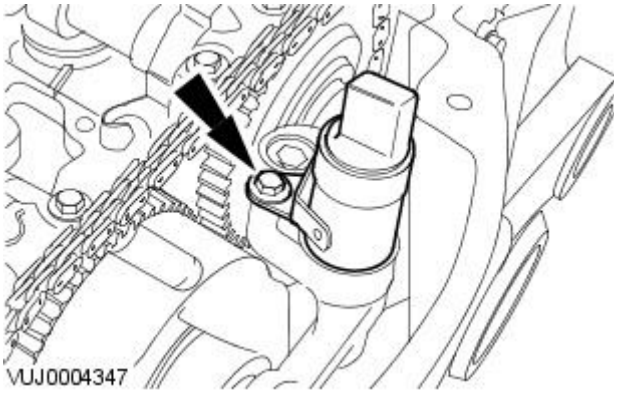


1. To install, reverse the removal procedure.

   - Tighten to 10 Nm.

2. NOTE: For NAS vehicles only.

   If required, carry out a short drive cycle.
   For additional information, refer to: Powertrain Control Module (PCM) Short Drive Cycle Self-Test (303-14A Electronic Engine Controls - 2.5L NA V6 - AJV6/3.0L NA V6 - AJ27, General Procedures).

GETtheMANUALS.org

# Electronic Engine Controls - V8 4.2L Petrol/V8 S/C 4.2L Petrol -

**Torque Specifications**

| Description | Nm | lb-ft | lb-in |
|---|---|---|---|
| Camshaft position (CMP) sensor retaining bolt | 7 | - | 62 |
| Heated oxygen sensor (H02S) | 40 | 30 | - |
| Catalyst monitor sensor | 40 | 30 | |
| Crankshaft position (CKP) sensor retaing bolt | 7 | - | 62 |
| Knock sensor retaining bolt | 25 | 18 | - |
| Fuel temperature sensor | 7 | - | 62 |
| Intake air temperature (IAT) sensor | 35 | 26 | - |
| Engine coolant temperature (ECT) sensor | 17 | 13 | - |
| Manifold absolute pressure (MAP) sensor | 10 | 7 | - |
| Oil temperature sensor | 15 | 11 | - |

**Lubricants, fluids, sealers and adhesives**

| Description | Specification |
|---|---|
| Sealant | WSK-M4G-328-A3 |

GETtheMANUALS.org

# Electronic Engine Controls - V8 4.2L Petrol/V8 S/C 4.2L Petrol - Electronic Engine Controls

Description and Operation

Vehicles with supercharger

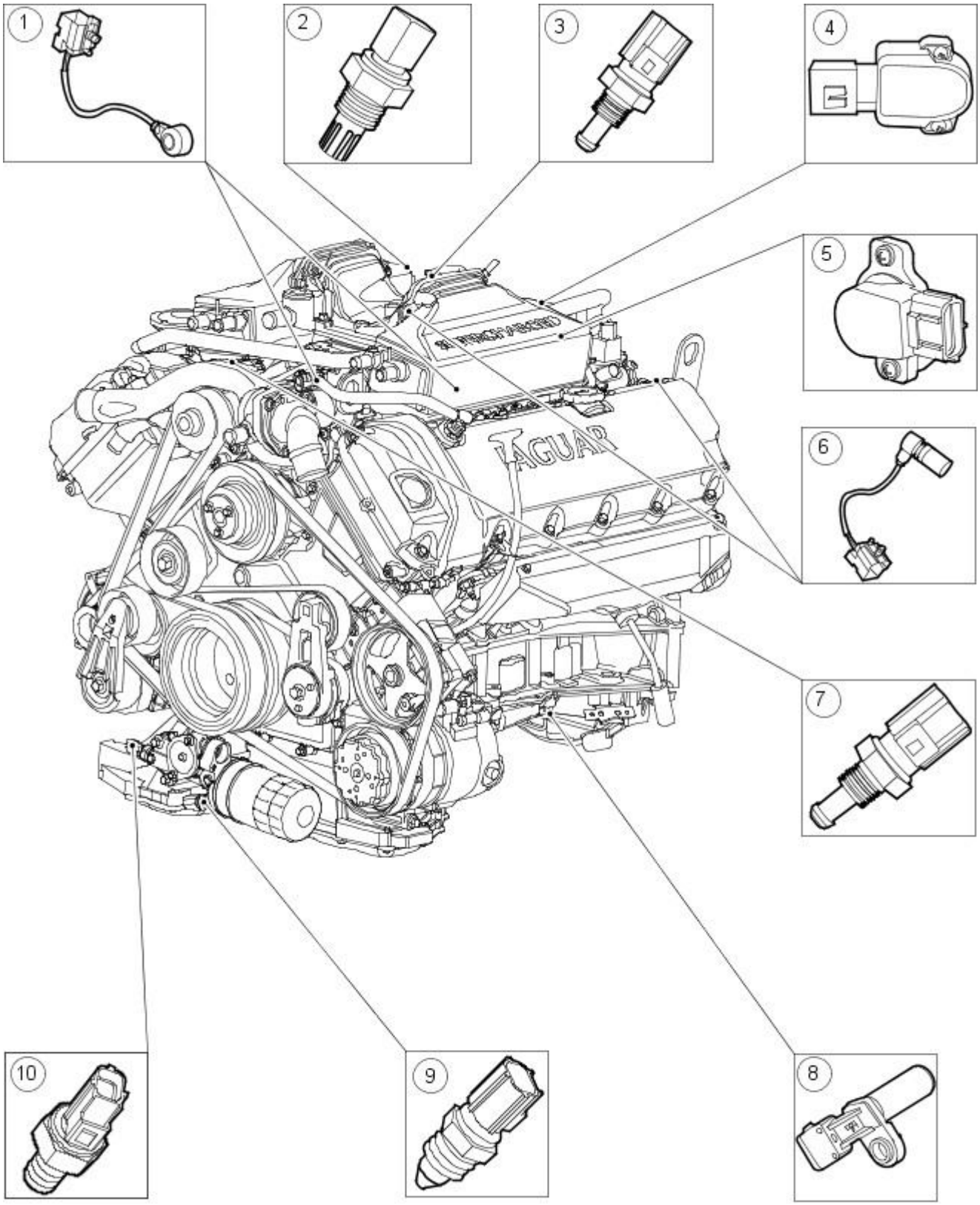


E30346

| Item | Part Number | Description |
|---|---|---|
| 1 | — | Knock sensor (KS) |
| 2 | — | Intake air temperature (IAT) sensor |
| 3 | — | Fuel temperature sensor |
| 4 | — | Throttle position sensor |
| 5 | — | Manifold absolute pressure (MAP) sensor |
| 6 | — | Camshaft position (CMP) sensor |
| 7 | — | Engine coolant temperature (ECT) sensor |
| 8 | — | Crankshaft position (CPK) sensor |
| 9 | — | Oil temperature sensor |
| 10 | — | Oil pressure sensor |

GETtheMANUALS.org

Vehicles without supercharger

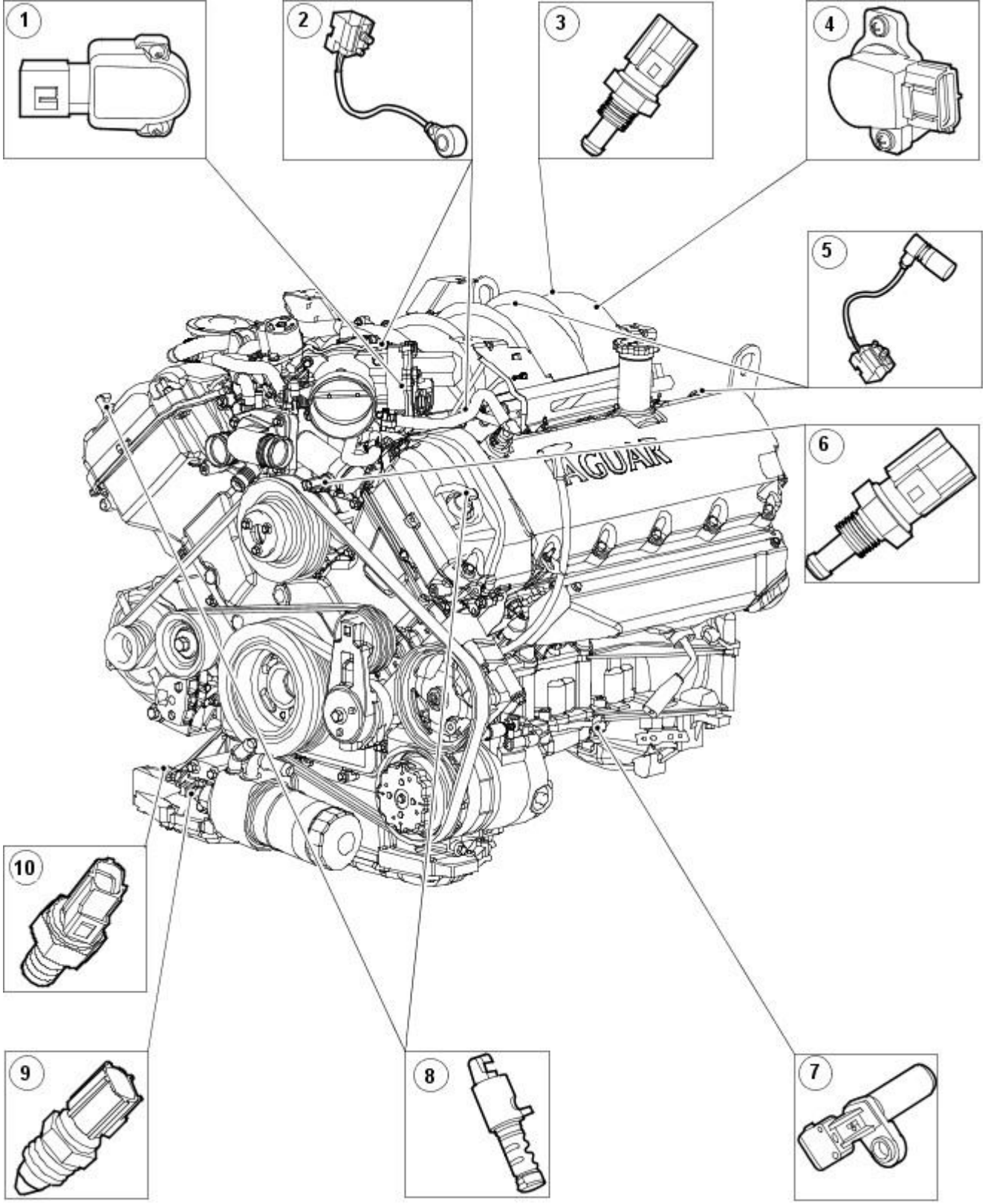


E30347

| Item | Part Number | Description |
|---|---|---|
| 1 | - | Throttle position sensor |
| 2 | - | Knock sensor (KS) |
| 3 | - | Fuel temperature sensor |
| 4 | - | Manifold absolute pressure (MAP) sensor |
| 5 | - | Camshaft position (CMP) sensor |
| 6 | - | Engine coolant temperature (ECT) sensor |
| 7 | - | Crankshaft position (CPK) sensor |
| 8 | - | Variable camshaft timing oil control solenoid |
| 9 | - | Oil temperature sensor |
| 10 | - | Oil pressure sensor |

GETtheMANUALS.org

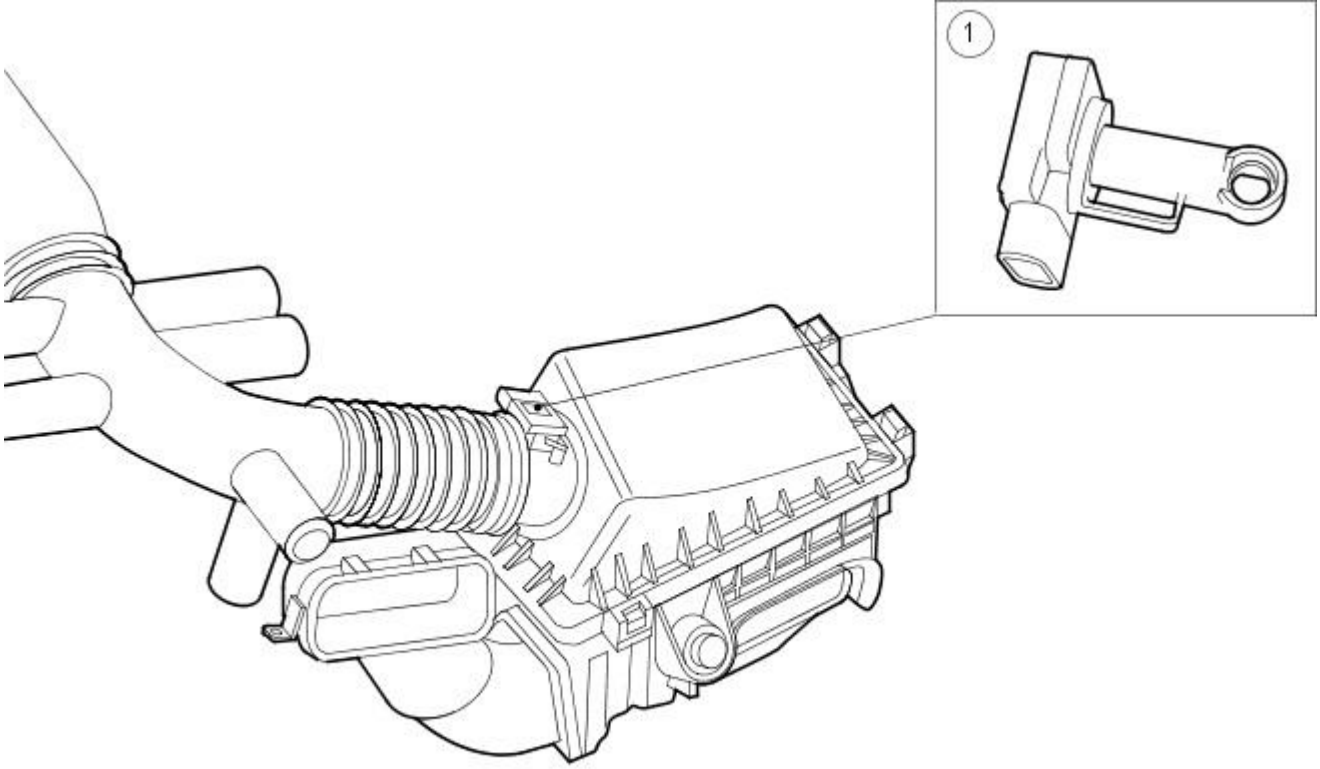


E30344

| Item | Part Number | Description |
|---|---|---|
| 1 | - | Mass air flow (MAF) sensor |

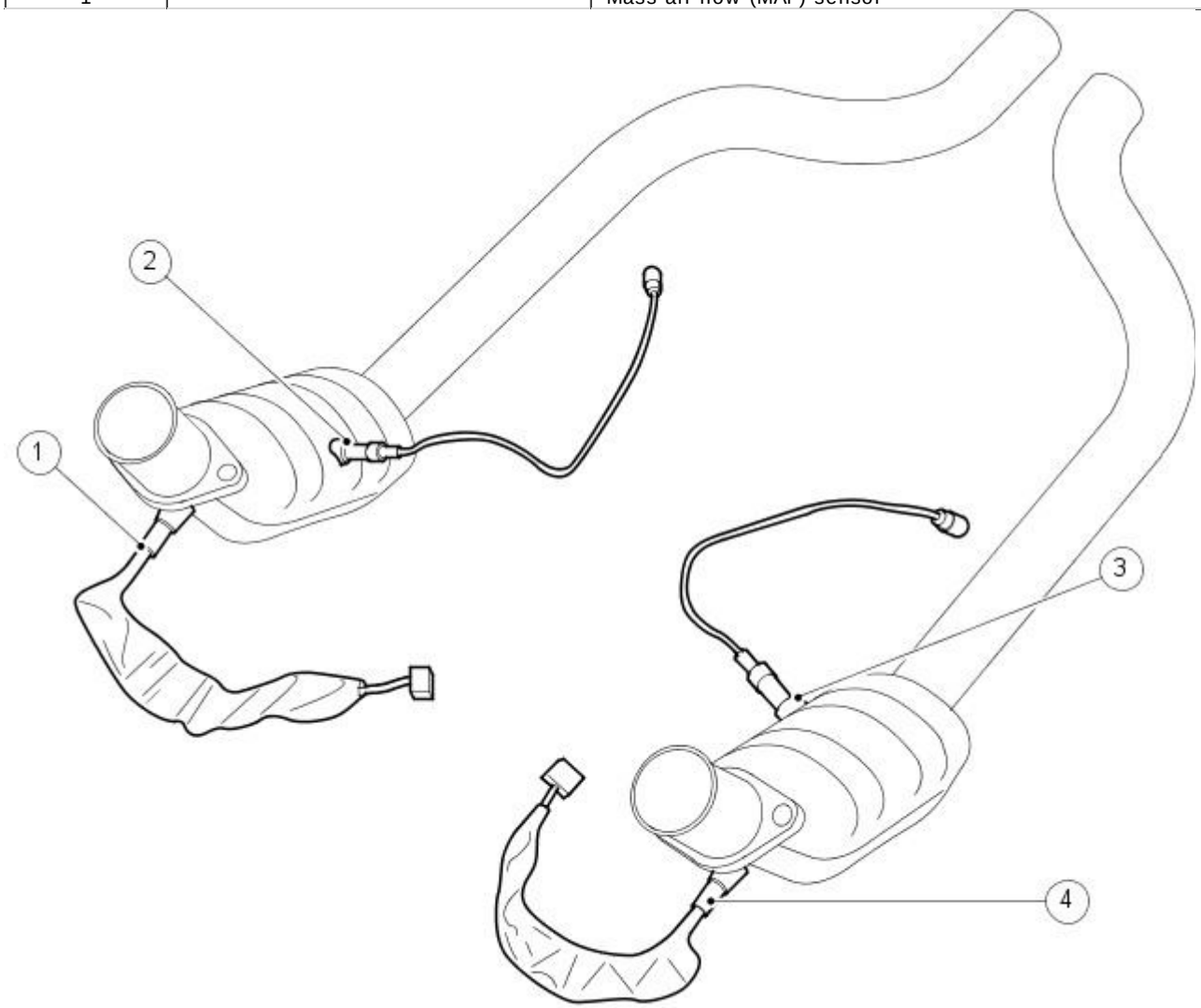


E30438

| Item | Part Number | Description |
|---|---|---|
| 1 | - | Heated oxygen sensor - RH |
| 2 | - | Catalyst monitor sensor - RH |
| 3 | - | Catalyst monitor sensor - LH |
| 4 | - | Heated oxygen sensor (HO2S) - LH |

LEFTHANDMANUALS.org

Engine Control Module (ECM)

The electronic engine control system consists of a engine control module (ECM), located behind the glove compartment, and a number of sensing and actuating devices. The sensors supply the ECM with input signals which relate to the engine operating conditions and driver requirements. The sensor information is evaluated by the ECM using the results to activate the appropriate response from the actuating devices. The system provides the necessary engine control accuracy and adaptability to:

- Minimize exhaust emissions and fuel consumption.
- Provide optimum driver control under all conditions.
- Minimize evaporative emissions.
- Provide system diagnostics.

In addition to these functions the ECM also interfaces with other vehicle systems through the controller area network (CAN).

Camshaft Position (CMP) Sensor

The camshaft position (CMP) sensors monitor the position of both camshafts to allow the ECM to control the phase of the inlet camshafts relative to the position of the crankshaft.

Variable Camshaft Timing Oil Control Solenoid

The variable camshaft timing oil control solenoid is a hydraulic actuator, which advances and retards the inlet camshaft timing, thereby altering the camshaft to crankshaft phasing for optimum engine performance.

Knock Sensors (KS)

The knock sensors (KS) detect combustion knock within the engine cylinders and sends a signal to the ECM. The ECM uses this information to gradually adjust the ignition timing until the combustion knock is eliminated.

Mass Air flow (MAF) Sensor

The mass air flow (MAF) sensor informs the ECM of the rate of air flow entering the engine by producing a voltage which is proportional to the rate of air flow into the engine. The voltage produced by the MAF sensor increases as the rate of air flow increases. The ECM takes into account the density of the air entering the air intake system so that it is possible to maintain the required air to fuel ratio, and to compensate for variations in atmospheric pressure.

Integral to the MAF sensor is the intake air temperature sensor (IAT) which measures the temperature of the air entering the air intake system. The ECM uses this information to compensate for higher than normal air intake temperatures.

Throttle Position (TP) Sensor

The ECM monitors the angle of the throttle blade within the throttle housing through the throttle position (TP) sensor. The TP sends a voltage to the ECM which is proportional to the angle of the throttle plate. The voltage from the TP increases with the angle of the throttle plate. There are two sensor tracks within the TP sensor.

Crankshaft Position (CKP) Sensor

The crankshaft position (CKP) sensor is an inductive pulse generator, which scans protrusions on a pulse ring fitted to the flywheel to inform the ECM of the crankshaft's position and speed. The CKP sensor produces an alternating voltage. The frequency of this voltage increases proportional to engine speed.

Engine Coolant Temperature (ECT) Sensor

The engine coolant temperature (ECT) sensor is a thermistor type sensor that provides an input signal to the ECM which is proportional to the engine coolant temperature. The ECT sensor is a negative temperature coefficient (NTC) sensor and its resistance decreases with a proportional increase in engine coolant temperature.

Oil Temperature Sensor

The oil temperature sensor is a thermistor type sensor that provides an input signal to the ECM which is proportional to the engine oil temperature.

Oil Pressure Switch

The oil pressure switch is connected to the instrument cluster and is not directly part of the electronic engine control system.

Heated Oxygen Sensor (HO2S)

The heated oxygen sensor (HO2S) is a linear characteristic type sensor, fitted forward of the exhaust system's catalytic converter. The ECM uses this as it's primary sensor to measure the oxygen content of the exhaust gasses within the exhaust system to provide closed-loop fuelling control.

Catalyst Monitor Sensor

The catalyst monitor sensor is a non-linear characteristic type sensor fitted to the exhaust system's catalytic converter. The ECM uses this as it's secondary sensor to measure the oxygen content of the exhaust gasses within the exhaust after they have passed through the catalytic converter. As well as providing additional closed-loop fuelling control the ECM uses this information to determine the efficiency of the catalytic converter.

Intake Air Temperature (IAT) Sensor. Vehicles with supercharger.

Vehicles with supercharger have an additional intake air temperature sensor located on the right-hand charge air cooler. The IAT measures the temperature of the air entering the charge air cooler. The ECM uses this information to compensate for higher than normal air intake temperatures.

GETtheMANUALS.org

# Electronic Engine Controls - V8 4.2L Petrol/V8 S/C 4.2L Petrol - Electronic Engine ControlsVIN Range: M45255->N52047

Diagnosis and Testing

1. **1.** Verify the customer concern by operating the system.
2. **2.** Visually inspect for obvious signs of mechanical and electrical damage.

**Visual Inspection Chart**

| Mechanical | Electrical |
|---|---|
| • Engine oil level<br>• Cooling system coolant level<br>• Fuel Contamination<br>• Throttle body | • Fuses. (9, 31, 32, 37)<br>• Wiring harness<br>• Electrical connector(s)<br>• Sensor(s)<br>• Engine control module (ECM) |

3. **3.** Verify the following systems are working correctly:

- Air intake system
- Cooling system
- Charging system
- Fuel charging system

4. **4.** If an obvious cause for an observed or reported concern is found, correct the cause (if possible) before proceeding to the next step.
5. **5.** If the concern is not visually evident and the approved Jaguar diagnostic system is not available, use a fault code reader to retrieve the fault codes before proceeding to the Diagnostic Trouble Code (DTC)s Index Chart.
6. **6.** Make sure that a power supply is present to the ECM from fuse 32 of the engine compartment fuse box before carrying out diagnostic work on the electronic engine control system.

**Diagnostic Trouble Code (DTC) Index**

| DTC | Description | Possible Source | Action |
|---|---|---|---|
| P0116, P0117, P0118, P0125 | Concern with engine coolant temperature (ECT) sensor | • ECT sensor.<br>• ECT sensor circuit(s)<br>• Low/contaminated coolant<br>• Thermostat failure<br>• Overheating | GO to Pinpoint Test A. |
| P0128, P1474 | Concern with engine temperature, set by ECT sensor inputs | • Thermostat<br>• ECT sensor<br>• ECT sensor circuit(s)<br>• Water pump malfunction | Mechanical check of thermostat. Mechanical check of water pump.GO to Pinpoint Test A. |
| P0335, P0336, P1245, P1246 | Concern with crankshaft position (CKP) sensor | • CKP sensor.<br>• CKP sensor circuit(s)<br>• CKP sensor air gap.<br>• CKP sensor debris. | GO to Pinpoint Test B. |
| P0340, P0341, | Concern with bank 1 camshaft position (CMP) sensor | • CMP sensor.<br>• CMP sensor circuit(s)<br>• CMP sensor air gap.<br>• CMP sensor debris. | GO to Pinpoint Test C. |
| DTC P0345, P0346, P1340, P1341 | Concern with bank 2 camshaft position (CMP) sensor | • CMP sensor.<br>• CMP sensor circuit(s)<br>• CMP sensor air gap.<br>• CMP sensor debris. | GO to Pinpoint Test D. |
| P0031, P0032 | Concern with bank 1 heated oxygen sensor (HO2S 1/1) heater | • H02S 1/1 failure.<br>• H02S 1/1 circuit(s)<br>• fuse 38. | GO to Pinpoint Test E. |
| P0181, P0182, P0183 | Concern with fuel temperature sensor | • Fuel temperature sensor.<br>• Fuel temperature sensor circuit(s) | GO to Pinpoint Test F. |
| P0327, P0328, P1648 | Concern with knock sensor (KS) right-hand | • KS<br>• KS circuit(s)<br>• Poor contact with cylinder block.<br>• ECM failure. | GO to Pinpoint Test G. |
| P0332, P0333,P1648 | Concern with knock sensor (KS) left-hand | • KS<br>• KS circuit(s)<br>• Poor contact with cylinder block.<br>• ECM failure. | GO to Pinpoint Test H. |
| P0197, P0198, P0196 | Concern with oil temperature sensor | • Oil temperature sensor.<br>• Oil temperature sensor circuit(s) | GO to Pinpoint Test I. |
| P0131, P0132 | Concern with bank 1 heated oxygen sensor (HO2S 1/1) | • HO2S 1/1<br>• HO2S 1/1 circuit(s) | GO to Pinpoint Test J. |

GETtheMANUALS.org

| DTC | Description | Possible Source | Action |
|---|---|---|---|
| P0133 | Concern with bank 1 heated oxygen sensor (HO2S 1/1). Slow response | • Engine misfire.<br>• H02S 1/1 disconnected.<br>• H02S 1/1 mechanical damage.<br>• H02S 1/1 to ECM wiring fault.<br>• H02S 1/1 short circuit to ground.<br>• H02S 1/1 wiring shield open circuit.<br>• H02S 1/1 heater circuit fault.<br>• Exhaust leak.<br>• Low exhaust temperature.<br>• Injector flow partially blocked.<br>• Catalyst efficiency decrease.<br>• H02S 1/1 failure. | GO to Pinpoint Test J. |
| P1646 | Concern with bank 1 heated oxygen sensor (HO2S 1/1) | • H02S 1/1 heater failure.<br>• H02S 1/1 sensing circuit, short circuit to ground.<br>• H02S 1/1 sensing circuit, short circuit to high voltage.<br>• H02S 1/1 sensing circuit, open circuit.<br>• H02S 1/1 high resistance in wiring harness.<br>• ECM failure. | GO to Pinpoint Test J. |
| P0037, P0038, P0137, P0138 | Concern with bank 1 catalyst monitor sensor. (H02S 1/2) | • H02S 1/2<br>• H02S 1/2 circuit(s)<br>• Fuse 38. | GO to Pinpoint Test K. |
| P0140 | Concern with bank 1 catalyst monitor sensor. (H02S 1/2) | • Exhaust leak.<br>• Low exhaust temperature.<br>• Rich running mixture. | Inspect exhaust system<br>REFER to: Exhaust System - VIN Range: M45255->N13088 (309-00 Exhaust System, Diagnosis and Testing). |
| P0151, P0152 | Concern with bank 2 heated oxygen sensor (HO2S 2/1) | • HO2S 2/1<br>• HO2S 2/1 circuit(s) | GO to Pinpoint Test L. |
| P0153 | Concern with bank 2 heated oxygen sensor (HO2S 2/1) Slow response | • Engine misfire.<br>• H02S 2/1 disconnected.<br>• H02S 2/1 mechanical damage.<br>• H02S 2/1 to ECM wiring fault.<br>• H02S 2/1 short circuit to ground.<br>• H02S 2/1 wiring shield open circuit.<br>• H02S 2/1 heater circuit fault.<br>• Exhaust leak.<br>• Low exhaust temperature.<br>• Injector flow partially blocked.<br>• Catalyst efficiency decrease.<br>• H02S 2/1 failure. | GO to Pinpoint Test L. Refer to pinpoint tests for components listed<br>REFER to: Exhaust System - VIN Range: M45255->N13088 (309-00 Exhaust System, Diagnosis and Testing) /<br>Fuel Charging and Controls - VIN Range: M45255->N52047 (303-04B Fuel Charging and Controls - V8 4.2L Petrol/V8 S/C 4.2L Petrol, Diagnosis and Testing). |
| P1647 | Concern with bank 2 heated oxygen sensor (HO2S 2/1) | • H02S 2/1 heater failure.<br>• H02S 2/1 sensing circuit, short circuit to ground.<br>• H02S 2/1 sensing circuit, short circuit to high voltage.<br>• H02S 2/1 sensing circuit, open circuit.<br>• H02S 2/1 high resistance in wiring harness.<br>• ECM failure. | GO to Pinpoint Test L. |
| P0057, P0058, P0157, P0158, | Concern with bank 2 catalyst monitor sensor (HO2S 2/2) | • HO2S 2/2<br>• HO2S 2/2 sensor circuit(s)<br>• Fuse 42. | GO to Pinpoint Test M. |
| P0160 | Concern with bank 2 catalyst monitor sensor (HO2S 2/2) | • Exhaust leak.<br>• Low exhaust temperature.<br>• Rich running mixture. | Inspect exhaust system<br>REFER to: Exhaust System - VIN Range: M45255->N13088 (309-00 Exhaust System, Diagnosis and Testing). |

GETtheMANUALS.org

| DTC | Description | Possible Source | Action |
|---|---|---|---|
| P0420 | Right-hand catalytic converter efficiency below threshold. Note: Do not replace sensors for this DTC. | • Catalytic converter failure (melted, fractured)<br>• Catalytic converter contaminated (sulphur) | Monitoring conditions<br>• Start engine and bring to normal operating temperature<br>• Allow to idle for 2 minutes<br>• Rev engine to between 2500 and 2700 rpm for 5 minutes<br>• Drive vehicle for at least 1 minute (general conditions)<br>• Check for DTCs<br>• Stop the engine<br>Examine the catalytic converters for damage/contamination. Follow the DTC index for any other codes indicated. |
| P0430 | Concern with LH Catalytic converter system. (efficiency below threshold) | • Catalytic converter failure (melted, fractured)<br>• Catalytic converter contaminated (sulphur) | Monitoring conditions<br>• Start engine and bring to normal operating temperature<br>• Allow to idle for 2 minutes<br>• Rev engine to between 2500 and 2700 rpm for 5 minutes<br>• Drive vehicle for at least 1 minute (general conditions)<br>• Check for DTCs<br>• Stop the engine<br>Examine the catalytic converters for damage/contamination. Follow the DTC index for any other codes indicated. |
| P0101, P0102 | Concern with mass air flow (MAF) sensor | • MAF sensor.<br>• MAF sensor circuit(s)<br>• Blocked air filter.<br>• Air intake leak.<br>• Engine breather leak.<br>• Throttle control malfunction. | Visually inspect components listed. GO to Pinpoint Test N. |
| P0103, P1104 | Concern with mass air flow (MAF) sensor | • MAF sensor.<br>• MAF sensor circuit(s). | GO to Pinpoint Test N. |
| P0111 | Concern with the intake air temperature (IAT) sensor | • MAF sensor.<br>• MAF sensor circuit(s)<br>• Blocked air filter.<br>• Air intake leak.<br>• Engine breather leak. | GO to Pinpoint Test O. |
| P0112, P0113 | Concern with the intake air temperature (IAT) sensor | • Intake air temperature (IAT) sensor.<br>• Intake air temperature (IAT) sensor circuit. | GO to Pinpoint Test O. |
| P0051, P0052 | Concern with the bank 2 heated oxygen sensor (HO2S 2/1) heater | • HO2S 2/1<br>• HO2S 2/1 circuit<br>• Fuse 42 | GO to Pinpoint Test P. |
| P1606 | Concern with ECM relay | • ECM.<br>• ECM relay.<br>• ECM relay circuit(s)<br>• Fuse 31. | GO to Pinpoint Test Q. |
| P0105, , P1107, P1108 | Concern with MAP sensor | • MAP sensor<br>• MAP sensor circuits. | GO to Pinpoint Test R. |
| P0106, P0107, P0108 | Concern with Barometric (HAC) sensor | Barometric sensor within the ECM | ECM internal fault. Please make sure part is not on any form of prior authorisation before replacing. |
| P0010, P1384 | Concern with VVT circuit, Bank 1 | • VVT solenoid and circuit<br>• Oil flow<br>• Camshaft failure. | GO to Pinpoint Test S. REFER to: Engine (303-01B Engine - V8 4.2L Petrol/V8 S/C 4.2L Petrol, Diagnosis and Testing). |
| P0020, P1396 | Concern with VVT circuit, Bank 2 | • VVT solenoid and circuit<br>• Oil flow<br>• Camshaft failure. | GO to Pinpoint Test T. REFER to: Engine (303-01B Engine - V8 4.2L Petrol/V8 S/C 4.2L Petrol, Diagnosis and Testing). |
| P0532 | Concern with air conditioning refrigerant pressure sensor (low input) | • Air conditioning refrigerant pressure sensor.<br>• Air conditioning refrigerant pressure sensor input circuit short circuit to ground or open circuit. | GO to Pinpoint Test U. |
| P0533 | Concern with air conditioning refrigerant pressure sensor (high input) | • Air conditioning refrigerant pressure sensor.<br>• Air conditioning refrigerant pressure sensor input circuit short circuit to battery. | GO to Pinpoint Test V. |

GETtheMANUALS.org

| DTC | Description | Possible Source | Action |
|---|---|---|---|
| P1582 | "Flight Recorder" Data Stored | This code does not indicate a failure of a component or system. | GO to Pinpoint Test W. |
| P1240, P1241, P1242 | Concern with Sensor Power Supply | • ECM<br>• Power Supply circuits.<br>• Sensors within the circuit. | GO to Pinpoint Test X. |
| P1243 | Concern with Sensor Ground circuit | • ECM<br>• Sensor Ground circuits.<br>• Sensors within the circuit. | GO to Pinpoint Test Y. |
| P0480 | Concern with Radiator Cooling Fan Module Drive | • Cooling Fan Module<br>• Cooling Fan Module circuits. | GO to Pinpoint Test Z. |
| P0646, P0647 | Concern with Air Conditioning Clutch Relay Drive | • Air Conditioning Clutch Relay<br>• Air Conditioning Clutch Relay circuits. | GO to Pinpoint Test AA. |
| P1516, P1517 | Concern with P/N Switch starting/driving malfunctions | • CJFB.<br>• Ignition relay.<br>• TR sensor.<br>• Inertia switch and circuits. | GO to Pinpoint Test AB. |
| P1245, P1246 | Concern with engine crank signal, high/low voltage | • Starter relay.<br>• ECM.<br>• Ignition switch.<br>• Associated circuits. | GO to Pinpoint Test AC. |
| P0096, P0097, P0098 | Concern with supercharger intake air temperature sensor | • Supercharger intake air temperature sensor<br>• Supercharger intake air temperature sensor circuits. | GO to Pinpoint Test AD. |
| P1410 | Concern with supercharger air cleaner additional air inlet actuator | • Supercharger air cleaner additional air inlet actuator.<br>• Supercharger air cleaner additional air inlet actuator circuits. | GO to Pinpoint Test AE. |
| P1260 | Security input malfunction | • GEM.<br>• Ignition key.<br>• PATS circuits.<br>• CAN network. | Reprogramme key, check CAN network<br>REFER to: Communications Network - VIN Range: N52048->N99999 (418-00 Module Communications Network, Diagnosis and Testing). |
| P1122, P1123, P1215, P1216, P1344, P0121, P0122, P0123,P1251, P1658, P1631, P1657,P1250, P1254, | Accelerator and throttle. | • Throttle position sensor circuit out of range<br>• Accelerator pedal demand sensor output circuit out of range<br>• Throttle motor relay failure<br>• Accelerator pedal demand sensor ground; open circuit<br>• Throttle limp home spring malfunction. | REFER to: Acceleration Control (310-02 Acceleration Control, Diagnosis and Testing). |
| P0506 | Idle RPM lower than expected | • Air intake restriction.<br>• Accessory drive overload. (defective/seized component)<br>• Throttle valve stuck closed.<br>• Throttle body failure. | REFER to: Intake Air Distribution and Filtering - VIN Range: M45255->N13088 (303-12B Intake Air Distribution and Filtering - V8 4.2L Petrol/V8 S/C 4.2L Petrol, Diagnosis and Testing) / Accessory Drive (303-05 Accessory Drive, Diagnosis and Testing) / Fuel Charging and Controls - VIN Range: M45255->N52047 (303-04B Fuel Charging and Controls - V8 4.2L Petrol/V8 S/C 4.2L Petrol, Diagnosis and Testing). |
| P0507 | Idle RPM higher than expected | • Speed control switches internal steering wheel circuit; Short circuit to ground.<br>• Steering wheel cassette reel; Short circuit to ground.<br>• Cassette reel to ECM circuit; Short circuit to ground.<br>• RESUME switch failure. (stuck ON) | REFER to: Speed Control - VIN Range: M45255->N13088 (310-03 Speed Control, Diagnosis and Testing). |

GETtheMANUALS.org

| DTC | Description | Possible Source | Action |
|---|---|---|---|
| P0603, P1611, P1633, P1634, P1656 | Concern with engine control module (ECM) | ECM. | ECM internal fault. Please make sure part is not on any form of prior authorisation before replacing. |
| P0171, P0172, P0174, P0175, P0201, P0202, P0203, P0204, P0205, P0206, P0207, P0208 | Concern with fuel system too lean/rich | • Fuel injector(s)<br>• Fuel delivery fault. | REFER to: Fuel Charging and Controls - VIN Range: M45255->N52047 (303-04B Fuel Charging and Controls - V8 4.2L Petrol/V8 S/C 4.2L Petrol, Diagnosis and Testing). |
| P0300, P0301, P0302, P0303, P0304, P0305, P0306, P0307, P0308, P1313, P1314, P1316 | Concern with ignition system/misfire monitoring | • Ignition system.<br>• Ignition system wiring harness. | REFER to: Engine Ignition - VIN Range: M45255->N52047 (303-07B Engine Ignition - V8 4.2L Petrol/V8 S/C 4.2L Petrol, Diagnosis and Testing). |
| P0351, P0352, P0353, P0354, P0355, P0356, P0357, P0358 | Concern with ignition primary circuits | • Ignition on-plug coils.<br>• Ignition on-plug circuits. | REFER to: Engine Ignition - VIN Range: M45255->N52047 (303-07B Engine Ignition - V8 4.2L Petrol/V8 S/C 4.2L Petrol, Diagnosis and Testing). |
| P0441, P0442, P0443, P0444, P0445, P0446, P0447, P0448, P0450, P0452, P0453, P0455P0456 | Concern with Evaporative emissions system | • EVAP/purge valve and circuits.<br>• Fuel tank and lines.<br>• Filler cap.<br>• Carbon canister.<br>• Canister close valve and circuits<br>• Fuel tank pressure sensor.<br>• Fuel tank vapor port.<br>• Vapor lines. | REFER to: Evaporative Emissions - VIN Range: M45255->N52047 (303-13 Evaporative Emissions, Diagnosis and Testing). |
| P0460 | Concern with fuel level sensors | • Fuel level sensors<br>• Fuel level sensor circuits<br>• Instrument cluster. | REFER to: Fuel Charging and Controls - VIN Range: M45255->N52047 (303-04B Fuel Charging and Controls - V8 4.2L Petrol/V8 S/C 4.2L Petrol, Diagnosis and Testing). |
| P0560 | ECM battery power supply voltage malfunction. (This DTC could be set due to a fuel injection pressure sensor fault. If P0193 is also set, rectify P0193 first) | ECM battery power supply circuit open circuit or high resistance. | Repair the circuit. For additional information, refer to wiring diagrams. CLEAR the DTC. TEST the system for normal operation. |
| P0565, P0566, P0567, P0568, P0569, P0570, P1571 | Concern with vehicle speed control steering wheel switches and pedal switches. | • Switchpack.<br>• Switchpack circuits.<br>• Clutch cancel switch.<br>• Clutch safety switch.<br>• Brake on/off switch. | REFER to: Speed Control - VIN Range: M45255->N13088 (310-03 Speed Control, Diagnosis and Testing). |
| P0616, P0617 | Concern with the starter relay circuit | • Starter relay.<br>• Starter relay drive circuit. | REFER to: Starting System (303-06 Starting System, Diagnosis and Testing). |
| P1224, P1229. | Concern with throttle body | • Throttle motor.<br>• Throttle motor relay.<br>• Throttle motor relay circuits.<br>• Throttle body.<br>• Throttle position sensor.<br>• Throttle position sensor circuits.<br>• Throttle return spring.<br>• Limp-home spring. | REFER to: Fuel Charging and Controls - VIN Range: M45255->N52047 (303-04B Fuel Charging and Controls - V8 4.2L Petrol/V8 S/C 4.2L Petrol, Diagnosis and Testing). |
| P1234, P1236, P1338 | Concern with fuel pump commands | • Fuel pump control module.<br>• Fuel pump control module circuits.<br>• ECM. | REFER to: Fuel Charging and Controls - VIN Range: M45255->N52047 (303-04B Fuel Charging and Controls - V8 4.2L Petrol/V8 S/C 4.2L Petrol, Diagnosis and Testing). |
| P1233, P1339 | Concern with fuel pump feed back | • Fuel pump control module.<br>• Fuel pump control module circuits.<br>• ECM. | REFER to: Fuel Charging and Controls - VIN Range: M45255->N52047 (303-04B Fuel Charging and Controls - V8 4.2L Petrol/V8 S/C 4.2L Petrol, Diagnosis and Testing). |
| P1244, P1629, P1632, P1146 | Concern with charging system | • Charging system.<br>• Charging system wiring harness. | REFER to: Charging System - V8 4.2L Petrol/V8 S/C 4.2L Petrol/2.5L NA V6 - AJV6/3.0L NA V6 - AJ27 (414-00 Battery and Charging System - General Information, Diagnosis and Testing). |
| P0191, P0192, P0193 | Concern with fuel pressure sensor | • Fuel pressure sensor circuit(s).<br>• Fuel pressure sensor.<br>• Fuel system leak/blockage. | REFER to: Fuel Charging and Controls - VIN Range: M45255->N52047 (303-04B Fuel Charging and Controls - V8 4.2L Petrol/V8 S/C 4.2L Petrol, Diagnosis and Testing). |
| P0222, P0223 | Concern with throttle position (TP) sensor | • TP sensor.<br>• TP sensor circuit(s). | REFER to: Acceleration Control (310-02 Acceleration Control, Diagnosis and Testing). |
| P1000 | System check not complete since last memory clear | OBD errors not cleared by diagnosis. | Carry out comprehensive component monitor drive cycle. Refer to the DTC section of JTIS, accessed by the icon on the opening page. |

GETtheMANUALS.org

| DTC | Description | Possible Source | Action |
|---|---|---|---|
| P1111 | System check complete since last memory clear | This code does not indicate a failure of a component or system. | No action necessary. |
| P1367 | Concern with bank 1 ignition amplifier | • Ignition module.<br>• Ignition module circuits. | REFER to: Engine Ignition - VIN Range: M45255->N52047 (303-07B Engine Ignition - V8 4.2L Petrol/V8 S/C 4.2L Petrol, Diagnosis and Testing). |
| P1368 | Concern with bank 2 ignition amplifier | • Ignition module.<br>• Ignition module circuits. | REFER to: Engine Ignition - VIN Range: M45255->N52047 (303-07B Engine Ignition - V8 4.2L Petrol/V8 S/C 4.2L Petrol, Diagnosis and Testing). |
| P0400 | Concern with EGR flow | • Exhaust manifold to EGR valve pipe tube blocked.<br>• Exhaust manifold to EGR valve pipe tube cracked.<br>• EGR valve stuck closed.<br>• EGR valve stuck open.<br>• EGR valve loose.<br>• Fuse 37 in the front power distribution box (FPDB).<br>• Relay 5 in the FPDB<br>• Electrical harness.<br>• Electrical connector(s) | REFER to: Engine Emission Control (303-08B Engine Emission Control - 2.7L V6 - TdV6, Diagnosis and Testing). |
| P1656 | Concern with TP sensor amplifier circui | ECM. | ECM internal fault. Please make sure part is not on any form of prior authorisation before replacing. |
| P1609 | CPU to CPU communications | ECM. | ECM internal fault. Please make sure part is not on any form of prior authorisation before replacing. |
| P1637, P1638. P1642, P1643, P1699 | Concern with CAN network | CAN network modules and circuits. | REFER to: Communications Network - VIN Range: N52048->N99999 (418-00 Module Communications Network, Diagnosis and Testing). |

| PINPOINT TEST A : DTC P0116, P0117, P0118, P0125. ECT SENSOR. | |
|---|---|
| **TEST CONDITIONS** | **DETAILS/RESULTS/ACTIONS** |
| **A1: CHECK THE ECT SENSOR RESISTANCE** | |
| | 1 Measure the resistance between pins 1 and 2 of the Engine Coolant Temperature sensor. |
| | Is the resistance 2437 to 2464 ohms at 20°C?<br>**Yes**<br>GO to A2.<br>**No**<br>INSTALL a new ECT sensor. CLEAR the DTCs. TEST the system for normal operation. |
| **A2: CHECK THE ENGINE COOLANT TEMPERATURE (ECT) SENSOR SIGNAL WIRE FOR OPEN CIRCUIT** | |
| | 1 Turn the ignition switch to the OFF position. |
| | 2 Disconnect the ECT sensor electrical connector PI25. |
| | 3 Disconnect the ECM electrical connector, PI01. |
| | 4 Measure the resistance between the ECT sensor electrical connector PI25, pin 2 (UY) and the ECM electrical connector PI01, pin 70 (UY). |
| | Is the resistance less than 5 ohms?<br>**Yes**<br>GO to A3.<br>**No**<br>REPAIR the circuit. For additional information, refer to the wiring diagrams. CLEAR the DTCs. TEST the system for normal operation. |
| **A3: CHECK THE ECT SENSOR SIGNAL WIRE FOR A SHORT TO GROUND** | |
| | 1 Measure the resistance between the ECT sensor electrical connector PI25, pin 2 (UY) and PI01, pin 19. |
| | Is the resistance less than 10,000 ohms?<br>**Yes**<br>REPAIR the short to GROUND. For additional information, refer to the wiring diagrams. CLEAR the DTCs. TEST the system for normal operation.<br>**No**<br>GO to A4. |
| **A4: CHECK THE ECT SENSOR GROUND CIRCUIT** | |
| | 1 Measure the resistance between the ECT sensor electrical connector PI25, pin 1 (BG) and GROUND. |
| | Is the resistance less than 5 ohms?<br>**Yes**<br>GO to A5.<br>**No**<br>REPAIR the circuit. For additional information, refer to the wiring diagrams. CLEAR the DTCs. TEST the system for normal operation. |
| **A5: CHECK THE ECT SENSOR GROUND CIRCUIT FOR A SHORT TO BATTERY POSITIVE** | |
| | 1 Turn the ignition switch to the ON position. |
| | 2 Measure the voltage between the ECT electrical connector PI25, pin 1 (BG) and GROUND. |
| | Is a voltage present?<br>**Yes**<br>REPAIR the circuit. For additional information, refer to the wiring diagrams. CLEAR the DTCs. TEST the system for normal operation.<br>**No**<br>GO to A6. |
| **A6: CHECK THE ECT SENSOR CIRCUIT FOR A SHORT TO BATTERY POSITIVE** | |
| | 1 Connect the ECM electrical connector PI01. |
| | 2 Turn the ignition switch to the ON position. |
| | 3 Measure the voltage between the ECT sensor electrical connector PI25, pin 2 (UY) and GROUND. |
| | Is the voltage greater than 5 volts?<br>**Yes**<br>REPAIR the short to battery positive. For additional information, refer to the wiring diagrams. CLEAR the DTCs. TEST the system for normal operation.<br>**No** |

GETtheMANUALS.org

| | |
|---|---|
| | INSTALL a new ECT sensor. CLEAR the DTCs. TEST the system for normal operation. If the DTC is repeated, INSTALL a new ECM.<br>REFER to: Engine Control Module (ECM) (303-14A Electronic Engine Controls - 2.5L NA V6 - AJV6/3.0L NA V6 - AJ27, Removal and Installation).<br>Before replacing an ECM, contact dealer technical support. |

| PINPOINT TEST B : DTC P0335, P0336, P1245, P1246. CRANKSHAFT POSITION (CKP) SENSOR. | |
|---|---|
| **TEST CONDITIONS** | **DETAILS/RESULTS/ACTIONS** |
| **B1: CHECK THE CKP SENSOR FOR CORRECT INSTALLATION** | |
| | 1 Turn the ignition switch to the OFF position. |
| | 2 Check the CKP sensor for correct installation. |
| | Is the CKP sensor correctly installed?<br>**Yes**<br>GO to B2.<br>**No**<br>INSTALL the CKP sensor correctly.<br>REFER to: Crankshaft Position (CKP) Sensor (303-14B Electronic Engine Controls - V8 4.2L Petrol/V8 S/C 4.2L Petrol, Removal and Installation).<br>Reconnect the sensor. CLEAR the DTCs. TEST the system for normal operation. |
| **B2: CHECK THE CKP SENSOR FOR DEBRIS** | |
| | 1 Remove the CKP sensor and inspect for debris. |
| | Is the CKP sensor and flywheel teeth free of debris?<br>**Yes**<br>GO to B3.<br>**No**<br>CLEAN the sensor and wheel. INSTALL the sensor<br>REFER to: Crankshaft Position (CKP) Sensor (303-14B Electronic Engine Controls - V8 4.2L Petrol/V8 S/C 4.2L Petrol, Removal and Installation).<br>Reconnect the sensor. CLEAR the DTCs. TEST the system for normal operation. |
| **B3: CHECK THE CKP SENSOR RESISTANCE** | |
| | 1 Measure the resistance between pins 1 and 2 of the CKP sensor. |
| | Is the resistance 250 to 450 ohms?<br>**Yes**<br>GO to B4.<br>**No**<br>INSTALL a new CKP sensor<br>REFER to: Crankshaft Position (CKP) Sensor (303-14B Electronic Engine Controls - V8 4.2L Petrol/V8 S/C 4.2L Petrol, Removal and Installation).<br>Reconnect the sensor. CLEAR the DTCs. TEST the system for normal operation. |
| **B4: CHECK THE CKP SENSOR GROUND WIRE FOR OPEN CIRCUIT** | |
| | 1 Disconnect the ECM electrical connector PI01. |
| | 2 Disconnect the CKP sensor electrical connector PI21. |
| | 3 Measure the resistance between the CKP sensor electrical connector PI21, pin 1 (B) and the ECM electrical connector PI01, pin 37 (B). |
| | Is the resistance less than 5 ohms?<br>**Yes**<br>GO to B5.<br>**No**<br>REPAIR the circuit. For additional information, refer to the wiring diagrams. Reconnect all connectors. CLEAR the DTCs. TEST the system for normal operation. |
| **B5: CHECK THE CKP SENSOR SIGNAL WIRE FOR OPEN CIRCUIT** | |
| | 1 Measure the resistance between the CKP sensor electrical connector PI21, pin 2 (O) and the ECM electrical connector PI01, pin 36 (O). |
| | Is the resistance less than 5 ohms?<br>**Yes**<br>GO to B6.<br>**No**<br>REPAIR the circuit. For additional information, refer to the wiring diagrams. Reconnect all connectors. CLEAR the DTCs. TEST the system for normal operation. |
| **B6: CHECK THE CKP SENSOR GROUND WIRE FOR A SHORT TO GROUND** | |
| | 1 Measure the resistance between the CKP sensor electrical connector PI21 pin 1 (B) and GROUND. |
| | Is the resistance less than 10,000 ohms?<br>**Yes**<br>REPAIR the short to GROUND. For additional information, refer to the wiring diagrams. Reconnect all connectors. CLEAR the DTCs. TEST the system for normal operation.<br>**No**<br>GO to B7. |
| **B7: CHECK THE CKP SENSOR SIGNAL WIRE FOR A SHORT TO GROUND** | |
| | 1 Measure the resistance between the CKP sensor electrical connector PI21 pin 2 (O) and GROUND. |
| | Is the resistance less than 10,000 ohms?<br>**Yes**<br>REPAIR the short to GROUND. For additional information, refer to the wiring diagrams. Reconnect all connectors. CLEAR the DTCs. TEST the system for normal operation.<br>**No**<br>GO to B8. |
| **B8: CHECK THE CKP SENSOR GROUND WIRE FOR A SHORT TO BATTERY POSITIVE** | |
| | 1 Turn the ignition switch to the ON position. |
| | 2 Measure the voltage between the CKP sensor electrical connector PI21 pin 1 (B) and GROUND. |
| | Is the voltage greater than 5 volts?<br>**Yes**<br>REPAIR the short to battery positive. For additional information, refer to the wiring diagrams. Reconnect all connectors. CLEAR the DTCs. TEST the system for normal operation.<br>**No**<br>GO to B9. |
| **B9: CHECK THE CKP SENSOR SIGNAL WIRE FOR A SHORT TO BATTERY POSITIVE** | |
| | 1 Turn the ignition switch to the ON position. |
| | 2 Measure the voltage between the CKP sensor electrical connector PI21 pin 2 (O) and GROUND. |

GET the MANUALS.org

| | |
|---|---|
| | Is the voltage greater than 5 volts?<br>**Yes**<br>REPAIR the short to battery positive. For additional information, refer to the wiring diagrams. Reconnect all connectors. CLEAR the DTCs. TEST the system for normal operation.<br>**No**<br>INSTALL a new CKP sensor.<br>REFER to: Crankshaft Position (CKP) Sensor (303-14B Electronic Engine Controls - V8 4.2L Petrol/V8 S/C 4.2L Petrol, Removal and Installation).<br>Reconnect all connectors. CLEAR the DTCs. TEST the system for normal operation. If the concern persists INSTALL a new ECM.<br>REFER to: Engine Control Module (ECM) (303-14A Electronic Engine Controls - 2.5L NA V6 - AJV6/3.0L NA V6 - AJ27, Removal and Installation).<br>Before replacing an ECM, contact dealer technical support. |

| **PINPOINT TEST C : DTC P0340, P0341: BANK 1 CAMSHAFT POSITION (CMP) SENSOR** | |
|---|---|
| **TEST CONDITIONS** | **DETAILS/RESULTS/ACTIONS** |
| **C1: CHECK THE BANK 1 CMP SENSOR FOR CORRECT INSTALLATION** | |
| | 1 Turn the ignition switch to the OFF position. |
| | 2 Check the CMP sensor for correct installation. |
| | Is the CMP sensor correctly installed?<br>**Yes**<br>GO to C2.<br>**No**<br>INSTALL the CMP sensor correctly.<br>REFER to: Camshaft Position (CMP) Sensor RH (303-14B Electronic Engine Controls - V8 4.2L Petrol/V8 S/C 4.2L Petrol, Removal and Installation).<br>CLEAR the DTCs. TEST the system for normal operation. |
| **C2: CHECK THE BANK 1 CMP SENSOR FOR FOREIGN DEBRIS** | |
| | 1 Remove the CMP sensor and inspect for foreign debris. |
| | Is the CMP sensor free of foreign debris?<br>**Yes**<br>GO to C3.<br>**No**<br>CLEAN the sensor and wheel. INSTALL the sensor.<br>REFER to: Camshaft Position (CMP) Sensor RH (303-14B Electronic Engine Controls - V8 4.2L Petrol/V8 S/C 4.2L Petrol, Removal and Installation).<br>CLEAR the DTCs. TEST the system for normal operation. |
| **C3: CHECK THE BANK 1 CMP SENSOR RESISTANCE** | |
| | 1 Measure the resistance between pins 1 and 2 of the bank 1 Camshaft position sensor. |
| | Is the resistance 450 to 650 ohms?<br>**Yes**<br>GO to C4.<br>**No**<br>INSTALL a new CMP sensor,<br>REFER to: Camshaft Position (CMP) Sensor RH (303-14B Electronic Engine Controls - V8 4.2L Petrol/V8 S/C 4.2L Petrol, Removal and Installation).<br>CLEAR the DTCs. TEST the system for normal operation. |
| **C4: CHECK THE BANK 1 CMP SENSOR SIGNAL WIRE FOR OPEN CIRCUIT** | |
| | 1 Disconnect the ECM electrical connector PI01. |
| | 2 Disconnect the CMP sensor electrical connector PI23. |
| | 3 Measure the resistance between the CMP sensor electrical connector PI23, pin 1 (Y) and the ECM electrical connector PI01, pin 94 (Y). |
| | Is the resistance less than 5 ohms?<br>**Yes**<br>GO to C5.<br>**No**<br>REPAIR the circuit. For additional information, refer to the wiring diagrams. CLEAR the DTCs. TEST the system for normal operation. |
| **C5: CHECK THE BANK 1 CMP GROUND WIRE FOR OPEN CIRCUIT** | |
| | 1 Measure the resistance between the CMP sensor electrical connector PI23, pin 2 (R) and the ECM electrical connector PI01, pin 95 (R). |
| | Is the resistance less than 5 ohms?<br>**Yes**<br>GO to C6.<br>**No**<br>REPAIR the circuit. For additional information, refer to the wiring diagrams. CLEAR the DTCs. TEST the system for normal operation. |
| **C6: CHECK THE BANK 1 CMP SENSOR SIGNAL CIRCUIT FOR A SHORT TO GROUND** | |
| | 1 Measure the resistance between the CMP sensor electrical connector PI23, pin 1 (Y) and GROUND. |
| | Is the resistance less than 10,000 ohms?<br>**Yes**<br>REPAIR the short to GROUND. For additional information, refer to the wiring diagrams. CLEAR the DTCs. TEST the system for normal operation.<br>**No**<br>GO to C7. |
| **C7: CHECK THE BANK 1 CMP SENSOR GROUND CIRCUIT FOR A SHORT TO GROUND** | |
| | 1 Measure the resistance between the CMP sensor electrical connector PI23, pin 2 (R) and GROUND. |
| | Is the resistance less than 10,000 ohms?<br>**Yes**<br>REPAIR the short to GROUND. For additional information, refer to the wiring diagrams. CLEAR the DTCs. TEST the system for normal operation.<br>**No**<br>GO to C8. |
| **C8: CHECK THE BANK 1 CMP SENSOR SIGNAL CIRCUIT FOR A SHORT TO BATTERY POSITIVE** | |
| | 1 Measure the voltage between the CMP sensor electrical connector PI23, pin 1 (Y) and GROUND. |

GETtheMANUALS.org

| | |
|---|---|
| | Is the voltage greater than 1 volt?<br>**Yes**<br>REPAIR the short to battery positive. For additional information, refer to the wiring diagrams. CLEAR the DTCs. TEST the system for normal operation.<br>**No**<br>GO to C9. |
| **C9: CHECK THE BANK 1 CMP SENSOR GROUND CIRCUIT FOR A SHORT TO BATTERY POSITIVE** | |
| | 1 Turn the ignition switch to the RUN position. |
| | 2 Measure the voltage between the CMP sensor electrical connector PI23, pin 2 (R) and GROUND. |
| | Is the voltage greater than 1 volt?<br>**Yes**<br>REPAIR the short to battery positive. For additional information, refer to the wiring diagrams. CLEAR the DTCs. TEST the system for normal operation.<br>**No**<br>INSTALL a new CMP sensor,<br>REFER to: Camshaft Position (CMP) Sensor RH (303-14B Electronic Engine Controls - V8 4.2L Petrol/V8 S/C 4.2L Petrol, Removal and Installation).<br>CLEAR DTCs. TEST the system for normal operation. If the DTC is repeated, INSTALL a new ECM.<br>REFER to: Engine Control Module (ECM) (303-14A Electronic Engine Controls - 2.5L NA V6 - AJV6/3.0L NA V6 - AJ27, Removal and Installation).<br>Before replacing an ECM, contact dealer technical support. |

| **PINPOINT TEST D : DTC DTC P0345, P0346, P1340, P1341: BANK 2 CAMSHAFT POSITION (CMP) SENSOR** | |
|---|---|
| **TEST CONDITIONS** | **DETAILS/RESULTS/ACTIONS** |
| **D1: CHECK THE BANK 2 CMP SENSOR FOR CORRECT INSTALLATION** | |
| | 1 Turn the ignition switch to the OFF position. |
| | 2 Check the CMP sensor for correct installation. |
| | Is the CMP sensor correctly installed?<br>**Yes**<br>GO to D2.<br>**No**<br>INSTALL the CMP sensor correctly.<br>REFER to: Camshaft Position (CMP) Sensor LH (303-14B Electronic Engine Controls - V8 4.2L Petrol/V8 S/C 4.2L Petrol, Removal and Installation).<br>CLEAR the DTCs. TEST the system for normal operation. |
| **D2: CHECK THE BANK 2 CMP SENSOR FOR FOREIGN DEBRIS** | |
| | 1 Remove the CMP sensor and inspect for foreign debris. |
| | Is the CMP sensor free of foreign debris?<br>**Yes**<br>GO to D3.<br>**No**<br>CLEAN the sensor and wheel. INSTALL the sensor.<br>REFER to: Camshaft Position (CMP) Sensor LH (303-14B Electronic Engine Controls - V8 4.2L Petrol/V8 S/C 4.2L Petrol, Removal and Installation).<br>CLEAR the DTCs. TEST the system for normal operation. |
| **D3: CHECK THE BANK 2 CMP SENSOR RESISTANCE** | |
| | 1 Measure the resistance between pins 1 and 2 of the bank 2 Camshaft position sensor. |
| | Is the resistance 450 to 650 ohms?<br>**Yes**<br>GO to D4.<br>**No**<br>INSTALL a new CMP sensor.<br>REFER to: Camshaft Position (CMP) Sensor LH (303-14B Electronic Engine Controls - V8 4.2L Petrol/V8 S/C 4.2L Petrol, Removal and Installation).<br>CLEAR the DTCs. TEST the system for normal operation. |
| **D4: CHECK THE BANK 2 CMP SENSOR SIGNAL WIRE FOR OPEN CIRCUIT** | |
| | 1 Disconnect the ECM electrical connector PI01. |
| | 2 Disconnect the CMP sensor electrical connector PI22. |
| | 3 Measure the resistance between the CMP sensor electrical connector PI22, pin 1 (N) and the ECM electrical connector PI01, pin 68 (N). |
| | Is the resistance less than 5 ohms?<br>**Yes**<br>GO to D5.<br>**No**<br>REPAIR the circuit. For additional information, refer to the wiring diagrams. CLEAR the DTCs. TEST the system for normal operation. |
| **D5: CHECK THE BANK 2 CMP GROUND WIRE FOR OPEN CIRCUIT** | |
| | 1 Measure the resistance between the CMP sensor electrical connector PI22, pin 2 (G) and the ECM electrical connector PI01, pin 69 (G). |
| | Is the resistance less than 5 ohms?<br>**Yes**<br>GO to D6.<br>**No**<br>REPAIR the circuit. For additional information, refer to the wiring diagrams. CLEAR the DTCs. TEST the system for normal operation. |
| **D6: CHECK THE BANK 2 CMP SENSOR SIGNAL CIRCUIT FOR A SHORT TO GROUND** | |
| | 1 Measure the resistance between the CMP sensor electrical connector PI22, pin 1 (N) and GROUND. |
| | Is the resistance less than 10,000 ohms?<br>**Yes**<br>REPAIR the short to GROUND. For additional information, refer to the wiring diagrams. CLEAR the DTCs. TEST the system for normal operation.<br>**No**<br>GO to D7. |
| **D7: CHECK THE BANK 2 CMP SENSOR GROUND CIRCUIT FOR A SHORT TO GROUND** | |
| | 1 Disconnect the ECM electrical connector PI01. |
| | 2 Measure the resistance between the CMP sensor electrical connector PI22, pin 2 (G) and GROUND. |

GETtheMANUALS.org

| | |
|---|---|
| | Is the resistance less than 10,000 ohms?<br>**Yes**<br>REPAIR the short to GROUND. For additional information, refer to the wiring diagrams. CLEAR the DTCs. TEST the system for normal operation.<br>**No**<br>GO to D8. |
| **D8: CHECK THE BANK 2 CMP SENSOR SIGNAL CIRCUIT FOR A SHORT TO BATTERY POSITIVE** | |
| | 1 Turn the ignition switch to the ON position. |
| | 2 Measure the voltage between the CMP sensor electrical connector PI22, pin 1 (N) and GROUND. |
| | Is the voltage greater than 1 volt?<br>**Yes**<br>REPAIR the short to battery positive. For additional information, refer to the wiring diagrams. CLEAR the DTCs. TEST the system for normal operation.<br>**No**<br>GO to D9. |
| **D9: CHECK THE BANK 2 CMP SENSOR GROUND CIRCUIT FOR A SHORT TO BATTERY POSITIVE** | |
| | 1 Turn the ignition switch to the ON position. |
| | 2 Measure the voltage between the CMP sensor electrical connector PI22, pin 2 (G) and GROUND. |
| | Is the voltage greater than 1 volt?<br>**Yes**<br>REPAIR the short to battery positive. For additional information, refer to the wiring diagrams. CLEAR the DTCs. TEST the system for normal operation.<br>**No**<br>INSTALL a new CMP sensor.<br>REFER to: Camshaft Position (CMP) Sensor LH (303-14B Electronic Engine Controls - V8 4.2L Petrol/V8 S/C 4.2L Petrol, Removal and Installation).<br>CLEAR the DTCs. TEST the system for normal operation. If the DTC is repeated, INSTALL a new ECM.<br>REFER to: Engine Control Module (ECM) (303-14A Electronic Engine Controls - 2.5L NA V6 - AJV6/3.0L NA V6 - AJ27, Removal and Installation).<br>Before replacing an ECM, contact dealer technical support. |

| **PINPOINT TEST E : DTC P0031, P0032. BANK 1 HO2S HEATER.** | |
|---|---|
| **TEST CONDITIONS** | **DETAILS/RESULTS/ACTIONS** |
| **E1: CHECK THE POWER SUPPLY CIRCUIT TO THE BANK 1 HO2S HEATER** | |
| | 1 Disconnect HO2S sensor electrical connector, PI10. |
| | 2 Turn the ignition switch to the ON position. |
| | 3 Measure the voltage between the bank 1 HO2S electrical connector PI10, pin 1 (WG) and GROUND. |
| | Is the voltage less than 10 volts?<br>**Yes**<br>GO to E6.<br>**No**<br>GO to E2. |
| **E2: CHECK THE GROUND CIRCUIT TO THE BANK 1 HO2S HEATER FOR OPEN CIRCUIT** | |
| | 1 Turn the ignition switch to the OFF position. |
| | 2 Disconnect the ECM electrical connector PI01. |
| | 3 Measure the resistance between the bank 1 HO2S electrical connector PI10, pin 2 (RU) and the ECM electrical connector PI01, pin 1 and pin 2 (RU). |
| | Is the resistance of each wire less than 5 ohms?<br>**Yes**<br>GO to E3.<br>**No**<br>REPAIR the circuit. For additional information, refer to the wiring diagrams. CLEAR the DTCs. TEST the system for normal operation. |
| **E3: CHECK THE BANK 1 HO2S HEATER RESISTANCE** | |
| | 1 Measure the resistance between pins 1 and 2 of the bank 1 H02S. |
| | Is the resistance 3.3 ohms?<br>**Yes**<br>GO to E4.<br>**No**<br>INSTALL a new bank 1 H02S.<br>REFER to: Heated Oxygen Sensor (HO2S) (303-14B Electronic Engine Controls - V8 4.2L Petrol/V8 S/C 4.2L Petrol, Removal and Installation).<br>CLEAR the DTCs. TEST the system for normal operation. |
| **E4: CHECK THE BANK 1 HO2S GROUND CIRCUIT FOR SHORT TO GROUND** | |
| | 1 Measure the resistance between the bank 1 HO2S electrical connector PI10, pin 2 (RU) and GROUND. |
| | Is the resistance less than 10,000 ohms?<br>**Yes**<br>REPAIR the short to GROUND. For additional information, refer to the wiring diagrams. CLEAR the DTCs. TEST the system for normal operation.<br>**No**<br>GO to E5. |
| **E5: CHECK THE BANK 1 HO2S GROUND CIRCUIT FOR SHORT TO BATTERY** | |
| | 1 Check for a voltage between the bank 1 HO2S electrical connector PI10, pin 2 (RU) and GROUND. |
| | Is the voltage greater than 1 volt?<br>**Yes**<br>REPAIR the short to battery. For additional information, refer to the wiring diagrams. CLEAR the DTCs. TEST the system for normal operation.<br>**No**<br>INSTALL a new bank 1 HO2S.<br>REFER to: Heated Oxygen Sensor (HO2S) (303-14B Electronic Engine Controls - V8 4.2L Petrol/V8 S/C 4.2L Petrol, Removal and Installation).<br>. CLEAR DTCs. TEST the system for normal operation. If the DTC is repeated, INSTALL a new ECM.<br>REFER to: Engine Control Module (ECM) (303-14A Electronic Engine Controls - 2.5L NA V6 - AJV6/3.0L NA V6 - AJ27, Removal and Installation).<br>Before replacing an ECM, contact dealer technical support. |
| **E6: CHECK FUSE 20 OF THE FRONT POWER DISTRIBUTION BOX** | |
| | 1 Check the fuse. |

SELF-REPAIR MANUALS.org

| | |
|---|---|
| | Is the fuse OK?<br>**Yes**<br>GO to E8.<br>**No**<br>GO to E7. |
| **E7: CHECK FUSE 20 OF THE FRONT POWER DISTRIBUTION BOX FOR A SHORT TO GROUND** | |
| | 1 Measure the resistance between electrical connector FH32 pin 26 of the engine compartment fuse box and GROUND. |
| | Is the resistance less than 10,000 ohms?<br>**Yes**<br>REPAIR short to ground between the engine compartment fuse box and the RH bank HO2S. For additional information, refer to the wiring diagrams. CLEAR the DTC. TEST the system for normal operation.<br>**No**<br>INSTALL a new fuse. CLEAR the DTC. TEST the system for normal operation. |
| **E8: CHECK THE POWER SUPPLY TO FUSE 20 OF THE FRONT POWER DISTRIBUTION BOX** | |
| | 1 Turn the ignition switch to the ON position. |
| | 2 Measure the voltage between fuse 20 electrical connector FH32 pin 26 and GROUND. |
| | Is the voltage less than 10 volts?<br>**Yes**<br>Repair the circuit from the ECM control relay to the engine compartment fuse box. For additional information, refer to the wiring diagrams. CLEAR the DTC. TEST the system for normal operation.<br>**No**<br>Repair the circuit between the battery and the EMS relay. Test the relay, renew as necessary. CLEAR the DTC. TEST the system for normal operation. |

| **PINPOINT TEST F : DTC P0181, P0182, P0183. FUEL TEMPERATURE SENSOR.** | |
|---|---|
| **TEST CONDITIONS** | **DETAILS/RESULTS/ACTIONS** |
| **F1: CHECK THE FUEL TEMPERATURE SENSOR RESISTANCE** | |
| | 1 Disconnect the FT sensor electrical connector, PI27. |
| | 2 Measure the resistance between pins 1 and 2 of the FT sensor. |
| | Is the resistance 37.35 ohms at 20°C?<br>**Yes**<br>GO to F2.<br>**No**<br>INSTALL a new Fuel Temperature Sensor.<br>REFER to: Fuel Temperature Sensor (303-14B Electronic Engine Controls - V8 4.2L Petrol/V8 S/C 4.2L Petrol, Removal and Installation).<br>CLEAR the DTCs. TEST the system for normal operation. |
| **F2: CHECK CONTINUITY OF THE FUEL TEMPERATURE SENSOR POWER SUPPLY CIRCUIT** | |
| | 1 Turn the ignition switch to the OFF position. |
| | 2 Disconnect the fuel temperature sensor electrical connector PI27. |
| | 3 Disconnect the ECM electrical connector PI01. |
| | 4 Measure the resistance between the fuel temperature sensor electrical connector PI27, pin 2 (YR) and the ECM electrical connector PI01, pin 50 (YR). |
| | Is the resistance less than 5 ohms?<br>**Yes**<br>GO to F3.<br>**No**<br>REPAIR the circuit. For additional information, refer to the wiring diagrams. CLEAR the DTCs. TEST the system for normal operation. |
| **F3: CHECK THE FUEL TEMPERATURE SENSOR GROUND CIRCUIT** | |
| | 1 Measure the resistance between the fuel temperature sensor electrical connector PI27 pin 1 (BG) and GROUND. |
| | Is the resistance less than 5 ohms?<br>**Yes**<br>GO to F4.<br>**No**<br>REPAIR the circuit. For additional information, refer to the wiring diagrams. CLEAR the DTCs. TEST the system for normal operation. |
| **F4: CHECK THE FUEL TEMPERATURE SENSOR CIRCUIT FOR A SHORT TO GROUND** | |
| | 1 Measure the resistance between the fuel temperature sensor electrical connector PI27 pin 2 (YR) and GROUND. |
| | Is the resistance less than 10,000 ohms?<br>**Yes**<br>REPAIR the short to GROUND. For additional information, refer to the wiring diagrams. CLEAR the DTCs. TEST the system for normal operation.<br>**No**<br>GO to F5. |
| **F5: CHECK THE FUEL TEMPERATURE SENSOR GROUND CIRCUIT FOR A SHORT TO BATTERY** | |
| | 1 Disconnect the FT sensor electrical connector, PI27. |
| | 2 Turn the ignition switch to the ON position. |
| | 3 Check for a voltage between PI27, pin 1 (BG) and GROUND. |
| | Is a voltage present?<br>**Yes**<br>REPAIR the short to battery. For additional information, refer to the wiring diagrams. CLEAR the DTCs. TEST the system for normal operation.<br>**No**<br>GO to F6. |
| **F6: CHECK THE FUEL TEMPERATURE SENSOR CIRCUIT FOR A SHORT TO BATTERY POSITIVE** | |
| | 1 Connect the ECM electrical connector PI01. |
| | 2 Turn the ignition switch to the ON position. |
| | 3 Measure the voltage between the fuel temperature sensor electrical connector PI27, pin 2 (YR) and GROUND. |
| | Is the voltage greater than 10 volts?<br>**Yes**<br>REPAIR the short to battery positive. For additional information, refer to the wiring diagrams. CLEAR the DTCs. TEST the system for normal operation.<br>**No**<br>INSTALL a new fuel temperature sensor.<br>REFER to: Fuel Temperature Sensor (303-14B Electronic Engine Controls - V8 4.2L Petrol/V8 S/C 4.2L Petrol, |

GETtheMANUALS.org

| | |
|---|---|
| | Removal and Installation).<br>CLEAR the DTCs. TEST the system for normal operation. If the DTC is repeated, INSTALL a new ECM.<br>REFER to: Engine Control Module (ECM) (303-14A Electronic Engine Controls - 2.5L NA V6 - AJV6/3.0L NA V6 - AJ27, Removal and Installation).<br>Before replacing an ECM, contact dealer technical support. |

| PINPOINT TEST G : DTC P0327, P0328, P1648. KNOCK SENSOR (KS) RIGHT-HAND | |
|---|---|
| **TEST CONDITIONS** | **DETAILS/RESULTS/ACTIONS** |
| **G1: CHECK THE KS RESISTANCE** | |
| | 1 Disconnect the KS electrical connector, PI20. |
| | 2 Measure the resistance between pins 1 and 2 of the KS. |
| | Is the resistance 180 - 220 Kohms?<br>**Yes**<br>GO to G2.<br>**No**<br>INSTALL a new Knock Sensor,<br>REFER to: Knock Sensor (KS) LH (303-14B Electronic Engine Controls - V8 4.2L Petrol/V8 S/C 4.2L Petrol, Removal and Installation). |
| **G2: CHECK THE KS SIGNAL WIRE FOR OPEN CIRCUIT** | |
| | 1 Turn the ignition switch to the OFF position. |
| | 2 Disconnect the KS sensor electrical connector PI20. |
| | 3 Disconnect the ECM electrical connector PI01. |
| | 4 Measure the resistance between PI20, pin 1 (N) and PI01, pin 98 (N). |
| | Is the resistance less than 5 ohms?<br>**Yes**<br>GO to G3.<br>**No**<br>REPAIR the circuit. For additional information, refer to the wiring diagrams. CLEAR the DTCs. TEST the system for normal operation. |
| **G3: CHECK THE KS SIGNAL WIRE FOR SHORT TO BATTERY** | |
| | 1 Connect the KS sensor electrical connector PI20. |
| | 2 Connect the ECM electrical connector PI01. |
| | 3 Turn the ignition switch to the ON position. |
| | 4 Check for a voltage between PI20, pin 1 (N) and GROUND. |
| | Is a voltage present?<br>**Yes**<br>REPAIR the short to battery. For additional information, refer to the wiring diagrams. CLEAR the DTCs. TEST the system for normal operation.<br>**No**<br>GO to G4. |
| **G4: CHECK THE KS SIGNAL WIRE FOR A SHORT TO GROUND** | |
| | 1 Measure the resistance between the KS sensor electrical connector PI20, pin 1 (N) and GROUND. |
| | Is the resistance less than 10,000 ohms?<br>**Yes**<br>REPAIR the short to GROUND. For additional information, refer to the wiring diagrams. CLEAR the DTCs. TEST the system for normal operation.<br>**No**<br>GO to G5. |
| **G5: CHECK THE KS GROUND LEAD FOR OPEN CIRCUIT** | |
| | 1 Disconnect the KS electrical connector, PI20. |
| | 2 Disconnect the ECM electrical connector, PI01. |
| | 3 Measure the resistance between PI20, pin2 (B) and PI01, pin 100 (BG) |
| | Is the resistance less than 5 ohms?<br>**Yes**<br>GO to G6.<br>**No**<br>REPAIR the circuit between PI20, pin2 (B) and PI01, pin 100 (BG) For additional information, refer to the wiring diagrams. CLEAR the DTCs. TEST the system for normal operation. |
| **G6: CHECK THE KS GROUND LEAD FOR SHORT TO BATTERY** | |
| | 1 Connect the KS sensor electrical connector PI20. |
| | 2 Connect the ECM electrical connector PI01. |
| | 3 Turn the ignition switch to the ON position. |
| | 4 Check for a voltage between PI20, pin 1 (N) and GROUND. |
| | Is a voltage present?<br>**Yes**<br>REPAIR the short to battery. For additional information, refer to the wiring diagrams. CLEAR the DTCs. TEST the system for normal operation.<br>**No**<br>INSTALL a new KS,<br>REFER to: Knock Sensor (KS) LH (303-14B Electronic Engine Controls - V8 4.2L Petrol/V8 S/C 4.2L Petrol, Removal and Installation).<br>CLEAR DTCs. TEST the system for normal operation. If the DTC is repeated, INSTALL a new ECM.<br>REFER to: Engine Control Module (ECM) (303-14A Electronic Engine Controls - 2.5L NA V6 - AJV6/3.0L NA V6 - AJ27, Removal and Installation).<br>Before replacing an ECM, contact dealer technical support. |

| PINPOINT TEST H : DTC P0332, P0333, P1648. KNOCK SENSOR (KS) LEFT-HAND | |
|---|---|
| **TEST CONDITIONS** | **DETAILS/RESULTS/ACTIONS** |
| **H1: CHECK THE KS RESISTANCE** | |
| | 1 Disconnect the KS electrical connector, PI19. |
| | 2 Measure the resistance between pins 1 and 2 of the KS. |

GETtheMANUALS.org

| | |
|---|---|
| | Is the resistance 180 - 220 Kohms?<br>**Yes**<br>GO to H2.<br>**No**<br>INSTALL a new Knock Sensor,<br>REFER to: Knock Sensor (KS) LH (303-14B Electronic Engine Controls - V8 4.2L Petrol/V8 S/C 4.2L Petrol, Removal and Installation). |
| **H2: CHECK THE KS SIGNAL WIRE FOR OPEN CIRCUIT** | |
| | 1 Turn the ignition switch to the OFF position. |
| | 2 Disconnect the KS sensor electrical connector PI19. |
| | 3 Disconnect the ECM electrical connector PI01. |
| | 4 Measure the resistance between PI19, pin 1 (N) and PI01, pin 99 (N). |
| | Is the resistance less than 5 ohms?<br>**Yes**<br>GO to H3.<br>**No**<br>REPAIR the circuit. For additional information, refer to the wiring diagrams. CLEAR the DTCs. TEST the system for normal operation. |
| **H3: CHECK THE KS SIGNAL WIRE FOR SHORT TO BATTERY** | |
| | 1 Connect the KS sensor electrical connector PI19. |
| | 2 Connect the ECM electrical connector PI01. |
| | 3 Turn the ignition switch to the ON position. |
| | 4 Check for a voltage between PI19, pin 1 (N) and GROUND. |
| | Is a voltage present?<br>**Yes**<br>REPAIR the short to battery. For additional information, refer to the wiring diagrams. CLEAR the DTCs. TEST the system for normal operation.<br>**No**<br>GO to H4. |
| **H4: CHECK THE KS SIGNAL WIRE FOR A SHORT TO GROUND** | |
| | 1 Measure the resistance between the KS sensor electrical connector PI19, pin 1 (N) and GROUND. |
| | Is the resistance less than 10,000 ohms?<br>**Yes**<br>REPAIR the short to GROUND. For additional information, refer to the wiring diagrams. CLEAR the DTCs. TEST the system for normal operation.<br>**No**<br>GO to H5. |
| **H5: CHECK THE KS GROUND LEAD FOR OPEN CIRCUIT** | |
| | 1 Disconnect the KS electrical connector, PI19. |
| | 2 Disconnect the ECM electrical connector, PI01. |
| | 3 Measure the resistance between PI19, pin2 (B) and PI01, pin 100 (BG) |
| | Is the resistance less than 5 ohms?<br>**Yes**<br>GO to H6.<br>**No**<br>REPAIR the circuit between PI19, pin2 (B) and PI01, pin 100 (BG) For additional information, refer to the wiring diagrams. CLEAR the DTCs. TEST the system for normal operation. |
| **H6: CHECK THE KS GROUND LEAD FOR SHORT TO BATTERY** | |
| | 1 Connect the KS sensor electrical connector PI19. |
| | 2 Connect the ECM electrical connector PI01. |
| | 3 Turn the ignition switch to the ON position. |
| | 4 Check for a voltage between PI19, pin 1 (N) and GROUND. |
| | Is a voltage present?<br>**Yes**<br>REPAIR the short to battery. For additional information, refer to the wiring diagrams. CLEAR the DTCs. TEST the system for normal operation.<br>**No**<br>INSTALL a new KS,<br>REFER to: Knock Sensor (KS) LH (303-14B Electronic Engine Controls - V8 4.2L Petrol/V8 S/C 4.2L Petrol, Removal and Installation).<br>CLEAR DTCs. TEST the system for normal operation. If the DTC is repeated, INSTALL a new ECM.<br>REFER to: Engine Control Module (ECM) (303-14A Electronic Engine Controls - 2.5L NA V6 - AJV6/3.0L NA V6 - AJ27, Removal and Installation).<br>Before replacing an ECM, contact dealer technical support. |

| **PINPOINT TEST I : DTC P0196, P0197, P0198. OIL TEMPERATURE SENSOR.** | |
|---|---|
| **TEST CONDITIONS** | **DETAILS/RESULTS/ACTIONS** |
| **I1: CHECK THE OIL TEMPERATURE SENSOR SIGNAL WIRE FOR OPEN CIRCUIT** | |
| | 1 Turn the ignition switch to the OFF position. |
| | 2 Disconnect the oil temperature sensor electrical connector PI24. |
| | 3 Disconnect the ECM electrical connector PI01. |
| | 4 Measure the resistance between the oil temperature sensor electrical connector PI24, pin 1 (Y) and the ECM electrical connector PI01, pin 78 (Y). |
| | Is the resistance less than 5 ohms?<br>**Yes**<br>GO to I2.<br>**No**<br>REPAIR the circuit. For additional information, refer to the wiring diagrams. CLEAR the DTCs. TEST the system for normal operation. |
| **I2: CHECK THE OIL TEMPERATURE SENSOR GROUND CIRCUIT FOR OPEN CIRCUIT** | |
| | 1 Measure the resistance between the oil temperature sensor electrical connector PI24, pin 2 (BG) and GROUND. |
| | Is the resistance less than 5 ohms?<br>**Yes**<br>GO to I3.<br>**No** |

GETtheMANUALS.org

| | |
|---|---|
| | REPAIR the circuit. For additional information, refer to the wiring diagrams. CLEAR the DTCs. TEST the system for normal operation. |
| **I3: CHECK THE OIL TEMPERATURE SENSOR GROUND CIRCUIT FOR SHORT TO BATTERY** | |
| | 1 Connect ECM electrical connector, PI01 |
| | 2 Turn the ignition switch to the RUN position. |
| | 3 Measure the voltage between the oil temperature sensor electrical connector PI24, pin 2 (BG) and GROUND. |
| | Is a voltage present?<br>**Yes**<br>REPAIR the short circuit. For additional information, refer to the wiring diagrams. CLEAR the DTCs. TEST the system for normal operation.<br>**No**<br>GO to I4. |
| **I4: CHECK THE OIL TEMPERATURE SENSOR CIRCUIT FOR A SHORT TO GROUND** | |
| | 1 Measure the resistance between the oil temperature sensor electrical connector PI24, pin 1 (Y) and GROUND. |
| | Is the resistance less than 10,000 ohms?<br>**Yes**<br>REPAIR the short to GROUND. For additional information, refer to the wiring diagrams. CLEAR the DTCs. TEST the system for normal operation.<br>**No**<br>GO to I5. |
| **I5: CHECK THE OIL TEMPERATURE SENSOR CIRCUIT FOR A SHORT TO BATTERY POSITIVE** | |
| | 1 Connect ECM electrical connector, PI01 |
| | 2 Turn the ignition switch to the ON position. |
| | 3 Measure the voltage between the oil temperature sensor electrical connector PI24, pin 1 (Y) and GROUND. |
| | Is the voltage greater than 10 volts?<br>**Yes**<br>REPAIR the short to battery positive. For additional information, refer to the wiring diagrams. CLEAR the DTCs. TEST the system for normal operation.<br>**No**<br>INSTALL a new oil temperature sensor,<br>REFER to: Oil Temperature Sensor (303-14B Electronic Engine Controls - V8 4.2L Petrol/V8 S/C 4.2L Petrol, Removal and Installation).<br>CLEAR DTCs. TEST the system for normal operation. If the DTC is repeated, INSTALL a new ECM.<br>REFER to: Engine Control Module (ECM) (303-14A Electronic Engine Controls - 2.5L NA V6 - AJV6/3.0L NA V6 - AJ27, Removal and Installation).<br>Before replacing an ECM, contact dealer technical support. |

| **PINPOINT TEST J : DTC P0131, P0132, P0133, P1646. BANK 1 HO2S.** | |
|---|---|
| **TEST CONDITIONS** | **DETAILS/RESULTS/ACTIONS** |
| **J1: CHECK THE CONSTANT CIRCUIT OF THE BANK 1 HO2S FOR OPEN CIRCUIT** | |
| | 1 Disconnect the bank 1 HO2S electrical connector PI10. |
| | 2 Disconnect the ECM electrical connector, PI01. |
| | 3 Measure the resistance between PI01, pin 84 (Y) and PI10, pin 4 (Y) |
| | Is the resistance less than 5 ohms?<br>**Yes**<br>GO to J2.<br>**No**<br>REPAIR the circuit. For additional information, refer to the wiring diagrams. CLEAR the DTCs. TEST the system for normal operation. |
| **J2: CHECK THE CONSTANT CIRCUIT OF THE BANK 1 HO2S FOR SHORT TO GROUND** | |
| | 1 Measure the resistance between PI10, pin 4 (Y) and GROUND. |
| | Is the resistance less than 10,000 ohms?<br>**Yes**<br>REPAIR the short circuit. For additional information, refer to the wiring diagrams. CLEAR the DTCs. TEST the system for normal operation.<br>**No**<br>GO to J3. |
| **J3: CHECK THE CONSTANT CIRCUIT OF THE BANK 1 HO2S FOR SHORT TO BATTERY** | |
| | 1 Connect the ECM electrical connector PI01. |
| | 2 Turn the ignition switch to the ON position. |
| | 3 Measure the voltage between PI10, pin 4 (Y) and GROUND. |
| | Is the voltage greater than 5 volts?<br>**Yes**<br>REPAIR the short circuit. For additional information, refer to the wiring diagrams. CLEAR the DTCs. TEST the system for normal operation.<br>**No**<br>GO to J4. |
| **J4: CHECK THE VARIABLE CIRCUIT OF THE BANK 1 HO2S FOR OPEN CIRCUIT** | |
| | 1 Disconnect the bank 1 HO2S electrical connector PI10. |
| | 2 Disconnect the ECM electrical connector, PI01. |
| | 3 Measure the resistance between PI01, pin 83 (R) and PI10, pin 3 (R) |
| | Is the resistance less than 5 ohms?<br>**Yes**<br>GO to J5.<br>**No**<br>REPAIR the circuit. For additional information, refer to the wiring diagrams. CLEAR the DTCs. TEST the system for normal operation. |
| **J5: CHECK THE VARIABLE CIRCUIT OF THE BANK 1 HO2S FOR SHORT TO GROUND** | |
| | 1 Measure the resistance between PI01, pin 83 (R) and GROUND. |
| | Is the resistance less than 10,000 ohms?<br>**Yes**<br>REPAIR the short circuit. For additional information, refer to the wiring diagrams. CLEAR the DTCs. TEST the system for normal operation.<br>**No**<br>GO to J6. |

GETtheMANUALS.org

| J6: CHECK THE VARIABLE CIRCUIT OF THE BANK 1 HO2S FOR SHORT TO BATTERY | |
|---|---|
| | 1 Connect the ECM electrical connector PI01. |
| | 2 Turn the ignition switch to the ON position. |
| | 3 Measure the voltage between PI10, pin 3 (R) and GROUND. |
| | Is the voltage greater than 1 volt?<br>**Yes**<br>REPAIR the short circuit. For additional information, refer to the wiring diagrams. CLEAR the DTCs. TEST the system for normal operation.<br>**No**<br>INSTALL a new bank 1 HO2S,<br>REFER to: Heated Oxygen Sensor (HO2S) (303-14B Electronic Engine Controls - V8 4.2L Petrol/V8 S/C 4.2L Petrol, Removal and Installation).<br>CLEAR the DTCs. TEST the system for normal operation. If the DTC is repeated, INSTALL a new ECM.<br>REFER to: Engine Control Module (ECM) (303-14A Electronic Engine Controls - 2.5L NA V6 - AJV6/3.0L NA V6 - AJ27, Removal and Installation).<br>Before replacing an ECM, contact dealer technical support. |

## PINPOINT TEST K : DTC P0037, P0038, P0137, P0138, P0140. BANK 1 CATALYST MONITOR.

| TEST CONDITIONS | DETAILS/RESULTS/ACTIONS |
|---|---|
| **K1: CHECK THE POWER SUPPLY CIRCUIT TO THE BANK 1 CATALYST MONITOR HEATER** | |
| | 1 Turn the ignition switch to the OFF position. |
| | 2 Disconnect the bank 1 catalyst monitor sensor electrical connector PI11. |
| | 3 Turn the ignition switch to the ON position. |
| | 4 Measure the voltage between PI11, pin 1 (WG) and GROUND. |
| | Is the voltage less than 10 volts?<br>**Yes**<br>REPAIR the circuit. For additional information, refer to the wiring diagrams. CLEAR the DTCs. TEST the system for normal operation.<br>(This circuit includes the power distribution fuse box and EMS control relay.)<br>**No**<br>GO to K2. |
| **K2: CHECK THE GROUND SUPPLY CIRCUIT TO THE BANK 1 CATALYST MONITOR HEATER FOR CONTINUITY** | |
| | 1 Turn the ignition switch to the OFF position. |
| | 2 Disconnect the ECM electrical connector PI01. |
| | 3 Measure the resistance between PI11, pin 2 (UY) and PI01, pin 92 (UY) |
| | Is the resistance less than 5 ohms?<br>**Yes**<br>GO to K3.<br>**No**<br>REPAIR the circuit. For additional information, refer to the wiring diagrams. CLEAR the DTCs. TEST the system for normal operation. |
| **K3: CHECK THE BANK 1 CATALYST MONITOR HEATER RESISTANCE** | |
| | 1 Measure the resistance between pins 1 and 2 of the bank 1 Catalyst Monitor heater. |
| | Is the resistance 5.0 ohms?<br>**Yes**<br>GO to K4.<br>**No**<br>INSTALL a new bank 1 Catalyst Monitor,<br>REFER to: Catalyst Monitor Sensor (303-14B Electronic Engine Controls - V8 4.2L Petrol/V8 S/C 4.2L Petrol, Removal and Installation).<br>CLEAR the DTCs. TEST the system for normal operation. |
| **K4: CHECK THE GROUND SUPPLY CIRCUIT TO THE BANK 1 CATALYST MONITOR HEATER FOR SHORT TO GROUND** | |
| | 1 Measure the resistance between PI11, pin 2 (UY) and GROUND. |
| | Is the resistance less than 10,000 ohms?<br>**Yes**<br>REPAIR the short circuit. For additional information, refer to the wiring diagrams. CLEAR the DTCs. TEST the system for normal operation.<br>**No**<br>GO to K5. |
| **K5: CHECK THE GROUND SUPPLY CIRCUIT TO THE BANK 1 CATALYST MONITOR HEATER FOR SHORT TO BATTERY** | |
| | 1 Connect the ECM electrical connector, PI01. |
| | 2 Turn the ignition switch to the ON position. |
| | 3 Check for a voltage at PI11, pin 2 (UY) |
| | Is the voltage greater than 1 volt?<br>**Yes**<br>REPAIR the short circuit. For additional information, refer to the wiring diagrams. CLEAR the DTCs. TEST the system for normal operation.<br>**No**<br>GO to K6. |
| **K6: CHECK THE CONSTANT CIRCUIT OF THE BANK 1 CATALYST MONITOR SENSOR FOR OPEN CIRCUIT** | |
| | 1 Disconnect the bank 1 catalyst monitor sensor electrical connector, PI11. |
| | 2 Disconnect the ECM electrical connector, PI01. |
| | 3 Measure the resistance between PI11, pin 3 (B) and PI01, pin 130 (BW) |
| | Is the resistance less than 5 ohms?<br>**Yes**<br>GO to K7.<br>**No**<br>REPAIR the circuit. For additional information, refer to the wiring diagrams. CLEAR the DTCs. TEST the system for normal operation. |
| **K7: CHECK THE CONSTANT CIRCUIT OF THE BANK 1 CATALYST MONITOR SENSOR FOR SHORT TO GROUND** | |
| | 1 Measure the resistance between PI01, pin 130 (BW) and GROUND. |

GETtheMANUALS.org

| | |
|---|---|
| | Is the resistance less than 10,000 ohms?<br>**Yes**<br>REPAIR the short circuit. For additional information, refer to the wiring diagrams. CLEAR the DTCs. TEST the system for normal operation.<br>**No**<br>GO to K8. |
| **K8: CHECK THE CONSTANT CIRCUIT OF THE BANK 1 CATALYST MONITOR SENSOR FOR SHORT TO BATTERY** | |
| | 1 Connect the ECM electrical connector, PI01. |
| | 2 Turn the ignition switch to the ON position. |
| | 3 Measure the voltage between PI11, pin 3 (B) and GROUND. |
| | Is the voltage greater than 5 volts?<br>**Yes**<br>REPAIR the short circuit. For additional information, refer to the wiring diagrams. CLEAR the DTCs. TEST the system for normal operation.<br>**No**<br>GO to K9. |
| **K9: CHECK THE VARIABLE CIRCUIT OF THE BANK 1 CATALYST MONITOR SENSOR FOR OPEN CIRCUIT** | |
| | 1 Disconnect the bank 1 HO2S electrical connector PI11. |
| | 2 Disconnect the ECM electrical connector, PI01. |
| | 3 Measure the resistance between PI01, pin 128 (N) and PI11, pin 4 (N) |
| | Is the resistance less than 5 ohms?<br>**Yes**<br>GO to K10.<br>**No**<br>REPAIR the circuit. For additional information, refer to the wiring diagrams. CLEAR the DTCs. TEST the system for normal operation. |
| **K10: CHECK THE VARIABLE CIRCUIT OF THE BANK 1 CATALYST MONITOR SENSOR FOR SHORT TO GROUND** | |
| | 1 Measure the resistance between PI11, pin 4 (N) and GROUND. |
| | Is the resistance less than 10,000 ohms?<br>**Yes**<br>REPAIR the short circuit. For additional information, refer to the wiring diagrams. CLEAR the DTCs. TEST the system for normal operation.<br>**No**<br>GO to K11. |
| **K11: CHECK THE VARIABLE CIRCUIT OF THE BANK 1 CATALYST MONITOR SENSOR FOR SHORT TO BATTERY** | |
| | 1 Connect the ECM electrical connector PI01. |
| | 2 Turn the ignition switch to the ON position. |
| | 3 Measure the voltage between PI11, pin 4 (N) and GROUND. |
| | Is the voltage greater than 1 volt?<br>**Yes**<br>REPAIR the short circuit. For additional information, refer to the wiring diagrams. CLEAR the DTCs. TEST the system for normal operation.<br>**No**<br>INSTALL a new bank 1 Catalyst monitor sensor,<br>REFER to: Catalyst Monitor Sensor (303-14B Electronic Engine Controls - V8 4.2L Petrol/V8 S/C 4.2L Petrol, Removal and Installation).<br>CLEAR the DTCs. TEST the system for normal operation. If the DTC is repeated, INSTALL a new ECM.<br>REFER to: Engine Control Module (ECM) (303-14A Electronic Engine Controls - 2.5L NA V6 - AJV6/3.0L NA V6 - AJ27, Removal and Installation).<br>Before replacing an ECM, contact dealer technical support. |

## PINPOINT TEST L : DTC P0051, P0052, P0151, P0152, P0153, P1647. BANK 2 HO2S.

| TEST CONDITIONS | DETAILS/RESULTS/ACTIONS |
|---|---|
| **L1: CHECK THE CONSTANT CIRCUIT OF THE BANK 2 HO2S FOR OPEN CIRCUIT** | |
| | 1 Disconnect the bank 2 HO2S electrical connector PI12. |
| | 2 Disconnect the ECM electrical connector, PI01. |
| | 3 Measure the resistance between PI01, pin 108 (N) and PI12, pin 4 (N) |
| | Is the resistance less than 5 ohms?<br>**Yes**<br>GO to L2.<br>**No**<br>REPAIR the circuit. For additional information, refer to the wiring diagrams. CLEAR the DTCs. TEST the system for normal operation. |
| **L2: CHECK THE CONSTANT CIRCUIT OF THE BANK 2 HO2S FOR SHORT TO GROUND** | |
| | 1 Measure the resistance between PI01, pin 108 (N) and GROUND. |
| | Is the resistance less than 10,000 ohms?<br>**Yes**<br>REPAIR the short circuit. For additional information, refer to the wiring diagrams. CLEAR the DTCs. TEST the system for normal operation.<br>**No**<br>GO to L3. |
| **L3: CHECK THE CONSTANT CIRCUIT OF THE BANK 2 HO2S FOR SHORT TO BATTERY** | |
| | 1 Connect the ECM electrical connector PI01. |
| | 2 Turn the ignition switch to the ON position. |
| | 3 Measure the voltage between PI12, pin 4 (N) and GROUND. |
| | Is the voltage greater than 5 volts?<br>**Yes**<br>REPAIR the short circuit. For additional information, refer to the wiring diagrams. CLEAR the DTCs. TEST the system for normal operation.<br>**No**<br>GO to L4. |
| **L4: CHECK THE VARIABLE CIRCUIT OF THE BANK 2 HO2S FOR OPEN CIRCUIT** | |
| | 1 Disconnect the bank 1 HO2S electrical connector, PI12. |
| | 2 Disconnect the ECM electrical connector, PI01. |
| | 3 Measure the resistance between PI01, pin 107 (G) and PI12, pin 3 (G) |

GETtheMANUALS.org

| | |
|---|---|
| | Is the resistance less than 5 ohms?<br>**Yes**<br>GO to L5.<br>**No**<br>REPAIR the circuit. For additional information, refer to the wiring diagrams. CLEAR the DTCs. TEST the system for normal operation. |
| **L5: CHECK THE VARIABLE CIRCUIT OF THE BANK 2 HO2S FOR SHORT TO GROUND** | |
| | 1 Measure the resistance between PI01, pin 107 (G) and GROUND. |
| | Is the resistance less than 10,000 ohms?<br>**Yes**<br>REPAIR the short circuit. For additional information, refer to the wiring diagrams. CLEAR the DTCs. TEST the system for normal operation.<br>**No**<br>GO to L6. |
| **L6: CHECK THE VARIABLE CIRCUIT OF THE BANK 2 HO2S FOR SHORT TO BATTERY** | |
| | 1 Connect the ECM electrical connector PI01. |
| | 2 Turn the ignition switch to the ON position. |
| | 3 Measure the voltage between PI12, pin 3 (G) and GROUND. |
| | Is the voltage greater than 1 volt?<br>**Yes**<br>REPAIR the short circuit. For additional information, refer to the wiring diagrams. CLEAR the DTCs. TEST the system for normal operation.<br>**No**<br>INSTALL a new bank 2 HO2S,<br>REFER to: Heated Oxygen Sensor (HO2S) (303-14B Electronic Engine Controls - V8 4.2L Petrol/V8 S/C 4.2L Petrol, Removal and Installation).<br>CLEAR the DTCs. TEST the system for normal operation. If the DTC is repeated, INSTALL a new ECM.<br>REFER to: Engine Control Module (ECM) (303-14A Electronic Engine Controls - 2.5L NA V6 - AJV6/3.0L NA V6 - AJ27, Removal and Installation).<br>Before replacing an ECM, contact dealer technical support. |

| **PINPOINT TEST M : DTC P0057, P0058, P0157, P0158, P0160. BANK 2 CATALYST MONITOR.** | |
|---|---|
| **TEST CONDITIONS** | **DETAILS/RESULTS/ACTIONS** |
| **M1: CHECK THE POWER SUPPLY CIRCUIT TO THE BANK 2 CATALYST MONITOR HEATER** | |
| | 1 Turn the ignition switch to the OFF position. |
| | 2 Disconnect the bank 2 catalyst monitor sensor electrical connector PI13. |
| | 3 Turn the ignition switch to the ON position. |
| | 4 Measure the voltage between PI13, pin 1 (WR) and GROUND. |
| | Is the voltage less than 10 volts?<br>**Yes**<br>REPAIR the circuit. For additional information, refer to the wiring diagrams. CLEAR the DTCs. TEST the system for normal operation.<br>**No**<br>GO to M2. |
| **M2: CHECK THE GROUND SUPPLY CIRCUIT TO THE BANK 2 CATALYST MONITOR HEATER FOR CONTINUITY** | |
| | 1 Turn the ignition switch to the OFF position. |
| | 2 Disconnect the ECM electrical connector PI01. |
| | 3 Measure the resistance between PI13, pin 2 (RW) and PI01, pin 93 (RW) |
| | Is the resistance less than 5 ohms?<br>**Yes**<br>GO to M3.<br>**No**<br>REPAIR the circuit. For additional information, refer to the wiring diagrams. CLEAR the DTCs. TEST the system for normal operation. |
| **M3: CHECK THE BANK 2 CATALYST MONITOR HEATER RESISTANCE** | |
| | 1 Measure the resistance between pins 1 and 2 of the bank 2 Catalyst Monitor heater. |
| | Is the resistance 5.0 ohms?<br>**Yes**<br>GO to M4.<br>**No**<br>INSTALL a new bank 2 Catalyst Monitor,<br>REFER to: Catalyst Monitor Sensor (303-14B Electronic Engine Controls - V8 4.2L Petrol/V8 S/C 4.2L Petrol, Removal and Installation).<br>CLEAR the DTCs. TEST the system for normal operation. |
| **M4: CHECK THE GROUND SUPPLY CIRCUIT TO THE BANK 2 CATALYST MONITOR HEATER FOR SHORT TO GROUND** | |
| | 1 Measure the resistance between PI13, pin 2 (RW) and GROUND. |
| | Is the resistance less than 10,000 ohms?<br>**Yes**<br>REPAIR the short circuit. For additional information, refer to the wiring diagrams. CLEAR the DTCs. TEST the system for normal operation.<br>**No**<br>GO to M5. |
| **M5: CHECK THE GROUND SUPPLY CIRCUIT TO THE BANK 2 CATALYST MONITOR HEATER FOR SHORT TO BATTERY** | |
| | 1 Connect the ECM electrical connector, PI01. |
| | 2 Turn the ignition switch to the ON position. |
| | 3 Check for a voltage at PI13, pin2 (RW) |
| | Is the voltage greater than 1 volt?<br>**Yes**<br>REPAIR the short circuit. For additional information, refer to the wiring diagrams. CLEAR the DTCs. TEST the system for normal operation.<br>**No**<br>GO to M6. |
| **M6: CHECK THE CONSTANT CIRCUIT OF THE BANK 2 CATALYST MONITOR SENSOR FOR OPEN CIRCUIT** | |
| | 1 Disconnect the bank 2 catalyst monitor sensor electrical connector, PI13. |
| | 2 Disconnect the ECM electrical connector, PI01. |

GETtheMANUALS.org

| | |
|---|---|
| | 3 Measure the resistance between PI13, pin 3 (B) and PI01, pin 130 (BW) |
| | Is the resistance less than 5 ohms?<br>**Yes**<br>GO to M7.<br>**No**<br>REPAIR the circuit. For additional information, refer to the wiring diagrams. CLEAR the DTCs. TEST the system for normal operation. |
| **M7: CHECK THE CONSTANT CIRCUIT OF THE BANK 2 CATALYST MONITOR SENSOR FOR SHORT TO GROUND** | |
| | 1 Measure the resistance between PI01, pin 130 (BW) and GROUND. |
| | Is the resistance less than 10,000 ohms?<br>**Yes**<br>REPAIR the short circuit. For additional information, refer to the wiring diagrams. CLEAR the DTCs. TEST the system for normal operation.<br>**No**<br>GO to M8. |
| **M8: CHECK THE CONSTANT CIRCUIT OF THE BANK 2 CATALYST MONITOR SENSOR FOR SHORT TO BATTERY** | |
| | 1 Connect the ECM electrical connector, PI01. |
| | 2 Turn the ignition switch to the ON position. |
| | 3 Measure the voltage between PI13, pin 3 (B) and GROUND. |
| | Is the voltage greater than 5 volts?<br>**Yes**<br>REPAIR the short circuit. For additional information, refer to the wiring diagrams. CLEAR the DTCs. TEST the system for normal operation.<br>**No**<br>GO to M9. |
| **M9: CHECK THE VARIABLE CIRCUIT OF THE BANK 2 CATALYST MONITOR SENSOR FOR OPEN CIRCUIT** | |
| | 1 Disconnect the bank 2 HO2S electrical connector PI13. |
| | 2 Disconnect the ECM electrical connector, PI01. |
| | 3 Measure the resistance between PI01, pin 129 (N) and PI13, pin 4 (N) |
| | Is the resistance less than 5 ohms?<br>**Yes**<br>GO to M10.<br>**No**<br>REPAIR the circuit. For additional information, refer to the wiring diagrams. CLEAR the DTCs. TEST the system for normal operation. |
| **M10: CHECK THE VARIABLE CIRCUIT OF THE BANK 2 CATALYST MONITOR SENSOR FOR SHORT TO GROUND** | |
| | 1 Measure the resistance between PI13, pin 4 (N) and GROUND. |
| | Is the resistance less than 10,000 ohms?<br>**Yes**<br>REPAIR the short circuit. For additional information, refer to the wiring diagrams. CLEAR the DTCs. TEST the system for normal operation.<br>**No**<br>GO to M11. |
| **M11: CHECK THE VARIABLE CIRCUIT OF THE BANK 2 CATALYST MONITOR SENSOR FOR SHORT TO BATTERY** | |
| | 1 Connect the ECM electrical connector PI01. |
| | 2 Turn the ignition switch to the ON position. |
| | 3 Measure the voltage between PI13, pin 4 (N) and GROUND. |
| | Is the voltage greater than 1 volt?<br>**Yes**<br>REPAIR the short circuit. For additional information, refer to the wiring diagrams. CLEAR the DTCs. TEST the system for normal operation.<br>**No**<br>INSTALL a new bank 2 Catalyst monitor sensor,<br>REFER to: Catalyst Monitor Sensor (303-14B Electronic Engine Controls - V8 4.2L Petrol/V8 S/C 4.2L Petrol, Removal and Installation).<br>CLEAR the DTCs. TEST the system for normal operation. If the DTC is repeated, INSTALL a new ECM.<br>REFER to: Engine Control Module (ECM) (303-14A Electronic Engine Controls - 2.5L NA V6 - AJV6/3.0L NA V6 - AJ27, Removal and Installation).<br>Before replacing an ECM, contact dealer technical support. |

| **PINPOINT TEST N : DTC P0101, P0102, P0103, P1104. MAF SENSOR.** | |
|---|---|
| **TEST CONDITIONS** | **DETAILS/RESULTS/ACTIONS** |
| **N1: CHECK THE MASS AIR FLOW (MAF) SENSOR POWER SUPPLY** | |
| | 1 Turn the ignition switch to the OFF position. |
| | 2 Disconnect the MAF sensor electrical connector PI14. |
| | 3 Turn the ignition switch to the ON position. |
| | 4 Measure the voltage between PI14, pin 1 (GU) and GROUND. |
| | Is the voltage less than 10 volts?<br>**Yes**<br>REPAIR the circuit. For additional information, refer to wiring diagrams. CLEAR the DTC. TEST the system for normal operation.<br>(This circuit includes the power distribution fuse box and the EMS relay.)<br>**No**<br>GO to N2. |
| **N2: CHECK THE MAF SENSOR GROUND CIRCUIT** | |
| | 1 Turn the ignition switch to the ON position. |
| | 2 Measure the resistance between PI14 pin 2 (BK) and GROUND. |
| | Is the resistance less than 5 ohms?<br>**Yes**<br>GO to N3.<br>**No**<br>REPAIR the circuit. For additional information, refer to the wiring diagrams. CLEAR the DTCs. TEST the system for normal operation.<br>(This circuit includes the ECM. For additional information, refer to dealer technical support.) |
| **N3: CHECK THE MAF SENSOR SIGNAL CIRCUIT FOR OPEN CIRCUIT** | |

GETtheMANUALS.org

| | |
|---|---|
| | 1 Disconnect the ECM electrical connector, PI01. |
| | 2 Measure the resistance between PI01, pin 44 (GW) and PI14, pin 3, (GW) |
| | Is the resistance less than 5 ohms?<br>**Yes**<br>GO to N4.<br>**No**<br>REPAIR the circuit. For additional information, refer to the wiring diagrams. CLEAR the DTCs. TEST the system for normal operation. |
| **N4: CHECK THE MAF SENSOR CIRCUIT FOR SHORT TO GROUND** | |
| | 1 Connect the ECM electrical connector, PI01. |
| | 2 Measure the resistance between PI14 pin 3 (GW) and GROUND. |
| | Is the resistance less than 10,000 ohms?<br>**Yes**<br>REPAIR the short to GROUND. For additional information, refer to wiring diagrams. CLEAR the DTC. TEST the system for normal operation.<br>**No**<br>INSTALL a new MAF sensor,<br>REFER to: Mass Air Flow (MAF) Sensor (303-14B Electronic Engine Controls - V8 4.2L Petrol/V8 S/C 4.2L Petrol, Removal and Installation).<br>CLEAR the DTC. TEST the system for normal operation. If the DTC is repeated, INSTALL a new ECM.<br>REFER to: Engine Control Module (ECM) (303-14A Electronic Engine Controls - 2.5L NA V6 - AJV6/3.0L NA V6 - AJ27, Removal and Installation).<br>Before replacing an ECM, contact dealer technical support. |

| **PINPOINT TEST O : P0111, P0112, P0113. IAT SENSOR.** | |
|---|---|
| **TEST CONDITIONS** | **DETAILS/RESULTS/ACTIONS** |
| **O1: CHECK THE INTAKE AIR TEMPERATURE (IAT) SENSOR RESISTANCE** | |
| | 1 Turn the ignition switch to the OFF position. |
| | 2 Disconnect the MAF sensor electrical connector PI14. |
| | 3 Measure the resistance between pins 4 and 5 of the MAF sensor. |
| | Is the resistance 2450 ohms at 20°C?<br>**Yes**<br>GO to O2.<br>**No**<br>INSTALL a new MAF sensor.<br>REFER to: Mass Air Flow (MAF) Sensor (303-14B Electronic Engine Controls - V8 4.2L Petrol/V8 S/C 4.2L Petrol, Removal and Installation).<br>CLEAR the DTC. TEST the system for normal operation. |
| **O2: CHECK CONTINUITY OF THE INTAKE AIR TEMPERATURE (IAT) SENSOR POWER SUPPLY CIRCUIT** | |
| | 1 Turn the ignition switch to the OFF position. |
| | 2 Disconnect the MAF sensor electrical connector PI14. |
| | 3 Disconnect the ECM electrical connector PI01. |
| | 4 Measure the resistance between the MAF sensor electrical connector PI14, pin 4 (U) and the ECM electrical connector PI01, pin 71 (U). |
| | Is the resistance less than 5 ohms?<br>**Yes**<br>GO to O3.<br>**No**<br>REPAIR the circuit. For additional information, refer to the wiring diagrams. CLEAR the DTCs. TEST the system for normal operation. |
| **O3: CHECK CONTINUITY OF THE IAT SENSOR CIRCUIT** | |
| | 1 Measure the resistance between the MAF sensor electrical connector PI14, pin 5 (BG) and the ECM electrical connector PI01, pin 19 (BG). |
| | Is the resistance less than 5 ohms?<br>**Yes**<br>GO to O4.<br>**No**<br>REPAIR the circuit. For additional information, refer to the wiring diagrams. CLEAR the DTCs. TEST the system for normal operation. |
| **O4: CHECK THE IAT SENSOR POWER SUPPLY CIRCUIT FOR SHORT TO GROUND** | |
| | 1 Measure the resistance between the MAF sensor electrical connector PI14, pin 4 (U) and GROUND. |
| | Is the resistance less than 10,000 ohms?<br>**Yes**<br>REPAIR the short to GROUND. For additional information, refer to the wiring diagrams. CLEAR the DTCs. TEST the system for normal operation.<br>**No**<br>GO to O5. |
| **O5: CHECK THE IAT SENSOR GROUND CIRCUIT FOR SHORT TO BATTERY** | |
| | 1 Connect the ECM electrical connector, PI01. |
| | 2 Turn the ignition switch to the ON position. |
| | 3 Check for voltage at PI14, pin 5 (BG) |
| | Is the voltage greater than 1 volt?<br>**Yes**<br>REPAIR the short circuit. For additional information, refer to the wiring diagrams. CLEAR the DTCs. TEST the system for normal operation.<br>**No**<br>INSTALL a new MAF sensor.<br>REFER to: Mass Air Flow (MAF) Sensor (303-14B Electronic Engine Controls - V8 4.2L Petrol/V8 S/C 4.2L Petrol, Removal and Installation).<br>CLEAR DTCs. TEST the system for normal operation. If the DTC is repeated, INSTALL a new ECM.<br>REFER to: Engine Control Module (ECM) (303-14A Electronic Engine Controls - 2.5L NA V6 - AJV6/3.0L NA V6 - AJ27, Removal and Installation).<br>Before replacing an ECM, contact dealer technical support. |

**PINPOINT TEST P : DTC P0051, P0052. BANK 2 HO2S HEATER.**

GETtheMANUALS.org

| TEST CONDITIONS | DETAILS/RESULTS/ACTIONS |
|---|---|
| **P1: CHECK THE POWER SUPPLY CIRCUIT TO THE BANK 2 HO2S HEATER** | |
| | 1 Disconnect the HO2S electrical connector, PI12. |
| | 2 Turn the ignition switch to the ON position. |
| | 3 Measure the voltage between PI12, pin 1 (WR) and GROUND. |
| | Is the voltage less than 10 volts?<br>**Yes**<br>GO to P6.<br>(This circuit includes the power distribution fuse box and the EMS relay.)<br>**No**<br>GO to P2. |
| **P2: CHECK THE BANK 2 HO2S HEATER GROUND CIRCUIT FOR OPEN CIRCUIT** | |
| | 1 Turn the ignition switch to the OFF position. |
| | 2 Disconnect the ECM electrical connector PI01. |
| | 3 Measure the resistance between the LH bank HO2S electrical connector PI12, pin 2 (RW) and the ECM electrical connector PI01, pins 55 and pin 56 (RW). |
| | Is the resistance of each wire less than 5 ohms?<br>**Yes**<br>GO to P3.<br>**No**<br>REPAIR the circuit. For additional information, refer to the wiring diagrams. CLEAR the DTCs. TEST the system for normal operation. |
| **P3: CHECK THE BANK 2 HO2S HEATER RESISTANCE** | |
| | 1 Measure the resistance between pins 1 and 2 of the bank 2 H02S. |
| | Is the resistance 3.3 ohms?<br>**Yes**<br>GO to P4.<br>**No**<br>INSTALL a new bank 2 H02S.<br>REFER to: Heated Oxygen Sensor (HO2S) (303-14B Electronic Engine Controls - V8 4.2L Petrol/V8 S/C 4.2L Petrol, Removal and Installation).<br>CLEAR the DTCs. TEST the system for normal operation. |
| **P4: CHECK THE BANK 2 HO2S HEATER CIRCUIT FOR SHORT TO GROUND** | |
| | 1 Measure the resistance between the LH bank HO2S electrical connector PI12, pin 2 (RW) and GROUND. |
| | Is the resistance less than 10,000 ohms?<br>**Yes**<br>REPAIR the short to GROUND. For additional information, refer to the wiring diagrams. CLEAR the DTCs. TEST the system for normal operation.<br>**No**<br>GO to P5. |
| **P5: CHECK THE BANK 2 HO2S HEATER CIRCUIT FOR SHORT TO BATTERY** | |
| | 1 Connect the ECM electrical connector, PI01. |
| | 2 Turn the ignition switch to the OFF position. |
| | 3 Check for a voltage at PI12, pin 2 (RW) |
| | Is the voltage greater than 1 volt?<br>**Yes**<br>REPAIR the short to battery. For additional information, refer to the wiring diagrams. CLEAR the DTCs. TEST the system for normal operation.<br>**No**<br>GO to P6. |
| **P6: CHECK FUSE 35 OF THE FRONT POWER DISTRIBUTION BOX** | |
| | 1 Check the fuse. |
| | Is the fuse OK?<br>**Yes**<br>GO to P8.<br>**No**<br>GO to P7. |
| **P7: CHECK FUSE 35 OF THE FRONT POWER DISTRIBUTION BOX FOR A SHORT TO GROUND** | |
| | 1 Measure the resistance between electrical connector FH32, pin 41 of the front power distribution box and GROUND. |
| | Is the resistance less than 10,000 ohms?<br>**Yes**<br>REPAIR short to ground between the engine compartment fuse box and the LH bank HO2S. CLEAR the DTC. TEST the system for normal operation.<br>**No**<br>INSTALL a new fuse. CLEAR the DTC. TEST the system for normal operation. |
| **P8: CHECK THE POWER SUPPLY TO FUSE 35 OF THE FRONT POWER DISTRIBUTION BOX FOR A SHORT TO GROUND** | |
| | 1 Measure the voltage between fuse 42 electrical connector FH32, pin 47 and GROUND. |
| | Is the voltage less than 10 volts?<br>**Yes**<br>Repair the circuit from the ECM control relay to the engine compartment fuse box. CLEAR the DTC. TEST the system for normal operation.<br>**No**<br>Repair the circuit from the compartment fuse box and the HO2S. CLEAR the DTC. TEST the system for normal operation. |

## PINPOINT TEST Q : DTC P1606. ECM RELAY.

| TEST CONDITIONS | DETAILS/RESULTS/ACTIONS |
|---|---|
| **Q1: CHECK THE ECM CONTROL RELAY** | |
| | 1 Turn the ignition switch to the ON position. |
| | Does the ECM relay make an audible click?<br>**Yes**<br>GO to Q2.<br>**No**<br>GO to Q3. |
| **Q2: CHECK FOR POWER SUPPLY FROM THE ECM CONTROL RELAY** | |

GETtheMANUALS.org

| | |
|---|---|
| | 1 Measure the voltage between the ECM control relay FH32, pin E05 and GROUND. |
| | Is the voltage less than 10 volts?<br>**Yes**<br>GO to Q3.<br>**No**<br>REPAIR the circuit from the ECM control relay to the ECM. CLEAR the DTC. TEST the system for normal operation. |
| **Q3: CHECK FUSE 9 IN THE ENGINE COMPARTMENT FUSE BOX** | |
| | 1 Check the fuse. |
| | Is the fuse OK?<br>**Yes**<br>GO to Q4.<br>**No**<br>GO to Q8. |
| **Q4: CHECK THE POWER SUPPLY TO FUSE 9 IN THE ENGINE COMPARTMENT FUSE BOX** | |
| | 1 Measure the voltage between fuse 9 electrical connector FH32, pin 75 and GROUND. |
| | Is the voltage less than 10 volts?<br>**Yes**<br>Repair the circuit from the battery positive to the engine compartment fuse box. CLEAR the DTC. TEST the system for normal operation.<br>**No**<br>GO to Q5. |
| **Q5: CHECK THE POWER SUPPLY FROM FUSE 9 IN THE ENGINE COMPARTMENT FUSE BOX TO THE ECM CONTROL RELAY** | |
| | 1 Measure the voltage between the ECM control relay electrical connector FH32, pin 9 and GROUND. |
| | Is a the voltage less than 10 volts?<br>**Yes**<br>Repair the circuit from the engine compartment fuse box to the ECM control relay. CLEAR the DTC. TEST the system for normal operation.<br>**No**<br>INSTALL a new ECM control relay. CLEAR the DTC. TEST the system for normal operation. |
| **Q6: CHECK CONTINUITY OF THE ECM CONTROL RELAY GROUND CIRCUIT** | |
| | 1 Disconnect the ECM electrical connector PI01. |
| | 2 Remove the ECM control relay from the engine compartment fuse box. |
| | 3 Measure the resistance between the ECM electrical connector PI01, pin 40 and FH02, pin E02 of the engine compartment fuse box. |
| | Is the resistance less than 5 ohms?<br>**Yes**<br>GO to Q7.<br>**No**<br>REPAIR the circuit. For additional information, refer to wiring diagrams. CLEAR the DTC. TEST the system for normal operation.<br>(This circuit includes the power distribution fuse box and the EMS relay and diode.) |
| **Q7: CHECK CONTINUITY OF THE ECM CONTROL RELAY WINDING** | |
| | 1 Measure the resistance of the ECM control relay winding between pins 1 and 2 of the ECM control relay. |
| | Is the resistance less than 60 ohms?<br>**Yes**<br>INSTALL a new ECM control relay. CLEAR the DTC. TEST the system for normal operation.<br>**No**<br>GO to Q9. |
| **Q8: CHECK FUSE 9 OF THE ENGINE COMPARTMENT FUSE BOX FOR A SHORT TO GROUND** | |
| | 1 Measure the resistance between electrical connector FH32 pin 9 of the engine compartment fuse box and GROUND. |
| | Is the resistance less than 10,000 ohms?<br>**Yes**<br>REPAIR short to ground between the engine compartment fuse box and the ECM control relay. CLEAR the DTC. TEST the system for normal operation.<br>**No**<br>INSTALL a new fuse. CLEAR the DTC. TEST the system for normal operation. |
| **Q9: CHECK THE ECM CONTROL RELAY DIODE** | |
| | 1 Remove the ECM control relay diode from the engine compartment fuse box. |
| | 2 Measure the continuity of ECM control relay diode. |
| | Is the resistance less than 5 ohms?<br>**Yes**<br>Possible intermittent fault. Recheck DTCs.<br>**No**<br>INSTALL a new ECM control relay diode. Make sure that the ECM control relay diode is installed correctly. For additional information, refer to the wiring diagrams. CLEAR the DTC. TEST the system for normal operation. |

| **PINPOINT TEST R : P0105,P1107, P1108. MAP SENSOR.** | |
|---|---|
| **TEST CONDITIONS** | **DETAILS/RESULTS/ACTIONS** |
| **R1: CHECK THE GROUND CIRCUIT TO THE MAP SENSOR.** | |
| | 1 Measure the resistance between the MAP sensor electrical conector PI29, pin 4 (BG) and GROUND. |
| | Is the resistance less than 5 ohms?<br>**Yes**<br>GO to R2.<br>**No**<br>REPAIR the circuit between the MAP sensor and GROUND. For additional information, refer to wiring diagrams. CLEAR the DTC. TEST the system for normal operation. |
| **R2: CHECK THE POWER SUPPLY CIRCUIT TO THE MAP SENSOR.** | |
| | 1 Turn the ignition switch to the RUN position. |
| | 2 Measure the voltage between the MAP sensor electrical connector PI29, pin 2 (OY) and GROUND. |
| | Is the voltage greater than 5 volts?<br>**Yes**<br>GO to R3.<br>**No**<br>REPAIR the circuit between the MAP sensor electrical connector PI29 pin 2 (OY) and the the EMS 5v supply from the ECM. For additional information, refer to the wiring diagrams. CLEAR the DTC. TEST the system for normal operation. |
| **R3: CHECK CONTINUITY OF THE MAP SENSOR SIGNAL WIRE.** | |

GETtheMANUALS.com

| | |
|---|---|
| | 1 Measure the resistance of the circuit between MAP sensor electrical connector PI29, pin 1 (BK) and ECM electrical connector PI01, pin 127 (BK) |
| | Is the resistance less than 5 ohms?<br>**Yes**<br>GO to R4.<br>**No**<br>REPAIR the circuit between the MAP sensor electrical connector PI29, pin 1 (BK) and ECM electrical connector PI01, pin 127 (BK) For additional information, refer to the wiring diagrams. CLEAR the DTC. TEST the system for normal operation. |
| **R4: CHECK THE MAP SENSOR SIGNAL WIRE FOR SHORT TO GROUND** | |
| | 1 Disconnect the ECM electrical connector, PI01. |
| | 2 Disconnect the MAP sensor electrical connector, PI29. |
| | 3 Measure the resistance between PI29, pin 1 (BK) and GROUND. |
| | Is the resistance less than 10,000 ohms?<br>**Yes**<br>REPAIR the short to GROUND. For additional information, refer to the wiring diagrams. CLEAR the DTC. TEST the system for normal operation.<br>**No**<br>GO to R5. |
| **R5: CHECK THE MAP SENSOR SIGNAL WIRE FOR SHORT TO BATTERY** | |
| | 1 Connect the ECM electrical connector, PI01. |
| | 2 Turn the ignition switch to the ON position. |
| | 3 Check for a voltage at PI29, pin 1 (BK) |
| | Is the voltage greater than 1 volt?<br>**Yes**<br>Repair the short circuit. For additional information, refer to the wiring diagrams. CLEAR the DTC. TEST the system for normal operation.<br>**No**<br>INSTALL a new MAP sensor. CLEAR the DTC. TEST the system for normal operation. |

**PINPOINT TEST S : P0010, P1384. VVT BANK 1.**

| TEST CONDITIONS | DETAILS/RESULTS/ACTIONS |
|---|---|
| **S1: CHECK THE BANK 1 VVT SOLENOID RESISTANCE** | |
| | 1 Disconnect the bank 1 VVT solenoid electrical connector, PI16. |
| | 2 Measure the resistance between pins 1 and 2 of the bank 1 VVT solenoid. |
| | Is the resistance 8 ohms?<br>**Yes**<br>GO to S2.<br>**No**<br>INSTALL a new bank 1 VVT solenoid.<br>REFER to: Variable Camshaft Timing (VCT) Oil Control Solenoid (303-14B Electronic Engine Controls - V8 4.2L Petrol/V8 S/C 4.2L Petrol, Removal and Installation).<br>CLEAR the DTC. TEST the system for normal operation. |
| **S2: CHECK THE GROUND CIRCUIT TO THE BANK 1 VVT SOLENOID.** | |
| | 1 Disconnect the bank 1 VVT solenoid electrical connector, PI16. |
| | 2 Measure the resistance between the bank 1 VVT solenoid electrical connector PI16, pin 2 (B) and GROUND. |
| | Is the resistance less than 5 ohms?<br>**Yes**<br>GO to S3.<br>**No**<br>REPAIR the circuit between VVT solenoid electrical connector PI16, pin 2 (B) and GROUND. For additional information, refer to wiring diagrams. CLEAR the DTC. TEST the system for normal operation. |
| **S3: CHECK CONTINUITY OF THE VVT SOLENOID SIGNAL WIRE.** | |
| | 1 Measure the resistance between VVT solenoid electrical connector PI16 pin 1 (Y) and ECM electrical connector PI01 pin 109 (Y) |
| | Is the resistance less than 5 ohms?<br>**Yes**<br>GO to S4.<br>**No**<br>REPAIR the circuit between VVT solenoid electrical connector PI16, pin 1 (Y) and ECM electrical connector PI01 pin 109 (Y) For additional information, refer to wiring diagrams. CLEAR the DTC. TEST the system for normal operation. |
| **S4: CHECK FOR SHORT TO GROUND AT THE VVT SOLENOID SIGNAL WIRE** | |
| | 1 Disconnect the ECM electrical connector, PI01. |
| | 2 Measure the resistance between PI16, pin 1 (Y) and GROUND. |
| | Is the resistance less than 10,000 ohms?<br>**Yes**<br>REPAIR the short to GROUND. For additional information, refer to wiring diagrams. CLEAR the DTC. TEST the system for normal operation.<br>**No**<br>GO to S5. |
| **S5: CHECK FOR SHORT TO BATTERY AT THE VVT SOLENOID SIGNAL WIRE** | |
| | 1 TURN the ignition switch to the ON position. |
| | 2 Check for a voltage at PI16, pin 1 (Y) |
| | Is the voltage greater than 1 volt?<br>**Yes**<br>REPAIR the short circuit. For additional information, refer to wiring diagrams. CLEAR the DTC. TEST the system for normal operation.<br>**No**<br>GO to S6. |
| **S6: CHECK RESISTANCE OF THE VVT SOLENOID.** | |
| | 1 Check the resistance between pins 1 and 2 of the bank 1 VVT solenoid. |
| | Is the resistance 6.5 - 8.5 ohms?<br>**Yes**<br>INSTALL a new ECM.<br>REFER to: Engine Control Module (ECM) (303-14A Electronic Engine Controls - 2.5L NA V6 - AJV6/3.0L NA V6 - AJ27, Removal and Installation). |

GETtheMANUALS.org

| | |
|---|---|
| | Before replacing an ECM, contact dealer technical support. CLEAR the DTC. TEST the system for normal operation.<br>**No**<br>INSTALL a new bank 1 VVT solenoid.<br>REFER to: Variable Camshaft Timing (VCT) Oil Control Solenoid (303-14B Electronic Engine Controls - V8 4.2L Petrol/V8 S/C 4.2L Petrol, Removal and Installation).<br>CLEAR the DTC. TEST the system for normal operation. |

| PINPOINT TEST T : P0020, P1396. VVT BANK 2. | |
|---|---|
| **TEST CONDITIONS** | **DETAILS/RESULTS/ACTIONS** |
| **T1: CHECK THE BANK 2 VVT SOLENOID RESISTANCE** | |
| | 1 Disconnect the bank 2 VVT solenoid electrical connector, PI17. |
| | 2 Measure the resistance between pins 1 and 2 of the bank 2 VVT solenoid. |
| | Is the resistance 8 ohms?<br>**Yes**<br>GO to T2.<br>**No**<br>INSTALL a new bank 2 VVT solenoid.<br>REFER to: Variable Camshaft Timing (VCT) Oil Control Solenoid (303-14B Electronic Engine Controls - V8 4.2L Petrol/V8 S/C 4.2L Petrol, Removal and Installation).<br>CLEAR the DTC. TEST the system for normal operation. |
| **T2: CHECK GROUND CIRCUIT TO THE BANK 2 VVT SOLENOID.** | |
| | 1 Disconnect the bank2 VVT solenoid electrical connector, PI17. |
| | 2 Measure the resistance between the bank 1 VVT solenoid electrical connector PI17, pin 2 (B) and GROUND. |
| | Is the resistance less than 5 ohms?<br>**Yes**<br>GO to T3.<br>**No**<br>REPAIR the circuit between VVT solenoid electrical connector PI17, pin 2 (B) and GROUND. For additional information, refer to the wiring diagrams. CLEAR the DTC. TEST the system for normal operation. |
| **T3: CHECK CONTINUITY OF THE BANK 2 VVT SOLENOID SIGNAL WIRE.** | |
| | 1 Measure the resistance between VVT solenoid electrical connector PI17, pin 1 (YU) and ECM electrical connector PI01, pin 110 (YU) |
| | Is the resistance less than 5 ohms?<br>**Yes**<br>GO to T4.<br>**No**<br>REPAIR the circuit between VVT solenoid electrical connector PI17 pin 1 (YU) and ECM electrical connector PI01 pin 110 (YU) For additional information, refer to the wiring diagrams. CLEAR the DTC. TEST the system for normal operation. |
| **T4: CHECK FOR SHORT TO GROUND AT THE BANK 2 VVT SOLENOID SIGNAL WIRE** | |
| | 1 Disconnect the ECM electrical connector, PI01. |
| | 2 Measure the resistance between PI17, pin 1 (YU) and GROUND. |
| | Is the resistance less than 10,000 ohms?<br>**Yes**<br>REPAIR the short to GROUND. For additional information, refer to the wiring diagrams. CLEAR the DTC. TEST the system for normal operation.<br>**No**<br>GO to T5. |
| **T5: CHECK FOR SHORT TO BATTERY AT THE BANK 2 VVT SOLENOID SIGNAL WIRE** | |
| | 1 TURN the ignition switch to the ON position. |
| | 2 Check for a voltage at PI17, pin 1 (YU) |
| | Is the voltage greater than 1 volt?<br>**Yes**<br>REPAIR the short circuit. For additional information, refer to the wiring diagrams. CLEAR the DTC. TEST the system for normal operation.<br>**No**<br>GO to T6. |
| **T6: CHECK RESISTANCE OF THE BANK 2 VVT SOLENOID.** | |
| | 1 Check the resistance between pins 1 and 2 of the bank 2 VVT solenoid. |
| | Is the resistance 6.5 - 8.5 ohms?<br>**Yes**<br>INSTALL a new ECM.<br>REFER to: Engine Control Module (ECM) (303-14A Electronic Engine Controls - 2.5L NA V6 - AJV6/3.0L NA V6 - AJ27, Removal and Installation).<br>Before replacing an ECM, contact dealer technical support.<br>**No**<br>INSTALL a new bank 2 VVT solenoid.<br>REFER to: Variable Camshaft Timing (VCT) Oil Control Solenoid (303-14B Electronic Engine Controls - V8 4.2L Petrol/V8 S/C 4.2L Petrol, Removal and Installation).<br>CLEAR the DTC. TEST the system for normal operation. |

| PINPOINT TEST U : P0532, AIR CONDITIONING REFRIGERANT PRESSURE SENSOR CIRCUIT LOW INPUT | |
|---|---|
| **TEST CONDITIONS** | **DETAILS/RESULTS/ACTIONS** |
| **U1: CHECK THE REFRIGERANT PRESSURE SENSOR CIRCUIT FOR SHORT TO GROUND** | |
| | 1 Disconnect the refrigerant pressure sensor electrical connector, FH110. |
| | 2 Measure the resistance between FH110, pin 003 (WU) and GROUND. |
| | Is the resistance less than 10,000 ohms?<br>**Yes**<br>REPAIR the short to ground. For additional information, refer to wiring diagrams. CLEAR the DTC. TEST the system for normal operation.<br>**No**<br>GO to U2. |
| **U2: CHECK THE REFRIGERANT PRESSURE SENSOR CIRCUIT FOR OPEN CIRCUIT** | |
| | 1 Disconnect the ECM electrical connector, PI001. |

GETtheMANUALS.org

| | |
|---|---|
| | 2 Measure the resistance between PI001, pin 121 (G) and the refrigerant pressure sensor electrical connector, FH110, pin 003 (G). |
| | Is the resistance less than 5 ohms?<br>**Yes**<br>GO to Pinpoint Test X.<br>**No**<br>REPAIR the circuit. For additional information, refer to wiring digrams. CLEAR the DTC. TEST the system for normal operation |

| PINPOINT TEST V : P0533, AIR CONDITIONING REFRIGERANT PRESSURE SENSOR CIRCUIT HIGH INPUT | |
|---|---|
| **TEST CONDITIONS** | **DETAILS/RESULTS/ACTIONS** |
| **V1: CHECK THE REFRIGERANT PRESSURE SENSOR CIRCUIT FOR SHORT TO BATTERY** | |
| | 1 Turn the ignition switch to the OFF position. |
| | 2 Disconnect the refrigerant pressure sensor electrical connector, FH110. |
| | 3 Check for a voltage between FH110, pin 003 (WU) and GROUND. |
| | Is the voltage greater than 1 volt?<br>**Yes**<br>REPAIR the short to battery. For additional information, refer to wiring diagrams. CLEAR the DTC. TEST the system for nprmal operation.<br>**No**<br>GO to Pinpoint Test X. |

| PINPOINT TEST W : P1582. FLIGHT RECORDER DATA STORED. | |
|---|---|
| **TEST CONDITIONS** | **DETAILS/RESULTS/ACTIONS** |
| **W1: EXTRACT THE FLIGHT RECORDER DATA.** | |
| | • NOTE: Flight recorder data can only be extracted using the Jaguar approved diagnostic system, where available.<br>1 Connect the Jaguar approved diagnostic system, or code reader. |
| | Is DTC P1582 stored?<br>**Yes**<br>Refer to dealer technical support for information on extracting data.<br>**No**<br>Test not applicable. |

| PINPOINT TEST X : P1240, P1241, P1242. SENSOR POWER SUPPLY. | |
|---|---|
| **TEST CONDITIONS** | **DETAILS/RESULTS/ACTIONS** |
| **X1: CHECK THE POWER SUPPLY CIRCUIT TO THE FUEL INJECTION PRESSURE SENSOR.** | |
| | 1 Disconnect the fuel injection pressure sensor electrical connector, PI28. |
| | 2 Turn the ignition switch to the ON position. |
| | 3 Measure the voltage between fuel injection pressure sensor electrical connector PI28, pin 1 (OY) and GROUND. |
| | Is the voltage greater than 4 volts?<br>**Yes**<br>GO to X2.<br>**No**<br>REPAIR the circuit between the fuel injection pressure sensor electrical connector PI28, pin 1 (OY) and the sensor 5 volt supply bus.<br>(The fault could be in any of the other sensors in this circuit, or in any of the spurs in this circuit. For additional information, refer to wiring diagrams.)<br>CLEAR the DTC. TEST the system for normal operation. |
| **X2: CHECK THE POWER SUPPLY CIRCUIT TO THE FUEL INJECTION PRESSURE SENSOR FOR SHORT TO BATTERY.** | |
| | 1 Measure the voltage between fuel injection pressure sensor electrical connector PI28, pin 1 (OY) and GROUND. |
| | Is the voltage greater than 6 volts?<br>**Yes**<br>REPAIR the circuit between the fuel injection pressure sensor electrical connector PI28, pin 1 (OY) and the sensor 5 volt supply bus.<br>(The short could be in any of the other sensors in this circuit, or in any of the spurs in this circuit. For additional information, refer to wiring diagrams.)<br>CLEAR the DTC. TEST the system for normal operation.<br>**No**<br>GO to X3. |
| **X3: CHECK THE POWER SUPPLY CIRCUIT TO THE MAP SENSOR.** | |
| | 1 Disconnect the MAP sensor electrical connector, PI29. |
| | 2 Turn the ignition switch to the ON position. |
| | 3 Measure the voltage between MAP Sensor electrical connector PI29, pin 2 (OY) and GROUND. |
| | Is the voltage greater than 4 volts?<br>**Yes**<br>GO to X4.<br>**No**<br>REPAIR the circuit between the MAP Sensor electrical connector PI29, pin 2(OY) and the sensor 5 volt supply bus.<br>(The fault could be in any of the other sensors in this circuit, or in any of the spurs in this circuit. For additional information, refer to wiring diagrams.)<br>CLEAR the DTC. TEST the system for normal operation. |
| **X4: CHECK THE POWER SUPPLY CIRCUIT TO THE MAP SENSOR FOR SHORT TO BATTERY.** | |
| | 1 Measure the voltage between MAP Sensor electrical connector PI29, pin 2 (OY) and GROUND. |
| | Is the voltage greater than 6 volts?<br>**Yes**<br>REPAIR the circuit between the MAP Sensor electrical connector PI29, pin 2(OY) and the sensor 5 volt supply bus.<br>(The short could be in any of the other sensors in this circuit, or in any of the spurs in this circuit. For additional information, refer to wiring diagrams.)<br>CLEAR the DTC. TEST the system for normal operation.<br>**No**<br>GO to X5. |

GETtheMANUALS.org

**X5: CHECK THE POWER SUPPLY CIRCUIT TO THE FTP SENSOR.**

• NOTE: Access to the FTP sensor involves the removal of the fuel tank. To reduce the amount of work necessary, a slave harness could be used. This can be connected at the access port beneath the rear seat. Tests can then be carried out via the slave harness and sensor. If system operation is normal with the slave harness and sensor, the fault lies in the vehicle's harness or sensor.

1. Disconnect the FTP sensor electrical connector, FP1. (see note above)
2. Turn the ignition switch to the ON position.
3. Measure the voltage between FTP Sensor electrical connector FP1, pin 3 (OY) and GROUND.

Is the voltage greater than 4 volts?

**Yes**

GO to X6.

**No**

REPAIR the circuit between the FTP Sensor electrical connector FP1, pin 3 (OY) and the sensor 5 volt supply bus.
(The fault could be in any of the other sensors in this circuit, or in any of the spurs in this circuit. For additional information, refer to wiring diagrams.)

CLEAR the DTC. TEST the system for normal operation.

**X6: CHECK THE POWER SUPPLY CIRCUIT TO THE FTP SENSOR FOR SHORT TO BATTERY.**

1. Measure the voltage between FTP Sensor electrical connector FP1, pin 3 (OY) and GROUND.

Is the voltage greater than 6 volts?

**Yes**

REPAIR the circuit between the FTP Sensor electrical connector FP1, pin 3 (OY) and the sensor 5 volt supply bus.
(The short could be in any of the other sensors in this circuit, or in any of the spurs in this circuit. For additional information, refer to wiring diagrams.)

CLEAR the DTC. TEST the system for normal operation.

**No**

GO to X7.

**X7: CHECK THE POWER SUPPLY CIRCUIT TO THE ACCELERATOR PEDAL POSITION SENSOR.**

1. Disconnect the APP sensor electrical connector.
2. Turn the ignition switch to the ON position.
3. Measure the voltage between APP Sensor electrical connector CA88, pin 2 (OY) and GROUND.

Is the voltage greater than 4 volts?

**Yes**

GO to X8.

**No**

REPAIR the circuit between the APP Sensor electrical connector CA88, pin 2 (OY) and the sensor 5 volt supply bus.
(The fault could be in any of the other sensors in this circuit, or in any of the spurs in this circuit. For additional information, refer to wiring diagrams.)

CLEAR the DTC. TEST the system for normal operation.

**X8: CHECK THE POWER SUPPLY CIRCUIT TO THE ACCELERATOR PEDAL POSITION SENSOR FOR SHORT TO BATTERY.**

1. Measure the voltage between APP Sensor electrical connector CA88, pin 2 (OY) and GROUND.

Is the voltage greater than 6 volts?

**Yes**

REPAIR the circuit between the APP Sensor electrical connector CA88, pin 2 (OY) and the sensor 5 volt supply bus.
(The short could be in any of the other sensors in this circuit, or in any of the spurs in this circuit. For additional information, refer to wiring diagrams.)

CLEAR the DTC. TEST the system for normal operation.

**No**

GO to X9.

**X9: CHECK THE POWER SUPPLY CIRCUIT TO THE THROTTLE POSITION SENSOR.**

1. Turn the ignition switch to the ON position.
2. Measure the voltage between TP Sensor electrical connectorPI26 PI26, pin 2 (OY) and GROUND.

Is the voltage greater than 4 volts?

**Yes**

GO to X10.

**No**

REPAIR the circuit between the TP Sensor electrical connector PI26, pin 2 (OY) and the sensor 5 volt supply bus.
(The fault could be in any of the other sensors in this circuit, or in any of the spurs in this circuit. For additional information, refer to wiring diagrams.)

CLEAR the DTC. TEST the system for normal operation.

**X10: CHECK THE POWER SUPPLY CIRCUIT TO THE THROTTLE POSITION SENSOR FOR SHORT TO BATTERY.**

1. Measure the voltage between TP Sensor electrical connector PI26, pin 2 (OY) and GROUND.

Is the voltage greater than 6 volts?

**Yes**

REPAIR the circuit between the TP Sensor electrical connector PI26, pin 2 (OY) and the sensor 5 volt supply bus.
(The short could be in any of the other sensors in this circuit, or in any of the spurs in this circuit. For additional information, refer to wiring diagrams.)

CLEAR the DTC. TEST the system for normal operation.

**No**

GO to X11.

**X11: CHECK THE POWER SUPPLY CIRCUIT TO THE AIR CONDITIONING PRESSURE SENSOR.**

1. Turn the ignition switch to the ON position.
2. Measure the voltage between ACP sensor electrical connector, FH110, pin 2 (OY) and GROUND.

Is the voltage greater than 4 volts?

**Yes**

GO to X12.

**No**

REPAIR the circuit between the ACP sensor electrical connector, FH110, pin 2 (OY) and the sensor 5 volt supply bus.
(The fault could be in any of the other sensors in this circuit, or in any of the spurs in this circuit. For additional information, refer to wiring diagrams.)

GETtheMANUALS.org

CLEAR the DTC. TEST the system for normal operation.

**X12: CHECK THE POWER SUPPLY CIRCUIT TO THE AIR CONDITIONING PRESSURE SENSOR FOR SHORT TO BATTERY.**

| | |
|---|---|
| | 1 Measure the voltage between ACP sensor electrical connector, FH110, pin 2 (OY) and GROUND. |
| | Is the voltage greater than 6 volts?<br>**Yes**<br>REPAIR the circuit between the ACP sensor electrical connector, FH110, pin 2 (OY) and the sensor 5 volt supply bus.<br>(The short could be in any of the other sensors in this circuit, or in any of the spurs in this circuit. For additional information, refer to wiring diagrams.)<br>CLEAR the DTC. TEST the system for normal operation.<br>**No**<br>No electrical fault in power supply circuit. Recheck DTCs, using the Jaguar approved diagnostic system, or code reader.<br>(This fault could also be a PSV failure within the ECM.) |

| **PINPOINT TEST Y : P1243. SENSOR GROUND CIRCUITS.** | |
|---|---|
| **TEST CONDITIONS** | **DETAILS/RESULTS/ACTIONS** |
| **Y1: CHECK THE GROUND CIRCUIT TO THE ENGINE COOLANT TEMPERATURE SENSOR.** | |
| | 1 Measure the resistance between ECT Sensor electrical connector PI25, pin 1 (BG) and GROUND. |
| | Is the resistance less than 5 ohms?<br>**Yes**<br>GO to Y2.<br>**No**<br>REPAIR the circuit between the ECT Sensor electrical connector PI25, pin 1 (BG) and GROUND.<br>(This circuit includes the ECM. For additional information, refer to wiring diagrams.)<br>CLEAR the DTC. TEST the system for normal operation. |
| **Y2: CHECK THE GROUND CIRCUIT TO THE ENGINE OIL TEMPERATURE SENSOR.** | |
| | 1 Measure the resistance between EOT Sensor electrical connector PI24, pin 2 (BG) and GROUND. |
| | Is the resistance less than 5 ohms?<br>**Yes**<br>GO to Y3.<br>**No**<br>REPAIR the circuit between the EOT Sensor electrical connector PI24, pin 2 (BG) and GROUND.<br>(This circuit includes the ECM. For additional information, refer to wiring diagrams.)<br>CLEAR the DTC. TEST the system for normal operation. |
| **Y3: CHECK THE GROUND CIRCUIT TO THE FUEL INJECTION PRESSURE SENSOR.** | |
| | 1 Measure the resistance between IP Sensor electrical connector PI28, pin 2 (BG) and GROUND. |
| | Is the resistance less than 5 ohms?<br>**Yes**<br>GO to Y4.<br>**No**<br>REPAIR the circuit between the IP Sensor electrical connector PI28, pin 2 (BG) and GROUND.<br>(This circuit includes the ECM. For additional information, refer to wiring diagrams.)<br>CLEAR the DTC. TEST the system for normal operation. |
| **Y4: CHECK THE GROUND CIRCUIT TO THE ENGINE FUEL TEMPERATURE SENSOR.** | |
| | 1 Measure the resistance between EFT Sensor electrical connector PI27, pin 1 (BG) and GROUND. |
| | Is the resistance less than 5 ohms?<br>**Yes**<br>GO to Y5.<br>**No**<br>REPAIR the circuit between the EFT Sensor electrical connector PI27, pin 1 (BG) and GROUND.<br>(This circuit includes the ECM. For additional information, refer to wiring diagrams.)<br>CLEAR the DTC. TEST the system for normal operation. |
| **Y5: CHECK THE GROUND CIRCUIT TO THE MAP SENSOR.** | |
| | 1 Measure the resistance between MAP Sensor electrical connector PI29, pin 4 (BG) and GROUND. |
| | Is the resistance less than 5 ohms?<br>**Yes**<br>GO to Y6.<br>**No**<br>REPAIR the circuit between the MAP Sensor electrical connector PI29, pin 4 (BG) and GROUND.<br>(This circuit includes the ECM. For additional information, refer to wiring diagrams.)<br>CLEAR the DTC. TEST the system for normal operation. |
| **Y6: CHECK THE GROUND CIRCUIT TO THE FTP SENSOR.** | |
| • NOTE: Access to the FTP sensor involves the removal of the fuel tank. To reduce the amount of work necessary, a slave harness could be used. This can be connected at the access port beneath the rear seat. Tests can then be carried out via the slave harness and sensor. If system operation is normal with the slave harness and sensor, the fault lies in the vehicle's harness or sensor. | |
| | 1 Measure the resistance between FTP Sensor electrical connector FP01, pin 2 (BG) and GROUND. |
| | Is the resistance less than 5 ohms?<br>**Yes**<br>GO to Y7.<br>**No**<br>REPAIR the circuit between the FTP Sensor electrical connector FP01, pin 2 (BG) and GROUND.<br>(This circuit includes the ECM. For additional information, refer to wiring diagrams.)<br>CLEAR the DTC. TEST the system for normal operation. |
| **Y7: CHECK THE GROUND CIRCUIT TO THE ACCELERATOR PEDAL POSITION SENSOR. (TRACK 1)** | |
| | 1 Measure the resistance between APP Sensor electrical connector CA88, pin 6 (BG) and GROUND. |
| | Is the resistance less than 5 ohms?<br>**Yes**<br>GO to Y8.<br>**No**<br>REPAIR the circuit between the APP Sensor electrical connector CA88, pin 6 (BG) and GROUND.<br>(This circuit includes the ECM. For additional information, refer to wiring diagrams.)<br>CLEAR the DTC. TEST the system for normal operation. |
| **Y8: CHECK THE GROUND CIRCUIT TO THE THROTTLE POSITION SENSOR.** | |
| | 1 Measure the resistance between TP Sensor electrical connector PI26, pin 1 (BG) and GROUND. |

GETtheMANUALS.org

| | |
|---|---|
| | Is the resistance less than 5 ohms?<br>**Yes**<br>GO to Y9.<br>**No**<br>REPAIR the circuit between the TP Sensor electrical connector PI26, pin 1 (BG) and GROUND.<br>(This circuit includes the ECM. For additional information, refer to wiring diagrams.)<br>CLEAR the DTC. TEST the system for normal operation. |
| **Y9: CHECK THE GROUND CIRCUIT TO THE ACCELERATOR PEDAL POSITION SENSOR. (TRACK 3)** | |
| | 1 Measure the resistance between APP Sensor electrical connector CA88, pin 3 (BG) and GROUND. |
| | Is the resistance less than 5 ohms?<br>**Yes**<br>GO to Y10.<br>**No**<br>REPAIR the circuit between the APP Sensor electrical connector CA88, pin 3 (BG) and GROUND.<br>(This circuit includes the ECM. For additional information, refer to wiring diagrams.)<br>CLEAR the DTC. TEST the system for normal operation. |
| **Y10: CHECK THE GROUND CIRCUIT TO THE AIR CONDITIONING PRESSURE SENSOR.** | |
| | 1 Measure the resistance between ACP sensor electrical connector, FH110, pin 1 (BG) and GROUND. |
| | Is the resistance less than 5 ohms?<br>**Yes**<br>No electrical fault in ground circuit. Recheck DTCs.<br>**No**<br>REPAIR the circuit between the ACP sensor electrical connector, FH110, pin 1 (BG) and GROUND.<br>(This circuit includes the ECM. For additional information, refer to wiring diagrams.)<br>CLEAR the DTC. TEST the system for normal operation. |

| **PINPOINT TEST Z : P0480. RADIATOR COOLING FAN MODULE DRIVE.** | |
|---|---|
| **TEST CONDITIONS** | **DETAILS/RESULTS/ACTIONS** |
| **Z1: CHECK THE PULSE WIDTH MODULATED SIGNAL TO THE COOLING FAN MODULE.** | |
| | 1 Disconnect the radiator cooling fan module electrical connector, FH108. |
| | 2 Run the engine to a temperature at which the cooling fans would operate. |
| | 3 Using a suitable meter, test for a pulse width modulated signal at FH108, pin 1 (WU) |
| | Is a PWM signal present?<br>**Yes**<br>INSTALL a new Cooling Fan Module.<br>REFER to: Cooling Module - Vehicles Without: Supercharger (303-03A Engine Cooling - V8 4.2L Petrol/V8 S/C 4.2L Petrol/2.5L NA V6 - AJV6/3.0L NA V6 - AJ27, Removal and Installation).<br>CLEAR the DTC. TEST the system for normal operation.<br>**No**<br>GO to Z2. |
| **Z2: CHECK CONTINUITY OF THE RADIATOR COOLING FAN MODULE SIGNAL WIRE.** | |
| | 1 Turn the ignition switch to the OFF position. |
| | 2 Disconnect the ECM electrical connector, PI01. |
| | 3 Measure the resistance between the Radiator Cooling Fan Module electrical connector FH108, pin 1 (WU) and the ECM electrical connector PI01, pin 1 (WU) |
| | Is the resistance less than 5 ohms?<br>**Yes**<br>INSTALL a new ECM.<br>REFER to: Engine Control Module (ECM) (303-14A Electronic Engine Controls - 2.5L NA V6 - AJV6/3.0L NA V6 - AJ27, Removal and Installation).<br>Before replacing an ECM, contact dealer technical support.<br>**No**<br>REPAIR the circuit between the Radiator Cooling Fan Module electrical connector FH108, pin 3 (WU) and the ECM electrical connector PI01, pin 51 (WU) For additional information, refer to wiring diagrams. CLEAR the DTC. TEST the system for normal operation. |

| **PINPOINT TEST AA : P0646, P0647. AIR CONDITIONING CLUTCH RELAY DRIVE.** | |
|---|---|
| **TEST CONDITIONS** | **DETAILS/RESULTS/ACTIONS** |
| **AA1: CHECK THE GROUND SUPPLY TO THE AIR CONDITIONING CLUTCH.** | |
| WARNING: This test involves working in proximity to rotating parts. Make sure due care is exercised. Failure to follow this instruction may result in personal injury. | |
| | 1 Turn the ignition switch to the ON position, |
| | 2 Disconnect the ECM electrical connector, PI01. |
| | 3 Disconnect the air conditioning clutch electrical connector, PI49. |
| | 4 Measure the resistance between PI49, pin 2, (B) and GROUND. |
| | Is the resistance less than 5 ohms?<br>**Yes**<br>REPAIR the circuit between PI49, pin 2, (B) and GROUND. For additional information, refer to wiring diagrams. CLEAR the DTC. TEST the system for normal operation.<br>**No**<br>GO to AA2. |
| **AA2: CHECK THE CIRCUIT INTEGRITY BETWEEN THE ECM AND THE AIR CONDITIONING CLUTCH.** | |
| | 1 Apply a GROUND to the disconnected ECM electrical connector, PI01, pin 34 (BG) |
| | 2 Measure the voltage at air conditioning clutch electrical connector, PI49, pin 1 (RG) |
| | Is the voltage greater than 10 volts?<br>**Yes**<br>GO to AA3.<br>**No**<br>GO to AA4. |
| **AA3: CHECK THE AIR CONDITIONING CLUTCH RELAY TO ECM CIRCUIT FOR SHORT TO GROUND.** | |
| | 1 Measure the resistance between PI01, pin 34 (BG) and GROUND. |

GETthemANUALS.org

| | |
|---|---|
| | Is the resistance less than 10,000 ohms?<br>**Yes**<br>GO to AA4.<br>**No**<br>INSTALL a new air conditioning compressor clutch relay. For additional information, refer to the electrical guide. CLEAR the DTC. TEST the system for normal operation. If the DTC is repeated, INSTALL a new ECM.<br>REFER to: Engine Control Module (ECM) (303-14A Electronic Engine Controls - 2.5L NA V6 - AJV6/3.0L NA V6 - AJ27, Removal and Installation).<br>Before replacing an ECM, contact dealer technical support. |
| **AA4: CHECK THE CIRCUIT BETWEEN THE AIR CONDITIONING COMPRESSOR CLUTCH AND THE RELAY FOR SHORT TO BATTERY.** | |
| | 1 Measure the voltage between PI49, pin 1 (RG) and GROUND. |
| | Is the voltage greater than 1 volt?<br>**Yes**<br>REPAIR the short circuit. For additional information, refer to wiring diagrams. CLEAR the DTC. TEST the system for normal operation.<br>**No**<br>GO to AA5. |
| **AA5: CHECK THE CIRCUIT BETWEEN THE AIR CONDITIONING COMPRESSOR CLUTCH AND THE ACCC RELAY FOR SHORT TO GROUND.** | |
| | 1 Measure the resistance between PI49, pin 1 (RG) and GROUND. |
| | Is the resistance less than 10,000 ohms?<br>**Yes**<br>REPAIR the short circuit. For additional information, refer to wiring diagrams. CLEAR the DTC. TEST the system for normal operation.<br>**No**<br>GO to AA6. |
| **AA6: CHECK THE CIRCUIT BETWEEN FUSE 32 OF THE FRONT POWER DISTRIBUTION FUSE BOX AND THE ACCC RELAY FOR SHORT TO GROUND.** | |
| | 1 Remove fuse 32. |
| | 2 Measure the resistance between fuse box electrical connector, FH32, pin 38 and GROUND. |
| | Is the resistance less than 10,000 ohms?<br>**Yes**<br>REPAIR the short circuit. For additional information, refer to wiring diagrams. CLEAR the DTC. TEST the system for normal operation.<br>**No**<br>GO to AA7. |
| **AA7: CHECK THE ACCC RELAY BASE FOR BATTERY VOLTAGE AT PIN 3.** | |
| | 1 Refit fuse 32. |
| | 2 Measure the voltage between the ACCC relay base, pin 3 and GROUND. |
| | Is the voltage greater than 10 volts?<br>**Yes**<br>GO to AA8.<br>**No**<br>Check/replace fuses. REPAIR the circuit between the relay base and the battery power bus 1. For additional information, refer to wiring diagrams. CLEAR the DTC. TEST the system for normal operation. |
| **AA8: CHECK THE CIRCUIT BETWEEN PIN 1 OF THE ACCC RELAY BASE AND THE POWER DISTRIBUTION FUSE BOX FOR SHORT TO GROUND.** | |
| | 1 Remove fuse 38. |
| | 2 Measure the resistance between the ACCC relay base, pin 1 and GROUND. |
| | Is the resistance less than 10,000 ohms?<br>**Yes**<br>REPAIR the short circuit. For additional information, refer to wiring diagrams. CLEAR the DTC. TEST the system for normal operation.<br>**No**<br>GO to AA9. |
| **AA9: CHECK THE ACCC RELAY BASE FOR BATTERY VOLTAGE AT PIN 1** | |
| | 1 Refit fuse 38. |
| | 2 Turn the ignition switch to the ON position. |
| | 3 Measure the voltage between ACCC relay base, pin 1, and GROUND. |
| | Is the voltage greater than 10 volts?<br>**Yes**<br>GO to AA10.<br>**No**<br>Check/replace fuses. REPAIR the circuit between the relay base and the battery power bus 2. For additional information, refer to wiring diagrams. CLEAR the DTC. TEST the system for normal operation.<br>(This circuit includes the EMS relay, and fuses 9.) |
| **AA10: CHECK THE CIRCUIT BETWEEN THE ECM AND THE ACCC RELAY BASE FOR CONTINUITY.** | |
| | 1 Remove the ACCC relay. |
| | 2 Measure the resistance between the ECM electrical connector, PI01, pin 34 (BG) and ACCC relay base, pin 2. |
| | Is the resistance less than 5 ohms?<br>**Yes**<br>GO to AA11.<br>**No**<br>REPAIR the circuit. For additional information, refer to wiring diagrams. CLEAR the DTC. TEST the system for normal operation. |
| **AA11: CHECK THE CIRCUIT BETWEEN THE ECM AND THE ACCC RELAY BASE FOR SHORT TO BATTERY.** | |
| | 1 Check for a voltage between the ECM electrical connector, PI01, pin 34 (BG) and GROUND. |
| | Is the voltage greater than 1 volt?<br>**Yes**<br>REPAIR the short circuit. For additional information, refer to wiring diagrams. CLEAR the DTC. TEST the system for normal operation.<br>**No**<br>GO to AA12. |
| **AA12: CHECK THE CIRCUIT BETWEEN THE ECM AND THE ACCC RELAY BASE FOR SHORT TO GROUND.** | |
| | 1 Measure the resistance between the ECM electrical connector, PI01, pin 34 (BG) and GROUND. |

GETtheMANUALS.org

| | |
|---|---|
| | Is the resistance less than 10,000 ohms?<br>**Yes**<br>REPAIR the short circuit. For additional information, refer to wiring diagrams. CLEAR the DTC. TEST the system for normal operation.<br>**No**<br>INSTALL a new ACCC relay. CLEAR the DTC. TEST the system for normal operation. |

| **PINPOINT TEST AB : P1516, P1517. P/N SWITCH STARTING/DRIVING MALFUNCTIONS.** | |
|---|---|
| **TEST CONDITIONS** | **DETAILS/RESULTS/ACTIONS** |
| **AB1: CHECK THE P/N INPUT TO THE ECM.** | |
| | 1 Select PARK. |
| | 2 Set the ignition switch to the ON position. |
| | 3 Measure the voltage at the ECM electrical connector PI01, pin 31 (B) |
| | Is the voltage greater than 10 volts?<br>**Yes**<br>INSTALL a new ECM.<br>REFER to: Engine Control Module (ECM) (303-14A Electronic Engine Controls - 2.5L NA V6 - AJV6/3.0L NA V6 - AJ27, Removal and Installation).<br>Before replacing an ECM, contact dealer technical support.<br>**No**<br>REPAIR the circuit between the ECM electrical connector PI01, pin 31 (B) and the ignition switch.<br>(On automatic transmission vehicles, this circuit includes the TR sensor, Central Junction Fuse Box, Ignition relay, and Inertia switch. On NAS manual transmission vehicles, this circuit also includes the Clutch Safety Switch.)<br>For additional information, refer to wiring diagrams. CLEAR the DTC. TEST the system for normal operation. |

| **PINPOINT TEST AC : P1245; P1246. IGNITION SWITCH CRANK SIGNAL** | |
|---|---|
| WARNING: Make sure the starter motor does not engage in the course of these tests. Failure to follow this instruction may result in personal injury. | |
| **TEST CONDITIONS** | **DETAILS/RESULTS/ACTIONS** |
| **AC1: CHECK THE START INPUT TO THE ECM** | |
| | 1 Move the gear selector to the N position. |
| | 2 Disconnect the ECM electrical connector, PI01. |
| | 3 Remove the starter relay from the power distribution fuse box. |
| | 4 Turn the ignition switch to the CRANK position. |
| | 5 Measure the voltage between PI01, pin 6, (Y) and GROUND. |
| | Is the voltage greater than 10 volts?<br>**Yes**<br>GO to AC2.<br>**No**<br>REPAIR the circuit between the ECM and the battery. For additional information, refer to wiring diagrams. CLEAR the DTC. TEST the system for normal operation.<br>(This circuit includes the ignition switch and the power distribution fuse box. (Fuse 28).) |
| **AC2: CHECK THE START INPUT TO THE STARTER RELAY** | |
| | 1 Turn the ignition switch to the START position and hold. |
| | 2 Measure the voltage between the starter relay base, (R20) pin 1, and GROUND. |
| | Is the voltage greater than 10 volts?<br>**Yes**<br>GO to AC3.<br>**No**<br>REPAIR the circuit between the Starter relay base and the battery. For additional information, refer to wiring diagrams. CLEAR the DTC. TEST the system for normal operation.<br>(This circuit includes the ignition switch and the power distribution fuse box.) |
| **AC3: CHECK THE START INPUT WIRE FOR SHORT TO BATTERY AT ECM** | |
| | 1 Turn the ignition switch to the ON position. |
| | 2 Measure the voltage between PI01, pin 6, (Y) and GROUND. |
| | Is the voltage greater than 10 volts?<br>**Yes**<br>REPAIR the short circuit. For additional information, refer to wiring diagrams. CLEAR the DTC. TEST the system for normal operation.<br>**No**<br>GO to AC4. |
| **AC4: CHECK THE START INPUT WIRE FOR SHORT TO BATTERY AT RELAY** | |
| | 1 Turn the ignition switch to the ON position. |
| | 2 Measure the voltage between the starter relay base, pin 1, and GROUND. |
| | Is the voltage greater than 10 volts?<br>**Yes**<br>REPAIR the short circuit. For additional information, refer to wiring diagrams. CLEAR the DTC. TEST the system for normal operation.<br>**No**<br>GO to AC5. |
| **AC5: CHECK THE STARTER RELAY INPUT FROM THE ECM FOR CONTINUITY.** | |
| | 1 Measure the resistance between PI01, pin 41 (GO) and relay base, pin 2. |
| | Is the resistance less than 5 ohms?<br>**Yes**<br>GO to AC6.<br>**No**<br>REPAIR the open circuit. For additional information, refer to wiring diagrams. CLEAR the DTC. TEST the system for normal operation. |
| **AC6: CHECK THE STARTER RELAY INPUT FROM THE ECM FOR SHORT TO GROUND.** | |
| | 1 Disconnect ignition switch electrical connector, FC18. |
| | 2 Measure the resistance between PI01, pin 41 (GO) and GROUND. |

GETtheMANUALS.org

| | |
|---|---|
| | Is the resistance less than 10,000 ohms?<br>**Yes**<br>REPAIR the short circuit. For additional information, refer to wiring diagrams. CLEAR the DTC. TEST the system for normal operation.<br>**No**<br>GO to AC7. |
| **AC7: CHECK THE STARTER RELAY INPUT FROM THE ECM FOR SHORT TO BATTERY.** | |
| | 1 Measure the voltage between the starter relay base, pin 2, and GROUND. |
| | Is the voltage greater than 1 volt?<br>**Yes**<br>REPAIR the short circuit. For additional information, refer to wiring diagrams. CLEAR the DTC. TEST the system for normal operation.<br>**No**<br>INSTALL a new starter relay. For additional information, refer to wiring diagrams. CLEAR the DTC. TEST the system for normal operation. If the DTC is repeated, INSTALL a new ECM.<br>REFER to: Engine Control Module (ECM) (303-14A Electronic Engine Controls - 2.5L NA V6 - AJV6/3.0L NA V6 - AJ27, Removal and Installation).<br>Before replacing an ECM, contact dealer technical support. |

## PINPOINT TEST AD : P0096,P0097, P0098 SUPERCHARGER INTAKE AIR TEMPERATURE SENSOR

| TEST CONDITIONS | DETAILS/RESULTS/ACTIONS |
|---|---|
| **AD1: CHECK THE SUPERCHARGER INTAKE AIR TEMPERATURE SENSOR SIGNAL WIRE FOR OPEN CIRCUIT** | |
| | 1 Turn the ignition switch to the OFF position. |
| | 2 Disconnect the supercharger IAT sensor electrical connector PI43. |
| | 3 Disconnect the ECM electrical connector PI01. |
| | 4 Measure the resistance between the oil temperature sensor electrical connector PI43, pin 1 (YU) and the ECM electrical connector PI01, pin 72 (YU). |
| | Is the resistance less than 5 ohms?<br>**Yes**<br>GO to AD2.<br>**No**<br>REPAIR the circuit. For additional information, refer to the wiring diagrams. CLEAR the DTCs. TEST the system for normal operation. |
| **AD2: CHECK THE SUPERCHARGER INTAKE AIR TEMPERATURE SENSOR GROUND CIRCUIT FOR OPEN CIRCUIT** | |
| | 1 Measure the resistance between the oil temperature sensor electrical connector PI43, pin 2 (BG) and GROUND. |
| | Is the resistance less than 5 ohms?<br>**Yes**<br>GO to AD3.<br>**No**<br>REPAIR the circuit. For additional information, refer to the wiring diagrams. CLEAR the DTCs. TEST the system for normal operation. |
| **AD3: CHECK THE SUPERCHARGER INTAKE AIR TEMPERATURE SENSOR GROUND CIRCUIT FOR SHORT TO BATTERY** | |
| | 1 Connect ECM electrical connector, PI01 |
| | 2 Turn the ignition switch to the RUN position. |
| | 3 Measure the voltage between the oil temperature sensor electrical connector PI43, pin 2 (BG) and GROUND. |
| | Is a voltage present?<br>**Yes**<br>REPAIR the short circuit. For additional information, refer to the wiring diagrams. CLEAR the DTCs. TEST the system for normal operation.<br>**No**<br>GO to AD4. |
| **AD4: CHECK THE SUPERCHARGER INTAKE AIR TEMPERATURE SENSOR CIRCUIT FOR A SHORT TO GROUND** | |
| | 1 Measure the resistance between the oil temperature sensor electrical connector PI43, pin 1 (YU) and GROUND. |
| | Is the resistance less than 10,000 ohms?<br>**Yes**<br>REPAIR the short to GROUND. For additional information, refer to the wiring diagrams. CLEAR the DTCs. TEST the system for normal operation.<br>**No**<br>GO to AD5. |
| **AD5: CHECK THE SUPERCHARGER INTAKE AIR TEMPERATURE SENSOR CIRCUIT FOR A SHORT TO BATTERY POSITIVE** | |
| | 1 Connect ECM electrical connector, PI01 |
| | 2 Turn the ignition switch to the ON position. |
| | 3 Measure the voltage between the oil temperature sensor electrical connector PI43, pin 1 (YU) and GROUND. |
| | Is the voltage greater than 10 volts?<br>**Yes**<br>REPAIR the short to battery positive. For additional information, refer to the wiring diagrams. CLEAR the DTCs. TEST the system for normal operation.<br>**No**<br>INSTALL a new oil temperature sensor.<br>REFER to: Intake Air Temperature (IAT) Sensor (303-14B Electronic Engine Controls - V8 4.2L Petrol/V8 S/C 4.2L Petrol, Removal and Installation).<br>CLEAR DTCs. TEST the system for normal operation. If the DTC is repeated, INSTALL a new ECM.<br>REFER to: Engine Control Module (ECM) (303-14A Electronic Engine Controls - 2.5L NA V6 - AJV6/3.0L NA V6 - AJ27, Removal and Installation).<br>Before replacing an ECM, contact dealer technical support. |

## PINPOINT TEST AE : P1410 SUPERCHARGER AIR CLEANER ADDITIONAL AIR INLET ACTUATOR

| TEST CONDITIONS | DETAILS/RESULTS/ACTIONS |
|---|---|
| **AE1: CHECK THE FUSE 37 IN THE FPDB** | |
| | 1 CHECK fuse 37 in the FPDB. |
| | Is the fuse OK?<br>**Yes**<br>GO to AE3.<br>**No**<br>GO to AE2. |

GETtheMANUALS.org

| | |
|---|---|
| **AE2: CHECK FOR A SHORT TO GROUND BETWEEN THE FPDB AND THE SUPERCHARGER AIR CLEANER ADDITIONAL AIR INLET ACTUATOR** | |
| | 1 DISCONNECT the supercharger air cleaner additional air inlet actuator electrical connector FH010. |
| | 2 MEASURE the resistance between supercharger air cleaner additional air inlet actuator electrical connector FH010 pin 1 (GU) and ground. |
| | Is the resistance less than 10,000 ohms?<br>**Yes**<br>Repair the circuit between supercharger air cleaner additional air inlet actuator electrical connector FH010 pin 1 (GU) and the FPDB. INSTALL a new fuse. CLEAR the DTC. TEST the system for normal operation<br>**No**<br>INSTALL a new fuse. CLEAR the DTC. TEST the system for normal operation. |
| **AE3: CHECK FOR BATTERY VOLTAGE AT THE SUPERCHARGER AIR CLEANER ADDITIONAL AIR INLET ACTUATOR** | |
| | 1 CHECK the voltage at supercharger air cleaner additional air inlet actuator electrical connector FH010 pin 1 (GU). |
| | Is the voltage less than 10 volts?<br>**Yes**<br>REPAIR the circuit. For additional information, refer to wiring diagrams. CLEAR the DTC. TEST the system for normal operation.<br>(This circuit includes the power distribution fuse box and the EMS relay.)<br>**No**<br>GO to AE4. |
| **AE4: CHECK THE CONTINUITY BETWEEN THE SUPERCHARGER AIR CLEANER ADDITIONAL AIR INLET ACTUATOR AND ECM** | |
| | 1 DISCONNECT the ECM electrical connector PI01. |
| | 2 MEASURE the resistance between the supercharger air cleaner additional air inlet actuator electrical connector FH010 pin 2 (U) and ECM electrical connector PI01 pin 14 (U). |
| | Is the resistance less than 5 ohms?<br>**Yes**<br>REPAIR the circuit. For additional information, refer to wiring diagrams. CLEAR the DTC. TEST the system for normal operation.<br>**No**<br>INSTALL a new supercharger air cleaner additional air inlet actuator. CLEAR the DTC. TEST the system for normal operation. If the DTC is repeated, INSTALL a new ECM.<br>REFER to: Engine Control Module (ECM) (303-14A Electronic Engine Controls - 2.5L NA V6 - AJV6/3.0L NA V6 - AJ27, Removal and Installation).<br>Before replacing an ECM, contact dealer technical support. |

GETtheMANUALS.org

# Electronic Engine Controls - V8 4.2L Petrol/V8 S/C 4.2L Petrol - Electronic Engine ControlsVIN Range: N52048->N80180

Diagnosis and Testing

## Overview

There are changes to the engine management system (EMS) for 2006 my, the most obvious of which will be the change to 7-digit diagnostic trouble codes (DTCs) from the familiar 5-digit, plus the addition of secondary air injection and changes to evaporative emissions and exhaust gas recirculation to comply with stage four emissions requirements.

For more information on these systems,
REFER to: Electronic Engine Controls (303-14B Electronic Engine Controls - V8 4.2L Petrol/V8 S/C 4.2L Petrol, Description and Operation) / Engine Emission Control - VIN Range: N52048->N99999 (303-08A Engine Emission Control - V8 4.2L Petrol/V8 S/C 4.2L Petrol/2.5L NA V6 - AJV6/3.0L NA V6 - AJ27, Description and Operation) / Evaporative Emissions - VIN Range: N52048->N99999 (303-13 Evaporative Emissions, Description and Operation).

## Inspection and Verification

1. **1.** Verify the customer concern.
2. **2.** Visually inspect for obvious signs of mechanical or electrical damage.

**Visual Inspection Chart**

| Mechanical | Electrical |
|---|---|
| • Engine oil level<br>• Cooling system coolant level<br>• Fuel level<br>• Fuel contamination/grade/quality<br>• Throttle body<br>• Poly-vee belt | • Fuses<br>• Wiring harness<br>• Electrical connector(s)<br>• Sensor(s)<br>• Engine control module (ECM)<br>• Transmission control module |

3. **3.** If an obvious cause for an observed or reported concern is found, correct the cause (if possible) before proceeding to the next step
4. **4.** If the cause is not visually evident, use the Jaguar approved diagnostic system or a scan tool to retrieve the fault codes before proceeding to the DTC Index, or the symptom chart if no DTCs are set.

## Symptom Chart

| Symptom (general) | Symptom (specific) | Possible source | Action |
|---|---|---|---|
| Non-Start | Engine does not crank | • Security system /Immobilizer engaged<br>• Engine in shut-down mode<br>• ECM relay<br>• Battery<br>• Park/Neutral switch<br>• Starting system<br>• Harness<br>• Engine seized | Check that the security system is disarmed. Check for DTCS.<br>For starting system,<br>REFER to: Starting System (303-06 Starting System, Diagnosis and Testing).<br>For ECM relay tests, GO to Pinpoint Test AE. For battery information,<br>REFER to: Battery (414-01 Battery, Mounting and Cables, Diagnosis and Testing).<br>For Park/Neutral tests,<br>REFER to: External Controls (307-05 Automatic Transmission/Transaxle External Controls, Diagnosis and Testing). |
| | Engine cranks, but does not fire | • Engine breather system disconnected/restricted<br>• Ignition system<br>• Fuel system<br>• Harness<br>• Crankshaft position (CKP) sensor<br>• ECM fault | Check the engine breather system,<br>REFER to: Engine Emission Control - VIN Range: N80181->R99999 (303-08A Engine Emission Control - V8 4.2L Petrol/V8 S/C 4.2L Petrol/2.5L NA V6 - AJV6/3.0L NA V6 - AJ27, Diagnosis and Testing).<br>For ignition system tests,<br>REFER to: Engine Ignition - VIN Range: N52048->N99999 (303-07B Engine Ignition - V8 4.2L Petrol/V8 S/C 4.2L Petrol, Diagnosis and Testing).<br>For fuel system tests,<br>REFER to: Fuel Charging and Controls - VIN Range: N52048->N99999 (303-04B Fuel Charging and Controls - V8 4.2L Petrol/V8 S/C 4.2L Petrol, Diagnosis and Testing).<br>For CKP tests, GO to Pinpoint Test R. Refer to the warranty policy and procedures manual if an ECM is suspect. |
| | Engine cranks and fires, but will not start | • Evaporative emissions purge valve<br>• Fuel pump<br>• Spark plugs<br>• Ignition coil failure(s)<br>• Harness | For purge valve tests,<br>REFER to: Evaporative Emissions - VIN Range: N52048->N99999 (303-13 Evaporative Emissions, Diagnosis and Testing).<br>For fuel system tests,<br>REFER to: Fuel Charging and Controls - VIN Range: N52048->N99999 (303-04B Fuel Charging and Controls - V8 4.2L Petrol/V8 S/C 4.2L Petrol, Diagnosis and Testing).<br>For ignition system tests,<br>REFER to: Engine Ignition - VIN Range: N52048->N99999 (303-07B Engine Ignition - V8 4.2L Petrol/V8 S/C 4.2L Petrol, Diagnosis and Testing). |
| Difficult to start | Difficult to start cold | • Check coolant anti-freeze content<br>• Battery<br>• CKP sensor<br>• Exhaust gas recirculation (EGR) valve stuck open<br>• Fuel pump<br>• Evaporative emissions | For battery information,<br>REFER to: Battery (414-01 Battery, Mounting and Cables, Diagnosis and Testing).<br>For CKP sensor tests, GO to Pinpoint Test R. For EGR system tests,<br>REFER to: Engine Emission Control - VIN Range: N80181->R99999 (303-08A Engine Emission Control - V8 4.2L Petrol/V8 S/C 4.2L Petrol/2.5L NA V6 - AJV6/3.0L NA V6 - |

GETtheMANUAL.org

| Symptom (general) | Symptom (specific) | Possible source | Action |
|---|---|---|---|
| | | purge valve | AJ27, Diagnosis and Testing).<br>For fuel system tests,<br>REFER to: Fuel Charging and Controls - VIN Range: N52048->N99999 (303-04B Fuel Charging and Controls - V8 4.2L Petrol/V8 S/C 4.2L Petrol, Diagnosis and Testing).<br>For purge valve tests,<br>REFER to: Evaporative Emissions - VIN Range: N52048->N99999 (303-13 Evaporative Emissions, Diagnosis and Testing). |
| | Difficult to start hot | • Injector leak<br>• Engine fuel temperature (EFT) sensor<br>• Intake air temperature (IAT) sensor<br>• Mass air flow (MAF) sensor<br>• Evaporative emissions purge valve<br>• Fuel pump<br>• Ignition system | For fuel system tests,<br>REFER to: Fuel Charging and Controls - VIN Range: N52048->N99999 (303-04B Fuel Charging and Controls - V8 4.2L Petrol/V8 S/C 4.2L Petrol, Diagnosis and Testing).<br>For EFT sensor tests, GO to Pinpoint Test AG. For IAT sensor tests, GO to Pinpoint Test C. For MAF sensor tests, GO to Pinpoint Test A. and GO to Pinpoint Test B. For purge valve tests,<br>REFER to: Evaporative Emissions - VIN Range: N52048->N99999 (303-13 Evaporative Emissions, Diagnosis and Testing). |
| | Difficult to start after hot soak (vehicle standing after engine has reached operating temperature) | • Injector leak<br>• EFT sensor<br>• IAT sensor<br>• MAF sensor<br>• Evaporative emissions purge valve<br>• Fuel pump<br>• Ignition system | For fuel system tests,<br>REFER to: Fuel Charging and Controls - VIN Range: N52048->N99999 (303-04B Fuel Charging and Controls - V8 4.2L Petrol/V8 S/C 4.2L Petrol, Diagnosis and Testing).<br>For EFT sensor tests, GO to Pinpoint Test AG. For IAT sensor tests, GO to Pinpoint Test C. For MAF sensor tests, GO to Pinpoint Test A. and GO to Pinpoint Test B. For purge valve tests,<br>REFER to: Evaporative Emissions - VIN Range: N52048->N99999 (303-13 Evaporative Emissions, Diagnosis and Testing). |
| | Engine cranks too fast/slow | • Compressions high/low<br>• Battery<br>• Starting system | Check compressions,<br>REFER to: Engine - V8 4.2L Petrol/V8 S/C 4.2L Petrol/2.5L NA V6 - AJV6/3.0L NA V6 - AJ27 (303-00 Engine System - General Information, Diagnosis and Testing).<br>For battery information,<br>REFER to: Battery (414-01 Battery, Mounting and Cables, Diagnosis and Testing).<br>For starting system tests,<br>REFER to: Starting System (303-06 Starting System, Diagnosis and Testing). |
| Engine stalls | Engine stalls soon after start | • Breather system disconnected/restricted<br>• ECM relay<br>• MAF sensor<br>• Ignition system<br>• Air filter restricted<br>• Fuel lines<br>• Fuel rail pressure (FRP) sensor<br>• Air leakage | Check the engine breather system,<br>REFER to: Engine Emission Control - VIN Range: N80181->R99999 (303-08A Engine Emission Control - V8 4.2L Petrol/V8 S/C 4.2L Petrol/2.5L NA V6 - AJV6/3.0L NA V6 - AJ27, Diagnosis and Testing).<br>For ECM relay tests, GO to Pinpoint Test AE. For MAF sensor tests, GO to Pinpoint Test A. and GO to Pinpoint Test B. For ignition system tests,<br>REFER to: Engine Ignition - VIN Range: N52048->N99999 (303-07B Engine Ignition - V8 4.2L Petrol/V8 S/C 4.2L Petrol, Diagnosis and Testing).<br>For air filter information,<br>REFER to: Intake Air Distribution and Filtering - VIN Range: N52048->N99999 (303-12B Intake Air Distribution and Filtering - V8 4.2L Petrol/V8 S/C 4.2L Petrol, Diagnosis and Testing).<br>For fuel system,<br>REFER to: Fuel Charging and Controls - VIN Range: N52048->N99999 (303-04B Fuel Charging and Controls - V8 4.2L Petrol/V8 S/C 4.2L Petrol, Diagnosis and Testing).<br>For FRP sensor tests, GO to Pinpoint Test AL. and GO to Pinpoint Test Z. For intake system information,<br>REFER to: Intake Air Distribution and Filtering - VIN Range: N52048->N99999 (303-12B Intake Air Distribution and Filtering - V8 4.2L Petrol/V8 S/C 4.2L Petrol, Diagnosis and Testing). |
| | Engine stalls on overrun | • ECM relay<br>• Throttle position (TP) sensors | For ECM relay tests, GO to Pinpoint Test AE. For TP sensor tests, GO to Pinpoint Test E. and GO to Pinpoint Test F. For fuel system tests,<br>REFER to: Fuel Charging and Controls - VIN Range: N52048->N99999 (303-04B Fuel Charging and Controls - V8 4.2L Petrol/V8 S/C 4.2L Petrol, Diagnosis and Testing). |
| | Engine stalls at steady speed | • ECM relay<br>• CKP sensor<br>• TP sensors | For ECM relay tests, GO to Pinpoint Test AE. For fuel system,<br>REFER to: Fuel Charging and Controls - VIN Range: N52048->N99999 (303-04B Fuel Charging and Controls - V8 4.2L Petrol/V8 S/C 4.2L Petrol, Diagnosis and Testing).<br>For CKP sensor tests, GO to Pinpoint Test R. For TP sensor tests, GO to Pinpoint Test E. and GO to Pinpoint Test F. |
| | Engine stalls with speed control enabled | • ECM relay | For ECM relay tests, GO to Pinpoint Test AE. |
| | Engine stalls when maneuvering | • ECM relay<br>• TP sensors<br>• Additional engine loads (PAS, air conditioning, etc)<br>• Transmission malfunction<br>• CAN malfunction | For ECM relay tests, GO to Pinpoint Test AE. For TP sensor tests, GO to Pinpoint Test E. and GO to Pinpoint Test F. For accessory drive information,<br>REFER to: Accessory Drive Belt - 4.2L (303-05, Removal and Installation).<br>For transmission information,<br>REFER to: Diagnostic Strategy - VIN Range: N52048->N99999 (307-01 Automatic Transmission/Transaxle, Diagnosis and Testing). |

GETtheMANUAL.org

| Symptom (general) | Symptom (specific) | Possible source | Action |
|---|---|---|---|
| | | | For CAN network tests,<br>REFER to: Communications Network - VIN Range: N52048->N99999 (418-00 Module Communications Network, Diagnosis and Testing). |
| Poor driveability | Engine hesitates/poor acceleration | • Fuel pump<br>• Fuel lines<br>• Injector leak<br>• Fuel pressure<br>• Air leakage<br>• TP sensors<br>• Throttle motor<br>• Ignition system<br>• EGR valve stuck<br>• HO2 sensors<br>• Transmission malfunction<br>• Restricted pedal travel (carpet, etc)<br>• Accelerator pedal position (APP) sensor | For fuel pump and fuel line tests,<br>REFER to: Fuel Tank and Lines - V8 4.2L Petrol/V8 S/C 4.2L Petrol/2.5L NA V6 - AJV6/3.0L NA V6 - AJ27, VIN Range: N80181->R99999 (310-01 Fuel Tank and Lines, Diagnosis and Testing).<br>For injector tests,<br>REFER to: Fuel Charging and Controls - VIN Range: N52048->N99999 (303-04B Fuel Charging and Controls - V8 4.2L Petrol/V8 S/C 4.2L Petrol, Diagnosis and Testing).<br>For intake system,<br>REFER to: Intake Air Distribution and Filtering - VIN Range: N52048->N99999 (303-12B Intake Air Distribution and Filtering - V8 4.2L Petrol/V8 S/C 4.2L Petrol, Diagnosis and Testing).<br>For TP sensor tests, GO to Pinpoint Test E. and GO to Pinpoint Test F. For throttle motor tests, GO to Pinpoint Test Y. For ignition system tests,<br>REFER to: Engine Ignition - VIN Range: N52048->N99999 (303-07B Engine Ignition - V8 4.2L Petrol/V8 S/C 4.2L Petrol, Diagnosis and Testing).<br>For EGR tests,<br>REFER to: Engine Emission Control - VIN Range: N80181->R99999 (303-08A Engine Emission Control - V8 4.2L Petrol/V8 S/C 4.2L Petrol/2.5L NA V6 - AJV6/3.0L NA V6 - AJ27, Diagnosis and Testing).<br>Check for DTCs relating to HO2 sensors, refer to the DTC index. For transmission information,<br>REFER to: Diagnostic Strategy - VIN Range: N52048->N99999 (307-01 Automatic Transmission/Transaxle, Diagnosis and Testing).<br>Check the accelerator pedal travel. For APP sensor tests, GO to Pinpoint Test W. and GO to Pinpoint Test X. |
| | Engine backfires | • Fuel pump<br>• Fuel lines<br>• Air leakage<br>• MAF sensor<br>• HO2 sensors<br>• Ignition system<br>• Sticking variable camshaft timing (VCT) hub<br>• APP sensor | For fuel pump and lines tests,<br>REFER to: Fuel Tank and Lines - V8 4.2L Petrol/V8 S/C 4.2L Petrol/2.5L NA V6 - AJV6/3.0L NA V6 - AJ27, VIN Range: N80181->R99999 (310-01 Fuel Tank and Lines, Diagnosis and Testing).<br>For intake system,<br>REFER to: Intake Air Distribution and Filtering - VIN Range: N52048->N99999 (303-12B Intake Air Distribution and Filtering - V8 4.2L Petrol/V8 S/C 4.2L Petrol, Diagnosis and Testing).<br>For MAF sensor tests, GO to Pinpoint Test A. and GO to Pinpoint Test B. Check for DTCs relating to HO2 sensors, refer to the DTC index. For ignition system,<br>REFER to: Engine Ignition - VIN Range: N52048->N99999 (303-07B Engine Ignition - V8 4.2L Petrol/V8 S/C 4.2L Petrol, Diagnosis and Testing).<br>For VCT information,<br>REFER to: Engine - V8 4.2L Petrol/V8 S/C 4.2L Petrol/2.5L NA V6 - AJV6/3.0L NA V6 - AJ27 (303-00 Engine System - General Information, Diagnosis and Testing).<br>For APP sensor tests, GO to Pinpoint Test W. and GO to Pinpoint Test X. |
| | Engine surges | • Fuel pump<br>• Fuel lines<br>• MAF sensor<br>• Harness<br>• TP sensors<br>• Throttle motor<br>• Ignition system | Check the fuel pressure and fuel lines.<br>REFER to: Fuel Tank and Lines - V8 4.2L Petrol/V8 S/C 4.2L Petrol/2.5L NA V6 - AJV6/3.0L NA V6 - AJ27, VIN Range: N80181->R99999 (310-01 Fuel Tank and Lines, Diagnosis and Testing).<br>For MAF sensor tests, GO to Pinpoint Test A. and GO to Pinpoint Test B. For TP sensor tests, GO to Pinpoint Test E. and GO to Pinpoint Test F. For throttle motor tests, GO to Pinpoint Test Y. For ignition system,<br>REFER to: Engine Ignition - VIN Range: N52048->N99999 (303-07B Engine Ignition - V8 4.2L Petrol/V8 S/C 4.2L Petrol, Diagnosis and Testing). |
| | Engine detonates/knocks | • Knock sensor (KS)/circuit malfunction<br>• Fuel pump<br>• Fuel lines<br>• Fuel quality<br>• FRP sensor<br>• MAF sensor<br>• HO2 sensors<br>• Air leakage<br>• Sticking VCT hub<br>• BARO sensor malfunction (internal ECM fault) | For KS circuit tests, GO to Pinpoint Test P. and GO to Pinpoint Test Q. Check the fuel pressure and fuel lines.<br>REFER to: Fuel Tank and Lines - V8 4.2L Petrol/V8 S/C 4.2L Petrol/2.5L NA V6 - AJV6/3.0L NA V6 - AJ27, VIN Range: N80181->R99999 (310-01 Fuel Tank and Lines, Diagnosis and Testing).<br>For FRP sensor tests, GO to Pinpoint Test AL. For MAF sensor tests, GO to Pinpoint Test A. and GO to Pinpoint Test B. Check for DTCs relating to HO2 sensors, refer to the DTC index. For intake system,<br>REFER to: Intake Air Distribution and Filtering - VIN Range: N52048->N99999 (303-12B Intake Air Distribution and Filtering - V8 4.2L Petrol/V8 S/C 4.2L Petrol, Diagnosis and Testing).<br>Check DTCs for VCT range/performance fault. For VCT tests. GO to Pinpoint Test AC. and GO to Pinpoint Test AD. Refer to the warranty policy and procedures manual if an ECM is suspect. |

GETtheMANUALS.org

| Symptom (general) | Symptom (specific) | Possible source | Action |
|---|---|---|---|
| | No throttle response | • APP sensor malfunction<br>• TP sensors<br>• Throttle motor | For TP sensor tests, GO to Pinpoint Test E. and GO to Pinpoint Test F. For throttle motor tests, GO to Pinpoint Test Y. |
| | Speed control inhibited or disabled | • Default mode enabled<br>• Speed control switch<br>• TP sensors<br>• Brake pedal switch<br>• CAN fault | Check message center for default message. For speed control switches,<br>REFER to: Speed Control - VIN Range: N52048->N99999 (310-03 Speed Control, Diagnosis and Testing).<br>For TP sensor tests, GO to Pinpoint Test E. and GO to Pinpoint Test F. For brake pedal switch tests, GO to Pinpoint Test AN. For CAN tests,<br>REFER to: Communications Network - VIN Range: N52048->N99999 (418-00 Module Communications Network, Diagnosis and Testing). |
| | Poor throttle response | • APP sensor malfunction<br>• TP sensors<br>• MAF sensor<br>• Transmission malfunction<br>• Traction control event<br>• Air leakage<br>• Breather system disconnected/restricted | For APP sensor tests, GO to Pinpoint Test W. and GO to Pinpoint Test X. For TP sensor tests, GO to Pinpoint Test E. and GO to Pinpoint Test F. For MAF sensor tests, GO to Pinpoint Test A. and GO to Pinpoint Test B. For transmission information. For intake system,<br>REFER to: Intake Air Distribution and Filtering - VIN Range: N52048->N99999 (303-12B Intake Air Distribution and Filtering - V8 4.2L Petrol/V8 S/C 4.2L Petrol, Diagnosis and Testing).<br>For breather system information,<br>REFER to: Engine Emission Control - VIN Range: N80181->R99999 (303-08A Engine Emission Control - V8 4.2L Petrol/V8 S/C 4.2L Petrol/2.5L NA V6 - AJV6/3.0L NA V6 - AJ27, Diagnosis and Testing). |
| | Engine defaults, warning light and messages. Refer to the owner handbook | • Park/Neutral switch<br>• TP sensors<br>• MAF sensor<br>• Harness | For Park/Neutral tests,<br>REFER to: External Controls (307-05 Automatic Transmission/Transaxle External Controls, Diagnosis and Testing).<br>For TP sensor tests, GO to Pinpoint Test E. and GO to Pinpoint Test F. For MAF sensor tests, GO to Pinpoint Test A. and GO to Pinpoint Test B. |

## DTC index

• NOTE: Generic scan tools may not read the codes listed, or may read only 5-digit codes. Match the 5 digits from the scan tool to the first 5 digits of the 7-digit code listed to identify the fault (the last 2 digits give extra information read by the manufacturer-approved diagnostic system).

| DTC | Description | Possible causes | Action |
|---|---|---|---|
| C003100 | Left front wheel speed sensor | • Invalid data received from ABS: left front wheel speed signal | REFER to: Anti-Lock Control - Stability Assist - VIN Range: N52207->N99999 (206-09 Anti-Lock Control - Stability Assist, Diagnosis and Testing). |
| C003400 | Right front wheel speed sensor | • Invalid data received from ABS: right front wheel speed signal | REFER to: Anti-Lock Control - Stability Assist - VIN Range: N52207->N99999 (206-09 Anti-Lock Control - Stability Assist, Diagnosis and Testing). |
| C003700 | Left rear wheel speed sensor | • Invalid data received from ABS: left rear wheel speed signal | REFER to: Anti-Lock Control - Stability Assist - VIN Range: N52207->N99999 (206-09 Anti-Lock Control - Stability Assist, Diagnosis and Testing). |
| C003A00 | Right rear wheel speed sensor | • Invalid data received from ABS: right rear wheel speed signal | REFER to: Anti-Lock Control - Stability Assist - VIN Range: N52207->N99999 (206-09 Anti-Lock Control - Stability Assist, Diagnosis and Testing). |
| P001100 | Intake (A) camshaft position timing - over-advanced (right hand bank) | • Cam timing has not been set up correctly<br>• Timing chain has slipped | Check the engine timing.<br>REFER to: Timing Drive Components - VIN Range: N52048->N99999 (303-01B Engine - V8 4.2L Petrol/V8 S/C 4.2L Petrol, In-vehicle Repair). |
| P001200 | Intake (A) camshaft position timing - over-retarded (right hand bank) | • Cam timing has not been set up correctly<br>• Timing chain has slipped | Check the engine timing.<br>REFER to: Timing Drive Components - VIN Range: N52048->N99999 (303-01B Engine - V8 4.2L Petrol/V8 S/C 4.2L Petrol, In-vehicle Repair). |
| P001600 | Crankshaft position (CKP)/Camshaft position (CMP) sensor correlation, right hand bank | • The relative positions of the CKP and CMP teeth are not correct<br>- Sensors incorrectly aligned on rebuild | Reset the sensor positions. REFER to: (303-14B Electronic Engine Controls - V8 4.2L Petrol/V8 S/C 4.2L Petrol)<br>Camshaft Position (CMP) Sensor LH (Removal and Installation),<br>Camshaft Position (CMP) Sensor RH (Removal and Installation),<br>Crankshaft Position (CKP) Sensor (Removal and Installation). |
| P001800 | Crankshaft position (CKP)/Camshaft position (CMP) sensor correlation, left hand bank | • The relative positions of the CKP and CMP teeth are not correct<br>- Sensors incorrectly aligned on rebuild | Reset the sensor positions. REFER to: (303-14B Electronic Engine Controls - V8 4.2L Petrol/V8 S/C 4.2L Petrol)<br>Camshaft Position (CMP) Sensor LH (Removal and Installation),<br>Camshaft Position (CMP) Sensor RH (Removal and Installation),<br>Crankshaft Position (CKP) Sensor (Removal and Installation). |
| P002100 | Intake camshaft position timing - over-advanced (left hand bank) | • Cam timing has not been set up correctly<br>• Timing chain has slipped | Check the engine timing.<br>REFER to: Timing Drive Components - VIN Range: N52048->N99999 (303-01B Engine - V8 4.2L Petrol/V8 S/C 4.2L Petrol, In-vehicle Repair). |
| P002200 | Intake camshaft position timing - over-retarded (left hand bank) | • Cam timing has not been set up correctly<br>• Timing chain has slipped | Check the engine timing.<br>REFER to: Timing Drive Components - VIN Range: N52048->N99999 (303-01B Engine - V8 4.2L Petrol/V8 S/C 4.2L Petrol, In-vehicle Repair). |

GETTHEMANUALS.org

| DTC | Description | Possible causes | Action |
|---|---|---|---|
| P002672 | Variable camshaft timing (VCT) control solenoid circuit range/performance (right hand bank) - actuator stuck open | • Oil contamination<br>• VCT oil flow fault<br>• VCT solenoid fault<br>• VCT/Camshaft mechanical failure | Check the oil condition and flow. For right hand bank VCT solenoid circuit tests, GO to Pinpoint Test AC. |
| P002677 | Variable camshaft timing (VCT) control solenoid circuit range/performance (right hand bank) - commanded position not reachable | • Oil contamination<br>• VCT oil flow fault<br>• VCT solenoid fault<br>• VCT/Camshaft mechanical failure | Check the oil condition and flow. For right hand bank VCT solenoid circuit tests, GO to Pinpoint Test AC. |
| P002872 | Variable camshaft timing (VCT) control solenoid circuit range/performance (left hand bank) - actuator stuck open | • Oil contamination<br>• VCT oil flow fault<br>• VCT solenoid fault<br>• VCT/Camshaft mechanical failure | Check the oil condition and flow. For left hand bank VCT solenoid circuit tests, GO to Pinpoint Test AD. |
| P002877 | Variable camshaft timing (VCT) control solenoid circuit range/performance (left hand bank) - commanded position not reachable | • Oil contamination<br>• VCT oil flow fault<br>• VCT solenoid fault<br>• VCT/Camshaft mechanical failure | Check the oil condition and flow. For left hand bank VCT solenoid circuit tests, GO to Pinpoint Test AD. |
| P003100 | HO2S heater control circuit low (right hand bank) | • HO2S heater power supply circuit: open circuit<br>• HO2S heater control circuit: high resistance<br>• HO2S heater ground circuit(s) fault<br>• HO2S heater failure | For right hand bank HO2S heater circuit tests, GO to Pinpoint Test H. |
| P003200 | HO2S heater control circuit high (right hand bank) | • HO2S heater power supply circuit: open circuit<br>• HO2S heater control circuit: high resistance<br>• HO2S heater ground circuit(s) fault<br>• HO2S heater failure | For right hand bank HO2S heater circuit tests, GO to Pinpoint Test H. |
| P003600 | Catalyst monitor heater control circuit (right hand bank) | • Catalyst monitor sensor heater control circuit: short circuit to ground<br>• Catalyst monitor sensor heater control circuit: high resistance<br>• Catalyst monitor sensor heater failure | For right hand bank catalyst monitor heater circuit tests, GO to Pinpoint Test J. |
| P005100 | HO2S heater control circuit low (left hand bank) | • HO2S heater power supply circuit: open circuit<br>• HO2S heater control circuit: high resistance<br>• HO2S heater ground circuit(s) fault<br>• HO2S heater failure | For left hand bank HO2S heater circuit tests, GO to Pinpoint Test L. |
| P005200 | HO2S heater control circuit high (left hand bank) | • HO2S heater power supply circuit: open circuit<br>• HO2S heater control circuit: high resistance<br>• HO2S heater ground circuit(s) fault<br>• HO2S heater failure | For left hand bank HO2S heater circuit tests, GO to Pinpoint Test L. |
| P005600 | Catalyst monitor heater control circuit (left hand bank) | • Catalyst monitor sensor heater control circuit: short circuit to ground<br>• Catalyst monitor sensor heater control circuit: high resistance<br>• Catalyst monitor sensor heater failure | For left hand bank catalyst monitor heater circuit tests, GO to Pinpoint Test N. |
| P006900 | Manifold absolute pressure (MAP) - Barometric pressure correlation | • MAP sensor failure<br>• BARO sensor failure (internal ECM fault) | For MAP sensor circuit tests, GO to Pinpoint Test AF. Refer to the warranty policy and procedure manual if an ECM is suspect. |
| P007100 | Ambient air temperature sensor range/performance | • Ambient temperature value missing from CAN bus | REFER to: Control Components (412-04 Control Components, Diagnosis and Testing). |
| P007200 | Ambient air temperature sensor circuit low | • Ambient air temperature sensor circuit: high resistance<br>• Ambient air temperature sensor circuit: short circuit to ground | REFER to: Control Components (412-04 Control Components, Diagnosis and Testing). |
| P007300 | Ambient air temperature sensor circuit high | • Ambient air temperature sensor circuit: short circuit to power | REFER to: Control Components (412-04 Control Components, Diagnosis and Testing). |
| P007500 | Variable camshaft timing (VCT) control circuit (right hand bank) | • VCT solenoid valve disconnected<br>• VCT solenoid valve to ECM PWM drive circuit: high resistance<br>• VCT solenoid failure | For right hand bank VCT solenoid circuit tests, GO to Pinpoint Test AC. |

GETtheMANUALS.org

| DTC | Description | Possible causes | Action |
|---|---|---|---|
| P007600 | Variable camshaft timing (VCT) control circuit low (right hand bank) | • VCT solenoid valve disconnected<br>• VCT solenoid valve to ECM PWM drive circuit: short circuit to ground<br>• VCT solenoid failure | For right hand bank VCT solenoid circuit tests, GO to Pinpoint Test AC. |
| P007700 | Variable camshaft timing (VCT) control circuit high (right hand bank) | • VCT solenoid valve disconnected<br>• VCT solenoid valve to ECM PWM drive circuit: short circuit to power<br>• VCT solenoid failure | For right hand bank VCT solenoid circuit tests, GO to Pinpoint Test AC. |
| P008100 | Variable camshaft timing (VCT) control circuit (left hand bank) | • VCT solenoid valve disconnected<br>• VCT solenoid valve to ECM PWM drive circuit: high resistance<br>• VCT solenoid failure | For left hand bank VCT solenoid circuit tests, GO to Pinpoint Test AD. |
| P008200 | Variable camshaft timing (VCT) control circuit low (left hand bank) | • VCT solenoid valve disconnected<br>• VCT solenoid valve to ECM PWM drive circuit: short circuit to ground<br>• VCT solenoid failure | For left hand bank VCT solenoid circuit tests, GO to Pinpoint Test AD. |
| P008300 | Variable camshaft timing (VCT) control circuit high (left hand bank) | • VCT solenoid valve disconnected<br>• VCT solenoid valve to ECM PWM drive circuit: short circuit to power<br>• VCT solenoid failure | For left hand bank VCT solenoid circuit tests, GO to Pinpoint Test AD. |
| P008700 | Fuel rail/system pressure - too low | • Fuel rail pressure (FRP) sensor disconnected<br>• Fuel rail pressure (FRP) sensor to ECM sensing circuit: open circuit or short circuit to ground<br>• Fuel rail pressure (FRP) sensor supply circuit: high resistance<br>• Fuel rail pressure (FRP) sensor failure<br>• Fuel pump failure<br>• Fuel line leak<br>• Restricted fuel line | For FRP sensor circuit tests, GO to Pinpoint Test AL. For fuel pump circuit and fuel line tests, REFER to: Fuel Tank and Lines - V8 4.2L Petrol/V8 S/C 4.2L Petrol/2.5L NA V6 - AJV6/3.0L NA V6 - AJ27, VIN Range: N80181->R99999 (310-01 Fuel Tank and Lines, Diagnosis and Testing). |
| P008800 | Fuel rail/system pressure - too high | • FRP sensor to ECM wiring (supply/sense): short circuit to each other<br>• FRP sensor to ECM sense circuit: short circuit to high voltage<br>• FRP sensor ground circuit: high resistance<br>• FRP sensor failure<br>• Restricted fuel line<br>• Fuel pump short circuit to battery | For FRP sensor circuit tests, GO to Pinpoint Test Z. and GO to Pinpoint Test AL. For fuel pump circuit and fuel line tests, REFER to: Fuel Tank and Lines - V8 4.2L Petrol/V8 S/C 4.2L Petrol/2.5L NA V6 - AJV6/3.0L NA V6 - AJ27, VIN Range: N80181->R99999 (310-01 Fuel Tank and Lines, Diagnosis and Testing). |
| P009700 | Manifold absolute pressure/temperature (MAPT) sensor intake air temperature low input | • MAPT intake air temperature sensor circuit: short circuit to ground<br>• MAPT intake air temperature sensor circuit: high resistance | For MAPT intake air temperature sensor tests, GO to Pinpoint Test AI. |
| P009800 | Manifold absolute pressure/temperature (MAPT) sensor intake air temperature high input | • MAPT intake air temperature sensor circuit: short circuit to power | For MAPT intake air temperature sensor tests, GO to Pinpoint Test AI. |
| P010100 | Mass or volume air flow A circuit range/performance | • Blocked air cleaner<br>• Air intake leak<br>• Engine breather leak<br>• Mass air flow (MAF) sensor to ECM sensing circuit: high resistance, intermittent short circuit to ground<br>• MAF sensor supply circuit: high resistance<br>• Throttle adaption fault (check throttle position voltage at Ignition ON) | For intake system information, REFER to: Intake Air Distribution and Filtering - VIN Range: N52048->N99999 (303-12B Intake Air Distribution and Filtering - V8 4.2L Petrol/V8 S/C 4.2L Petrol, Diagnosis and Testing).<br>Check the engine breather system, REFER to: Engine Emission Control - VIN Range: N80181->R99999 (303-08A Engine Emission Control - V8 4.2L Petrol/V8 S/C 4.2L Petrol/2.5L NA V6 - AJV6/3.0L NA V6 - AJ27, Diagnosis and Testing).<br>For MAF sensor tests, GO to Pinpoint Test A. and GO to Pinpoint Test B. |
| P010200 | Mass or volume air flow A circuit low input | • MAF sensor supply circuit: high resistance, short circuit to ground<br>• MAF sensor ground circuit: high resistance<br>• MAF sensor failure | For MAF sensor tests, GO to Pinpoint Test A. and GO to Pinpoint Test B. and GO to Pinpoint Test AA. |
| P010300 | Mass or volume air flow A circuit high input | • MAF sensor to ECM sensing circuit: short circuit to battery<br>• MAF sensor to ECM sensor ground circuit: high resistance<br>• MAF sensor failure | For MAF sensor tests, GO to Pinpoint Test A. and GO to Pinpoint Test B. and GO to Pinpoint Test AA. |

GETtheMANUALS.org

| DTC | Description | Possible causes | Action |
|---|---|---|---|
| P010600 | Manifold absolute pressure (MAP)/BARO sensor range/performance | • Intake manifold air leak (loose or missing component)<br>• MAP sensor to ECM circuit(s) fault<br>• Throttle adaption fault (check throttle position voltage at Ignition ON)<br>• MAP sensor failure | For intake system information, REFER to: Intake Air Distribution and Filtering - VIN Range: N52048->N99999 (303-12B Intake Air Distribution and Filtering - V8 4.2L Petrol/V8 S/C 4.2L Petrol, Diagnosis and Testing).<br>For MAP sensor circuit tests, GO to Pinpoint Test AF. |
| P010700 | Manifold absolute pressure (MAP)/BARO sensor low input | • MAP sensor to ECM circuit: high resistance, short circuit to ground<br>• MAP sensor sensor supply circuit: open circuit<br>• MAP sensor failure | For MAP sensor circuit tests, GO to Pinpoint Test AF. |
| P010800 | Manifold absolute pressure (MAP)/BARO sensor high input | • MAP sensor sensor ground circuit: high resistance<br>• MAP sensor to ECM sense circuit: short circuit to high voltage<br>• MAP sensor failure | For MAP sensor circuit tests, GO to Pinpoint Test AF. |
| P011123 | Intake air temperature (IAT) sensor circuit range/performance - signal stuck low | • IAT sensor to ECM wiring: high resistance<br>• IAT sensor failure | For IAT sensor circuit tests, GO to Pinpoint Test C. |
| P011124 | Intake air temperature (IAT) sensor circuit range/performance - signal stuck high | • IAT sensor to ECM wiring: high resistance<br>• IAT sensor failure | For IAT sensor circuit tests, GO to Pinpoint Test C. |
| P011129 | Intake air temperature (IAT) sensor circuit range/performance - signal invalid | • IAT sensor to ECM wiring: high resistance<br>• IAT sensor failure | For IAT sensor circuit tests, GO to Pinpoint Test C. |
| P011200 | Intake air temperature (IAT) sensor circuit low input | • IAT sensor disconnected<br>• IAT sensor to ECM wiring: high resistance<br>• IAT sensor failure | For IAT sensor circuit tests, GO to Pinpoint Test C. |
| P011300 | Intake air temperature (IAT) sensor circuit high input | • IAT sensor to ECM wiring: short circuit to ground<br>• IAT sensor to ECM sensing circuit: short circuit to battery<br>• IAT sensor failure | For IAT sensor circuit tests, GO to Pinpoint Test C. |
| P011623 | Engine coolant temperature (ECT) sensor circuit range/performance - signal stuck low | • Low coolant level<br>• ECT sensor to ECM sensing circuit: intermittent high resistance<br>• Engine thermostat failure<br>• ECT sensor failure | Check the coolant level, etc. For ECT sensor circuit tests, GO to Pinpoint Test D. |
| P011624 | Engine coolant temperature (ECT) sensor circuit range/performance - signal stuck high | • Low coolant level<br>• ECT sensor to ECM sensing circuit: intermittent high resistance<br>• Engine coolant thermostat failure<br>• ECT sensor failure | Check the coolant level, etc. For ECT sensor circuit tests, GO to Pinpoint Test D. |
| P011629 | Engine coolant temperature (ECT) sensor circuit range/performance - signal invalid | • Low coolant level<br>• ECT sensor to ECM sensing circuit: intermittent high resistance<br>• Engine coolant thermostat failure<br>• ECT sensor failure | Check the coolant level, etc. For ECT sensor circuit tests, GO to Pinpoint Test D. |
| P011700 | Engine coolant temperature (ECT) sensor circuit low input | • ECT sensor disconnected<br>• ECT sensor to ECM sensing circuit: high resistance, open circuit, short circuit to battery<br>• ECT sensor failure | For ECT sensor circuit tests, GO to Pinpoint Test D. |
| P011800 | Engine coolant temperature (ECT) sensor circuit high input | • Engine overheat condition/cooling fan failure<br>• ECT sensor to ECM wiring: short circuit to ground<br>• ECT sensor failure | For cooling fan circuit tests, GO to Pinpoint Test U.<br>For ECT sensor circuit tests, GO to Pinpoint Test D. |
| P012100 | Throttle position (TP) sensor circuit range/performance, circuit 1 and 2 | • TP sensor to ECM wiring: high resistance<br>• TP sensor to ECM sensing circuits: (TP 1 or TP 2) short circuit to battery<br>• TP sensor failure | For throttle position sensor circuit 1 tests, GO to Pinpoint Test E. For throttle position sensor circuit 2 tests, GO to Pinpoint Test F. |
| P012200 | Throttle position (TP) sensor circuit 1 low input | • TP sensor to ECM sensing circuit 1: short circuit to ground, high resistance<br>• TP sensor failure | For throttle position sensor circuit 1 tests, GO to Pinpoint Test E. |

GETtheMANUALS.org

| DTC | Description | Possible causes | Action |
|---|---|---|---|
| P012300 | Throttle position (TP) sensor circuit 1 low input | • TP sensor to ECM sensing circuit (TP1): short circuit to high voltage<br>• TP sensor failure | For throttle position sensor circuit 1 tests, GO to Pinpoint Test E. |
| P012500 | Insufficient coolant temp for closed loop fuel control | • Low coolant level<br>• ECT sensor to ECM sensing circuit: intermittent high resistance<br>• Engine thermostat failure<br>• ECT sensor failure | Check the coolant level, etc. For ECT sensor circuit tests, GO to Pinpoint Test D. |
| P012800 | Coolant thermostat (coolant temp below thermostat regulating temperature) | • Contaminated coolant<br>• Engine coolant thermostat failure<br>• ECT sensor failure<br>- ECT sensor DTC may also be flagged | Check the coolant level, etc. Check the thermostat condition and function. Check for ECT sensor DTCs. |
| P01311A | H02 sensor circuit low voltage (right hand bank) | • H02S disconnected<br>• H02S to ECM variable current circuit fault<br>• ECM to HO2S constant current circuit fault<br>• H02S failure | For right hand bank HO2 sensor circuit tests, GO to Pinpoint Test G. |
| P01321B | H02 sensor circuit high voltage (right hand bank) | • H02S disconnected<br>• H02S to ECM variable current circuit fault<br>• ECM to HO2S constant current circuit fault<br>• H02S failure | For right hand bank HO2 sensor circuit tests, GO to Pinpoint Test G. |
| P013300 | HO2 sensor circuit slow response (right hand bank) | • HO2S to ECM wiring shield high resistance<br>• Exhaust leak<br>• Fuel control system fault<br>• HO2 sensor failure | For right hand bank HO2 sensor circuit tests, GO to Pinpoint Test G. |
| P013400 | HO2 sensor circuit no activity detected (right hand bank) | • HO2S slow activation | For right hand bank HO2 sensor circuit tests, GO to Pinpoint Test G. |
| P013700 | Catalyst monitor circuit low voltage (right hand bank) | • Catalyst monitor sensor disconnected<br>• Catalyst monitor sensor to ECM wiring: high resistance<br>• Catalyst monitor sensor: short circuit to ground<br>• Catalyst monitor sensor failure | For right hand bank catalyst monitor circuit tests, GO to Pinpoint Test I. and GO to Pinpoint Test J. |
| P013800 | Catalyst monitor circuit high voltage (right hand bank) | • Catalyst monitor sensor sensing circuit: short circuit to power<br>• Catalyst monitor sensor ground braided shield: high resistance<br>• Catalyst monitor sensor failure | For right hand bank catalyst monitor circuit tests, GO to Pinpoint Test I. and GO to Pinpoint Test J. |
| P013900 | Catalyst monitor sensor circuit slow response (right hand bank) | • Catalyst monitor sensor slow response | For right hand bank catalyst monitor circuit tests, GO to Pinpoint Test I. and GO to Pinpoint Test J. |
| P014000 | Catalyst monitor circuit no activity detected (right hand bank) | • Catalyst monitor disconnected<br>• Catalyst monitor mechanical damage<br>• Catalyst monitor to ECM wiring: high resistance<br>• Catalyst monitor sensing circuit: short circuit to power<br>• Catalyst monitor: short circuit to ground<br>• Catalyst monitor ground (BRD braided shield) high resistance | For right hand bank catalyst monitor circuit tests, GO to Pinpoint Test I. and GO to Pinpoint Test J. |
| P014100 | Catalyst monitor heater circuit (right hand bank) | • Catalyst monitor sensor heater control circuit: high resistance<br>• Catalyst monitor sensor heater failure | For right hand bank catalyst monitor circuit tests, GO to Pinpoint Test I. and GO to Pinpoint Test J. |
| P01511A | H02 sensor circuit low voltage (left hand bank) - circuit resistance below threshold | • HO2 sensing circuit: short circuit to ground, short circuit to high voltage, high resistance<br>• HO2S failure | For left hand bank HO2S circuit tests, GO to Pinpoint Test K. |
| P01521B | H02 sensor circuit low voltage (left hand bank) - circuit resistance above threshold | • H02S sensing circuit: short circuit to ground, short circuit to high voltage, high resistance<br>• H02S failure | For left hand bank HO2S circuit tests, GO to Pinpoint Test K. |
| P015300 | H02S circuit slow response (left hand bank) | • H02S to ECM wiring shield high resistance<br>• Exhaust leak<br>• Fuel control system fault<br>• H02S failure | For left hand bank HO2S circuit tests, GO to Pinpoint Test K. |
| P015400 | H02S circuit no activity detected (left hand bank) | • H02S slow activation | For left hand bank HO2S circuit tests, GO to Pinpoint Test K. |

GETtheMANUALS.org

| DTC | Description | Possible causes | Action |
|---|---|---|---|
| P015700 | Catalyst monitor sensor circuit low voltage (left hand bank) | • Catalyst monitor sensor disconnected<br>• Catalyst monitor sensor to ECM wiring high resistance<br>• Catalyst monitor sensor short circuit to ground<br>• Fuel control system lean fault<br>• Catalyst monitor sensor failure | For left hand bank catalyst monitor circuit tests, GO to Pinpoint Test M. and GO to Pinpoint Test N. |
| P015800 | Catalyst monitor sensor circuit high voltage (left hand bank) | • Catalyst monitor sensor sensing circuit: short circuit to high voltage<br>• Catalyst monitor sensor ground (BRD braided shield) high resistance<br>• Catalyst monitor sensor failure | For left hand bank catalyst monitor circuit tests, GO to Pinpoint Test M. and GO to Pinpoint Test N. |
| P015900 | Catalyst monitor sensor circuit slow response (left hand bank) | • Catalyst monitor sensor slow response | For left hand bank catalyst monitor circuit tests, GO to Pinpoint Test M. and GO to Pinpoint Test N. |
| P016000 | Catalyst monitor sensor circuit no activity detected (left hand bank) | • Catalyst monitor sensor disconnected<br>• Catalyst monitor sensor mechanical damage<br>• Catalyst monitor sensor to ECM wiring high resistance<br>• Catalyst monitor sensor sensing circuit: short circuit to high voltage<br>• Catalyst monitor sensor short circuit to ground<br>• Catalyst monitor sensor ground (BRD braided shield) high resistance | For left hand bank catalyst monitor circuit tests, GO to Pinpoint Test M. and GO to Pinpoint Test N. |
| P016100 | Catalyst monitor sensor heater circuit (left hand bank) | • Catalyst monitor sensor heater control circuit malfunction | For left hand bank catalyst monitor circuit tests, GO to Pinpoint Test M. and GO to Pinpoint Test N. |
| P017100 | System too lean (right hand bank) | • Air intake leak between MAF sensor and cylinder head<br>• Fuel filter/system restriction<br>• Fuel injector restriction<br>• MAF sensor fault (low intake air flow)<br>• Exhaust leak (before catalyst) | For intake system information, REFER to: Intake Air Distribution and Filtering - VIN Range: N52048->N99999 (303-12B Intake Air Distribution and Filtering - V8 4.2L Petrol/V8 S/C 4.2L Petrol, Diagnosis and Testing).<br>For fuel line and fuel pressure tests, REFER to: Fuel Tank and Lines - V8 4.2L Petrol/V8 S/C 4.2L Petrol/2.5L NA V6 - AJV6/3.0L NA V6 - AJ27, VIN Range: N80181->R99999 (310-01 Fuel Tank and Lines, Diagnosis and Testing).<br>For fuel injector information, REFER to: Fuel Injectors (303-04B Fuel Charging and Controls - V8 4.2L Petrol/V8 S/C 4.2L Petrol, Removal and Installation).<br>For MAF sensor tests, GO to Pinpoint Test A. and GO to Pinpoint Test B. Check the exhaust system (before catalyst) for condition and security, REFER to: Exhaust System - VIN Range: N13089->N99999 (309-00 Exhaust System, Diagnosis and Testing). |
| P017200 | System too rich (right hand bank) | • Restricted air filter<br>• Leaking fuel injector(s)<br>• Oil contaminated with fuel (too many cold starts with vehicle subsequently not getting hot enough for long enough)<br>• MAF sensor fault (high intake air flow) | For intake system information, REFER to: Intake Air Distribution and Filtering - VIN Range: N52048->N99999 (303-12B Intake Air Distribution and Filtering - V8 4.2L Petrol/V8 S/C 4.2L Petrol, Diagnosis and Testing).<br>For fuel injector information, REFER to: Fuel Injectors (303-04B Fuel Charging and Controls - V8 4.2L Petrol/V8 S/C 4.2L Petrol, Removal and Installation).<br>Check oil condition, if contamination is present, renew engine oil and filter. For MAF sensor tests, GO to Pinpoint Test A. and GO to Pinpoint Test B. |
| P017400 | System too lean (left hand bank) | • Air intake leak between MAF sensor and cylinder head<br>• Fuel filter/system restriction<br>• Fuel injector restriction<br>• MAF sensor fault (low intake air flow)<br>• Exhaust leak (before catalyst) | For intake system information, REFER to: Intake Air Distribution and Filtering - VIN Range: N52048->N99999 (303-12B Intake Air Distribution and Filtering - V8 4.2L Petrol/V8 S/C 4.2L Petrol, Diagnosis and Testing).<br>For fuel line and pressure tests, REFER to: Fuel Tank and Lines - V8 4.2L Petrol/V8 S/C 4.2L Petrol/2.5L NA V6 - AJV6/3.0L NA V6 - AJ27, VIN Range: N80181->R99999 (310-01 Fuel Tank and Lines, Diagnosis and Testing).<br>For fuel injector information, REFER to: Fuel Injectors (303-04B Fuel Charging and Controls - V8 4.2L Petrol/V8 S/C 4.2L Petrol, Removal and Installation).<br>For MAF sensor tests, GO to Pinpoint Test A. and GO to Pinpoint Test B. Check the exhaust system (before catalyst) for condition and security, REFER to: Exhaust System - VIN Range: N13089->N99999 (309-00 Exhaust System, Diagnosis and Testing). |

GETtheMANUALS.org

| DTC | Description | Possible causes | Action |
|---|---|---|---|
| P017500 | System too rich (left hand bank) | • Restricted air filter<br>• Leaking fuel injector(s)<br>• Oil contaminated with fuel (too many cold starts with vehicle subsequently not getting hot enough for long enough)<br>• MAF sensor fault (high intake air flow) | For intake system information, REFER to: Intake Air Distribution and Filtering - VIN Range: N52048->N99999 (303-12B Intake Air Distribution and Filtering - V8 4.2L Petrol/V8 S/C 4.2L Petrol, Diagnosis and Testing).<br>For fuel injector information, REFER to: Fuel Injectors (303-04B Fuel Charging and Controls - V8 4.2L Petrol/V8 S/C 4.2L Petrol, Removal and Installation).<br>Check oil condition, if contamination is present, renew engine oil and filter. For MAF sensor tests, GO to Pinpoint Test A. and GO to Pinpoint Test B. |
| P018123 | Engine fuel temperature (EFT) sensor A circuit range/performance - signal stuck low | • EFT sensor to ECM sensing circuit: high resistance, short circuit to ground, short circuit to high voltage<br>• EFT sensor ground circuit: high resistance<br>• EFT sensor failure | For EFT sensor circuit tests, GO to Pinpoint Test AG. |
| P018124 | Engine fuel temperature (EFT) sensor circuit range/performance - signal stuck high | • EFT sensor to ECM sensing circuit: high resistance, short circuit to ground, short circuit to high voltage<br>• EFT sensor ground circuit: high resistance<br>• EFT sensor failure | For EFT sensor circuit tests, GO to Pinpoint Test AG. |
| P018129 | Engine fuel temperature (EFT) sensor A circuit range/performance - signal invalid | • EFT sensor to ECM sensing circuit: high resistance, short circuit to ground, short circuit to high voltage<br>• EFT sensor ground circuit: high resistance<br>• EFT sensor failure | For EFT sensor circuit tests, GO to Pinpoint Test AG. |
| P018200 | Engine fuel temperature (EFT) sensor circuit low input | • EFT sensor to ECM sensing circuit: short circuit to ground<br>• EFT sensor to splice sensor ground circuit: short circuit<br>• EFT sensor failure | For EFT sensor circuit tests, GO to Pinpoint Test AG. |
| P018300 | Engine fuel temperature (EFT) sensor circuit high input | • EFT sensor disconnected<br>• EFT sensor to ECM sensing circuit: high resistance, short circuit to high voltage<br>• EFT sensor to splice sensor ground circuit: high resistance<br>• EFT sensor failure | For EFT sensor circuit tests, GO to Pinpoint Test AG. |
| P019100 | Fuel rail pressure (FRP) sensor circuit range/performance | • FRP sensor range and performance | For FRP sensor circuit tests, GO to Pinpoint Test AL. |
| P019200 | Fuel rail pressure (FRP) sensor circuit low input | • FRP sensor disconnected<br>• FRP sensor to ECM sensing circuit: high resistance or short circuit to ground<br>• FRP sensor to supply circuit: high resistance<br>• FRP sensor failure | For FRP sensor circuit tests, GO to Pinpoint Test AL. |
| P019300 | Fuel rail pressure (FRP) sensor circuit high input | • FRP sensor to ECM wiring (supply, sense): short circuit to each other<br>• FRP sensor to ECM sense circuit: short circuit to high voltage<br>• FRP sensor ground circuit: high resistance<br>• FRP sensor failure | For FRP sensor circuit tests, GO to Pinpoint Test AL. |
| P019623 | Engine oil temperature (EOT) sensor circuit range/performance - signal stuck low | • EOT sensor to ECM sensing circuit: intermittent high resistance<br>• EOT sensor failure | For EOT sensor circuit tests, GO to Pinpoint Test O. |
| P019624 | Engine oil temperature (EOT) sensor circuit range/performance - signal stuck high | • EOT sensor to ECM sensing circuit: intermittent high resistance<br>• EOT sensor failure | For EOT sensor circuit tests, GO to Pinpoint Test O. |
| P019629 | Engine oil temperature (EOT) sensor circuit range/performance - signal invalid | • EOT sensor to ECM sensing circuit: intermittent high resistance<br>• EOT sensor failure | For EOT sensor circuit tests, GO to Pinpoint Test O. |
| P019700 | Engine oil temperature (EOT) sensor circuit low input | • EOT sensor to ECM sensing circuit: short circuit to ground<br>• EOT sensor failure | For EOT sensor circuit tests, GO to Pinpoint Test O. |

GETtheMANUALS.org

| DTC | Description | Possible causes | Action |
|---|---|---|---|
| P019800 | Engine oil temperature (EOT) sensor circuit high input | • EOT sensor disconnected<br>• EOT sensor to ECM sensing circuit: high resistance, short circuit to battery<br>• EOT sensor failure | For EOT sensor circuit tests, GO to Pinpoint Test O. |
| P020100 | Cylinder 1 injector circuit/open | • Injector disconnected<br>• Injector harness wiring: high resistance, short circuit to ground<br>• Injector failure | For injector circuit tests,<br>REFER to: Fuel Charging and Controls - VIN Range: N52048->N99999 (303-04B Fuel Charging and Controls - V8 4.2L Petrol/V8 S/C 4.2L Petrol, Diagnosis and Testing). |
| P020200 | Cylinder 2 injector circuit/open | • Injector disconnected<br>• Injector harness wiring: high resistance, short circuit to ground<br>• Injector failure | For injector circuit tests,<br>REFER to: Fuel Charging and Controls - VIN Range: N52048->N99999 (303-04B Fuel Charging and Controls - V8 4.2L Petrol/V8 S/C 4.2L Petrol, Diagnosis and Testing). |
| P020300 | Cylinder 3 injector circuit/open | • Injector disconnected<br>• Injector harness wiring: high resistance, short circuit to ground<br>• Injector failure | For injector circuit tests,<br>REFER to: Fuel Charging and Controls - VIN Range: N52048->N99999 (303-04B Fuel Charging and Controls - V8 4.2L Petrol/V8 S/C 4.2L Petrol, Diagnosis and Testing). |
| P020400 | Cylinder 4 injector circuit/open | • Injector disconnected<br>• Injector harness wiring: high resistance, short circuit to ground<br>• Injector failure | For injector circuit tests,<br>REFER to: Fuel Charging and Controls - VIN Range: N52048->N99999 (303-04B Fuel Charging and Controls - V8 4.2L Petrol/V8 S/C 4.2L Petrol, Diagnosis and Testing). |
| P020500 | Cylinder 5 injector circuit/open | • Injector disconnected<br>• Injector harness wiring: high resistance, short circuit to ground<br>• Injector failure | For injector circuit tests,<br>REFER to: Fuel Charging and Controls - VIN Range: N52048->N99999 (303-04B Fuel Charging and Controls - V8 4.2L Petrol/V8 S/C 4.2L Petrol, Diagnosis and Testing). |
| P020600 | Cylinder 6 injector circuit/open | • Injector disconnected<br>• Injector harness wiring: high resistance, short circuit to ground<br>• Injector failure | For injector circuit tests,<br>REFER to: Fuel Charging and Controls - VIN Range: N52048->N99999 (303-04B Fuel Charging and Controls - V8 4.2L Petrol/V8 S/C 4.2L Petrol, Diagnosis and Testing). |
| P020700 | Cylinder 7 injector circuit/open | • Injector disconnected<br>• Injector harness wiring: high resistance, short circuit to ground<br>• Injector failure | For injector circuit tests,<br>REFER to: Fuel Charging and Controls - VIN Range: N52048->N99999 (303-04B Fuel Charging and Controls - V8 4.2L Petrol/V8 S/C 4.2L Petrol, Diagnosis and Testing). |
| P020800 | Cylinder 8 injector circuit/open | • Injector disconnected<br>• Injector harness wiring: high resistance, short circuit to ground<br>• Injector failure | For injector circuit tests,<br>REFER to: Fuel Charging and Controls - VIN Range: N52048->N99999 (303-04B Fuel Charging and Controls - V8 4.2L Petrol/V8 S/C 4.2L Petrol, Diagnosis and Testing). |
| P022200 | Throttle position (TP) sensor circuit 2 low input | • TP sensor circuit 2 low input | For TP sensor circuit 2 tests, GO to Pinpoint Test F. |
| P022300 | Throttle position (TP) sensor circuit 2 high input | • TP sensor circuit 2 high input | For TP sensor circuit 2 tests, GO to Pinpoint Test F. |
| P022700 | Accelerator pedal position (APP) sensor circuit 1 low input | • Accelerator pedal position (APP) sensor circuit 1: short circuit to ground<br>• Accelerator pedal position (APP) sensor circuit 1: high resistance | For APP sensor circuit 1 tests, GO to Pinpoint Test W. |
| P022800 | Accelerator pedal position (APP) sensor circuit 1 high input | • Accelerator pedal position (APP) sensor circuit 1: short circuit to power | For APP sensor circuit 1 tests, GO to Pinpoint Test W. |
| P023700 | Manifold absolute pressure/temperature (MAPT) sensor pressure low | • MAPT pressure sensor to ECM circuit: short circuit to ground<br>• MAPT pressure sensor to ECM circuit: high resistance | For MAPT pressure sensor tests, GO to Pinpoint Test AM. |
| P023800 | Manifold absolute pressure/temperature (MAPT) sensor pressure high | • MAPT pressure sensor to ECM circuit: short circuit to power | For MAPT pressure sensor tests, GO to Pinpoint Test AM. |
| P023B13 | Charge air cooler coolant pump control circuit low | • Charge air cooler coolant pump circuit low (short circuit) | For auxiliary coolant pump tests, GO to Pinpoint Test AK. |
| P023C12 | Charge air cooler coolant pump control circuit high | • Charge air cooler coolant pump circuit (open circuit) | For auxiliary coolant pump tests, GO to Pinpoint Test AK. |
| P030000 | Random/multiple cylinder misfire detected | • ECM to ignition coil primary circuit faults (cylinder misfire detected DTCs also logged)<br>• Ignition coil failure<br>• Spark plug failure/fouled/incorrect gap<br>• Fuel delivery pressure (low/high)<br>• Fuel injector circuit fault(s) (injector DTCs also logged)<br>• Fuel injectors restricted/leaking<br>• Fuel injectors continuously open<br>• Fuel contamination<br>• Cylinder compression low<br>• Worn camshaft/broken valve springs<br>• Valve clearance adjustment | For ignition coil and spark plug tests,<br>REFER to: Engine Ignition - VIN Range: N52048->N99999 (303-07B Engine Ignition - V8 4.2L Petrol/V8 S/C 4.2L Petrol, Diagnosis and Testing).<br>For fuel pressure test,<br>REFER to: Fuel Tank and Lines - V8 4.2L Petrol/V8 S/C 4.2L Petrol/2.5L NA V6 - AJV6/3.0L NA V6 - AJ27, VIN Range: N80181->R99999 (310-01 Fuel Tank and Lines, Diagnosis and Testing).<br>For fuel injector circuit tests,<br>REFER to: Fuel Charging and Controls - VIN Range: N52048->N99999 (303-04B Fuel Charging and Controls - V8 4.2L Petrol/V8 S/C 4.2L Petrol, Diagnosis and Testing).<br>For injector information, |

GETtheMANUALS.org

| DTC | Description | Possible causes | Action |
|---|---|---|---|
| | | | REFER to: Fuel Injectors (303-04B Fuel Charging and Controls - V8 4.2L Petrol/V8 S/C 4.2L Petrol, Removal and Installation).<br>Check the fuel for contamination, grade and quality. For camshaft and valve information, REFER to: Engine - V8 4.2L Petrol/V8 S/C 4.2L Petrol/2.5L NA V6 - AJV6/3.0L NA V6 - AJ27 (303-00 Engine System - General Information, Diagnosis and Testing). |
| P030100 | Cylinder 1 misfire detected | Refer to P030000 possible sources | Refer to P030000 actions |
| P030200 | Cylinder 2 misfire detected | Refer to P030000 possible sources | Refer to P030000 actions |
| P030300 | Cylinder 3 misfire detected | Refer to P030000 possible sources | Refer to P030000 actions |
| P030400 | Cylinder 4 misfire detected | Refer to P030000 possible sources | Refer to P030000 actions |
| P030500 | Cylinder 5 misfire detected | Refer to P030000 possible sources | Refer to P030000 actions |
| P030600 | Cylinder 6 misfire detected | Refer to P030000 possible sources | Refer to P030000 actions |
| P030700 | Cylinder 7 misfire detected | Refer to P030000 possible sources | Refer to P030000 actions |
| P030800 | Cylinder 8 misfire detected | Refer to P030000 possible sources | Refer to P030000 actions |
| P031300 | Misfire detected with low fuel | • Misfire detected during low fuel level condition | Check for fuel level sensor codes, add fuel. Clear the DTC and test for normal operation. |
| P031600 | Engine misfire detected on startup | • Misfire detected on first 1000 revs<br>• Refer to P030000 possible sources | Carry out the tests indicated for a normal misfire code, but on a cold engine. |
| P032700 | Knock sensor (KS) 1 circuit low input (right hand bank) | • Poor sensor contact with the cylinder block<br>• KS to ECM sense circuit: short circuit to ground<br>• KS failure | For right hand bank KS circuit tests, GO to Pinpoint Test P. |
| P032800 | Knock sensor (KS) 1 circuit high input (right hand bank) | • Poor sensor contact with the cylinder block<br>• KS to ECM sense circuit: high resistance, short circuit to power<br>• KS failure | For right hand bank KS circuit tests, GO to Pinpoint Test P. |
| P033200 | Knock sensor (KS) 2 circuit low input (left hand bank) | • Poor sensor contact with the cylinder block<br>• KS to ECM sense circuit: short circuit to ground<br>• KS failure | For left hand bank KS circuit tests, GO to Pinpoint Test Q. |
| P033300 | Knock sensor (KS) 2 circuit high input (left hand bank) | • Poor sensor contact with the cylinder block<br>• KS to ECM sense circuit: high resistance, short circuit to power<br>• KS failure | For left hand bank KS circuit tests, GO to Pinpoint Test Q. |
| P033592 | Crankshaft position (CKP) sensor A circuit - performance or incorrect operation | • CKP sensor disconnected<br>• CKP Sensor gap incorrect/ foreign matter on sensor face /damaged teeth on rotor<br>• CKP sensor sensing circuit: high resistance, short circuit to ground, short circuit to power<br>• CKP sensor failure | For CKP sensor circuit tests, GO to Pinpoint Test R. |
| P033594 | Crankshaft position (CKP) sensor A circuit - unexpected operation | • CKP sensor disconnected<br>• CKP sensor gap incorrect/ foreign matter on sensor face /damaged teeth on rotor<br>• CKP sensor sensing circuit: high resistance, short circuit to ground, short circuit to power<br>• CKP sensor failure | For CKP sensor circuit tests, GO to Pinpoint Test R. |
| P033600 | Crankshaft position (CKP) sensor A circuit range/performance | • CKP sensor gap incorrect/ foreign matter on sensor face /damaged teeth on rotor<br>• CKP sensor sensing circuit: intermittent high resistance, short circuit to ground, short circuit to power<br>• CKP sensor failure | For CKP sensor circuit tests, GO to Pinpoint Test R. |
| P034092 | Camshaft position (CMP) sensor A circuit (right hand bank or single sensor) - performance or incorrect operation | • CMP sensor disconnected<br>• CMP sensor gap incorrect/ foreign matter on sensor face /damaged rotor<br>• CMP sensor sensing circuit: high resistance, short circuit to ground, short circuit to power<br>• CMP sensor 1 failure | For right hand bank CMP circuit tests, GO to Pinpoint Test S. |
| P034094 | Camshaft position (CMP) sensor A circuit (right hand bank or single sensor) - unexpected operation | • CMP sensor disconnected<br>• CMP sensor gap incorrect/ foreign matter on sensor face /damaged rotor<br>• CMP sensor sensing circuit: high resistance, short circuit to | For right hand bank CMP circuit tests, GO to Pinpoint Test S. |

GETtheMANUALS.org

| DTC | Description | Possible causes | Action |
|---|---|---|---|
| | | ground, short circuit to power<br>• CMP sensor 1 failure | |
| P034100 | Camshaft position (CMP) sensor A circuit range/performance (right hand bank or single sensor) | • CMP sensor disconnected<br>• CMP sensor gap incorrect/ foreign matter on sensor face /damaged rotor<br>• CMP sensor sensing circuit: high resistance, short circuit to ground, short circuit to power<br>• CMP sensor 1 failure | For right hand bank CMP circuit tests, GO to Pinpoint Test S. |
| P034592 | Camshaft position (CMP) sensor A circuit (left hand bank) - performance or incorrect operation | • CMP sensor disconnected<br>• CMP sensor gap incorrect/ foreign matter on sensor face /damaged rotor<br>• CMP sensor sensing circuit: high resistance, short circuit to ground, short circuit to power<br>• CMP sensor 2 failure | For left hand bank CMP circuit tests, GO to Pinpoint Test T. |
| P034594 | Camshaft position (CMP) sensor A circuit (left hand bank) - unexpected operation | • CMP sensor disconnected<br>• CMP sensor gap incorrect/ foreign matter on sensor face /damaged rotor<br>• CMP sensor sensing circuit: high resistance short circuit to ground, short circuit to power<br>• CMP sensor 2 failure | For left hand bank CMP circuit tests, GO to Pinpoint Test T. |
| P034600 | Camshaft position (CMP) sensor A circuit range/performance (left hand bank) | • CMP sensor disconnected<br>• CMP sensor gap incorrect/ foreign matter on sensor face /damaged rotor<br>• CMP sensor sensing circuit: high resistance, short circuit to ground, short circuit to power<br>• CMP sensor 2 failure | For left hand bank CMP circuit tests, GO to Pinpoint Test T. |
| P035100 | Ignition coil 1 primary/secondary circuit | • ECM to ignition module/coil drive circuit: high resistance, short circuit to ground<br>• Ignition module/coil ground circuit: high resistance<br>• Ignition module/coil battery supply circuit: high resistance (including relay, if fitted) | For ignition coil tests, REFER to: Engine Ignition - VIN Range: N52048->N99999 (303-07B Engine Ignition - V8 4.2L Petrol/V8 S/C 4.2L Petrol, Diagnosis and Testing). |
| P035200 | Ignition coil 2 primary/secondary circuit | • ECM to ignition module/coil drive circuit: short circuit to ground, high resistance<br>• Ignition module/coil ground circuit: open circuit<br>• Ignition module/coil battery supply circuit: high resistance (including relay, if fitted) | For ignition coil tests, REFER to: Engine Ignition - VIN Range: N52048->N99999 (303-07B Engine Ignition - V8 4.2L Petrol/V8 S/C 4.2L Petrol, Diagnosis and Testing). |
| P035300 | Ignition coil 3 primary/secondary circuit | • ECM to ignition module/coil drive circuit: short circuit to ground, high resistance<br>• Ignition module/coil ground circuit: high resistance<br>• Ignition module/coil battery supply circuit: high resistance (including relay, if fitted) | For ignition coil tests, REFER to: Engine Ignition - VIN Range: N52048->N99999 (303-07B Engine Ignition - V8 4.2L Petrol/V8 S/C 4.2L Petrol, Diagnosis and Testing). |
| P035400 | Ignition coil 4 primary/secondary circuit | • ECM to ignition module/coil drive circuit: short circuit to ground, high resistance<br>• Ignition module/coil ground circuit: high resistance<br>• Ignition module/coil battery supply circuit: high resistance (including relay, if fitted) | For ignition coil tests, REFER to: Engine Ignition - VIN Range: N52048->N99999 (303-07B Engine Ignition - V8 4.2L Petrol/V8 S/C 4.2L Petrol, Diagnosis and Testing). |
| P035500 | Ignition coil 5 primary/secondary circuit | • ECM to ignition module/coil drive circuit: short circuit to ground, high resistance<br>• Ignition module/coil ground circuit: high resistance<br>• Ignition module/coil battery supply circuit: high resistance (including relay, if fitted) | For ignition coil tests, REFER to: Engine Ignition - VIN Range: N52048->N99999 (303-07B Engine Ignition - V8 4.2L Petrol/V8 S/C 4.2L Petrol, Diagnosis and Testing). |
| P035600 | Ignition coil 6 primary/secondary circuit | • ECM to ignition module/coil drive circuit: short circuit to ground, high resistance<br>• Ignition module/coil ground circuit: high resistance<br>• Ignition module/coil battery supply circuit: high resistance (including relay, if fitted) | For ignition coil tests, REFER to: Engine Ignition - VIN Range: N52048->N99999 (303-07B Engine Ignition - V8 4.2L Petrol/V8 S/C 4.2L Petrol, Diagnosis and Testing). |

## Pinpoint Tests

### PINPOINT TEST A : MASS AIR FLOW (MAF) SENSOR CIRCUIT RANGE/PERFORMANCE, HIGH/LOW VOLTAGE

CAUTION: When probing connectors to take measurements in the course of the pinpoint tests, use the adaptor kit, part number 3548-1358-00.

CEPublications.com

• NOTE: When performing electrical voltage or resistance tests, always use a digital multimeter (DMM) accurate to 3 decimal places, and with an up-to-date calibration certificate. When testing resistance, always take the resistance of the DMM leads into account.

• NOTE: Check and rectify basic faults before beginning diagnostic routines involving pinpoint tests.

• NOTE: Before commencing this test, check the air filter for blockage, the engine air intake and breather systems for leaks, and the TP sensor for additional DTCs.

| TEST CONDITIONS | DETAILS/RESULTS/ACTIONS |
|---|---|
| **A1: CHECK THE MAF SENSOR SENSING CIRCUIT FOR HIGH RESISTANCE** | |
| | 1 Key off. |
| | 2 Disconnect the ECM electrical connector, PI300. |
| | 3 Disconnect the MAF sensor electrical connector, PI14. |
| | 4 Measure the resistance between: |

| ECM connector PI300, harness side | MAF connector PI14, harness side |
|---|---|
| Pin 70 | Pin 03 |

| | |
|---|---|
| | Is the resistance greater than 5 ohms?<br>**Yes**<br>REPAIR the high resistance circuit. For additional information, refer to the wiring diagrams. CLEAR the DTC. TEST the system for normal operation.<br>**No**<br>GO to A2. |
| **A2: CHECK THE MAF SENSOR SENSING CIRCUIT FOR SHORT CIRCUIT TO POWER** | |
| | 1 Key on, engine off. |
| | 2 Measure the voltage between: |

| MAF connector PI14, harness side | Battery |
|---|---|
| Pin 03 | Negative terminal |

| | |
|---|---|
| | Is the voltage greater than 3 volts?<br>**Yes**<br>REPAIR the short circuit. For additional information, refer to the wiring diagrams. CLEAR the DTC. TEST the system for normal operation.<br>**No**<br>GO to A3. |
| **A3: CHECK THE MAF SENSOR SENSING CIRCUIT FOR SHORT CIRCUIT TO GROUND** | |
| | 1 Key off. |
| | 2 Measure the resistance between: |

| MAF connector PI14, harness side | Battery |
|---|---|
| Pin 03 | Negative terminal |

| | |
|---|---|
| | Is the resistance less than 10,000 ohms?<br>**Yes**<br>REPAIR the short circuit. For additional information, refer to the wiring diagrams. CLEAR the DTC. TEST the system for normal operation<br>**No**<br>GO to A4. |
| **A4: CHECK THE MAF SENSOR SUPPLY CIRCUIT VOLTAGE** | |
| | 1 Reconnect the ECM electrical connector, PI300. |
| | 2 Key on, engine off. |
| | 3 Measure the voltage between: |

| MAF connector PI14, harness side | Battery |
|---|---|
| Pin 01 | Negative terminal |

| | |
|---|---|
| | Is the voltage greater than 10 volts?<br>**Yes**<br>INSTALL a new MAF sensor.<br>REFER to: Mass Air Flow (MAF) Sensor (303-14B Electronic Engine Controls - V8 4.2L Petrol/V8 S/C 4.2L Petrol, Removal and Installation).<br>CLEAR the DTC. TEST the system for normal operation.<br>**No**<br>REPAIR the circuit between the MAF sensor electrical connector and BATTERY. This circuit includes the EMS control relay, fuse 37 of the front power distribution box, and the high power protection module. For additional information, refer to the wiring diagrams. CLEAR the DTC. TEST the system for normal operation. |

## PINPOINT TEST B : MASS AIR FLOW (MAF) SENSOR GROUND MALFUNCTION

| TEST CONDITIONS | DETAILS/RESULTS/ACTIONS |
|---|---|
| **B1: CHECK THE MAF SENSOR GROUND** | |
| | 1 Disconnect the MAF sensor electrical connector, PI14. |
| | 2 Key on, engine off. |
| | 3 Measure the resistance between: |

| MAF sensor connector PI14, harness side | Battery |
|---|---|
| Pin 02 | Negative terminal |

| | |
|---|---|
| | Is the resistance greater than 5 ohms?<br>**Yes**<br>GO to B2.<br>**No**<br>INSTALL a new MAF sensor.<br>REFER to: Mass Air Flow (MAF) Sensor (303-14B Electronic Engine Controls - V8 4.2L Petrol/V8 S/C 4.2L Petrol, Removal and Installation).<br>CLEAR the DTC. TEST the system for normal operation. |
| **B2: CHECK THE MAF SENSOR GROUND CIRCUIT FOR HIGH RESISTANCE** | |
| | 1 Key off. |
| | 2 Disconnect the ECM electrical connector, PI300. |
| | 3 Measure the resistance between: |

| MAF sensor connector PI14, harness side | ECM connector PI300, harness side |
|---|---|
| Pin 02 | Pin 18 |

GETtheMANUALS.org

| | |
|---|---|
| | Is the resistance greater than 5 ohms?<br>**Yes**<br>REPAIR the high resistance circuit. For additional information, refer to the wiring diagrams. CLEAR the DTC. TEST the system for normal operation.<br>**No**<br>GO to B3. |

**B3: CHECK THE MAF SENSOR GROUND CIRCUIT FOR SHORT CIRCUIT TO POWER**

| | |
|---|---|
| | 1 Key on, engine off. |
| | 2 Measure the voltage between: |

| MAF sensor connector PI14, harness side | Battery |
|---|---|
| Pin 02 | Negative terminal |

| | |
|---|---|
| | Is the voltage greater than 3 volts?<br>**Yes**<br>REPAIR the short circuit. For additional information, refer to the wiring diagrams. CLEAR the DTC. TEST the system for normal operation.<br>**No**<br>Refer to the warranty policy and procedures manual if an ECM is suspect. |

## PINPOINT TEST C : INTAKE AIR TEMPERATURE (IAT) SENSOR CIRCUIT RANGE/PERFORMANCE, HIGH/LOW VOLTAGE

• NOTE: Before commencing this test, check the air filter for blockage and the engine air intake and breather systems for leaks.
REFER to: Intake Air Distribution and Filtering - VIN Range: N52048->N99999 (303-12B Intake Air Distribution and Filtering - V8 4.2L Petrol/V8 S/C 4.2L Petrol, Diagnosis and Testing).

| TEST CONDITIONS | DETAILS/RESULTS/ACTIONS |
|---|---|

**C1: CHECK THE IAT SENSOR SENSING CIRCUIT FOR HIGH RESISTANCE**

| | |
|---|---|
| | 1 Key off. |
| | 2 Disconnect the ECM electrical connector, PI300. |
| | 3 Disconnect the MAF sensor electrical connector, PI14. |
| | 4 Measure the resistance between: |

| ECM connector PI300, harness side | MAF connector PI14, harness side |
|---|---|
| Pin 66 | Pin 04 |

| | |
|---|---|
| | Is the resistance greater than 5 ohms?<br>**Yes**<br>REPAIR the high resistance circuit. For additional information, refer to the wiring diagrams. CLEAR the DTC. TEST the system for normal operation.<br>**No**<br>GO to C2. |

**C2: CHECK THE IAT SENSOR SENSING CIRCUIT FOR SHORT CIRCUIT TO POWER**

| | |
|---|---|
| | 1 Key on, engine off. |
| | 2 Measure the voltage between: |

| MAF connector PI14, harness side | Battery |
|---|---|
| Pin 04 | Negative terminal |

| | |
|---|---|
| | Is the voltage greater than 3 volts?<br>**Yes**<br>REPAIR the short circuit. For additional information, refer to the wiring diagrams. CLEAR the DTC. TEST the system for normal operation.<br>**No**<br>GO to C3. |

**C3: CHECK THE IAT SENSOR SENSING CIRCUIT FOR SHORT CIRCUIT TO GROUND**

| | |
|---|---|
| | 1 Key off. |
| | 2 Measure the resistance between: |

| MAF connector PI14, harness side | Battery |
|---|---|
| Pin 04 | Negative terminal |

| | |
|---|---|
| | Is the resistance less than 10,000 ohms?<br>**Yes**<br>REPAIR the short circuit. For additional information, refer to the wiring diagrams. CLEAR the DTC. TEST the system for normal operation.<br>**No**<br>INSTALL a new MAF sensor.<br>REFER to: Mass Air Flow (MAF) Sensor (303-14B Electronic Engine Controls - V8 4.2L Petrol/V8 S/C 4.2L Petrol, Removal and Installation).<br>CLEAR the DTC. TEST the system for normal operation. |

## PINPOINT TEST D : ENGINE COOLANT TEMPERATURE (ECT) SENSOR CIRCUIT RANGE/PERFORMANCE, HIGH/LOW VOLTAGE

• NOTE: Before commencing this test, check the coolant level and condition, check the operation of the thermostat, rectify as necessary.

| TEST CONDITIONS | DETAILS/RESULTS/ACTIONS |
|---|---|

**D1: CHECK THE ECT SENSOR SENSING CIRCUIT FOR HIGH RESISTANCE**

| | |
|---|---|
| | 1 Key off. |
| | 2 Disconnect the ECM electrical connector, PI300. |
| | 3 Disconnect the ECT sensor electrical connector, PI25. |
| | 4 Measure the resistance between: |

| ECM connector PI300, harness side | ECT sensor connector PI25, harness side |
|---|---|
| Pin 68 | Pin 02 |

| | |
|---|---|
| | Is the resistance greater than 5 ohms?<br>**Yes**<br>REPAIR the high resistance circuit. For additional information, refer to the wiring diagrams. CLEAR the DTC. TEST the system for normal operation.<br>**No**<br>GO to D2. |

**D2: CHECK THE ECT SENSOR SENSING CIRCUIT FOR SHORT CIRCUIT TO POWER**

| | |
|---|---|
| | 1 Key on, engine off. |

GETtheMANUALS.org

| | |
|---|---|
| | 2 Measure the voltage between: |

| ECT sensor connector PI25, harness side | Battery |
|---|---|
| Pin 02 | Negative terminal |

| | |
|---|---|
| | Is the voltage greater than 3 volts?<br>**Yes**<br>REPAIR the short circuit. For additional information, refer to the wiring diagrams. CLEAR the DTC. TEST the system for normal operation.<br>**No**<br>GO to D3. |

**D3: CHECK THE ECT SENSOR SENSING CIRCUIT FOR SHORT CIRCUIT TO GROUND**

| | |
|---|---|
| | 1 Turn the ignition switch to the OFF position. |
| | 2 Measure the resistance between: |

| ECT sensor connector PI25, harness side | Battery |
|---|---|
| Pin 02 | Negative terminal |

| | |
|---|---|
| | Is the resistance less than 10,000 ohms?<br>**Yes**<br>REPAIR the short circuit. For additional information, refer to the wiring diagrams. CLEAR the DTC. TEST the system for normal operation.<br>**No**<br>INSTALL a new ECT sensor.<br>REFER to: Engine Coolant Temperature (ECT) Sensor (303-14B Electronic Engine Controls - V8 4.2L Petrol/V8 S/C 4.2L Petrol, Removal and Installation).<br>CLEAR the DTC. TEST the system for normal operation. |

## PINPOINT TEST E : THROTTLE POSITION (TP) SENSOR RANGE/PERFORMANCE, HIGH/LOW VOLTAGE

| TEST CONDITIONS | DETAILS/RESULTS/ACTIONS |
|---|---|

**E1: CHECK THE TP SENSOR SENSING CIRCUIT TP1 FOR HIGH RESISTANCE**

| | |
|---|---|
| | 1 Key off. |
| | 2 Disconnect the ECM electrical connector, PI300. |
| | 3 Disconnect the TP sensor electrical connector, (vehicles with supercharger) PI26 or (vehicles without supercharger) PI303. |
| | 4 Measure the resistance between: |

**V8 Vehicles with supercharger**

| ECM connector PI300, harness side | TP sensor connector PI26, harness side |
|---|---|
| Pin 65 | Pin 06 |

**Vehicles without supercharger**

| ECM connector PI300, harness side | TP sensor connector PI303, harness side |
|---|---|
| Pin 65 | Pin 01 |

| | |
|---|---|
| | Is the resistance greater than 5 ohms?<br>**Yes**<br>REPAIR the high resistance circuit. For additional information, refer to the wiring diagrams. CLEAR the DTC. TEST the system for normal operation.<br>**No**<br>GO to E2. |

**E2: CHECK THE TP SENSOR SENSING CIRCUIT TP1 FOR SHORT CIRCUIT TO POWER**

| | |
|---|---|
| | 1 Key on, engine off. |
| | 2 Measure the voltage between: |

**Vehicles with supercharger**

| TP sensor connector PI26, harness side | Battery |
|---|---|
| Pin 06 | Negative terminal |

**Vehicles without supercharger**

| TP sensor connector PI303, harness side | Battery |
|---|---|
| Pin 01 | Negative terminal |

| | |
|---|---|
| | Is the voltage greater than 5 volts?<br>**Yes**<br>REPAIR the short circuit. For additional information, refer to the wiring diagrams. CLEAR the DTC. TEST the system for normal operation.<br>**No**<br>GO to E3. |

**E3: CHECK THE TP SENSOR SENSING CIRCUIT TP1 FOR SHORT CIRCUIT TO GROUND**

| | |
|---|---|
| | 1 Key off. |
| | 2 Measure the resistance between: |

**Vehicles with supercharger**

| TP sensor connector PI26, harness side | Battery |
|---|---|
| Pin 06 | Negative terminal |

**Vehicles without supercharger**

| TP sensor connector PI303, harness side | Battery |
|---|---|
| Pin 01 | Negative terminal |

| | |
|---|---|
| | Is the resistance less than 10,000 ohms?<br>**Yes**<br>REPAIR the short circuit. For additional information, refer to the wiring diagrams. CLEAR the DTC. TEST the system for normal operation.<br>**No**<br>INSTALL a new TP sensor.<br>REFER to: Throttle Body - Vehicles With: Supercharger, VIN Range: N52048->N99999 (303-04B Fuel Charging and Controls - V8 4.2L Petrol/V8 S/C 4.2L Petrol, Removal and Installation) /<br>Throttle Body - Vehicles Without: Supercharger, VIN Range: N52048->N99999 (303-04B Fuel Charging and Controls - V8 4.2L Petrol/V8 S/C 4.2L Petrol, Removal and Installation).<br>CLEAR the DTC. TEST the system for normal operation. |

## PINPOINT TEST F : THROTTLE POSITION (TP) SENSOR CIRCUIT TP2 HIGH/LOW VOLTAGE

GETtheMANUALS.org

| TEST CONDITIONS | DETAILS/RESULTS/ACTIONS |
|---|---|

**F1: CHECK TP SENSOR SENSING CIRCUIT TP2 FOR HIGH RESISTANCE**

1. Key off.
2. Disconnect the ECM electrical connector, PI300.
3. Disconnect the TP sensor electrical connector, (vehicles with supercharger) PI26 or (vehicles without supercharger) PI303.
4. Measure the resistance between:

**Vehicles with supercharger**

| ECM connector PI300, harness side | TP sensor connector PI26, harness side |
|---|---|
| Pin 67 | Pin 04 |

**Vehicles without supercharger**

| ECM connector PI300, harness side | TP sensor connector PI303, harness side |
|---|---|
| Pin 67 | Pin 03 |

Is the resistance greater than 5 ohms?

**Yes**

REPAIR the high resistance circuit. For additional information, refer to the wiring diagrams. CLEAR the DTC. TEST the system for normal operation.

**No**

GO to F2.

**F2: CHECK TP SENSOR SENSING CIRCUIT TP2 FOR SHORT CIRCUIT TO POWER**

1. Key on, engine off.
2. Measure the voltage between:

**Vehicles with supercharger**

| TP sensor connector PI26, harness side | Battery |
|---|---|
| Pin 04 | Positive terminal |

**Vehicles without supercharger**

| TP sensor connector PI303, harness side | Battery |
|---|---|
| Pin 03 | Positive terminal |

Is the voltage greater than 5 volts?

**Yes**

REPAIR the short circuit. For additional information, refer to the wiring diagrams. CLEAR the DTC. TEST the system for normal operation.

**No**

GO to F3.

**F3: CHECK TP SENSOR SENSING CIRCUIT TP2 FOR SHORT CIRCUIT TO GROUND**

1. Measure the resistance between:

**Vehicles with supercharger**

| TP sensor connector PI26, harness side | Battery |
|---|---|
| Pin 04 | Negative terminal |

**Vehicles without supercharger**

| TP sensor connector PI303, harness side | Battery |
|---|---|
| Pin 03 | Negative terminal |

Is the resistance less than 10,000 ohms?

**Yes**

REPAIR the short circuit. For additional information, refer to the wiring diagrams. CLEAR the DTC. TEST the system for normal operation.

**No**

INSTALL a new TP sensor.
REFER to: Throttle Body - Vehicles With: Supercharger, VIN Range: N52048->N99999 (303-04B Fuel Charging and Controls - V8 4.2L Petrol/V8 S/C 4.2L Petrol, Removal and Installation) /
Throttle Body - Vehicles Without: Supercharger, VIN Range: N52048->N99999 (303-04B Fuel Charging and Controls - V8 4.2L Petrol/V8 S/C 4.2L Petrol, Removal and Installation).
CLEAR the DTC. TEST the system for normal operation.

## PINPOINT TEST G : RIGHT-HAND H02S SENSING CIRCUIT LOW/HIGH CURRENT, SLOW RESPONSE, ECM CONTROL MALFUNCTION

CAUTION: Under no circumstances must the sensor wiring be cut to facilitate removal, should this prove necessary.

• NOTE: Before commencing this test, check the sensor connections and harness, check for exhaust leaks, (a very small exhaust leak can cause this DTC to flag. Check the EGR pipes for cracks/leaks) engine misfire, etc. See "visual inspection chart" and "possible causes".

| TEST CONDITIONS | DETAILS/RESULTS/ACTIONS |
|---|---|

**G1: CHECK THE H02S VARIABLE CIRCUIT FOR HIGH RESISTANCE**

1. Key off.
2. Disconnect the H02S electrical connector, PI10.
3. Disconnect the ECM electrical connector, PI300.
4. Measure the resistance between:

| ECM connector PI300, harness side | HO2S connector PI10, harness side |
|---|---|
| Pin 28 | Pin 04 |

Is the resistance greater than 5 ohms?

**Yes**

REPAIR the high resistance circuit. For additional information, refer to the wiring diagrams. CLEAR the DTC. TEST the system for normal operation.

**No**

GO to G2.

**G2: CHECK THE H02S VARIABLE CIRCUIT FOR SHORT CIRCUIT TO POWER**

1. Key on, engine off.
2. Measure the voltage between:

| HO2S connector PI10, harness side | Battery |
|---|---|
| Pin 04 | Negative terminal |

GETtheMANUALS.org

Is the voltage greater than 3 volts?

**Yes**

REPAIR the short circuit. For additional information, refer to the wiring diagrams. CLEAR the DTC. TEST the system for normal operation.

**No**

GO to G3.

**G3: CHECK THE H02S VARIABLE CIRCUIT FOR SHORT CIRCUIT TO GROUND**

1. Key off.
2. Measure the resistance between:

| HO2S connector PI10, harness side | Battery |
|---|---|
| Pin 04 | Negative terminal |

Is the resistance less than 10,000 ohms?

**Yes**

REPAIR the short circuit. For additional information, refer to the wiring diagrams. CLEAR the DTC. TEST the system for normal operation.

**No**

GO to G4.

**G4: CHECK THE H02S CONSTANT CIRCUIT FOR HIGH RESISTANCE**

1. Measure the resistance between:

| ECM connector PI300, harness side | HO2S connector PI10, harness side |
|---|---|
| Pin 29 | Pin 03 |

Is the resistance greater than 5 ohms?

**Yes**

REPAIR the high resistance circuit. For additional information, refer to the wiring diagrams. CLEAR the DTC. TEST the system for normal operation.

**No**

GO to G5.

**G5: CHECK THE H02S CONSTANT CIRCUIT FOR SHORT CIRCUIT TO POWER**

1. Measure the voltage between:

| HO2S connector PI10, harness side | Battery |
|---|---|
| Pin 03 | Negative terminal |

Is the voltage greater than 3 volts?

**Yes**

REPAIR the short circuit. For additional information, refer to the wiring diagrams. CLEAR the DTC. TEST the system for normal operation.

**No**

GO to G6.

**G6: CHECK THE H02S CONSTANT CIRCUIT FOR SHORT CIRCUIT TO GROUND**

1. Measure the resistance between:

| HO2S connector PI10, harness side | Battery |
|---|---|
| Pin 03 | Negative terminal |

Is the resistance less than 10,000 ohms?

**Yes**

REPAIR the short circuit. For additional information, refer to the wiring diagrams. CLEAR the DTC. TEST the system for normal operation.

**No**

INSTALL a new H02S.

REFER to: Heated Oxygen Sensor (HO2S) (303-14B Electronic Engine Controls - V8 4.2L Petrol/V8 S/C 4.2L Petrol, Removal and Installation).

CLEAR the DTC. TEST the system for normal operation. If the DTC is repeated, refer to the warranty policy and procedures manual if an ECM is suspect.

## PINPOINT TEST H : RIGHT-HAND H02S HEATER CONTROL CIRCUIT HIGH/LOW CURRENT

CAUTION: Under no circumstances must the sensor wiring be cut to facilitate removal, should this prove necessary.

• NOTE: Carry out a visual inspection of the HO2S connectors (integrity of connections may be affected by heat from catalytic converters).

| TEST CONDITIONS | DETAILS/RESULTS/ACTIONS |
|---|---|

**H1: CHECK H02S HEATER POWER SUPPLY CIRCUIT**

1. Key off.
2. Disconnect the H02S electrical connector, PI10.
3. Key on, engine off.
4. Make sure the O2S heater relay is engergized.
5. Measure the voltage between:

| HO2S connector PI10, harness side | Battery |
|---|---|
| Pin 01 | Negative terminal |

Is the voltage greater than 10 volts?

**Yes**

GO to H2.

**No**

REPAIR the power supply circuit to the H02S heater. This circuit includes the HO2S heater relay, fuse 20 of the front power distribution box, and the high power protection module. For additional information, refer to the wiring diagrams. CLEAR the DTC. TEST the system for normal operation.

**H2: CHECK H02S HEATER CONTROL CIRCUIT FROM ECM FOR HIGH RESISTANCE**

1. Key off.
2. Disconnect the ECM electrical connector, PI300.
3. Measure the resistance between:

| HO2S connector PI10, harness side | ECM connector PI300, harness side |
|---|---|
| Pin 02 | Pin 76 |

Is the resistance greater than 5 ohms?

**Yes**

REPAIR the high resistance circuit. For additional information, refer to the wiring diagrams. CLEAR the DTC. TEST the system for normal operation.

**No**

GO to H3.

GETtheMANUALS.org

**H3: CHECK H02S HEATER CONTROL CIRCUIT FROM ECM FOR SHORT CIRCUIT TO POWER**

| | |
|---|---|
| | 1 Key on, engine off.<br>2 Measure the voltage between: |

| HO2S connector PI10, harness side | Battery |
|---|---|
| Pin 02 | Negative terminal |

| | |
|---|---|
| | Is the voltage greater than 3 volts?<br>**Yes**<br>REPAIR the short circuit. For additional information, refer to the wiring diagrams. CLEAR the DTC. TEST the system for normal operation.<br>**No**<br>GO to H4. |

**H4: CHECK H02S HEATER CONTROL CIRCUIT FROM ECM FOR SHORT CIRCUIT TO GROUND**

| | |
|---|---|
| | 1 Key off.<br>2 Measure the resistance between: |

| HO2S connector PI10, harness side | Battery |
|---|---|
| Pin 02 | Negative terminal |

| | |
|---|---|
| | Is the resistance less than 10,000 ohms?<br>**Yes**<br>REPAIR the short circuit. For additional information, refer to the wiring diagrams. CLEAR the DTC. TEST the system for normal operation.<br>**No**<br>INSTALL a new H02S.<br>REFER to: Heated Oxygen Sensor (HO2S) (303-14B Electronic Engine Controls - V8 4.2L Petrol/V8 S/C 4.2L Petrol, Removal and Installation).<br>CLEAR the DTC. TEST the system for normal operation. If the DTC is repeated, refer to the warranty policy and procedures manual if an ECM is suspect. |

## PINPOINT TEST I : RIGHT-HAND CATALYST MONITOR SENSOR SENSING CIRCUIT LOW/HIGH VOLTAGE, NO ACTIVITY

CAUTION: Under no circumstances must the sensor wiring be cut to facilitate removal, should this prove necessary.

| TEST CONDITIONS | DETAILS/RESULTS/ACTIONS |
|---|---|

**I1: CHECK THE CATALYST MONITOR SENSOR SENSING CIRCUIT FOR HIGH RESISTANCE**

| | |
|---|---|
| | 1 Key off.<br>2 Disconnect the catalyst monitor sensor electrical connector, PI11.<br>3 Disconnect the ECM electrical connector, PI300.<br>4 Measure the resistance between: |

| Catalyst monitor sensor connector PI11, harness side | ECM connector PI300, harness side |
|---|---|
| Pin 04 | Pin 40 |

| | |
|---|---|
| | Is the resistance greater than 5 ohms?<br>**Yes**<br>REPAIR the high resistance circuit. For additional information, refer to the wiring diagrams. CLEAR the DTC. TEST the system for normal operation.<br>**No**<br>GO to I2. |

**I2: CHECK THE CATALYST MONITOR SENSOR SENSING CIRCUIT FOR SHORT CIRCUIT TO POWER**

| | |
|---|---|
| | 1 Key on, engine off.<br>2 Measure the voltage between: |

| Catalyst monitor sensor connector PI11, harness side | Battery |
|---|---|
| Pin 04 | Negative terminal |

| | |
|---|---|
| | Is the voltage greater than 3 volts?<br>**Yes**<br>REPAIR the short circuit. For additional information, refer to the wiring diagrams. CLEAR the DTC. TEST the system for normal operation.<br>**No**<br>GO to I3. |

**I3: CHECK THE CATALYST MONITOR SENSOR SENSING CIRCUIT FOR SHORT CIRCUIT TO GROUND**

| | |
|---|---|
| | 1 Key off.<br>2 Measure the resistance between: |

| Catalyst monitor sensor connector PI11, harness side | Battery |
|---|---|
| Pin 04 | Negative terminal |

| | |
|---|---|
| | Is the resistance less than 10,000 ohms?<br>**Yes**<br>REPAIR the short circuit. For additional information, refer to the wiring diagrams. CLEAR the DTC. TEST the system for normal operation.<br>**No**<br>GO to I4. |

**I4: CHECK THE CATALYST MONITOR SENSOR GROUND CIRCUIT FOR HIGH RESISTANCE**

| | |
|---|---|
| | 1 Measure the resistance between: |

| Catalyst monitor sensor connector PI11, harness side | ECM connector PI300, harness side |
|---|---|
| Pin 03 | Pin 22 |

| | |
|---|---|
| | Is the resistance greater than 5 ohms?<br>**Yes**<br>REPAIR the high resistance circuit. For additional information, refer to the wiring diagrams. CLEAR the DTC. TEST the system for normal operation.<br>**No**<br>INSTALL a new catalyst monitor sensor.<br>REFER to: Catalyst Monitor Sensor (303-14B Electronic Engine Controls - V8 4.2L Petrol/V8 S/C 4.2L Petrol, Removal and Installation).<br>CLEAR the DTC. TEST the system for normal operation. |

## PINPOINT TEST J : RIGHT-HAND CATALYST MONITOR SENSOR HEATER CONTROL CIRCUIT LOW/HIGH RESISTANCE

CAUTION: Under no circumstances must the sensor wiring be cut to facilitate removal, should this prove necessary.

GETtheMANUALS.org

| TEST CONDITIONS | DETAILS/RESULTS/ACTIONS |
|---|---|
| **J1: CHECK THE POWER SUPPLY TO THE CATALYST MONITOR HEATER** | |
| | 1 Key off. |
| | 2 Disconnect the catalyst monitor sensor electrical connector, PI11. |
| | 3 Key on, engine off. |
| | 4 Make sure the O2S heater relay is engergized. |
| | 5 Measure the voltage between: |

| Catalyst monitor sensor connector PI11, harness side | Battery |
|---|---|
| Pin 01 | Negative terminal |

| | |
|---|---|
| | Is the voltage greater than 10 volts?<br>**Yes**<br>GO to J2.<br>**No**<br>REPAIR the power supply circuit to the catalyst monitor sensor heater. This circuit includes the heater relay and fuse 20 of the front power distribution box. For additional information, refer to the wiring diagrams. CLEAR the DTC. TEST the system for normal operation. |
| **J2: CHECK THE CATALYST MONITOR HEATER CONTROL CIRCUIT FOR HIGH RESISTANCE** | |
| | 1 Key off. |
| | 2 Disconnect the ECM electrical connector, PI300. |
| | 3 Measure the resistance between: |

| Catalyst monitor sensor connector PI11, harness side | ECM connector PI300, harness side |
|---|---|
| Pin 02 | Pin 88 |

| | |
|---|---|
| | Is the resistance greater than 5 ohms?<br>**Yes**<br>REPAIR the high resistance circuit. For additional information, refer to the wiring diagrams. CLEAR the DTC. TEST the system for normal operation.<br>**No**<br>INSTALL a new catalyst monitor sensor.<br>REFER to: Catalyst Monitor Sensor (303-14B Electronic Engine Controls - V8 4.2L Petrol/V8 S/C 4.2L Petrol, Removal and Installation).<br>CLEAR the DTC. TEST the system for normal operation. If the DTC is repeated, refer to the warranty policy and procedures manual if an ECM is suspect. |

## PINPOINT TEST K : LEFT-HAND H02S SENSING CIRCUIT LOW/HIGH CURRENT, SLOW RESPONSE, ECM CONTROL MALFUNCTION

CAUTION: Under no circumstances must the sensor wiring be cut to facilitate removal, should this prove necessary.

• NOTE: Before commencing this test, check the sensor connections and harness, check for exhaust leaks, engine misfire, etc. See "visual inspection chart" and "possible causes".

| TEST CONDITIONS | DETAILS/RESULTS/ACTIONS |
|---|---|
| **K1: CHECK THE H02S VARIABLE CIRCUIT FOR HIGH RESISTANCE** | |
| | 1 Key off. |
| | 2 Disconnect the H02S electrical connector, PI12. |
| | 3 Disconnect the ECM electrical connector, PI300. |
| | 4 Measure the resistance between: |

| HO2S connector PI12, harness side | ECM connector PI300, harness side |
|---|---|
| Pin 04 | Pin 26 |

| | |
|---|---|
| | Is the resistance greater than 5 ohms?<br>**Yes**<br>REPAIR the high resistance circuit. For additional information, refer to the wiring diagrams. CLEAR the DTC. TEST the system for normal operation.<br>**No**<br>GO to K2. |
| **K2: CHECK THE H02S VARIABLE CIRCUIT FOR SHORT CIRCUIT TO POWER** | |
| | 1 Key on, engine off. |
| | 2 Measure the voltage between: |

| HO2S connector PI12, harness side | Battery |
|---|---|
| Pin 04 | Negative terminal |

| | |
|---|---|
| | Is the voltage greater than 3 volts?<br>**Yes**<br>REPAIR the short circuit. For additional information, refer to the wiring diagrams. CLEAR the DTC. TEST the system for normal operation.<br>**No**<br>GO to K3. |
| **K3: CHECK THE H02S VARIABLE CIRCUIT FOR SHORT CIRCUIT TO GROUND** | |
| | 1 Key off. |
| | 2 Measure the resistance between: |

| HO2S connector PI12, harness side | Battery |
|---|---|
| Pin 04 | Negative terminal |

| | |
|---|---|
| | Is the resistance less than 10,000 ohms?<br>**Yes**<br>REPAIR the short circuit. For additional information, refer to the wiring diagrams. CLEAR the DTC. TEST the system for normal operation.<br>**No**<br>GO to K4. |
| **K4: CHECK THE H02S CONSTANT CIRCUIT FOR HIGH RESISTANCE** | |
| | 1 Measure the resistance between: |

| HO2S connector PI12, harness side | ECM connector PI300, harness side |
|---|---|
| Pin 03 | Pin 27 |

GETtheMANUALS.org

Is the resistance greater than 5 ohms?

**Yes**

REPAIR the high resistance circuit. For additional information, refer to the wiring diagrams. CLEAR the DTC. TEST the system for normal operation.

**No**

GO to K5.

**K5: CHECK THE H02S CONSTANT CIRCUIT FOR SHORT CIRCUIT TO POWER**

1 Key on, engine off.

2 Measure the voltage between:

| HO2S connector PI12, harness side | Battery |
|---|---|
| Pin 03 | Negative terminal |

Is the voltage greater than 3 volts?

**Yes**

REPAIR the short circuit. For additional information, refer to the wiring diagrams. CLEAR the DTC. TEST the system for normal operation.

**No**

GO to K6.

**K6: CHECK THE H02S CONSTANT CIRCUIT FOR SHORT CIRCUIT TO GROUND**

1 Measure the resistance between:

| HO2S connector PI12, harness side | Battery |
|---|---|
| Pin 03 | Negative terminal |

Is the resistance less than 10,000 ohms?

**Yes**

REPAIR the short circuit. For additional information, refer to the wiring diagrams. CLEAR the DTC. TEST the system for normal operation.

**No**

INSTALL a new H02S.

REFER to: Heated Oxygen Sensor (HO2S) (303-14B Electronic Engine Controls - V8 4.2L Petrol/V8 S/C 4.2L Petrol, Removal and Installation).

CLEAR the DTC. TEST the system for normal operation. If the DTC is repeated, refer to the warranty policy and procedures manual if an ECM is suspect.

## PINPOINT TEST L : LEFT-HAND H02S HEATER CONTROL CIRCUIT HIGH/LOW CURRENT

CAUTION: Under no circumstances must the sensor wiring be cut to facilitate removal, should this prove necessary.

• NOTE: Carry out a visual inspection of the HO2S connectors (integrity of connections may be affected by heat from catalytic converters).

| TEST CONDITIONS | DETAILS/RESULTS/ACTIONS |
|---|---|

**L1: CHECK H02S HEATER POWER SUPPLY CIRCUIT**

1 Disconnect the H02S electrical connector, PI12.

2 Key on, engine off.

3 Make sure the O2S heater relay is engergized.

4 Measure the voltage between:

| HO2S connector PI12, harness side | Battery |
|---|---|
| Pin 01 | Negative terminal |

Is the voltage greater than 10 volts?

**Yes**

GO to L2.

**No**

REPAIR the power supply circuit to the H02S heater. This circuit includes the heater relay and fuse 35 of the front power distribution box. For additional information, refer to the wiring diagrams. CLEAR the DTC. TEST the system for normal operation.

**L2: CHECK H02S HEATER CONTROL CIRCUIT FROM ECM FOR HIGH RESISTANCE**

1 Key off.

2 Disconnect the ECM electrical connector, PI300.

3 Measure the resistance between:

| HO2S connector PI12, harness side | ECM connector PI300, harness side |
|---|---|
| Pin 02 | Pin 77 |

Is the resistance greater than 5 ohms?

**Yes**

REPAIR the high resistance circuit. For additional information, refer to the wiring diagrams. CLEAR the DTC. TEST the system for normal operation.

**No**

GO to L3.

**L3: CHECK H02S HEATER CONTROL CIRCUIT FROM ECM FOR SHORT CIRCUIT TO POWER**

1 Key on, engine off.

2 Measure the voltage between:

| HO2S connector PI12, harness side | Battery |
|---|---|
| Pin 02 | Negative terminal |

Is the voltage greater than 3 volts?

**Yes**

REPAIR the short circuit. For additional information, refer to the wiring diagrams. CLEAR the DTC. TEST the system for normal operation.

**No**

GO to L4.

**L4: CHECK H02S HEATER CONTROL CIRCUIT FROM ECM FOR SHORT CIRCUIT TO GROUND**

1 Measure the resistance between:

| HO2S connector PI12, harness side | Battery |
|---|---|
| Pin 02 | Negative terminal |

Is the resistance less than 10,000 ohms?

**Yes**

REPAIR the short circuit. For additional information, refer to the wiring diagrams. CLEAR the DTC. TEST the system for normal operation.

**No**

GETtheMANUALS.org

INSTALL a new H02S.

REFER to: Heated Oxygen Sensor (HO2S) (303-14B Electronic Engine Controls - V8 4.2L Petrol/V8 S/C 4.2L Petrol,

| | |
|---|---|
| | Removal and Installation).<br>CLEAR the DTC. TEST the system for normal operation. If the DTC is repeated, refer to the warranty policy and procedures manual if an ECM is suspect. |

## PINPOINT TEST M : LEFT-HAND CATALYST MONITOR SENSOR SENSING CIRCUIT LOW/HIGH VOLTAGE, NO ACTIVITY

CAUTION: Under no circumstances must the sensor wiring be cut to facilitate removal, should this prove necessary.

| TEST CONDITIONS | DETAILS/RESULTS/ACTIONS |
|---|---|
| **M1: CHECK THE CATALYST MONITOR SENSOR SENSING CIRCUIT FOR HIGH RESISTANCE** | |
| | 1 Key off. |
| | 2 Disconnect the catalyst monitor sensor electrical connector, PI13. |
| | 3 Disconnect the ECM electrical connector, PI300. |
| | 4 Measure the resistance between: |

| Catalyst monitor sensor PI13, harness side | ECM connector PI300, harness side |
|---|---|
| Pin 04 | Pin 41 |

| | |
|---|---|
| | Is the resistance greater than 5 ohms?<br>**Yes**<br>REPAIR the high resistance circuit. For additional information, refer to the wiring diagrams. CLEAR the DTC. TEST the system for normal operation.<br>**No**<br>GO to M2. |
| **M2: CHECK THE CATALYST MONITOR SENSOR SENSING CIRCUIT FOR SHORT CIRCUIT TO POWER** | |
| | 1 Key on, engine off. |
| | 2 Measure the voltage between: |

| Catalyst monitor sensor PI13, harness side | Battery |
|---|---|
| Pin 04 | Negative terminal |

| | |
|---|---|
| | Is the voltage greater than 3 volts?<br>**Yes**<br>REPAIR the short circuit. For additional information, refer to the wiring diagrams. CLEAR the DTC. TEST the system for normal operation.<br>**No**<br>GO to M3. |
| **M3: CHECK THE CATALYST MONITOR SENSOR SENSING CIRCUIT FOR SHORT CIRCUIT TO GROUND** | |
| | 1 Key off. |
| | 2 Measure the resistance between: |

| Catalyst monitor sensor PI13, harness side | Battery |
|---|---|
| Pin 04 | Negative terminal |

| | |
|---|---|
| | Is the resistance less than 10,000 ohms?<br>**Yes**<br>REPAIR the short circuit. For additional information, refer to the wiring diagrams. CLEAR the DTC. TEST the system for normal operation.<br>**No**<br>GO to M4. |
| **M4: CHECK THE CATALYST MONITOR SENSOR GROUND CIRCUIT FOR HIGH RESISTANCE** | |
| | 1 Measure the resistance between: |

| Catalyst monitor sensor PI13, harness side | ECM connector PI300, harness side |
|---|---|
| Pin 03 | Pin 45 |

| | |
|---|---|
| | Is the resistance greater than 5 ohms?<br>**Yes**<br>REPAIR the high resistance circuit. For additional information, refer to the wiring diagrams. CLEAR the DTC. TEST the system for normal operation.<br>**No**<br>INSTALL a new catalyst monitor sensor.<br>REFER to: Catalyst Monitor Sensor (303-14B Electronic Engine Controls - V8 4.2L Petrol/V8 S/C 4.2L Petrol, Removal and Installation).<br>CLEAR the DTC. TEST the system for normal operation. |

## PINPOINT TEST N : LEFT-HAND CATALYST MONITOR SENSOR HEATER CONTROL CIRCUIT LOW/HIGH RESISTANCE

CAUTION: Under no circumstances must the sensor wiring be cut to facilitate removal, should this prove necessary.

| TEST CONDITIONS | DETAILS/RESULTS/ACTIONS |
|---|---|
| **N1: CHECK THE POWER SUPPLY TO THE CATALYST MONITOR SENSOR HEATER** | |
| | 1 Disconnect the catalyst monitor sensor electrical connector, PI13. |
| | 2 Key on, engine off. |
| | 3 Make sure the O2S heater relay is engergized. |
| | 4 Measure the voltage between: |

| Catalyst monitor sensor connector PI13, harness side | Battery |
|---|---|
| Pin 01 | Negative terminal |

| | |
|---|---|
| | Is the voltage greater than 10 volts?<br>**Yes**<br>GO to N2.<br>**No**<br>REPAIR the power supply circuit to the catalyst monitor sensor heater. This circuit includes the heater relay and fuse 35 of the front power distribution box. For additional information, refer to the wiring diagrams. CLEAR the DTC. TEST the system for normal operation. |
| **N2: CHECK THE CATALYST MONITOR SENSOR HEATER CONTROL CIRCUIT FOR HIGH RESISTANCE** | |
| | 1 Key off. |
| | 2 Disconnect the ECM electrical connector, PI300. |
| | 3 Measure the resistance between: |

| Catalyst monitor sensor connector PI13, harness side | ECM connector PI300, harness side |
|---|---|
| Pin 02 | Pin 89 |

GETtheMANUALS.org

| | |
|---|---|
| | Is the resistance greater than 5 ohms?<br>**Yes**<br>REPAIR the high resistance circuit. For additional information, refer to the wiring diagrams. CLEAR the DTC. TEST the system for normal operation.<br>**No**<br>INSTALL a new catalyst monitor sensor.<br>REFER to: Catalyst Monitor Sensor (303-14B Electronic Engine Controls - V8 4.2L Petrol/V8 S/C 4.2L Petrol, Removal and Installation).<br>CLEAR the DTC. TEST the system for normal operation. If the DTC is repeated, refer to the warranty policy and procedures manual if an ECM is suspect. |

## PINPOINT TEST O : ENGINE OIL TEMPERATURE (EOT) SENSOR RANGE/PERFORMANCE, HIGH/LOW VOLTAGE

| TEST CONDITIONS | DETAILS/RESULTS/ACTIONS |
|---|---|
| **O1: CHECK THE EOT SENSOR SENSING CIRCUIT FOR HIGH RESISTANCE** | |
| | 1 Key off. |
| | 2 Disconnect the EOT sensor electrical connector, PI24. |
| | 3 Disconnect the ECM electrical connector, PI300. |
| | 4 Measure the resistance between: |

| EOT sensor connector PI24, harness side | ECM connector PI300, harness side |
|---|---|
| Pin 02 | Pin 23 |

| | |
|---|---|
| | Is the resistance greater than 5 ohms?<br>**Yes**<br>REPAIR the high resistance circuit. For additional information, refer to the wiring diagrams. CLEAR the DTC. TEST the system for normal operation.<br>**No**<br>GO to O2. |
| **O2: CHECK THE EOT SENSOR SENSING CIRCUIT FOR SHORT CIRCUIT TO POWER** | |
| | 1 Key on, engine off. |
| | 2 Measure the voltage between: |

| EOT sensor connector PI24, harness side | Battery |
|---|---|
| Pin 02 | Negative terminal |

| | |
|---|---|
| | Is the voltage greater than 3 volts?<br>**Yes**<br>REPAIR the short circuit. For additional information, refer to the wiring diagrams. CLEAR the DTC. TEST the system for normal operation.<br>**No**<br>GO to O3. |
| **O3: CHECK THE EOT SENSOR SENSING CIRCUIT FOR SHORT CIRCUIT TO GROUND** | |
| | 1 Measure the resistance between: |

| EOT sensor connector PI24, harness side | Battery |
|---|---|
| Pin 02 | Negative terminal |

| | |
|---|---|
| | Is the resistance less than 10,000 ohms?<br>**Yes**<br>REPAIR the short circuit. For additional information, refer to the wiring diagrams. CLEAR the DTC. TEST the system for normal operation.<br>**No**<br>GO to O4. |
| **O4: CHECK THE EOT SENSOR GROUND CIRCUIT FOR HIGH RESISTANCE** | |
| | 1 Measure the resistance between: |

| EOT sensor connector PI24, harness side | ECM connector PI300, harness side |
|---|---|
| Pin 01 | Pin 10 |

| | |
|---|---|
| | Is the resistance greater than 5 ohms?<br>**Yes**<br>REPAIR the high resistance circuit. This circuit includes harness splice, PIS49. For additional information, refer to the wiring diagrams. CLEAR the DTC. TEST the system for normal operation.<br>**No**<br>INSTALL a new EOT sensor.<br>REFER to: Oil Temperature Sensor (303-14B Electronic Engine Controls - V8 4.2L Petrol/V8 S/C 4.2L Petrol, Removal and Installation).<br>CLEAR the DTC. TEST the system for normal operation. If the DTC is repeated, refer to the warranty policy and procedures manual if an ECM is suspect. |

## PINPOINT TEST P : RIGHT-HAND KNOCK SENSOR (KS) HIGH/LOW VOLTAGE

• NOTE: Before commencing this test, make sure that the sensor is making a good electrical contact with the cylinder block. See "possible causes".

| TEST CONDITIONS | DETAILS/RESULTS/ACTIONS |
|---|---|
| **P1: CHECK KS SENSING CIRCUIT FOR HIGH RESISTANCE** | |
| | 1 Disconnect the KS electrical connector, PI19. |
| | 2 Disconnect the ECM electrical connector, PI300. |
| | 3 Measure the resistance between: |

| KS connector PI19, harness side | ECM connector PI300, harness side |
|---|---|
| Pin 04 | Pin 42 |

| | |
|---|---|
| | Is the resistance greater than 5 ohms?<br>**Yes**<br>REPAIR the high resistance circuit. For additional information, refer to the wiring diagrams. CLEAR the DTC. TEST the system for normal operation.<br>**No**<br>GO to P2. |
| **P2: CHECK KS SENSING CIRCUIT FOR SHORT CIRCUIT TO POWER** | |
| | 1 Key on, engine off. |
| | 2 Measure the voltage between: |

| KS connector PI19, harness side | Battery |
|---|---|
| Pin 04 | Negative terminal |

GETthemANUALS.org

| | |
|---|---|
| | Is the voltage greater than 3 volts?<br>**Yes**<br>REPAIR the short circuit. For additional information, refer to the wiring diagrams. CLEAR the DTC. TEST the system for normal operation.<br>**No**<br>GO to P3. |

**P3: CHECK KS SENSING CIRCUIT FOR SHORT CIRCUIT TO GROUND**

| | |
|---|---|
| | 1 Key off. |
| | 2 Measure the resistance between: |

| KS connector PI19, harness side | Battery |
|---|---|
| Pin 04 | Negative terminal |

| | |
|---|---|
| | Is the resistance less than 10,000 ohms?<br>**Yes**<br>REPAIR the short circuit. For additional information, refer to the wiring diagrams. CLEAR the DTC. TEST the system for normal operation.<br>**No**<br>GO to P4. |

**P4: CHECK KS GROUND CIRCUIT FOR HIGH RESISTANCE**

| | |
|---|---|
| | 1 Measure the resistance between: |

| KS connector PI19, harness side | ECM connector PI300, harness side |
|---|---|
| Pin 03 | Pin 19 |

| | |
|---|---|
| | Is the resistance greater than 5 ohms?<br>**Yes**<br>REPAIR the high resistance circuit. For additional information, refer to the wiring diagrams. CLEAR the DTC. TEST the system for normal operation.<br>**No**<br>INSTALL a new KS.<br>REFER to: Knock Sensor (KS) LH (303-14B Electronic Engine Controls - V8 4.2L Petrol/V8 S/C 4.2L Petrol, Removal and Installation).<br>CLEAR the DTC. TEST the system for normal operation. |

## PINPOINT TEST Q : LEFT-HAND KNOCK SENSOR (KS) HIGH/LOW VOLTAGE

• NOTE: Before commencing this test, make sure that the sensor is making a good electrical contact with the cylinder block. See "possible causes".

| TEST CONDITIONS | DETAILS/RESULTS/ACTIONS |
|---|---|

**Q1: CHECK KS SENSING CIRCUIT FOR HIGH RESISTANCE**

| | |
|---|---|
| | 1 Disconnect the KS electrical connector, PI19. |
| | 2 Disconnect the ECM electrical connector, PI300. |
| | 3 Measure the resistance between: |

| KS connector PI19, harness side | ECM connector PI300, harness side |
|---|---|
| Pin 02 | Pin 43 |

| | |
|---|---|
| | Is the resistance greater than 5 ohms?<br>**Yes**<br>REPAIR the high resistance circuit. For additional information, refer to the wiring diagrams. CLEAR the DTC. TEST the system for normal operation.<br>**No**<br>GO to Q2. |

**Q2: CHECK KS SENSING CIRCUIT FOR SHORT CIRCUIT TO POWER**

| | |
|---|---|
| | 1 Key on, engine off. |
| | 2 Measure the voltage between: |

| KS connector PI19, harness side | Battery |
|---|---|
| Pin 02 | Negative terminal |

| | |
|---|---|
| | Is the voltage greater than 3 volts?<br>**Yes**<br>REPAIR the short circuit. For additional information, refer to the wiring diagrams. CLEAR the DTC. TEST the system for normal operation.<br>**No**<br>GO to Q3. |

**Q3: CHECK KS SENSING CIRCUIT FOR SHORT CIRCUIT TO GROUND**

| | |
|---|---|
| | 1 Key off. |
| | 2 Measure the resistance between: |

| KS connector PI19, harness side | Battery |
|---|---|
| Pin 02 | Negative terminal |

| | |
|---|---|
| | Is the resistance less than 10,000 ohms?<br>**Yes**<br>REPAIR the short circuit. For additional information, refer to the wiring diagrams. CLEAR the DTC. TEST the system for normal operation.<br>**No**<br>GO to Q4. |

**Q4: CHECK KS GROUND CIRCUIT FOR HIGH RESISTANCE**

| | |
|---|---|
| | 1 Measure the resistance between: |

| KS connector PI19, harness side | ECM connector PI300, harness side |
|---|---|
| Pin 01 | Pin 20 |

| | |
|---|---|
| | Is the resistance greater than 5 ohms?<br>**Yes**<br>REPAIR the high resistance circuit. For additional information, refer to the wiring diagrams. CLEAR the DTC. TEST the system for normal operation.<br>**No**<br>INSTALL a new KS.<br>REFER to: Knock Sensor (KS) LH (303-14B Electronic Engine Controls - V8 4.2L Petrol/V8 S/C 4.2L Petrol, Removal and Installation).<br>CLEAR the DTC. TEST the system for normal operation. |

## PINPOINT TEST R : CRANKSHAFT POSITION (CKP) SENSOR CIRCUIT RANGE/PERFORMANCE, CIRCUIT MALFUNCTION

GETtheMANUALS.org

• NOTE: The clearance between the CKP sensor and the reluctor ring should be checked at 90° intervals. The air gap between the two should be no greater than 4.5 mm at any point.

| TEST CONDITIONS | DETAILS/RESULTS/ACTIONS |
|---|---|
| **R1: CHECK THE CKP SENSOR FOR CORRECT INSTALLATION** | |
| | 1 Key off. |
| | 2 Check the CKP sensor for correct installation. |
| | Is the CKP sensor correctly installed?<br>**Yes**<br>GO to R2.<br>**No**<br>INSTALL the CKP sensor correctly.<br>REFER to: Crankshaft Position (CKP) Sensor (303-14B Electronic Engine Controls - V8 4.2L Petrol/V8 S/C 4.2L Petrol, Removal and Installation).<br>Reconnect the sensor. CLEAR the DTCs. TEST the system for normal operation. |
| **R2: CHECK THE CKP SENSOR FOR DEBRIS** | |
| | 1 Remove the CKP sensor and inspect for debris. |
| | Is the CKP sensor free of debris?<br>**Yes**<br>GO to R3.<br>**No**<br>CLEAN the sensor and wheel. INSTALL the sensor.<br>REFER to: Crankshaft Position (CKP) Sensor (303-14B Electronic Engine Controls - V8 4.2L Petrol/V8 S/C 4.2L Petrol, Removal and Installation).<br>Reconnect the sensor. CLEAR the DTCs. TEST the system for normal operation. |
| **R3: CHECK THE CKP SENSOR SENSING CIRCUIT FOR HIGH RESISTANCE** | |
| | 1 Disconnect the ECM electrical connector, PI300. |
| | 2 Disconnect the CKP sensor electrical connector, PI21. |
| | 3 Measure the resistance between: |

| CKP sensor connector PI21, harness side | ECM connector PI300, harness side |
|---|---|
| Pin 02 | Pin 30 |

| TEST CONDITIONS | DETAILS/RESULTS/ACTIONS |
|---|---|
| | Is the resistance greater than 5 ohms?<br>**Yes**<br>REPAIR the high resistance circuit. For additional information, refer to the wiring diagrams. CLEAR the DTC. TEST the system for normal operation.<br>**No**<br>GO to R4. |
| **R4: CHECK THE CKP SENSOR SENSING CIRCUIT FOR SHORT CIRCUIT TO POWER** | |
| | 1 Key on, engine off. |
| | 2 Measure the voltage between: |

| CKP sensor connector PI21, harness side | Battery |
|---|---|
| Pin 02 | Negative terminal |

| TEST CONDITIONS | DETAILS/RESULTS/ACTIONS |
|---|---|
| | Is the voltage greater than 3 volts?<br>**Yes**<br>REPAIR the short circuit. For additional information, refer to the wiring diagrams. CLEAR the DTC. TEST the system for normal operation.<br>**No**<br>GO to R5. |
| **R5: CHECK THE CKP SENSOR SENSING CIRCUIT FOR SHORT CIRCUIT TO GROUND** | |
| | 1 Key off. |
| | 2 Measure the resistance between: |

| CKP sensor connector PI21, harness side | Battery |
|---|---|
| Pin 02 | Negative terminal |

| TEST CONDITIONS | DETAILS/RESULTS/ACTIONS |
|---|---|
| | Is the resistance less than 10,000 ohms?<br>**Yes**<br>REPAIR the short circuit. For additional information, refer to the wiring diagrams. CLEAR the DTC. TEST the system for normal operation.<br>**No**<br>GO to R6. |
| **R6: CHECK THE CKP SENSOR GROUND CIRCUIT FOR HIGH RESISTANCE** | |
| | 1 Measure the resistance between: |

| CKP sensor connector PI21, harness side | ECM connector PI300, harness side |
|---|---|
| Pin 01 | Pin 06 |

| TEST CONDITIONS | DETAILS/RESULTS/ACTIONS |
|---|---|
| | Is the resistance greater than 5 ohms?<br>**Yes**<br>REPAIR the high resistance circuit. For additional information, refer to the wiring diagrams. CLEAR the DTC. TEST the system for normal operation.<br>**No**<br>INSTALL a new CKP sensor.<br>REFER to: Crankshaft Position (CKP) Sensor (303-14B Electronic Engine Controls - V8 4.2L Petrol/V8 S/C 4.2L Petrol, Removal and Installation).<br>CLEAR the DTC. TEST the system for normal operation. |

## PINPOINT TEST S : RIGHT-HAND CAMSHAFT POSITION (CMP) SENSOR CIRCUIT RANGE/PERFORMANCE, CIRCUIT MALFUNCTION

| TEST CONDITIONS | DETAILS/RESULTS/ACTIONS |
|---|---|
| **S1: CHECK THE CMP SENSOR FOR CORRECT INSTALLATION** | |
| | 1 Key off. |
| | 2 Check the CMP sensor for correct installation. |
| | Is the CMP sensor correctly installed?<br>**Yes**<br>GO to S2.<br>**No**<br>INSTALL the CMP sensor correctly.<br>REFER to: Camshaft Position (CMP) Sensor RH (303-14B Electronic Engine Controls - V8 4.2L Petrol/V8 S/C 4.2L |

GETtheMANUALS.org

Petrol, Removal and Installation).
CLEAR the DTCs. TEST the system for normal operation.

**S2: CHECK THE CMP SENSOR FOR FOREIGN DEBRIS**

1 Remove the CMP sensor and inspect for foreign debris.

Is the CMP sensor free of foreign debris?

**Yes**

GO to S3.

**No**

CLEAN the sensor and wheel. INSTALL the sensor.
REFER to: Camshaft Position (CMP) Sensor RH (303-14B Electronic Engine Controls - V8 4.2L Petrol/V8 S/C 4.2L Petrol, Removal and Installation).
CLEAR the DTCs. TEST the system for normal operation.

**S3: CHECK THE CMP SENSOR SENSING CIRCUIT FOR HIGH RESISTANCE**

1 Disconnect the CMP sensor electrical connector, PI23.

2 Disconnect the ECM electrical connector, PI300.

3 Measure the resistance between:

| CMP sensor connector PI23, harness side | ECM connector PI300, harness side |
|---|---|
| Pin 02 | Pin 34 |

Is the resistance greater than 5 ohms?

**Yes**

REPAIR the high resistance circuit. For additional information, refer to the wiring diagrams. CLEAR the DTC. TEST the system for normal operation.

**No**

GO to S4.

**S4: CHECK THE CMP SENSOR SENSING CIRCUIT FOR SHORT CIRCUIT TO POWER**

1 Key on, engine off.

2 Measure the voltage between:

| CMP sensor connector PI23, harness side | Battery |
|---|---|
| Pin 02 | Negative terminal |

Is the voltage greater than 3 volts?

**Yes**

REPAIR the short circuit. For additional information, refer to the wiring diagrams. CLEAR the DTC. TEST the system for normal operation.

**No**

GO to S5.

**S5: CHECK THE CMP SENSOR SENSING CIRCUIT FOR SHORT CIRCUIT TO GROUND**

1 Key off.

2 Measure the resistance between:

| CMP sensor connector PI23, harness side | Battery |
|---|---|
| Pin 02 | Negative terminal |

Is the resistance less than 10,000 ohms?

**Yes**

REPAIR the short circuit. For additional information, refer to the wiring diagrams. CLEAR the DTC. TEST the system for normal operation.

**No**

GO to S6.

**S6: CHECK THE CMP SENSOR GROUND CIRCUIT FOR HIGH RESISTANCE**

1 Measure the resistance between:

| CMP sensor connector PI23, harness side | ECM connector PI300, harness side |
|---|---|
| Pin 01 | Pin 07 |

Is the resistance greater than 5 ohms?

**Yes**

REPAIR the high resistance circuit. For additional information, refer to the wiring diagrams. CLEAR the DTC. TEST the system for normal operation.

**No**

INSTALL a new CMP sensor.
REFER to: Camshaft Position (CMP) Sensor RH (303-14B Electronic Engine Controls - V8 4.2L Petrol/V8 S/C 4.2L Petrol, Removal and Installation).
CLEAR the DTC. TEST the system for normal operation.

## PINPOINT TEST T : LEFT-HAND CAMSHAFT POSITION (CMP) SENSOR CIRCUIT MALFUNCTION RANGE/PERFORMANCE

| TEST CONDITIONS | DETAILS/RESULTS/ACTIONS |
|---|---|

**T1: CHECK THE CMP SENSOR FOR CORRECT INSTALLATION**

1 Check the CMP sensor for correct installation.

Is the CMP sensor correctly installed?

**Yes**

GO to T2.

**No**

INSTALL the CMP sensor correctly.
REFER to: Camshaft Position (CMP) Sensor LH (303-14B Electronic Engine Controls - V8 4.2L Petrol/V8 S/C 4.2L Petrol, Removal and Installation).
CLEAR the DTCs. TEST the system for normal operation.

**T2: CHECK THE CMP SENSOR FOR FOREIGN DEBRIS**

1 Remove the CMP sensor and inspect for foreign debris.

Is the CMP sensor free of foreign debris?

**Yes**

GO to T3.

**No**

CLEAN the sensor and wheel. INSTALL the sensor.
REFER to: Camshaft Position (CMP) Sensor LH (303-14B Electronic Engine Controls - V8 4.2L Petrol/V8 S/C 4.2L Petrol, Removal and Installation).
CLEAR the DTCs. TEST the system for normal operation.

**T3: CHECK THE CMP SENSOR SENSING CIRCUIT FOR HIGH RESISTANCE**

1 Key off.

CETtle MANUALS.org

| | |
|---|---|
| | 2 Disconnect the CMP sensor electrical connector, PI22. |
| | 3 Disconnect the ECM electrical connector, PI300. |
| | 4 Measure the resistance between: |

| CMP sensor connector PI22, harness side | ECM connector PI300, harness side |
|---|---|
| Pin 01 | Pin 33 |

| | |
|---|---|
| | Is the resistance greater than 5 ohms?<br>**Yes**<br>REPAIR the high resistance circuit. For additional information, refer to the wiring diagrams. CLEAR the DTC. TEST the system for normal operation.<br>**No**<br>GO to T4. |

**T4: CHECK THE CMP SENSOR SENSING CIRCUIT FOR SHORT CIRCUIT TO POWER**

| | |
|---|---|
| | 1 Key on, engine off. |
| | 2 Measure the voltage between: |

| CMP sensor connector PI22, harness side | Battery |
|---|---|
| Pin 01 | Negative terminal |

| | |
|---|---|
| | Is the voltage greater than 3 volts?<br>**Yes**<br>REPAIR the short circuit. For additional information, refer to the wiring diagrams. CLEAR the DTC. TEST the system for normal operation.<br>**No**<br>GO to T5. |

**T5: CHECK THE CMP SENSOR SENSING CIRCUIT FOR SHORT CIRCUIT TO GROUND**

| | |
|---|---|
| | 1 Key off. |
| | 2 Measure the resistance between: |

| CMP sensor connector PI22, harness side | Battery |
|---|---|
| Pin 01 | Negative terminal |

| | |
|---|---|
| | Is the resistance less than 10,000 ohms?<br>**Yes**<br>REPAIR the short circuit. For additional information, refer to the wiring diagrams. CLEAR the DTC. TEST the system for normal operation.<br>**No**<br>GO to T6. |

**T6: CHECK THE CMP SENSOR GROUND CIRCUIT FOR HIGH RESISTANCE**

| | |
|---|---|
| | 1 Measure the resistance between: |

| CMP sensor connector PI22, harness side | ECM connector PI300, harness side |
|---|---|
| Pin 02 | Pin 08 |

| | |
|---|---|
| | Is the resistance greater than 5 ohms?<br>**Yes**<br>REPAIR the high resistance circuit. For additional information, refer to the wiring diagrams. CLEAR the DTC. TEST the system for normal operation.<br>**No**<br>INSTALL a new CMP sensor.<br>REFER to: Camshaft Position (CMP) Sensor LH (303-14B Electronic Engine Controls - V8 4.2L Petrol/V8 S/C 4.2L Petrol, Removal and Installation).<br>CLEAR the DTC. TEST the system for normal operation. |

## PINPOINT TEST U : RADIATOR COOLING FAN MODULE DRIVE CIRCUIT MALFUNCTION

| TEST CONDITIONS | DETAILS/RESULTS/ACTIONS |
|---|---|

**U1: CHECK THE RADIATOR FAN MODULE PERMANENT SUPPLY**

| | |
|---|---|
| | 1 Disconnect the fan module electrical connector, FH109. |
| | 2 Measure the voltage between: |

| Fan module connector FH109, harness side | Battery |
|---|---|
| Pin 01 | Negative terminal |

| | |
|---|---|
| | Is the voltage less than 10 volts?<br>**Yes**<br>REPAIR the circuit between the cooling fan module and battery. This circuit includes fuse 13 of the front power distribution box (80A) and the mega fuses. For additional information, refer to the wiring diagrams. CLEAR the DTC. TEST the system for normal operation.<br>**No**<br>Reconnect electrical connector, GCU04.GO to U2. |

**U2: CHECK THE RADIATOR FAN MODULE GROUND**

| | |
|---|---|
| | 1 Measure the resistance between: |

| Fan module connector FH109, harness side | Battery |
|---|---|
| Pin 02 | Negative terminal |

| | |
|---|---|
| | Is the resistance greater than 5 ohms?<br>**Yes**<br>REPAIR the high resistance circuit. For additional information, refer to the wiring diagrams. CLEAR the DTC. TEST the system for normal operation.<br>**No**<br>GO to U3. |

**U3: CHECK THE RADIATOR FAN MODULE EMS SWITCHED SUPPLY**

| | |
|---|---|
| | 1 Disconnect the fan module electrical connector, FH108. |
| | 2 Key on, engine off. |
| | 3 Make sure the EMS relay is engaged. |
| | 4 Measure the voltage between: |

| Fan module connector FH108, harness side | Battery |
|---|---|
| Pin 02 | Negative terminal |

| | |
|---|---|
| | Is the voltage less than 10 volts?<br>**Yes**<br>REPAIR the circuit between the cooling fan module and battery. This circuit includes fuse 38 of the front power distribution box and the EMS control relay. For additional information, refer to the wiring diagrams. CLEAR the DTC. TEST the system for normal operation.<br>**No** |

GETtheMANUALS.org

GO to U4.

**U4: CHECK THE ECM TO RADIATOR FAN MODULE CIRCUIT FOR HIGH RESISTANCE**

1. Key off.
2. Disconnect the ECM electrical connector, FH300.
3. Measure the resistance between:

| Fan module connector FH108, harness side | ECM connector FH300, harness side |
|---|---|
| Pin 01 | Pin 49 |

Is the resistance greater than 5 ohms?

**Yes**

REPAIR the high resistance circuit. For additional information, refer to the wiring diagrams. CLEAR the DTC. TEST the system for normal operation.

**No**

GO to U5.

**U5: CHECK THE ECM TO RADIATOR FAN MODULE CIRCUIT FOR SHORT CIRCUIT TO POWER**

1. Key on, engine off.
2. Measure the voltage between:

| Fan module connector FH108, harness side | Battery |
|---|---|
| Pin 01 | Negative terminal |

Is the voltage greater than 3 volts?

**Yes**

REPAIR the short circuit. For additional information, refer to the wiring diagrams. CLEAR the DTC. TEST the system for normal operation.

**No**

GO to U6.

**U6: CHECK THE ECM TO RADIATOR FAN MODULE CIRCUIT FOR SHORT CIRCUIT TO GROUND**

1. Key off.
2. Measure the resistance between:

| Fan module connector FH108, harness side | Battery |
|---|---|
| Pin 01 | Negative terminal |

Is the resistance less than 10,000 ohms?

**Yes**

REPAIR the short circuit. For additional information, refer to the wiring diagrams. CLEAR the DTC. TEST the system for normal operation.

**No**

INSTALL a new radiator cooling fan module. CLEAR the DTC. TEST the system for normal operation.

## PINPOINT TEST V : BATTERY POWER SUPPLY VOLTAGE MALFUNCTION

| TEST CONDITIONS | DETAILS/RESULTS/ACTIONS |
|---|---|

**V1: CHECK THE BATTERY POWER SUPPLY TO THE ECM**

1. Disconnect the ECM electrical connector, FH300.
2. Measure the voltage between:

| ECM connector PI300, harness side | Battery |
|---|---|
| Pin 54 | Negative terminal |

Is the voltage greater than 10 volts?

**Yes**

Recheck the DTCs.

**No**

REPAIR the battery power supply circuit. This circuit includes fuse 33 of the front power distribution box. For additional information, refer to the wiring diagrams. CLEAR the DTC. TEST the system for normal operation.

## PINPOINT TEST W : ACCELERATOR PEDAL POSITION (APP) SENSOR SENSING CIRCUIT 1 HIGH/LOW VOLTAGE

| TEST CONDITIONS | DETAILS/RESULTS/ACTIONS |
|---|---|

**W1: CHECK THE APP SENSOR SENSING CIRCUIT 1 FOR HIGH RESISTANCE**

1. Key off.
2. Disconnect the ECM electrical connector, FH300.
3. Disconnect the APP sensor electrical connector, CA88.
4. Measure the resistance between:

| ECM connector FH300, harness side | APP sensor connector CA88, harness side |
|---|---|
| Pin 24 | Pin 04 |

Is the resistance greater than 5 ohms?

**Yes**

REPAIR the high resistance circuit. For additional information, refer to the wiring diagrams. CLEAR the DTC. TEST the system for normal operation.

**No**

GO to W2.

**W2: CHECK THE APP SENSOR SENSING CIRCUIT 1 FOR SHORT CIRCUIT TO POWER**

1. Key on, engine off.
2. Measure the voltage between:

| APP sensor connector CA88, harness side | Battery |
|---|---|
| Pin 04 | Negative terminal |

Is the voltage greater than 3 volts?

**Yes**

REPAIR the short circuit. For additional information, refer to the wiring diagrams. CLEAR the DTC. TEST the system for normal operation.

**No**

GO to W3.

**W3: CHECK THE APP SENSOR SENSING CIRCUIT 1 FOR SHORT CIRCUIT TO GROUND**

1. Key off.
2. Measure the resistance between:

| APP sensor connector CA88, harness side | Battery |
|---|---|
| Pin 04 | Negative terminal |

GETtheMANUALS.org

Is the resistance less than 10,000 ohms?

**Yes**

REPAIR the short circuit. For additional information, refer to the wiring diagrams. CLEAR the DTC. TEST the system for normal operation.

**No**

GO to W4.

**W4: CHECK THE APP SENSOR GROUND CIRCUIT 1 FOR HIGH RESISTANCE**

1. Measure the resistance between:

| APP sensor connector CA88, harness side | ECM connector FH300, harness side |
|---|---|
| Pin 06 | Pin 08 |

Is the resistance greater than 5 ohms?

**Yes**

REPAIR the high resistance circuit. For additional information, refer to the wiring diagrams. CLEAR the DTC. TEST the system for normal operation.

**No**

GO to W5.

**W5: CHECK THE APP SENSOR SUPPLY VOLTAGE AT THE SENSOR**

1. Reconnect the ECM electrical connector, FH300.
2. Key on, engine off.
3. Measure the voltage between:

| APP sensor connector CA88, harness side | Battery |
|---|---|
| Pin 05 | Negative terminal |

Is the voltage less than 4 volts?

**Yes**

GO to W6.

**No**

INSTALL a new APP sensor.
REFER to: Accelerator Pedal (310-02 Acceleration Control, Removal and Installation).
CLEAR the DTC. TEST the system for normal operation.

**W6: CHECK THE APP SENSOR SUPPLY VOLTAGE CIRCUIT FOR HIGH RESISTANCE**

1. Key off.
2. Disconnect the ECM electrical connector, FH300.
3. Measure the resistance between:

| APP sensor connector CA88, harness side | ECM connector FH300, harness side |
|---|---|
| Pin 05 | Pin 19 |

Is the resistance greater than 5 ohms?

**Yes**

REPAIR the high resistance circuit. For additional information, refer to the wiring diagrams. CLEAR the DTC. TEST the system for normal operation.

**No**

Check the ECM power supplies (recheck DTCs).

## PINPOINT TEST X : ACCELERATOR PEDAL POSITION (APP) SENSOR SENSING CIRCUIT 2 HIGH/LOW VOLTAGE

| TEST CONDITIONS | DETAILS/RESULTS/ACTIONS |
|---|---|

**X1: CHECK THE APP SENSOR SENSING CIRCUIT 2 FOR HIGH RESISTANCE**

1. Key off.
2. Disconnect the APP sensor electrical connector, CA88.
3. Disconnect the ECM electrical connector, FH300.
4. Measure the resistance between:

| APP sensor connector CA88, harness side | ECM connector FH300, harness side |
|---|---|
| Pin 01 | Pin 38 |

Is the resistance greater than 5 ohms?

**Yes**

REPAIR the high resistance circuit. For additional information, refer to the wiring diagrams. CLEAR the DTC. TEST the system for normal operation.

**No**

GO to X2.

**X2: CHECK THE APP SENSOR SENSING CIRCUIT 2 FOR SHORT CIRCUIT TO POWER**

1. Key on, engine off.
2. Measure the voltage between:

| APP sensor connector CA88, harness side | Battery |
|---|---|
| Pin 01 | Negative terminal |

Is the voltage greater than 3 volts?

**Yes**

REPAIR the short circuit. For additional information, refer to the wiring diagrams. CLEAR the DTC. TEST the system for normal operation.

**No**

GO to X3.

**X3: CHECK THE APP SENSOR SENSING CIRCUIT 2 FOR SHORT CIRCUIT TO GROUND**

1. Key off.
2. Measure the resistance between:

| APP sensor connector CA88, harness side | Battery |
|---|---|
| Pin 01 | Negative terminal |

Is the resistance less than 10,000 ohms?

**Yes**

REPAIR the short circuit. For additional information, refer to the wiring diagrams. CLEAR the DTC. TEST the system for normal operation.

**No**

GO to X4.

**X4: CHECK THE APP SENSOR GROUND CIRCUIT 2 FOR HIGH RESISTANCE**

1. Measure the resistance between:

| APP sensor connector CA88, harness side | ECM connector FH300, harness side |
|---|---|
| Pin 03 | Pin 07 |

GETtheMANUALS.org

Is the resistance greater than 5 ohms?

**Yes**

REPAIR the high resistance circuit. For additional information, refer to the wiring diagrams. CLEAR the DTC. TEST the system for normal operation.

**No**

GO to X5.

**X5: CHECK THE APP SENSOR SUPPLY VOLTAGE AT THE SENSOR**

1. Reconnect the ECM electrical connector, FH300.
2. Key on, engine off.
3. Measure the voltage between:

| APP sensor connector CA88, harness side | Battery |
|---|---|
| Pin 02 | Negative terminal |

Is the voltage less than 4 volts?

**Yes**

GO to X6.

**No**

INSTALL a new APP sensor.
REFER to: Accelerator Pedal (310-02 Acceleration Control, Removal and Installation).
CLEAR the DTC. TEST the system for normal operation.

**X6: CHECK THE APP SENSOR SUPPLY VOLTAGE CIRCUIT FOR HIGH RESISTANCE**

1. Key off.
2. Disconnect the ECM electrical connector, FH300.
3. Measure the resistance between:

| APP sensor connector CA88, harness side | ECM connector FH300, harness side |
|---|---|
| Pin 02 | Pin 32 |

Is the resistance greater than 5 ohms?

**Yes**

REPAIR the high resistance circuit. For additional information, refer to the wiring diagrams. CLEAR the DTC. TEST the system for normal operation.

**No**

Check the ECM power supplies (recheck DTCs).

## PINPOINT TEST Y : THROTTLE MOTOR CONTROL CIRCUIT MALFUNCTION

| TEST CONDITIONS | DETAILS/RESULTS/ACTIONS |
|---|---|

**Y1: CHECK THE THROTTLE MOTOR NEGATIVE TO ECM CIRCUIT FOR HIGH RESISTANCE**

1. Key off.
2. Disconnect the throttle motor electrical connector, (vehicles with supercharger) PI26 or (vehicles without supercharger) PI303.
3. Disconnect the ECM electrical connector, PI300.
4. Measure the resistance between:

**Vehicles with supercharger**

| Throttle motor connector PI26, harness side | ECM connector PI300,harness side |
|---|---|
| Pin 02 | Pin 74 |

**Vehicles without supercharger**

| Throttle motor connector PI303, harness side | ECM connector PI300,harness side |
|---|---|
| Pin 06 | Pin 74 |

Is the resistance greater than 5 ohms?

**Yes**

REPAIR the high resistance circuit. For additional information, refer to the wiring diagrams. CLEAR the DTC. TEST the system for normal operation.

**No**

GO to Y2.

**Y2: CHECK THE THROTTLE MOTOR POWER SUPPLY CIRCUIT FOR HIGH RESISTANCE**

1. Measure the resistance between:

**Vehicles with supercharger**

| Throttle motor connector PI26, harness side | ECM connector PI300,harness side |
|---|---|
| Pin 01 | Pin 75 |

**Vehicles without supercharger**

| Throttle motor connector PI303, harness side | ECM connector PI300,harness side |
|---|---|
| Pin 05 | Pin 75 |

Is the resistance greater than 5 ohms?

**Yes**

REPAIR the high resistance circuit. For additional information, refer to the wiring diagrams. CLEAR the DTC. TEST the system for normal operation.

**No**

INSTALL a new throttle body.
REFER to: Throttle Body - Vehicles With: Supercharger, VIN Range: N52048->N99999 (303-04B Fuel Charging and Controls - V8 4.2L Petrol/V8 S/C 4.2L Petrol, Removal and Installation) /
Throttle Body - Vehicles Without: Supercharger, VIN Range: N52048->N99999 (303-04B Fuel Charging and Controls - V8 4.2L Petrol/V8 S/C 4.2L Petrol, Removal and Installation).
CLEAR the DTC. TEST the system for normal operation.

## PINPOINT TEST Z : SENSOR SUPPLY VOLTAGE MALFUNCTION, HIGH/LOW VOLTAGE

| TEST CONDITIONS | DETAILS/RESULTS/ACTIONS |
|---|---|

**Z1: CHECK THE SUPPLY VOLTAGE AT THE MANIFOLD ABSOLUTE PRESSURE (MAP) SENSOR**

1. Disconnect the MAP sensor electrical connector, (vehicles with supercharger) PI301 or (vehicles without supercharger) PI29.
2. Key on, engine off.
3. Measure the voltage between:

**Vehicles with supercharger**

GETtheMANUALS.org

| MAP sensor connector PI301, harness side | Battery |
|---|---|

| MAP sensor connector PI301, harness side | Battery |
|---|---|
| Pin 02 | Negative terminal |

**Vehicles without supercharger**

| MAP sensor connector PI29, harness side | Battery |
|---|---|
| Pin 02 | Negative terminal |

Is the voltage less than 5 volts?

**Yes**

REPAIR the circuit between the MAP sensor and the ECM. This circuit includes splice PIS84 on V8 vehicles with supercharger only. For additional information, refer to the wiring diagrams. CLEAR the DTC. TEST the system for normal operation.

**No**

GO to Z2.

**Z2: CHECK THE SUPPLY VOLTAGE AT THE FUEL RAIL PRESSURE (FRP) SENSOR**

1. Disconnect the FRP sensor electrical connector, PI28.
2. Measure the voltage between:

| FRP sensor connector PI28, harness side | Battery |
|---|---|
| Pin 01 | Negative terminal |

Is the voltage less than 5 volts?

**Yes**

REPAIR the circuit between the FRP sensor and battery. This circuit includes splice PIS84 on V8 vehicles with supercharger only. For additional information, refer to the wiring diagrams. CLEAR the DTC. TEST the system for normal operation.

**No**

CHECK for DTCs indicating a sensor fault. Refer to the DTC index.

## PINPOINT TEST AA : SENSOR GROUND CIRCUITS OPEN CIRCUIT

| TEST CONDITIONS | DETAILS/RESULTS/ACTIONS |
|---|---|

**AA1: CHECK THE SENSOR GROUND AT THE MANIFOLD ABSOLUTE PRESSURE (MAP) SENSOR**

1. Key off.
2. Disconnect the ECM electrical connector, PI300.
3. Disconnect the MAP sensor electrical connector, (vehicles with supercharger) PI301 or (vehicles without supercharger) PI29.
4. Measure the resistance between:

**Vehicles with supercharger**

| MAP sensor electrical connector PI301, harness side | ECM connector PI300, harness side |
|---|---|
| Pin 04 | Pin 12 |

**Vehicles without supercharger**

| MAP sensor electrical connector PI29, harness side | ECM connector PI300, harness side |
|---|---|
| Pin 04 | Pin 10 |

Is the resistance greater than 5 ohms?

**Yes**

REPAIR the high resistance circuit. For additional information, refer to the wiring diagrams. CLEAR the DTC. TEST the system for normal operation.

**No**

GO to AA2.

**AA2: CHECK THE SENSOR GROUND AT THE ENGINE COOLANT TEMPERATURE (ECT) SENSOR**

1. Disconnect the ECT sensor electrical connector, PI25.
2. Measure the resistance between:

| ECT sensor electrical connector PI25, harness side | ECM connector PI300, harness side |
|---|---|
| Pin 01 | Pin 12 |

Is the resistance greater than 5 ohms?

**Yes**

REPAIR the high resistance circuit. For additional information, refer to the wiring diagrams. CLEAR the DTC. TEST the system for normal operation.

**No**

GO to AA3.

**AA3: CHECK THE SENSOR GROUND AT THE MASS AIR FLOW (MAF) SENSOR**

1. Disconnect the MAF sensor electrical connector, PI14.
2. Measure the resistance between:

| MAF sensor electrical connector PI14, harness side | ECM connector PI300, harness side |
|---|---|
| Pin 02 | Pin 18 |

Is the resistance greater than 5 ohms?

**Yes**

REPAIR the high resistance circuit. For additional information, refer to the wiring diagrams. CLEAR the DTC. TEST the system for normal operation.

**No**

CHECK for DTCs indicating a sensor fault. Refer to the warranty policy and procedures manual if an ECM is suspect.

## PINPOINT TEST AB : STARTER RELAY SIGNAL

| TEST CONDITIONS | DETAILS/RESULTS/ACTIONS |
|---|---|

**AB1: CHECK THE STARTER RELAY TO ECM CIRCUIT FOR SHORT CIRCUIT TO GROUND**

1. Key off.
2. Remove the starter relay.
3. Measure the resistance between:

| Starter relay base | Battery |
|---|---|
| Pin 02 | Negative terminal |

Is the resistance less than 10,000 ohms?

**Yes**

REPAIR the short circuit. For additional information, refer to the wiring diagrams. CLEAR the DTC and test the system for normal operation.

GETtheMANUALS.org

**No**

GO to AB2.

**AB2: CHECK THE STARTER RELAY TO ECM CIRCUIT FOR SHORT CIRCUIT TO POWER**

1 Measure the resistance between:

| Starter relay base | Battery |
|---|---|
| Pin 02 | Positive terminal |

Is the resistance less than 10,000 ohms?

**Yes**

REPAIR the short circuit. For additional information, refer to the wiring diagrams. CLEAR the DTC and test the system for normal operation.

**No**

GO to AB3.

**AB3: CHECK THE STARTER RELAY TO ECM CIRCUIT FOR HIGH RESISTANCE**

1 Disconnect the ECM electrical connector, EC300.

2 Measure the resistance between:

| Starter relay base | ECM connector EC300, harness side |
|---|---|
| Pin 02 | Pin 51 |

Is the resistance greater than 5 ohms?

**Yes**

REPAIR the high resistance circuit. For additional information, refer to the wiring diagrams. CLEAR the DTC and test the system for normal operation.

**No**

INSTALL a new starter relay. Clear the DTC and test the system for normal operation. If the DTC resets, refer to the warranty policy and procedures manual if an ECM is suspect.

## PINPOINT TEST AC : RIGHT-HAND VARIABLE CAMSHAFT TIMING (VCT) OIL CONTROL SOLENOID MALFUNCTION, CIRCUIT MALFUNCTION

• NOTE: Check fuses, etc before beginning pinpoint tests, see visual inspection.

| TEST CONDITIONS | DETAILS/RESULTS/ACTIONS |
|---|---|

**AC1: CHECK ECM TO VCT SOLENOID CIRCUIT FOR HIGH RESISTANCE**

1 Key off.

2 Disconnect the VCT electrical connector, PI16.

3 Disconnect the ECM electrical connector, PI300.

4 Measure the resistance between:

| VCT connector PI16, harness side | ECM connector PI300, harness side |
|---|---|
| Pin 01 | Pin 86 |

Is the resistance greater than 5 ohms?

**Yes**

REPAIR the high resistance circuit. For additional information, refer to the wiring diagrams. CLEAR the DTC. TEST the system for normal operation.

**No**

GO to AC2.

**AC2: CHECK ECM TO VCT SOLENOID CIRCUIT FOR SHORT CIRCUIT TO POWER**

1 Key on, engine off.

2 Measure the voltage between:

| VCT connector PI16, harness side | Battery |
|---|---|
| Pin 01 | Negative terminal |

Is the voltage greater than 3 volts?

**Yes**

REPAIR the short circuit. For additional information, refer to the wiring diagrams. CLEAR the DTC. TEST the system for normal operation.

**No**

GO to AC3.

**AC3: CHECK ECM TO VCT SOLENOID CIRCUIT FOR SHORT CIRCUIT TO GROUND**

1 Key off.

2 Measure the resistance between:

| VCT connector PI16, harness side | Battery |
|---|---|
| Pin 01 | Negative terminal |

Is the resistance less than 10,000 ohms?

**Yes**

REPAIR the short circuit. For additional information, refer to the wiring diagrams. CLEAR the DTC. TEST the system for normal operation.

**No**

GO to AC4.

**AC4: CHECK VCT SOLENOID POWER**

1 Key on, engine off.

2 Measure the voltage between:

| VCT connector PI16, harness side | Battery |
|---|---|
| Pin 02 | Negative terminal |

Is the voltage less than 10 volts?

**Yes**

REPAIR the circuit between the VCT solenoid and battery. This circuit includes fuse 39 of the front power distribution box and the EMS control relay. For additional information, refer to the wiring diagrams. CLEAR the DTC. TEST the system for normal operation.

**No**

INSTALL a new VCT solenoid.

REFER to: Variable Camshaft Timing (VCT) Oil Control Solenoid (303-14B Electronic Engine Controls - V8 4.2L Petrol/V8 S/C 4.2L Petrol, Removal and Installation).

CLEAR the DTC. TEST the system for normal operation.

## PINPOINT TEST AD : LEFT-HAND VARIABLE CAMSHAFT TIMING (VCT) OIL CONTROL SOLENOID MALFUNCTION, CIRCUIT MALFUNCTION

| TEST CONDITIONS | DETAILS/RESULTS/ACTIONS |
|---|---|

GETtheMANUALS.org

**AD1: CHECK ECM TO VCT SOLENOID CIRCUIT FOR HIGH RESISTANCE**

1 Key off.

| | |
|---|---|
| 2 | Disconnect the VCT electrical connector, PI17. |
| 3 | Disconnect the ECM electrical connector, PI300. |
| 4 | Measure the resistance between: |

| VCT connector PI17, harness side | ECM connector PI300, harness side |
|---|---|
| Pin 01 | Pin 87 |

Is the resistance greater than 5 ohms?

**Yes**

REPAIR the high resistance circuit. For additional information, refer to the wiring diagrams. CLEAR the DTC. TEST the system for normal operation.

**No**

GO to AD2.

**AD2: CHECK ECM TO VCT SOLENOID CIRCUIT FOR SHORT CIRCUIT TO POWER**

| | |
|---|---|
| 1 | Key on, engine off. |
| 2 | Measure the voltage between: |

| VCT connector PI17, harness side | Battery |
|---|---|
| Pin 01 | Negative terminal |

Is the voltage greater than 3 volts?

**Yes**

REPAIR the short circuit. For additional information, refer to the wiring diagrams. CLEAR the DTC. TEST the system for normal operation.

**No**

GO to AD3.

**AD3: CHECK ECM TO VCT SOLENOID CIRCUIT FOR SHORT CIRCUIT TO GROUND**

| | |
|---|---|
| 1 | Key on, engine off. |
| 2 | Measure the resistance between: |

| VCT connector PI17, harness side | Battery |
|---|---|
| Pin 01 | Negative terminal |

Is the resistance less than 10,000 ohms?

**Yes**

REPAIR the short circuit. For additional information, refer to the wiring diagrams. CLEAR the DTC. TEST the system for normal operation.

**No**

GO to AD4.

**AD4: CHECK VCT SOLENOID POWER**

| | |
|---|---|
| 1 | Key on, engine off. |
| 2 | Measure the voltage between: |

| VCT connector PI17, harness side | Battery |
|---|---|
| Pin 02 | Negative terminal |

Is the voltage less than 10 volts?

**Yes**

REPAIR the circuit between the VCT solenoid and battery. This circuit includes fuse 39 of the front power distribution box and the EMS control relay. For additional information, refer to the wiring diagrams. CLEAR the DTC. TEST the system for normal operation.

**No**

INSTALL a new VCT solenoid.
REFER to: Variable Camshaft Timing (VCT) Oil Control Solenoid (303-14B Electronic Engine Controls - V8 4.2L Petrol/V8 S/C 4.2L Petrol, Removal and Installation).
CLEAR the DTC. TEST the system for normal operation.

## PINPOINT TEST AE : EMS CONTROL RELAY MALFUNCTION

| TEST CONDITIONS | DETAILS/RESULTS/ACTIONS |
|---|---|

**AE1: CHECK THE EMS RELAY PERMANENT SUPPLY**

| | |
|---|---|
| 1 | Key off. |
| 2 | Remove the EMS relay. |
| 3 | Measure the voltage between: |

| Relay base | Battery |
|---|---|
| Pin 01 | Negative terminal |
| Pin 03 | |

Are both voltages greater than 10 volts?

**Yes**

GO to AE2.

**No**

REPAIR the circuit between the relay base and battery. For additional information, refer to the wiring diagrams. CLEAR the DTC. TEST the system for normal operation.

**AE2: CHECK THE ECM TO EMS RELAY CONTROL CIRCUIT FOR HIGH RESISTANCE**

| | |
|---|---|
| 1 | Disconnect the ECM electrical connector, FH300. |
| 2 | Measure the resistance between: |

| Relay base | ECM connector FH300, harness side |
|---|---|
| Pin 02 | Pin 16 |

Is the resistance greater than 5 ohms?

**Yes**

REPAIR the high resistance circuit. For additional information, refer to the wiring diagrams. CLEAR the DTC. TEST the system for normal operation.

**No**

GO to AE3.

**AE3: CHECK THE EMS RELAY TO ECM SUPPLY CIRCUIT FOR HIGH RESISTANCE**

| | |
|---|---|
| 1 | Measure the resistance between: |

| Relay base | ECM connector FH300, harness side |
|---|---|
| Pin 05 | Pin 04 |
| | Pin 06 |

Is either resistance greater than 5 ohms?

**Yes**

REPAIR the high resistance circuit. These circuits include fuses 18 and 39 of the front power distribution box. For additional information, refer to the wiring diagrams. CLEAR the DTC. TEST the system for normal operation.

GETtheMANUALS.org

| | |
|---|---|
| | **No**<br>INSTALL a new EMS relay. CLEAR the DTC. TEST the system for normal operation. |

## PINPOINT TEST AF : MANIFOLD ABSOLUTE PRESSURE (MAP) SENSOR SENSING CIRCUIT MALFUNCTION, HIGH/LOW VOLTAGE

• NOTE: For sensor ground tests, GO to Pinpoint Test AA.

| TEST CONDITIONS | DETAILS/RESULTS/ACTIONS |
|---|---|
| **AF1: CHECK THE MAP SENSOR SENSING CIRCUIT FOR HIGH RESISTANCE** | |
| | 1 Key off. |
| | 2 Disconnect the MAP sensor electrical connector, (vehicles with supercharger) PI301 or (vehicles without supercharger) PI29. |
| | 3 Disconnect the ECM electrical connector, PI300. |
| | 4 Measure the resistance between: |

**Vehicles with supercharger**

| MAP sensor electrical connector PI301, harness side | ECM connector PI300, harness side |
|---|---|
| Pin 01 | Pin 38 |

**Vehicles without supercharger**

| MAP sensor electrical connector PI29, harness side | ECM connector PI300, harness side |
|---|---|
| Pin 01 | Pin 69 |

| | |
|---|---|
| | Is the resistance greater than 5 ohms?<br>**Yes**<br>REPAIR the high resistance circuit. For additional information, refer to the wiring diagrams. CLEAR the DTC. TEST the system for normal operation.<br>**No**<br>GO to AF2. |
| **AF2: CHECK THE MAP SENSOR SENSING CIRCUIT FOR SHORT CIRCUIT TO POWER** | |
| | 1 Key on, engine off. |
| | 2 Measure the voltage between: |

**Vehicles with supercharger**

| MAP sensor electrical connector PI301, harness side | Battery |
|---|---|
| Pin 01 | Negative terminal |

**Vehicles without supercharger**

| MAP sensor electrical connector PI29, harness side | Battery |
|---|---|
| Pin 01 | Negative terminal |

| | |
|---|---|
| | Is the voltage greater than 3 volts?<br>**Yes**<br>REPAIR the short circuit. For additional information, refer to the wiring diagrams. CLEAR the DTC. TEST the system for normal operation.<br>**No**<br>GO to AF3. |
| **AF3: CHECK THE MAP SENSOR SENSING CIRCUIT FOR SHORT CIRCUIT TO GROUND** | |
| | 1 Measure the resistance between: |

**Vehicles with supercharger**

| MAP sensor electrical connector PI301, harness side | Battery |
|---|---|
| Pin 01 | Negative terminal |

**Vehicles without supercharger**

| MAP sensor electrical connector PI29, harness side | Battery |
|---|---|
| Pin 01 | Negative terminal |

| | |
|---|---|
| | Is the resistance less than 10,000 ohms?<br>**Yes**<br>REPAIR the short circuit. For additional information, refer to the wiring diagrams. CLEAR the DTC. TEST the system for normal operation.<br>**No**<br>INSTALL a new MAP sensor.<br>REFER to: Manifold Absolute Pressure (MAP) Sensor (303-14B Electronic Engine Controls - V8 4.2L Petrol/V8 S/C 4.2L Petrol, Removal and Installation).<br>CLEAR the DTC. TEST the system for normal operation. If the DTC is repeated, refer to the warranty policy and procedures manual if an ECM is suspect. |

## PINPOINT TEST AG : ENGINE FUEL TEMPERATURE (EFT) SENSOR RANGE/PERFORMANCE, LOW/HIGH VOLTAGE

| TEST CONDITIONS | DETAILS/RESULTS/ACTIONS |
|---|---|
| **AG1: CHECK THE EFT SENSOR SENSING CIRCUIT FOR HIGH RESISTANCE** | |
| | 1 Key off. |
| | 2 Disconnect the EFT sensor electrical connector, PI27. |
| | 3 Disconnect the ECM electrical connector, PI300. |
| | 4 Measure the resistance between: |

| EFT sensor connector PI27, harness side | ECM connector PI300, harness side |
|---|---|
| Pin 02 | Pin 46 |

| | |
|---|---|
| | Is the resistance greater than 5 ohms?<br>**Yes**<br>REPAIR the high resistance circuit. For additional information, refer to the wiring diagrams. CLEAR the DTC. TEST the system for normal operation.<br>**No**<br>GO to AG2. |
| **AG2: CHECK THE EFT SENSOR SENSING CIRCUIT FOR SHORT CIRCUIT TO POWER** | |
| | 1 Key on, engine off. |
| | 2 Measure the voltage between: |

| EFT sensor connector PI27, harness side | Battery |
|---|---|
| Pin 02 | Negative terminal |

GETtheMANUALS.org

| | |
|---|---|
| | Is the voltage greater than 3 volts?<br>**Yes**<br>REPAIR the short circuit. For additional information, refer to the wiring diagrams. CLEAR the DTC. TEST the system for normal operation.<br>**No**<br>GO to AG3. |

**AG3: CHECK THE EFT SENSOR SENSING CIRCUIT FOR SHORT CIRCUIT TO GROUND**

1 Measure the resistance between:

| EFT sensor connector PI27, harness side | Battery |
|---|---|
| Pin 02 | Negative terminal |

| | |
|---|---|
| | Is the resistance less than 10,000 ohms?<br>**Yes**<br>REPAIR the short circuit. For additional information, refer to the wiring diagrams. CLEAR the DTC. TEST the system for normal operation.<br>**No**<br>INSTALL a new EFT sensor.<br>REFER to: Fuel Temperature Sensor (303-14B Electronic Engine Controls - V8 4.2L Petrol/V8 S/C 4.2L Petrol, Removal and Installation).<br>CLEAR the DTC. TEST the system for normal operation. |

## PINPOINT TEST AH : AIR CONDITIONING (A/C) PRESSURE SENSOR CIRCUIT LOW/HIGH VOLTAGE

| TEST CONDITIONS | DETAILS/RESULTS/ACTIONS |
|---|---|

**AH1: CHECK THE A/C PRESSURE SENSOR SENSING CIRCUIT FOR HIGH RESISTANCE**

1 Key off.

2 Disconnect the A/C pressure sensor electrical connector, FH110.

3 Disconnect the ECM electrical connector, FH300.

4 Measure the resistance between:

| A/C pressure sensor connector FH110, harness side | ECM connector FH300, harness side |
|---|---|
| Pin 03 | Pin 12 |

| | |
|---|---|
| | Is the resistance greater than 5 ohms?<br>**Yes**<br>REPAIR the high resistance circuit. For additional information, refer to the wiring diagrams. CLEAR the DTC. TEST the system for normal operation.<br>**No**<br>GO to AH2. |

**AH2: CHECK THE A/C PRESSURE SENSOR SENSING CIRCUIT FOR SHORT CIRCUIT TO POWER**

1 Key on, engine off.

2 Measure the voltage between:

| A/C pressure sensor connector FH110, harness side | Battery |
|---|---|
| Pin 03 | Negative terminal |

| | |
|---|---|
| | Is the voltage greater than 3 volts?<br>**Yes**<br>REPAIR the short circuit. For additional information, refer to the wiring diagrams. CLEAR the DTC. TEST the system for normal operation.<br>**No**<br>GO to AH3. |

**AH3: CHECK THE A/C PRESSURE SENSOR SENSING CIRCUIT FOR SHORT CIRCUIT TO GROUND**

1 Measure the resistance between:

| A/C pressure sensor connector FH110, harness side | Battery |
|---|---|
| Pin 03 | Negative terminal |

| | |
|---|---|
| | Is the resistance less than 10,000 ohms?<br>**Yes**<br>REPAIR the short circuit. For additional information, refer to the wiring diagrams. CLEAR the DTC. TEST the system for normal operation.<br>**No**<br>INSTALL a new A/C pressure sensor.<br>REFER to: Pressure Cutoff Switch - V8 4.2L Petrol/V8 S/C 4.2L Petrol/2.5L NA V6 - AJV6/3.0L NA V6 - AJ27 (412-03 Air Conditioning, Removal and Installation). |

## PINPOINT TEST AI : MANIFOLD ABSOLUTE PRESSURE SENSOR/TEMPERATURE (MAPT) SENSOR, INTAKE AIR TEMPERATURE (IAT2) SENSING CIRCUIT

| TEST CONDITIONS | DETAILS/RESULTS/ACTIONS |
|---|---|

**AI1: CHECK THE MAPT SENSOR IAT2 SENSING CIRCUIT FOR HIGH RESISTANCE**

1 key off.

2 Disconnect the MAPT sensor electrical connector, PI29.

3 Disconnect the ECM electrical connector, PI300.

4 Measure the resistance between:

| MAPT sensor connector PI29, harness side | ECM connector PI300, harness side |
|---|---|
| Pin 03 | Pin 39 |

| | |
|---|---|
| | Is the resistance greater than 5 ohms?<br>**Yes**<br>REPAIR the high resistance circuit. For additional information, refer to the wiring diagrams. CLEAR the DTC. TEST the system for normal operation.<br>**No**<br>GO to AI2. |

**AI2: CHECK THE MAPT SENSOR IAT2 SENSING CIRCUIT FOR SHORT CIRCUIT TO POWER**

1 Key on, engine off.

2 Measure the voltage between:

| MAPT sensor connector PI29, harness side | Battery |
|---|---|
| Pin 03 | Negative terminal |

GETtheMANUALS.org

| | |
|---|---|
| | Is the voltage greater than 3 volts?<br>**Yes**<br>REPAIR the short circuit. For additional information, refer to the wiring diagrams. CLEAR the DTC. TEST the system for normal operation.<br>**No**<br>GO to AI3. |

**AI3: CHECK THE MAPT SENSOR IAT2 SENSING CIRCUIT FOR SHORT CIRCUIT TO GROUND**

1 Measure the resistance between:

| MAPT sensor connector PI29, harness side | Battery |
|---|---|
| Pin 03 | Negative terminal |

Is the resistance less than 10,000 ohms?

**Yes**

REPAIR the short circuit. For additional information, refer to the wiring diagrams. CLEAR the DTC. TEST the system for normal operation.

**No**

INSTALL a new MAPT sensor. CLEAR the DTC. TEST the system for normal operation.

## PINPOINT TEST AJ : AIR CLEANER SOLENOID VALVE DRIVE CIRCUIT MALFUNCTION

| TEST CONDITIONS | DETAILS/RESULTS/ACTIONS |
|---|---|

**AJ1: CHECK THE POWER SUPPLY TO THE AIR CLEANER SOLENOID VALVE**

1 Key off.

2 Disconnect the air cleaner solenoid valve electrical connector, FH10.

3 Key on, engine off.

4 Make sure the EMS relay is engergized.

5 Measure the voltage between:

| Air cleaner solenoid valve connector FH10, harness side | Battery |
|---|---|
| Pin 01 | Negative terminal |

Is the voltage greater than 10 volts?

**Yes**

GO to AJ2.

**No**

REPAIR the circuit between the air cleaner solenoid valve and battery. This circuit includes splice FHS04, FHS60, fuse 37 of the front power distribution box and the EMS relay. For additional information, refer to the wiring diagrams. CLEAR the DTC. TEST the system for normal operation.

**AJ2: CHECK THE AIR CLEANER SOLENOID VALVE TO ECM CIRCUIT FOR HIGH RESISTANCE**

1 Key off.

2 Disconnect the ECM electrical connector, PI300.

3 Measure the resistance between:

| Air cleaner solenoid valve connector FH10, harness side | ECM connector PI300, harness side |
|---|---|
| Pin 02 | Pin 49 |

Is the resistance greater than 5 ohms?

**Yes**

REPAIR the high resistance circuit. For additional information, refer to the wiring diagrams. CLEAR the DTC. TEST the system for normal operation.

**No**

GO to AJ3.

**AJ3: CHECK THE AIR CLEANER SOLENOID VALVE TO ECM CIRCUIT FOR SHORT CIRCUIT TO POWER**

1 Key on, engine off.

2 Measure the voltage between:

| Air cleaner solenoid valve connector FH10, harness side | Battery |
|---|---|
| Pin 02 | Negative terminal |

Is the voltage greater than 3 volts?

**Yes**

REPAIR the short circuit. For additional information, refer to the wiring diagrams. CLEAR the DTC. TEST the system for normal operation.

**No**

GO to AJ4.

**AJ4: CHECK THE AIR CLEANER SOLENOID VALVE TO ECM CIRCUIT FOR SHORT CIRCUIT TO GROUND**

1 Measure the resistance between:

| Air cleaner solenoid valve connector FH10, harness side | Battery |
|---|---|
| Pin 02 | Negative terminal |

Is the resistance less than 10,000 ohms?

**Yes**

REPAIR the short circuit. For additional information, refer to the wiring diagrams. CLEAR the DTC. TEST the system for normal operation.

**No**

INSTALL a new air cleaner solenoid valve. CLEAR the DTC. TEST the system for normal operation.

## PINPOINT TEST AK : CHECK THE AUXILIARY COOLANT PUMP FUNCTION

| TEST CONDITIONS | DETAILS/RESULTS/ACTIONS |
|---|---|

**AK1: CHECK THE POWER SUPPLY TO THE AUXILIARY COOLANT PUMP**

1 Key off.

2 Disconnect the auxiliary coolant pump electrical connector, CP02.

3 Key on, engine off.

4 Make sure the EMS relay is engergized.

5 Make sure the auxiliary coolant pump relay is engaged.

6 Measure the voltage between:

| Auxiliary coolant pump connector CP02, harness side | Battery |
|---|---|
| Pin 02 | Negative terminal |

GETtheMANUALS.org

Is the voltage less than 10 volts?

**Yes**

REPAIR the circuit between the auxiliary coolant pump and battery. This circuit includes fuse 36 of the front power distribution box, the auxiliary coolant pump relay and the EMS relay. For additional information, refer to the wiring diagrams. CLEAR the DTC. TEST the system for normal operation.

**No**

GO to AK2.

**AK2: CHECK THE AUXILIARY COOLANT PUMP GROUND**

1 Measure the resistance between:

| Auxiliary coolant pump connector CP02, harness side | Battery |
|---|---|
| Pin 01 | Negative terminal |

Is the resistance greater than 5 ohms?

**Yes**

REPAIR the high resistance circuit. For additional information, refer to the wiring diagrams. TEST the system for normal operation.

**No**

INSTALL a new auxiliary coolant pump.
REFER to: Water Pump (303-03B Supercharger Cooling, Removal and Installation).
CLEAR the DTC. TEST the system for normal operation.

## PINPOINT TEST AL : FUEL RAIL PRESSURE (FRP) SENSOR CIRCUIT

| TEST CONDITIONS | DETAILS/RESULTS/ACTIONS |
|---|---|

**AL1: CHECK THE FRP SENSOR SUPPLY CIRCUIT VOLTAGE**

1 Key off.

2 Disconnect the FRP sensor electrical connector, PI28.

3 Key on, engine off.

4 Measure the voltage between:

| FRP sensor connector PI28, harness side | Battery |
|---|---|
| Pin 01 | Negative terminal |

Is the voltage less than 4 volts?

**Yes**

REPAIR the 5 volt supply circuit between the FRP sensor and the ECM. For additional information, refer to the wiring diagrams. CLEAR the DTC and test the system for normal operation.

**No**

GO to AL2.

**AL2: CHECK THE FRP SENSOR SIGNAL CIRCUIT FOR SHORT CIRCUIT TO GROUND**

1 Key off.

2 Measure the resistance between:

| FRP sensor connector PI28, harness side | Battery |
|---|---|
| Pin 03 | Negative terminal |

Is the resistance less than 10,000 ohms?

**Yes**

REPAIR the short circuit. For additional information, refer to the wiring diagrams. CLEAR the DTC and test the system for normal operation.

**No**

GO to AL3.

**AL3: CHECK THE FRP SENSOR SIGNAL CIRCUIT FOR SHORT CIRCUIT TO POWER**

1 Measure the resistance between:

| FRP sensor connector PI28, harness side | Battery |
|---|---|
| Pin 03 | Positive terminal |

Is the resistance less than 10,000 ohms?

**Yes**

REPAIR the short circuit. For additional information, refer to the wiring diagrams. CLEAR the DTC and test the system for normal operation.

**No**

GO to AL4.

**AL4: CHECK THE FRP SENSOR SIGNAL CIRCUIT FOR HIGH RESISTANCE**

1 Disconnect the ECM sensor electrical connector, PI300.

2 Measure the resistance between:

| FRP sensor connector PI28, harness side | ECM connector PI300, harness side |
|---|---|
| Pin 03 | Pin 71 |

Is the resistance greater than 5 ohms?

**Yes**

REPAIR the high resistance circuit. For additional information, refer to the wiring diagrams. CLEAR the DTC and test the system for normal operation.

**No**

GO to AL5.

**AL5: CHECK THE FRP SENSOR GROUND CIRCUIT FOR HIGH RESISTANCE**

1 Measure the resistance between:

| FRP sensor connector PI28, harness side | ECM connector PI300, harness side |
|---|---|
| Pin 02 | Pin 10 |

Is the resistance greater than 5 ohms?

**Yes**

REPAIR the high resistance circuit. This circuit includes splice PIS49. For additional information, refer to the wiring diagrams. CLEAR the DTC and test the system for normal operation.

**No**

INSTALL a new FRP sensor. CLEAR the DTC and test the system for normal operation.

## PINPOINT TEST AM : MANIFOLD ABSOLUTE PRESSURE/TEMPERATURE (MAPT) SENSOR PRESSURE SENSING CIRCUIT

| TEST CONDITIONS | DETAILS/RESULTS/ACTIONS |
|---|---|

**AM1: CHECK THE POWER SUPPLY TO THE MAPT SENSOR**

GETtheMANUALS.org

1 Key off.

| | |
|---|---|
| | 2 Disconnect the MAPT connector, PI29. |
| | 3 Key on, engine off. |
| | 4 Measure the voltage between: |

| MAPT sensor connnector PI29, harness side | Battery |
|---|---|
| Pin 02 | Negative terminal |

| | |
|---|---|
| | Is the voltage greater than 4 volts?<br>**Yes**<br>GO to AM2.<br>**No**<br>CHECK the circuit between the MAPT sensor and the ECM. Refer to the warranty policy and procedures manual if an ECM is suspect. |

**AM2: CHECK THE GROUND TO THE MAPT SENSOR**

| | |
|---|---|
| | 1 Measure the resistance between: |

| MAPT sensor connnector PI29, harness side | Battery |
|---|---|
| Pin 04 | Negative terminal |

| | |
|---|---|
| | Is the resistance greater than 5 ohms?<br>**Yes**<br>REPAIR the high resistance circuit. This circuit includes splice PIS49 and the ECM. For additional information, refer to the wiring diagrams. CLEAR the DTC. TEST the system for normal operation. Refer to the warranty policy and procedures manual if an ECM is suspect.<br>**No**<br>GO to AM3. |

**AM3: CHECK THE MAPT PRESSURE SENSING CIRCUIT FOR SHORT CIRCUIT TO GROUND**

| | |
|---|---|
| | 1 Disconnect the ECM connector, PI29. |
| | 2 Measure the resistance between: |

| MAPT sensor connnector PI29, harness side | Battery |
|---|---|
| Pin 01 | Negative terminal |

| | |
|---|---|
| | Is the resistance less than 10,000 ohms?<br>**Yes**<br>REPAIR the short circuit. For additional information, refer to the wiring diagrams. CLEAR the DTC. TEST the system for normal operation.<br>**No**<br>GO to AM4. |

**AM4: CHECK THE MAPT PRESSURE SENSING CIRCUIT FOR SHORT CIRCUIT TO POWER**

| | |
|---|---|
| | 1 Measure the resistance between: |

| MAPT sensor connnector PI29, harness side | Battery |
|---|---|
| Pin 01 | Positive terminal |

| | |
|---|---|
| | Is the resistance less than 10,000 ohms?<br>**Yes**<br>REPAIR the short circuit. For additional information, refer to the wiring diagrams. CLEAR the DTC. TEST the system for normal operation.<br>**No**<br>GO to AM5. |

**AM5: CHECK THE MAPT PRESSURE SENSING CIRCUIT FOR HIGH RESISTANCE**

| | |
|---|---|
| | 1 Measure the resistance between: |

| MAPT sensor connnector PI29, harness side | ECM connector PI300, harness side |
|---|---|
| Pin 01 | Pin 69 |

| | |
|---|---|
| | Is the resistance greater than 5 ohms?<br>**Yes**<br>REPAIR the high resistance circuit. For additional information, refer to the wiring diagrams. CLEAR the DTC. TEST the system for normal operation. Refer to the warranty policy and procedures manual if an ECM is suspect.<br>**No**<br>INSTALL a new MAPT sensor. CLEAR the DTC. TEST the system for normal operation. |

## PINPOINT TEST AN : BRAKE SWITCH

| TEST CONDITIONS | DETAILS/RESULTS/ACTIONS |
|---|---|

**AN1: CHECK THE OPERATION OF THE BRAKE SWITCH (PEDAL RELEASED)**

| | |
|---|---|
| | 1 Key off. |
| | 2 Disconnect the brake switch electrical connector, CA37. |
| | 3 Make sure the brake pedal is not pressed. |
| | 4 Measure the resistance between: |

| Brake switch connector CA37, component side | Brake switch connector CA37, component side |
|---|---|
| Pin 01 | Pin 02 |

| | |
|---|---|
| | Is the resistance greater than 10 ohms?<br>**Yes**<br>GO to AN2.<br>**No**<br>INSTALL a new brake switch. CLEAR the DTC, test the system for normal operation. |

**AN2: CHECK THE OPERATION OF THE BRAKE SWITCH (PEDAL PRESSED)**

| | |
|---|---|
| | 1 Press the brake pedal. |
| | 2 Measure the resistance between: |

| Brake switch connector CA37, component side | Brake switch connector CA37, component side |
|---|---|
| Pin 01 | Pin 02 |

| | |
|---|---|
| | Is the resistance greater than 10 ohms?<br>**Yes**<br>INSTALL a new brake switch. CLEAR the DTC, test the system for normal operation.<br>**No**<br>GO to AN3. |

**AN3: CHECK THE POWER SUPPLY TO THE BRAKE PEDAL SWITCH**

| | |
|---|---|
| | 1 Key on, engine off. |
| | 2 Measure the voltage between: |

| Brake switch connector CA37, harness side | Battery |
|---|---|
| Pin 01 | Negative terminal |

GETthemANUALS.org

Is the voltage less than 10 volts?

**Yes**

REPAIR the circuit between the brake switch and battery. This circuit includes fuse 35 of the primary junction box. For additional information, refer to the wiring diagrams. CLEAR the DTC, test the system for normal operation.

**No**

GO to AN4.

**AN4: CHECK THE BRAKE SWITCH SIGNAL CIRCUIT FOR SHORT CIRCUIT TO GROUND**

1. Key off.
2. Measure the resistance between:

| Brake switch connector CA37, harness side | Battery |
|---|---|
| Pin 02 | Negative terminal |

Is the resistance less than 10,000 ohms?

**Yes**

REPAIR the short circuit. For additional information, refer to the wiring diagrams. CLEAR the DTC, test the system for normal operation.

**No**

GO to AN5.

**AN5: CHECK THE BRAKE SWITCH SIGNAL CIRCUIT FOR SHORT CIRCUIT TO POWER**

1. Measure the resistance between:

| Brake switch connector CA37, harness side | Battery |
|---|---|
| Pin 02 | Positive terminal |

Is the resistance less than 10,000 ohms?

**Yes**

REPAIR the short circuit. For additional information, refer to the wiring diagrams. CLEAR the DTC, test the system for normal operation.

**No**

GO to AN6.

**AN6: CHECK THE BRAKE SWITCH SIGNAL CIRCUIT FOR HIGH RESISTANCE**

1. Disconnect the ECM electrical connector, FH300.
2. Measure the resistance between:

| Brake switch connector CA37, harness side | ECM connector FH300, harness side |
|---|---|
| Pin 02 | Pin 41 |

Is the resistance greater than 5 ohms?

**Yes**

REPAIR the high resistance circuit. For additional information, refer to the wiring diagrams. CLEAR the DTC. TEST the system for normal operation.

**No**

REFER to the warranty policy and procedures manual if an ECM is suspect.

## PINPOINT TEST AO : AIR CONDITIONING (A/C) COMPRESSOR CLUTCH CONTROL CIRCUIT

| TEST CONDITIONS | DETAILS/RESULTS/ACTIONS |
|---|---|

**AO1: CHECK THE A/C CLUTCH RELAY CONTROL CIRCUIT FOR HIGH RESISTANCE**

1. Remove the A/C clutch relay.
2. Disconnect the ECM electrical connector, FH300.
3. Measure the resistance between:

| A/C clutch relay base | ECM connector FH300, harness side |
|---|---|
| Pin 02 | Pin 53 |

Is the resistance greater than 5 ohms?

**Yes**

REPAIR the high resistance circuit. For additional information, refer to the wiring diagrams. CLEAR the DTC. TEST the system for normal operation.

**No**

GO to AO2.

**AO2: CHECK THE A/C CLUTCH RELAY CONTROL CIRCUIT FOR SHORT CIRCUIT TO GROUND**

1. Key on, engine off.
2. Measure the resistance between:

| A/C clutch relay base | Battery |
|---|---|
| Pin 02 | Negative terminal |

Is the resistance less than 10,000 ohms?

**Yes**

REPAIR the short circuit. For additional information, refer to the wiring diagrams. CLEAR the DTC. TEST the system for normal operation.

**No**

GO to AO3.

**AO3: CHECK THE A/C CLUTCH RELAY CONTROL CIRCUIT FOR SHORT CIRCUIT TO POWER**

1. Measure the resistance between:

| A/C clutch relay base | Battery |
|---|---|
| Pin 02 | Positive terminal |

Is the resistance less than 10,000 ohms?

**Yes**

REPAIR the short circuit. For additional information, refer to the wiring diagrams. CLEAR the DTC. TEST the system for normal operation.

**No**

INSTALL a new A/C clutch relay. CLEAR the DTC. TEST the system for normal operation. If the DTC is reset, refer to the warranty policy and procedures manual if an ECM is suspect.

GETtheMANUALS.org

# Electronic Engine Controls - V8 4.2L Petrol/V8 S/C 4.2L Petrol - Powertrain Control Module (PCM) Long Drive Cycle Self-Test

General Procedures

WARNING: Where possible, all road tests should be on well surfaced and dry roads. Always comply with speed limits and local traffic regulations.

• NOTE: This procedure is an overcheck only. If fault codes are found, interrogation of the relevant system must be carried out and claimed against.

• NOTE: The vehicle must exceed 50mph (80 km/h) during the road test.

**1.** Connect the diagnostic equipment to the vehicle.

**2.** Follow on screen prompts and check for engine management fault codes.

**3.** Clear the fault codes following the on screen procedure.

**4.** Disconnect the diagnostic equipment from the vehicle.

**5.** NOTE: Make sure cruise control is not engaged.

Make sure the engine temperature is above 60 ºC (140 ºF).

Carry out a road test and perform the following operations.

1. Accelerate to 55 mph (88 km/h) in 5th gear and cruise for 2 minutes with the engine speed at or above 1800rpm.
2. Lift off the throttle and allow the vehicle to decelerate until the engine speed is less than 1000 rpm.
3. Stop the vehicle.
4. Release brake, allow the vehicle to move with no throttle for 1 minute.
5. Road test is now complete.

**6.** Connect the diagnostic equipment to the vehicle.

**7.** NOTE: If fault codes are found, interrogation of the relevant system must be carried out and claimed against.

Follow on screen prompts and check for engine management fault codes.

**8.** Disconnect the diagnostic equipment from the vehicle.

GETtheMANUALS.org

# Electronic Engine Controls - V8 4.2L Petrol/V8 S/C 4.2L Petrol - Powertrain Control Module (PCM) Short Drive Cycle Self-Test

General Procedures

• NOTE: This procedure is an overcheck only. If fault codes are found, interrogation of the relevant system must be carried out and claimed against.

1. Connect the diagnostic equipment to the vehicle.
2. Follow on screen prompts and check for engine management fault codes.
3. Clear the fault codes following the on screen procedure.
4. Start the engine.
   - Allow the engine to idle for 30 seconds.
   - Raise the engine speed to 1500 rpm and hold for 3 minutes until a temperature of 70ºC (158 ºF) is achieved.
   - Allow the engine to idle for 30 seconds.
   - Switch off the engine.
5. NOTE: If fault codes are found, interrogation of the relevant system must be carried out and claimed against.

   Follow on screen prompts and check for engine management fault codes.
6. Disconnect the diagnostic equipment from the vehicle.

GETtheMANUALS.org

# Electronic Engine Controls - V8 4.2L Petrol/V8 S/C 4.2L Petrol - Brake Pedal Position (BPP) Switch

Removal and Installation

## Removal

1. Switch the ignition on.
2. Position the front seat fully rearwards.
3. Switch the ignition off.
4. Remove the driver's side footwell trim panel.
   - Release the 3 clips.

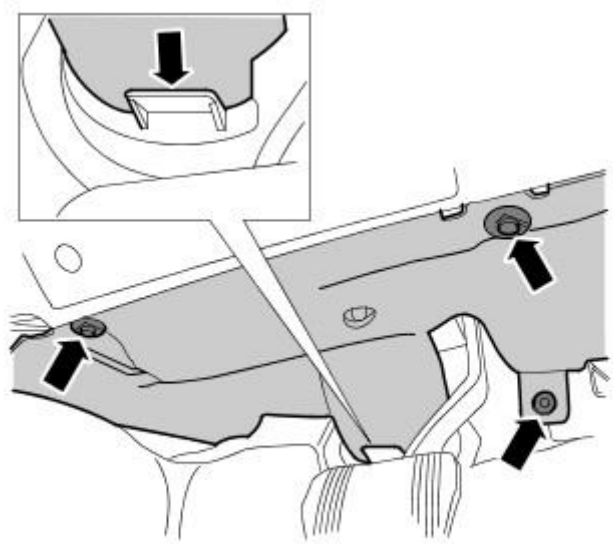

E102662

5. Release the brake pedal position (BPP) switch.
   - Rotate the BPP switch 45 degrees counter-clockwise.

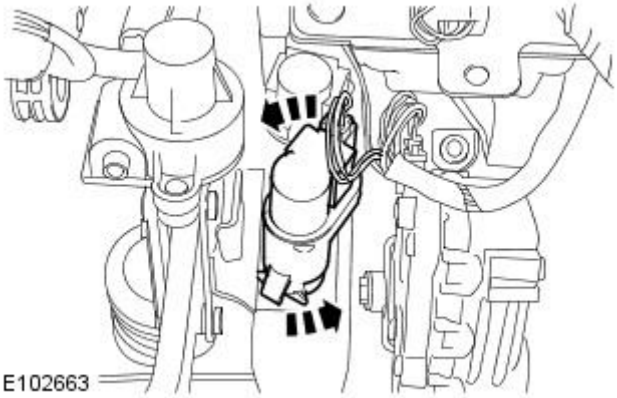

E102663

6. Remove the BPP switch.
   - Disconnect the electrical connector.

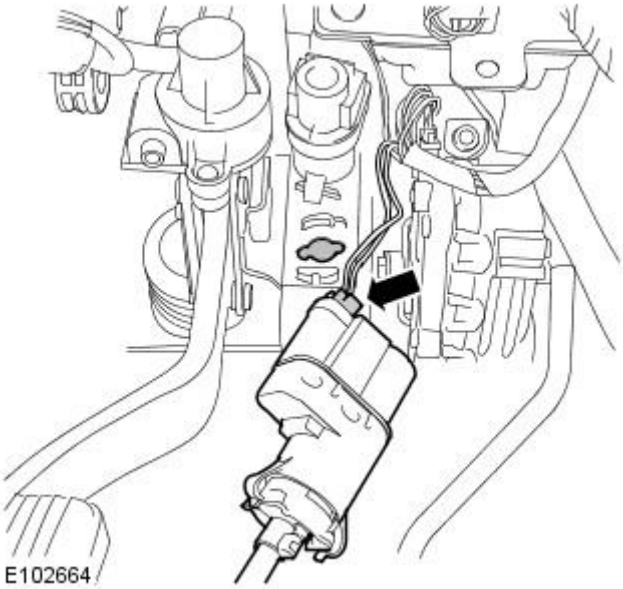

E102664

## Installation

GETtheMANUALS.org

1. CAUTIONS:

Make sure that the brake pedal remains in the rest position during this procedure.

The bracket is keyed to avoid incorrect orientation. Failure to correctly align the switch may result in damage to the vehicle.

Make sure that the pedal box, booster-to-brake pedal assembly and switch bracket are all installed correctly before installing the switch.

Install the BPP switch.

- Locate the BPP switch in the bracket.
- Rotate the BPP switch 45 degrees clockwise.

**2.** Connect the electrical connector.

**3.** Install the driver's side footwell trim panel.

- Align the trim panel with the guide.
- Install the 3 clips.

GETtheMANUALS.org

# Electronic Engine Controls - V8 4.2L Petrol/V8 S/C 4.2L Petrol - Camshaft Position (CMP) Sensor LH

Removal and Installation

## Removal

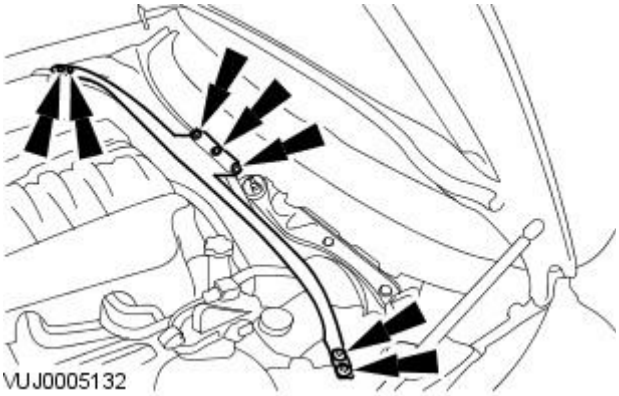


1. Remove the cowl vent screen.
   For additional information, refer to Section 501-02 Front End Body Panels.
2. Remove the engine compartment support.

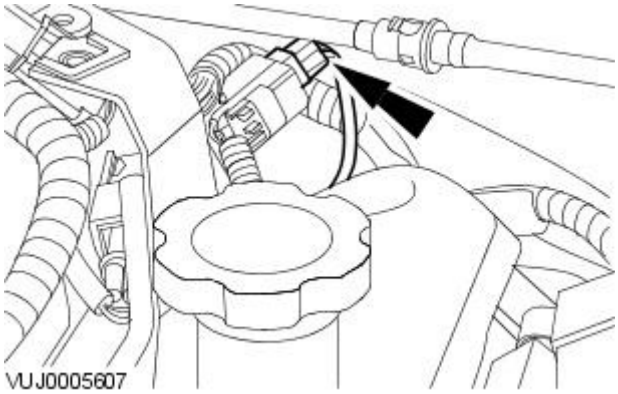


3. Disconnect the camshaft position sensor (CMP) electrical connector.

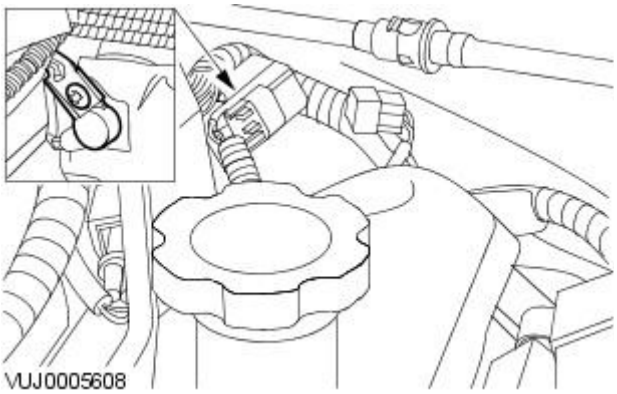


4. Remove the CMP sensor.
   - Remove and discard the CMP sensor O-ring seal.

## Installation

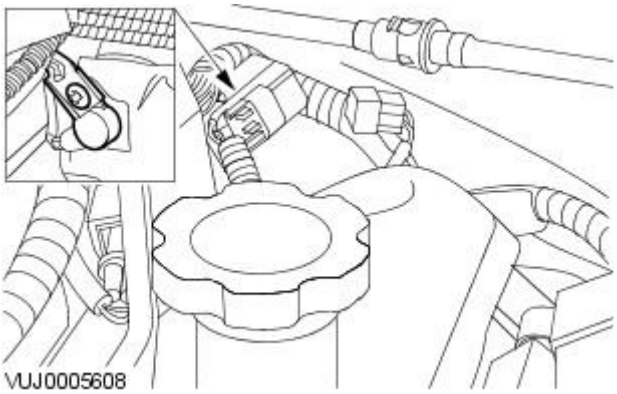


1. To install, reverse removal procedure.
   - Install a new CMP O-ring seal.
   - Tighten to 7 Nm.

GETtheMANUALS.org

# Electronic Engine Controls - V8 4.2L Petrol/V8 S/C 4.2L Petrol - Camshaft Position (CMP) Sensor RH

Removal and Installation

## Removal

All vehicles

1. Remove the cowl panel grille.
   For additional information, refer to: Cowl Panel Grille (501-02 Front End Body Panels, Removal and Installation).
2. Remove the fuel temperature sensor.
   For additional information, refer to: Fuel Temperature Sensor (303-14B Electronic Engine Controls - V8 4.2L Petrol/V8 S/C 4.2L Petrol, Removal and Installation).
3. Remove the engine compartment support.

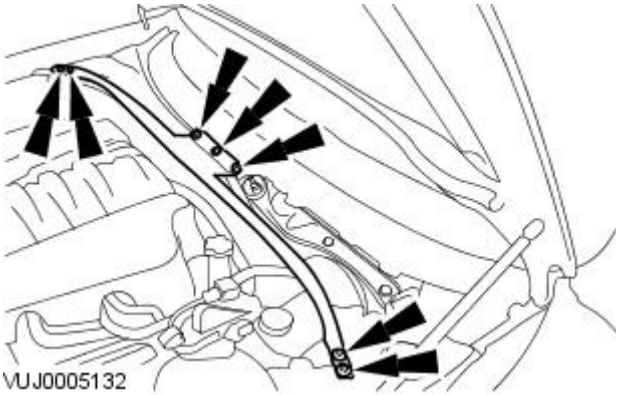


Vehicles without supercharger

4. Detach the wiring harness retaining bracket.

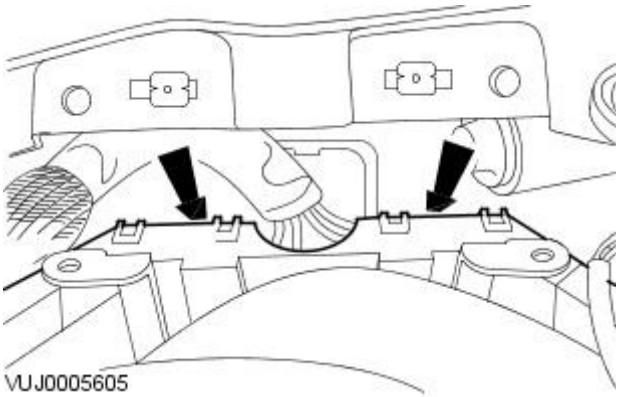


All vehicles

5. Disconnect the camshaft position (CMP) sensor electrical connector.

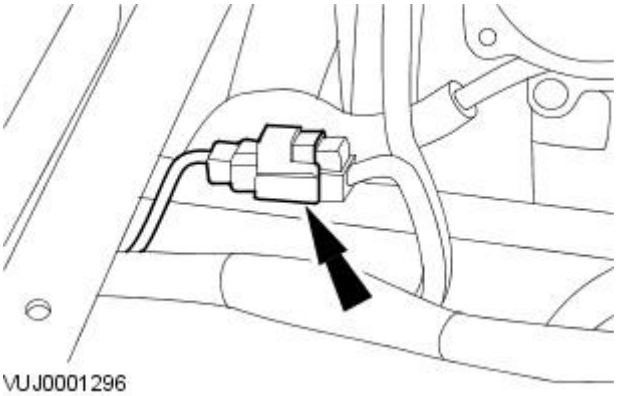


GETtheMANUALS.org

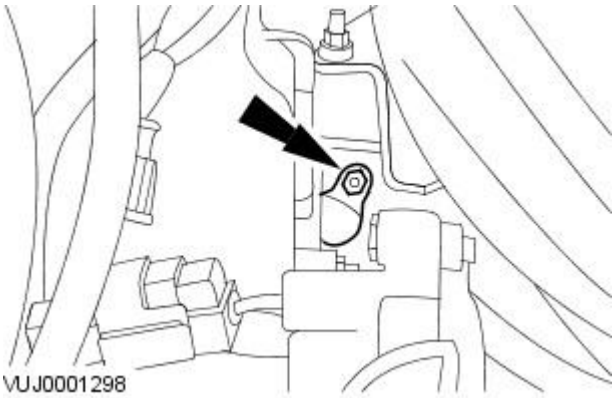


**6.** Remove the CMP sensor.

- Remove and discard the CMP O-ring seal.

## Installation

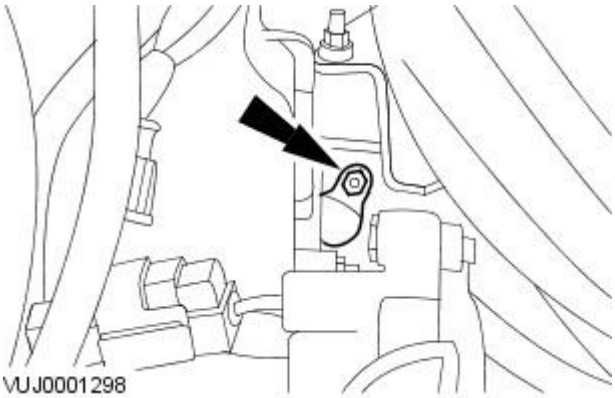


**1.** To install reverse the removal procedure.

- Install a new CMP O-ring seal.
- Tighten to 7 Nm.

GETtheMANUALS.org

# Electronic Engine Controls - V8 4.2L Petrol/V8 S/C 4.2L Petrol - Catalyst Monitor Sensor

Removal and Installation

**General Equipment**

| |
|---|
| Snap-on tool S6176 |

## Removal

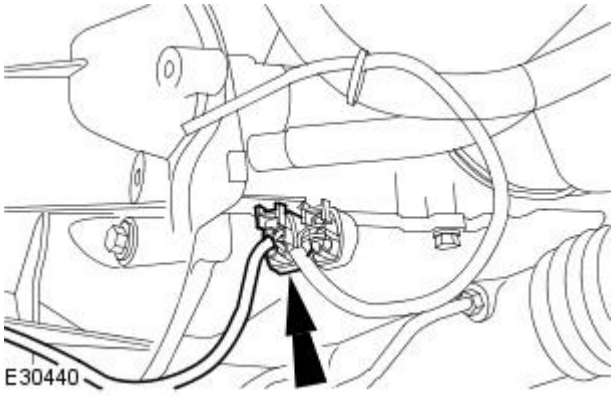


**1.** Raise and support the vehicle.
For additional information, refer to: Lifting (100-02 Jacking and Lifting, Description and Operation).

**2.** Disconnect the catalyst monitor sensor.

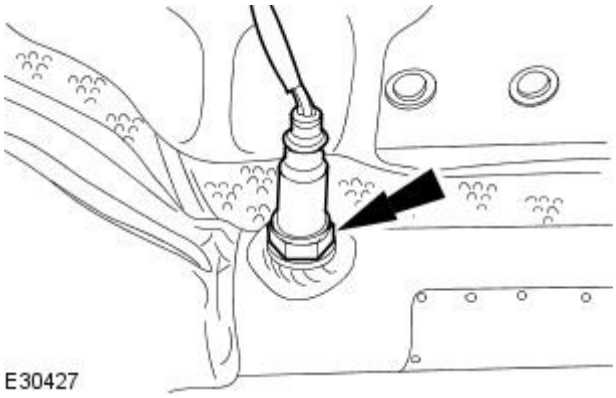


**3.** CAUTION: Make sure the wiring harness is not twisted or damaged on removal. Failure to follow this instruction may result in damage to the vehicle.

Using the Snap-on tool S6176, remove the catalyst monitor sensor.

## Installation

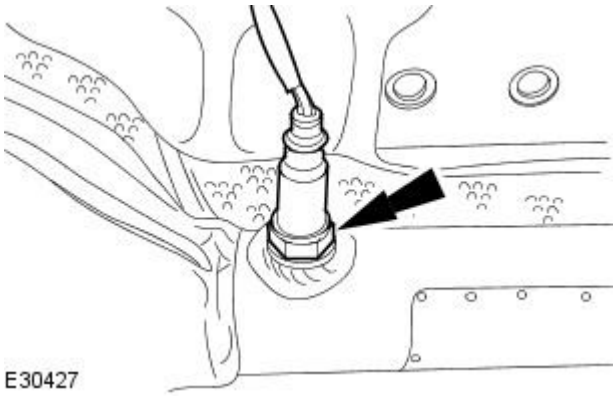


**1.** CAUTION: Make sure the wiring harness is not twisted or damaged on installation. Failure to follow this instruction may result in damage to the vehicle.

To install, reverse the removal procedure.

- Tighten to 45 Nm.

**2.** NOTE: For NAS vehicles only.

If required, carry out a long drive cycle.
For additional information, refer to: Powertrain Control Module (PCM) Long Drive Cycle Self-Test (303-14A Electronic Engine Controls - 2.5L NA V6 - AJV6/3.0L NA V6 - AJ27, General Procedures).

GETtheMANUALS.org

# Electronic Engine Controls - V8 4.2L Petrol/V8 S/C 4.2L Petrol - Crankshaft Position (CKP) Sensor

Removal and Installation

## Removal

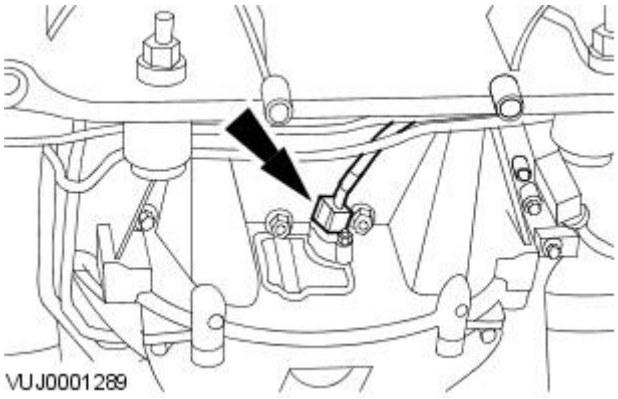


1. Raise and support the vehicle. For additional information refer to Section 100-02 Jacking and Lifting.
2. Disconnect the crankshaft position sensor electrical connector.

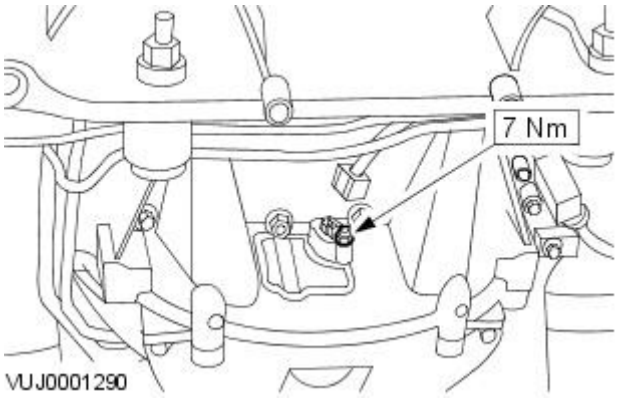


3. Remove the crankshaft position sensor.

## Installation

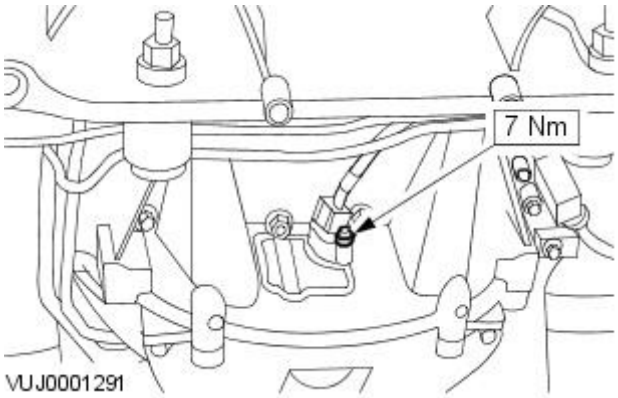


1. To install, reverse removal procedure.

GETtheMANUALS.org

# Electronic Engine Controls - V8 4.2L Petrol/V8 S/C 4.2L Petrol - Engine Control Module (ECM)

Removal and Installation

| Special Tool(s) | |
|---|---|
| 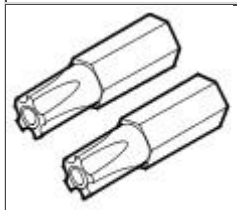 418-535 | 5 point security torx bit<br><br>418-535 |

## Removal

1. Disconnect the battery ground cable.
   For additional information, refer to Section 414-01 Battery, Mounting and Cables.
2. Remove the cabin air filter.
   For additional information, refer to Section 412-01 Air Distribution and Filtering.
3. Remove the engine compartment support.

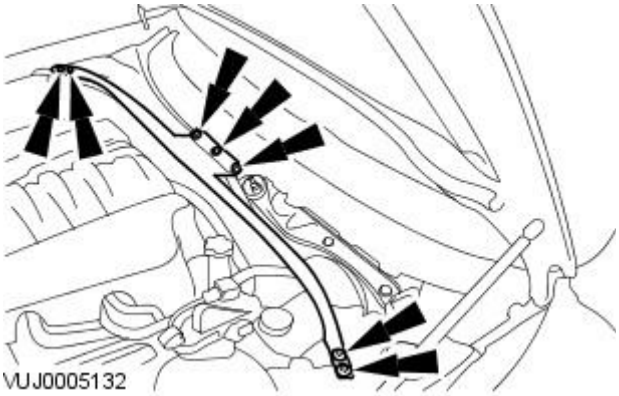


4. Remove the cabin air filter housing retaining nut.

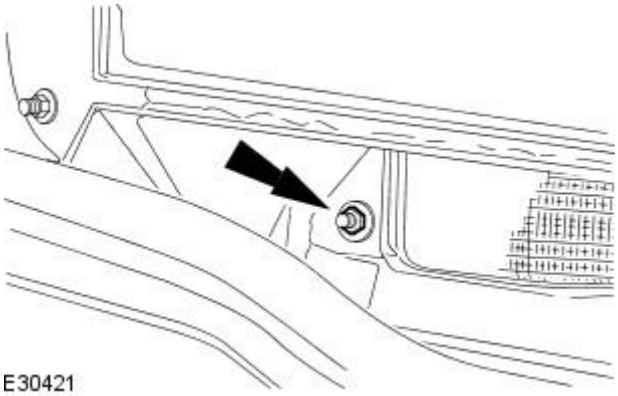


5. Remove the cabin air filter housing.

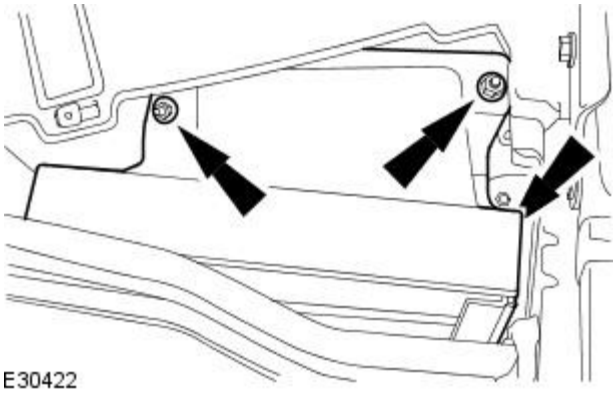


GETtheMANUALS.org

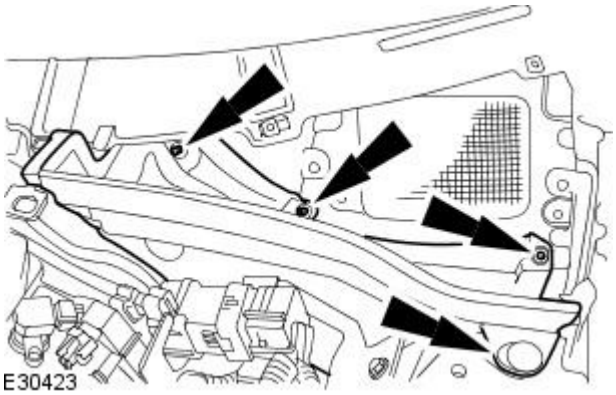


**6.** Remove the engine compartment panel.

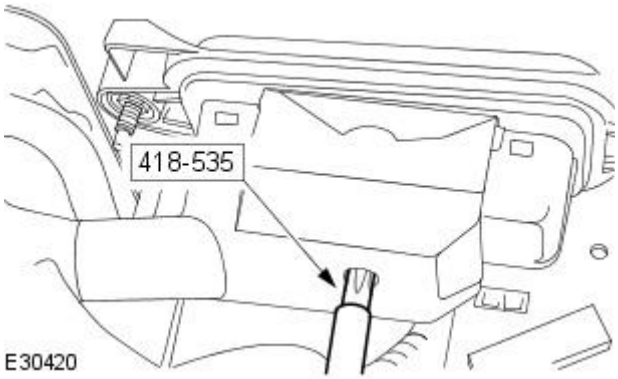


**7.** NOTE: The engine control module (ECM) electrical connector retaining bolt remains captive in the electrical connector

Using the special tool, disconnect the ECM electrical connector.

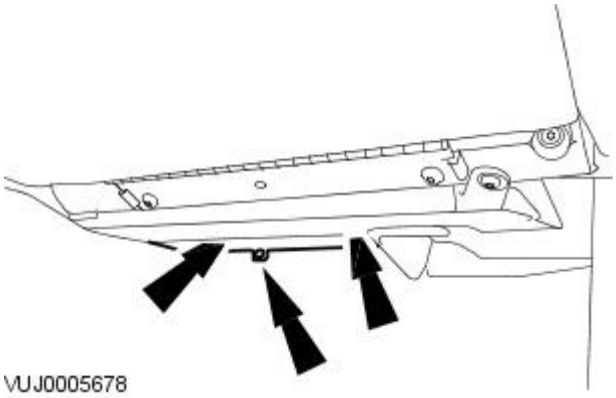


**8.** Remove the passenger side instrument panel lower trim panel.

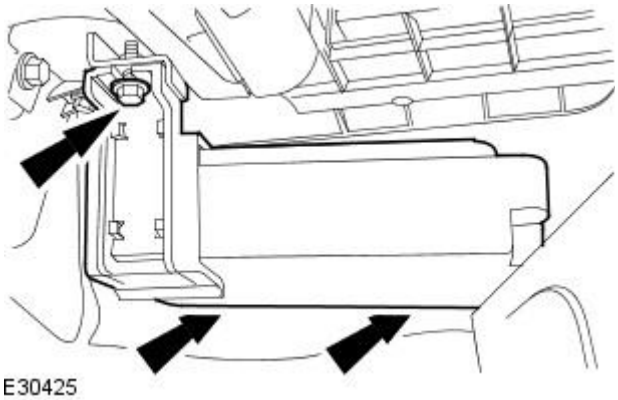


**9.** Remove the ECM.

- Remove the ECM retaining bracket.
- Release the ECM retaining tangs.
- Remove the ECM.

## Installation

**1.** CAUTION: Make sure the electrical connector locate correctly in the engine control module. Do not force or overtighten the electrical connector. Failure to follow these instructions may cause damage to the electrical connector.

To install, reverse the removal procedure.

GETtheMANUALS.org

**2.** Tighten to 6 Nm.

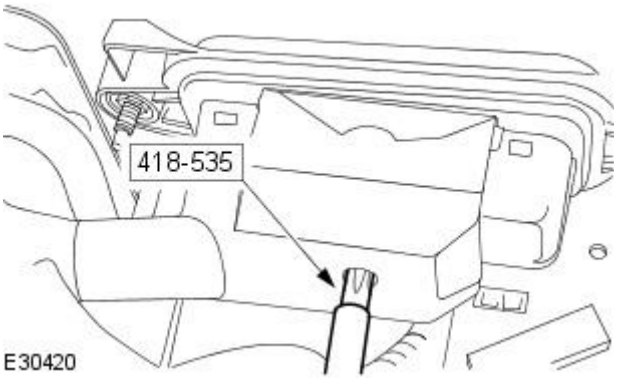


GETtheMANUALS.org

# Electronic Engine Controls - V8 4.2L Petrol/V8 S/C 4.2L Petrol - Engine Coolant Temperature (ECT) Sensor

Removal and Installation

## Removal

All vehicles

**1.** WARNINGS:

Never remove the coolant expansion tank pressure cap under any circumstances while the engine is operating. Failure to follow this instruction may result in personal injury.

To avoid hot coolant or steam blowing out of the cooling system, use extreme care when removing the coolant expansion tank pressure cap. Wait until the engine has cooled down, then insulate the coolant pressure cap with a suitable cloth and slowly loosen the coolant expansion tank pressure cap until the cooling system pressure is released. Do not remove the coolant expansion tank pressure cap. Step back while the pressure is released from the system. When all of the pressure has been released slowly remove the coolant expansion tank pressure cap (still with the suitable cloth in position) from the coolant expansion tank. Failure to follow this instruction may result in personal injury.

Release the cooling system pressure.

- Remove the coolant expansion tank pressure cap.

Vehicles with supercharger

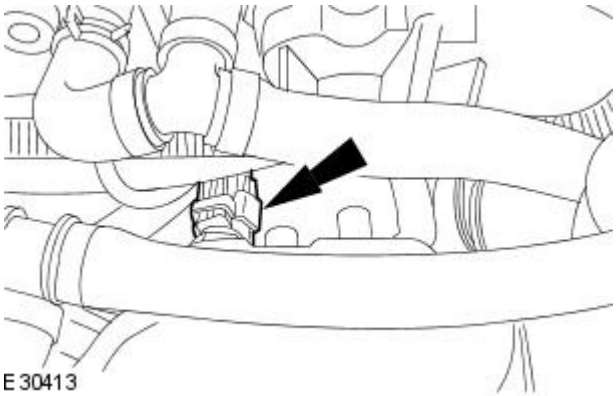


**2.** Disconnect the engine coolant temperature (ECT) sensor electrical connector.

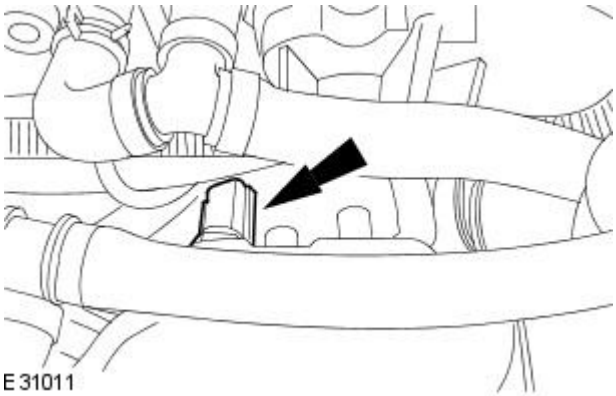


**3.** Remove the ECT.

- Remove and discard the ECT sealing washer.

Vehicles without supercharger

**4.** Remove the air cleaner outlet pipe.
For additional information, refer to: Air Cleaner Outlet Pipe (303-12B Intake Air Distribution and Filtering - V8 4.2L Petrol/V8 S/C 4.2L Petrol, Removal and Installation).

GETtheMANUALS.org

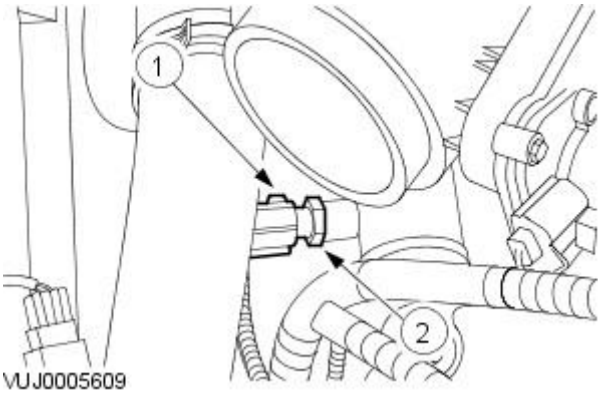


**5.** Remove the engine coolant temperature (ECT) sensor electrical connector.

1. Disconnect the ECT sensor electrical connector.
2. Remove the ECT sensor.

- Remove and discard the ECT sealing washer.

## Installation

All vehicles

**1.** To install, reverse the removal procedure.

- Install a new ECT sealing washer.
- Fill the cooling system up to the MAX mark on the coolant expansion tank.

Vehicles with supercharger

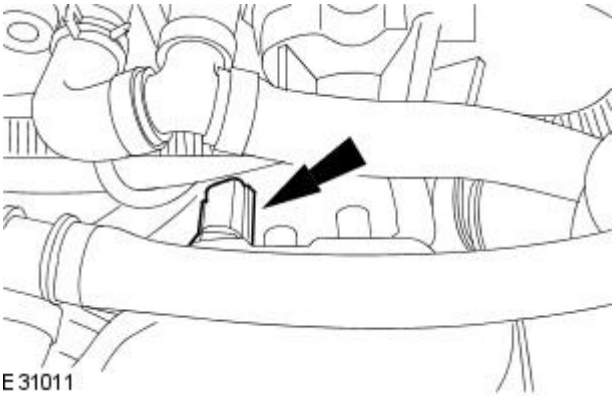


**2.** Tighten to 17 Nm.

Vehicles without supercharger

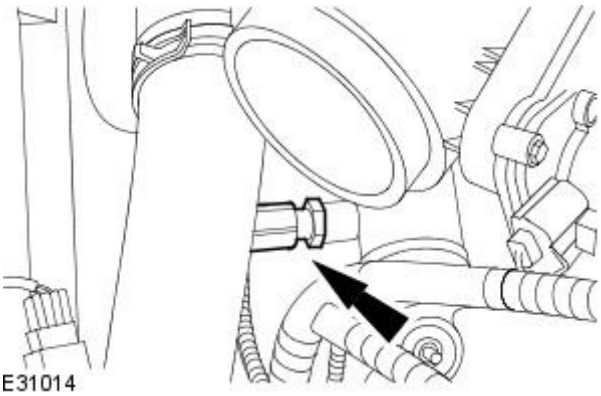


**3.** Tighten to 17 Nm.

GETtheMANUALS.org

# Electronic Engine Controls - V8 4.2L Petrol/V8 S/C 4.2L Petrol - Fuel Temperature Sensor

Removal and Installation

## Removal

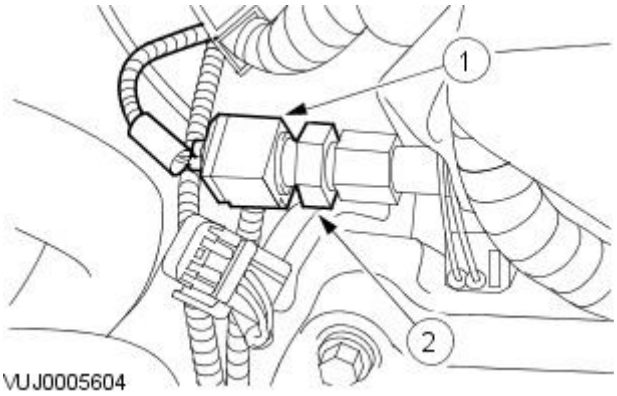


**1.** Remove the fuel temperature sensor.

1. Disconnect the electrical connector.
2. Remove the fuel temperature sensor.

## Installation

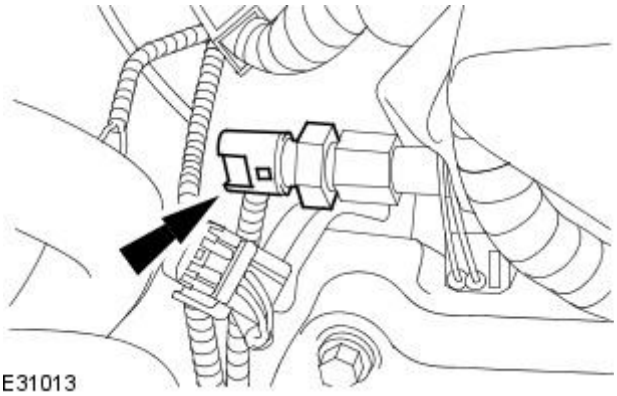


**1.** To install, reverse the removal procedure.

1. Tighten to 7 Nm.

GETtheMANUALS.org

# Electronic Engine Controls - V8 4.2L Petrol/V8 S/C 4.2L Petrol - Heated Oxygen Sensor (HO2S)

Removal and Installation

**General Equipment**

| |
|---|
| Snap-on tool S6176 |

## Removal

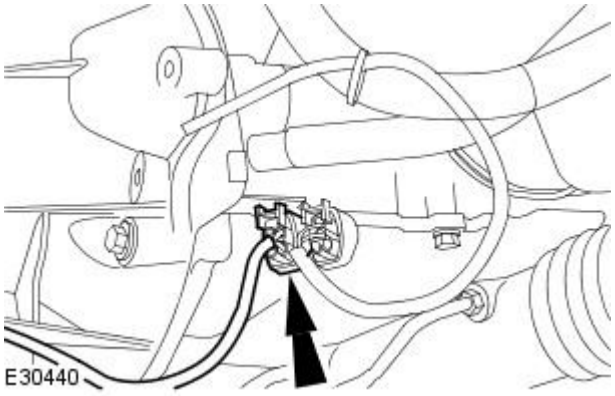


1. Remove the air deflector.
   For additional information, refer to Section 501-02 Front End Body Panels.
2. Disconnect the the heated oxygen (HO2S) sensor.

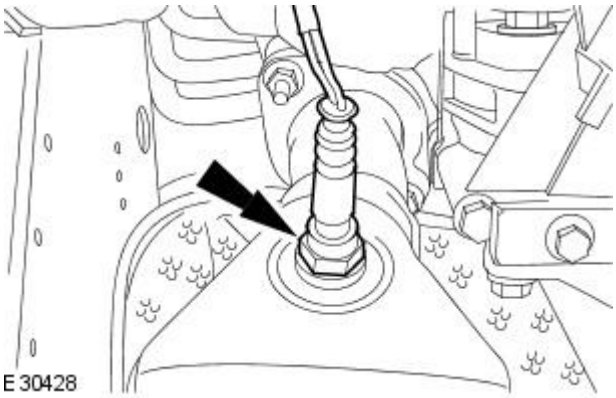


3. CAUTION: Make sure the wiring harness is not twisted or damaged on removal. Failure to follow this instruction may result in damage to the vehicle.

   Using the Snap-on tool S6176, remove the HO2S.

## Installation

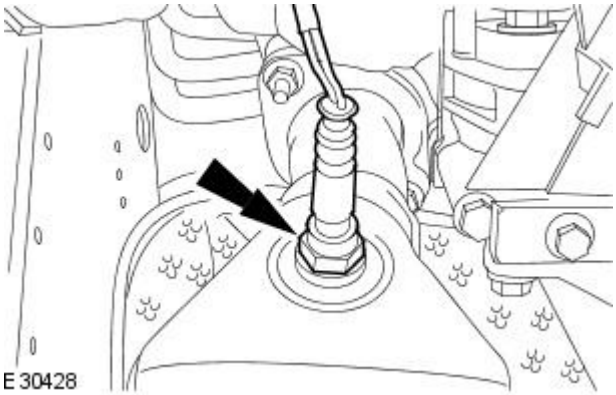


1. CAUTION: Make sure the wiring harness is not twisted or damaged on installation. Failure to follow this instruction may result in damage to the vehicle.

   To install, reverse the removal procedure.

   - Tighten to 45 Nm.

GETtheMANUALS.org

# Electronic Engine Controls - V8 4.2L Petrol/V8 S/C 4.2L Petrol - Intake Air Temperature (IAT) Sensor

Removal and Installation

## Removal

**1.** Disconnect the intake air temperature (IAT) sensor electrical connector.

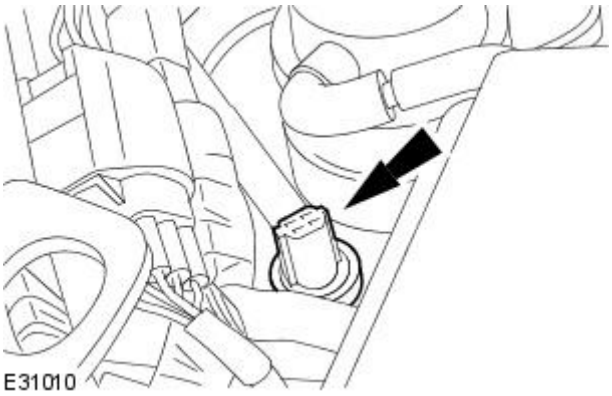


**2.** Remove the IAT sensor.

- Remove and discard the IAT sensor sealing washer.

## Installation

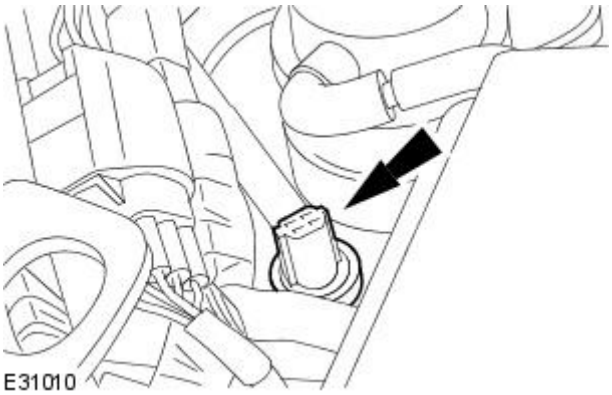


**1.** To install, reverse the removal procedure.

- Install a new IAT sensor sealing washer.
- Tighten to 35 Nm.

GETtheMANUALS.org

# Electronic Engine Controls - V8 4.2L Petrol/V8 S/C 4.2L Petrol - Knock Sensor (KS) LH

Removal and Installation

## Removal

Vehicles with supercharger

1. Remove the supercharger. For additional information, refer to: (303-12B Intake Air Distribution and Filtering - V8 4.2L Petrol/V8 S/C 4.2L Petrol)

   Supercharger - VIN Range: M45255->N52047 (Removal and Installation),
   Supercharger - VIN Range: N52048->N99999 (Removal and Installation).

2. Remove the noise isolator.

Vehicles without supercharger

3. Remove the intake manifold. For additional information, refer to: (303-01B Engine - V8 4.2L Petrol/V8 S/C 4.2L Petrol)

   Intake Manifold - VIN Range: M45255->N52047 (In-vehicle Repair),
   Intake Manifold - VIN Range: N52048->N99999 (In-vehicle Repair).

All vehicles

4. Remove the knock sensor (KS).

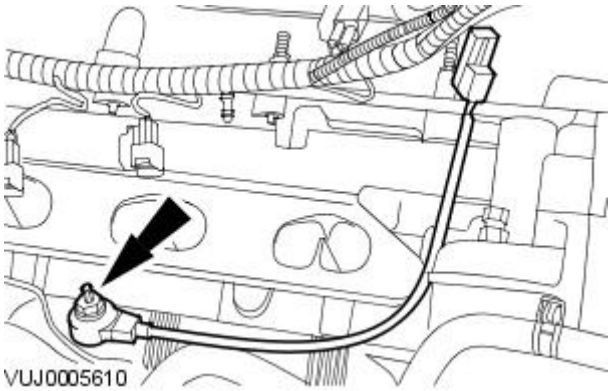


## Installation

1. To install, reverse the removal procedure.
   - Tighten to 25 Nm.

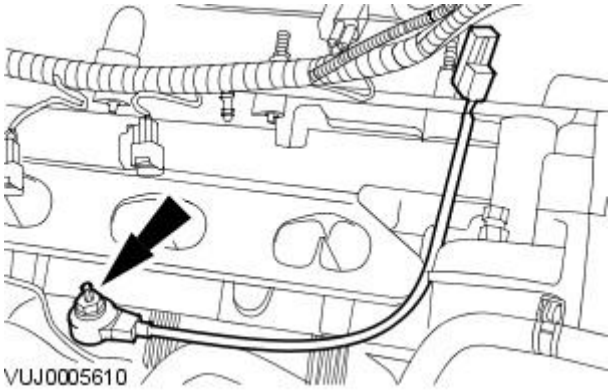


GETtheMANUALS.org

# Electronic Engine Controls - V8 4.2L Petrol/V8 S/C 4.2L Petrol - Manifold Absolute Pressure (MAP) Sensor

Removal and Installation

## Removal

Vehicles without supercharger

1. Remove the intake manifold. For additional information, refer to: (303-01B Engine - V8 4.2L Petrol/V8 S/C 4.2L Petrol)

   Intake Manifold - VIN Range: M45255->N52047 (In-vehicle Repair),
   Intake Manifold - VIN Range: N52048->N99999 (In-vehicle Repair).

Vehicles with supercharger

2. Remove the exhaust gas recirculation (EGR) valve.
   For additional information, refer to: Exhaust Gas Recirculation (EGR) Valve (303-08A Engine Emission Control - V8 4.2L Petrol/V8 S/C 4.2L Petrol/2.5L NA V6 - AJV6/3.0L NA V6 - AJ27, Removal and Installation).
3. Disconnect the air intake elbow pipes.

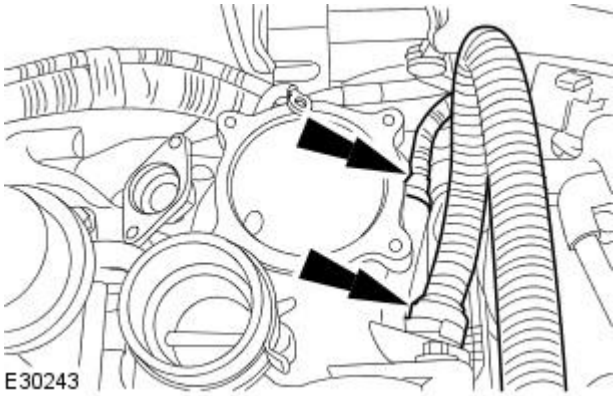


4. NOTE: Make sure that the correct location of the ground strap is noted.

   Remove the air intake elbow retaining bracket lower retaining bolts.

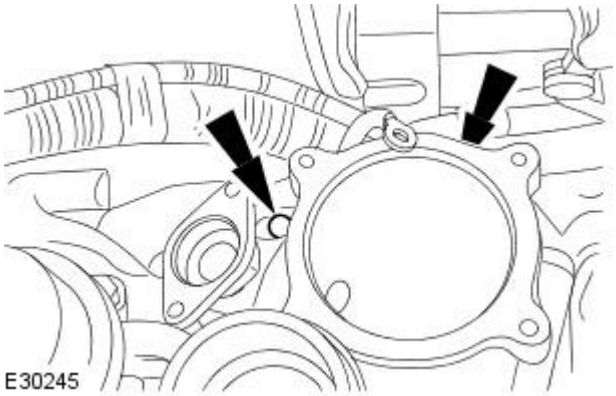


5. Detach the air intake elbow.
   - Remove and discard the gasket.
   - Remove and discard the retaining bolt seals.

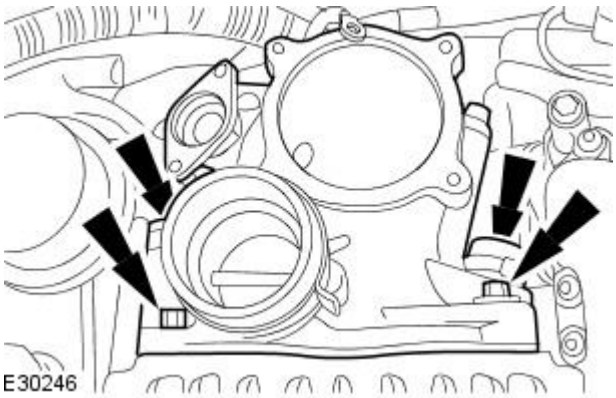


GETtheMANUALS.org

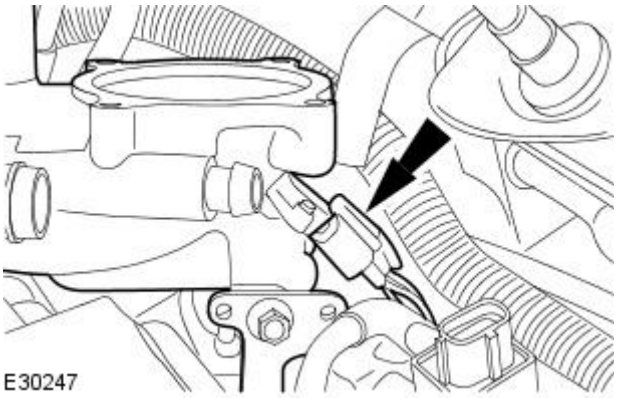


**6.** Remove the air intake elbow.

- Disconnect the manifold absolute pressure (MAP) sensor electrical connector.

All vehicles

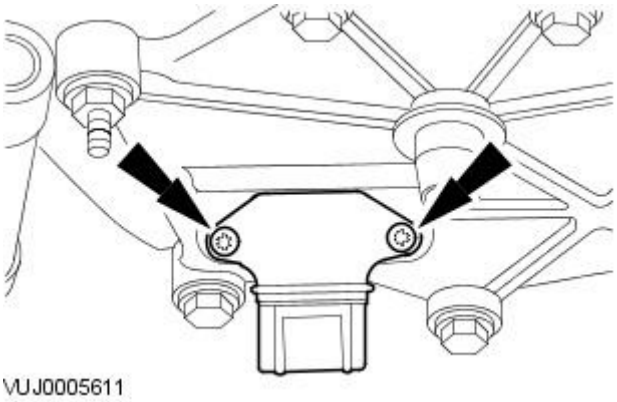


**7.** NOTE: Vehicles without supercharger shown, vehicles with supercharger similar.

Remove the MAP sensor.

- Remove and discard the MAP sensor O-ring seal.

## Installation

All vehicles

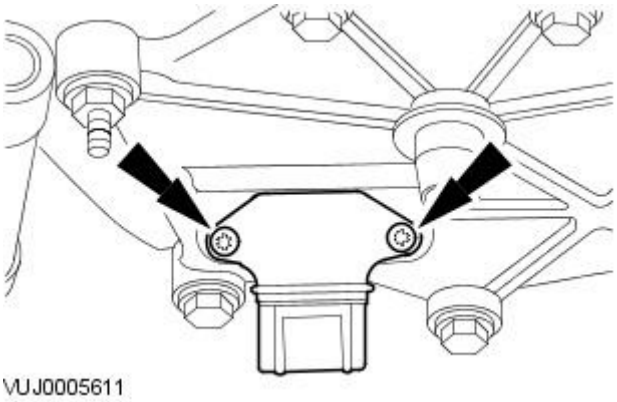


**1.** NOTE: Vehicles without supercharger shown, vehicles with supercharger similar.

Install the MAP sensor.

- Install a new MAP sensor O-ring seal.
- Tighten to 10 Nm.

Vehicles with supercharger

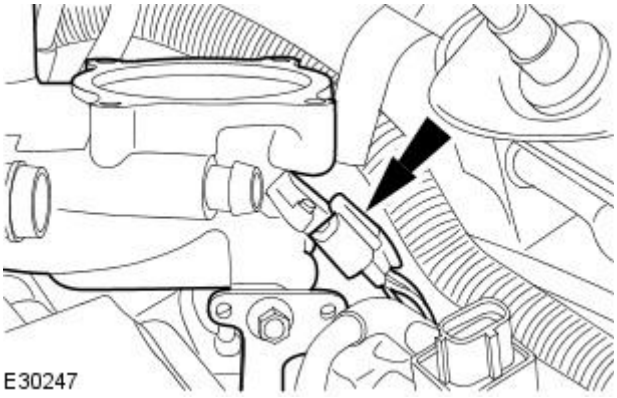


**2.** Connect the MAP sensor electrical connector.

GETtheMANUALS.org

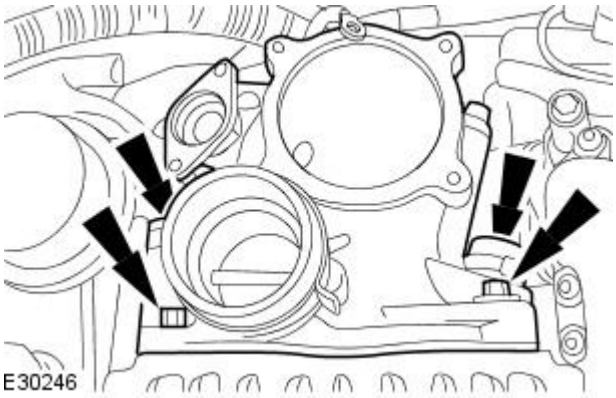


**3.** Install the air intake elbow.

- Install a new gasket.
- Install new retaining bolt seals.
- Tighten to 24 Nm.

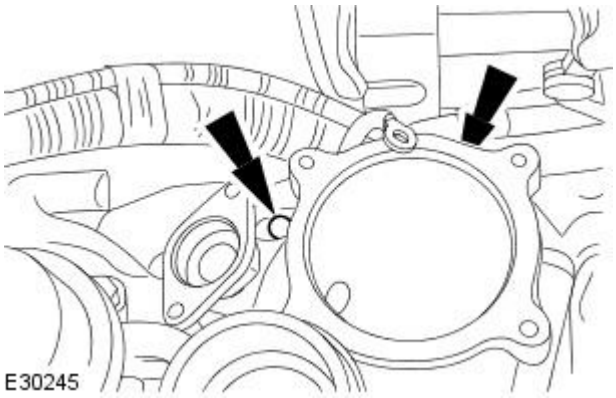


**4.** NOTE: Make sure that the ground strap is correctly installed to the location noted.

Install the air intake elbow retaining bracket lower retaining bolts.

- Tighten to 20 Nm.

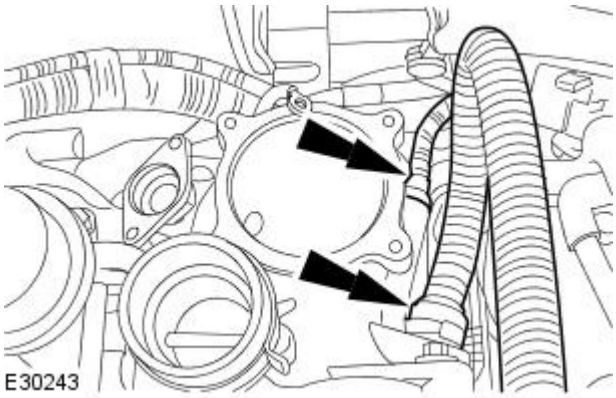


**5.** Connect the air intake elbow pipes.

**6.** Install the EGR valve.
For additional information, refer to: Exhaust Gas Recirculation (EGR) Valve (303-08A Engine Emission Control - V8 4.2L Petrol/V8 S/C 4.2L Petrol/2.5L NA V6 - AJV6/3.0L NA V6 - AJ27, Removal and Installation).

Vehicles without supercharger

**7.** Install the intake manifold. For additional information, refer to:
(303-01B Engine - V8 4.2L Petrol/V8 S/C 4.2L Petrol)

Intake Manifold - VIN Range: M45255->N52047 (In-vehicle Repair),
Intake Manifold - VIN Range: N52048->N99999 (In-vehicle Repair).

**8.** NOTE: For NAS vehicles only.

If required, carry out a short drive cycle.
For additional information, refer to: Powertrain Control Module (PCM) Short Drive Cycle Self-Test (303-14A Electronic Engine Controls - 2.5L NA V6 - AJV6/3.0L NA V6 - AJ27, General Procedures).

GETtheMANUALS.org

# Electronic Engine Controls - V8 4.2L Petrol/V8 S/C 4.2L Petrol - Mass Air Flow (MAF) Sensor

Removal and Installation

## Removal

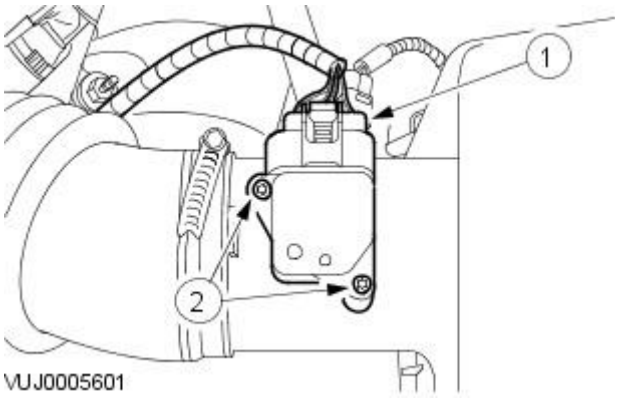


**1.** Remove the mass airflow (MAF) sensor.

1. Disconnect the MAF sensor electrical connector.
2. Remove the mass airflow MAF sensor.

- Remove and discard the MAF sensor O-ring seal.

## Installation

**1.** To install, reverse the removal procedure.

- Install a new MAF sensor O-ring seal.
- Tighten MAF sensor retaining screws to 2 Nm.

**2.** NOTE: For NAS vehicles only.

If required, carry out a short drive cycle.
For additional information, refer to: Powertrain Control Module (PCM) Short Drive Cycle Self-Test (303-14A Electronic Engine Controls - 2.5L NA V6 - AJV6/3.0L NA V6 - AJ27, General Procedures).

GETtheMANUALS.org

# Electronic Engine Controls - V8 4.2L Petrol/V8 S/C 4.2L Petrol - Oil Temperature Sensor

Removal and Installation

## Removal

1. Remove the air deflector.
   For additional information, refer to: Air Deflector (501-02 Front End Body Panels, Removal and Installation).
2. Disconnect the oil temperature sensor electrical connector.

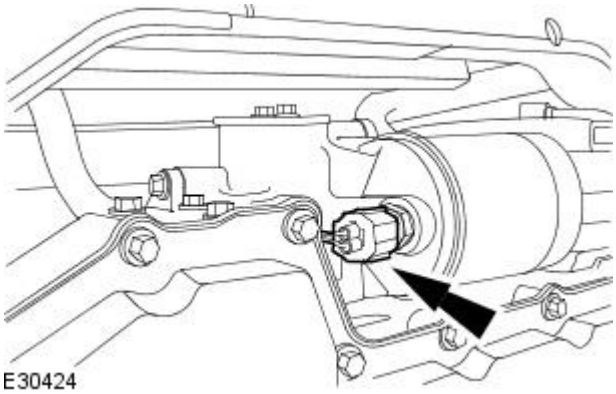


3. Remove the oil temperature sensor.

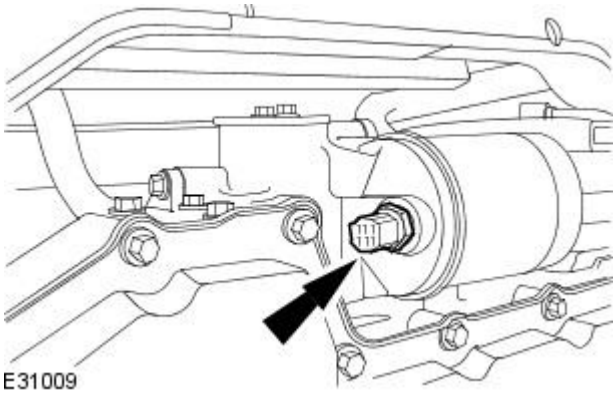


## Installation

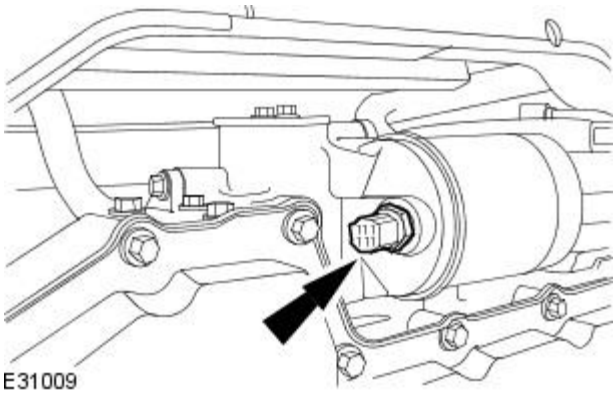


1. NOTE: Apply a small bead of sealant meeting Jaguar specification on the first three threads of the oil temperature sensor.

   To install, reverse the removal procedure

   - Tighten to 15 Nm.

GETtheMANUALS.org

# Electronic Engine Controls - V8 4.2L Petrol/V8 S/C 4.2L Petrol - Variable Camshaft Timing (VCT) Oil Control Solenoid

Removal and Installation

## Removal

1. Remove the valve cover. For additional information, refer to: (303-01B Engine - V8 4.2L Petrol/V8 S/C 4.2L Petrol)

   Valve Cover RH - VIN Range: M45255->N52047 (In-vehicle Repair),
   Valve Cover RH - VIN Range: N52048->N99999 (In-vehicle Repair).

2. Remove the variable camshaft timing (VCT) oil control solenoid.

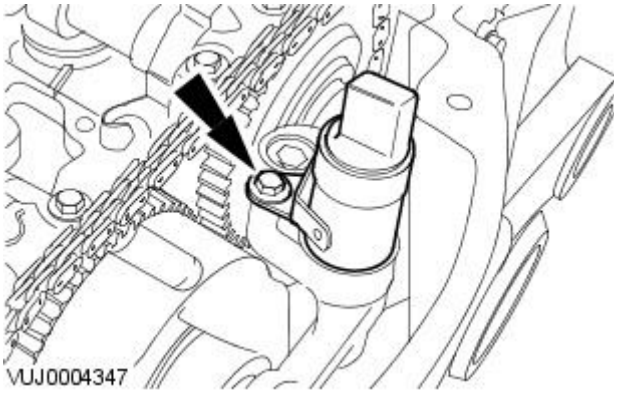


## Installation

1. To install, reverse the removal procedure.
   - Tighten to 10 Nm.

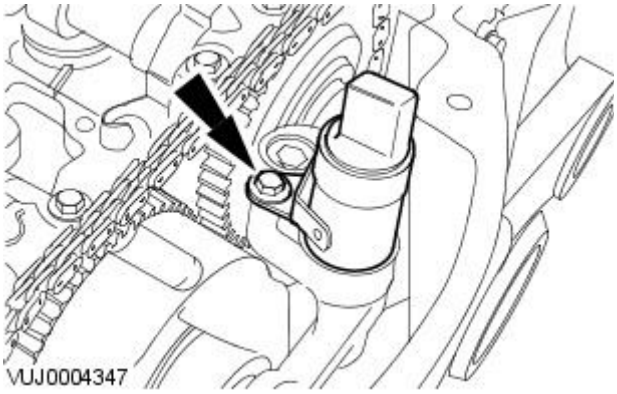


2. NOTE: For NAS vehicles only.

   If required, carry out a short drive cycle.
   For additional information, refer to: Powertrain Control Module (PCM) Short Drive Cycle Self-Test (303-14A Electronic Engine Controls - 2.5L NA V6 - AJV6/3.0L NA V6 - AJ27, General Procedures).

GETtheMANUALS.org

# Electronic Engine Controls - 2.7L V6 - TdV6 -

**Torque Specifications**

| Description | Nm | lb-ft | lb-in |
|---|---|---|---|
| Camshaft position (CMP) sensor retaining bolt | 10 | - | 89 |
| Crankshaft position (CKP) sensor retaining bolt | 5 | - | 44 |
| Engine control module (ECM) retaining bolt | 6 | - | 53 |
| Engine control module (ECM) retaining nuts | 3 | - | 26 |
| Engine oil pressure (EOP) sensor | 15 | 11 | - |
| Knock sensor (KS) Left-Hand retaining bolt | 20 | 15 | - |
| Knock Sensor (KS) Right-Hand retaining bolt | 20 | 15 | - |
| Manifold absolute pressure (MAP) sensor | 3 | - | 26 |
| Mass air flow (MAF) sensor retaining screws | 2 | - | 18 |

GETtheMANUALS.org

# Electronic Engine Controls - 2.7L V6 - TdV6 - Electronic Engine Controls

Description and Operation

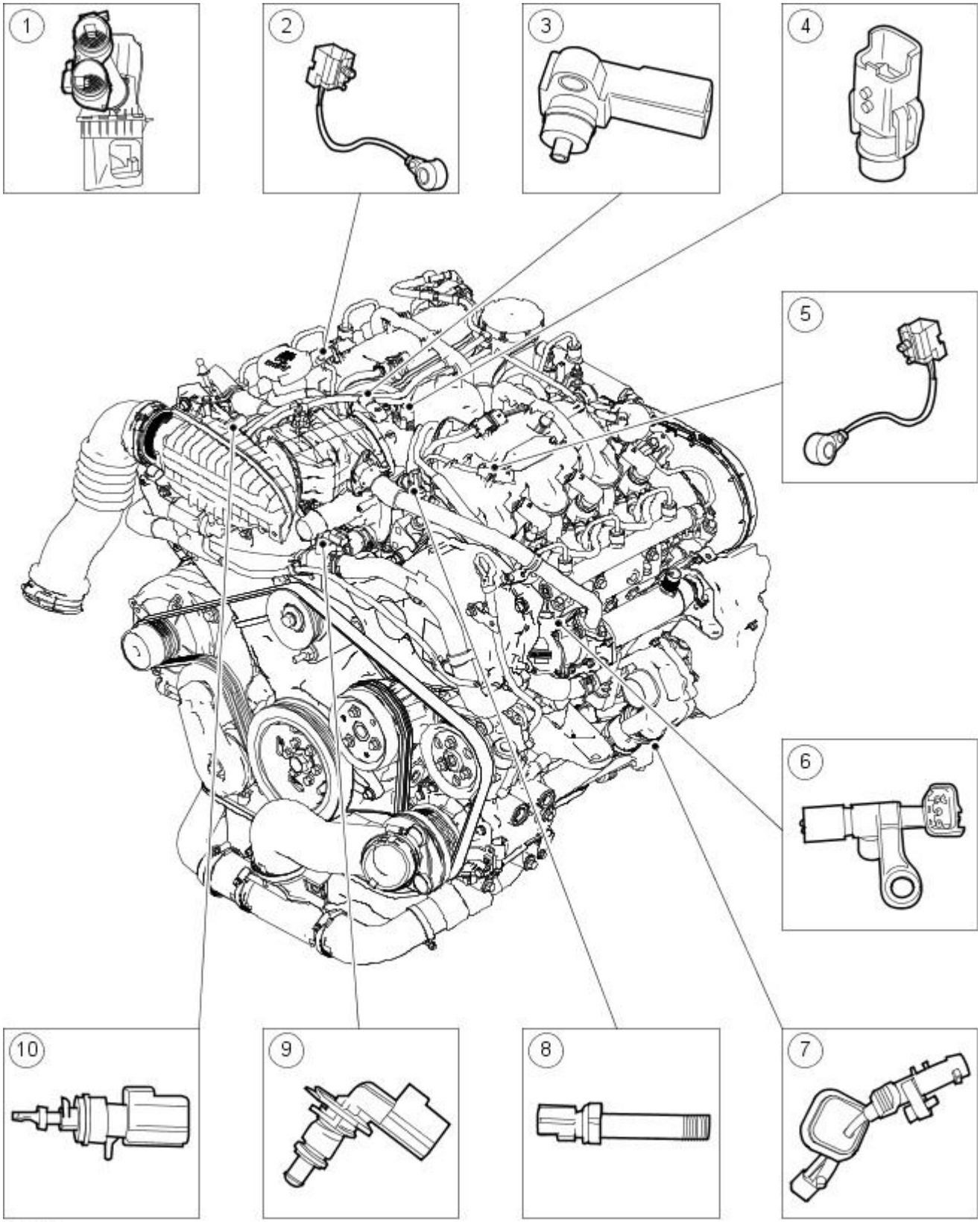


E52346

| Item | Part Number | Description |
|---|---|---|
| 1 | - | Mass air flow (MAF) sensor(s) |
| 2 | - | Knock sensor (KS) RH |
| 3 | - | Manifold absolute pressure (MAP) sensor |
| 4 | - | Fuel temperature sensor |
| 5 | - | Knock sensor (KS) LH |
| 6 | - | Camshaft position (CMP) sensor |
| 7 | - | Crankshaft position (CKP) sensor |
| 8 | - | Engine oil pressure (EOP) sensor |
| 9 | - | Engine coolant temperature (ECT) sensor |
| 10 | - | Charge air temperature sensor |

GETtheMANUALS.org

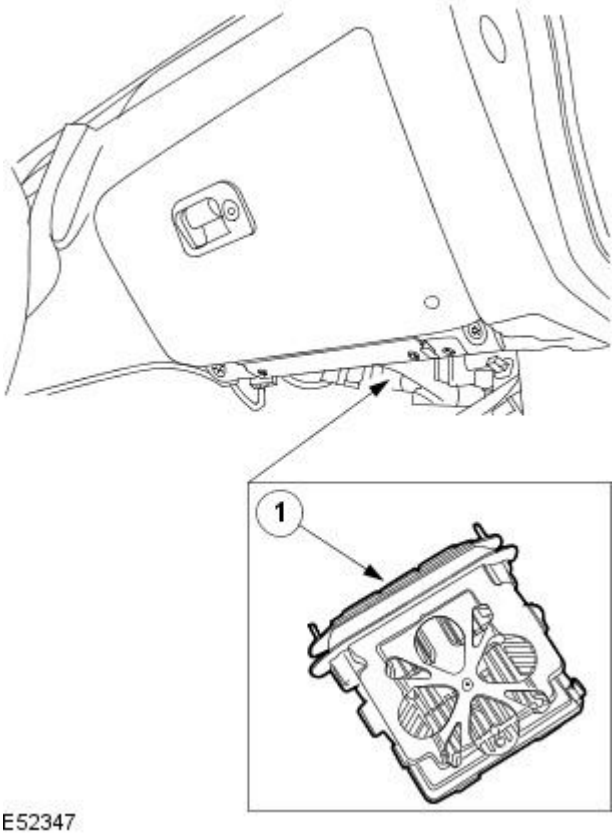


| Item | Part Number | Description |
|---|---|---|
| 1 | - | Engine control module (ECM) |

## System Components

All engine functions are controlled by the Siemens common rail ECM.

## ECM

The ECM is a high capacity processor which employs advanced software strategies that continuously control the engines operating parameters. It gathers information from a number of sensors and provides output to the actuators. The ECM also operates a port deactivation system, which closes or opens flaps in the inlet system to provide the optimum swirl and flow conditions throughout the operating range of the engine.

In addition, the ECM controls the actuation of the exhaust gas recirculation (EGR) system, the variable geometry turbochargers and the throttle, giving faster and more accurate response. A full torque-based strategy supports multiple injection control and integration with transmission and braking controllers. Transient torque and boost control enables vehicle performance to be optimised without compromising engine durability.

## CKP Sensor

The CKP sensor signal is used to determine:

- the quantity of fuel to be injected
- the start of fuel delivery
- the quantity of exhaust gases to be recirculated

The CKP sensor is located at the rear of the crankshaft behind the flywheel.

The CKP sensor is a Hall effect sensor which scans a magnetic disc on the crankshaft. The air gap between the magnetic disc and the CKP is predetermined by the mounting of the sensor.

## CMP Sensor

The CMP is located on the cylinder head behind the left-hand camshaft timing belt pulley.

The CMP sensor is Hall effect type and is required to identify cylinder number 1. (This is to synchronise engine to camshaft timing). The sensor scans a web incorporated into the left- hand camshaft timing belt pulley. The air gap between the magnetic ring and the CMP sensor is predetermined by the mounting of the sensor.

## ECT Sensor

The ECT sensor is a NTC type sensor and is fitted into the top water outlet hose. The sensor has a bayonet type fitting.

## KS

The KS registers increased vibrations which occur due to increased combustion noise. The ECM uses the signal as a correction factor for calculating the quantity and timing of the fuel to be injected during the injection phase.

There are two KS fitted to each bank of the cylinder block.

## MAF Sensor

GETtheMANUALS.org

The MAF sensor is used to calculate the air mass. The MAF sensor is capable of detecting the mass air flow extremely precisely.

On engines with a variable turbocharger, the MAF sensor is used solely to control the EGR and not the fuel metering. The MAF sensor also incorporates the intake air temperature (IAT) sensor.

## MAP Sensor

The MAP sensor is located in the top of the throttle valve.

The MAP sensor measures the charging pressure in the intake pipe and sends the ECM an analog voltage signal.

## Charge Air Temperature Sensor

The charge air temperature sensor measures the intake air or the charge air temperature and supplies the ECM with an analog signal.

The charge air temperature sensor is located in the air intake plenum chamber.

## Intake Air Temperature (IAT) Sensor

The IAT sensor measures the intake air temperature and supplies the ECM with an analog signal.

There are two IAT sensors incorporated into the MAF sensor, the LH bank IAT sensor is not monitored by the ECM.

## Fuel Rail Pressure (FRP) Sensor

The FRP sensor measures the instantaneous fuel pressure in the fuel rail very precisely within a very short time and supplies a voltage signal according to the pressure. The FRP is located on the the fuel diverter rail and must not be removed from the diverter rail.
For additional information, refer to: Fuel Charging and Controls (303-04C Fuel Charging and Controls - 2.7L V6 - TdV6, Description and Operation).

## Fuel Temperature Sensor

The fuel temperature sensor measures the temperature of the fuel in the low-pressure system. Air and excessive heat in the fuel system can have an adverse effect on the operation of the sensor.

The fuel temperature sensor is located in the low-pressure side return line behind the throttle body housing.

## EOP Sensor

The engine oil pressure (EOP) sensor is located in the left-hand cylinder head. The EOP is connected to the instrument cluster and is not directly part of the electronic engine control system.

GETtheMANUALS.org

# Electronic Engine Controls - 2.7L V6 - TdV6 - Electronic Engine Controls

Diagnosis and Testing

## Principle of operation

Common rail diesel

The 2.7L fuel injection system is a common-rail design, running at the high pressures (up to 1,650 bar or 23,931 lb/in²) typical of such systems.

The fuel is drawn from the fuel tank by an electric lift pump and delivered to the transfer pump side of a high pressure fuel pump (HPFP) driven by the engine. For additional information on the HPFP,
REFER to: Fuel Charging and Controls (303-04C Fuel Charging and Controls - 2.7L V6 - TdV6, Description and Operation).

The fuel volume control valve (FVCV) regulates the amount of fuel supplied to the high pressure side of the HPFP, while the fuel pressure control valve (FPCV) regulates the pressure. Both valves are controlled by the engine control module (ECM) using inputs from the engine management sensors covered in this section.

The high pressure fuel is delivered to the fuel rail where it is stored, ready for use by the injectors.

The fuel injectors are Piezo type, and are controlled by the ECM using inputs from the engine management sensors covered in this section.

The injectors operate in stages, giving a pilot injection before the main injection to reduce detonation noise and help improve the efficiency of the engine. For additional information on the fuel injectors,
REFER to: Fuel Charging and Controls (303-04C Fuel Charging and Controls - 2.7L V6 - TdV6, Description and Operation).

For additional information on the description and operation of the system,
REFER to: Electronic Engine Controls (303-14C Electronic Engine Controls - 2.7L V6 - TdV6, Description and Operation).

## Inspection and verification

• WARNINGS:

Do **NOT** carry out any work on the fuel system with the engine running. The fuel pressure within the system can be as high as 1,650 bar (23,931 lb/in²). Failure to follow this instruction may result in personal injury.

Before performing any work on the fuel system, allow a minimum of 30 seconds to elapse after stopping the engine to allow the fuel system pressure to drop. Failure to follow this instruction may result in personal injury.

Eye protection must be worn at all times when working on or near any fuel related components. Failure to follow this instruction may result in personal injury.

This procedure involves fuel handling. Be prepared for fuel spillage at all times and always observe fuel handling precautions. Failure to follow this instruction may result in personal injury.

After carrying out repairs, the fuel system must be checked visually for leaks. This should be done after the engine has been run, but with the engine switched **OFF**. Failure to follow this instruction may result in personal injury.

If fuel is taken internally, **DO NOT** induce vomiting. Seek immediate medical attention. Failure to follow this instruction may result in personal injury.

If fuel contacts the eyes, flush the eyes with cold water or eyewash solution and seek medical attention. Failure to follow this instruction may result in personal injury.

Wash hands thoroughly after handling, as prolonged contact may cause irritation. Should irritation develop, seek medical attention. Failure to follow this instruction may result in personal injury.

• CAUTIONS:

Before disconnecting any part of the system, it is imperative that all dust, dirt and debris is removed from around components to prevent ingress of foreign matter into the fuel system. Failure to follow this instruction may result in damage to the vehicle.

The fuel pipes between the injectors and the rail must be discarded after each use, and new pipes installed. Failure to follow this instruction may result in damage to the vehicle.

It is essential that absolute cleanliness is observed when working with these components. Always install blanking plugs to any open orifices or lines. Failure to follow this instruction may result in damage to the vehicle.

Make sure that the workshop area in which the vehicle is being worked on is as clean and dust-free as possible. Areas in which work on clutches, brakes or where welding or machining are carried out are not suitable in view of the risk of contamination to the fuel system. Failure to follow this instruction may result in damage to the vehicle.

Make sure that any protective clothing worn is clean and made from lint-free non-flocking material. Failure to follow this instruction may result in damage to the vehicle.

GETtheMANUALS.org

Make sure that any protective gloves worn are new and are of the non-powdered latex type. Failure to follow this instruction may

result in damage to the vehicle.

Make sure that clean, non-plated tools are used. Clean tools using a new brush that will not lose it's bristles and fresh cleaning fluid prior to starting work on the vehicle. Failure to follow this instruction may result in damage to the vehicle.

Use a steel-topped work bench and cover it with clean, lint-free, non-flocking material. Failure to follow this instruction may result in damage to the vehicle.

When probing connectors to take measurements in the course of the pinpoint tests, use the adaptor kit, part number 3548-1358-00. Failure to follow this instruction may result in damage to the vehicle.

• NOTE: This section contains references to Parameter Identifiers (PIDs). Where the Jaguar approved diagnostic system is not available, a scantool may be used to access these PIDs, all of which give information, and some of which can be used to both read information and to activate components. The format of the information may vary, depending on the tool used.

• NOTE: When performing voltage or resistance tests, always use a digital multimeter (DMM) accurate to 3 decimal places, and with an up-to-date calibration certificate. When testing resistance, always take the resistance of the DMM leads into account.

• NOTE: Check and rectify basic faults before beginning diagnostic routines involving pinpoint tests.

• NOTE: If diagnostic trouble codes (DTCs) are recorded and the symptom is not present when performing the pinpoint tests, an intermittent concern may be the cause. Always check for loose connections and corroded terminals.

1. **1.** Verify the customer concern.
2. **2.** Visually inspect for obvious signs of mechanical or electrical damage.

**Visual Inspection Chart**

| Mechanical | Electrical |
|---|---|
| • Engine oil level<br>• Cooling system coolant level<br>• Fuel contamination | • Fuses<br>• Wiring harness<br>• Electrical connector(s)<br>• Sensor(s)<br>• Engine control module (ECM) |

3. **3.** Verify the following systems are working correctly:

- Air intake system,
  REFER to: Intake Air Distribution and Filtering (303-12C Intake Air Distribution and Filtering - 2.7L V6 - TdV6, Diagnosis and Testing).
- Cooling system,
  REFER to: Engine Cooling (303-03C Engine Cooling - 2.7L V6 - TdV6, Diagnosis and Testing).
- Charging system,
  REFER to: Charging System - V8 4.2L Petrol/V8 S/C 4.2L Petrol/2.5L NA V6 - AJV6/3.0L NA V6 - AJ27 (414-00 Battery and Charging System - General Information, Diagnosis and Testing).
- Fuel charging system,
  REFER to: Fuel Charging and Controls (303-04C Fuel Charging and Controls - 2.7L V6 - TdV6, Diagnosis and Testing).
- Turbocharger system,
  REFER to: Turbocharger (303-04D Fuel Charging and Controls - Turbocharger - 2.7L V6 - TdV6, Diagnosis and Testing).

4. **4.** If an obvious cause for an observed or reported concern is found, correct the cause (if possible) before proceeding to the next step.
5. **5.** If the concern is not visually evident and the Jaguar approved diagnostic system is not available, use a fault code reader to retrieve the fault codes before proceeding to the DTC index chart.
6. **6.** Make sure that a power supply and ground to the ECM are present before carrying out diagnostic work on the engine management system.

## Symptom chart

| Symptom | Possible source | Action |
|---|---|---|
| Engine cranks, but does not start | • Inertia fuel shutoff switch<br>• Low/Contaminated fuel<br>• Lift pump fault<br>• Blocked fuel filter<br>• FVCV blocked/contaminated<br>• FPCV blocked/contaminated<br>• High-pressure fuel pump failure<br>• Low-pressure circuit fault | Check that the inertia switch has not tripped. Check the fuel level/condition. Check the lift pump operation,<br>REFER to: Fuel Pump Module - V8 4.2L Petrol/V8 S/C 4.2L Petrol/2.5L NA V6 - AJV6/3.0L NA V6 - AJ27, VIN Range: N52048->N99999 (310-01 Fuel Tank and Lines, Removal and Installation).<br>Check the fuel filter,<br>REFER to: Fuel Filter - 2.7L V6 - TdV6 (310-01 Fuel Tank and Lines, Removal and Installation).<br>Check the fuel volume and pressure control valves,<br>REFER to: Fuel Charging and Controls (303-04C Fuel Charging and Controls - 2.7L V6 - TdV6, Diagnosis and Testing).<br>Check the mechanical pump components,<br>REFER to: Fuel Injection Pump (303-04C Fuel Charging and Controls - 2.7L V6 - TdV6, Removal and Installation).<br>Check the low-pressure circuit for leaks, etc.<br>REFER to: Fuel Tank and Lines (310-01 Fuel Tank and Lines, Diagnosis and Testing). |
| Difficult to start | • Low/Contaminated fuel<br>• Lift pump fault<br>• Blocked fuel filter<br>• FVCV blocked/contaminated<br>• FPCV blocked/contaminated<br>• Low-pressure circuit fault | Check the fuel level/condition. Check the lift pump operation,<br>REFER to: Fuel Pump Module - V8 4.2L Petrol/V8 S/C 4.2L Petrol/2.5L NA V6 - AJV6/3.0L NA V6 - AJ27, VIN Range: N52048->N99999 (310-01 Fuel Tank and Lines, Removal and Installation).<br>Check the fuel filter,<br>REFER to: Fuel Filter - 2.7L V6 - TdV6 (310-01 Fuel Tank and Lines, Removal and Installation).<br>Check the fuel volume and pressure control valves,<br>REFER to: Fuel Charging and Controls (303-04C Fuel Charging and Controls - 2.7L V6 - TdV6, Diagnosis and Testing).<br>Check the low-pressure circuit for leaks, etc. |

GETtheMANUALS.org

| Symptom | Possible source | Action |
|---|---|---|
| | | REFER to: Fuel Tank and Lines (310-01 Fuel Tank and Lines, Diagnosis and Testing). |
| Rough idle | • Low/Contaminated fuel<br>• Blocked fuel filter<br>• Low-pressure circuit fault | Check the fuel level/condition. Check the fuel filter,<br>REFER to: Fuel Filter - 2.7L V6 - TdV6 (310-01 Fuel Tank and Lines, Removal and Installation).<br>Check the low-pressure circuit for leaks, etc.<br>REFER to: Fuel Tank and Lines (310-01 Fuel Tank and Lines, Diagnosis and Testing). |
| Lack of power when accelerating | • Air intake circuit fault<br>• Low/Contaminated fuel<br>• Catalyst blocked<br>• FVCV blocked/contaminated<br>• FPCV blocked/contaminated<br>• Low fuel pressure<br>• Low-pressure circuit fault<br>• EGR valve fault<br>• Turbocharger fault | Check the air intake circuit,<br>REFER to: Intake Air Distribution and Filtering (303-12C Intake Air Distribution and Filtering - 2.7L V6 - TdV6, Diagnosis and Testing).<br>Check for a blocked catalytic converter,<br>REFER to: Exhaust System - VIN Range: M45255->N13088 (309-00 Exhaust System, Diagnosis and Testing).<br>Check the fuel volume and pressure control valves,<br>REFER to: Fuel Charging and Controls (303-04C Fuel Charging and Controls - 2.7L V6 - TdV6, Diagnosis and Testing).<br>Check the fuel pressure PID, For EGR tests,<br>REFER to: Engine Emission Control (303-08B Engine Emission Control - 2.7L V6 - TdV6, Diagnosis and Testing).<br>For turbocharger tests,<br>REFER to: Turbocharger (303-04D Fuel Charging and Controls - Turbocharger - 2.7L V6 - TdV6, Diagnosis and Testing). |
| Engine stops/stalls | • Low/Contaminated fuel<br>• Low-pressure circuit fault<br>• Inertia fuel shutoff (IFS) switch<br>• FVCV blocked/contaminated<br>• FPCV blocked/contaminated<br>• High-pressure leak | Check the fuel level/condition. Check the low-pressure circuit for leaks, etc,<br>REFER to: Fuel Tank and Lines (310-01 Fuel Tank and Lines, Diagnosis and Testing).<br>Check the fuel volume and pressure control valves,<br>REFER to: Fuel Charging and Controls (303-04C Fuel Charging and Controls - 2.7L V6 - TdV6, Diagnosis and Testing).<br>Check for fuel system leaks. |
| Engine judders | • Low/Contaminated fuel<br>• Low-pressure circuit fault<br>• FVCV blocked/contaminated<br>• FPCV blocked/contaminated<br>• Transmission or driveline concerns | Check the fuel level/condition. Check the low-pressure circuit for leaks, etc,<br>REFER to: Fuel Tank and Lines (310-01 Fuel Tank and Lines, Diagnosis and Testing).<br>Check the fuel volume and pressure control valves,<br>REFER to: Fuel Charging and Controls (303-04C Fuel Charging and Controls - 2.7L V6 - TdV6, Diagnosis and Testing).<br>For driveline information,<br>REFER to: Driveline System (205-00 Driveline System - General Information, Description and Operation) /<br>Transmission Description (307-01 Automatic Transmission/Transaxle, Description and Operation) /<br>Manual Transmission and Clutch (308-00 Manual Transmission/Transaxle and Clutch - General Information, Description and Operation). |
| Excessive fuel consumption | • Low-pressure circuit fault<br>• Fuel temperature sensor leak<br>• Injector(s) failure<br>• Blocked fuel filter | Check the low-pressure circuit for leaks, etc. Check for fuel system leaks, Check for injector DTCs.<br>REFER to: Fuel Charging and Controls (303-04C Fuel Charging and Controls - 2.7L V6 - TdV6, Diagnosis and Testing). |

## DTC index

| DTC | Condition | Possible source | Action |
|---|---|---|---|
| P0001 | Fuel volume control valve (FVCV) | • FVCV circuit: high resistance<br>• FVCV circuit: short circuit to ground<br>• FVCV circuit: short circuit to power<br>• FVCV failure<br>• ECM failure | For FVCV and circuit tests,<br>REFER to: Fuel Charging and Controls (303-04C Fuel Charging and Controls - 2.7L V6 - TdV6, Diagnosis and Testing). |
| P0002 | Fuel volume control valve (FVCV) | • FVCV circuit: high resistance<br>• FVCV circuit: short circuit to ground<br>• FVCV circuit: short circuit to power<br>• FVCV failure<br>• ECM failure | For FVCV and circuit tests,<br>REFER to: Fuel Charging and Controls (303-04C Fuel Charging and Controls - 2.7L V6 - TdV6, Diagnosis and Testing). |
| P0003 | Fuel volume control valve (FVCV) | • FVCV circuit: high resistance<br>• FVCV circuit: short circuit to ground<br>• FVCV circuit: short circuit to power<br>• FVCV failure<br>• ECM failure | For FVCV and circuit tests,<br>REFER to: Fuel Charging and Controls (303-04C Fuel Charging and Controls - 2.7L V6 - TdV6, Diagnosis and Testing). |
| P0004 | Fuel volume control valve (FVCV) | • FVCV circuit: high resistance<br>• FVCV circuit: short circuit to ground<br>• FVCV circuit: short circuit to power<br>• FVCV failure<br>• ECM failure | For FVCV and circuit tests,<br>REFER to: Fuel Charging and Controls (303-04C Fuel Charging and Controls - 2.7L V6 - TdV6, Diagnosis and Testing). |
| P0045 | Variable geometry turbocharger actuator 1 | • Turbocharger actuator circuit: high resistance<br>• Turbocharger actuator circuit: short circuit to ground<br>• Turbocharger actuator | For turbocharger and circuit tests,<br>REFER to: Turbocharger (303-04D Fuel Charging and Controls - Turbocharger - 2.7L V6 - TdV6, Diagnosis and Testing). |

GETtheMANUALS.org

| DTC | Condition | Possible source | Action |
|---|---|---|---|
| | | circuit: short circuit to power<br>• Turbocharger actuator failure<br>• ECM failure | |
| P0046 | Variable geometry turbocharger actuator 1 | • Turbocharger actuator circuit: high resistance<br>• Turbocharger actuator circuit: short circuit to ground<br>• Turbocharger actuator circuit: short circuit to power<br>• Turbocharger actuator failure<br>• ECM failure | For turbocharger and circuit tests,<br>REFER to: Turbocharger (303-04D Fuel Charging and Controls - Turbocharger - 2.7L V6 - TdV6, Diagnosis and Testing). |
| P0047 | Variable geometry turbocharger actuator 1 | • Turbocharger actuator circuit: high resistance<br>• Turbocharger actuator circuit: short circuit to ground<br>• Turbocharger actuator circuit: short circuit to power<br>• Turbocharger actuator failure<br>• ECM failure | For turbocharger and circuit tests,<br>REFER to: Turbocharger (303-04D Fuel Charging and Controls - Turbocharger - 2.7L V6 - TdV6, Diagnosis and Testing). |
| P0048 | Variable geometry turbocharger actuator 1 | • Turbocharger actuator circuit: high resistance<br>• Turbocharger actuator circuit: short circuit to ground<br>• Turbocharger actuator circuit: short circuit to power<br>• Turbocharger actuator failure<br>• ECM failure | For turbocharger and circuit tests,<br>REFER to: Turbocharger (303-04D Fuel Charging and Controls - Turbocharger - 2.7L V6 - TdV6, Diagnosis and Testing). |
| P004A | Variable geometry turbocharger actuator 2 | • Turbocharger actuator circuit: high resistance<br>• Turbocharger actuator circuit: short circuit to ground<br>• Turbocharger actuator circuit: short circuit to power<br>• Turbocharger actuator failure<br>• ECM failure | For turbocharger and circuit tests,<br>REFER to: Turbocharger (303-04D Fuel Charging and Controls - Turbocharger - 2.7L V6 - TdV6, Diagnosis and Testing). |
| P004B | Variable geometry turbocharger actuator 2 | • Turbocharger actuator circuit: high resistance<br>• Turbocharger actuator circuit: short circuit to ground<br>• Turbocharger actuator circuit: short circuit to power<br>• Turbocharger actuator failure<br>• ECM failure | For turbocharger and circuit tests,<br>REFER to: Turbocharger (303-04D Fuel Charging and Controls - Turbocharger - 2.7L V6 - TdV6, Diagnosis and Testing). |
| P004C | Variable geometry turbocharger actuator 2 | • Turbocharger actuator circuit: high resistance<br>• Turbocharger actuator circuit: short circuit to ground<br>• Turbocharger actuator circuit: short circuit to power<br>• Turbocharger actuator failure<br>• ECM failure | For turbocharger and circuit tests,<br>REFER to: Turbocharger (303-04D Fuel Charging and Controls - Turbocharger - 2.7L V6 - TdV6, Diagnosis and Testing). |
| P004D | Variable geometry turbocharger actuator 2 | • Turbocharger actuator circuit: high resistance<br>• Turbocharger actuator circuit: short circuit to ground<br>• Turbocharger actuator circuit: short circuit to power<br>• Turbocharger actuator failure<br>• ECM failure | For turbocharger and circuit tests,<br>REFER to: Turbocharger (303-04D Fuel Charging and Controls - Turbocharger - 2.7L V6 - TdV6, Diagnosis and Testing). |
| P0069 | Manifold absolute pressure (MAP) sensor | • MAP sensor circuit: high resistance<br>• MAP sensor circuit: short circuit to ground<br>• MAP sensor circuit: short circuit to power<br>• MAP sensor failure<br>• ECM failure | For MAP sensor tests, GO to Pinpoint Test L. |
| P0087 | Fuel rail/System pressure too low | • Lift pump inoperative<br>• Transfer pump efficiency low | For lift pump tests,<br>REFER to: Fuel Charging and Controls (303-04C Fuel Charging and Controls - 2.7L V6 - TdV6, Diagnosis and Testing). |
| P0088 | Fuel rail/System pressure too high | • Fuel pressure control valve fault | For FPCV tests,<br>REFER to: Fuel Charging and Controls (303-04C Fuel Charging and Controls - 2.7L V6 - TdV6, Diagnosis and Testing). |

GETtheMANUALS.org

| DTC | Condition | Possible source | Action |
|---|---|---|---|
| P0090 | Fuel pressure control valve (FPCV) | • FPCV circuit: high resistance<br>• FPCV circuit: short circuit to ground<br>• FPCV circuit: short circuit to power<br>• FPCV failure<br>• ECM failure | For FPCV tests,<br>REFER to: Fuel Charging and Controls (303-04C Fuel Charging and Controls - 2.7L V6 - TdV6, Diagnosis and Testing). |
| P0091 | Fuel pressure control valve (FPCV) | • FPCV circuit: high resistance<br>• FPCV circuit: short circuit to ground<br>• FPCV circuit: short circuit to power<br>• FPCV failure<br>• ECM failure | For FPCV tests,<br>REFER to: Fuel Charging and Controls (303-04C Fuel Charging and Controls - 2.7L V6 - TdV6, Diagnosis and Testing). |
| P0092 | Fuel pressure control valve (FPCV) | • FPCV circuit: high resistance<br>• FPCV circuit: short circuit to ground<br>• FPCV circuit: short circuit to power<br>• FPCV failure<br>• ECM failure | For FPCV tests,<br>REFER to: Fuel Charging and Controls (303-04C Fuel Charging and Controls - 2.7L V6 - TdV6, Diagnosis and Testing). |
| P0095 | Air charge temperature (ACT) sensor | • ACT sensor circuit: high resistance<br>• ACT sensor circuit: short circuit to ground<br>• ACT sensor circuit: short circuit to power<br>• ACT sensor failure<br>• ECM failure | For ACT sensor tests, GO to Pinpoint Test F. and GO to Pinpoint Test M. |
| P0097 | Air charge temperature (ACT) sensor | • ACT sensor circuit: high resistance<br>• ACT sensor circuit: short circuit to ground<br>• ACT sensor circuit: short circuit to power<br>• ACT sensor failure<br>• ECM failure | For ACT sensor tests, GO to Pinpoint Test F. and GO to Pinpoint Test M. |
| P0099 | Air charge temperature (ACT) sensor | • ACT sensor circuit: high resistance<br>• ACT sensor circuit: short circuit to ground<br>• ACT sensor circuit: short circuit to power<br>• ACT sensor failure<br>• ECM failure | For ACT sensor tests, GO to Pinpoint Test F. and GO to Pinpoint Test M. |
| P0100 | Mass air flow (MAF) sensor 1 | • MAF circuit: high resistance<br>• MAF circuit: short circuit to ground<br>• MAF circuit: short circuit to power<br>• MAF sensor failure<br>• ECM failure | For MAF 1 tests, GO to Pinpoint Test J. |
| P0104 | Mass air flow (MAF) sensor 1 | • MAF circuit: high resistance<br>• MAF circuit: short circuit to ground<br>• MAF circuit: short circuit to power<br>• MAF sensor failure<br>• ECM failure | For MAF 1 tests, GO to Pinpoint Test J. |
| P0105 | Manifold absolute pressure (MAP) sensor | • MAP sensor circuit: high resistance<br>• MAP sensor circuit: short circuit to ground<br>• MAP sensor circuit: short circuit to power<br>• MAP sensor failure<br>• ECM failure | For MAP sensor tests, GO to Pinpoint Test L. and GO to Pinpoint Test R. |
| P0106 | Manifold absolute pressure (MAP) sensor | • MAP sensor circuit: high resistance<br>• MAP sensor circuit: short circuit to ground<br>• MAP sensor circuit: short circuit to power<br>• MAP sensor failure<br>• ECM failure | For MAP sensor tests, GO to Pinpoint Test L. and GO to Pinpoint Test R. |
| P0107 | Manifold absolute pressure (MAP) sensor | • MAP sensor circuit: high resistance<br>• MAP sensor circuit: short circuit to ground<br>• MAP sensor circuit: short circuit to power<br>• MAP sensor failure | For MAP sensor tests, GO to Pinpoint Test L. and GO to Pinpoint Test R. |

SETHmMANUALS.org

| DTC | Condition | Possible source | Action |
|---|---|---|---|
| | | • ECM failure | |
| P0108 | Manifold absolute pressure (MAP) sensor | • MAP sensor circuit: high resistance<br>• MAP sensor circuit: short circuit to ground<br>• MAP sensor circuit: short circuit to power<br>• MAP sensor failure<br>• ECM failure | For MAP sensor tests, GO to Pinpoint Test L. and GO to Pinpoint Test R. |
| P0109 | Manifold absolute pressure (MAP) sensor | • MAP sensor circuit: high resistance<br>• MAP sensor circuit: short circuit to ground<br>• MAP sensor circuit: short circuit to power<br>• MAP sensor failure<br>• ECM failure | For MAP sensor tests, GO to Pinpoint Test L. and GO to Pinpoint Test R. |
| P010A | Mass air flow (MAF) sensor 2 | • MAF circuit: high resistance<br>• MAF circuit: short circuit to ground<br>• MAF circuit: short circuit to power<br>• MAF sensor failure<br>• ECM failure | For MAF 2 tests, GO to Pinpoint Test K. |
| P010E | Mass air flow (MAF) sensor 2 | • MAF circuit: high resistance<br>• MAF circuit: short circuit to ground<br>• MAF circuit: short circuit to power<br>• MAF sensor failure<br>• ECM failure | For MAF 2 tests, GO to Pinpoint Test K. |
| P0110 | Intake air temperature (IAT) sensor | • IAT sensor circuit: high resistance<br>• IAT sensor circuit: short circuit to ground<br>• IAT sensor circuit: short circuit to power<br>• IAT sensor sensor failure<br>• ECM failure | For IAT sensor tests, GO to Pinpoint Test I. and GO to Pinpoint Test M. |
| P0112 | Intake air temperature (IAT) sensor | • IAT sensor circuit: high resistance<br>• IAT sensor circuit: short circuit to ground<br>• IAT sensor circuit: short circuit to power<br>• IAT sensor sensor failure<br>• ECM failure | For IAT sensor tests, GO to Pinpoint Test I. and GO to Pinpoint Test M. |
| P0113 | Intake air temperature (IAT) sensor | • IAT sensor circuit: high resistance<br>• IAT sensor circuit: short circuit to ground<br>• IAT sensor circuit: short circuit to power<br>• IAT sensor sensor failure<br>• ECM failure | For IAT sensor tests, GO to Pinpoint Test I. and GO to Pinpoint Test M. |
| P0114 | Intake air temperature (IAT) sensor | • IAT sensor circuit: high resistance<br>• IAT sensor circuit: short circuit to ground<br>• IAT sensor circuit: short circuit to power<br>• IAT sensor sensor failure<br>• ECM failure | For IAT sensor tests, GO to Pinpoint Test I. and GO to Pinpoint Test M. |
| P0115 | Engine coolant temperature (ECT) sensor | • ECT sensor circuit: high resistance<br>• ECT sensor circuit: short circuit to ground<br>• ECT sensor circuit: short circuit to power<br>• ECT sensor failure<br>• ECM failure | For ECT sensor and circuit tests, GO to Pinpoint Test A. |
| P0116 | Engine coolant temperature (ECT) sensor | • ECT sensor circuit: high resistance<br>• ECT sensor circuit: short circuit to ground<br>• ECT sensor circuit: short circuit to power<br>• ECT sensor failure<br>• ECM failure | For ECT sensor and circuit tests, GO to Pinpoint Test A. |

GETtheMANUALS.org

| DTC | Condition | Possible source | Action |
|---|---|---|---|
| P0117 | Engine coolant temperature (ECT) sensor | • ECT sensor circuit: high resistance<br>• ECT sensor circuit: short circuit to ground<br>• ECT sensor circuit: short circuit to power<br>• ECT sensor failure<br>• ECM failure | For ECT sensor and circuit tests, GO to Pinpoint Test A. |
| P0118 | Engine coolant temperature (ECT) sensor | • ECT sensor circuit: high resistance<br>• ECT sensor circuit: short circuit to ground<br>• ECT sensor circuit: short circuit to power<br>• ECT sensor failure<br>• ECM failure | For ECT sensor and circuit tests, GO to Pinpoint Test A. |
| P0119 | Engine coolant temperature (ECT) sensor | • ECT sensor circuit: high resistance<br>• ECT sensor circuit: short circuit to ground<br>• ECT sensor circuit: short circuit to power<br>• ECT sensor failure<br>• ECM failure | For ECT sensor and circuit tests, GO to Pinpoint Test A. |
| P0180 | Fuel rail temperature (FRT) sensor | • FRT sensor circuit: high resistance<br>• FRT sensor circuit: short circuit to ground<br>• FRT sensor circuit: short circuit to power<br>• FRT sensor failure<br>• ECM failure | For FRT sensor tests, GO to Pinpoint Test B. |
| P0181 | Fuel rail temperature (FRT) sensor | • FRT sensor circuit: high resistance<br>• FRT sensor circuit: short circuit to ground<br>• FRT sensor circuit: short circuit to power<br>• FRT sensor failure<br>• ECM failure | For FRT sensor tests, GO to Pinpoint Test B. |
| P0182 | Fuel rail temperature (FRT) sensor | • FRT sensor circuit: high resistance<br>• FRT sensor circuit: short circuit to ground<br>• FRT sensor circuit: short circuit to power<br>• FRT sensor failure<br>• ECM failure | For FRT sensor tests, GO to Pinpoint Test B. |
| P0183 | Fuel rail temperature (FRT) sensor | • FRT sensor circuit: high resistance<br>• FRT sensor circuit: short circuit to ground<br>• FRT sensor circuit: short circuit to power<br>• FRT sensor failure<br>• ECM failure | For FRT sensor tests, GO to Pinpoint Test B. |
| P0184 | Fuel rail temperature (FRT) sensor | • FRT sensor circuit: high resistance<br>• FRT sensor circuit: short circuit to ground<br>• FRT sensor circuit: short circuit to power<br>• FRT sensor failure<br>• ECM failure | For FRT sensor tests, GO to Pinpoint Test B. |
| P0190 | Fuel rail pressure (FRP) sensor | • FRP sensor circuit: high resistance<br>• FRP sensor circuit: short circuit to ground<br>• FRP sensor circuit: short circuit to power<br>• FRP sensor failure<br>• ECM failure | For FRP sensor tests,<br>REFER to: Fuel Charging and Controls (303-04C Fuel Charging and Controls - 2.7L V6 - TdV6, Diagnosis and Testing). |
| P0191 | Fuel rail pressure (FRP) sensor | • FRP sensor circuit: high resistance<br>• FRP sensor circuit: short circuit to ground<br>• FRP sensor circuit: short circuit to power<br>• FRP sensor failure<br>• ECM failure | For FRP sensor tests,<br>REFER to: Fuel Charging and Controls (303-04C Fuel Charging and Controls - 2.7L V6 - TdV6, Diagnosis and Testing). |

GETtheMANUALS.org

| DTC | Condition | Possible source | Action |
|---|---|---|---|
| P0192 | Fuel rail pressure (FRP) sensor | • FRP sensor circuit: high resistance<br>• FRP sensor circuit: short circuit to ground<br>• FRP sensor circuit: short circuit to power<br>• FRP sensor failure<br>• ECM failure | For FRP sensor tests,<br>REFER to: Fuel Charging and Controls (303-04C Fuel Charging and Controls - 2.7L V6 - TdV6, Diagnosis and Testing). |
| P0193 | Fuel rail pressure (FRP) sensor | • FRP sensor circuit: high resistance<br>• FRP sensor circuit: short circuit to ground<br>• FRP sensor circuit: short circuit to power<br>• FRP sensor failure<br>• ECM failure | For FRP sensor tests,<br>REFER to: Fuel Charging and Controls (303-04C Fuel Charging and Controls - 2.7L V6 - TdV6, Diagnosis and Testing). |
| P0194 | Fuel rail pressure (FRP) sensor | • FRP sensor circuit: high resistance<br>• FRP sensor circuit: short circuit to ground<br>• FRP sensor circuit: short circuit to power<br>• FRP sensor failure<br>• ECM failure | For FRP sensor tests,<br>REFER to: Fuel Charging and Controls (303-04C Fuel Charging and Controls - 2.7L V6 - TdV6, Diagnosis and Testing). |
| P0195 | Engine oil temperature, level and quality (EOT) sensor | • EOT sensor circuit: high resistance<br>• EOT sensor circuit: short circuit to ground<br>• EOT sensor circuit: short circuit to power<br>• EOT sensor failure<br>• ECM failure | For EOT sensor tests, GO to Pinpoint Test C. |
| P0196 | Engine oil temperature, level and quality (EOT) sensor | • EOT sensor circuit: high resistance<br>• EOT sensor circuit: short circuit to ground<br>• EOT sensor circuit: short circuit to power<br>• EOT sensor failure<br>• ECM failure | For EOT sensor tests, GO to Pinpoint Test C. |
| P0197 | Engine oil temperature, level and quality (EOT) sensor | • EOT sensor circuit: high resistance<br>• EOT sensor circuit: short circuit to ground<br>• EOT sensor circuit: short circuit to power<br>• EOT sensor failure<br>• ECM failure | For EOT sensor tests, GO to Pinpoint Test C. |
| P0198 | Engine oil temperature, level and quality (EOT) sensor | • EOT sensor circuit: high resistance<br>• EOT sensor circuit: short circuit to ground<br>• EOT sensor circuit: short circuit to power<br>• EOT sensor failure<br>• ECM failure | For EOT sensor tests, GO to Pinpoint Test C. |
| P0199 | Engine oil temperature, level and quality (EOT) sensor | • EOT sensor circuit: high resistance<br>• EOT sensor circuit: short circuit to ground<br>• EOT sensor circuit: short circuit to power<br>• EOT sensor failure<br>• ECM failure | For EOT sensor tests, GO to Pinpoint Test C. |
| P0201 | Fuel injector, cylinder 1 | • Fuel injector circuit: high resistance<br>• Fuel injector circuit: short circuit to ground<br>• Fuel injector circuit: short circuit to power<br>• Fuel injector failure<br>• ECM failure | For fuel injector tests,<br>REFER to: Fuel Charging and Controls (303-04C Fuel Charging and Controls - 2.7L V6 - TdV6, Diagnosis and Testing). |
| P0202 | Fuel injector, cylinder 2 | • Fuel injector circuit: high resistance<br>• Fuel injector circuit: short circuit to ground<br>• Fuel injector circuit: short circuit to power<br>• Fuel injector failure<br>• ECM failure | For fuel injector tests,<br>REFER to: Fuel Charging and Controls (303-04C Fuel Charging and Controls - 2.7L V6 - TdV6, Diagnosis and Testing). |

GETtheMANUALS.org

| DTC | Condition | Possible source | Action |
|---|---|---|---|
| P0203 | Fuel injector, cylinder 3 | • Fuel injector circuit: high resistance<br>• Fuel injector circuit: short circuit to ground<br>• Fuel injector circuit: short circuit to power<br>• Fuel injector failure<br>• ECM failure | For fuel injector tests,<br>REFER to: Fuel Charging and Controls (303-04C Fuel Charging and Controls - 2.7L V6 - TdV6, Diagnosis and Testing). |
| P0204 | Fuel injector, cylinder 4 | • Fuel injector circuit: high resistance<br>• Fuel injector circuit: short circuit to ground<br>• Fuel injector circuit: short circuit to power<br>• Fuel injector failure<br>• ECM failure | For fuel injector tests,<br>REFER to: Fuel Charging and Controls (303-04C Fuel Charging and Controls - 2.7L V6 - TdV6, Diagnosis and Testing). |
| P0205 | Fuel injector, cylinder 5 | • Fuel injector circuit: high resistance<br>• Fuel injector circuit: short circuit to ground<br>• Fuel injector circuit: short circuit to power<br>• Fuel injector failure<br>• ECM failure | For fuel injector tests,<br>REFER to: Fuel Charging and Controls (303-04C Fuel Charging and Controls - 2.7L V6 - TdV6, Diagnosis and Testing). |
| P0206 | Fuel injector, cylinder 6 | • Fuel injector circuit: high resistance<br>• Fuel injector circuit: short circuit to ground<br>• Fuel injector circuit: short circuit to power<br>• Fuel injector failure<br>• ECM failure | For fuel injector tests,<br>REFER to: Fuel Charging and Controls (303-04C Fuel Charging and Controls - 2.7L V6 - TdV6, Diagnosis and Testing). |
| P020A | Fuel injector, cylinder 1 | • Fuel injector circuit: high resistance<br>• Fuel injector circuit: short circuit to ground<br>• Fuel injector circuit: short circuit to power<br>• Fuel injector failure<br>• ECM failure | For fuel injector tests,<br>REFER to: Fuel Charging and Controls (303-04C Fuel Charging and Controls - 2.7L V6 - TdV6, Diagnosis and Testing). |
| P020B | Fuel injector, cylinder 2 | • Fuel injector circuit: high resistance<br>• Fuel injector circuit: short circuit to ground<br>• Fuel injector circuit: short circuit to power<br>• Fuel injector failure<br>• ECM failure | For fuel injector tests,<br>REFER to: Fuel Charging and Controls (303-04C Fuel Charging and Controls - 2.7L V6 - TdV6, Diagnosis and Testing). |
| P020C | Fuel injector, cylinder 3 | • Fuel injector circuit: high resistance<br>• Fuel injector circuit: short circuit to ground<br>• Fuel injector circuit: short circuit to power<br>• Fuel injector failure<br>• ECM failure | For fuel injector tests,<br>REFER to: Fuel Charging and Controls (303-04C Fuel Charging and Controls - 2.7L V6 - TdV6, Diagnosis and Testing). |
| P020D | Fuel injector, cylinder 4 | • Fuel injector circuit: high resistance<br>• Fuel injector circuit: short circuit to ground<br>• Fuel injector circuit: short circuit to power<br>• Fuel injector failure<br>• ECM failure | For fuel injector tests,<br>REFER to: Fuel Charging and Controls (303-04C Fuel Charging and Controls - 2.7L V6 - TdV6, Diagnosis and Testing). |
| P020E | Fuel injector, cylinder 5 | • Fuel injector circuit: high resistance<br>• Fuel injector circuit: short circuit to ground<br>• Fuel injector circuit: short circuit to power<br>• Fuel injector failure<br>• ECM failure | For fuel injector tests,<br>REFER to: Fuel Charging and Controls (303-04C Fuel Charging and Controls - 2.7L V6 - TdV6, Diagnosis and Testing). |
| P020F | Fuel injector, cylinder 6 | • Fuel injector circuit: high resistance<br>• Fuel injector circuit: short circuit to ground<br>• Fuel injector circuit: short circuit to power<br>• Fuel injector failure<br>• ECM failure | For fuel injector tests,<br>REFER to: Fuel Charging and Controls (303-04C Fuel Charging and Controls - 2.7L V6 - TdV6, Diagnosis and Testing). |

GETtheMANUALS.org

| DTC | Condition | Possible source | Action |
|---|---|---|---|
| P0219 | Crankshaft/Camshaft position (CKP/CMP) sensor | • CKP sensor circuit: high resistance<br>• CKP sensor circuit: short circuit to ground<br>• CKP sensor circuit: short circuit to power<br>• CMP sensor circuit: high resistance<br>• CMP sensor circuit: short circuit to ground<br>• CMP sensor circuit: short circuit to power<br>• CKP sensor failure<br>• CMP sensor failure<br>• ECM failure | For CKP sensor tests, GO to Pinpoint Test N., for CMP sensor tests, GO to Pinpoint Test O. For both sensors, GO to Pinpoint Test P. |
| P0263 | Fuel injector, cylinder 1 | • Fuel injector circuit: high resistance<br>• Fuel injector circuit: short circuit to ground<br>• Fuel injector circuit: short circuit to power<br>• Fuel injector failure<br>• ECM failure | For fuel injector tests,<br>REFER to: Fuel Charging and Controls (303-04C Fuel Charging and Controls - 2.7L V6 - TdV6, Diagnosis and Testing). |
| P0266 | Fuel injector, cylinder 2 | • Fuel injector circuit: high resistance<br>• Fuel injector circuit: short circuit to ground<br>• Fuel injector circuit: short circuit to power<br>• Fuel injector failure<br>• ECM failure | For fuel injector tests,<br>REFER to: Fuel Charging and Controls (303-04C Fuel Charging and Controls - 2.7L V6 - TdV6, Diagnosis and Testing). |
| P0269 | Fuel injector, cylinder 3 | • Fuel injector circuit: high resistance<br>• Fuel injector circuit: short circuit to ground<br>• Fuel injector circuit: short circuit to power<br>• Fuel injector failure<br>• ECM failure | For fuel injector tests,<br>REFER to: Fuel Charging and Controls (303-04C Fuel Charging and Controls - 2.7L V6 - TdV6, Diagnosis and Testing). |
| P0272 | Fuel injector, cylinder 4 | • Fuel injector circuit: high resistance<br>• Fuel injector circuit: short circuit to ground<br>• Fuel injector circuit: short circuit to power<br>• Fuel injector failure<br>• ECM failure | For fuel injector tests,<br>REFER to: Fuel Charging and Controls (303-04C Fuel Charging and Controls - 2.7L V6 - TdV6, Diagnosis and Testing). |
| P0275 | Fuel injector, cylinder 5 | • Fuel injector circuit: high resistance<br>• Fuel injector circuit: short circuit to ground<br>• Fuel injector circuit: short circuit to power<br>• Fuel injector failure<br>• ECM failure | For fuel injector tests,<br>REFER to: Fuel Charging and Controls (303-04C Fuel Charging and Controls - 2.7L V6 - TdV6, Diagnosis and Testing). |
| P0278 | Fuel injector, cylinder 6 | • Fuel injector circuit: high resistance<br>• Fuel injector circuit: short circuit to ground<br>• Fuel injector circuit: short circuit to power<br>• Fuel injector failure<br>• ECM failure | For fuel injector tests,<br>REFER to: Fuel Charging and Controls (303-04C Fuel Charging and Controls - 2.7L V6 - TdV6, Diagnosis and Testing). |
| P0326 | Knock sensor 1 (KS) | • KS circuit: high resistance<br>• KS circuit: short circuit to ground<br>• KS circuit: short circuit to power<br>• KS failure<br>• ECM failure | For KS tests, GO to Pinpoint Test G. |
| P0331 | Knock sensor 2 (KS) | • KS circuit: high resistance<br>• KS circuit: short circuit to ground<br>• KS circuit: short circuit to power<br>• KS failure<br>• ECM failure | For KS tests, GO to Pinpoint Test H. |
| P0335 | Crankshaft position (CKP) sensor | • CKP sensor circuit: high resistance<br>• CKP sensor circuit: short circuit to ground<br>• CKP sensor circuit: short circuit to power | For CKP sensor tests, GO to Pinpoint Test N. |

GETtheMANUALS.org

| DTC | Condition | Possible source | Action |
|---|---|---|---|
| | | • CKP sensor failure<br>• ECM failure | |
| P0336 | Crankshaft position (CKP) sensor | • CKP sensor circuit: high resistance<br>• CKP sensor circuit: short circuit to ground<br>• CKP sensor circuit: short circuit to power<br>• CKP sensor failure<br>• ECM failure | For CKP sensor tests, GO to Pinpoint Test N. |
| P0337 | Crankshaft position (CKP) sensor | • CKP sensor circuit: high resistance<br>• CKP sensor circuit: short circuit to ground<br>• CKP sensor circuit: short circuit to power<br>• CKP sensor failure<br>• ECM failure | For CKP sensor tests, GO to Pinpoint Test N. |
| P0339 | Crankshaft position (CKP) sensor | • CKP sensor circuit: high resistance<br>• CKP sensor circuit: short circuit to ground<br>• CKP sensor circuit: short circuit to power<br>• CKP sensor failure<br>• ECM failure | For CKP sensor tests, GO to Pinpoint Test N. |
| P0340 | Camshaft position (CMP) sensor | • CMP sensor circuit: high resistance<br>• CMP sensor circuit: short circuit to ground<br>• CMP sensor circuit: short circuit to power<br>• CMP sensor failure<br>• ECM failure | For CMP sensor tests, GO to Pinpoint Test O. |
| P0341 | Camshaft position (CMP) sensor | • CMP sensor circuit: high resistance<br>• CMP sensor circuit: short circuit to ground<br>• CMP sensor circuit: short circuit to power<br>• CMP sensor failure<br>• ECM failure | For CMP sensor tests, GO to Pinpoint Test O. |
| P0342 | Camshaft position (CMP) sensor | • CMP sensor circuit: high resistance<br>• CMP sensor circuit: short circuit to ground<br>• CMP sensor circuit: short circuit to power<br>• CMP sensor failure<br>• ECM failure | For CMP sensor tests, GO to Pinpoint Test O. |
| P120E | Fuel rail pressure (FRP) sensor | • FRP sensor circuit: high resistance<br>• FRP sensor circuit: short circuit to ground<br>• FRP sensor circuit: short circuit to power<br>• FRP sensor failure<br>• ECM failure | For FRP sensor tests,<br>REFER to: Fuel Charging and Controls (303-04C Fuel Charging and Controls - 2.7L V6 - TdV6, Diagnosis and Testing). |
| P1336 | Crankshaft/Camshaft position (CKP/CMP) sensor | • CKP sensor circuit: high resistance<br>• CKP sensor circuit: short circuit to ground<br>• CKP sensor circuit: short circuit to power<br>• CMP sensor circuit: high resistance<br>• CMP sensor circuit: short circuit to ground<br>• CMP sensor circuit: short circuit to power<br>• CKP sensor failure<br>• CMP sensor failure<br>• ECM failure | For CKP sensor tests, GO to Pinpoint Test N., for CMP sensor tests, GO to Pinpoint Test O. For both sensors, GO to Pinpoint Test P. |
| P1551 | Fuel injector, cylinder 1 | • Fuel injector circuit: high resistance<br>• Fuel injector circuit: short circuit to ground<br>• Fuel injector circuit: short circuit to power<br>• Fuel injector failure<br>• ECM failure | For fuel injector tests,<br>REFER to: Fuel Charging and Controls (303-04C Fuel Charging and Controls - 2.7L V6 - TdV6, Diagnosis and Testing). |

GETtheMANUALS.org

| DTC | Condition | Possible source | Action |
|---|---|---|---|
| P1552 | Fuel injector, cylinder 2 | • Fuel injector circuit: high resistance<br>• Fuel injector circuit: short circuit to ground<br>• Fuel injector circuit: short circuit to power<br>• Fuel injector failure<br>• ECM failure | For fuel injector tests,<br>REFER to: Fuel Charging and Controls (303-04C Fuel Charging and Controls - 2.7L V6 - TdV6, Diagnosis and Testing). |
| P1553 | Fuel injector, cylinder 3 | • Fuel injector circuit: high resistance<br>• Fuel injector circuit: short circuit to ground<br>• Fuel injector circuit: short circuit to power<br>• Fuel injector failure<br>• ECM failure | For fuel injector tests,<br>REFER to: Fuel Charging and Controls (303-04C Fuel Charging and Controls - 2.7L V6 - TdV6, Diagnosis and Testing). |
| P1554 | Fuel injector, cylinder 4 | • Fuel injector circuit: high resistance<br>• Fuel injector circuit: short circuit to ground<br>• Fuel injector circuit: short circuit to power<br>• Fuel injector failure<br>• ECM failure | For fuel injector tests,<br>REFER to: Fuel Charging and Controls (303-04C Fuel Charging and Controls - 2.7L V6 - TdV6, Diagnosis and Testing). |
| P1555 | Fuel injector, cylinder 5 | • Fuel injector circuit: high resistance<br>• Fuel injector circuit: short circuit to ground<br>• Fuel injector circuit: short circuit to power<br>• Fuel injector failure<br>• ECM failure | For fuel injector tests,<br>REFER to: Fuel Charging and Controls (303-04C Fuel Charging and Controls - 2.7L V6 - TdV6, Diagnosis and Testing). |
| P1556 | Fuel injector, cylinder 6 | • Fuel injector circuit: high resistance<br>• Fuel injector circuit: short circuit to ground<br>• Fuel injector circuit: short circuit to power<br>• Fuel injector failure<br>• ECM failure | For fuel injector tests,<br>REFER to: Fuel Charging and Controls (303-04C Fuel Charging and Controls - 2.7L V6 - TdV6, Diagnosis and Testing). |
| P2122 | Accelerator pedal position (APP) sensor 1 | • APP sensor circuit: high resistance<br>• APP sensor circuit: short circuit to ground<br>• APP sensor circuit: short circuit to power<br>• APP sensor failure<br>• ECM failure | For APP 1 tests, GO to Pinpoint Test D. |
| P2123 | Accelerator pedal position (APP) sensor 1 | • APP sensor circuit: high resistance<br>• APP sensor circuit: short circuit to ground<br>• APP sensor circuit: short circuit to power<br>• APP sensor failure<br>• ECM failure | For APP 1 tests, GO to Pinpoint Test D. |
| P2127 | Accelerator pedal position (APP) sensor 2 | • APP sensor circuit: high resistance<br>• APP sensor circuit: short circuit to ground<br>• APP sensor circuit: short circuit to power<br>• APP sensor failure<br>• ECM failure | For APP 2 tests, GO to Pinpoint Test E. |
| P2128 | Accelerator pedal position (APP) sensor 2 | • APP sensor circuit: high resistance<br>• APP sensor circuit: short circuit to ground<br>• APP sensor circuit: short circuit to power<br>• APP sensor failure<br>• ECM failure | For APP 2 tests, GO to Pinpoint Test E. |
| P2138 | Accelerator pedal position (APP) sensor | • APP1 circuit: high resistance<br>• APP1 circuit: short circuit to ground<br>• APP1 circuit: short circuit to power<br>• APP2 circuit: high resistance<br>• APP2 circuit: short circuit to ground<br>• APP2 circuit: short circuit to power<br>• APP1 failure | For APP 1 tests, GO to Pinpoint Test D. For APP 2 tests, GO to Pinpoint Test E. For both sensors, GO to Pinpoint Test Q. |

GETtheMANUALS.org

| DTC | Condition | Possible source | Action |
|---|---|---|---|
| | | • APP2 failure<br>• ECM failure | |
| P2141 | Exhaust gas recirculation throttle actuator (ETA) | • ETA circuit: high resistance<br>• ETA circuit: short circuit to ground<br>• ETA circuit: short circuit to power<br>• ETA failure<br>• ECM failure | For EGR tests,<br>REFER to: Engine Emission Control (303-08B Engine Emission Control - 2.7L V6 - TdV6, Diagnosis and Testing). |
| P2142 | Exhaust gas recirculation throttle actuator (ETA) | • ETA circuit: high resistance<br>• ETA circuit: short circuit to ground<br>• ETA circuit: short circuit to power<br>• ETA failure<br>• ECM failure | For EGR tests,<br>REFER to: Engine Emission Control (303-08B Engine Emission Control - 2.7L V6 - TdV6, Diagnosis and Testing). |
| P250C | Engine oil temperature, level and quality (EOT) sensor | • EOT sensor circuit: high resistance<br>• EOT sensor circuit: short circuit to ground<br>• EOT sensor circuit: short circuit to power<br>• EOT sensor failure<br>• ECM failure | For EOT sensor tests, GO to Pinpoint Test C. |
| P250D | Engine oil temperature, level and quality (EOT) sensor | • EOT sensor circuit: high resistance<br>• EOT sensor circuit: short circuit to ground<br>• EOT sensor circuit: short circuit to power<br>• EOT sensor failure<br>• ECM failure | For EOT sensor tests, GO to Pinpoint Test C. |
| P250E | Engine oil temperature, level and quality (EOT) sensor | • EOT sensor circuit: high resistance<br>• EOT sensor circuit: short circuit to ground<br>• EOT sensor circuit: short circuit to power<br>• EOT sensor failure<br>• ECM failure | For EOT sensor tests, GO to Pinpoint Test C. |
| P252C | Engine oil temperature, level and quality (EOT) sensor | • EOT sensor circuit: high resistance<br>• EOT sensor circuit: short circuit to ground<br>• EOT sensor circuit: short circuit to power<br>• EOT sensor failure<br>• ECM failure | For EOT sensor tests, GO to Pinpoint Test C. |
| P252D | Engine oil temperature, level and quality (EOT) sensor | • EOT sensor circuit: high resistance<br>• EOT sensor circuit: short circuit to ground<br>• EOT sensor circuit: short circuit to power<br>• EOT sensor failure<br>• ECM failure | For EOT sensor tests, GO to Pinpoint Test C. |
| P252E | Engine oil temperature, level and quality (EOT) sensor | • EOT sensor circuit: high resistance<br>• EOT sensor circuit: short circuit to ground<br>• EOT sensor circuit: short circuit to power<br>• EOT sensor failure<br>• ECM failure | For EOT sensor tests, GO to Pinpoint Test C. |

## Inspection and Verification

**This pinpoint test is intended to diagnose the following:**

- Short circuit to GROUND in the engine coolant temperature (ECT) sensor circuit
- Short circuit to POWER in the engine coolant temperature (ECT) sensor circuit
- Open circuit in the engine coolant temperature (ECT) sensor circuit
- Engine coolant temperature (ECT) sensor
- ECM

Engine coolant temperature sensor (ECT) sensor connector

GETtheMANUALS.org

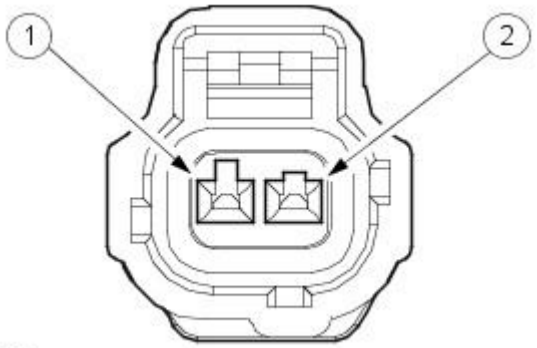


E54259

| | |
|---|---|
| Engine coolant temperature sensor - signal | 01 |
| Engine coolant temperature sensor - return | 02 |

Engine control module (ECM) connector

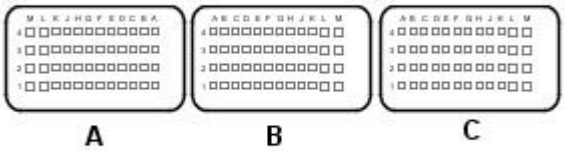


E54251

| | |
|---|---|
| Engine coolant temperature sensor - signal | C-C2 |
| Engine coolant temperature sensor - return | C-E2 |

**ECT sensor characteristics**

| Resistance (ohms) | Temperature (degrees C) | Temperature (degrees F) | Volts |
|---|---|---|---|
| 925021 | -40 | -40 | 4.8942 |
| 496051 | -30 | -22 | 4.8062 |
| 276959 | -20 | -04 | 4.6633 |
| 160313 | -10 | 14 | 4.4454 |
| 123485 | -5 | 23 | 4.3031 |
| 95851 | 0 | 32 | 4.1368 |
| 74914 | 5 | 41 | 3.9464 |
| 58987 | 10 | 50 | 3.7340 |
| 37340 | 20 | 68 | 3.2560 |
| 24253 | 30 | 86 | 2.7403 |
| 16113 | 40 | 104 | 2.2309 |
| 10926 | 50 | 122 | 1.7665 |
| 7548 | 60 | 140 | 1.3700 |
| 5335 | 70 | 158 | 1.0529 |
| 3837 | 80 | 176 | 0.8048 |
| 2804 | 90 | 194 | 0.6148 |
| 2080 | 100 | 212 | 0.4710 |
| 1564 | 110 | 230 | 0.3636 |
| 1191 | 120 | 248 | 0.2810 |
| 918 | 130 | 266 | 0.2194 |

## Pinpoint Tests

| PINPOINT TEST A : ENGINE COOLANT TEMPERATURE (ECT) SENSOR | |
|---|---|
| **TEST CONDITIONS** | **DETAILS/RESULTS/ACTIONS** |
| **A1: CHECK THE ECT PID VALUE** | |
| | 1 Please ensure the engine is cold. |
| | 2 Key on, engine off. |
| | 3 Access the OBDII-engine coolant temperature PID using a scan tool. |
| | Is the ECT reading as expected for the current environmental and engine conditions?<br>**Yes**<br>GO to A2.<br>**No**<br>GO to A5. |
| **A2: CHECK THE ECT PID VALUE DURING WARM UP** | |
| | 1 Key on, engine run. |
| | 2 Access the OBDII-engine coolant temperature PID using a scan tool. |
| | 3 Increase the engine speed to 2,000 rpm and monitor the ECT reading until the engine is at full operating temperature. |
| | Did the ECT reading rise smoothly to a value of between 80 and 95 degrees C (176 and 203 degreees F)?<br>**Yes**<br>No fault found.<br>**No**<br>GO to A4. |
| **A3: CHECK FOR AN INTERMITTENT FAULT CONDITIONS** | |

GETtheMANUALS.org

| | |
|---|---|
| | 1 |
| | Were there any sudden or unexpected changes in the PID readings?<br>**Yes**<br>KEY OFF.GO to A4.<br>**No**<br>GO to A5. |
| **A4: CHECK THE ECT PID VALUE** | |
| | 1 Key on, engine off. |
| | 2 Access the OBDII-engine coolant temperature PID using a scan tool. |
| | 3 Check the ECT harness wiring and connectors for loose connections and water ingress. Monitoring the temperature readings for sudden changes while handling the harness and connectors, may help in isolation of these types of fault. |
| | Did you identify any loose connections or water ingress in the ECT harness wiring and connectors?<br>**Yes**<br>REPAIR the fault as necessary.<br>**No**<br>GO to A5. |
| **A5: CHECK THE ECT SENSOR RETURN LINE CONTINUITY** | |
| | 1 Key off. |
| | 2 ECT sensor connector disconnected. |
| | 3 Key on, engine off. |
| | 4 Measure the resistance between: |
| | Engine coolant temperature sensor - return - Pin 02 \| Negative post |
| | Is the resistance less than 10 ohms?<br>**Yes**<br>GO to A8.<br>**No**<br>GO to A6. |
| **A6: CHECK THE ECT SENSOR RETURN LINE FOR SHORT CIRCUIT TO POWER** | |
| | 1 Measure the resistance between: |
| | Engine coolant temperature sensor - return - Pin 02 \| Positive post |
| | Is the resistance geater than 100 Kohms?<br>**Yes**<br>GO to A7.<br>**No**<br>GO to A14. |
| **A7: CHECK THE ECT SENSOR RETURN LINE FOR OPEN CIRCUIT** | |
| | 1 Key off. |
| | 2 ECM connector disconnected. |
| | 3 Measure the resistance between: |
| | Engine coolant temperature sensor - return - Pin 02 \| Engine coolant temperature sensor - return - Pin C-E2 |
| | Is the resistance less than 10 ohms?<br>**Yes**<br>Suspect:- ECM connector- ECM<br>**No**<br>REPAIR the open circuit. For additional information, refer to the wiring diagrams. |
| **A8: CHECK THE ECT SIGNAL LINE FOR SHORT CIRCUIT TO GROUND** | |
| | 1 Measure the resistance between: |
| | Engine coolant temperature sensor - signal - Pin 01 \| Negative post |
| | Is the resistance greater than 100 Kohms?<br>**Yes**<br>GO to A9.<br>**No**<br>GO to A12. |
| **A9: CHECK THE ECT SIGNAL LINE FOR SHORT CIRCUIT TO POWER** | |
| | 1 Measure the resistance between: |
| | Engine coolant temperature sensor - signal - Pin 01 \| Positive post |
| | Is the resistance greater than 100 Kohms?<br>**Yes**<br>GO to A10.<br>**No**<br>GO to A15. |
| **A10: CHECK THE ECT SIGNAL LINE FOR OPEN CIRCUIT** | |
| | 1 Key off. |
| | 2 ECM connector disconnected. |
| | 3 Measure the resistance between: |
| | Engine coolant temperature sensor - signal - Pin 01 \| Engine coolant temperature sensor - signal - Pin C-C2 |
| | Is the resistance less than 10 ohms?<br>**Yes**<br>GO to A11.<br>**No**<br>REPAIR the open circuit. For additional information, refer to the wiring diagrams. |
| **A11: CHECK THE COMPONENT RESISTANCE** | |
| | 1 Measure the resistance between: |
| | Engine coolant temperature sensor - signal - Pin 01 \| Engine coolant temperature sensor - return - Pin 02 |
| | Is the resistance between 1 Kohms - 500 Kohms?<br>**Yes**<br>An intermittent fault may be present in the wiring harness. Visually check for chaffed wires or other physical damage to the harness. If no fault is found in the circuit, suspect the following component(s):- ECT connector- ECT sensor- ECM connector- ECM<br>**No**<br>INSTALL a new ECT sensor. |
| **A12: CHECK THE ECT CIRCUIT(S) FOR SIGNAL AND RETURN LINES SHORTED TOGETHER** | |
| | 1 Key off. |
| | 2 ECM connector disconnected. |
| | 3 Key on, engine off. |

GETtheMANUALS.org

| | |
|---|---|
| | 4 Measure the resistance between: |
| | Engine coolant temperature sensor - signal - Pin 01 / Engine coolant temperature sensor - return - Pin 02 |
| | Is the resistance greater than 100 Kohms?<br>**Yes**<br>GO to A13.<br>**No**<br>REPAIR the short circuit. For additional information, refer to the wiring diagrams. |
| **A13: CHECK WHETHER THE SHORT CIRCUIT TO GROUND IS IN THE ECT HARNESS OR ECU** | |
| | 1 Measure the resistance between: |
| | Engine coolant temperature sensor - signal - Pin 01 / Negative post |
| | Is the resistance greater than 100 Kohms?<br>**Yes**<br>Suspect:- ECM<br>**No**<br>REPAIR the short circuit. For additional information, refer to the wiring diagrams. |
| **A14: CHECK WHETHER THE SHORT CIRCUIT TO POWER IS IN THE ECT HARNESS OR ECU** | |
| | 1 Key off. |
| | 2 ECM connector disconnected. |
| | 3 Key on, engine off. |
| | 4 Measure the resistance between: |
| | Engine coolant temperature sensor - return - Pin 02 / Positive post |
| | Is the resistance greater than 100 Kohms?<br>**Yes**<br>Suspect:- ECM<br>**No**<br>REPAIR the short circuit. For additional information, refer to the wiring diagrams. |
| **A15: CHECK WHETHER THE SHORT CIRCUIT TO POWER IS IN THE ECT HARNESS OR ECU** | |
| | 1 Key off. |
| | 2 ECM connector disconnected. |
| | 3 Key on, engine off. |
| | 4 Measure the resistance between: |
| | Engine coolant temperature sensor - signal - Pin 01 / Positive post |
| | Is the resistance greater than 100 Kohms?<br>**Yes**<br>Suspect:- ECM<br>**No**<br>REPAIR the short circuit. For additional information, refer to the wiring diagrams. |

## Inspection and Verification

Note

**This pinpoint test is intended to diagnose the following:**

- Short circuit to GROUND in the fuel rail temperature (FRT) sensor circuit
- Short circuit to POWER in the fuel rail temperature (FRT) sensor circuit
- Open circuit in the fuel rail temperature (FRT) sensor circuit
- Fuel rail temperature (FRT) sensor
- ECM

Fuel rail temperature. (FRT) Sensor Connector

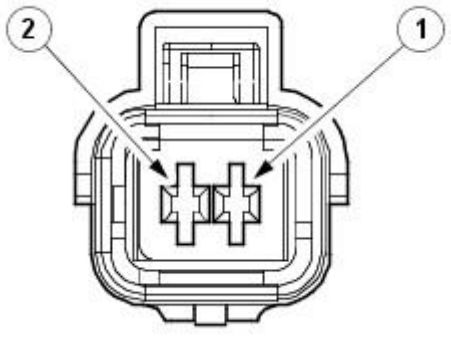


E54260

| | |
|---|---|
| Fuel rail temperature sensor - signal | 01 |
| Fuel rail temperature sensor - return | 02 |

Engine control module (ECM) connector

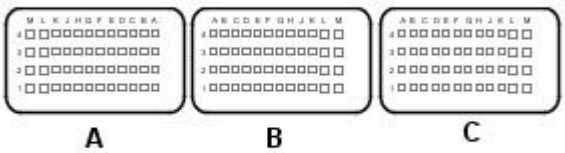


GETtheMANUALS.org

E54251

| | |
|---|---|
| Fuel rail temperature sensor - signal | C-B2 |
| Fuel rail temperature sensor - return | C-G3 |

**Fuel rail temperature sensor characteristics**

| Temperature (degrees C) | Temperature (degrees F) | Volts |
|---|---|---|
| -40 | -40 | 4.9701 |
| -30 | -22 | 4.9436 |
| -20 | -04 | 4.8983 |
| 0 | 32 | 4.7104 |
| 20 | 68 | 4.3092 |
| 40 | 104 | 3.6210 |
| 60 | 140 | 2.7528 |
| 80 | 176 | 1.8951 |
| 100 | 212 | 1.2389 |
| 120 | 248 | 0.7947 |
| 130 | 266 | 0.6362 |
| 150 | 302 | 0.4115 |

## Pinpoint Tests

| PINPOINT TEST B : FUEL RAIL TEMPERATURE (FRT) SENSOR | |
|---|---|
| **TEST CONDITIONS** | **DETAILS/RESULTS/ACTIONS** |
| **B1: CHECK THE FRT PID VALUE** | |
| | 1 Please ensure the engine is cold. |
| | 2 Key on, engine off. |
| | 3 Access the ECM-fuel rail temperature PID using a scan tool.<br>● There are two PIDs accessible for the fuel rail temperature sensor, the actual reading PID, and another for limp-home. The limp-home PID is a default value, so is fixed. Make sure the actual reading PID is used. |
| | Is the PID reading as expected for the current environmental and engine conditions?<br>**Yes**<br>GO to B2.<br>**No**<br>GO to B5. |
| **B2: CHECK THE FRT PID VALUE DURING WARM UP** | |
| | 1 Key on, engine run. |
| | 2 Access the ECM-fuel rail temperature and OBDII-engine coolant temperature PIDs using a scan tool.<br>● There are two PIDs accessible for the fuel rail temperature sensor, the actual reading PID, and another for limp-home. The limp-home PID is a default value, so is fixed. Make sure the actual reading PID is used. |
| | 3 Increase the engine speed to 2,000 rpm and monitor the FRT reading, until the engine is at full operating temperature. |
| | Did the FRT reading rise smoothly and by more than 10 degrees C (50 degrees F)?<br>**Yes**<br>No fault found.<br>**No**<br>GO to B3. |
| **B3: CHECK THE FRT PID VALUE** | |
| | 1<br>● There are two PIDs accessible for the fuel rail temperature sensor, the actual reading PID, and another for limp-home. The limp-home PID is a default value, so is fixed. Make sure the actual reading PID is used. |
| | Were there any sudden or unexpected changes in the FRT readings?<br>**Yes**<br>KEY OFF.GO to B4.<br>**No**<br>GO to B5. |
| **B4: CHECK FOR AN INTERMITTENT FAULT CONDITION** | |
| | 1 Key on, engine off. |
| | 2 Access the ECM-fuel rail temperature PID using a scan tool. |
| | 3 Check the FRT harness wiring and connectors for loose connections and water ingress. Monitoring the temperature readings for sudden changes while handling the harness and connectors, may help in isolation of these types of fault. |
| | Did you identify any loose connections or water ingress in the FRT harness wiring or connectors?<br>**Yes**<br>REPAIR the fault as necessary.<br>**No**<br>GO to B5. |
| **B5: CHECK THE FRT SENSOR RETURN LINE** | |
| | 1 Key off. |
| | 2 FRT Sensor connector disconnected. |
| | 3 Key on, engine off. |
| | 4 Measure the resistance between: |
| | Fuel rail temperature sensor - return - Pin 02 — Negative post |
| | Is the resistance less than 10 ohms?<br>**Yes**<br>GO to B8.<br>**No**<br>GO to B6. |
| **B6: CHECK THE FRT SENSOR RETURN LINE FOR SHORT CIRCUIT TO POWER** | |
| | 1 Measure the resistance between: |
| | Fuel rail temperature sensor - return - Pin 02 — Positive post |

GETtheMANUALS.org

Is the resistance greater than 100 Kohms?
**Yes**
GO to B7.
**No**
GO to B15.

**B7: CHECK THE FRT SENSOR RETURN LINE FOR OPEN CIRCUIT**

1. Key off.
2. ECM connector disconnected.
3. Measure the resistance between:

| | |
|---|---|
| Fuel rail temperature sensor - return - Pin 02 | Fuel rail temperature sensor - return - Pin C-G3 |

Is the resistance less than 10 ohms?
**Yes**
Suspect:- ECM connector- ECM
**No**
REPAIR the open circuit. For additional information, refer to the wiring diagrams.

**B8: CHECK FOR THE EXPECTED VOLTAGE DIFFERENTIAL BETWEEN SIGNAL AND RETURN LINES**

1. Measure the voltage between:

| | |
|---|---|
| Fuel rail temperature sensor - signal - Pin 01 | Fuel rail temperature sensor - return - Pin 02 |

Is the voltage between 4.8 volts - 5.2 volts?
**Yes**
GO to B12.
**No**
GO to B9.

**B9: CHECK THE FRT SIGNAL LINE FOR SHORT CIRCUIT TO GROUND**

1. Measure the resistance between:

| | |
|---|---|
| Fuel rail temperature sensor - signal - Pin 01 | Negative post |

Is the resistance greater than 100 Kohms?
**Yes**
GO to B10.
**No**
GO to B13.

**B10: CHECK THE FRT SIGNAL LINE FOR SHORT CIRCUIT TO POWER**

1. Measure the resistance between:

| | |
|---|---|
| Fuel rail temperature sensor - signal - Pin 01 | Positive post |

Is the resistance greater than 100 Kohms?
**Yes**
GO to B11.
**No**
GO to B16.

**B11: CHECK THE FRT SIGNAL LINE FOR OPEN CIRCUIT**

1. Key off.
2. ECM connector disconnected.
3. Measure the resistance between:

| | |
|---|---|
| Fuel rail temperature sensor - signal - Pin 01 | Fuel rail temperature sensor - signal - Pin C-B2 |

Is the resistance less than 10 ohms?
**Yes**
Suspect:- ECM connector- ECM
**No**
REPAIR the open circuit. For additional information, refer to the wiring diagrams.

**B12: CHECK THE COMPONENT RESISTANCE**

1. Measure the resistance between:

| | |
|---|---|
| Fuel rail temperature sensor - signal - Pin 01 | Fuel rail temperature sensor - return - Pin 02 |

Is the resistance between 1 Kohms - 500 Kohms?
**Yes**
An intermittent fault may be present in the wiring harness. Visually check for chaffed wires or other physical damage to the harness. If no fault is found in the circuit, suspect the following component(s):- FRT connector- FRT sensor- ECM connector- ECM
**No**
INSTALL a new FRT sensor.
REFER to: Fuel Temperature Sensor (303-14C Electronic Engine Controls - 2.7L V6 - TdV6, Removal and Installation).

**B13: CHECK THE FRT CIRCUIT(S) FOR SIGNAL AND RETURN LINES SHORTED TOGETHER**

1. Key off.
2. ECM connector disconnected.
3. Key on, engine off.
4. Measure the resistance between:

| | |
|---|---|
| Fuel rail temperature sensor - signal - Pin 01 | Fuel rail temperature sensor - return - Pin 02 |

Is the resistance greater than 100 Kohms?
**Yes**
GO to B14.
**No**
REPAIR the short circuit. For additional information, refer to the wiring diagrams.

**B14: CHECK WHETHER THE SHORT CIRCUIT TO GROUND IS IN THE FRT HARNESS OR ECU**

1. Measure the resistance between:

| | |
|---|---|
| Fuel rail temperature sensor - signal - Pin 01 | Negative post |

Is the resistance greater than 100 Kohms?
**Yes**
Suspect:- ECM
**No**
REPAIR the short circuit. For additional information, refer to the wiring diagrams.

**B15: CHECK WHETHER THE SHORT CIRCUIT TO POWER IS IN THE FRT HARNESS OR ECU**

1. Key off.
2. ECM connector disconnected.
3. Key on, engine off.
4. Measure the resistance between:

| | |
|---|---|
| Fuel rail temperature sensor - return - Pin 02 | Positive post |

GETtheMANUALS.org

| | |
|---|---|
| | Is the resistance greater than 100 Kohms?<br>**Yes**<br>Suspect:- ECM<br>**No**<br>REPAIR the short circuit. For additional information, refer to the wiring diagrams. |
| **B16: CHECK WHETHER THE SHORT CIRCUIT TO POWER IS IN THE FRT HARNESS OR ECU** | |
| | 1 Key off. |
| | 2 ECM connector disconnected. |
| | 3 Key on, engine off. |
| | 4 Measure the resistance between: |
| | Fuel rail temperature sensor - signal - Pin 01 / Positive post |
| | Is the resistance greater than 100 Kohms?<br>**Yes**<br>Suspect:- ECM<br>**No**<br>REPAIR the short circuit. For additional information, refer to the wiring diagrams. |

## Inspection and Verification

**This pinpoint test is intended to diagnose the following:**

- Short circuit to GROUND in the engine oil temperature, level, and quality sensor (EOTLQ) circuit
- Short circuit to POWER in the engine oil temperature, level, and quality sensor (EOTLQ) circuit
- Open circuit in the engine oil temperature, level, and quality sensor (EOTLQ) circuit
- Engine oil temperature, level, and quality sensor (EOTLQ)
- ECM

Engine oil temperature, level, and quality sensor. (EOTLQ) Connector

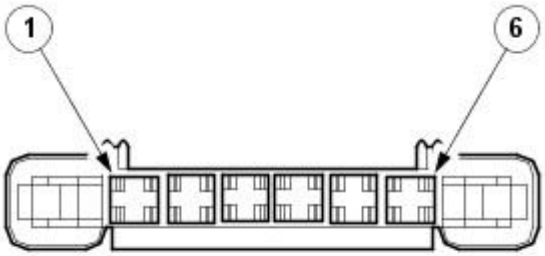


E54261

| | |
|---|---|
| Engine oil temperature, level, and quality sensor - signal | 01 |
| Engine oil temperature, level, and quality sensor - power | 03 |
| Engine oil temperature, level, and quality sensor - return | 02 |

Engine control module (ECM) connector

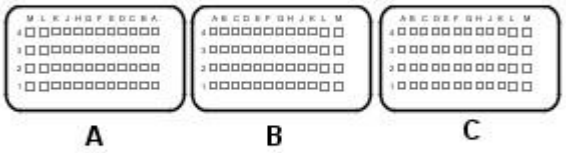


E54251

| | |
|---|---|
| Engine oil temperature, level, and quality sensor - return | C-D2 |
| Engine oil temperature, level, and quality sensor - power | C-C3 |
| Engine oil temperature, level, and quality sensor - signal | C-E1 |

## Pinpoint Tests

| **PINPOINT TEST C : ENGINE OIL TEMPERATURE (EOT) SENSOR** | |
|---|---|
| **TEST CONDITIONS** | **DETAILS/RESULTS/ACTIONS** |
| **C1: CHECK THE EOTLQ PID VALUE** | |
| | 1 Please ensure the engine is cold. |
| | 2 Key on, engine off. |
| | 3 Access the ECM-Engine oil temperature PID using a scan tool. |
| | Is the EOTLQ reading as expected for the current enviromental and engine conditions?<br>**Yes**<br>GO to C2.<br>**No**<br>GO to C5. |
| **C2: CHECK THE EOTLQ PID VALUE** | |
| | 1 Key on, engine run. |
| | 2 Access the ECM-Engine oil temperature and OBDII-Engine coolant temperature PIDs using a scan tool. |

GETtheMANUALS.org

| | |
|---|---|
| | 3 Increase the engine speed to 2000RPM and monitor the EOT reading, until the engine is at full operating temperature. |
| | Did the EOTLQ reading rise smoothly and by more than 20 degrees C (68 degrees F)?<br>**Yes**<br>No fault found.<br>**No**<br>GO to C3. |
| **C3: CHECK THE EOTLQ PID VALUE** | |
| | 1 Key off. |
| | Were there any sudden or unexpected changes in the EOT readings?<br>**Yes**<br>GO to C4.<br>**No**<br>GO to C5. |
| **C4: CHECK THE EOTLQ PID VALUE** | |
| | 1 Key on, engine off. |
| | 2 Access the ECM-Engine oil temperature PID using a scan tool. |
| | 3 Check the EOTLQ harness wiring and connectors for loose connections and water ingress. Monitoring the temperature readings for sudden changes, while handling the harness and connectors, may help in isolation of these types of fault. |
| | Did you identify any loose connections or water ingress in EOTLQ harness wiring and connectors?<br>**Yes**<br>REPAIR the fault as necessary.<br>**No**<br>GO to C5. |
| **C5: CHECK THE EOTLQ SENSOR RETURN LINE** | |
| | 1 Key off. |
| | 2 EOTLQ connector disconnected. |
| | 3 Key on, engine off. |
| | 4 Measure the resistance between: |
| | Engine oil temperature, level, and quality sensor - return - Pin 02 / Negative post |
| | Is the resistance less than 10 ohms?<br>**Yes**<br>GO to C6.<br>**No**<br>GO to C18. |
| **C6: CHECK THE EOTLQ VOLTAGE** | |
| | 1 Measure the voltage between: |
| | Engine oil temperature, level, and quality sensor - power - Pin 03 / Negative post |
| | Is the voltage between 4.8 volts - 5.2 volts?<br>**Yes**<br>GO to C7.<br>**No**<br>GO to C15. |
| **C7: CHECK THE EOTLQ SIGNAL LINE FOR SHORT CIRCUIT TO GROUND** | |
| | 1 Measure the resistance between: |
| | Engine oil temperature, level, and quality sensor - signal - Pin 01 / Negative post |
| | Is the resistance greater than 100 Kohms?<br>**Yes**<br>GO to C8.<br>**No**<br>GO to C11. |
| **C8: CHECK THE EOTLQ SIGNAL LINE FOR SHORT CIRCUIT TO POWER** | |
| | 1 Measure the resistance between: |
| | Engine oil temperature, level, and quality sensor - signal - Pin 01 / Positive post |
| | Is the resistance greater than 100 Kohms?<br>**Yes**<br>GO to C9.<br>**No**<br>GO to C13. |
| **C9: CHECK THE EOTLQ SIGNAL LINE FOR SHORT CIRCUIT TO SENSOR POWER** | |
| | 1 Measure the resistance between: |
| | Engine oil temperature, level, and quality sensor - signal - Pin 01 / Engine oil temperature, level, and quality sensor - power - Pin 03 |
| | Is the resistance greater than 100 Kohms?<br>**Yes**<br>GO to C10.<br>**No**<br>GO to C14. |
| **C10: CHECK THE EOTLQ SIGNAL LINE FOR OPEN CIRCUIT** | |
| | 1 Key off. |
| | 2 ECM connector disconnected. |
| | 3 Measure the resistance between: |
| | Engine oil temperature, level, and quality sensor - signal - Pin 01 / Engine oil temperature, level, and quality sensor - signal - Pin C-E1 |
| | Is the resistance less than 10 ohms?<br>**Yes**<br>An intermittent fault may be present in the wiring harness. Visually check for chaffed wires or other physical damage to the harness. If no fault is found in the circuit, suspect the following component(s):- EOTLQ connector- ECM connector- EOTLQ sensor- ECM<br>**No**<br>REPAIR the open circuit. For additional information, refer to the wiring diagrams. |
| **C11: CHECK THE EOTLQ CIRCUIT(S) FOR SIGNAL AND RETURN LINES SHORTED TOGETHER** | |
| | 1 Key off. |
| | 2 ECM connector disconnected. |
| | 3 Key on, engine off. |

GETtheMANUALS.org

| | |
|---|---|
| | 4 Measure the resistance between: |
| | Engine oil temperature, level, and quality sensor - signal - Pin 01 / Engine oil temperature, level, and quality sensor - return - Pin 02 |
| | Is the resistance greater than 100 Kohms?<br>**Yes**<br>GO to C12.<br>**No**<br>REPAIR the short circuit. For additional information, refer to the wiring diagrams. |
| **C12: CHECK WHETHER THE SHORT CIRCUIT TO GROUND IS IN THE EOTLQ HARNESS OR ECU** | |
| | 1 Measure the resistance between: |
| | Engine oil temperature, level, and quality sensor - signal - Pin 01 / Negative post |
| | Is the resistance greater than 100 Kohms?<br>**Yes**<br>Suspect:- ECM<br>**No**<br>REPAIR the short circuit. For additional information, refer to the wiring diagrams. |
| **C13: CHECK WHETHER THE SHORT CIRCUIT TO POWER IS IN THE EOTLQ HARNESS OR ECU** | |
| | 1 Key off. |
| | 2 ECM connector disconnected. |
| | 3 Key on, engine off. |
| | 4 Measure the resistance between: |
| | Engine oil temperature, level, and quality sensor - signal - Pin 01 / Positive post |
| | Is the resistance greater than 100 Kohms?<br>**Yes**<br>Suspect:- ECM<br>**No**<br>REPAIR the short circuit. For additional information, refer to the wiring diagrams. |
| **C14: CHECK WHETHER THE SHORT CIRCUIT IS IN THE EOTLQ HARNESS OR CONTROL UNIT** | |
| | 1 Key off. |
| | 2 ECM connector disconnected. |
| | 3 Key on, engine off. |
| | 4 Measure the resistance between: |
| | Engine oil temperature, level, and quality sensor - signal - Pin 01 / Engine oil temperature, level, and quality sensor - power - Pin 03 |
| | Is the resistance greater than 100 Kohms?<br>**Yes**<br>Suspect:- ECM<br>**No**<br>REPAIR the short circuit. For additional information, refer to the wiring diagrams. |
| **C15: CHECK THE 5 VOLT SUPPLY LINE FOR SHORT CIRCUIT TO GROUND** | |
| | 1 Measure the Resistance between: |
| | Engine oil temperature, level, and quality sensor - power - Pin 03 / Negative post |
| | Is the resistance greater than 100 Kohms?<br>**Yes**<br>GO to C16.<br>**No**<br>GO to C21. |
| **C16: CHECK THE 5 VOLT SUPPLY LINE FOR SHORT CIRCUIT TO POWER** | |
| | 1 Measure the resistance between: |
| | Engine oil temperature, level, and quality sensor - power - Pin 03 / Positive post |
| | Is the resistance greater than 100 Kohms?<br>**Yes**<br>GO to C17.<br>**No**<br>GO to C23. |
| **C17: CHECK THE EOTLQ 5 VOLT SUPPLY LINE FOR OPEN CIRCUIT** | |
| | 1 Key off. |
| | 2 ECM connector disconnected. |
| | 3 Measure the resistance between: |
| | Engine oil temperature, level, and quality sensor - power - Pin 03 / Engine oil temperature, level, and quality sensor - power - Pin C-C3 |
| | Is the resistance less than 10 ohms?<br>**Yes**<br>Suspect :- ECM connector- ECM<br>**No**<br>REPAIR the open circuit. For additional information, refer to the wiring diagrams. |
| **C18: CHECK THE EOTLQ SENSOR RETURN LINE FOR SHORT CIRCUIT TO POWER** | |
| | 1 Measure the resistance between: |
| | Engine oil temperature, level, and quality sensor - return - Pin 02 / Positive post |
| | Is the resistance greater than 100 Kohms?<br>**Yes**<br>GO to C19.<br>**No**<br>GO to C24. |
| **C19: CHECK WHETHER THE 5 VOLT SUPPLY AND SIGNAL RETURN LINES ARE SHORTED TOGETHER** | |
| | 1 Key off. |
| | 2 ECM connector disconnected. |
| | 3 Key on, engine off. |
| | 4 Measure the resistance between: |
| | Engine oil temperature, level, and quality sensor - power - Pin 03 / Engine oil temperature, level, and quality sensor - return - Pin 02 |

GETtheMANUALS.org

| | |
|---|---|
| | Is the resistance greater than 100 Kohms?<br>**Yes**<br>GO to C20.<br>**No**<br>REPAIR the short circuit. For additional information, refer to the wiring diagrams. |
| **C20: CHECK THE EOTLQ SENSOR RETURN LINE FOR OPEN CIRCUIT** | |
| | 1 Measure the resistance between:<br>Engine oil temperature, level, and quality sensor - return - Pin 02 / Engine oil temperature, level, and quality sensor - return - Pin C-D2 |
| | Is the resistance less than 10 ohm?<br>**Yes**<br>Suspect :- ECM connector.- ECM<br>**No**<br>REPAIR the open circuit. For additional information, refer to the wiring diagrams. |
| **C21: CHECK WHETHER THE 5 VOLT SUPPLY AND SIGNAL RETURN LINES ARE SHORTED TOGETHER** | |
| | 1 Key off.<br>2 ECM connector disconnected.<br>3 Key on, engine off.<br>4 Measure the resistance between:<br>Engine oil temperature, level, and quality sensor - power - Pin 03 / Engine oil temperature, level, and quality sensor - return - Pin 02 |
| | Is the resistance greater than 100 Kohms?<br>**Yes**<br>GO to C22.<br>**No**<br>REPAIR the short circuit. For additional information, refer to the wiring diagrams. |
| **C22: CHECK WHETHER THE SHORT CIRCUIT TO GROUND IS IN THE EOTLQ HARNESS OR ECU** | |
| | 1 Measure the resistance between:<br>Engine oil temperature, level, and quality sensor - power - Pin 03 / Negative post |
| | Is the resistance greater than 100 Kohms?<br>**Yes**<br>Suspect:- ECM<br>**No**<br>REPAIR the short circuit. For additional information, refer to the wiring diagrams. |
| **C23: CHECK WHETHER THE SHORT CIRCUIT TO POWER IS IN THE EOTLQ HARNESS OR ECU** | |
| | 1 Key off.<br>2 ECM connector disconnected.<br>3 Key on, engine off.<br>4 Measure the resistance between:<br>Engine oil temperature, level, and quality sensor - return - Pin 02 / Positive post |
| | Is the resistance greater than 100 Kohms?<br>**Yes**<br>Suspect:- ECM<br>**No**<br>REPAIR the short circuit. For additional information, refer to the wiring diagrams. |
| **C24: CHECK WHETHER THE SHORT CIRCUIT TO POWER IS IN THE EOTLQ HARNESS OR ECU** | |
| | 1 Key off.<br>2 ECM connector disconnected.<br>3 Key on, engine off.<br>4 Measure the resistance between:<br>Engine oil temperature, level, and quality sensor - return - Pin 02 / Positive post |
| | Is the resistance greater than 100 Kohms?<br>**Yes**<br>Suspect:- ECM<br>**No**<br>REPAIR the short circuit. For additional information, refer to the wiring diagrams. |

## Inspection and Verification

**This pinpoint test is intended to diagnose the following:**

- Short circuit to GROUND in the accelerator pedal position (APP) sensor 1 circuit
- Short circuit to POWER in the accelerator pedal position (APP) sensor 1 circuit
- Open circuit in the accelerator pedal position (APP) sensor 1 circuit
- Accelerator pedal position sensor 1
- ECM

Accelerator pedal position (APP) sensor connector

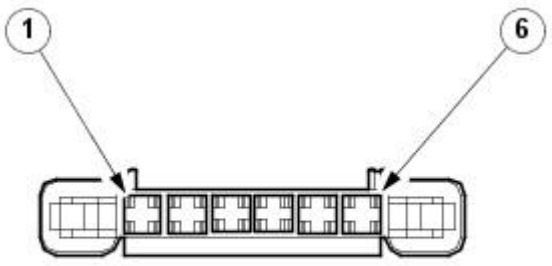


E54270

GETtheMANUALS.org

| | |
|---|---|
| Accelerator pedal position sensor 1 - signal | 04 |

| | |
|---|---|
| Accelerator pedal position sensor 1 - power | 05 |
| Accelerator pedal position sensor 1 - return | 03 |

Engine control module (ECM) connector

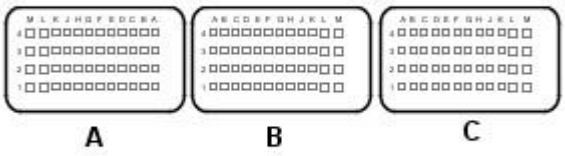


E54251

| | |
|---|---|
| Accelerator pedal position sensor 1 - return | A-C1 |
| Accelerator pedal position sensor 1 - power | A-E1 |
| Accelerator pedal position sensor 1 - signal | A-D1 |

## Pinpoint Tests

| PINPOINT TEST D : ACCELERATOR PEDAL POSITION (APP) SENSOR 1 | |
|---|---|
| **TEST CONDITIONS** | **DETAILS/RESULTS/ACTIONS** |
| **D1: CHECK THE APP1 VALUE, WITH THE ACCELERATOR PEDAL RELEASED** | |
| | 1 Key on, engine off. |
| | 2 Ensure the accelerator pedal is released. |
| | 3 Access the ECM-Pedal position sensor 1 (voltage) PID using a scan tool. |
| | Is the voltage between 0 volts - 1 volts?<br>**Yes**<br>GO to D2.<br>**No**<br>GO to D3. |
| **D2: CHECK THE APP1 VALUE, WITH THE ACCELERATOR FULLY DEPRESSED** | |
| | 1 Ensure the accelerator pedal is fully depressed. |
| | 2 Access the ECM-Pedal position sensor 1 (voltage) PID using a scan tool. |
| | Is the voltage between 2.2 volts - 2.7 volts?<br>**Yes**<br>No fault found.<br>**No**<br>GO to D3. |
| **D3: CHECK THE APP1 SENSOR RETURN LINE** | |
| | 1 Key off. |
| | 2 APP Sensor connector disconnected. |
| | 3 Key on, engine off. |
| | 4 Measure the resistance between: |
| | Accelerator pedal position sensor 1 - return - Pin 03 — Negative post |
| | Is the resistance less than 10 ohms?<br>**Yes**<br>GO to D4.<br>**No**<br>GO to D21. |
| **D4: CHECK THE APP1 VOLTAGE** | |
| | 1 Measure the voltage between: |
| | Accelerator pedal position sensor 1 - power - Pin 05 — Negative post |
| | Is the voltage between 4.8 volts - 5.2 volts?<br>**Yes**<br>GO to D5.<br>**No**<br>GO to D13. |
| **D5: CHECK THE APP1 SIGNAL LINE FOR SHORT CIRCUIT TO GROUND** | |
| | 1 Measure the resistance between: |
| | Accelerator pedal position sensor 1 - signal - Pin 04 — Negative post |
| | Is the resistance greater than 100 Kohms?<br>**Yes**<br>GO to D6.<br>**No**<br>GO to D9. |
| **D6: CHECK THE APP1 SIGNAL LINE FOR SHORT CIRCUIT TO POWER** | |
| | 1 Measure the resistance between: |
| | Accelerator pedal position sensor 1 - signal - Pin 04 — Positive post |
| | Is the resistance greater than 100 Kohms?<br>**Yes**<br>GO to D7.<br>**No**<br>GO to D11. |
| **D7: CHECK FOR SHORT CIRCUIT BETWEEN THE APP1 SIGNAL AND THE POWER LINE** | |
| | 1 Measure the resistance between: |
| | Accelerator pedal position sensor 1 - signal - Pin 04 — Accelerator pedal position sensor 1 - power - Pin 05 |

GETtheMANUALS.org

Is the resistance greater than 100 Kohms?
**Yes**
GO to D8.
**No**
GO to D12.

**D8: CHECK THE APP1 SIGNAL LINE FOR OPEN CIRCUIT**

1. Key off.
2. ECM connector disconnected.
3. Measure the resistance between:

| | |
|---|---|
| Accelerator pedal position sensor 1 - signal - Pin 04 | Accelerator pedal position sensor 1 - signal - Pin A-D1 |

Is the resistance less than 10 ohms?
**Yes**
An intermittent fault may be present in the wiring harness. Visually check for chaffed wires or other physical damage to the harness. If no fault is found in the circuit, suspect the following component(s):- APP connector- APP sensor- ECM connector- ECM
**No**
REPAIR the open circuit. For additional information, refer to the wiring diagrams.

**D9: CHECK THE APP1 CIRCUIT(S) FOR SIGNAL AND RETURN LINES SHORTED TOGETHER**

1. Key off.
2. ECM connector disconnected.
3. Key on, engine off.
4. Measure the Resistance between:

| | |
|---|---|
| Accelerator pedal position sensor 1 - signal - Pin 04 | Accelerator pedal position sensor 1 - return - Pin 03 |

Is the resistance greater than 100 Kohms?
**Yes**
GO to D10.
**No**
REPAIR the short circuit. For additional information, refer to the wiring diagrams.

**D10: CHECK WHETHER THE SHORT CIRCUIT TO GROUND IS IN THE APP1 HARNESS OR ECU**

1. Measure the resistance between:

| | |
|---|---|
| Accelerator pedal position sensor 1 - signal - Pin 04 | Negative post |

Is the resistance greater than 100 Kohms?
**Yes**
Suspect:- ECM
**No**
REPAIR the short circuit. For additional information, refer to the wiring diagrams.

**D11: CHECK WHETHER THE SHORT CIRCUIT TO POWER IS IN THE APP1 HARNESS OR ECU**

1. Key off.
2. ECM connector disconnected.
3. Key on, engine off.
4. Measure the resistance between:

| | |
|---|---|
| Accelerator pedal position sensor 1 - signal - Pin 04 | Positive post |

Is the resistance greater than 100 Kohms?
**Yes**
Suspect:- ECM
**No**
REPAIR the short circuit. For additional information, refer to the wiring diagrams.

**D12: CHECK WHETHER SHORT CIRCUIT IS IN APP1 HARNESS OR CONTROL UNIT**

1. Key off.
2. ECM connector disconnected.
3. Key on, engine off.
4. Measure the resistance between:

| | |
|---|---|
| Accelerator pedal position sensor 1 - signal - Pin 04 | Accelerator pedal position sensor 1 - power - Pin 05 |
| Accelerator pedal position sensor 1 - signal - Pin 04 | Accelerator pedal position sensor 1 - return - Pin 03 |

Are the resistances greater than 100 Kohms?
**Yes**
Suspect:-ECM
**No**
REPAIR the short circuit. For additional information, refer to the wiring diagrams.

**D13: CHECK THE 5 VOLT SUPPLY LINE FOR SHORT CIRCUIT TO GROUND**

1. Measure the resistance between:

| | |
|---|---|
| Accelerator pedal position sensor 1 - power - Pin 05 | Negative post |

Is the resistance greater than 100 Kohms?
**Yes**
GO to D14.
**No**
GO to D18.

**D14: CHECK THE 5 VOLT SUPPLY LINE FOR SHORT CIRCUIT TO POWER**

1. Measure the resistance between:

| | |
|---|---|
| Accelerator pedal position sensor 1 - power - Pin 05 | Positive post |

Is the resistance greater than 100 Kohms?
**Yes**
GO to D15.
**No**
GO to D20.

**D15: CHECK THE APP1 5 VOLT SUPPLY LINE FOR OPEN CIRCUIT**

1. Key off.
2. ECM connector disconnected.
3. Measure the resistance between:

| | |
|---|---|
| Accelerator pedal position sensor 1 - power - Pin 05 | Accelerator pedal position sensor 1 - power - Pin A-E1 |

Is the resistance less than 10 ohms?
**Yes**
Suspect :- ECM connector- ECM
GETtheMANUALS.org
**No**

| | |
|---|---|
| | REPAIR the open circuit. For additional information, refer to the wiring diagrams. |
| **D16: CHECK WHETHER THE 5 VOLT SUPPLY AND SIGNAL RETURN LINES ARE SHORTED TOGETHER** | |
| | 1 Key off. |
| | 2 ECM connector disconnected. |
| | 3 Key on, engine off. |
| | 4 Measure the resistance between: |
| | Accelerator pedal position sensor 1 - power - Pin 05 / Accelerator pedal position sensor 1 - return - Pin 03 |
| | Is the resistance greater than 100 Kohms?<br>**Yes**<br>GO to D17.<br>**No**<br>REPAIR the short circuit. For additional information, refer to the wiring diagrams. |
| **D17: CHECK THE APP1 SENSOR RETURN LINE FOR OPEN CIRCUIT** | |
| | 1 Measure the resistance between: |
| | Accelerator pedal position sensor 1 - return - Pin 03 / Accelerator pedal position sensor 1 - return - Pin A-C1 |
| | Is the resistance less than 10 ohms?<br>**Yes**<br>Suspect :- ECM connector- ECM<br>**No**<br>REPAIR the open circuit. For additional information, refer to the wiring diagrams. |
| **D18: CHECK WHETHER THE 5 VOLT SUPPLY AND SIGNAL RETURN LINES ARE SHORTED TOGETHER** | |
| | 1 Key off. |
| | 2 ECM connector disconnected. |
| | 3 Key on, engine off. |
| | 4 Measure the resistance between: |
| | Accelerator pedal position sensor 1 - power - Pin 05 / Accelerator pedal position sensor 1 - return - Pin 03 |
| | Is the resistance greater than 100 Kohms?<br>**Yes**<br>GO to D19.<br>**No**<br>REPAIR the short circuit. For additional information, refer to the wiring diagrams. |
| **D19: CHECK WHETHER THE SHORT CIRCUIT TO GROUND IS IN THE APP1 HARNESS OR ECU** | |
| | 1 Measure the resistance between: |
| | Accelerator pedal position sensor 1 - power - Pin 05 / Negative post |
| | Is the resistance greater than 100 Kohms?<br>**Yes**<br>Suspect:- ECM<br>**No**<br>REPAIR the short circuit. For additional information, refer to the wiring diagrams. |
| **D20: CHECK WHETHER THE SHORT CIRCUIT TO POWER IS IN THE APP1 HARNESS OR ECU** | |
| | 1 Key off. |
| | 2 ECM connector disconnected. |
| | 3 Key on, engine off. |
| | 4 Measure the resistance between: |
| | Accelerator pedal position sensor 1 - power - Pin 05 / Positive post |
| | Is the resistance greater than 100 Kohms?<br>**Yes**<br>Suspect:- ECM<br>**No**<br>REPAIR the short circuit. For additional information, refer to the wiring diagrams. |
| **D21: CHECK THE APP1 SENSOR RETURN LINE FOR SHORT CIRCUIT TO POWER** | |
| | 1 Measure the resistance between: |
| | Accelerator pedal position sensor 1 - return - Pin 03 / Positive post |
| | Is the resistance greater than 100 Kohms?<br>**Yes**<br>GO to D16.<br>**No**<br>GO to D22. |
| **D22: CHECK WHETHER THE SHORT CIRCUIT TO POWER IS IN THE APP1 HARNESS OR ECU** | |
| | 1 Key off. |
| | 2 ECM connector disconnected. |
| | 3 Key on, engine off. |
| | 4 Measure the resistance between: |
| | Accelerator pedal position sensor 1 - return - Pin 03 / Positive post |
| | Is the resistance greater than 100 Kohms?<br>**Yes**<br>Suspect:- ECM<br>**No**<br>REPAIR the short circuit. For additional information, refer to the wiring diagrams. |

## Inspection and Verification

**This pinpoint test is intended to diagnose the following:**

- Short circuit to GROUND in the accelerator pedal position (APP) sensor 2 circuit
- Short circuit to POWER in the accelerator pedal position (APP) sensor 2 circuit
- Open circuit in the accelerator pedal position (APP) sensor 2 circuit
- Accelerator pedal position sensor 2
- ECM

Accelerator pedal position (APP) sensor connector

GETtheMANUALS.org

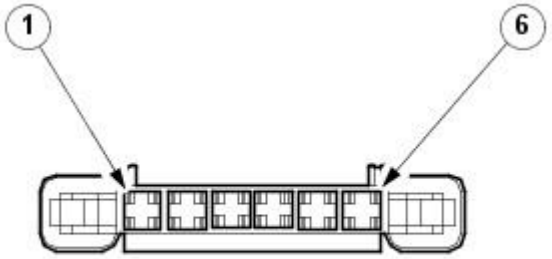


E54270

| | |
|---|---|
| Accelerator pedal position sensor 2 - signal | 01 |
| Accelerator pedal position sensor 2 - power | 02 |
| Accelerator pedal position sensor 2 - return | 06 |

Engine control module (ECM) connector

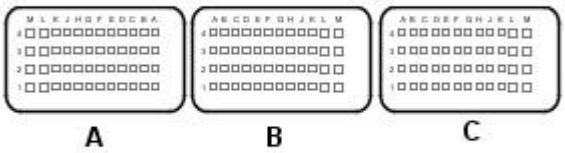


E54251

| | |
|---|---|
| Accelerator pedal position sensor 2 - return | A-B2 |
| Accelerator pedal position sensor 2 - power | A-D2 |
| Accelerator pedal position sensor 2 - signal | A-C2 |

## Pinpoint Tests

| PINPOINT TEST E : ACCELERATOR PEDAL POSITION (APP) SENSOR 2 | |
|---|---|
| **TEST CONDITIONS** | **DETAILS/RESULTS/ACTIONS** |
| **E1: CHECK THE APP2 VALUE, WITH THE ACCELERATOR PEDAL RELEASED** | |
| | 1 Key on, engine off. |
| | 2 Ensure the accelerator pedal is released. |
| | 3 Access the ECM-Pedal position sensor 2 (voltage) PID using a scan tool. |
| | Is the voltage between 3 volts - 5 volts?<br>**Yes**<br>GO to E2.<br>**No**<br>GO to E3. |
| **E2: CHECK THE APP2 VALUE, WITH THE ACCELERATOR FULLY DEPRESSED** | |
| | 1 Ensure the accelerator pedal is fully depressed. |
| | 2 Access the ECM-Pedal position sensor 2 (voltage) PID using a scan tool. |
| | Is the voltage between 2.2 volts - 2.7 volts?<br>**Yes**<br>No fault found.<br>**No**<br>GO to E3. |
| **E3: CHECK THE APP2 SENSOR RETURN LINE** | |
| | 1 Key off. |
| | 2 APP Sensor connector disconnected. |
| | 3 Key on, engine off. |
| | 4 Measure the resistance between: |
| | Accelerator pedal position sensor 2 - return - Pin 06 — Negative post |
| | Is the resistance less than 10 Ohm?<br>**Yes**<br>GO to E4.<br>**No**<br>GO to E16. |
| **E4: CHECK THE APP2 VOLTAGE** | |
| | 1 Measure the voltage between: |
| | Accelerator pedal position sensor 2 - power - Pin 02 — Negative post |
| | Is the voltage between 4.8 volts - 5.2 volts?<br>**Yes**<br>GO to E5.<br>**No**<br>GO to E13. |
| **E5: CHECK THE APP2 SIGNAL LINE FOR SHORT CIRCUIT TO GROUND** | |
| | 1 Measure the resistance between: |
| | Accelerator pedal position sensor 2 - signal - Pin 01 — Negative post |

GETtheMANUALS.org

Is the resistance greater than 100 Kohms?
**Yes**
GO to E6.
**No**
GO to E9.

**E6: CHECK THE APP2 SIGNAL LINE FOR SHORT CIRCUIT TO POWER**

1. Measure the resistance between:

| | |
|---|---|
| Accelerator pedal position sensor 2 - signal - Pin 01 | Positive post |

Is the resistance greater than 100 Kohms?
**Yes**
GO to E7.
**No**
GO to E11.

**E7: CHECK FOR SHORT CIRCUIT BETWEEN THE APP2 SIGNAL AND THE POWER LINE**

1. Measure the resistance between:

| | |
|---|---|
| Accelerator pedal position sensor 2 - signal - Pin 01 | Accelerator pedal position sensor 2 - power - Pin 02 |

Is the resistance greater than 100 Kohms?
**Yes**
GO to E8.
**No**
GO to E12.

**E8: CHECK THE APP2 SIGNAL LINE FOR OPEN CIRCUIT**

1. Key off.
2. ECM connector disconnected.
3. Measure the resistance between:

| | |
|---|---|
| Accelerator pedal position sensor 2 - signal - Pin 01 | Accelerator pedal position sensor 2 - signal - Pin A-C2 |

Is the resistance less than 10 ohms?
**Yes**
An intermittent fault may be present in the wiring harness. Visually check for chaffed wires or other physical damage to the harness. If no fault is found in the circuit, suspect the following component(s):- APP connector- APP sensor- ECM connector- ECM
**No**
REPAIR the open circuit. For additional information, refer to the wiring diagrams.

**E9: CHECK THE APP2 CIRCUIT(S) FOR SIGNAL AND RETURN LINES SHORTED TOGETHER**

1. Key off.
2. ECM connector disconnected.
3. Key on, engine off.
4. Measure the resistance between:

| | |
|---|---|
| Accelerator pedal position sensor 2 - signal - Pin 01 | Accelerator pedal position sensor 2 - return - Pin 06 |

Is the resistance greater than 100 Kohms?
**Yes**
GO to E10.
**No**
REPAIR the short circuit. For additional information, refer to the wiring diagrams.

**E10: CHECK WHETHER THE SHORT CIRCUIT TO GROUND IS IN THE APP2 HARNESS OR ECU**

1. Measure the resistance between:

| | |
|---|---|
| Accelerator pedal position sensor 2 - signal - Pin 01 | Negative post |

Is the resistance greater than 100 Kohms?
**Yes**
Suspect: - ECM
**No**
REPAIR the short circuit. For additional information, refer to the wiring diagrams.

**E11: CHECK WHETHER THE SHORT CIRCUIT TO POWER IS IN THE APP2 HARNESS OR ECU**

1. Key off.
2. ECM connector disconnected.
3. Key on, engine off.
4. Measure the resistance between:

| | |
|---|---|
| Accelerator pedal position sensor 2 - signal - Pin 01 | Positive post |

Is the resistance greater than 100 Kohms?
**Yes**
Suspect: - ECM
**No**
REPAIR the short circuit. For additional information, refer to the wiring diagrams.

**E12: CHECK WHETHER THE SHORT CIRCUIT IS IN THE APP2 HARNESS OR CONTROL UNIT**

1. Key off.
2. ECM connector disconnected.
3. Measure the resistance between:

| | |
|---|---|
| Accelerator pedal position sensor 2 - signal - Pin 01 | Accelerator pedal position sensor 2 - power - Pin 02 |

Is the resistance greater than 100 Kohms?
**Yes**
Suspect: - ECM
**No**
REPAIR the short circuit. For additional information, refer to the wiring diagrams.

**E13: CHECK THE 5 VOLT SUPPLY LINE FOR SHORT CIRCUIT TO GROUND**

1. Measure the resistance between:

| | |
|---|---|
| Accelerator pedal position sensor 2 - power - Pin 02 | Negative post |

Is the resistance greater than 100 Kohms?
**Yes**
GO to E14.
**No**
GO to E19.

**E14: CHECK THE 5 VOLT SUPPLY LINE FOR SHORT CIRCUIT TO POWER**

1. Measure the resistance between:

| | |
|---|---|
| Accelerator pedal position sensor 2 - power - Pin 02 | Positive post |

GETtheMANUALS.org

| | |
|---|---|
| | Is the resistance greater than 100 Kohms?<br>**Yes**<br>GO to E15.<br>**No**<br>GO to E21. |
| **E15: CHECK THE APP2 5 VOLT SUPPLY LINE FOR OPEN CIRCUIT** | |
| | 1 Key off.<br>2 ECM connector disconnected.<br>3 Measure the resistance between:<br>Accelerator pedal position sensor 2 - power - Pin 02 / Accelerator pedal position sensor 2 - power - Pin A-D2 |
| | Is the resistance less than 10 ohms?<br>**Yes**<br>Suspect :- ECM connector- ECM<br>**No**<br>REPAIR the open circuit. For additional information, refer to the wiring diagrams. |
| **E16: CHECK THE APP2 SENSOR RETURN LINE FOR SHORT CIRCUIT TO POWER** | |
| | 1 Measure the resistance between:<br>Accelerator pedal position sensor 2 - return - Pin 06 / Positive post |
| | Is the resistance greater than 100 Kohms?<br>**Yes**<br>GO to E17.<br>**No**<br>GO to E22. |
| **E17: CHECK WHETHER THE 5 VOLT SUPPLY AND SIGNAL RETURN LINES ARE SHORTED TOGETHER** | |
| | 1 Key off.<br>2 ECM connector disconnected.<br>3 Key on, engine off.<br>4 Measure the resistance between:<br>Accelerator pedal position sensor 2 - power - Pin 02 / Accelerator pedal position sensor 2 - return - Pin 06 |
| | Is the resistance greater than 100 Kohms?<br>**Yes**<br>GO to E18. .<br>**No**<br>REPAIR the short circuit. For additional information, refer to the wiring diagrams. |
| **E18: CHECK THE APP2 SENSOR RETURN LINE FOR OPEN CIRCUIT** | |
| | 1 Measure the resistance between:<br>Accelerator pedal position sensor 2 - return - Pin 06 / Accelerator pedal position sensor 2 - return - Pin A-B2 |
| | Is the resistance less than 10 ohms?<br>**Yes**<br>Suspect :- ECM connector- ECM<br>**No**<br>REPAIR the open circuit. For additional information, refer to the wiring diagrams. |
| **E19: CHECK WHETHER THE 5 VOLT SUPPLY AND SIGNAL RETURN LINES ARE SHORTED TOGETHER** | |
| | 1 Key off.<br>2 ECM connector disconnected.<br>3 Measure the resistance between:<br>Accelerator pedal position sensor 2 - power - Pin 02 / Accelerator pedal position sensor 2 - return - Pin 06 |
| | Is the resistance greater than 100 Kohms?<br>**Yes**<br>GO to E20.<br>**No**<br>REPAIR the short circuit. For additional information, refer to the wiring diagrams. |
| **E20: CHECK WHETHER THE SHORT CIRCUIT TO GROUND IS IN THE APP2 HARNESS OR ECU** | |
| | 1 Measure the resistance between:<br>Accelerator pedal position sensor 2 - power - Pin 02 / Negative post |
| | Is the resistance greater than 100 Kohms?<br>**Yes**<br>Suspect:- ECM<br>**No**<br>REPAIR the short circuit. For additional information, refer to the wiring diagrams. |
| **E21: CHECK WHETHER THE SHORT CIRCUIT TO POWER IS IN THE APP2 HARNESS OR ECU** | |
| | 1 Key off.<br>2 ECM connector disconnected.<br>3 Key on, engine off.<br>4 Measure the resistance between:<br>Accelerator pedal position sensor 2 - power - Pin 02 / Positive post |
| | Is the resistance greater than 100 Kohms?<br>**Yes**<br>Suspect:- ECM<br>**No**<br>REPAIR the short circuit. For additional information, refer to the wiring diagrams. |
| **E22: CHECK WHETHER THE SHORT CIRCUIT TO POWER IS IN THE APP2 HARNESS OR ECU** | |
| | 1 Key off.<br>2 ECM connector disconnected.<br>3 Key on, engine off.<br>4 Measure the resistance between:<br>Accelerator pedal position sensor 2 - return - Pin 06 / Positive post |
| | Is the resistance greater than 100 Kohms?<br>**Yes**<br>Suspect:- ECM<br>**No**<br>REPAIR the short circuit. For additional information, refer to the wiring diagrams. |

GETtheMANUALS.org

**Inspection and Verification**

**This pinpoint test is intended to diagnose the following:**

- Short circuit to GROUND in the air charge temperature (ACT) sensor circuit
- Short circuit to POWER in the air charge temperature (ACT) sensor circuit
- Open circuit in the air charge temperature (ACT) sensor circuit
- Air charge temperature (ACT) sensor
- ECM

Air charge temperature (ACT) sensor connector

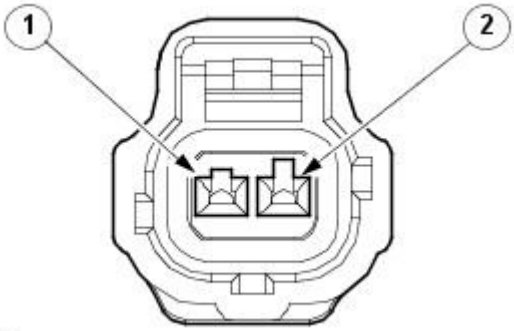


E54262

| | |
|---|---|
| Air charge temperature sensor - signal | 01 |
| Air charge temperature sensor - return | 02 |

Engine control module (ECM) connector

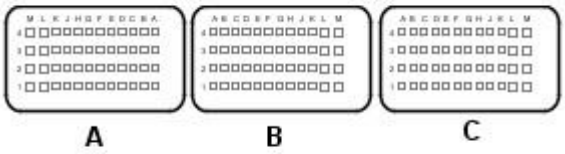


E54251

| | |
|---|---|
| Air charge temperature sensor - signal | C-B1 |
| Air charge temperature sensor - return | C-G3 |

**Air charge temperature sensor characteristics**

| Resistance (ohms) | Temperature (degrees C) | Temperature (degrees F) | Volts |
|---|---|---|---|
| 209603 | -40 | -40 | 4.9179 |
| 120372 | -30 | -22 | 4.8587 |
| 71668 | -20 | -04 | 4.7672 |
| 44087 | -10 | 14 | 4.6323 |
| 27936 | 0 | 32 | 4.4433 |
| 18187 | 10 | 50 | 4.1931 |
| 12136 | 20 | 68 | 3.8808 |
| 8284 | 30 | 86 | 3.5149 |
| 5774 | 40 | 104 | 3.1130 |
| 4103 | 50 | 122 | 2.6983 |
| 2967 | 60 | 140 | 2.2940 |
| 2182 | 70 | 158 | 1.9201 |
| 1628 | 80 | 176 | 1.5874 |
| 1233 | 90 | 194 | 1.3026 |
| 949 | 100 | 212 | 1.0639 |
| 735 | 110 | 230 | 0.8678 |
| 578 | 120 | 248 | 0.7087 |
| 459 | 130 | 266 | 0.5797 |

## Pinpoint Tests

| PINPOINT TEST F : AIR CHARGE TEMPERATURE (ACT) SENSOR | |
|---|---|
| **TEST CONDITIONS** | **DETAILS/RESULTS/ACTIONS** |
| **F1: CHECK THE ACT SENSOR RETURN LINE** | |
| | 1 Key off. |
| | 2 ACT connector disconnected. |
| | 3 Key on, engine off. |
| | 4 Measure the resistance between: |
| | Air charge temperature sensor - return - Pin 02 — Negative post |
| | Is the resistance less than 10 ohms?<br>**Yes**<br>GO to F4.<br>**No**<br>GO to F2. |
| **F2: CHECK THE ACT SENSOR RETURN LINE FOR SHORT CIRCUIT TO POWER** | |

GETtheMANUALS.org

| | |
|---|---|
| | 1 Measure the resistance between: |
| | Air charge temperature sensor - return - Pin 02 \| Positive post |
| | Is the resistance greater than 100 Kohms?<br>**Yes**<br>GO to F3.<br>**No**<br>GO to F11. |
| **F3: CHECK THE ACT SENSOR RETURN LINE FOR OPEN CIRCUIT** | |
| | 1 Key off. |
| | 2 ECM connector disconnected. |
| | 3 Measure the resistance between: |
| | Air charge temperature sensor - return - Pin 02 \| Air charge temperature sensor - return - Pin C-G3 |
| | Is the resistance less than 10 ohms?<br>**Yes**<br>Suspect:- ECM connector- ECM<br>**No**<br>REPAIR the open circuit. For additional information, refer to the wiring diagrams. |
| **F4: CHECK THE ACT VOLTAGE** | |
| | 1 Measure the voltage between: |
| | Air charge temperature sensor - signal - Pin 01 \| Negative post |
| | Is the voltage between 4.8 volts - 5.2 volts?<br>**Yes**<br>GO to F8.<br>**No**<br>GO to F5. |
| **F5: CHECK THE ACT SIGNAL LINE FOR SHORT CIRCUIT TO GROUND** | |
| | 1 Measure the resistance between: |
| | Air charge temperature sensor - signal - Pin 01 \| Negative post |
| | Is the resistance greater than 100 Kohms?<br>**Yes**<br>GO to F6.<br>**No**<br>GO to F9. |
| **F6: CHECK THE ACT SIGNAL LINE FOR SHORT CIRCUIT TO POWER** | |
| | 1 Measure the resistance between: |
| | Air charge temperature sensor - signal - Pin 01 \| Positive post |
| | Is the resistance greater than 100 Kohms?<br>**Yes**<br>GO to F7.<br>**No**<br>GO to F12. |
| **F7: CHECK THE ACT SIGNAL LINE FOR OPEN CIRCUIT** | |
| | 1 Key off. |
| | 2 ECM connector disconnected. |
| | 3 Measure the resistance between: |
| | Air charge temperature sensor - signal - Pin 01 \| Air charge temperature sensor - signal - Pin C-B1 |
| | Is the resistance less than 10 ohms?<br>**Yes**<br>Suspect:- ECM connector- ECM<br>**No**<br>REPAIR the open circuit. For additional information, refer to the wiring diagrams. |
| **F8: CHECK THE COMPONENT RESISTANCE** | |
| | 1 Measure the resistance between: |
| | Air charge temperature sensor - signal - Pin 01 \| Air charge temperature sensor - return - Pin 02 |
| | Is the resistance between 578 ohms - 71 Kohms?<br>**Yes**<br>An intermittent fault may be present in the wiring harness. Visually check for chaffed wires or other physical damage to the harness. If no fault is found in the circuit, suspect the following component(s):- ACT connector.- ACT sensor.- ECM connector.- ECM<br>**No**<br>INSTALL a new ACT. |
| **F9: CHECK THE ACT CIRCUIT(S) FOR SIGNAL AND RETURN LINES SHORTED TOGETHER** | |
| | 1 Key off. |
| | 2 ECM connector disconnected. |
| | 3 Measure the resistance between: |
| | Air charge temperature sensor - signal - Pin 01 \| Air charge temperature sensor - return - Pin 02 |
| | Is the resistance greater than 100 Kohms?<br>**Yes**<br>GO to F10.<br>**No**<br>REPAIR the short circuit. For additional information, refer to the wiring diagrams. |
| **F10: CHECK WHETHER THE SHORT CIRCUIT TO GROUND IS IN THE ACT HARNESS OR ECU** | |
| | 1 Key on, engine off. |
| | 2 Measure the resistance between: |
| | Air charge temperature sensor - signal - Pin 01 \| Negative post |
| | Is the resistance greater than 100 Kohms?<br>**Yes**<br>Suspect:- ECM<br>**No**<br>REPAIR the short circuit. For additional information, refer to the wiring diagrams. |
| **F11: CHECK WHETHER THE SHORT CIRCUIT TO POWER IS IN THE ACT HARNESS OR ECU** | |
| | 1 Key off. |
| | 2 ECM connector disconnected. |
| | 3 Key on, engine off. |

GETtheMANUALS.org

| | | |
|---|---|---|
| | 4 Measure the resistance between: | |
| | Air charge temperature sensor - return - Pin 02 | Positive post |
| | Is the resistance greater than 100 Kohms?<br>**Yes**<br>Suspect: - ECM<br>**No**<br>REPAIR the short circuit. For additional information, refer to the wiring diagrams. | |
| **F12: CHECK WHETHER THE SHORT CIRCUIT TO POWER IS IN THE ACT HARNESS OR ECU** | | |
| | 1 Key off. | |
| | 2 ECM connector disconnected. | |
| | 3 Key on, engine off. | |
| | 4 Measure the resistance between: | |
| | Air charge temperature sensor - signal - Pin 01 | Positive post |
| | Is the resistance greater than 100 Kohms?<br>**Yes**<br>Suspect: - ECM<br>**No**<br>REPAIR the short circuit. For additional information, refer to the wiring diagrams. | |

## Inspection and Verification

**This pinpoint test is intended to diagnose the following:**

- Short circuit to GROUND in the knock sensor 1 (KS1) circuit
- Short circuit to POWER in the knock sensor 1 (KS1) circuit
- Open circuit in the knock sensor 1 (KS1) circuit
- Knock sensor 1 (KS1)
- ECM

Knock sensor 1 (KS1) connector

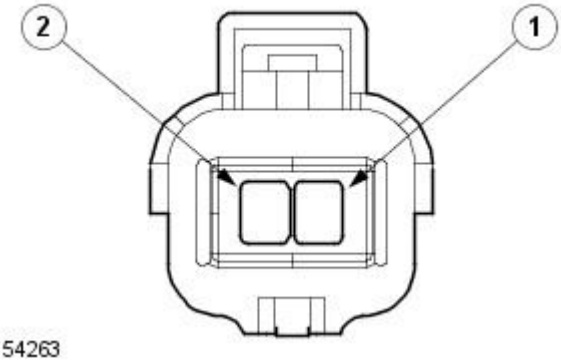


E54263

| | |
|---|---|
| Knock sensor 1 - negative | 02 |
| Knock sensor 1 - positive | 01 |

Engine control module (ECM) connector

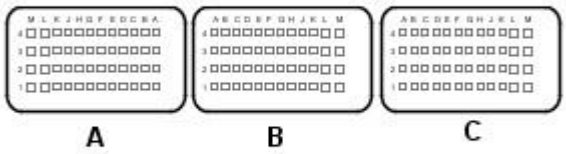


E54251

| | |
|---|---|
| Knock sensor 1 - negative | B-D4 |
| Knock sensor 1 - positive | B-E4 |

## Pinpoint Tests

| **PINPOINT TEST G : KNOCK SENSOR (KS) 1** | | |
|---|---|---|
| **TEST CONDITIONS** | **DETAILS/RESULTS/ACTIONS** | |
| **G1: CHECK THE KS1 CIRCUIT(S) FOR SHORT CIRCUIT TO GROUND IN HARNESS** | | |
| | 1 Key off. | |
| | 2 KS1 connector disconnected. | |
| | 3 ECM connector disconnected. | |
| | 4 Measure the resistance between: | |
| | Knock sensor 1 - positive - Pin 01 | Negative post |
| | Knock sensor 1 - negative - Pin 02 | Negative post |
| | Are the resistances greater than 100 Kohms?<br>**Yes**<br>GO to G2.<br>**No** | |

GETtheMANUALS.org

| | |
|---|---|
| | REPAIR the short circuit. For additional information, refer to the wiring diagrams. |
| **G2: CHECK THE KS1 CIRCUIT(S) FOR SHORT CIRCUIT TO POWER** | |
| | 1 Key on, engine off. |
| | 2 Measure the resistance between: |
| | Knock sensor 1 - positive - Pin 01 — Positive post |
| | Knock sensor 1 - negative - Pin 02 — Positive post |
| | Are the resistances greater than 100 Kohms?<br>**Yes**<br>GO to G3.<br>**No**<br>REPAIR the short circuit. For additional information, refer to the wiring diagrams. |
| **G3: CHECK WHETHER THE KS1 CIRCUIT(S) SIGNAL AND RETURN LINES ARE SHORTED TOGETHER** | |
| | 1 Measure the resistance between: |
| | Knock sensor 1 - positive. - Pin 1 — Knock sensor 1 - negative. - Pin 2 |
| | Is the resistance greater than 100 Kohms?<br>**Yes**<br>GO to G4.<br>**No**<br>REPAIR the short circuit. For additional information, refer to the wiring diagrams. |
| **G4: CHECK THE KS1 CIRCUIT(S) FOR OPEN CIRCUIT IN HARNESS** | |
| | 1 Measure the resistance between: |
| | Knock sensor 1 - positive - Pin 01 — Knock sensor 1 - positive - Pin B-E4 |
| | Knock sensor 1 - negative - Pin 02 — Knock sensor 1 - negative - Pin B-D4 |
| | Are the resistances less than 10 ohms?<br>**Yes**<br>An intermittent fault may be present in the wiring harness. Visually check for chaffed wires or other physical damage to the harness. If no fault is found in the circuit, suspect the following component(s):- KS1 connector- KS1 sensor- ECM connector- ECM<br>**No**<br>REPAIR the open circuit. For additional information, refer to the wiring diagrams. |

## Inspection and Verification

**This pinpoint test is intended to diagnose the following:**

- Short circuit to GROUND in the knock sensor 2 (KS2) circuit
- Short circuit to POWER in the knock sensor 2 (KS2) circuit
- Open circuit in the knock sensor 2 (KS2) circuit
- Knock sensor 2 (KS2)
- ECM

Knock sensor 2 (KS2) Connector

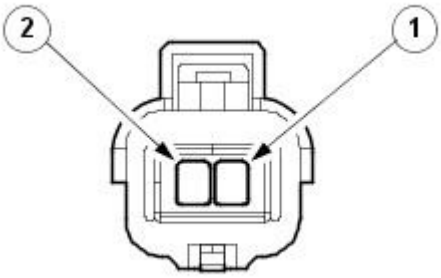


E54264

| | |
|---|---|
| Knock sensor 2 - negative | 02 |
| Knock sensor 2 - positive | 01 |

Engine control module. (ECM) Connector

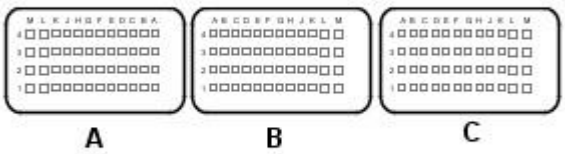


E54251

| | |
|---|---|
| Knock sensor 2 - negative | B-C4 |
| Knock sensor 2 - positive | B-D3 |

## Pinpoint Tests

| **PINPOINT TEST H : KNOCK SENSOR (KS) 2** | |
|---|---|
| **TEST CONDITIONS** | **DETAILS/RESULTS/ACTIONS** |

GETtheMANUALS.org

| H1: CHECK THE KS2 CIRCUIT(S) FOR SHORT CIRCUIT TO GROUND IN HARNESS | |
|---|---|
| | 1 Key off. |
| | 2 KS1 connector disconnected. |
| | 3 ECM connector disconnected. |
| | 4 Measure the resistance between: |
| | Knock sensor 2 - positive - Pin 01 / Negative post |
| | Knock sensor 2 - negative - Pin 02 / Negative post |
| | Are the resistances greater than 100 Kohms?<br>**Yes**<br>GO to H2.<br>**No**<br>REPAIR the short circuit. For additional information, refer to the wiring diagrams. |
| **H2: CHECK THE KS2 CIRCUIT(S) FOR SHORT CIRCUIT TO POWER** | |
| | 1 Key on, engine off. |
| | 2 Measure the resistance between: |
| | Knock sensor 2 - positive - Pin 01 / Positive post |
| | Knock sensor 2 - negative - Pin 02 / Positive post |
| | Are the resistances greater than 100 Kohms?<br>**Yes**<br>GO to H3.<br>**No**<br>REPAIR the short circuit. For additional information, refer to the wiring diagrams. |
| **H3: CHECK WHETHER THE KS2 CIRCUIT(S) SIGNAL AND RETURN LINES ARE SHORTED TOGETHER** | |
| | 1 Measure the resistance between: |
| | Knock sensor 2 - positive - Pin 01 / Knock sensor 2 - negative - Pin 02 |
| | Is the resistance greater than 100 Kohms?<br>**Yes**<br>GO to H4.<br>**No**<br>REPAIR the short circuit. For additional information, refer to the wiring diagrams. |
| **H4: CHECK THE KS2 CIRCUIT(S) FOR OPEN IN HARNESS** | |
| | 1 Measure the resistance between: |
| | Knock sensor 2 - positive - Pin 01 / Knock sensor 2 - positive - Pin B-D3 |
| | Knock sensor 2 - negative - Pin 02 / Knock sensor 2 - negative - Pin B-C4 |
| | Are the resistances less than 10 ohms?<br>**Yes**<br>An intermittent fault may be present in the wiring harness. Visually check for chaffed wires or other physical damage to the harness. If no fault is found in the circuit, suspect the following component(s):- KS2 connector.- KS2 sensor.- ECM connector.- ECM<br>**No**<br>REPAIR the open circuit. For additional information, refer to the wiring diagrams. |

## Inspection and Verification

Note

**This pinpoint test is intended to diagnose the following:**

- Short circuit to GROUND in the intake air temperature (IAT) sensor circuit
- Short circuit to POWER in the intake air temperature (IAT) sensor circuit
- Open circuit in the intake air temperature (IAT) sensor circuit
- Mass air flow sensor 1 (MAF1)
- ECM

Mass air flow sensor 1 (MAF1) connector

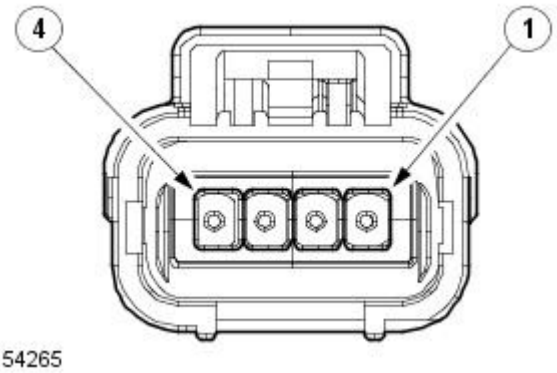


| | |
|---|---|
| Intake air temperature bank 1 - signal | 02 |
| Intake air temperature bank 1 - return | 03 |

Engine control module (ECM) connector

GETtheMANUALS.org

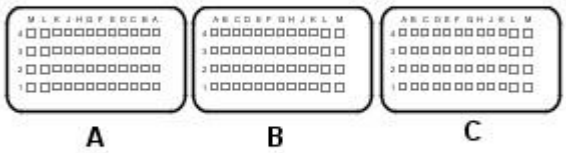


E54251

| | |
|---|---|
| Intake air temperature bank 1 - return | C1-L4 |
| Intake air temperature bank 1 - signal | C1-F1 |
| Mass air flow sensor - return | A1-L4 |

**Intake air temperature sensor characteristics**

| Resistance (ohms) | Temperature (degrees C) | Temperature (degrees F) | Volts |
|---|---|---|---|
| 44373 | -40 | -40 | 4.7844 |
| 25572 | -30 | -22 | 4.6373 |
| 15141 | -20 | -04 | 4.4166 |
| 9202 | -10 | 14 | 4.1073 |
| 5774 | 0 | 32 | 3.7137 |
| 3714 | 10 | 50 | 3.2499 |
| 2448 | 20 | 68 | 2.7518 |
| 1671 | 30 | 86 | 2.2759 |
| 1150 | 40 | 104 | 1.8254 |
| 816.5 | 50 | 122 | 1.4497 |
| 583.1 | 60 | 140 | 1.1287 |
| 426.1 | 70 | 158 | 0.8792 |
| 315.8 | 80 | 176 | 0.6818 |
| 238.1 | 90 | 194 | 0.5319 |
| 182.8 | 100 | 212 | 0.4187 |
| 141.2 | 110 | 230 | 0.3297 |
| 110.3 | 120 | 248 | 0.2613 |
| 87.45 | 130 | 266 | 0.2095 |

## Pinpoint Tests

| PINPOINT TEST I : INTAKE AIR TEMPERATURE (IAT) SENSOR | |
|---|---|
| **TEST CONDITIONS** | **DETAILS/RESULTS/ACTIONS** |
| **I1: CHECK THE IAT PID VALUE** | |
| | 1 Please ensure the engine is cold. |
| | 2 Key on, engine off. |
| | 3 Access the ECM-Intake air temperature PID using a scan tool. |
| | Is the IAT reading as expected for the current environmental and engine conditions?<br>**Yes**<br>GO to I2.<br>**No**<br>GO to I5. |
| **I2: CHECK THE IAT PID VALUE AT INCREASED RPM** | |
| | 1 Key on, engine run. |
| | 2 Access the ECM-Intake air temperature PID using a scan tool. |
| | 3 Slowly increase the engine speed to 4,000 rpm while monitoring the IAT. |
| | Did the IAT reading rise smoothly?<br>**Yes**<br>No fault found.<br>**No**<br>GO to I3. |
| **I3: CHECK FOR INTERMITTENT FAULT CONDITIONS** | |
| | 1 |
| | Were there any sudden or unexpected changes in the IAT readings?<br>**Yes**<br>KEY OFF.GO to I4.<br>**No**<br>GO to I5. |
| **I4: CHECK THE IAT PID VALUE** | |
| | 1 Key on, engine off. |
| | 2 Access the ECM-Intake air temperature PID using a scan tool. |
| | 3 Check the IAT harness wiring and connectors for loose connections and water ingress. Monitoring the temperature readings for sudden changes, while handling the harness and connectors, may help in isolation of these types of fault. |
| | Did you identify any loose connections or water ingress in IAT harness wiring and connectors?<br>**Yes**<br>REPAIR the fault as necessary.<br>**No**<br>GO to I5. |
| **I5: CHECK THE IAT SENSOR RETURN LINE** | |
| | 1 Key off. |
| | 2 MAF1 connector disconnected. |
| | 3 Key on, engine off. |

GETtheMANUALS.org

| | |
|---|---|
| | 4 Measure the resistance between: |
| | Intake air temperature bank 1 - return - Pin 03 \| Negative post |
| | Is the resistance less than 10 ohms?<br>**Yes**<br>GO to I8.<br>**No**<br>GO to I6. |
| **I6: CHECK THE IAT SENSOR RETURN LINE FOR SHORT CIRCUIT TO POWER** | |
| | 1 Measure the resistance between: |
| | Intake air temperature bank 1 - return - Pin 03 \| Positive post |
| | Is the resistance greater than 100 Kohms?<br>**Yes**<br>GO to I7.<br>**No**<br>GO to I15. |
| **I7: CHECK THE IAT SENSOR RETURN LINE FOR OPEN CIRCUIT** | |
| | 1 Key off. |
| | 2 ECM connector disconnected. |
| | 3 Measure the resistance between: |
| | Intake air temperature bank 1 - return - Pin 03 \| Mass air flow sensor - return - Pin A1-L4 |
| | Is the resistance less than 10 ohms?<br>**Yes**<br>Suspect:- ECM connector- ECM<br>**No**<br>REPAIR the open circuit. For additional information, refer to the wiring diagrams. |
| **I8: CHECK THE IAT VOLTAGE** | |
| | 1 Measure the voltage between: |
| | Intake air temperature bank 1 - signal - Pin 02 \| Negative post |
| | Is the voltage between 4.8 volts - 5.2 volts?<br>**Yes**<br>GO to I12.<br>**No**<br>GO to I9. |
| **I9: CHECK THE IAT SIGNAL LINE FOR SHORT CIRCUIT TO GROUND** | |
| | 1 Measure the resistance between: |
| | Intake air temperature bank 1 - signal - Pin 02 \| Negative post |
| | Is the resistance greater than 100 Kohms?<br>**Yes**<br>GO to I10.<br>**No**<br>GO to I13. |
| **I10: CHECK THE IAT SIGNAL LINE FOR SHORT CIRCUIT TO POWER** | |
| | 1 Key on, engine off. |
| | 2 Measure the resistance between: |
| | Intake air temperature bank 1 - signal - Pin 02 \| Positive post |
| | Is the resistance greater than 100 Kohms?<br>**Yes**<br>GO to I11.<br>**No**<br>GO to I16. |
| **I11: CHECK THE IAT SIGNAL LINE FOR OPEN CIRCUIT** | |
| | 1 Measure the resistance between: |
| | Intake air temperature bank 1 - signal - Pin 02 \| Intake air temperature bank 1 - signal - Pin C1-F1 |
| | Is the resistance less than 10 ohms?<br>**Yes**<br>Suspect:- ECM connector- ECM<br>**No**<br>REPAIR the open circuit. For additional information, refer to the wiring diagrams. |
| **I12: CHECK THE COMPONENT RESISTANCE** | |
| | 1 Measure the resistance between: |
| | Intake air temperature bank 1 - signal - Pin 02 \| Intake air temperature bank 1 - return - Pin 03 |
| | Is the resistance between 150 ohms - 15 Kohms?<br>**Yes**<br>An intermittent fault may be present in the wiring harness. Visually check for chaffed wires or other physical damage to the harness. If no fault is found in the circuit, suspect the following component(s):- MAF1 connector- MAF1 sensor- ECM connector- ECM<br>**No**<br>INSTALL a new MAF1.<br>REFER to: Mass Air Flow (MAF) Sensor (303-14C Electronic Engine Controls - 2.7L V6 - TdV6, Removal and Installation). |
| **I13: CHECK WHETHER THE IAT CIRCUIT(S) SIGNAL AND RETURN LINES ARE SHORTED TOGETHER** | |
| | 1 Key off. |
| | 2 ECM connector disconnected. |
| | 3 Key on, engine off. |
| | 4 Measure the resistance between: |
| | Intake air temperature bank 1 - signal - Pin 02 \| Intake air temperature bank 1 - return - Pin 03 |
| | Is the resistance greater than 100 Kohms?<br>**Yes**<br>GO to I14.<br>**No**<br>REPAIR the short circuit. For additional information, refer to the wiring diagrams. |
| **I14: CHECK WHETHER THE SHORT CIRCUIT TO GROUND IS IN THE IAT HARNESS OR ECU** | |
| | 1 Measure the resistance between: |
| | Intake air temperature bank 1 - signal - Pin 02 \| Negative post |

GETtheMANUALS.org

| | |
|---|---|
| | Is the resistance greater than 100 Kohms?<br>**Yes**<br>Suspect:- ECM<br>**No**<br>REPAIR the short circuit. For additional information, refer to the wiring diagrams. |
| **I15: CHECK WHETHER THE SHORT TO POWER IS IN THE IAT HARNESS OR ECU** | |
| | 1 Key off. |
| | 2 ECM connector disconnected. |
| | 3 Key on, engine off. |
| | 4 Measure the resistance between: |
| | Intake air temperature bank 1 - return - Pin 03 / Positive post |
| | Is the resistance greater than 100 Kohms?<br>**Yes**<br>Suspect:- ECM<br>**No**<br>REPAIR the short circuit. For additional information, refer to the wiring diagrams. |
| **I16: CHECK WHETHER THE SHORT CIRCUIT TO POWER IS IN THE IAT HARNESS OR ECU** | |
| | 1 Key off. |
| | 2 ECM connector disconnected. |
| | 3 Key on, engine off. |
| | 4 Measure the resistance between: |
| | Intake air temperature bank 1 - signal - Pin 02 / Positive post |
| | Is the resistance greater than 100 Kohms?<br>**Yes**<br>Suspect:- ECM<br>**No**<br>REPAIR the short circuit. For additional information, refer to the wiring diagrams. |

## Inspection and Verification

Note

**This pinpoint test is intended to diagnose the following:**

- Short circuit to GROUND in the mass air flow sensor 1 (MAF1) circuit
- Short circuit to POWER in the mass air flow sensor 1 (MAF1) circuit
- Open circuit in the mass air flow sensor 1 (MAF1) circuit
- Mass air flow sensor 1 (MAF1)
- ECM

Mass air flow sensor 1 (MAF1) connector

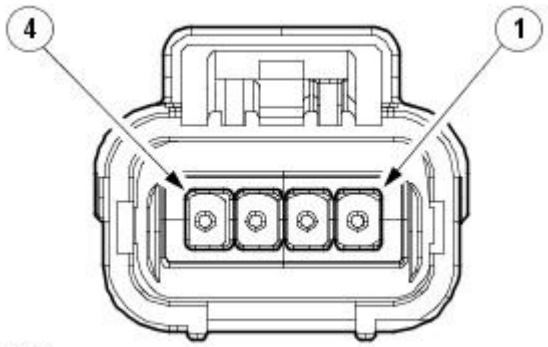


E54265

| | |
|---|---|
| Mass air flow sensor - signal | 01 |
| Mass air flow sensor - return | 03 |
| ECM relay controlled 12 volt supply | 04 |

Engine control module (ECM) connector

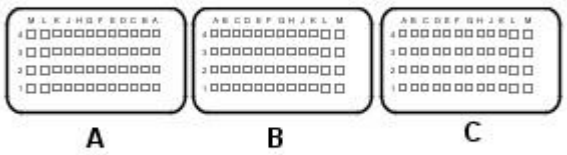


E54251

| | |
|---|---|
| Mass air flow sensor - signal | A1-F4 |
| Mass air flow sensor - return | A1-L4 |

## Pinpoint Tests

| **PINPOINT TEST J : MASS AIR FLOW METER (MAF) 1** | |
|---|---|
| **TEST CONDITIONS** | **DETAILS/RESULTS/ACTIONS** |

GETtheMANUALS.org

**J1: CHECK THE MAF1 PID VALUE**

1. Key on, engine run.
2. Access the ECM-Mass air flow sensor A signal frequency PID using a scan tool.

Is the Hot$MAF between 4 g/sec - 18 g/sec?

**Yes**
No fault found.

**No**
GO to J2.

**J2: CHECK THE MAF1 PID VALUE**

1. Access the ECM-Mass air flow sensor A signal frequency PID using a scan tool.

Is the Hot$MAF less than 4 g/sec?

**Yes**
GO to J4.

**No**
GO to J3.

**J3: CHECK FOR SECONDARY AIR LEAKS**

1. Key off.
2. Please check for air leaks between the turbo and the MAF1.
   REFER to: Intake Air Distribution and Filtering (303-12C Intake Air Distribution and Filtering - 2.7L V6 - TdV6, Diagnosis and Testing).

Are there any air leaks?

**Yes**
REPAIR the fault as necessary

**No**
GO to J5.

**J4: CHECK FOR OIL INGESTION**

1. Key off.
2. Please check for oil ingestion through the engine manifold.

Is there any oil ingestion?

**Yes**
Repair / replace the MAF1.Check/rectify any external oil leaks.

**No**
GO to J5.

**J5: CHECK THE COMPONENT RESISTANCE**

1. MAF1 connector disconnected.
2. Measure the resistance between:

| | |
|---|---|
| ECM relay controlled 12 volt supply - Pin 04 | Mass air flow sensor - return - Pin 03 |

Is the resistance between 120 Kohms - 130 Kohms?

**Yes**
GO to J6.

**No**
INSTALL a new MAF sensor.
REFER to: Mass Air Flow (MAF) Sensor (303-14C Electronic Engine Controls - 2.7L V6 - TdV6, Removal and Installation).

**J6: CHECK THE MAF1 CIRCUIT VOLTAGE**

1. Key on, engine off.
2. Measure the voltage between:

| | |
|---|---|
| ECM relay controlled 12 volt supply - Pin 04 | Negative post |

Is the voltage between 9 volts - 15 volts?

**Yes**
GO to J7.

**No**
No power to the MAF circuit. Check and repair the circuit as necessary.

**J7: CHECK THE MAF1 CIRCUIT FOR SHORT CIRCUIT TO GROUND IN THE HARNESS**

1. Key off.
2. ECM connector disconnected.
3. Key on, engine off.
4. Measure the resistance between:

| | |
|---|---|
| Mass air flow sensor - return - Pin 03 | Negative post |
| Mass air flow sensor - signal - Pin 01 | Negative post |

Are the resistances greater than 100 Kohms?

**Yes**
GO to J8.

**No**
REPAIR the short circuit. For additional information, refer to the wiring diagrams.

**J8: CHECK THE MAF1 CIRCUIT FOR SHORT CIRCUIT TO POWER IN HARNESS**

1. Measure the resistance between:

| | |
|---|---|
| Mass air flow sensor - return - Pin 03 | Positive post |
| Mass air flow sensor - signal - Pin 01 | Positive post |

Are the resistances greater than 100 Kohms?

**Yes**
GO to J9.

**No**
REPAIR the short circuit. For additional information, refer to the wiring diagrams.

**J9: CHECK FOR SHORT CIRCUIT BETWEEN SENSOR LINES**

1. Measure the resistance between:

| | |
|---|---|
| Mass air flow sensor - signal - Pin 01 | Mass air flow sensor - return - Pin 03 |

Is the resistance greater than 100 Kohms?

**Yes**
GO to J10.

**No**
REPAIR the short circuit. For additional information, refer to the wiring diagrams.

**J10: CHECK MAF1 CIRCUIT FOR AN OPEN CIRCUIT IN THE HARNESS**

1. Key off.
2. ECM connector disconnected.

GETtheMANUALS.org

| | |
|---|---|
| | 3 Measure the resistance between: |
| | Mass air flow sensor - return - Pin 03 / Mass air flow sensor - return - Pin A1-L4 |
| | Mass air flow sensor - signal - Pin 01 / Mass air flow sensor - signal - Pin A1-F4 |
| | Are the resistances less than 10 ohms?<br>**Yes**<br>An intermittent fault may be present in the wiring harness. Visually check for chaffed wires or other physical damage to the harness. If no fault is found in the circuit, suspect the following component(s):- MAF connector- ECM connector- MAF- ECM<br>**No**<br>REPAIR the open circuit. For additional information, refer to the wiring diagrams. |

## Inspection and Verification

**This pinpoint test is intended to diagnose the following:**

- Short circuit to GROUND in the mass air flow sensor 2 (MAF2) circuit
- Short circuit to POWER in the mass air flow sensor 2 (MAF2) circuit
- Open circuit in the mass air flow sensor 2 (MAF2) circuit
- Mass air flow sensor 2 (MAF2)
- ECM

Mass air flow sensor 2 (MAF2) connector

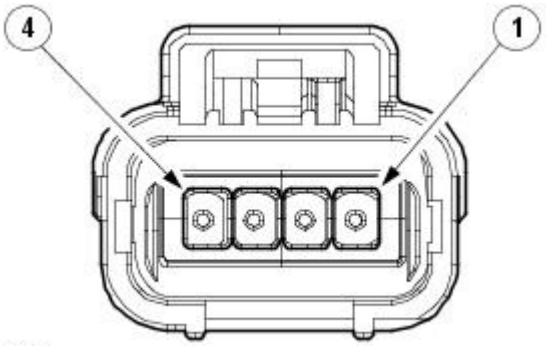


E54265

| | |
|---|---|
| Mass air flow sensor 2 - signal | 01 |
| Mass air flow sensor 2 - return | 03 |
| ECM relay controlled 12 volt supply | 04 |

Engine control module (ECM) connector

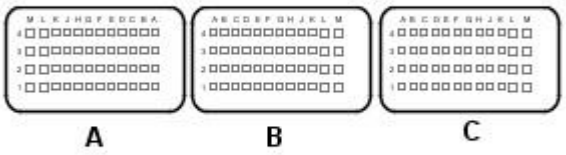


E54251

| | |
|---|---|
| Mass air flow sensor - return | A1-L4 |
| Mass air flow sensor 2 - signal | A1-G4 |

## Pinpoint Tests

| PINPOINT TEST K : MASS AIR FLOW METER (MAF) 2 | |
|---|---|
| **TEST CONDITIONS** | **DETAILS/RESULTS/ACTIONS** |
| **K1: CHECK THE MAF2 PID VALUE** | |
| | 1 Key on, engine run. |
| | 2 Access the ECM-Mass air flow sensor B signal frequency PID using a scan tool. |
| | Is the Hot$MAF between 4 g/sec - 18 g/sec?<br>**Yes**<br>No fault found.<br>**No**<br>GO to K2. |
| **K2: CHECK THE MAF2 PID VALUE** | |
| | 1 Access the ECM-Mass air flow sensor B signal frequency PID using a scan tool. |
| | Is the Hot$MAF less than 4 g/sec?<br>**Yes**<br>GO to K4.<br>**No**<br>GO to K3. |
| **K3: CHECK FOR SECONDARY AIR LEAKS** | |
| | 1 Key off. |
| | 2 Please check for air leaks between the turbo and the MAF2.<br>REFER to: Intake Air Distribution and Filtering (303-12C Intake Air Distribution and Filtering - 2.7L V6 - TdV6, Diagnosis and Testing). |

GETtheMANUALS.org

| | |
|---|---|
| | Are there any air leaks?<br>**Yes**<br>REPAIR the fault as necessary.<br>**No**<br>GO to K5. |
| **K4: CHECK FOR OIL INGESTION** | |
| | 1 Key off. |
| | 2 Please check for oil ingestion via the engine manifold. |
| | Is there any oil ingestion?<br>**Yes**<br>Repair / replace the MAF2.Check/rectify any external oil leaks.<br>**No**<br>GO to K5. |
| **K5: CHECK THE COMPONENT RESISTANCE** | |
| | 1 MAF2 connector disconnected. |
| | 2 Measure the resistance between: |
| | ECM relay controlled 12 volt supply - Pin 04 / Mass air flow sensor 2 - return - Pin 03 |
| | Is the resistance between 120 Kohms - 130 Kohms?<br>**Yes**<br>GO to K6.<br>**No**<br>INSTALL a new MAF sensor.<br>REFER to: Mass Air Flow (MAF) Sensor (303-14C Electronic Engine Controls - 2.7L V6 - TdV6, Removal and Installation). |
| **K6: CHECK THE MAF2 CIRCUIT VOLTAGE** | |
| | 1 Key on, engine off. |
| | 2 Measure the voltage between: |
| | ECM relay controlled 12 volt supply - Pin 04 / Negative post |
| | Is the voltage between 9 volts - 15 volts?<br>**Yes**<br>GO to K7.<br>**No**<br>No power to the MAF circuit. Check and repair the circuit as necessary. |
| **K7: CHECK THE MAF2 CIRCUIT FOR SHORT CIRCUIT TO GROUND IN THE HARNESS** | |
| | 1 Key off. |
| | 2 ECM connector disconnected. |
| | 3 Key on, engine off. |
| | 4 Measure the resistance between: |
| | Mass air flow sensor 2 - return - Pin 03 / Negative post |
| | Mass air flow sensor 2 - signal - Pin 01 / Negative post |
| | Are the resistances greater than 100 Kohms?<br>**Yes**<br>GO to K8.<br>**No**<br>REPAIR the short circuit. For additional information, refer to the wiring diagrams. |
| **K8: CHECK THE MAF2 CIRCUIT FOR SHORT CIRCUIT TO POWER IN THE HARNESS** | |
| | 1 Measure the resistance between: |
| | Mass air flow sensor 2 - return - Pin 03 / Positive post |
| | Mass air flow sensor 2 - signal - Pin 01 / Positive post |
| | Are the resistances greater than 100 Kohms?<br>**Yes**<br>GO to K9.<br>**No**<br>REPAIR the short circuit. For additional information, refer to the wiring diagrams. |
| **K9: CHECK FOR SHORT CIRCUIT BETWEEN SENSOR LINES** | |
| | 1 Measure the resistance between: |
| | Mass air flow sensor 2 - signal - Pin 01 / Mass air flow sensor 2 - return - Pin 03 |
| | Is the resistance greater than 100 Kohms?<br>**Yes**<br>GO to K10.<br>**No**<br>REPAIR the short circuit. For additional information, refer to the wiring diagrams. |
| **K10: CHECK MAF2 CIRCUIT FOR AN OPEN CIRCUIT IN THE HARNESS** | |
| | 1 Key off. |
| | 2 ECM connector disconnected. |
| | 3 Measure the resistance between: |
| | Mass air flow sensor 2 - return - Pin 03 / Mass air flow sensor 2 - signal - Pin A1-G4 |
| | Mass air flow sensor 2 - signal - Pin 01 / Mass air flow sensor 2 - signal - Pin A1-G4 |
| | Are the resistances less than 10 ohms?<br>**Yes**<br>An intermittent fault may be present in the wiring harness. Visually check for chaffed wires or other physical damage to the harness. If no fault is found in the circuit, suspect the following component(s):- MAF connector.- ECM connector.- MAF- ECM<br>**No**<br>REPAIR the open circuit. For additional information, refer to the wiring diagrams. |

## Inspection and Verification

**This pinpoint test is intended to diagnose the following:**

- Short circuit to GROUND in the manifold absolute pressure (MAP) sensor circuit
- Short circuit to POWER in the manifold absolute pressure (MAP) sensor circuit
- Open circuit in the manifold absolute pressure (MAP) sensor circuit
- Manifold absolute pressure (MAP) sensor
- ECM

GETtheMANUALS.org

Manifold absolute pressure (MAP) sensor connector

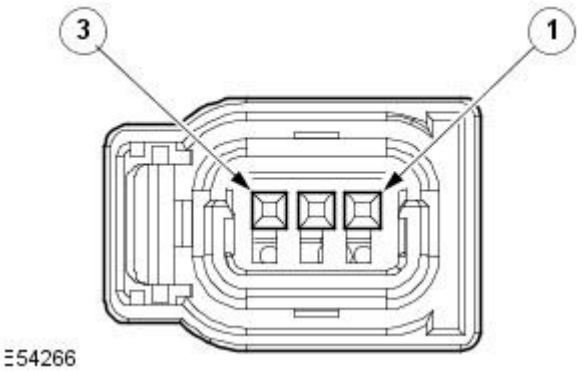


| | |
|---|---|
| Manifold absolute pressure sensor - signal | 02 |
| Manifold absolute pressure sensor - power | 01 |
| Manifold absolute pressure sensor - return | 03 |

Engine control module (ECM) connector

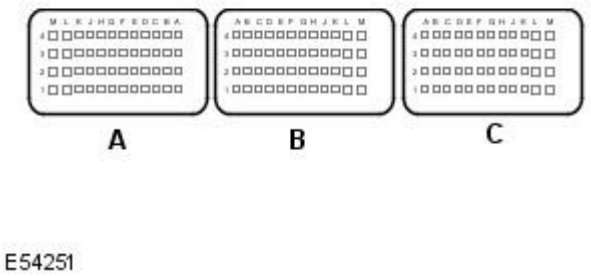


| | |
|---|---|
| Manifold absolute pressure sensor - return | C-E2 |
| Manifold absolute pressure sensor - power | C-D1 |
| Manifold absolute pressure sensor - signal | C-C1 |

## Pinpoint Tests

| PINPOINT TEST L : MANIFOLD ABSOLUTE PRESSURE (MAP) SENSOR | | |
|---|---|---|
| TEST CONDITIONS | DETAILS/RESULTS/ACTIONS | |
| **L1: CHECK THE MAP SENSOR RETURN LINE** | | |
| | 1 Key off. | |
| | 2 MAP Sensor connector disconnected. | |
| | 3 Measure the resistance between: | |
| | Manifold absolute pressure sensor - return - Pin 03 | Negative post |
| | Is the resistance less than 10 ohms?<br>**Yes**<br>GO to L2.<br>**No**<br>GO to L13. | |
| **L2: CHECK THE MAP VOLTAGE** | | |
| | 1 Key on, engine off. | |
| | 2 Measure the voltage between: | |
| | Manifold absolute pressure sensor - power - Pin 01 | Negative post |
| | Is the voltage between 4.8 volts - 5.2 volts?<br>**Yes**<br>GO to L3.<br>**No**<br>GO to L10. | |
| **L3: CHECK THE MAP SIGNAL LINE FOR SHORT CIRCUIT TO GROUND** | | |
| | 1 Measure the resistance between: | |
| | Manifold absolute pressure sensor - signal - Pin 02 | Negative post |
| | Is the resistance greater than 100 Kohms?<br>**Yes**<br>GO to L4.<br>**No**<br>GO to L7. | |
| **L4: CHECK THE MAP SIGNAL LINE FOR SHORT CIRCUIT TO POWER** | | |
| | 1 Key on, engine off. | |
| | 2 Measure the resistance between: | |
| | Manifold absolute pressure sensor - signal - Pin 02 | Positive post |
| | Is the resistance greater than 100 Kohms?<br>**Yes**<br>GO to L5.<br>**No**<br>GO to L8. | |
| **L5: CHECK THE MAP SIGNAL LINE FOR SHORT CIRCUIT TO SIGNAL RETURN AND SENSOR POWER** | | |

GETtheMANUALS.org

| | |
|---|---|
| | 1 Measure the resistance between: |
| | Manifold absolute pressure sensor - signal - Pin 02 / Manifold absolute pressure sensor - power - Pin 01 |
| | Manifold absolute pressure sensor - signal - Pin 02 / Manifold absolute pressure sensor - return - Pin 03 |
| | Are the resistances greater than 100 Kohms?<br>**Yes**<br>GO to L6.<br>**No**<br>GO to L9. |
| **L6: CHECK THE MAP SIGNAL LINE FOR OPEN CIRCUIT** | |
| | 1 Key off. |
| | 2 ECM connector disconnected. |
| | 3 Measure the resistance between: |
| | Manifold absolute pressure sensor - signal - Pin 02 / Manifold absolute pressure sensor - signal - Pin C-C1 |
| | Is the resistance less than 10 ohms?<br>**Yes**<br>An intermittent fault may be present in the wiring harness. Visually check for chaffed wires or other physical damage to the harness. If no fault is found in the circuit, suspect the following component(s):- MAP connector- MAP- ECM connector- ECM<br>**No**<br>REPAIR the open circuit. For additional information, refer to the wiring diagrams. |
| **L7: CHECK WHETHER THE SHORT CIRCUIT TO GROUND IS IN THE MAP HARNESS OR ECU** | |
| | 1 Key off. |
| | 2 ECM connector disconnected. |
| | 3 Key on, engine off. |
| | 4 Measure the resistance between: |
| | Manifold absolute pressure sensor - signal - Pin 02 / Negative post |
| | Is the resistance greater than 100 Kohms?<br>**Yes**<br>Suspect:- ECM<br>**No**<br>REPAIR the short circuit. For additional information, refer to the wiring diagrams. |
| **L8: CHECK WHETHER THE SHORT CIRCUIT TO POWER IS IN THE TMAP HARNESS OR ECU** | |
| | 1 Key off. |
| | 2 ECM connector disconnected. |
| | 3 Key on, engine off. |
| | 4 Measure the resistance between: |
| | Manifold absolute pressure sensor - signal - Pin 02 / Positive post |
| | Is the resistance greater than 100 Kohms?<br>**Yes**<br>Suspect:- ECM<br>**No**<br>REPAIR the short circuit. For additional information, refer to the wiring diagrams. |
| **L9: CHECK WHETHER THE SHORT CIRCUIT IS IN THE MAP HARNESS OR CONTROL UNIT** | |
| | 1 Key off. |
| | 2 ECM connector disconnected. |
| | 3 Measure the resistance between: |
| | Manifold absolute pressure sensor - signal - Pin 02 / Manifold absolute pressure sensor - power - Pin 01 |
| | Manifold absolute pressure sensor - signal - Pin 02 / Manifold absolute pressure sensor - return - Pin 03 |
| | Are the resistances greater than 100 Kohms?<br>**Yes**<br>Suspect:- ECM<br>**No**<br>REPAIR the short circuit. For additional information, refer to the wiring diagrams. |
| **L10: CHECK THE 5 VOLT SUPPLY LINE FOR SHORT CIRCUIT TO GROUND** | |
| | 1 Measure the resistance between: |
| | Manifold absolute pressure sensor - power - Pin 01 / Negative post |
| | Is the resistance greater than 100 Kohms?<br>**Yes**<br>GO to L11.<br>**No**<br>GO to L16. |
| **L11: CHECK THE 5 VOLT SUPPLY LINE FOR SHORT CIRCUIT TO POWER** | |
| | 1 Measure the resistance between: |
| | Manifold absolute pressure sensor - power - Pin 01 / Positive post |
| | Is the resistance greater than 100 Kohms?<br>**Yes**<br>GO to L12.<br>**No**<br>GO to L17. |
| **L12: CHECK THE MAP 5 VOLT SUPPLY LINE FOR OPEN CIRCUIT** | |
| | 1 Key off. |
| | 2 ECM connector disconnected. |
| | 3 Measure the resistance between: |
| | Manifold absolute pressure sensor - power - Pin 01 / Manifold absolute pressure sensor - power - Pin C-D1 |
| | Is the resistance less than 10 ohms?<br>**Yes**<br>Suspect :- ECM connector.- ECM<br>**No**<br>REPAIR the open circuit. For additional information, refer to the wiring diagrams. |
| **L13: CHECK THE MAP SENSOR RETURN LINE FOR SHORT CIRCUIT TO POWER** | |
| | 1 Measure the resistance between: |
| | Manifold absolute pressure sensor - return - Pin 03 / Positive post |

GETtheMANUALS.org

| | |
|---|---|
| | Is the resistance greater than 100 Kohms?<br>**Yes**<br>GO to L14.<br>**No**<br>GO to L18. |
| **L14: CHECK WHETHER THE 5 VOLT SUPPLY AND SIGNAL RETURN LINES ARE SHORTED TOGETHER** | |
| | 1 Measure the resistance between: |
| | Manifold absolute pressure sensor - power - Pin 01 / Manifold absolute pressure sensor - return - Pin 03 |
| | Is the resistance greater than 100 Kohms?<br>**Yes**<br>GO to L15.<br>**No**<br>GO to L19. |
| **L15: CHECK THE MAP SENSOR RETURN LINE FOR OPEN CIRCUIT** | |
| | 1 Key off. |
| | 2 ECM connector disconnected. |
| | 3 Key on, engine off. |
| | 4 Measure the resistance between: |
| | Manifold absolute pressure sensor - return - Pin 03 / Manifold absolute pressure sensor - return - Pin C-E2 |
| | Is the resistance less than 10 ohms?<br>**Yes**<br>Suspect :- MAP connector- ECM connector- MAP- ECM<br>**No**<br>REPAIR the open circuit. For additional information, refer to the wiring diagrams. |
| **L16: CHECK WHETHER THE SHORT CIRCUIT TO GROUND IS IN THE MAP HARNESS OR ECU** | |
| | 1 Key off. |
| | 2 ECM connector disconnected. |
| | 3 Key on, engine off. |
| | 4 Measure the resistance between: |
| | Manifold absolute pressure sensor - power - Pin 01 / Negative post |
| | Is the resistance greater than 100 Kohms?<br>**Yes**<br>Suspect:- ECM<br>**No**<br>REPAIR the short circuit. For additional information, refer to the wiring diagrams. |
| **L17: CHECK WHETHER THE SHORT CIRCUIT TO POWER IS IN THE MAP HARNESS OR ECU** | |
| | 1 Key off. |
| | 2 ECM connector disconnected. |
| | 3 Key on, engine off. |
| | 4 Measure the resistance between: |
| | Manifold absolute pressure sensor - power - Pin 01 / Positive post |
| | Is the resistance greater than 100 Kohms?<br>**Yes**<br>Suspect:- ECM<br>**No**<br>REPAIR the short circuit. For additional information, refer to the wiring diagrams. |
| **L18: CHECK WHETHER THE SHORT CIRCUIT TO POWER IS IN THE MAP HARNESS OR ECU** | |
| | 1 Key off. |
| | 2 ECM connector disconnected. |
| | 3 Key on, engine off. |
| | 4 Measure the resistance between: |
| | Manifold absolute pressure sensor - return - Pin 03 / Positive post |
| | Is the resistance greater than 100 Kohms?<br>**Yes**<br>Suspect:- ECM<br>**No**<br>REPAIR the short circuit. For additional information, refer to the wiring diagrams. |
| **L19: CHECK WHETHER THE SHORT CIRCUIT IS IN THE MAP HARNESS OR CONTROL UNIT** | |
| | 1 Key off. |
| | 2 ECM connector disconnected. |
| | 3 Measure the resistance between: |
| | Manifold absolute pressure sensor - power - Pin 01 / Manifold absolute pressure sensor - return - Pin 03 |
| | Is the resistance greater than 100 Kohms?<br>**Yes**<br>Suspect:- ECM<br>**No**<br>REPAIR the short circuit. For additional information, refer to the wiring diagrams. |

## Inspection and Verification

Note

**This pinpoint test is intended to diagnose the following:**

- Short circuit to GROUND in the air charge temperature (ACT) sensor circuit
- Short circuit to POWER in the air charge temperature (ACT) sensor circuit
- Open circuit in the air charge temperature (ACT) sensor circuit
- Air charge temperature (ACT) sensor
- ECM

Air charge temperature (ACT) connector

GETtheMANUALS.org

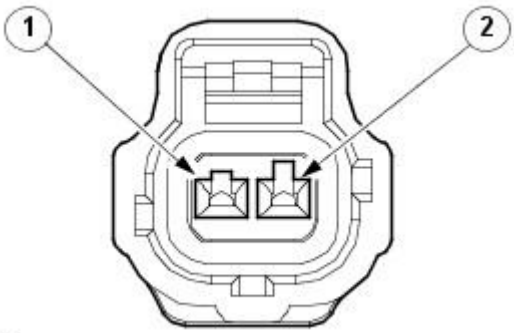


E54262

| | |
|---|---|
| Air charge temperature sensor - signal | 01 |
| Air charge temperature sensor - return | 02 |

Engine control module (ECM) connector

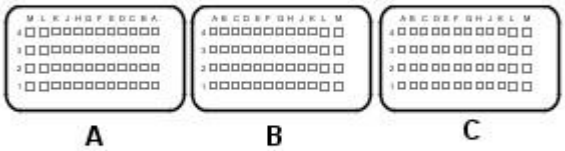


E54251

| | |
|---|---|
| Mass air flow sensor - return | A1-L4 |
| Intake air temperature bank 1 - return. | C1-L4 |
| Intake air temperature bank 1 - signal | C1-F1 |
| Air charge temperature sensor - signal | C-B1 |
| Air charge temperature sensor - return | C-G3 |

## Pinpoint Tests

| PINPOINT TEST M : INTAKE AIR TEMPERATURE (IAT) AND CHARGE AIR TEMPERATURE (ACT) SENSORS | |
|---|---|
| **TEST CONDITIONS** | **DETAILS/RESULTS/ACTIONS** |
| **M1: CHECK THE IAT PID VALUE** | |
| | 1 Please ensure the engine is cold. |
| | 2 Key on, engine off. |
| | 3 Access the ECM-Boost air temperature PID using a scan tool. |
| | Is the IAT reading as expected for the current environmental and engine conditions?<br>**Yes**<br>GO to M2.<br>**No**<br>GO to M5. |
| **M2: CHECK THE IAT PID VALUE** | |
| | 1 Key on, engine run. |
| | 2 Increase the engine speed to 4,000 rpm. |
| | 3 Access the ECM-Boost air temperature PID using a scan tool. |
| | Did the IAT reading rise smoothly?<br>**Yes**<br>No fault found.<br>**No**<br>GO to M3. |
| **M3: CHECK THE IAT PID VALUE** | |
| | 1 Key off. |
| | Were there any sudden or unexpected changes in the IAT readings?<br>**Yes**<br>GO to M4.<br>**No**<br>GO to M5. |
| **M4: CHECK THE IAT PID VALUE** | |
| | 1 Key on, engine off. |
| | 2 Access the ECM-Boost air temperature PID using a scan tool. |
| | 3 Check the IAT harness wiring and connectors for loose connections and water ingress. |
| | Does the IAT reading change while handling harness / connector?<br>**Yes**<br>REPAIR the fault as necessary.<br>**No**<br>GO to M5. |
| **M5: CHECK THE ACT SENSOR RETURN LINE** | |
| | 1 Key off. |
| | 2 ACT connector disconnected. |
| | 3 Key on, engine off. |

GETtheMANUALS.org

| | |
|---|---|
| | 4 Measure the resistance between: |
| | Air charge temperature sensor - return - Pin 02 / Negative post |
| | Is the resistance less than 10 ohms?<br>**Yes**<br>GO to M8.<br>**No**<br>GO to M6. |
| **M6: CHECK THE ACT SENSOR RETURN LINE FOR SHORT CIRCUIT TO POWER** | |
| | 1 Measure the resistance between: |
| | Air charge temperature sensor - return - Pin 02 / Positive post |
| | Is the resistance greater than 100 Kohms?<br>**Yes**<br>GO to M7.<br>**No**<br>GO to M15. |
| **M7: CHECK THE ACT SENSOR RETURN LINE FOR OPEN CIRCUIT** | |
| | 1 Key off. |
| | 2 ACT connector disconnected. |
| | 3 Measure the resistance between: |
| | Air charge temperature sensor - return - Pin 02 / Air charge temperature sensor - return - Pin C-G3 |
| | Is the resistance less than 10 ohms?<br>**Yes**<br>Suspect:- ECM connector- ECM<br>**No**<br>REPAIR the open circuit. For additional information, refer to the wiring diagrams. |
| **M8: CHECK THE ACT VOLTAGE** | |
| | 1 Measure the voltage between: |
| | Air charge temperature sensor - signal - Pin 01 / Negative post |
| | Is the voltage between 4.8 volts - 5.2 volts?<br>**Yes**<br>GO to M12.<br>**No**<br>GO to M9. |
| **M9: CHECK THE ACT SIGNAL LINE FOR SHORT CIRCUIT TO GROUND** | |
| | 1 Measure the resistance between: |
| | Air charge temperature sensor - signal - Pin 01 / Negative post |
| | Is the resistance greater than 100 Kohms?<br>**Yes**<br>GO to M10.<br>**No**<br>GO to M13. |
| **M10: CHECK THE ACT SIGNAL LINE FOR SHORT CIRCUIT TO POWER** | |
| | 1 Key on, engine off. |
| | 2 Measure the resistance between: |
| | Air charge temperature sensor - signal - Pin 01 / Positive post |
| | Is the resistance greater than 100 Kohms?<br>**Yes**<br>GO to M11.<br>**No**<br>GO to M16. |
| **M11: CHECK THE ACT SIGNAL LINE FOR OPEN CIRCUIT** | |
| | 1 Measure the resistance between: |
| | Air charge temperature sensor - signal - Pin 01 / Air charge temperature sensor - signal - Pin C-B1 |
| | Is the resistance less than 10 ohms?<br>**Yes**<br>Suspect:- ECM connector.- ECM<br>**No**<br>REPAIR the open circuit. For additional information, refer to the wiring diagrams. |
| **M12: CHECK THE COMPONENT RESISTANCE** | |
| | 1 Measure the resistance between: |
| | Air charge temperature sensor - signal - Pin 01 / Air charge temperature sensor - return - Pin 02 |
| | Is the resistance between 1 Kohms - 100 Kohms?<br>**Yes**<br>An intermittent fault may be present in the wiring harness. Visually check for chaffed wires or other physical damage to the harness. If no fault is found in the circuit, suspect the following component(s):- ACT connector- ECM connector- ECM<br>**No**<br>INSTALL a new ACT sensor. |
| **M13: CHECK THE ACT CIRCUIT(S) FOR SIGNAL AND RETURN LINES SHORTED TOGETHER** | |
| | 1 Key off. |
| | 2 ECM connector disconnected. |
| | 3 Key on, engine off. |
| | 4 Measure the resistance between: |
| | Air charge temperature sensor - signal - Pin 01 / Air charge temperature sensor - return - Pin 02 |
| | Is the resistance greater than 100 Kohms?<br>**Yes**<br>GO to M14.<br>**No**<br>REPAIR the short circuit. For additional information, refer to the wiring diagrams. |
| **M14: CHECK WHETHER THE SHORT CIRCUIT TO GROUND IS IN THE ACT HARNESS OR ECU** | |
| | 1 Measure the resistance between: |
| | Air charge temperature sensor - signal - Pin 01 / Negative post. |

GETtheMANUALS.org

| | |
|---|---|
| | Is the resistance greater than 100 Kohms?<br>**Yes**<br>Suspect:- ECM<br>**No**<br>REPAIR the short circuit. For additional information, refer to the wiring diagrams. |
| **M15: CHECK WHETHER THE SHORT CIRCUIT TO POWER IS IN THE ACT HARNESS OR ECU** | |
| | 1 Key off. |
| | 2 ECM connector disconnected. |
| | 3 Key on, engine off. |
| | 4 Measure the resistance between: |
| | Air charge temperature sensor - return - Pin 02 / Positive post |
| | Is the resistance greater than 100 Kohms?<br>**Yes**<br>Suspect:- ECM<br>**No**<br>REPAIR the short circuit. For additional information, refer to the wiring diagrams. |
| **M16: CHECK WHETHER THE SHORT CIRCUIT TO POWER IS IN THE ACT HARNESS OR ECU** | |
| | 1 Key off. |
| | 2 ECM connector disconnected. |
| | 3 Key on, engine off. |
| | 4 Measure the resistance between: |
| | Air charge temperature sensor - signal - Pin 01 / Positive post |
| | Is the resistance greater than 100 Kohms?<br>**Yes**<br>Suspect:- ECM<br>**No**<br>REPAIR the short circuit. For additional information, refer to the wiring diagrams. |

## Inspection and Verification

**This pinpoint test is intended to diagnose the following:**

- Short circuit to GROUND in the crankshaft position (CKP) sensor circuit
- Short circuit to POWER in the crankshaft position (CKP) sensor circuit
- Open circuit in the crankshaft position (CKP) sensor circuit
- Crankshaft position (CKP) sensor
- ECM

Crankshaft position (CKP) sensor connector

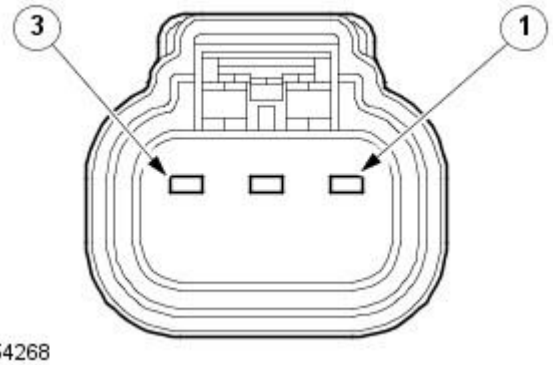


E54268

| | |
|---|---|
| Crankshaft position sensor - signal | 02 |
| Crankshaft position sensor - positive | 01 |
| Crankshaft position sensor - negative | 03 |

Engine control module (ECM) connector

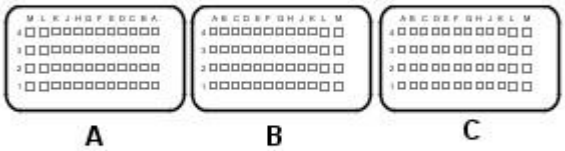


E54251

| | |
|---|---|
| Crankshaft position sensor - signal | C-F1 |
| Crankshaft position sensor - positive | C-G1 |
| Crankshaft position sensor - negative | C-G2 |

## Pinpoint Tests

| **PINPOINT TEST N : CRANKSHAFT POSITION (CKP) SENSOR** | |
|---|---|
| **TEST CONDITIONS** | **DETAILS/RESULTS/ACTIONS** |
| **N1: CHECK THE CKP FOR SHORT CIRCUIT TO GROUND** | |

GETtheMANUALS.org

| | |
|---|---|
| | 1 Key off. |
| | 2 ECM connector disconnected. |
| | 3 Key on, engine off. |
| | 4 Measure the resistance between: |
| | Crankshaft position sensor - negative - Pin C-G2 — Negative post |
| | Crankshaft position sensor - positive - Pin C-G1 — Negative post |
| | Crankshaft position sensor - signal - Pin C-F1 — Negative post |
| | Are the resistances greater than 100 Kohms?<br>**Yes**<br>GO to N2.<br>**No**<br>REPAIR the short circuit to GROUND in the CKP harness or component. |
| **N2: CHECK THE CKP CIRCUIT FOR SHORT CIRCUIT TO POWER** | |
| | 1 Measure the resistance between: |
| | Crankshaft position sensor - negative - Pin C-G2 — Positive post |
| | Crankshaft position sensor - positive - Pin C-G1 — Positive post |
| | Crankshaft position sensor - signal - Pin C-F1 — Positive post |
| | Are the resistances greater than 100 Kohms?<br>**Yes**<br>GO to N3.<br>**No**<br>REPAIR the short circuit to POWER in the CKP harness or component. |
| **N3: CHECK THE CKP CIRCUIT RESISTANCE** | |
| | 1 Measure the resistance between: |
| | Crankshaft position sensor - negative - Pin C-G2 — Crankshaft position sensor - signal - Pin C-F1 |
| | Is the resistance between 100 Kohms - 120 Kohms?<br>**Yes**<br>GO to N4.<br>**No**<br>REPAIR the out of limits resistance in the CKP harness or component. This may be due to a short or open circuit, depending on the result of the last measurement. |
| **N4: CHECK THE CKP CIRCUIT RESISTANCE** | |
| | 1 Measure the resistance between: |
| | Crankshaft position sensor - positive - Pin C-G1 — Crankshaft position sensor - signal - Pin C-F1 |
| | Crankshaft position sensor - positive - Pin C-G1 — Crankshaft position sensor - negative - Pin C-G2 |
| | Are the resistances greater than 100 Kohms?<br>**Yes**<br>No fault found in the tests. However the following may be suspect:- Open circuit in sensor power line- CKP connector- CKP sensor- Crank target wheel- ECM connector- ECM<br>**No**<br>REPAIR the out of limits resistance in the CKP harness or component. This may be due to a short or open circuit, depending on the result of the last measurement. |

## Inspection and Verification

**This pinpoint test is intended to diagnose the following:**

- Short circuit to GROUND in the camshaft position (CMP) sensor circuit
- Short circuit to POWER in the camshaft position (CMP) sensor circuit
- Open circuit in the camshaft position (CMP) sensor circuit
- Camshaft position sensor
- ECM

Engine control module (ECM) connector

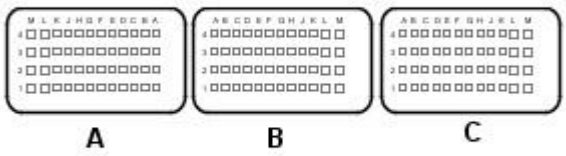


E54251

| | |
|---|---|
| Camshaft position sensor - return | C-H3 |
| Camshaft position sensor - power | C-H4 |
| Camshaft position sensor - signal | C-G4 |

Camshaft position sensor bank 1 (CMP1) connector

GETtheMANUALS.org

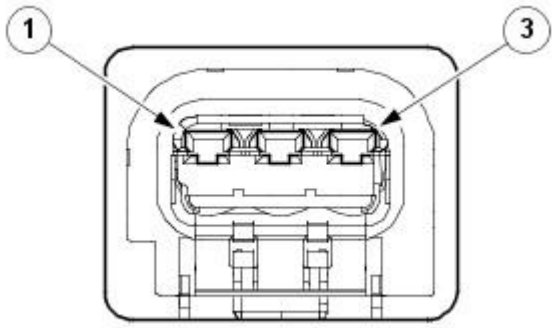


E54269

| | |
|---|---|
| Camshaft position sensor - signal | 01 |
| Camshaft position sensor - return | 02 |
| Camshaft position sensor - power | 03 |

## Pinpoint Tests

| PINPOINT TEST O : CAMSHAFT POSITION (CMP) SENSOR | | |
|---|---|---|
| TEST CONDITIONS | DETAILS/RESULTS/ACTIONS | |
| **O1: CHECK THE CMP FOR SHORT CIRCUIT TO GROUND** | | |
| | 1 Key off. | |
| | 2 ECM connector disconnected. | |
| | 3 Key on, engine off. | |
| | 4 Measure the resistance between: | |
| | Camshaft position sensor - signal - Pin C-G4 | Negative post |
| | Camshaft position sensor - power - Pin C-H4 | Negative post |
| | Camshaft position sensor - return - Pin C-H3 | Negative post |
| | Are the resistances greater than 100 Kohms?<br>**Yes**<br>GO to O2.<br>**No**<br>REPAIR the short circuit to GROUND in the CMP harness or component. | |
| **O2: CHECK THE CMP CIRCUIT FOR SHORT CIRCUIT TO POWER** | | |
| | 1 Measure the resistance between: | |
| | Camshaft position sensor - signal - Pin C-G4 | Positive post |
| | Camshaft position sensor - power - Pin C-H4 | Positive post |
| | Camshaft position sensor - return - Pin C-H3 | Positive post |
| | Are the resistances greater than 100 Kohms?<br>**Yes**<br>GO to O3.<br>**No**<br>REPAIR the short circuit to POWER in the CMP harness or component. | |
| **O3: CHECK THE CMP CIRCUIT RESISTANCE** | | |
| | 1 Measure the resistance between: | |
| | Camshaft position sensor - signal - Pin C-G4 | Camshaft position sensor - return - Pin C-H3 |
| | Is the resistance between 100 Kohms - 120 Kohms?<br>**Yes**<br>GO to O4.<br>**No**<br>REPAIR the out of limits resistance in the CMP harness or component. This may be due to a short or open circuit, depending on the result of the last measurement. | |
| **O4: CHECK THE CMP CIRCUIT RESISTANCE** | | |
| | 1 Measure the resistance between: | |
| | Camshaft position sensor - power - Pin C-H4 | Camshaft position sensor - signal - Pin C-G4 |
| | Camshaft position sensor - power - Pin C-H4 | Camshaft position sensor 2 - return |
| | Are the resistances greater than 100 Kohms?<br>**Yes**<br>No fault found in the tests. However the following may be suspect:- Open circuit in sensor power line- CMP connector- CMP sensor- ECM connector- ECM<br>**No**<br>REPAIR the out of limits resistance in the CMP harness or component. This may be due to a short or open circuit, depending on the result of the last measurement. | |

## Inspection and Verification

**This pinpoint test is intended to diagnose the following:**

- Short circuit to GROUND in the Crankshaft position (CKP) sensor circuit
- Short circuit to GROUND in the camshaft position (CMP) sensor circuit
- Short circuit to POWER in the crankshaft position (CKP) sensor circuit
- Short circuit to POWER in the camshaft position (CMP) sensor circuit
- Open circuit in the crankshaft position (CKP) sensor circuit
- Open circuit in the camshaft position (CMP) sensor circuit
- Crankshaft position sensor
- Camshaft position sensor
- ECM

Crankshaft position (CKP) sensor connector

GETtheMANUALS.org

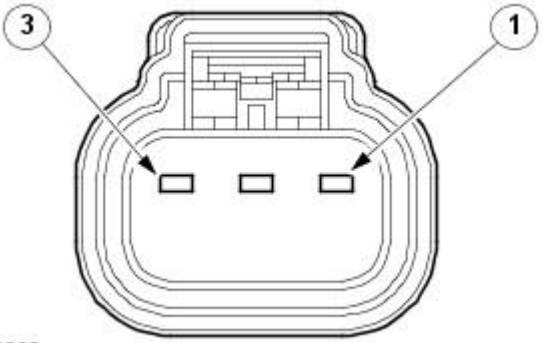


E54268

| | |
|---|---|
| Crankshaft position sensor - signal | 02 |
| Crankshaft position sensor - positive | 01 |
| Crankshaft position sensor - negative | 03 |

Camshaft position sensor bank 1 (CMP1) connector

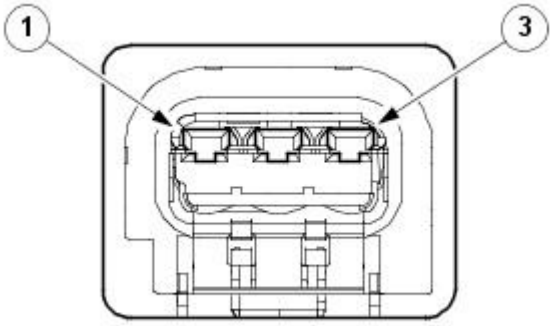


E54269

| | |
|---|---|
| Camshaft position sensor - signal | 01 |
| Camshaft position sensor - power | 03 |
| Camshaft position sensor - return | 02 |

Engine control module (ECM) connector

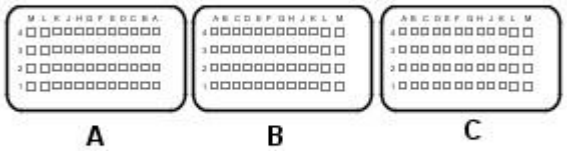


E54251

| | |
|---|---|
| Camshaft position sensor - signal | C-G4 |
| Camshaft position sensor - return | C-H3 |
| Camshaft position sensor - power | C-H4 |
| Crankshaft position sensor - signal | C-F1 |
| Crankshaft position sensor - positive | C-G1 |
| Crankshaft position sensor - negative | C-G2 |

## Pinpoint Tests

| PINPOINT TEST P : CRANKSHAFT (CKP) AND CAMSHAFT (CMP) POSITION SENSORS | | |
|---|---|---|
| **TEST CONDITIONS** | **DETAILS/RESULTS/ACTIONS** | |
| **P1: CHECK THE CKP FOR SHORT CIRUIT TO GROUND** | | |
| | 1 Key off. | |
| | 2 ECM connector disconnected. | |
| | 3 Key on, engine off. | |
| | 4 Measure the resistance between: | |
| | Crankshaft position sensor - negative - Pin C-G2 | Negative post |
| | Crankshaft position sensor - positive - Pin C-G1 | Negative post |
| | Crankshaft position sensor - signal - Pin C-F1 | Negative post |
| | Are the resistances greater than 100 Kohms?<br>**Yes**<br>GO to P2.<br>**No**<br>REPAIR the short circuit to GROUND in the CKP harness or component. | |
| **P2: CHECK THE CKP CIRCUIT FOR SHORT CIRCUIT TO POWER** | | |

GETtheMANUALS.org

| | |
|---|---|
| | 1 Measure the resistance between: |
| | Crankshaft position sensor - negative - Pin C-G2 — Positive post |
| | Crankshaft position sensor - positive - Pin C-G1 — Positive post |
| | Crankshaft position sensor - signal - Pin C-F1 — Positive post |
| | Are the resistances greater than 100 Kohms?<br>**Yes**<br>GO to P3.<br>**No**<br>REPAIR the short circuit to GROUND in the CKP harness or component. |
| **P3: CHECK THE CKP CIRCUIT RESISTANCE** | |
| | 1 Measure the resistance between: |
| | Crankshaft position sensor - signal - Pin C-F1 — Crankshaft position sensor - negative - Pin C-G2 |
| | Is the resistance between 100 Kohms - 120 Kohms?<br>**Yes**<br>GO to P4.<br>**No**<br>REPAIR the out of limits resistance in the CKP harness or component. This may be due to a short or open circuit, depending on the result of the last measurement. |
| **P4: CHECK THE CKP CIRCUIT RESISTANCE** | |
| | 1 Measure the resistance between: |
| | Crankshaft position sensor - positive - Pin C-G1 — Crankshaft position sensor - signal - Pin C-F1 |
| | Crankshaft position sensor - positive - Pin C-G1 — Crankshaft position sensor - negative - Pin C-G2 |
| | Are the resistances greater than 100 Kohms?<br>**Yes**<br>GO to P5.<br>**No**<br>REPAIR the out of limits resistance in the CKP harness or component. This may be due to a short or open circuit, depending on the result of the last measurement. |
| **P5: CHECK THE CMP FOR SHORT CIRCUIT TO GROUND** | |
| | 1 Measure the resistance between: |
| | Camshaft position sensor - power - Pin C-H4 — Negative post |
| | Camshaft position sensor - return - Pin C-H3 — Negative post |
| | Camshaft position sensor - signal - Pin C-G4 — Negative post |
| | Are the resistances greater than 100 Kohms?<br>**Yes**<br>GO to P6.<br>**No**<br>REPAIR the short circuit to GROUND in the CMP harness or component. |
| **P6: CHECK CMP CIRCUIT FOR SHORT CIRCUIT TO POWER** | |
| | 1 Measure the resistance between: |
| | Camshaft position sensor - power - Pin C-H4 — Positive post |
| | Camshaft position sensor - return - Pin C-H3 — Positive post |
| | Camshaft position sensor - signal - Pin C-G4 — Positive post |
| | Are the resistances greater than 100 Kohms?<br>**Yes**<br>GO to P7.<br>**No**<br>REPAIR the short circuit to POWER in the CMP harness or component. |
| **P7: CHECK THE CMP CIRCUIT RESISTANCE** | |
| | 1 Measure the resistance between: |
| | Camshaft position sensor - return - Pin C-H3 — Camshaft position sensor - signal - Pin C-G4 |
| | Is the resistance between 100 Kohms - 120 Kohms?<br>**Yes**<br>GO to P8.<br>**No**<br>REPAIR the out of limits resistance in the CMP harness or component. This may be due to a short or open circuit, depending on the result of the last measurement. |
| **P8: CHECK THE CMP CIRCUIT RESISTANCE** | |
| | 1 Measure the resistance between: |
| | Camshaft position sensor - power - Pin C-H4 — Camshaft position sensor - signal - Pin C-G4 |
| | Camshaft position sensor - power - Pin C-H4 — Camshaft position sensor 2 - return |
| | Are the resistances greater than 100 Kohms?<br>**Yes**<br>No fault found in the tests. However the following may be suspect:- Open circuit in sensor power line- CMP connector- CKP connector- CMP sensor- CKP sensor- Crank target wheel- ECM connector- ECM<br>**No**<br>REPAIR the out of limits resistance in the CMP harness or component. This may be due to a short or open circuit, depending on the result of the last measurement. |

## Inspection and Verification

**This pinpoint test is intended to diagnose the following:**

- Short circuit to GROUND in the accelerator pedal position (APP1) sensor circuit
- Short circuit to GROUND in the accelerator pedal position (APP2) sensor circuit
- Short circuit to POWER in the accelerator pedal position (APP1) sensor circuit
- Short circuit to POWER in the accelerator pedal position (APP2) sensor circuit
- Open circuit in the accelerator pedal position (APP1) sensor circuit
- Open circuit in the accelerator pedal position (APP2) sensor circuit
- Accelerator pedal position sensor 1
- Accelerator pedal position sensor 2
- ECM

Accelerator pedal position (APP) sensor connector

GETtheMANUALS.org

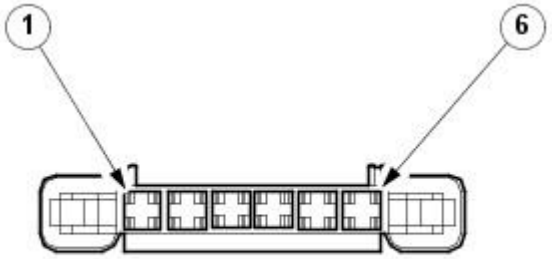


E54270

| | |
|---|---|
| Accelerator pedal position sensor 2 - signal | 01 |
| Accelerator pedal position sensor 2 - power | 02 |
| Accelerator pedal position sensor 2 - return | 06 |
| Accelerator pedal position sensor 1 - signal | 04 |
| Accelerator pedal position sensor 1 - power | 05 |
| Accelerator pedal position sensor 1 - return | 03 |

Engine control module (ECM) connector

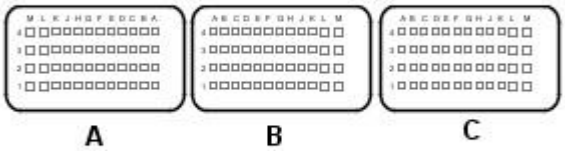


E54251

| | |
|---|---|
| Accelerator pedal position sensor 2 - return | A-B2 |
| Accelerator pedal position sensor 2 - power | A-D2 |
| Accelerator pedal position sensor 2 - signal | A-C2 |
| Accelerator pedal position sensor 1 - return | A-C1 |
| Accelerator pedal position sensor 1 - power | A-E1 |
| Accelerator pedal position sensor 1 - signal | A-D1 |

## Pinpoint Tests

| PINPOINT TEST Q : ACCELERATOR PEDAL POSITION (APP) SENSORS 1 AND 2 | |
|---|---|
| **TEST CONDITIONS** | **DETAILS/RESULTS/ACTIONS** |
| **Q1: CHECK THE APP1 VALUE, WITH THE ACCELERATOR PEDAL RELEASED** | |
| | 1 Key on, engine off. |
| | 2 Ensure the accelerator pedal is released. |
| | 3 Access the ECM-Pedal position sensor 1 (voltage) PID using a scan tool. |
| | Is the voltage between 0 volts - 1 volts?<br>**Yes**<br>GO to Q2.<br>**No**<br>GO to Q5. |
| **Q2: CHECK THE APP2 VALUE, WITH THE ACCELERATOR PEDAL RELEASED** | |
| | 1 Ensure the accelerator pedal is released. |
| | 2 Access the ECM-Pedal position sensor 2 (voltage) PID using a scan tool. |
| | Is the voltage between 3 volts - 5 volts?<br>**Yes**<br>GO to Q3.<br>**No**<br>GO to Q25. |
| **Q3: CHECK THE APP1 VALUE, WITH THE ACCELERATOR FULLY DEPRESSED** | |
| | 1 Ensure the accelerator pedal is fully depressed. |
| | 2 Access the ECM-Pedal position sensor 1 (voltage) PID using a scan tool. |
| | Is the voltage between 2.2 volts - 2.7 volts?<br>**Yes**<br>GO to Q4.<br>**No**<br>GO to Q5. |
| **Q4: CHECK THE APP2 VALUE, WITH THE ACCELERATOR FULLY DEPRESSED** | |
| | 1 Ensure the accelerator pedal is fully depressed. |
| | 2 Access the ECM-Pedal position sensor 2 (voltage) PID using a scan tool. |
| | Is the voltage between 2.2 volts - 2.7 volts?<br>**Yes**<br>No fault found.<br>**No**<br>GO to Q25. |
| **Q5: CHECK THE APP1 SENSOR RETURN LINE** | |

GETtheMANUALS.org

| | |
|---|---|
| | 1 Key off. |
| | 2 APP Sensor connector disconnected. |
| | 3 Key on, engine off. |
| | 4 Measure the resistance between: |
| | Accelerator pedal position sensor 1 - return - Pin 03 / Negative post |
| | Is the resistance less than 10 ohms?<br>**Yes**<br>GO to Q6.<br>**No**<br>GO to Q23. |
| **Q6: CHECK THE APP1 VOLTAGE** | |
| | 1 Measure the voltage between: |
| | Accelerator pedal position sensor 1 - power - Pin 05 / Negative post |
| | Is the voltage between 4.8 volts - 5.2 volts?<br>**Yes**<br>GO to Q7.<br>**No**<br>GO to Q15. |
| **Q7: CHECK THE APP1 SIGNAL LINE FOR SHORT CIRCUIT TO GROUND** | |
| | 1 Measure the resistance between: |
| | Accelerator pedal position sensor 1 - signal - Pin 04 / Negative post |
| | Is the resistance greater than 100 Kohms?<br>**Yes**<br>GO to Q8.<br>**No**<br>GO to Q11. |
| **Q8: CHECK THE APP1 SIGNAL LINE FOR SHORT CIRCUIT TO POWER** | |
| | 1 Measure the resistance between: |
| | Accelerator pedal position sensor 1 - signal - Pin 04 / Positive post |
| | Is the resistance greater than 100 Kohms?<br>**Yes**<br>GO to Q9.<br>**No**<br>GO to Q13. |
| **Q9: CHECK FOR SHORT CIRCUIT BETWEEN THE APP1 SIGNAL AND POWER LINES** | |
| | 1 Measure the resistance between: |
| | Accelerator pedal position sensor 1 - signal - Pin 04 / Accelerator pedal position sensor 1 - power - Pin 05 |
| | Accelerator pedal position sensor 1 - signal - Pin 04 / Accelerator pedal position sensor 1 - return - Pin 03 |
| | Are the resistances greater than 100 Kohms?<br>**Yes**<br>GO to Q10.<br>**No**<br>GO to Q14. |
| **Q10: CHECK THE APP1 SIGNAL LINE FOR OPEN CIRCUIT** | |
| | 1 Key off. |
| | 2 ECM connector disconnected. |
| | 3 Measure the resistance between: |
| | Accelerator pedal position sensor 1 - signal - Pin 04 / Accelerator pedal position sensor 1 - signal - Pin A-D1 |
| | Is the resistance less than 10 ohms?<br>**Yes**<br>An intermittent fault may be present in the wiring harness. Visually check for chaffed wires or other physical damage to the harness. If no fault is found in the circuit, suspect the following component(s):- APP connector- APP sensor- ECM connector- ECM<br>**No**<br>REPAIR the open circuit. For additional information, refer to the wiring diagrams. |
| **Q11: CHECK THE APP1 CIRCUIT(S) FOR SIGNAL AND RETURN LINES SHORTED TOGETHER** | |
| | 1 Key off. |
| | 2 ECM connector disconnected. |
| | 3 Key on, engine off. |
| | 4 Measure the resistance between: |
| | Accelerator pedal position sensor 1 - signal - Pin 04 / Accelerator pedal position sensor 1 - return - Pin 03 |
| | Is the resistance greater than 100 Kohms?<br>**Yes**<br>GO to Q12.<br>**No**<br>REPAIR the short circuit. For additional information, refer to the wiring diagrams. |
| **Q12: CHECK WHETHER THE SHORT CIRCUIT TO GROUND IS IN THE APP1 HARNESS OR ECU** | |
| | 1 Measure the resistance between: |
| | Accelerator pedal position sensor 1 - signal - Pin 04 / Negative post |
| | Is the resistance greater than 100 Kohms?<br>**Yes**<br>Suspect:- ECM<br>**No**<br>REPAIR the short circuit. For additional information, refer to the wiring diagrams. |
| **Q13: CHECK WHETHER THE SHORT CIRCUIT TO POWER IS IN THE APP1 HARNESS OR ECU** | |
| | 1 Key off. |
| | 2 ECM connector disconnected. |
| | 3 Key on, engine off. |
| | 4 Measure the resistance between: |
| | Accelerator pedal position sensor 1 - signal - Pin 04 / Positive post |
| | Is the resistance greater than 100 Kohms?<br>**Yes**<br>Suspect:- ECM<br>**No** |

GETtheMANUALS.org

REPAIR the short circuit. For additional information, refer to the wiring diagrams.

**Q14: CHECK WHETHER THE SHORT CIRCUIT IS IN THE APP1 HARNESS OR CONTROL UNIT**

1. Key off.
2. ECM connector disconnected.
3. Key on, engine off.
4. Measure the resistance between:

| | |
|---|---|
| Accelerator pedal position sensor 1 - signal - Pin 04 | Accelerator pedal position sensor 1 - power - Pin 05 |
| Accelerator pedal position sensor 1 - signal - Pin 04 | Accelerator pedal position sensor 1 - return - Pin 03 |

Are the resistances greater than 100 Kohms?

**Yes**

Suspect:- ECM

**No**

REPAIR the short circuit. For additional information, refer to the wiring diagrams.

**Q15: CHECK THE 5 VOLT SUPPLY LINE FOR SHORT CIRCUIT TO GROUND**

1. Measure the resistance between:

| | |
|---|---|
| Accelerator pedal position sensor 1 - power - Pin 05 | Negative post |

Is the resistance greater than 100 Kohms?

**Yes**

GO to Q16.

**No**

GO to Q20.

**Q16: CHECK THE 5 VOLT SUPPLY LINE FOR SHORT CIRCUIT TO POWER**

1. Measure the resistance between:

| | |
|---|---|
| Accelerator pedal position sensor 1 - power - Pin 05 | Positive post |

Is the resistance greater than 100 Kohms?

**Yes**

GO to Q17.

**No**

GO to Q22.

**Q17: CHECK THE APP1 5 VOLT SUPPLY LINE FOR OPEN CIRCUIT**

1. Key off.
2. ECM connector disconnected.
3. Measure the resistance between:

| | |
|---|---|
| Accelerator pedal position sensor 1 - power - Pin 05 | Accelerator pedal position sensor 1 - power - Pin A-E1 |

Is the resistance less than 10 ohms?

**Yes**

Suspect :- ECM connector.- ECM

**No**

REPAIR the open circuit. For additional information, refer to the wiring diagrams.

**Q18: CHECK WHETHER THE 5 VOLT SUPPLY AND SIGNAL RETURN LINES ARE SHORTED TOGETHER**

1. Key off.
2. ECM connector disconnected.
3. Key on, engine off.
4. Measure the resistance between:

| | |
|---|---|
| Accelerator pedal position sensor 1 - power - Pin 05 | Accelerator pedal position sensor 1 - return - Pin 03 |

Is the resistance greater than 100 Kohms?

**Yes**

GO to Q19.

**No**

REPAIR the short circuit. For additional information, refer to the wiring diagrams.

**Q19: CHECK THE APP1 SENSOR RETURN LINE FOR OPEN CIRCUIT**

1. Measure the resistance between:

| | |
|---|---|
| Accelerator pedal position sensor 1 - return - Pin 03 | Accelerator pedal position sensor 1 - return - Pin A-C1 |

Is the resistance less than 10 ohms?

**Yes**

Suspect :- ECM connector.- ECM

**No**

REPAIR the open circuit. For additional information, refer to the wiring diagrams.

**Q20: CHECK WHETHER THE 5 VOLT SUPPLY AND SIGNAL RETURN LINES ARE SHORTED TOGETHER**

1. Key off.
2. ECM connector disconnected.
3. Key on, engine off.
4. Measure the resistance between:

| | |
|---|---|
| Accelerator pedal position sensor 1 - power - Pin 05 | Accelerator pedal position sensor 1 - return - Pin 03 |

Is the resistance greater than 100 Kohms?

**Yes**

GO to Q21.

**No**

REPAIR the short circuit. For additional information, refer to the wiring diagrams.

**Q21: CHECK WHETHER THE SHORT CIRCUIT TO GROUND IS IN THE APP1 HARNESS OR ECU**

1. Measure the resistance between:

| | |
|---|---|
| Accelerator pedal position sensor 1 - power - Pin 05 | Negative post |

Is the resistance greater than 100 Kohms?

**Yes**

Suspect:- ECM

**No**

REPAIR the short circuit. For additional information, refer to the wiring diagrams.

**Q22: CHECK WHETHER THE SHORT CIRCUIT TO POWER IS IN THE APP1 HARNESS OR ECU**

1. Key off.
2. ECM connector disconnected.
3. Key on, engine off.
4. Measure the resistance between:

| | |
|---|---|
| Accelerator pedal position sensor 1 - power - Pin 05 | Positive post |

GETtheMANUALS.org

Is the resistance greater than 100 Kohms?
**Yes**
Suspect:- ECM
**No**
REPAIR the short circuit. For additional information, refer to the wiring diagrams.

**Q23: CHECK THE APP1 SENSOR RETURN LINE FOR SHORT CIRCUIT TO POWER**

1 Measure the resistance between:

| | |
|---|---|
| Accelerator pedal position sensor 1 - return - Pin 03 | Positive post |

Is the resistance greater than 100 Kohms?
**Yes**
GO to Q18.
**No**
GO to Q24.

**Q24: CHECK WHETHER THE SHORT CIRCUIT TO POWER IS IN THE APP1 HARNESS OR ECU**

1 Key off.
2 ECM connector disconnected.
3 Key on, engine off.
4 Measure the resistance between:

| | |
|---|---|
| Accelerator pedal position sensor 1 - return - Pin 03 | Positive post |

Is the resistance greater than 100 Kohms?
**Yes**
Suspect:- ECM
**No**
REPAIR the short circuit. For additional information, refer to the wiring diagrams.

**Q25: CHECK THE APP2 SENSOR RETURN LINE**

1 Key off.
2 APP Sensor connector disconnected.
3 Key on, engine off.
4 Measure the resistance between:

| | |
|---|---|
| Accelerator pedal position sensor 2 - return - Pin 06 | Negative post |

Is the resistance less than 10 ohms?
**Yes**
GO to Q26.
**No**
GO to Q38.

**Q26: CHECK THE APP2 VOLTAGE**

1 Measure the voltage between:

| | |
|---|---|
| Accelerator pedal position sensor 2 - power - Pin 02 | Negative post |

Is the voltage between 4.8 volts - 5.2 volts?
**Yes**
GO to Q27.
**No**
GO to Q35.

**Q27: CHECK THE APP2 SIGNAL LINE FOR SHORT CIRCUIT TO GROUND**

1 Measure the resistance between:

| | |
|---|---|
| Accelerator pedal position sensor 2 - signal- Pin 01 | Negative post |

Is the resistance greater than 100 Kohms?
**Yes**
GO to Q28.
**No**
GO to Q31.

**Q28: CHECK THE APP2 SIGNAL LINE FOR SHORT CIRCUIT TO POWER**

1 Measure the resistance between:

| | |
|---|---|
| Accelerator pedal position sensor 2 - signal - Pin 01 | Positive post |

Is the resistance greater than 100 Kohms?
**Yes**
GO to Q29.
**No**
GO to Q33.

**Q29: CHECK FOR SHORT CIRCUIT BETWEEN THE APP2 SIGNAL AND THE POWER LINE**

1 Measure the resistance between:

| | |
|---|---|
| Accelerator pedal position sensor 2 - signal - Pin 01 | Accelerator pedal position sensor 2 - power - Pin 02 |
| Accelerator pedal position sensor 2 - signal - Pin 01 | Accelerator pedal position sensor 2 - return - Pin 06 |

Are the resistances greater than 100 Kohms?
**Yes**
GO to Q30.
**No**
GO to Q34.

**Q30: CHECK THE APP2 SIGNAL LINE FOR OPEN CIRCUIT**

1 Key off.
2 ECM connector disconnected.
3 Measure the resistance between:

| | |
|---|---|
| Accelerator pedal position sensor 2 - signal - Pin 01 | Accelerator pedal position sensor 2 - signal - Pin A-C2 |

Is the resistance less than 10 ohms?
**Yes**
An intermittent fault may be present in the wiring harness. Visually check for chaffed wires or other physical damage to the harness. If no fault is found in the circuit, suspect the following component(s):- APP connector- APP sensor- ECM connector- ECM
**No**
REPAIR the open circuit. For additional information, refer to the wiring diagrams.

**Q31: CHECK THE APP2 CIRCUIT(S) FOR SIGNAL AND RETURN LINES SHORTED TOGETHER**

1 Key off.
2 ECM connector disconnected.
3 Key on, engine off.

GETtheMANUALS.org

| | |
|---|---|
| | 4 Measure the resistance between: |
| | Accelerator pedal position sensor 2 - signal - Pin 01 / Accelerator pedal position sensor 2 - return - Pin 06 |
| | Is the resistance greater than 100 Kohms?<br>**Yes**<br>GO to Q32.<br>**No**<br>REPAIR the short circuit. For additional information, refer to the wiring diagrams. |
| **Q32: CHECK WHETHER THE SHORT CIRCUIT TO GROUND IS IN THE APP2 HARNESS OR ECU** | |
| | 1 Measure the resistance between: |
| | Accelerator pedal position sensor 2 - signal - Pin 01 / Negative post |
| | Is the resistance greater than 100 Kohms?<br>**Yes**<br>Suspect:- ECM<br>**No**<br>REPAIR the short circuit. For additional information, refer to the wiring diagrams. |
| **Q33: CHECK WHETHER THE SHORT CIRCUIT TO POWER IS IN THE APP2 HARNESS OR ECU** | |
| | 1 Key off. |
| | 2 ECM connector disconnected. |
| | 3 Key on, engine off. |
| | 4 Measure the resistance between: |
| | Accelerator pedal position sensor 2 - signal - Pin 01 / Positive post |
| | Is the resistance greater than 100 Kohms?<br>**Yes**<br>Suspect:- ECM<br>**No**<br>REPAIR the short circuit. For additional information, refer to the wiring diagrams. |
| **Q34: CHECK WHETHER THE SHORT CIRCUIT IS IN THE APP2 HARNESS OR CONTROL UNIT** | |
| | 1 Key off. |
| | 2 ECM connector disconnected. |
| | 3 Measure the resistance between: |
| | Accelerator pedal position sensor 2 - signal - Pin 01 / Accelerator pedal position sensor 2 - power - Pin 02 |
| | Accelerator pedal position sensor 2 - signal - Pin 01 / Accelerator pedal position sensor 2 - return - Pin 06 |
| | Are the resistances greater than 100 Kohms?<br>**Yes**<br>Suspect:- ECM<br>**No**<br>REPAIR the short circuit. For additional information, refer to the wiring diagrams. |
| **Q35: CHECK THE 5 VOLT SUPPLY LINE FOR SHORT CIRCUIT TO GROUND** | |
| | 1 Measure the resistance between: |
| | Accelerator pedal position sensor 2 - power - Pin 02 / Negative post |
| | Is the resistance greater than 100 Kohms?<br>**Yes**<br>GO to Q36.<br>**No**<br>GO to Q41. |
| **Q36: CHECK THE 5 VOLT SUPPLY LINE FOR SHORT CIRCUIT TO POWER** | |
| | 1 Measure the resistance between: |
| | Accelerator pedal position sensor 2 - power - Pin 02 / Positive post |
| | Is the resistance greater than 100 Kohms?<br>**Yes**<br>GO to Q37.<br>**No**<br>GO to Q43. |
| **Q37: CHECK THE APP2 5 VOLT SUPPLY LINE FOR OPEN CIRCUIT** | |
| | 1 Key off. |
| | 2 ECM connector disconnected. |
| | 3 Measure the resistance between: |
| | Accelerator pedal position sensor 2 - power - Pin 02 / Accelerator pedal position sensor 2 - power - Pin A-D2 |
| | Is the resistance less than 10 ohms?<br>**Yes**<br>Suspect :- ECM connector- ECM<br>**No**<br>REPAIR the open circuit. For additional information, refer to the wiring diagrams. |
| **Q38: CHECK THE APP2 SENSOR RETURN LINE FOR SHORT CIRCUIT TO POWER** | |
| | 1 Measure the resistance between: |
| | Accelerator pedal position sensor 2 - return - Pin 06 / Positive post |
| | Is the resistance greater than 100 Kohms?<br>**Yes**<br>GO to Q39.<br>**No**<br>GO to Q44. |
| **Q39: CHECK WHETHER THE 5 VOLT SUPPLY AND SIGNAL RETURN LINES ARE SHORTED TOGETHER** | |
| | 1 Key off. |
| | 2 ECM connector disconnected. |
| | 3 Key on, engine off. |
| | 4 Measure the resistance between: |
| | Accelerator pedal position sensor 2 - return - Pin 06 / Accelerator pedal position sensor 2 - power - Pin 02 |
| | Is the resistance greater than 100 Kohms?<br>**Yes**<br>GO to Q40.<br>**No**<br>REPAIR the short circuit. For additional information, refer to the wiring diagrams. |
| **Q40: CHECK THE APP2 SENSOR RETURN LINE FOR OPEN CIRCUIT** | |

SERVICEMANUALS.org

| | |
|---|---|
| | 1 Measure the resistance between: |
| | Accelerator pedal position sensor 2 - return - Pin 06 / Accelerator pedal position sensor 2 - return - Pin A-B2 |
| | Is the resistance less than 10 ohms?<br>**Yes**<br>Suspect :- ECM connector- ECM<br>**No**<br>REPAIR the open circuit. For additional information, refer to the wiring diagrams. |
| **Q41: CHECK WHETHER THE 5 VOLT SUPPLY AND SIGNAL RETURN LINES ARE SHORTED TOGETHER** | |
| | 1 Key off. |
| | 2 ECM connector disconnected. |
| | 3 Measure the resistance between: |
| | Accelerator pedal position sensor 2 - power - Pin 02 / Accelerator pedal position sensor 2 - return - Pin 06 |
| | Is the resistance greater than 100 Kohms?<br>**Yes**<br>GO to Q42.<br>**No**<br>REPAIR the short circuit. For additional information, refer to the wiring diagrams. |
| **Q42: CHECK WHETHER THE SHORT CIRCUIT TO GROUND IS IN THE APP2 HARNESS OR ECU** | |
| | 1 Measure the resistance between: |
| | Accelerator pedal position sensor 2 - power - Pin 02 / Negative post |
| | Is the resistance greater than 100 Kohms?<br>**Yes**<br>Suspect:- ECM<br>**No**<br>REPAIR the short circuit. For additional information, refer to the wiring diagrams. |
| **Q43: CHECK WHETHER THE SHORT CIRCUIT TO POWER IS IN THE APP2 HARNESS OR ECU** | |
| | 1 Key off. |
| | 2 ECM connector disconnected. |
| | 3 Key on, engine off. |
| | 4 Measure the resistance between: |
| | Accelerator pedal position sensor 2 - power - Pin 02 / Positive post |
| | Is the resistance greater than 100 Kohms?<br>**Yes**<br>Suspect:- ECM<br>**No**<br>REPAIR the short circuit. For additional information, refer to the wiring diagrams. |
| **Q44: CHECK WHETHER THE SHORT CIRCUIT TO POWER IS IN THE APP2 HARNESS OR ECU** | |
| | 1 Key off. |
| | 2 ECM connector disconnected. |
| | 3 Key on, engine off. |
| | 4 Measure the resistance between: |
| | Accelerator pedal position sensor 2 - return - Pin 06 / Positive post |
| | Is the resistance greater than 100 Kohms?<br>**Yes**<br>Suspect:- ECM<br>**No**<br>REPAIR the short circuit. For additional information, refer to the wiring diagrams. |

## Inspection and Verification

**This pinpoint test is intended to diagnose the following:**

- Short circuit to GROUND in the manifold absolute pressure (MAP) sensor circuit
- Short circuit to POWER in the manifold absolute pressure (MAP) sensor circuit
- Open circuit in the manifold absolute pressure (MAP) sensor circuit
- Manifold absolute pressure sensor
- ECM

Manifold absolute pressure (MAP) sensor connector

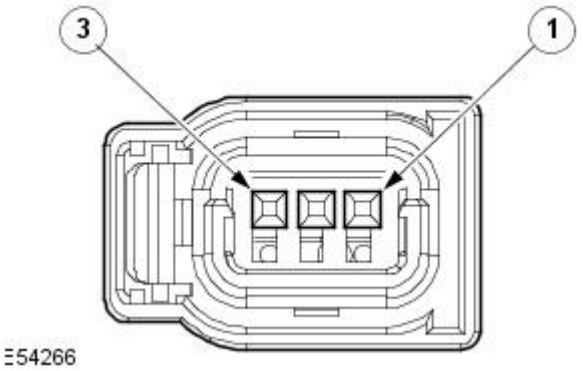


| | |
|---|---|
| Manifold absolute pressure sensor - signal | 02 |
| Manifold absolute pressure sensor - power | 01 |
| Manifold absolute pressure sensor - return | 03 |

Engine control module (ECM) connector

GETtheMANUALS.org

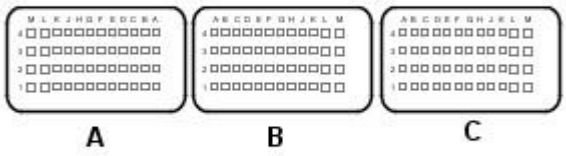


E54251

| | |
|---|---|
| Manifold absolute pressure sensor - return | C-E2 |
| Manifold absolute pressure sensor - power | C-D1 |
| Manifold absolute pressure sensor - signal | C-C1 |

## Pinpoint Tests

| PINPOINT TEST R : MANIFOLD ABSOLUTE PRESSURE (MAP) SENSOR | |
|---|---|
| **TEST CONDITIONS** | **DETAILS/RESULTS/ACTIONS** |
| **R1: CHECK THE MAP SENSOR CONNECTOR FOR PHYSICAL DAMAGE OR CORROSION** | |
| | 1 Inspect the sensor for damage, correct fitment, connection, etc. |
| | Is the sensor correctly installed and in good condition?<br>**Yes**<br>GO to R2.<br>**No**<br>CHECK and rectify as necessary.<br>REFER to: Manifold Absolute Pressure (MAP) Sensor (303-14C Electronic Engine Controls - 2.7L V6 - TdV6, Removal and Installation). |
| **R2: CHECK THE MAP PID VALUE** | |
| | 1 Key on, engine run. |
| | 2 Access the OBDII-Intake Manifold Absolute Pressure PID using a scan tool. |
| | 3 Slowly increase the engine speed to 1,500 rpm while monitoring the PID. |
| | Did the pressure increase smoothly as the engine speed was increased?<br>**Yes**<br>No fault found.<br>**No**<br>GO to R3. |
| **R3: CHECK THE MAP SENSOR RETURN LINE** | |
| | 1 Key off. |
| | 2 MAP Sensor connector disconnected. |
| | 3 Measure the resistance between: |
| | Manifold absolute pressure sensor - return - Pin 03 — Negative post |
| | Is the resistance less than 10 ohms?<br>**Yes**<br>GO to R4.<br>**No**<br>GO to R15. |
| **R4: CHECK THE MAP VOLTAGE** | |
| | 1 Key on, engine off. |
| | 2 Measure the voltage between: |
| | Manifold absolute pressure sensor - power - Pin 01 — Negative post |
| | Is the voltage between 4.8 volts - 5.2 volts?<br>**Yes**<br>GO to R5.<br>**No**<br>GO to R12. |
| **R5: CHECK THE MAP SIGNAL LINE FOR SHORT CIRCUIT TO GROUND** | |
| | 1 Measure the resistance between: |
| | Manifold absolute pressure sensor - signal - Pin 02 — Negative post |
| | Is the resistance greater than 100 Kohms?<br>**Yes**<br>GO to R6.<br>**No**<br>GO to R9. |
| **R6: CHECK THE MAP SIGNAL LINE FOR SHORT CIRCUIT TO POWER** | |
| | 1 Key on, engine off. |
| | 2 Measure the resistance between: |
| | Manifold absolute pressure sensor - signal - Pin 02 — Positive post |
| | Is the resistance greater than 100 Kohms?<br>**Yes**<br>GO to R7.<br>**No**<br>GO to R10. |
| **R7: CHECK THE MAP SIGNAL LINE FOR SHORT CIRCUIT TO SIGNAL RETURN AND SENSOR POWER** | |
| | 1 Measure the resistance between: |
| | Manifold absolute pressure sensor - signal - Pin 02 — Manifold absolute pressure sensor - power - Pin 01 |
| | Manifold absolute pressure sensor - signal - Pin 02 — Manifold absolute pressure sensor - return - Pin 03 |

GETtheMANUALS.org

Are the resistances greater than 100 Kohms?
**Yes**
GO to R8.
**No**
GO to R11.

**R8: CHECK THE MAP SIGNAL LINE FOR OPEN CIRCUIT**

1. Key off.
2. ECM connector disconnected.
3. Measure the resistance between:

| | |
|---|---|
| Manifold absolute pressure sensor - signal - Pin 02 | Manifold absolute pressure sensor - signal - Pin C-C1 |

Is the resistance less than 10 ohms?
**Yes**
An intermittent fault may be present in the wiring harness. Visually check for chaffed wires or other physical damage to the harness. If no fault is found in the circuit, suspect the following component(s):- MAP connector.- MAP- ECM connector.- ECM
**No**
REPAIR the open circuit. For additional information, refer to the wiring diagrams.

**R9: CHECK WHETHER THE SHORT CIRCUIT TO GROUND IS IN THE MAP HARNESS OR ECU**

1. Key off.
2. ECM connector disconnected.
3. Key on, engine off.
4. Measure the resistance between:

| | |
|---|---|
| Manifold absolute pressure sensor - signal - Pin 02 | Negative post |

Is the resistance greater than 100 Kohms?
**Yes**
Suspect:- ECM
**No**
REPAIR the short circuit. For additional information, refer to the wiring diagrams.

**R10: CHECK WHETHER THE SHORT CIRCUIT TO POWER IS IN THE TMAP HARNESS OR ECU**

1. Key off.
2. ECM connector disconnected.
3. Key on, engine off.
4. Measure the resistance between:

| | |
|---|---|
| Manifold absolute pressure sensor - signal - Pin 02 | Positive post |

Is the resistance greater than 100 Kohms?
**Yes**
Suspect:- ECM
**No**
REPAIR the short circuit. For additional information, refer to the wiring diagrams.

**R11: CHECK WHETHER THE SHORT CIRCUIT IS IN THE MAP HARNESS OR CONTROL UNIT**

1. Key off.
2. ECM connector disconnected.
3. Measure the resistance between:

| | |
|---|---|
| Manifold absolute pressure sensor - signal - Pin 02 | Manifold absolute pressure sensor - power - Pin 01 |
| Manifold absolute pressure sensor - signal - Pin 02 | Manifold absolute pressure sensor - return - Pin 03 |

Are the resistances greater than 100 Kohms?
**Yes**
Suspect:- ECM
**No**
REPAIR the short circuit. For additional information, refer to the wiring diagrams.

**R12: CHECK THE 5 VOLT SUPPLY LINE FOR SHORT CIRCUIT TO GROUND**

1. Measure the resistance between:

| | |
|---|---|
| Manifold absolute pressure sensor - power - Pin 01 | Negative post |

Is the resistance greater than 100 Kohms?
**Yes**
GO to R13.
**No**
GO to R18.

**R13: CHECK THE 5 VOLT SUPPLY LINE FOR SHORT CIRCUIT TO POWER**

1. Measure the resistance between:

| | |
|---|---|
| Manifold absolute pressure sensor - power - Pin 01 | Positive post |

Is the resistance greater than 100 Kohms?
**Yes**
GO to R14.
**No**
GO to R19.

**R14: CHECK THE MAP 5 VOLT SUPPLY LINE FOR OPEN CIRCUIT**

1. Key off.
2. ECM connector disconnected.
3. Key on, engine off.
4. Measure the resistance between:

| | |
|---|---|
| Manifold absolute pressure sensor - power - Pin 01 | Manifold absolute pressure sensor - power - Pin C-D1 |

Is the resistance less than 10 ohms?
**Yes**
Suspect :- ECM connector.- ECM
**No**
REPAIR the open circuit. For additional information, refer to the wiring diagrams.

**R15: CHECK THE MAP SENSOR RETURN LINE FOR SHORT CIRCUIT TO POWER**

1. Measure the resistance between:

| | |
|---|---|
| Manifold absolute pressure sensor - return - Pin 03 | Positive post |

Is the resistance greater than 100 Kohms?
**Yes**
GO to R16.
**No**

GETtheMANUALS.org

GO to R20.

**R16: CHECK WHETHER THE 5 VOLT SUPPLY AND SIGNAL RETURN LINES ARE SHORTED TOGETHER**

1 Measure the resistance between:

| | |
|---|---|
| Manifold absolute pressure sensor - power - Pin 01 | Manifold absolute pressure sensor - return - Pin 03 |

Is the resistance greater than 100 Kohms?

**Yes**

GO to R17.

**No**

GO to R21.

**R17: CHECK THE MAP SENSOR RETURN LINE FOR OPEN CIRCUIT**

1 Key off.

2 ECM connector disconnected.

3 Key on, engine off.

4 Measure the resistance between:

| | |
|---|---|
| Manifold absolute pressure sensor - return - Pin 03 | Manifold absolute pressure sensor - return - Pin C-E2 |

Is the resistance less than 10 ohms?

**Yes**

Suspect :- MAP connector- ECM connector- MAP- ECM

**No**

REPAIR the open circuit. For additional information, refer to the wiring diagrams.

**R18: CHECK WHETHER THE SHORT CIRCUIT TO GROUND IS IN THE MAP HARNESS OR ECU**

1 Key off.

2 ECM connector disconnected.

3 Key on, engine off.

4 Measure the resistance between:

| | |
|---|---|
| Manifold absolute pressure sensor - power - Pin 01 | Negative post |

Is the resistance greater than 100 Kohms?

**Yes**

Suspect:- ECM

**No**

REPAIR the short circuit. For additional information, refer to the wiring diagrams.

**R19: CHECK WHETHER THE SHORT CIRCUIT TO POWER IS IN THE MAP HARNESS OR ECU**

1 Key off.

2 ECM connector disconnected.

3 Key on, engine off.

4 Measure the resistance between:

| | |
|---|---|
| Manifold absolute pressure sensor - power - Pin 01 | Positive post |

Is the resistance greater than 100 Kohms?

**Yes**

Suspect:- ECM

**No**

REPAIR the short circuit. For additional information, refer to the wiring diagrams.

**R20: CHECK WHETHER THE SHORT CIRCUIT TO POWER IS IN THE MAP HARNESS OR ECU**

1 Key off.

2 ECM connector disconnected.

3 Key on, engine off.

4 Measure the resistance between:

| | |
|---|---|
| Manifold absolute pressure sensor - return - Pin 03 | Positive post |

Is the resistance greater than 100 Kohms?

**Yes**

Suspect:- ECM

**No**

REPAIR the short circuit. For additional information, refer to the wiring diagrams.

**R21: CHECK WHETHER THE SHORT CIRCUIT IS IN THE MAP HARNESS OR CONTROL UNIT**

1 Key off.

2 ECM connector disconnected.

3 Measure the resistance between:

| | |
|---|---|
| Manifold absolute pressure sensor - power - Pin 01 | Manifold absolute pressure sensor - return - Pin 03 |

Is the resistance greater than 100 Kohms?

**Yes**

Suspect:- ECM

**No**

REPAIR the short circuit. For additional information, refer to the wiring diagrams.

GETtheMANUALS.org

# Electronic Engine Controls - 2.7L V6 - TdV6 - Brake Pedal Position (BPP) Switch

Removal and Installation

## Removal

1. Switch the ignition on.
2. Position the front seat fully rearwards.
3. Switch the ignition off.
4. Remove the driver's side footwell trim panel.
   - Release the 3 clips.

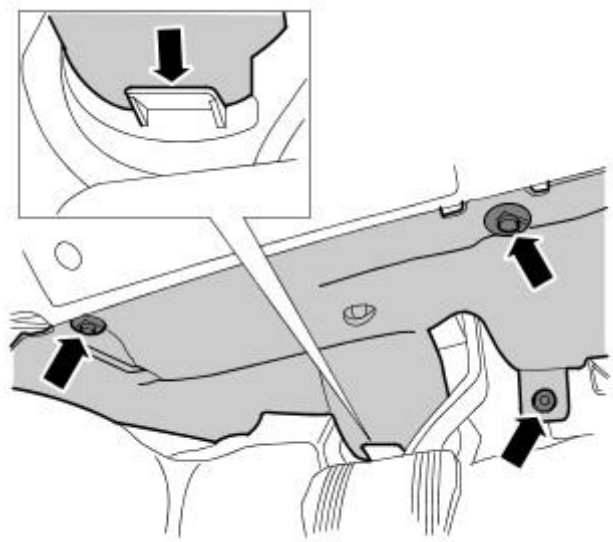

E102662

5. Release the brake pedal position (BPP) switch.
   - Rotate the BPP switch 45 degrees counter-clockwise.

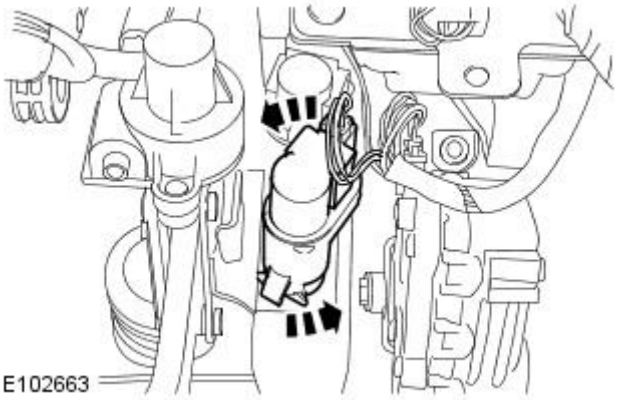

E102663

6. Remove the BPP switch.
   - Disconnect the electrical connector.

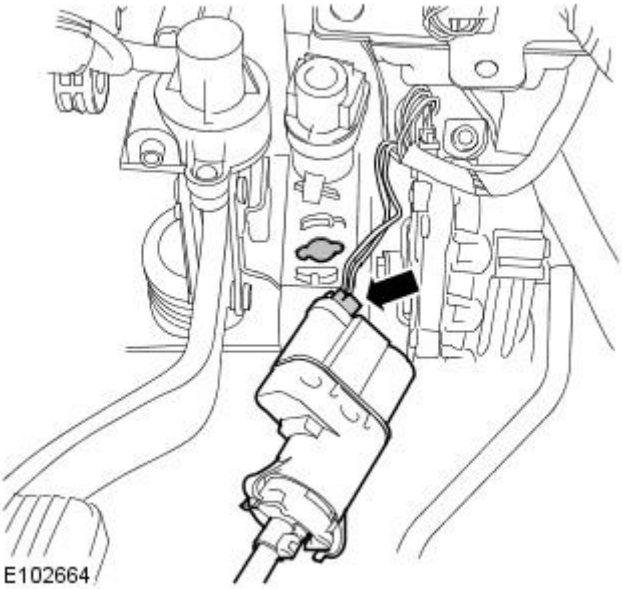

E102664

## Installation

1. CAUTIONS:

GETtheMANUALS.org

Make sure that the brake pedal remains in the rest position during this procedure.

The bracket is keyed to avoid incorrect orientation. Failure to correctly align the switch may result in damage to the vehicle.

Make sure that the pedal box, booster-to-brake pedal assembly and switch bracket are all installed correctly before installing the switch.

Install the BPP switch.

- Locate the BPP switch in the bracket.
- Rotate the BPP switch 45 degrees clockwise.

**2.** Connect the electrical connector.

**3.** Install the driver's side footwell trim panel.

- Align the trim panel with the guide.
- Install the 3 clips.

GETtheMANUALS.org

# Electronic Engine Controls - 2.7L V6 - TdV6 - Camshaft Position (CMP) Sensor

Removal and Installation

## Removal

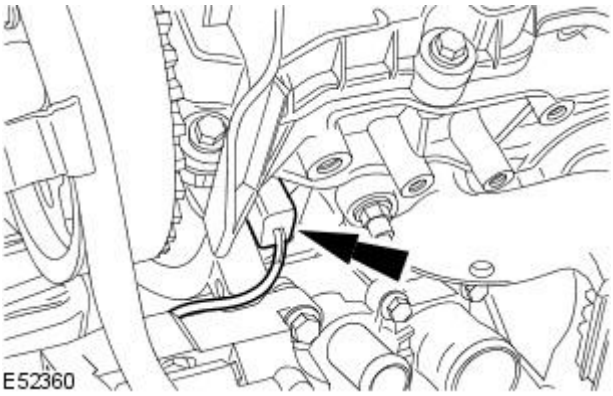


1. Remove the left-hand exhaust gas recirculation (EGR) valve.
   For additional information, refer to: Exhaust Gas Recirculation (EGR) Valve LH (303-08B Engine Emission Control - 2.7L V6 - TdV6, Removal and Installation).
2. Disconnect the camshaft position (CMP) sensor electrical connector (engine shown removed for clarity).

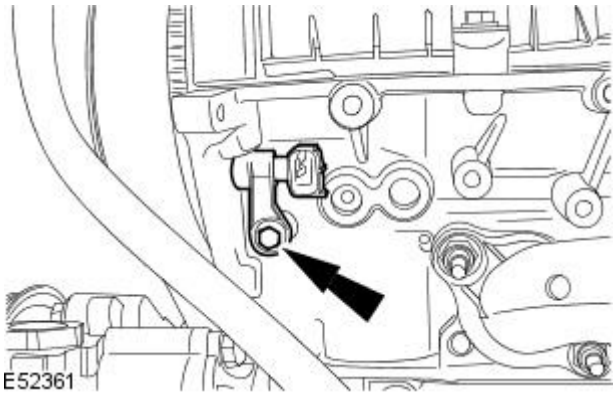


3. Remove the CMP sensor (engine shown removed for clarity).
   - Remove and discard the CMP sensor.

## Installation

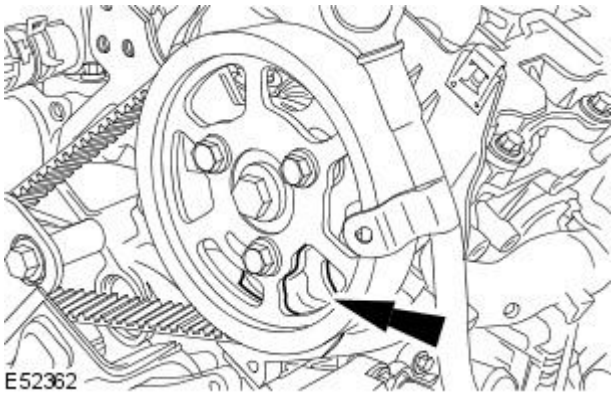


1. NOTE: Only turn the engine in the normal direction of rotation.

   Turn the engine until one of the three webs on the back of the camshaft pulley is visible through the CMP sensor housing (timing belt upper cover shown removed for clarity).

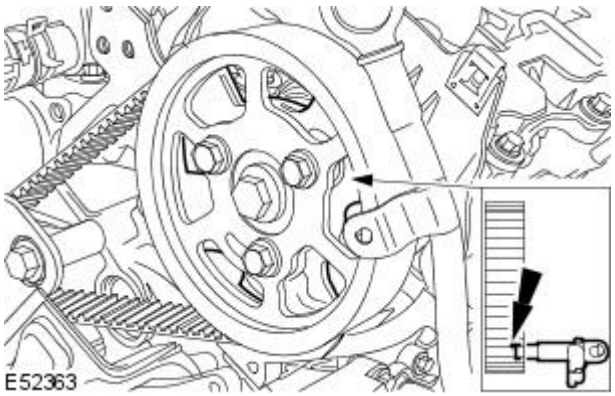


2. CAUTION: The CMP sensor tip must rest on one of the three webs on the back of the camshaft pulley. Incorrect installation may result in the CMP sensor being damaged.

   Install the CMP sensor until the tip of the sensor touches the back of the camshaft pulley (timing belt upper cover shown removed for clarity).

GETtheMANUALS.org

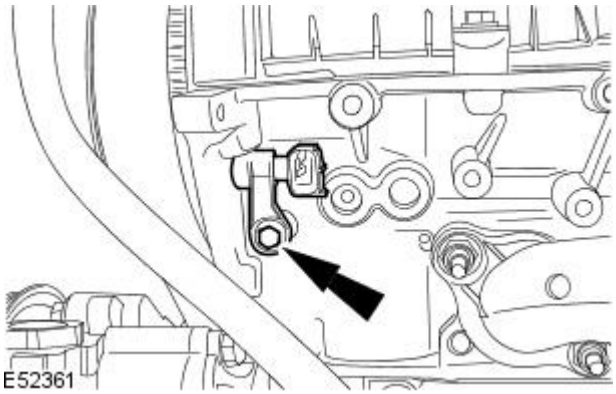


**3.** Install the CMP sensor retaining bolt.

- Tighten to 10 Nm

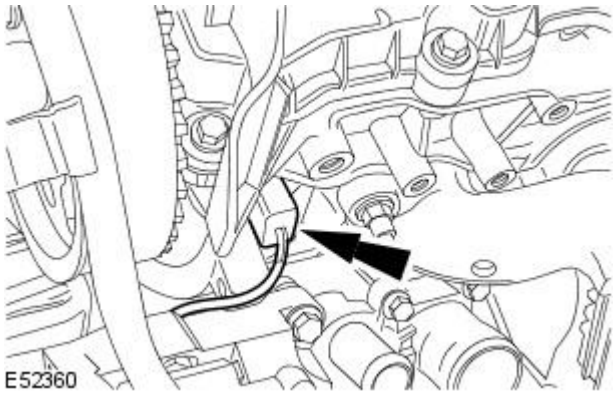


**4.** Connect the CMP sensor electrical connector.

**5.** Install the left-hand EGR valve.
For additional information, refer to: Exhaust Gas Recirculation (EGR) Valve LH (303-08B Engine Emission Control - 2.7L V6 - TdV6, Removal and Installation).

GETtheMANUALS.org

# Electronic Engine Controls - 2.7L V6 - TdV6 - Crankshaft Position (CKP) Sensor

Removal and Installation

**General Equipment**

| |
|---|
| Tie Strap(s) |

## Removal

All vehicles

1. Disconnect the battery ground cable.
   For additional information, refer to: Battery Disconnect and Connect (414-01 Battery, Mounting and Cables, General Procedures).
2. Remove the air deflector.
   For additional information, refer to: Air Deflector (501-02 Front End Body Panels, Removal and Installation).

Left-hand drive vehicles

3. Lower the vehicle.
4. Center the steering wheel.
   - Lock in position, remove the ignition key.
5. Raise the vehicle.
6. Detach the lower steering column
   - Remove the steering gear shaft pinch bolt.

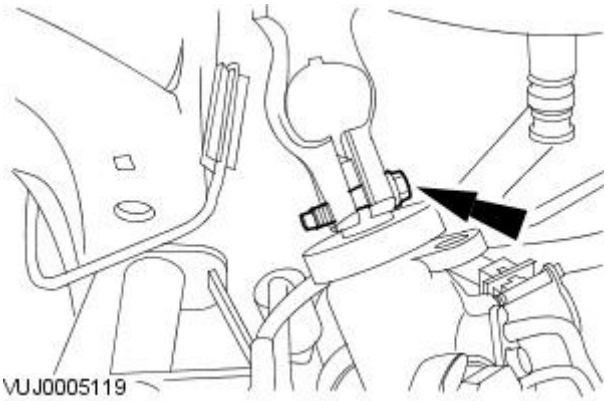


7. Detach the steering gear.

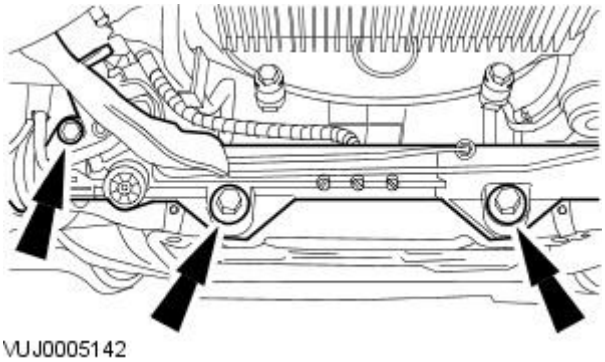


8. Using suitable tie strap(s), secure the steering gear.

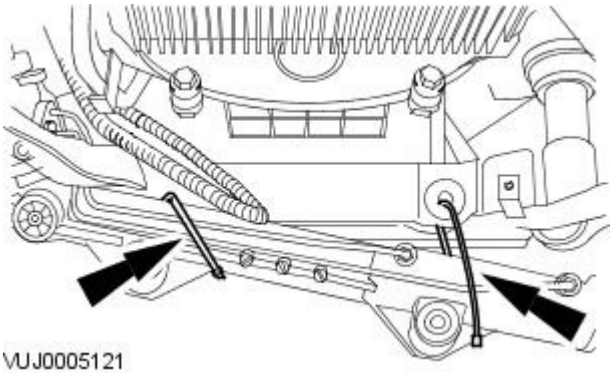


All vehicles

GETtheMANUALS.org

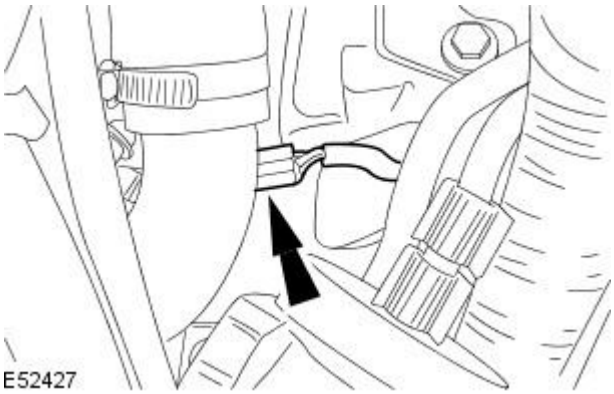


**9.** Disconnect the crankshaft position (CKP) sensor electrical connector.

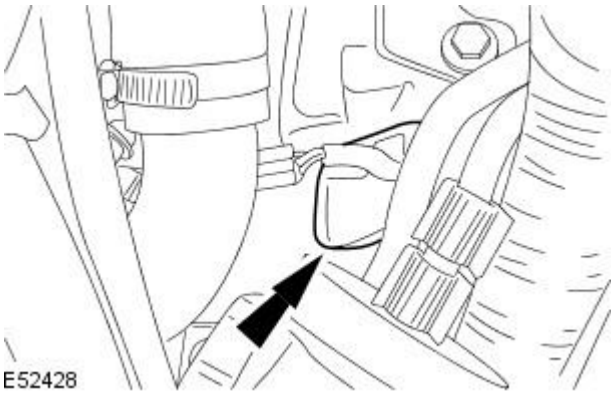


**10.** Remove the CKP sensor blanking cover.

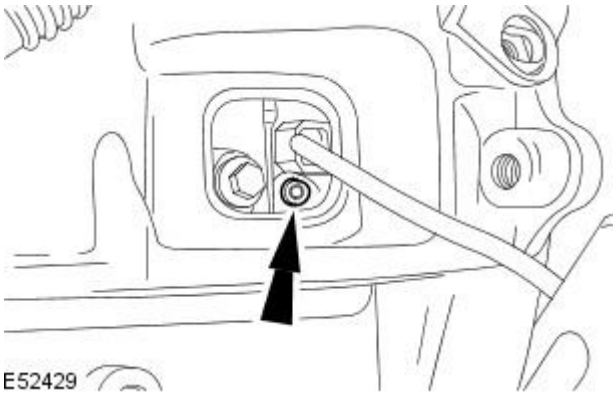


**11.** NOTE: The CKP sensor retaining bolt should not be removed from the CKP sensor.

Fully loosen the CKP sensor retaining bolt.

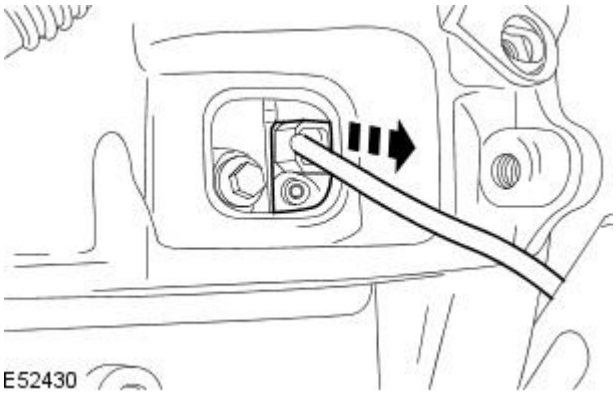


**12.** Remove the CKP sensor.

## Installation

GETtheMANUALS.org

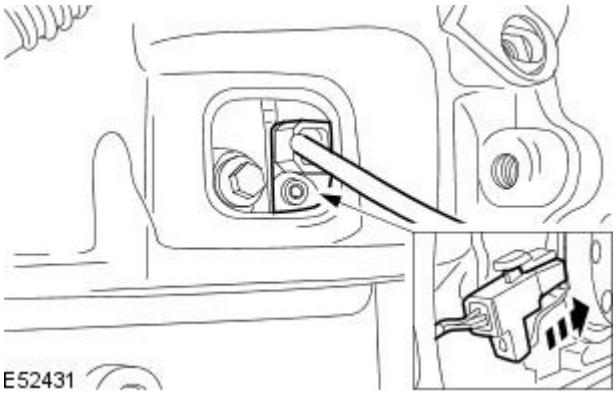


**1.** CAUTION: Install the CKP sensor correctly into the housing. Failure to follow this instruction may result in damage to the CKP sensor.

To install, reverse the removal procedure.

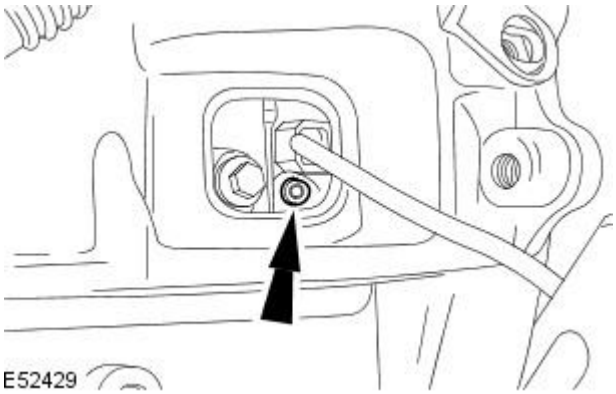


**2.** Tighten to 5 Nm.

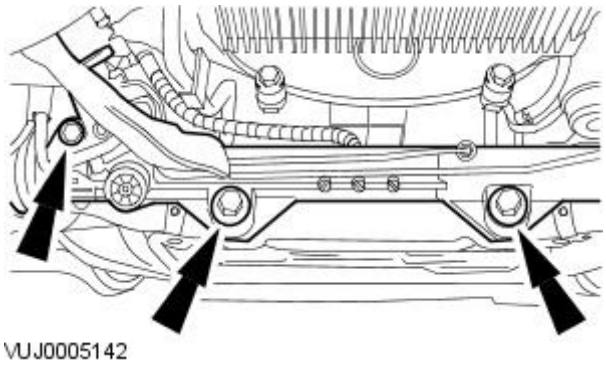


**3.** Tighten to 100 Nm.

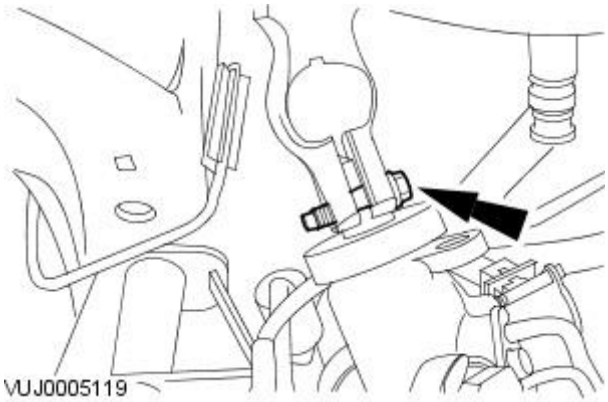


**4.** Tighten to 35 Nm.

GETtheMANUALS.org

# Electronic Engine Controls - 2.7L V6 - TdV6 - Crankshaft Position (CKP) Sensor Ring

Removal and Installation

| Special Tool(s) | |
|---|---|
| E52723 | Installer - Timing Trigger Wheel<br><br>303-1130 |

## Removal

Vehicles with manual transmission

1. Remove the flywheel.
   For additional information, refer to: Flywheel (303-01C Engine - 2.7L V6 - TdV6, In-vehicle Repair).

Vehicles with automatic transmission

2. Remove the flexplate.
   For additional information, refer to: Flexplate (303-01C Engine - 2.7L V6 - TdV6, In-vehicle Repair).

All vehicles

3. Remove the crankshaft position (CKP) sensor.

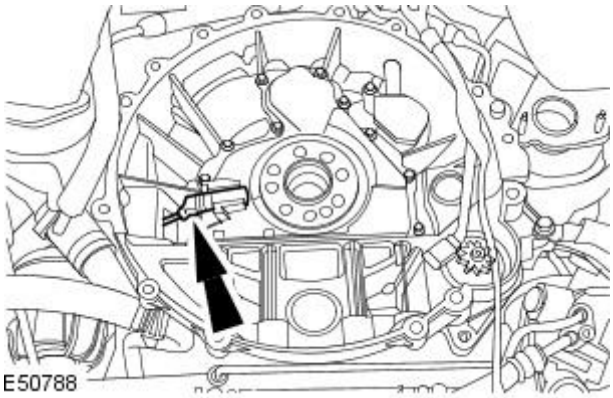
E50788

4. Remove the CKP sensor ring.
   - Discard the CKP ring.

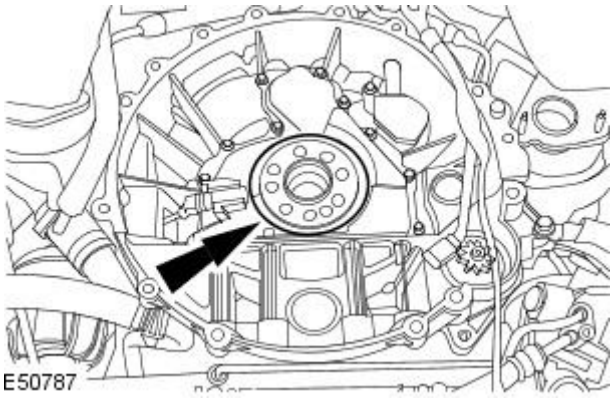
E50787

## Installation

• NOTE: Install a new CKP ring.

All vehicles

GETtheMANUALS.org

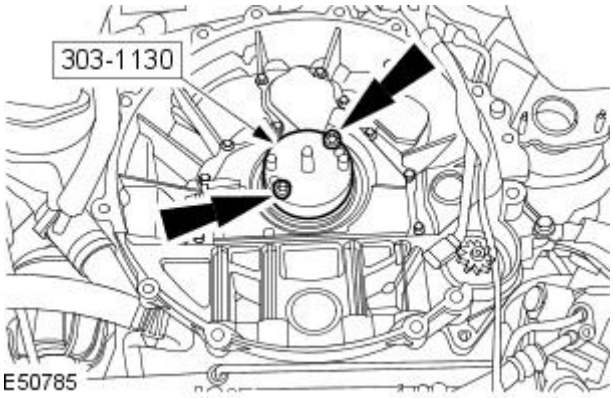


**1.** Install the alignment special tool to the crankshaft.

- Align the special tool alignment peg to the timing hole on the crankshaft.

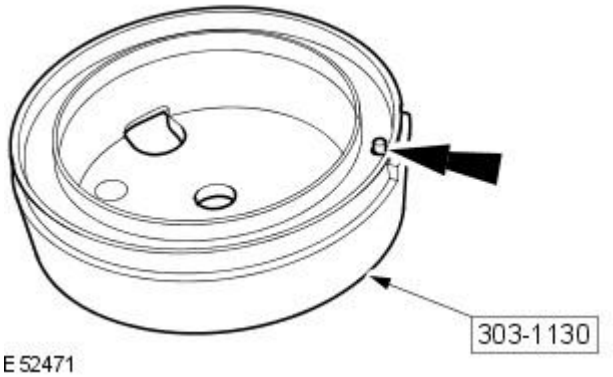


**2.** NOTE: Make sure that the CKP sensor ring is aligned correctly with the special tool pip and that both mating surfaces are fully seated.

Install the CKP sensor ring to the installation special tool.

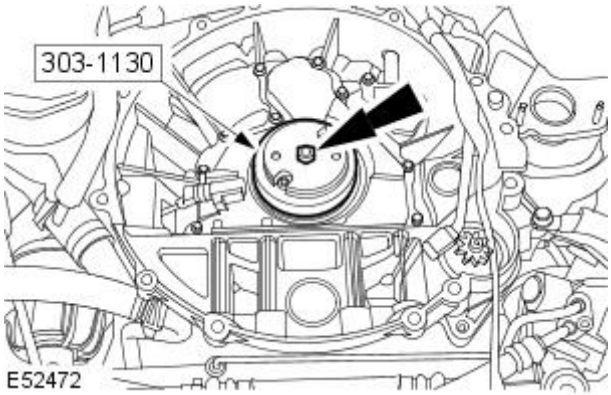


**3.** NOTE: Assemble the installation special tool to the alignment special tool.

Using the special tool, install the CKP sensor ring.

- Tighten the special tool nut.

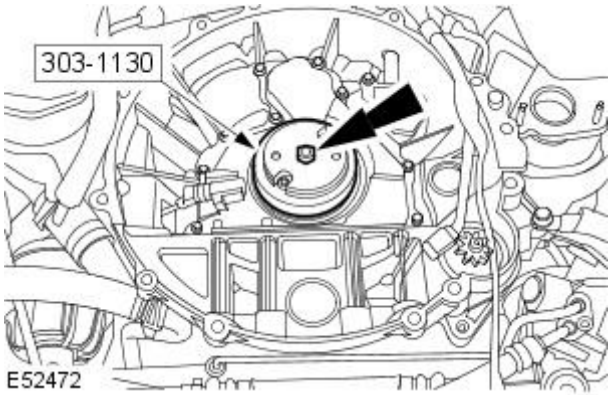


**4.** Remove the installation special tool.

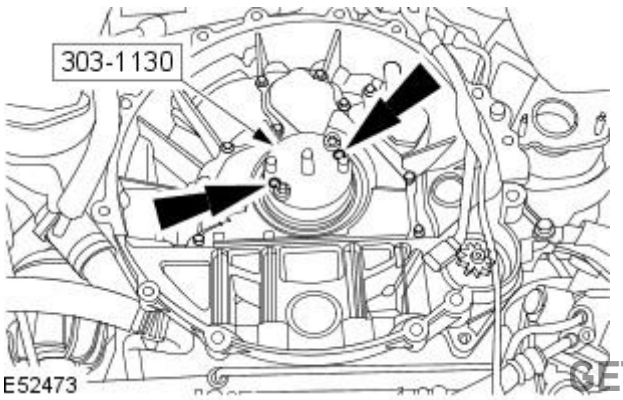


**5.** Remove the special tool retaining bolts and reposition into the threaded holes on the special tool and tighten to remove the alignment special tool from the crankshaft.

GETtheMANUALS.org

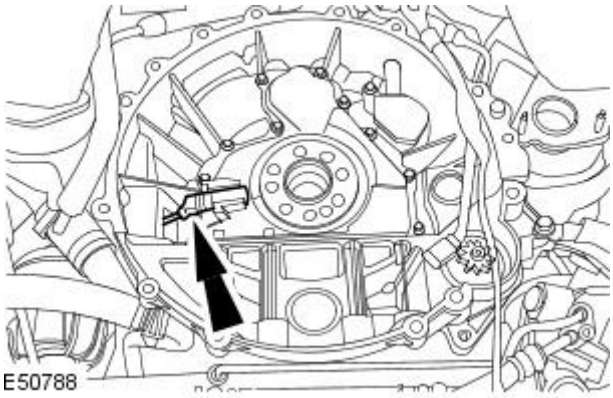


**6.** CAUTION: Install the CKP sensor correctly into the housing. Failure to follow this instruction may result in damage to the CKP sensor.

Install the crankshaft position (CKP) sensor.

- Tighten to 5 Nm.

Vehicles with automatic transmission

**7.** Install the flexplate.
For additional information, refer to: Flexplate (303-01C Engine - 2.7L V6 - TdV6, In-vehicle Repair).

Vehicles with manual transmission

**8.** Install the flywheel.
For additional information, refer to: Flywheel (303-01C Engine - 2.7L V6 - TdV6, In-vehicle Repair).

GETtheMANUALS.org

# Electronic Engine Controls - 2.7L V6 - TdV6 - Engine Control Module (ECM)

Removal and Installation

## Removal

1. Disconnect the battery ground cable.
   For additional information, refer to: Battery Disconnect and Connect (414-01 Battery, Mounting and Cables, General Procedures).
2. Remove the cabin air filter.
   For additional information, refer to: Cabin Air Filter (412-01 Air Distribution and Filtering, Removal and Installation).
3. Remove the engine compartment support.

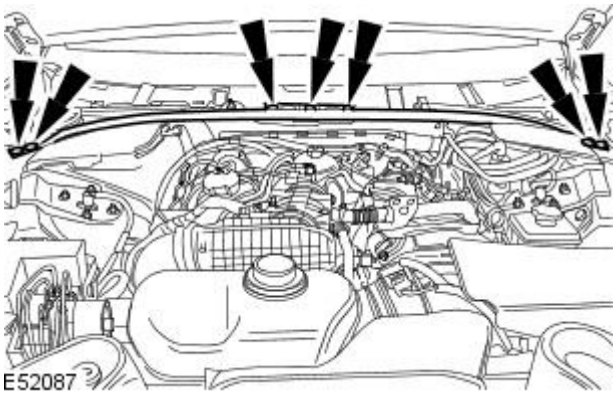
E52087

4. Remove the cabin air filter housing retaining nut.

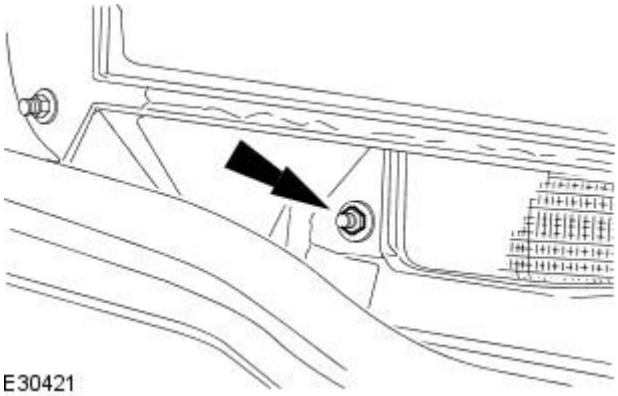
E30421

5. Remove the cabin air filter housing.

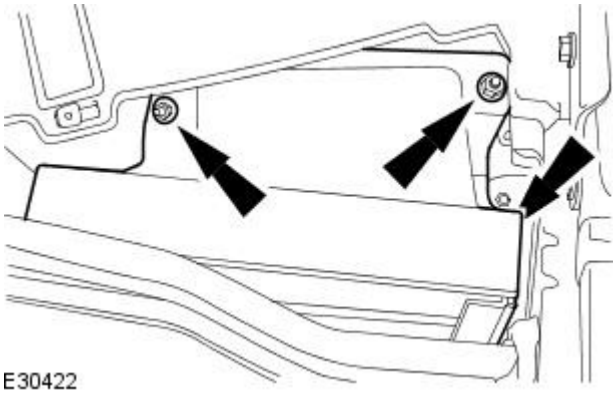
E30422

6. Remove the engine compartment panel.

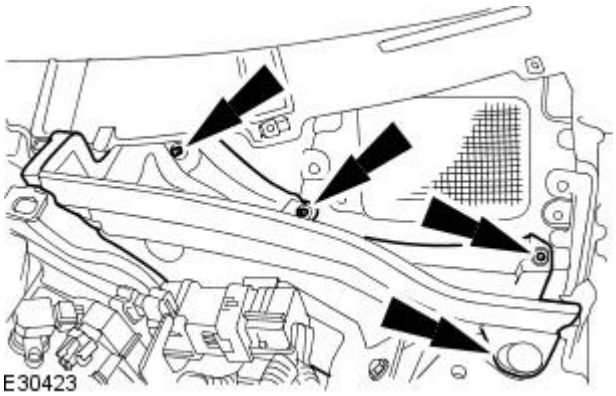
E30423

GETtheMANUALS.org

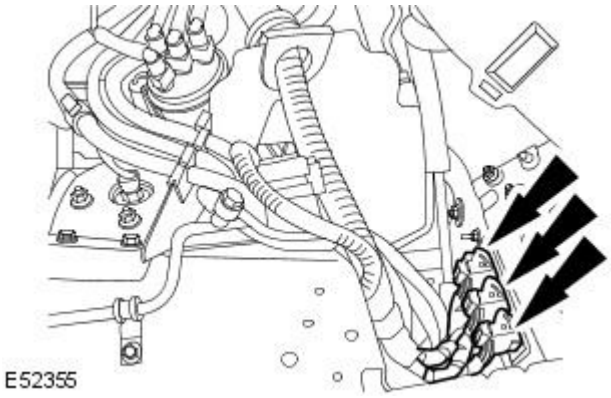


**7.** Disconnect the engine control module (ECM) electrical connectors.

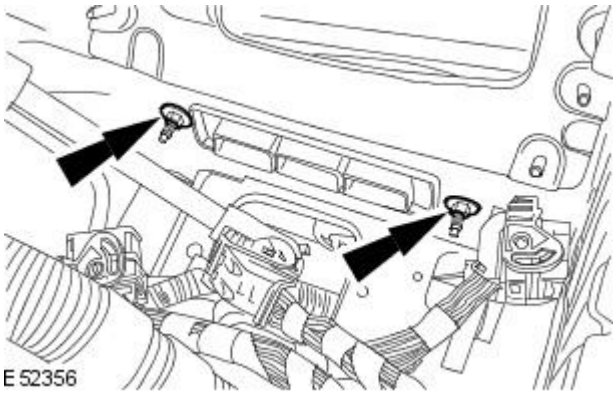


**8.** Remove the ECM bracket retaining nuts.

**9.** Remove the glove compartment.
For additional information, refer to: Glove Compartment (501-12 Instrument Panel and Console, Removal and Installation).

**10.** Remove the ECM.

- Remove the ECM bracket bolt.

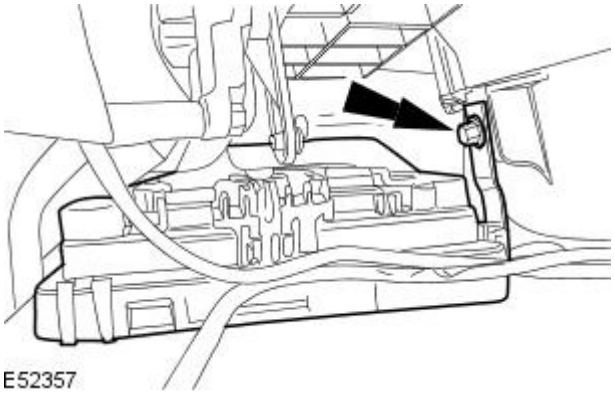


## Installation

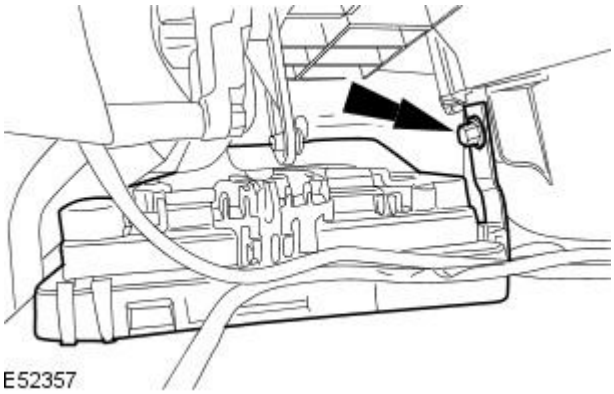


**1.** To install, reverse the removal procedure.

- Tighten to 6 Nm.

GETtheMANUALS.org

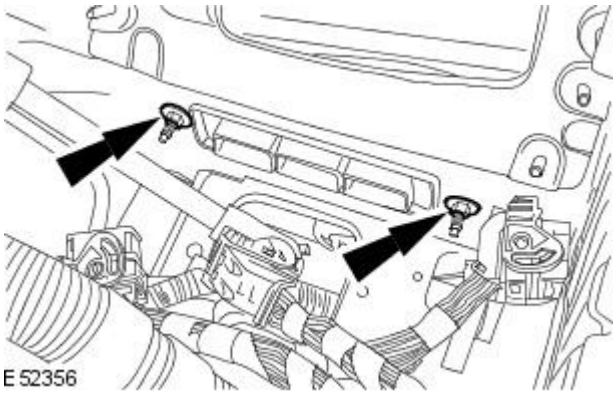


**2.** Tighten to 3 Nm.

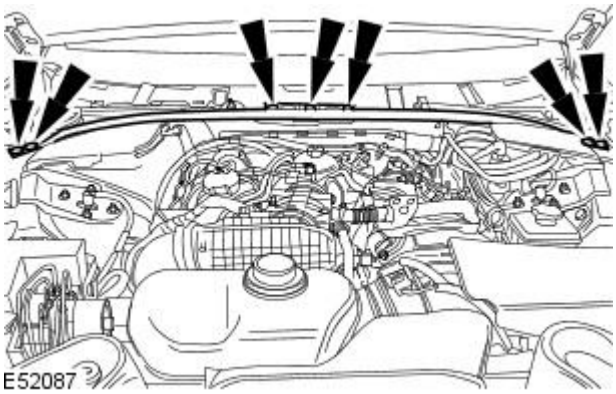


**3.** Tighten to 25 Nm.

GETtheMANUALS.org

# Electronic Engine Controls - 2.7L V6 - TdV6 - Engine Coolant Temperature (ECT) Sensor

Removal and Installation

## Removal

**1.** WARNINGS:

Never remove the coolant expansion tank pressure cap under any circumstances while the engine is operating. Failure to follow this instruction may result in personal injury.

To avoid hot coolant or steam blowing out of the cooling system, use extreme care when removing the coolant expansion tank pressure cap. Wait until the engine has cooled down, then insulate the coolant pressure cap with a suitable cloth and slowly loosen the coolant expansion tank pressure cap until the cooling system pressure is released. Do not remove the coolant expansion tank pressure cap. Step back while the pressure is released from the system. When all of the pressure has been released slowly remove the coolant expansion tank pressure cap (still with the suitable cloth in position) from the coolant expansion tank. Failure to follow this instruction may result in personal injury.

Release the cooling system pressure.

- Remove the coolant expansion tank pressure cap.

**2.** Remove the oil filler cap.

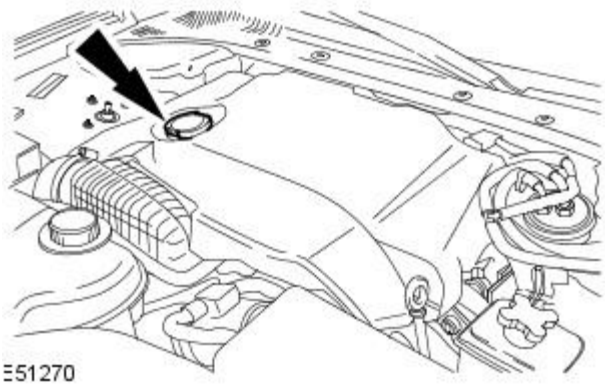


**3.** Remove the engine cover.

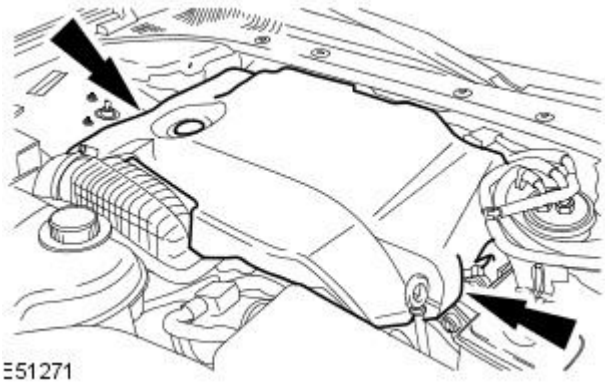


**4.** Disconnect the engine coolant temperature (ECT) sensor electrical connector.

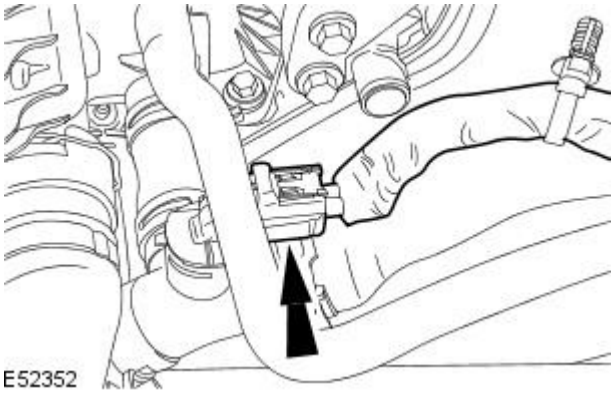


GETtheMANUALS.org

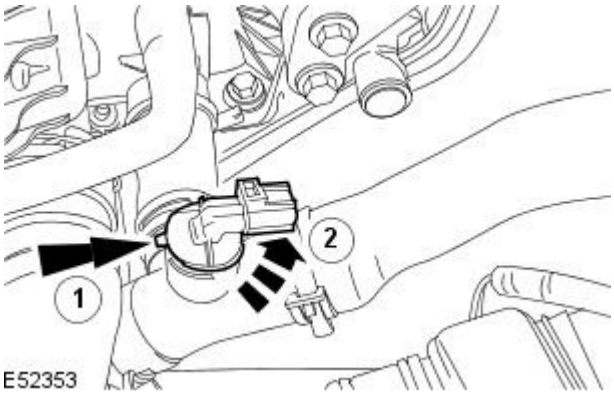


**5.** Remove the ECT sensor.

1. Lift the locking tang.
2. Rotate the ECT sensor counterclockwise to remove.

## Installation

**1.** To install, reverse the removal procedure.

- Fill the cooling system up to the MAX mark on the coolant expansion tank.

GETtheMANUALS.org

# Electronic Engine Controls - 2.7L V6 - TdV6 - Engine Oil Pressure (EOP) Sensor

Removal and Installation

## Removal

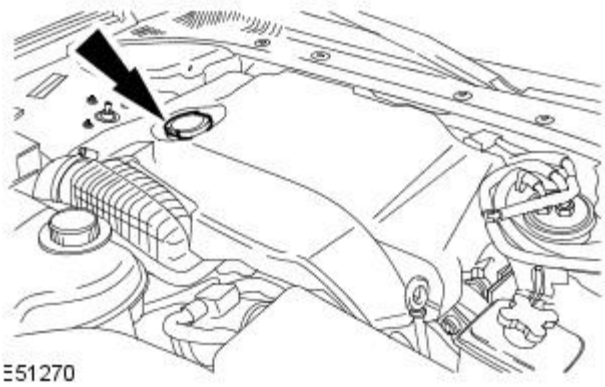


**1.** Remove the oil filler cap.

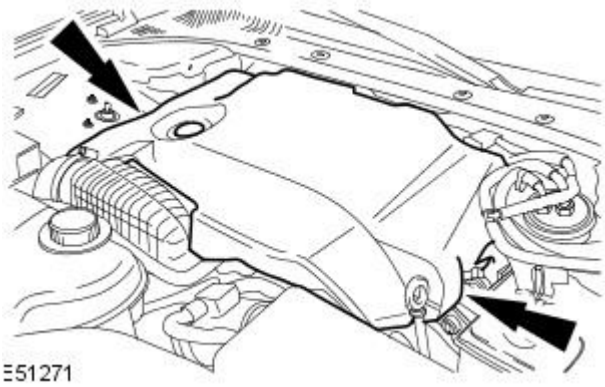


**2.** Remove the engine cover.

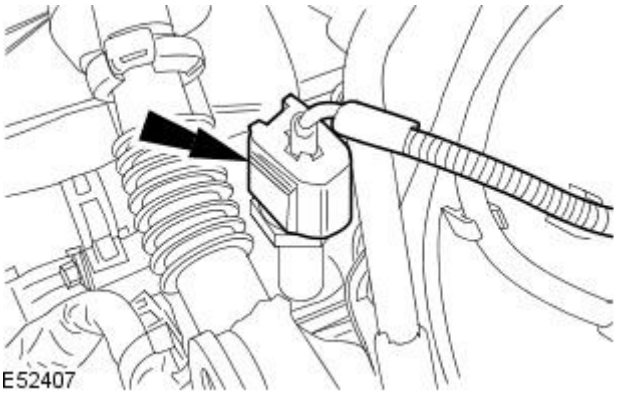


**3.** Disconnect the engine oil pressure (EOP) sensor electrical connector.

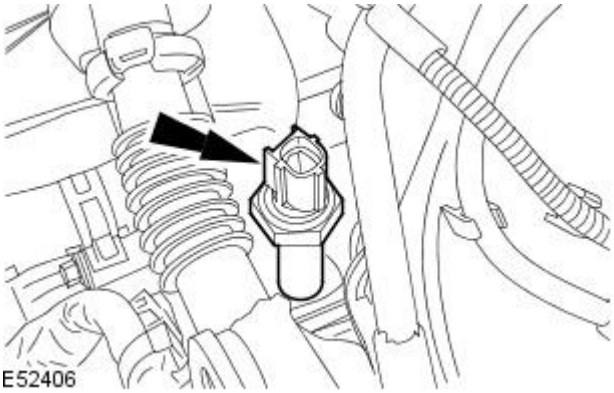


**4.** Remove the EOP sensor.

## Installation

GETtheMANUALS.org

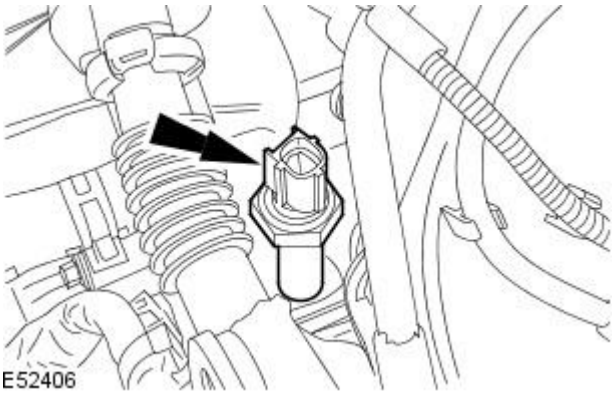


1. To install, reverse the removal procedure.
   - Tighten to 15 Nm.

GETtheMANUALS.org

# Electronic Engine Controls - 2.7L V6 - TdV6 - Fuel Rail Pressure (FRP) Sensor

Removal and Installation

**General Equipment**

| |
|---|
| Pneumatic vacuum gun |

## Removal

• WARNINGS:

Wait at least 30 seconds after the engine stops before commencing any repair to the high pressure fuel injection system. Failure to follow this instruction may result in personal injury.

Do not smoke or carry lighted tobacco or open flame of any type when working on or near any fuel related components. Highly flammable mixtures are always present and may ignite. Failure to follow these instructions may result in personal injury.

This procedure involves fuel handling. Be prepared for fuel spillage at all times and always observe fuel handling precautions. Failure to follow these instructions may result in personal injury.

Do not carry out any repairs to the fuel system with the engine running. The fuel pressure within the high-pressure system can be as high as 1650 bar. Failure to follow this instruction may result in personal injury.

• CAUTIONS:

Make sure the workshop area in which the vehicle is being worked on is as clean and as dust free as possible. Foreign matter from work on clutches, brakes or from machining or welding operations can contaminate the fuel system and may result in later malfunction.

Always carry out the cleaning process before carrying out any repairs to the fuel injection system components. Failure to follow this instruction may result in foreign matter ingress to the fuel injection system.

Diesel fuel injection equipment is manufactured to very precise tolerances and fine clearances. It is therefore essential that absolute cleanliness is observed when working with these components. Always install blanking plugs to any open orifices or lines.

Do not remove the fuel rail pressure sensor from the fuel injection diverter rail.

• NOTE: If a new fuel rail pressure sensor is to be installed, a new fuel injection diverter rail and fuel rail pressure sensor must be installed as an assembly.

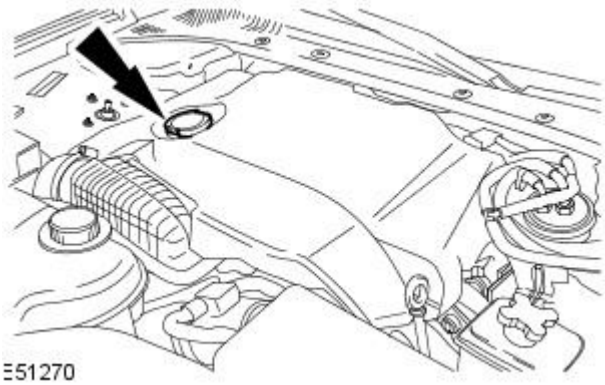


**1.** Remove the oil filler cap.

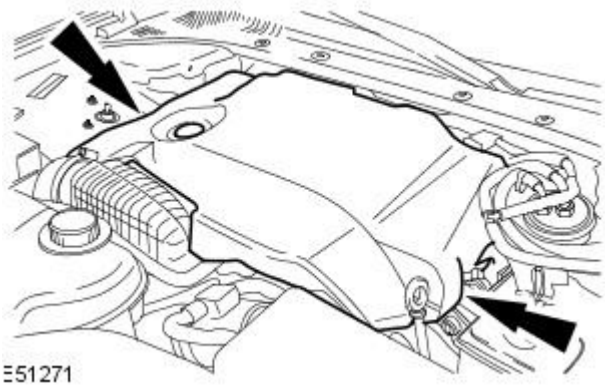


**2.** Remove the engine cover.

**3.** Remove the fuel injector soundproofing.

GETtheMANUALS.org

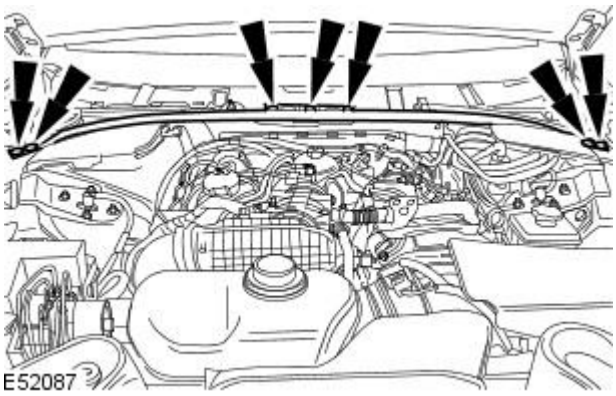


**4.** Remove the engine compartment support.

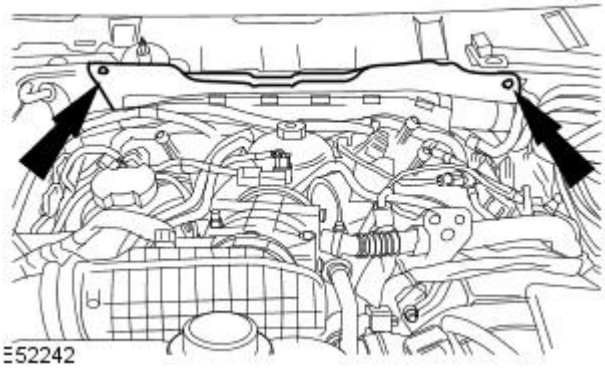


**5.** Remove the engine compartment access panel.

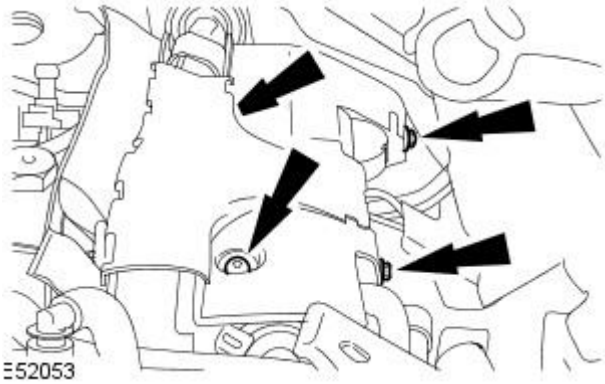


**6.** Remove the engine harness retaining bolts.

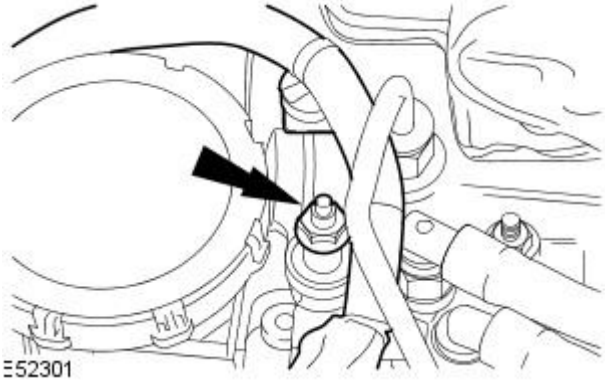


**7.** Detach the wiring harness retaining nut.

**8.** Clean around the low pressure fuel inlet and return lines, high-pressure fuel supply lines and surrounding areas.
For additional information, refer to: Fuel Injection Component Cleaning (303-04C Fuel Charging and Controls - 2.7L V6 - TdV6, General Procedures).

GETtheMANUALS.org

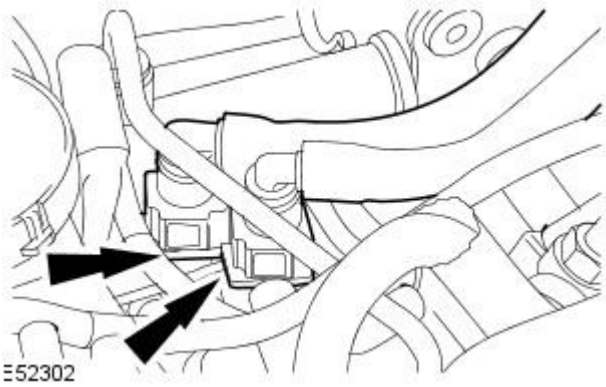


**9.** Disconnect the low pressure fuel inlet and return lines.
For additional information, refer to: Quick Release Coupling - Push Connect (310-00 Fuel System - General Information, General Procedures).

- Install suitable blanking caps to the fuel lines and unions.

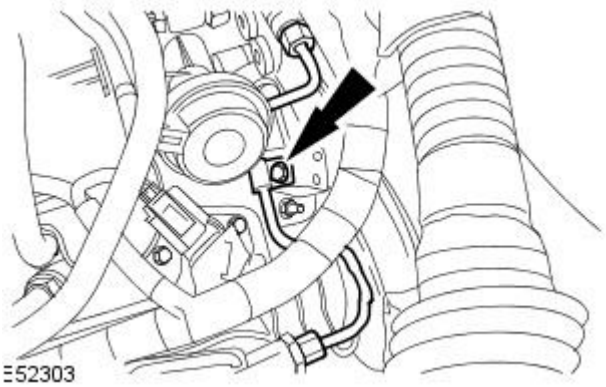


**10.** NOTE: Left-hand shown, right-hand similar.

Detach the high pressure fuel supply line clamps.

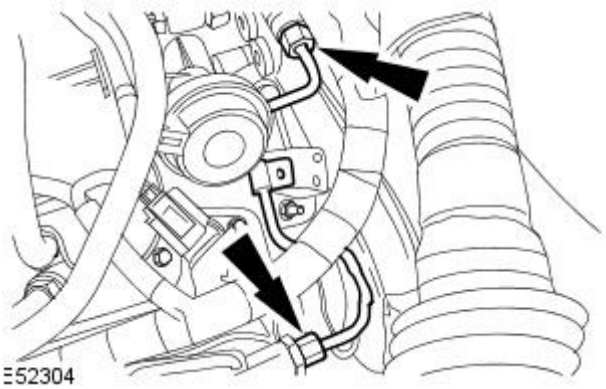


**11.** CAUTION: Make sure that the high-pressure fuel supply line remains in contact with the fuel injection supply manifold and fuel injection diverter rail until both unions have been detached and cleaned. Failure to follow this instruction may result in foreign matter ingress to the fuel injection system.

• NOTE: Left-hand shown, right-hand similar.

Loosen the high pressure fuel supply lines.

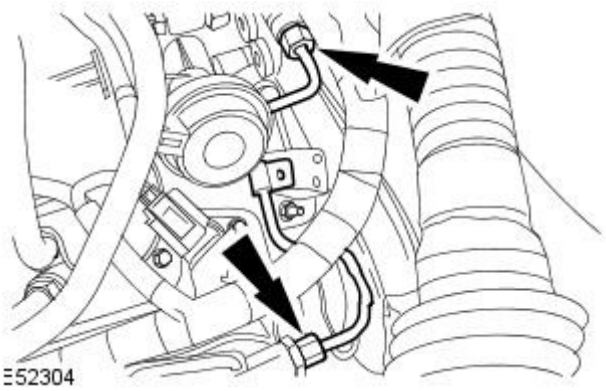


**12.** Using the pneumatic vacuum gun, vacuum foreign material from the high-pressure fuel supply lines, the fuel injection diverter rail and the fuel injection supply manifolds.

**13.** NOTE: Left-hand shown, right-hand similar.

Remove and discard the high pressure fuel supply lines.

- Install suitable blanking caps to the open threaded ports on the fuel injection diverter rail and fuel injection supply manifold.

GETtheMANUALS.org

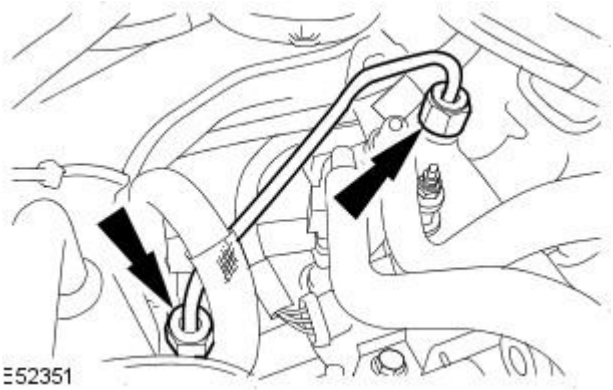


**14.** CAUTIONS:

Make sure that the high-pressure fuel supply line remains in contact with the fuel injection pump and fuel injection diverter rail until both unions have been detached and cleaned. Failure to follow this instruction may result in foreign matter ingress to the fuel injection system.

Make sure the tool used to loosen the high-pressure fuel supply line unions is used at the top of the unions as this is where there is most material. Failure to follow this instruction may result in damage to the unions.

Loosen the high pressure fuel supply line.

**15.** Using the pneumatic vacuum gun, vacuum foreign material from the high-pressure fuel supply lines, the fuel injection diverter rail and the fuel injection pump.

**16.** Remove and discard the high pressure fuel supply line.

- Install suitable blanking caps to the open threaded ports on the fuel injection diverter rail and fuel injection pump.

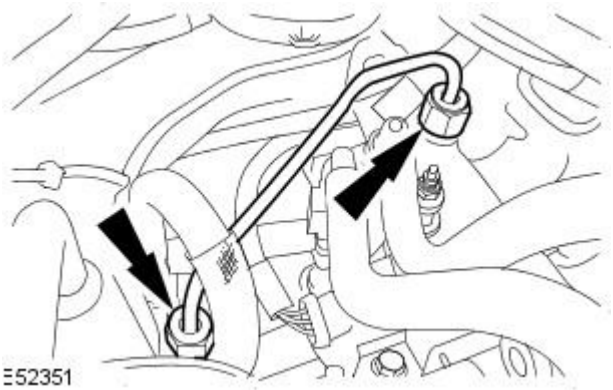


**17.** Remove the fuel line retaining nut.

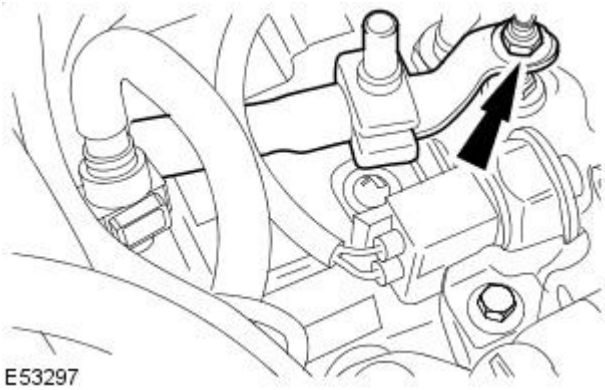


**18.** Disconnect the electrical connector.

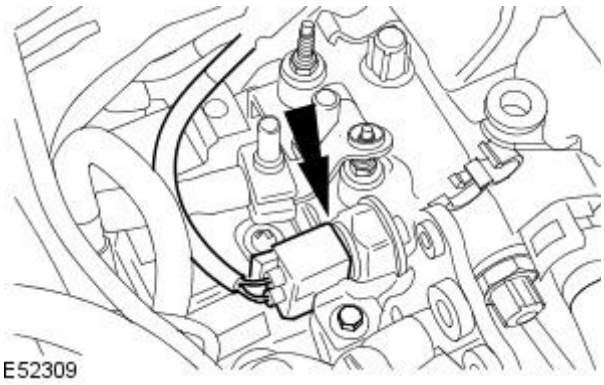


GETtheMANUALS.org

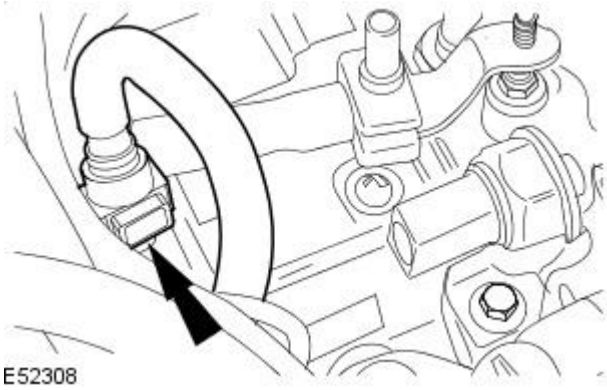


**19.** Disconnect the fuel line.

- Install suitable blanking caps to the fuel line and union.

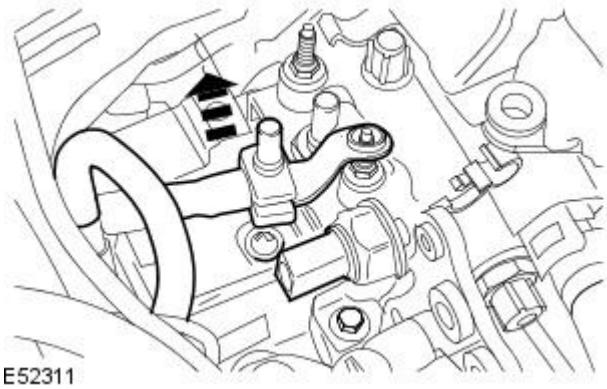


**20.** Detach the fuel line.

- Install suitable blanking caps to the fuel line and union.

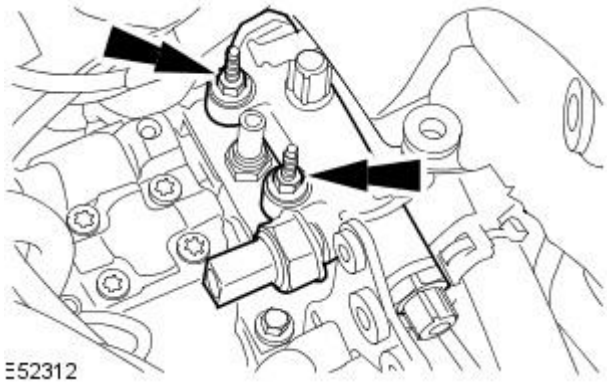


**21.** CAUTION: Do not remove the fuel rail pressure sensor from the fuel injection diverter rail.

• NOTE: If a new fuel rail pressure sensor is to be installed, a new fuel injection diverter rail and fuel rail pressure sensor must be installed as an assembly.

Remove the fuel injection diverter rail.

## Installation

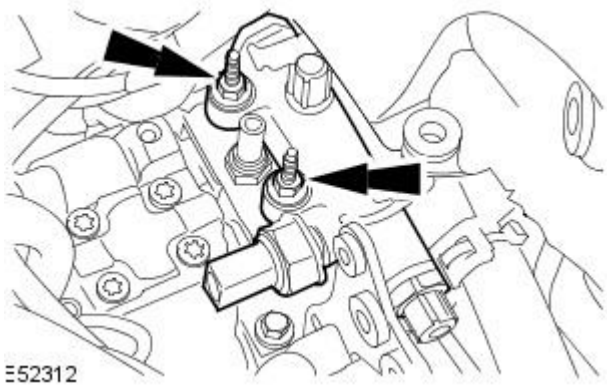


**1.** WARNINGS:

Do not smoke or carry lighted tobacco or open flame of any type when working on or near any fuel related components. Highly flammable mixtures are always present and may ignite. Failure to follow these instructions may result in personal injury.

This procedure involves fuel handling. Be prepared for fuel spillage at all times and always observe fuel handling precautions. Failure to follow these instructions may result in personal injury.

Do not carry out any repairs to the fuel injection system with the engine running. The fuel pressure within the system can be as high as 1650 bar. Failure to follow this instruction may result in personal injury.

• CAUTIONS:

Make sure the workshop area in which the vehicle is being worked on is as clean and as dust free as possible. Foreign matter from work on clutches, brakes or from machining or welding operations can contaminate the fuel system and may result in later malfunction.

Always carry out the cleaning process before carrying out any repairs to the fuel injection system components. Failure to follow this instruction may result in foreign matter ingress to the fuel injection system.

GETtheMANUALS.org

Diesel fuel injection equipment is manufactured to very precise tolerances and fine clearances. It is therefore essential that absolute

cleanliness is observed when working with these components. Always install blanking plugs to any open orifices or lines.

Do not remove the fuel rail pressure sensor from the fuel injection diverter rail.

• NOTE: If a new fuel rail pressure sensor is to be installed, a new fuel injection diverter rail and fuel rail pressure sensor must be installed as an assembly.

Install the fuel injection diverter rail.

- Do not fully tighten the fuel injection diverter rail retaining bolts at this stage.

**2.** Attach the fuel line.

- Remove and discard the blanking caps.

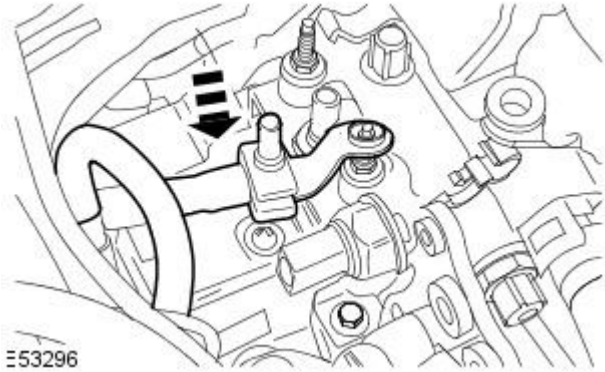


**3.** Connect the fuel line.

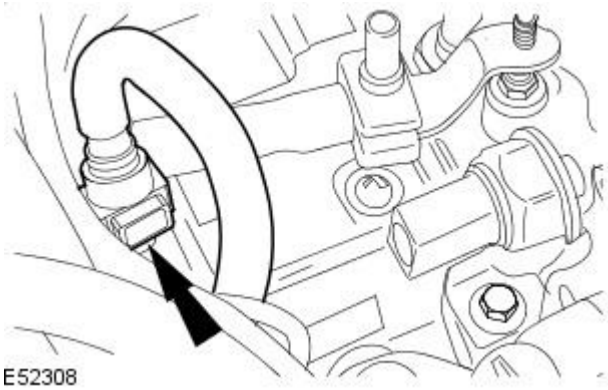


**4.** Connect the electrical connector.

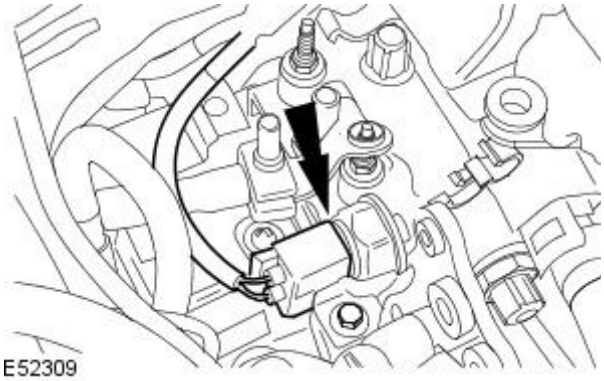


**5.** Attach the fuel line retaining nut.

- Tighten to 7 Nm.

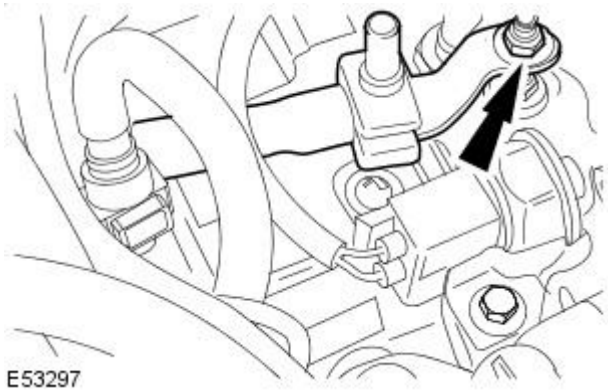


GETtheMANUALS.org

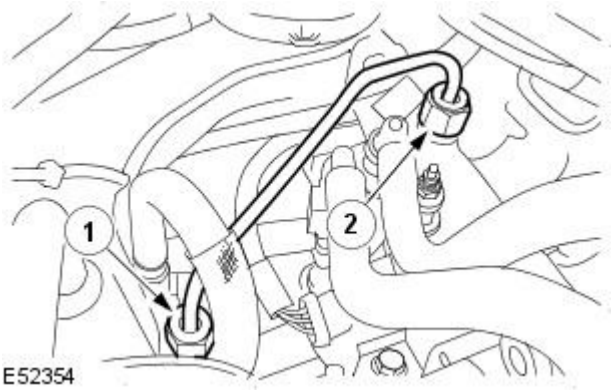


**6.** Install a new high pressure fuel supply line.

- Remove and discard the blanking caps.
- Install but do not tighten the high pressure fuel supply line.
- Tighten the fuel injection diverter rail retaining bolts to 23 Nm.
- Tighten the high-pressure fuel supply line in the sequence shown in four stages:
  1. Stage 1: Tighten the high-pressure fuel supply line union 1 to 15 Nm.
  2. Stage 2: Tighten the high-pressure fuel supply line union 2 to 15 Nm.
  3. Stage 3: Tighten the high-pressure fuel supply line union 1 to 30 Nm.
  4. Stage 4: Tighten the high-pressure fuel supply line union 2 to 30 Nm.

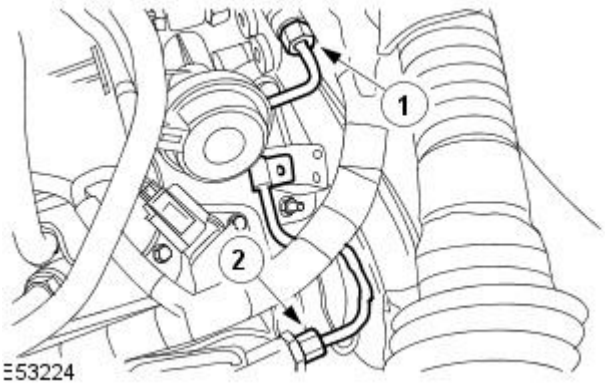


**7.** NOTE: Left-hand shown, right-hand similar.

Install new high pressure fuel supply lines.

- Remove and discard the blanking caps.
- Tighten the high-pressure fuel supply line in the sequence shown in four stages:
  1. Stage 1: Tighten the high-pressure fuel supply line union 1 to 15 Nm.
  2. Stage 2: Tighten the high-pressure fuel supply line union 2 to 15 Nm.
  3. Stage 3: Tighten the high-pressure fuel supply line union 1 to 30 Nm.
  4. Stage 4: Tighten the high-pressure fuel supply line union 2 to 30 Nm.

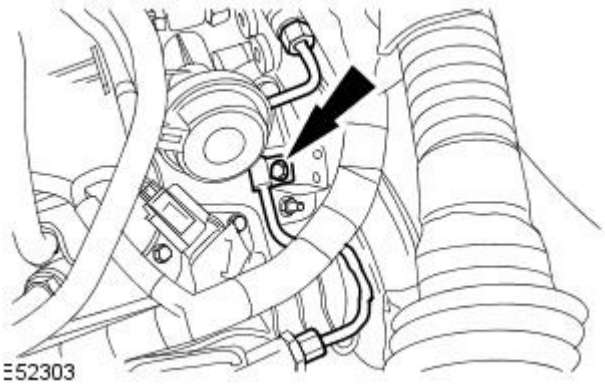


**8.** NOTE: Left-hand shown, right-hand similar.

Attach the high pressure fuel supply line clamps.

- Tighten to 10 Nm.

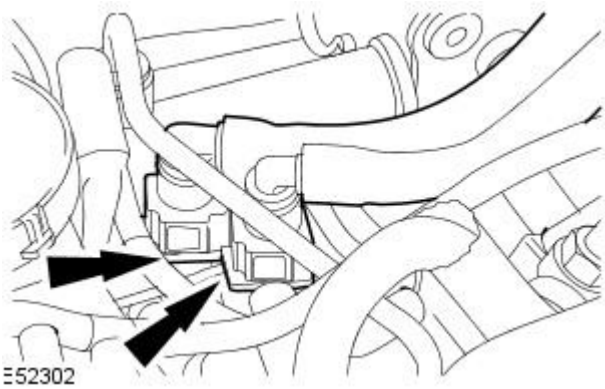


**9.** Connect the low pressure fuel inlet and return lines.
For additional information, refer to: Quick Release Coupling - Push Connect (310-00 Fuel System - General Information, General Procedures).

- Remove and discard the blanking caps.

GETtheMANUALS.org

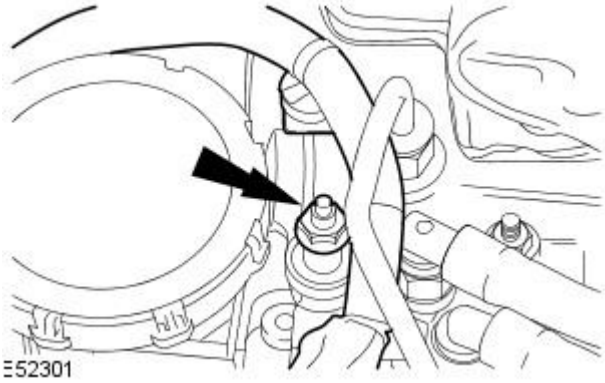


**10.** Attach the wiring harness retaining nut.

- Tighten to 7 Nm.

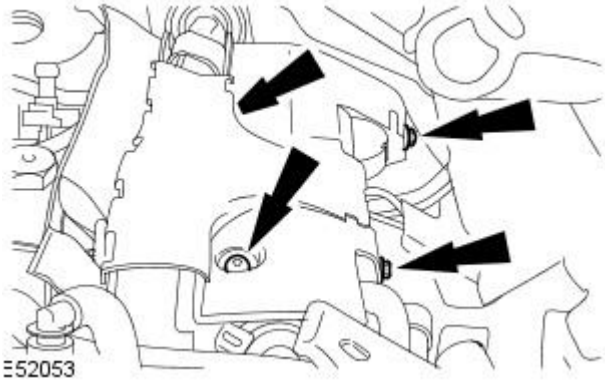


**11.** Install the engine harness retaining bolts.

- Tighten to 4 Nm.

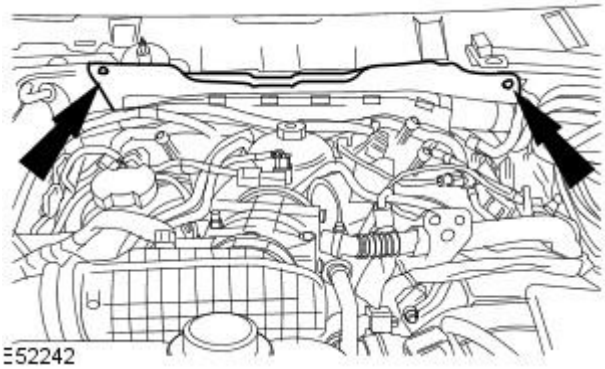


**12.** Install the engine compartment access panel.

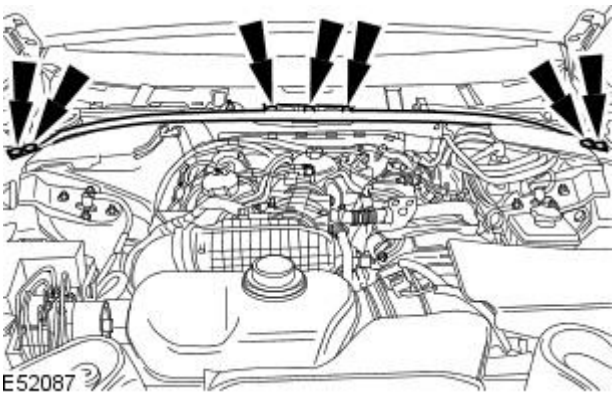


**13.** Install the engine compartment support.

**14.** Install the fuel injector soundproofing.

**15.** Install the engine cover.

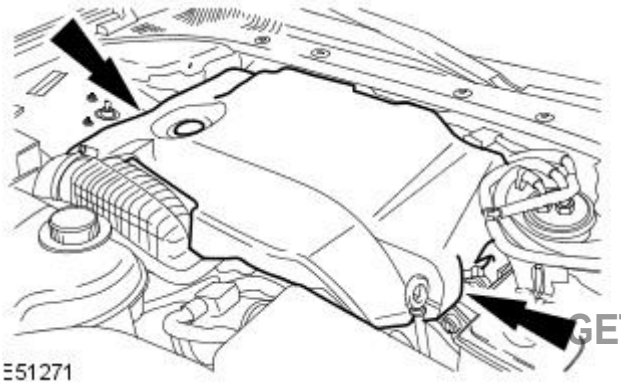


GETtheMANUALS.org

**16.** Install the oil filler cap.

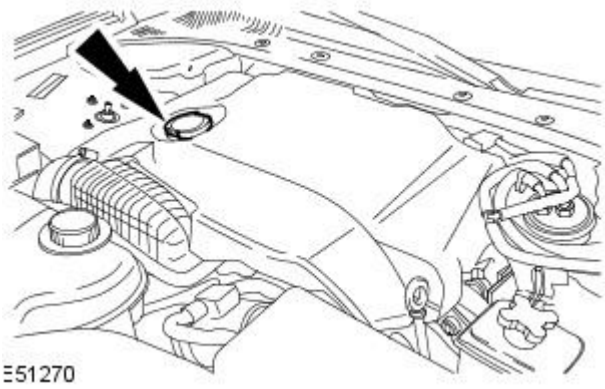


GETtheMANUALS.org

# Electronic Engine Controls - 2.7L V6 - TdV6 - Fuel Temperature Sensor

Removal and Installation

## Removal

WARNING: Do not smoke or carry lighted tobacco or open flame of any type when working on or near any fuel related components. Highly flammable mixtures are always present and may ignite. Failure to follow these instructions may result in personal injury.

This procedure involves fuel handling. Be prepared for fuel spillage at all times and always observe fuel handling precautions. Failure to follow these instructions may result in personal injury.

Do not carry out any repairs to the fuel injection system with the engine running. The fuel pressure within the system can be as high as 1600 bar. Failure to follow this instruction may result in personal injury.

Do not carry out any repairs to the fuel injection system without checking that the fuel pressure has dropped to zero. Failure to follow this instruction may result in personal injury.

Wait at least one minute after the engine stops before commencing any repair to the fuel injection system. Failure to follow this instruction may result in personal injury. CAUTIONS:

CAUTION: Make sure the workshop area in which the vehicle is being worked on is as clean and as dust free as possible. Foreign matter from work on clutches, brakes or from machining or welding operations can contaminate the fuel system and may result in later malfunction.

Always carry out the cleaning process before carrying out any repairs to the fuel injection system components. Failure to follow this instruction may result in foreign matter ingress to the fuel injection system.

Diesel fuel injection equipment is manufactured to very precise tolerances and fine clearances. It is therefore essential that absolute cleanliness is observed when working with these components. Always install blanking plugs to any open orifices or lines.

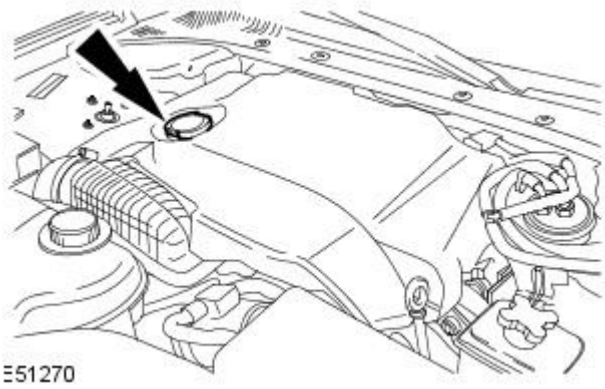


**1.** Remove the oil filler cap.

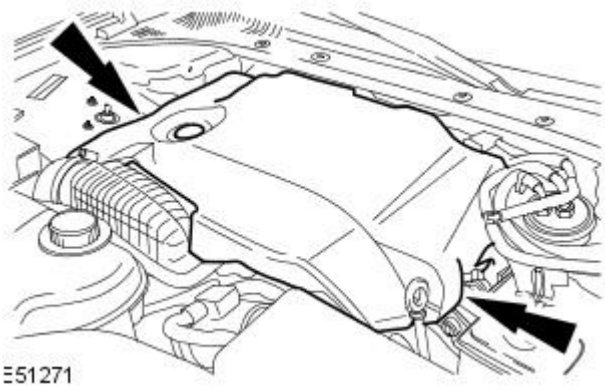


**2.** Remove the engine cover.

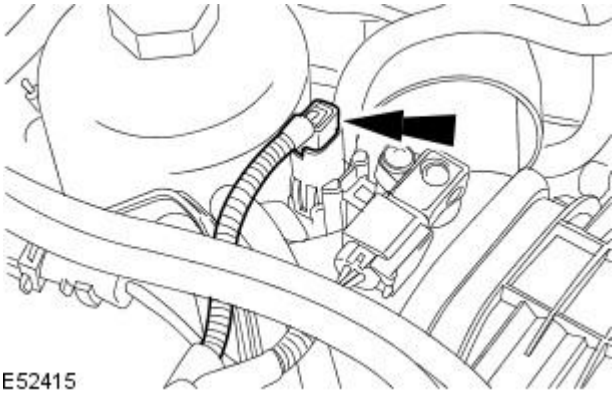


**3.** Disconnect the fuel temperature sensor electrical connector.

GETtheMANUALS.org

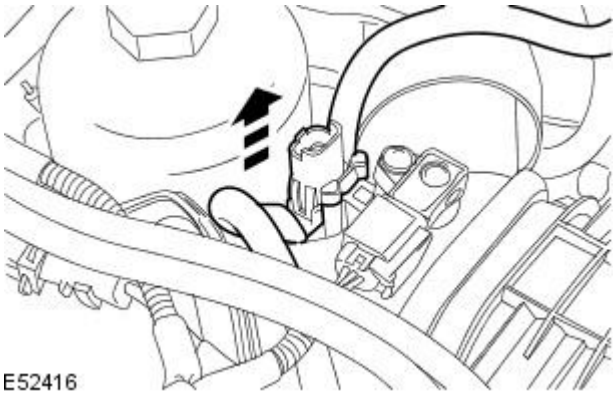


**4.** CAUTION: Do not use excessive force when detaching the fuel return line from the retaining bracket. Failure to follow this instruction may result in damage to the fuel return line.

To gain access to the locking tangs, detach the fuel return line from the retaining bracket and position to it one side.

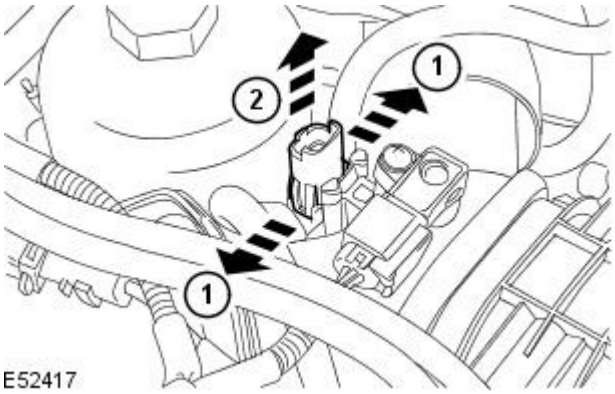


**5.** CAUTION: Do not use excessive force when releasing the fuel temperature sensor locking tangs. Failure to follow this instruction may result in damage to the fuel temperature sensor.

Remove the fuel temperature sensor.

1. Release the locking tangs.
2. Remove the fuel temperature sensor from the fuel return line.

- Install a clean blanking plug to the fuel return line.
- Discard the O-ring seal.

## Installation

WARNING: Do not smoke or carry lighted tobacco or open flame of any type when working on or near any fuel related components. Highly flammable mixtures are always present and may ignite. Failure to follow these instructions may result in personal injury.

This procedure involves fuel handling. Be prepared for fuel spillage at all times and always observe fuel handling precautions. Failure to follow these instructions may result in personal injury.

Do not carry out any repairs to the fuel injection system with the engine running. The fuel pressure within the system can be as high as 1600 bar. Failure to follow this instruction may result in personal injury.

Do not carry out any repairs to the fuel injection system without checking that the fuel pressure has dropped to zero. Failure to follow this instruction may result in personal injury.

Wait at least one minute after the engine stops before commencing any repair to the fuel injection system. Failure to follow this instruction may result in personal injury. CAUTIONS:

CAUTION: Make sure the workshop area in which the vehicle is being worked on is as clean and as dust free as possible. Foreign matter from work on clutches, brakes or from machining or welding operations can contaminate the fuel system and may result in later malfunction.

Always carry out the cleaning process before carrying out any repairs to the fuel injection system components. Failure to follow this instruction may result in foreign matter ingress to the fuel injection system.

Diesel fuel injection equipment is manufactured to very precise tolerances and fine clearances. It is therefore essential that absolute cleanliness is observed when working with these components. Always install blanking plugs to any open orifices or lines.

• NOTE: Install a new O-ring seal and fuel temperature sensor.

**1.** NOTE: Remove and discard the blanking plug from the fuel return line.

To install, reverse the removal procedure.

GETtheMANUALS.org

# Electronic Engine Controls - 2.7L V6 - TdV6 - Knock Sensor (KS) LH

Removal and Installation

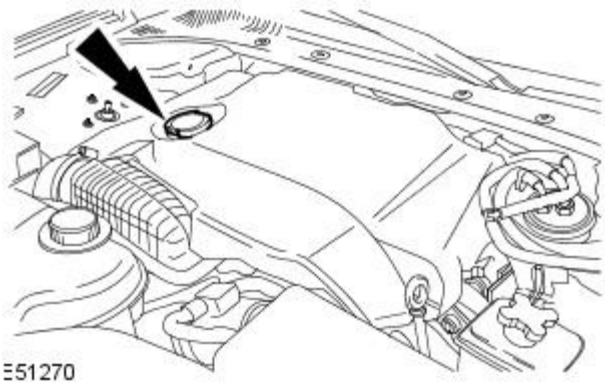


**1.** Remove the oil filler cap.

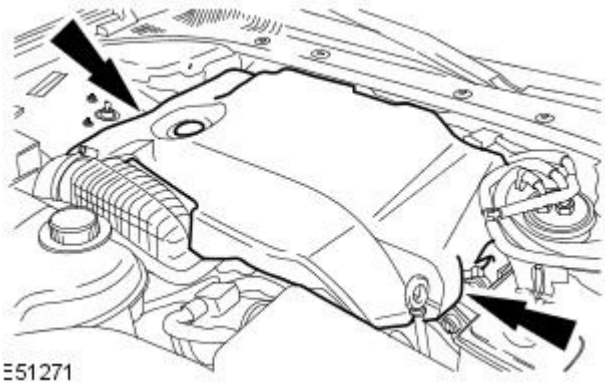


**2.** Remove the engine cover.

**3.** Remove the cowl panel grille.
For additional information, refer to: Cowl Panel Grille (501-02 Front End Body Panels, Removal and Installation).

**4.** Remove the engine compartment support.

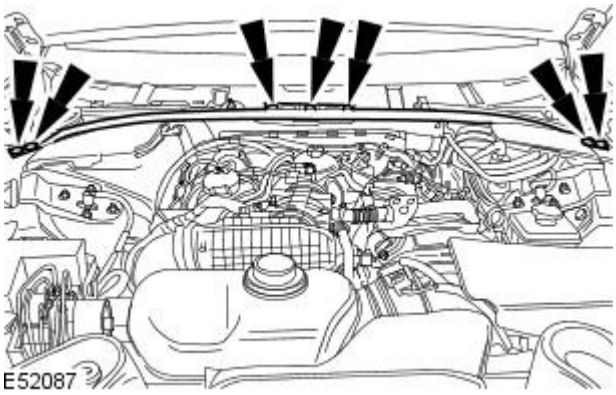


**5.** Remove the engine compartment access panel.

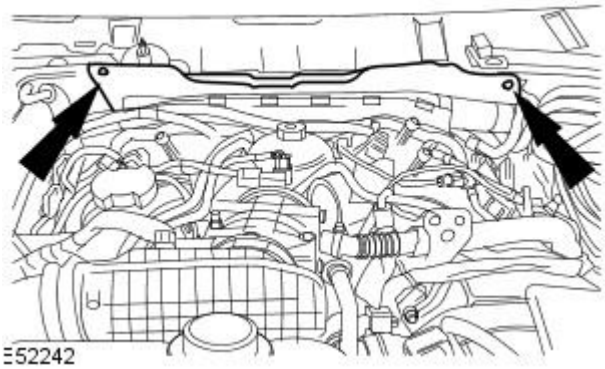


GETtheMANUALS.org

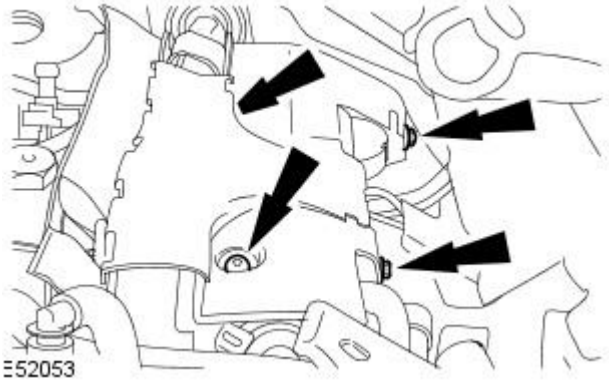


**6.** Remove the engine wiring harness retaining bolts and position the wiring harness to one side.

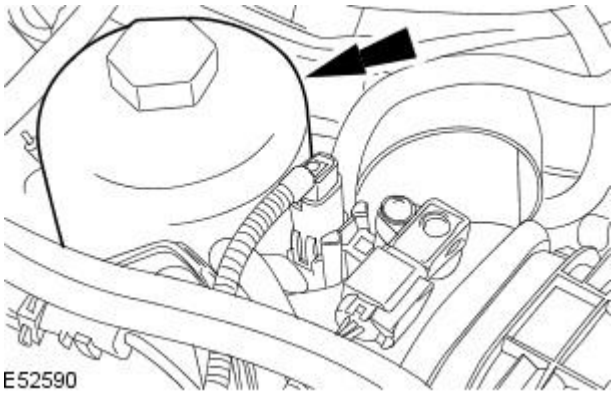


**7.** Remove the oil filter housing.

- Clean any oil spillage from the oil filter housing area.

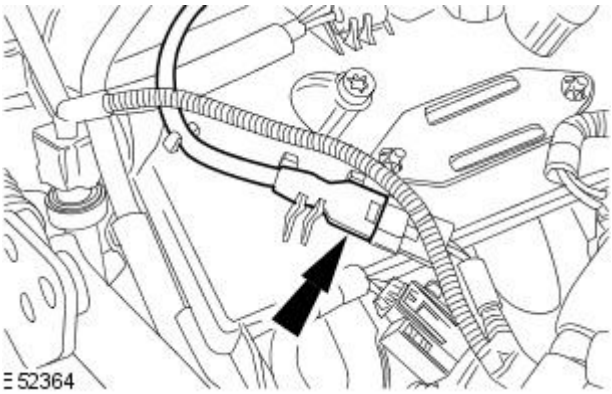


**8.** Disconnect the knock sensor (KS) electrical connector.

- Release the KS wiring harness from the retaining clips.

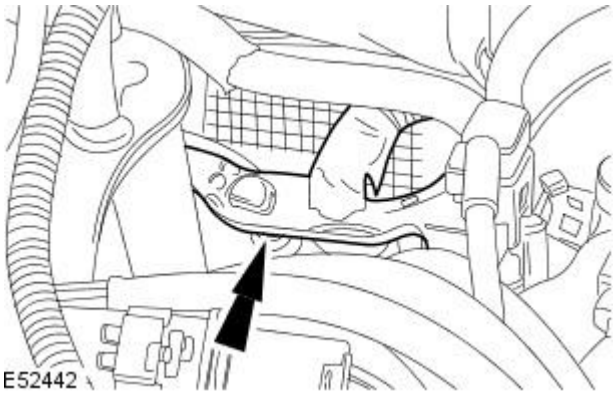


**9.** Disconnect the left-hand glow plugs electrical connector and position it to one side.

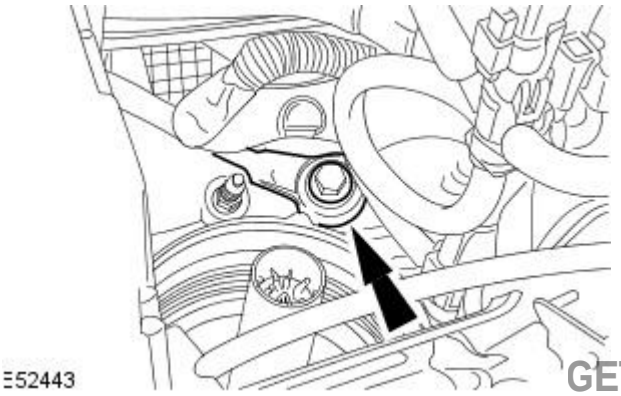


**10.** NOTE: Make a note of the orientation of the KS and make sure it is positioned in the same position when installed.

Remove the KS.

GETtheMANUALS.org

## Installation

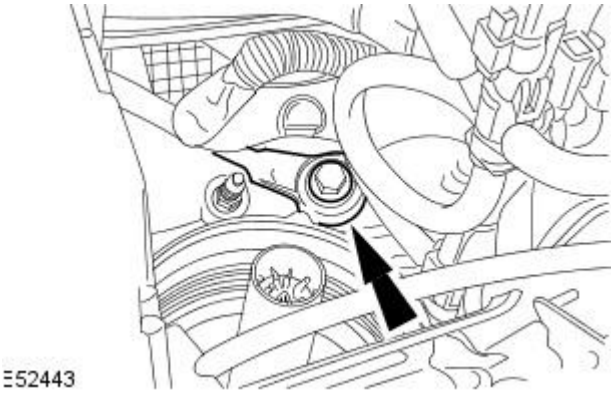


**1.** NOTE: Prior to installing the KS, clean the cylinder head and KS mating surfaces.

• NOTE: Make sure the KS is installed in the same position as removed.

To install, reverse the removal procedure.

- Tighten to 20 Nm.

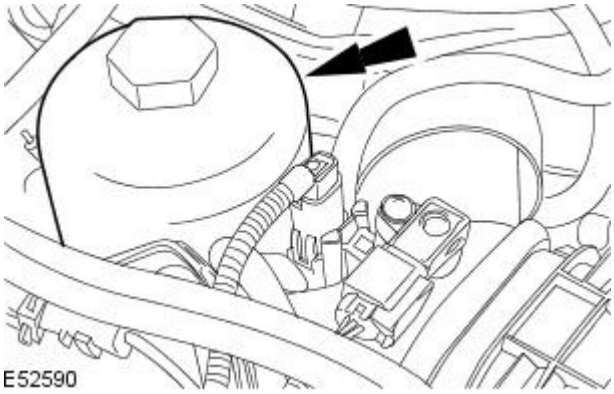


**2.** Tighten to 25 Nm.

GETtheMANUALS.org

# Electronic Engine Controls - 2.7L V6 - TdV6 - Knock Sensor (KS) RH

Removal and Installation

## Removal

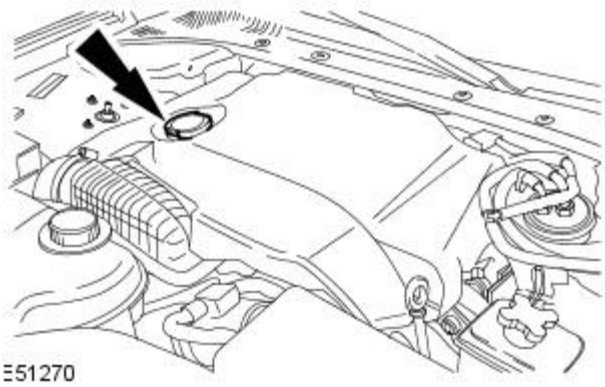


**1.** Remove the oil filler cap.

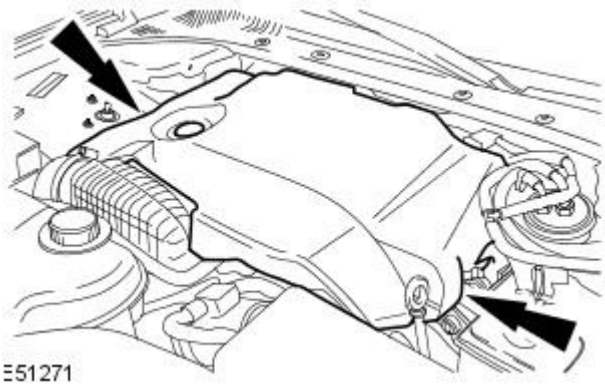


**2.** Remove the engine cover.

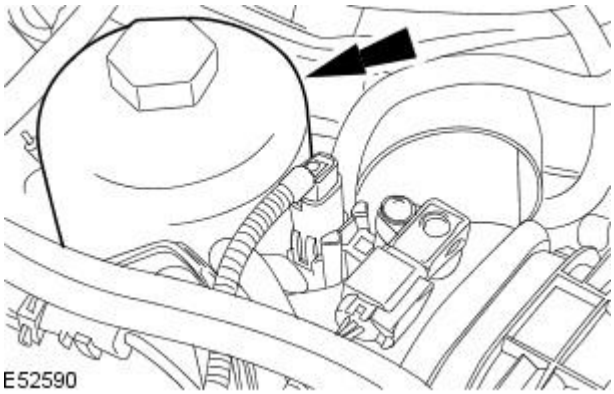


**3.** Remove the oil filter housing.

- Clean any oil spillage from the oil filter housing area.

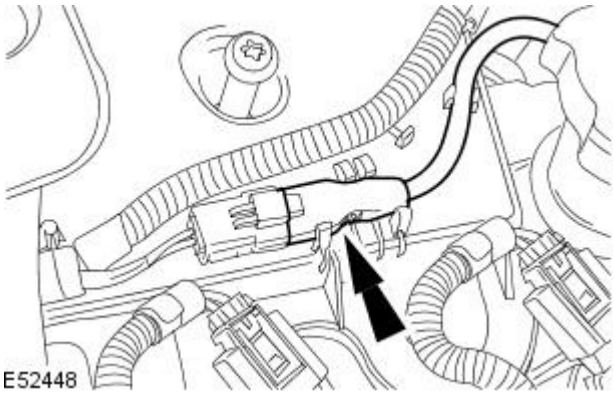


**4.** Disconnect the knock sensor (KS) electrical connector.

- Release the KS wiring harness from the retaining clips.

**5.** NOTE: Make a note of the routing of the KS wiring harness and make sure it is routed in the same position when installed.

Manoeuvre the KS wiring harness under the intake air shutoff throttle.

GETtheMANUALS.org

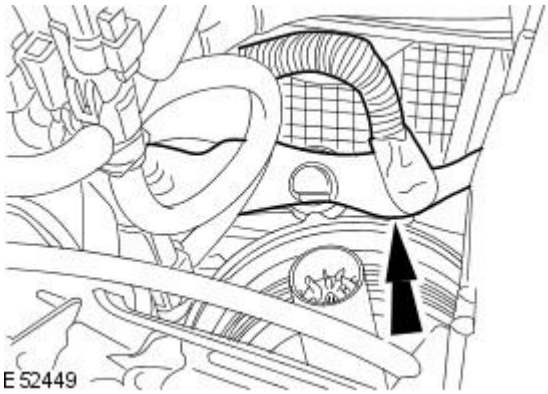


**6.** Disconnect the right-hand glow plugs electrical connector and position it to one side.

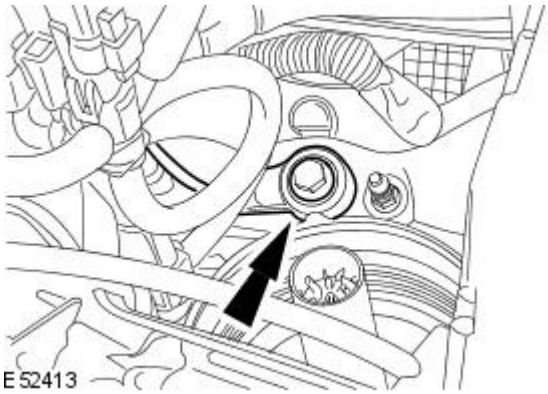


**7.** NOTE: Make a note of the orientation of the KS and make sure it is positioned in the same position when installed.

Remove the KS.

## Installation

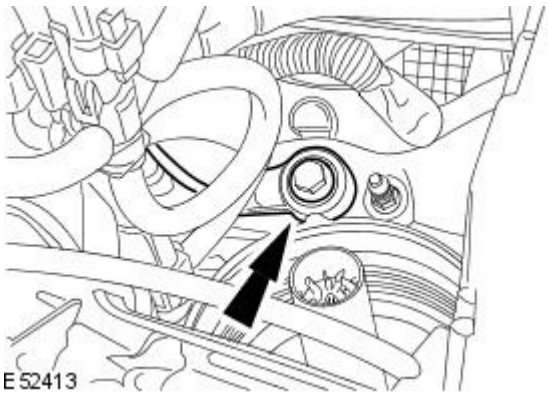


**1.** NOTE: Prior to installing the KS, clean the cylinder head and KS mating surfaces.

• NOTE: Make sure the KS is installed in the same position as removed.

To install, reverse the removal procedure.

- Tighten to 20 Nm.

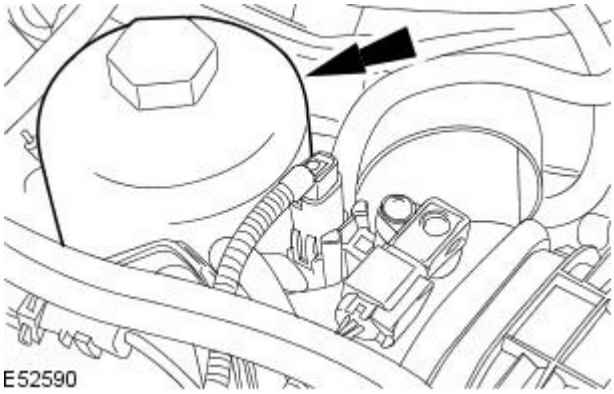


**2.** Tighten to 25 Nm.

GETtheMANUALS.org

# Electronic Engine Controls - 2.7L V6 - TdV6 - Manifold Absolute Pressure (MAP) Sensor

Removal and Installation

## Removal

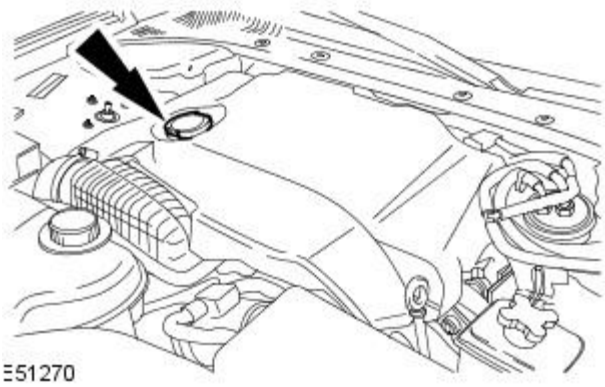


**1.** Remove the oil filler cap.

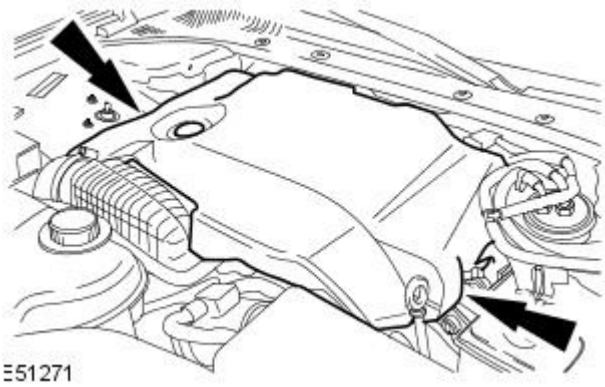


**2.** Remove the engine cover.

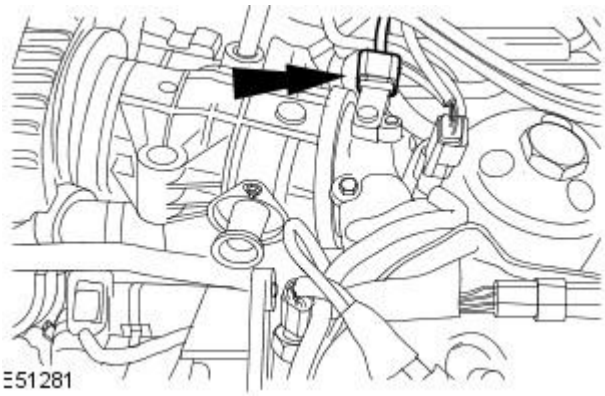


**3.** Disconnect the manifold absolute pressure (MAP) sensor electrical connector.

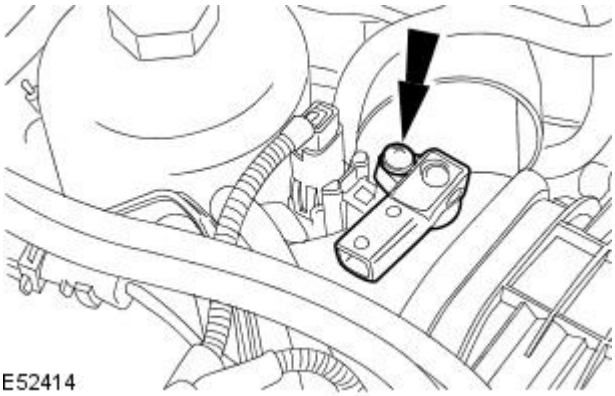


**4.** Remove the MAP sensor.

## Installation

GETtheMANUALS.org

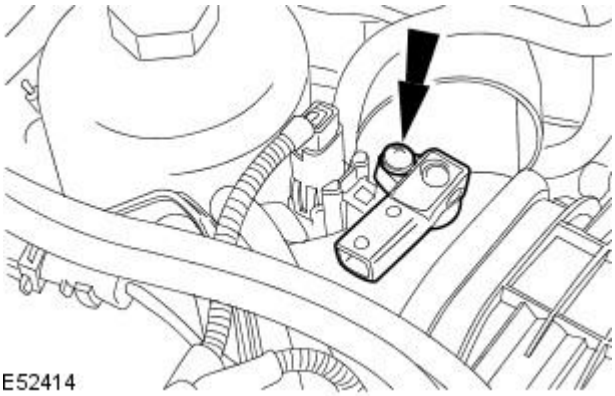


1. To install, reverse the removal procedure.
   - Tighten to 3 Nm.

GETtheMANUALS.org

# Electronic Engine Controls - 2.7L V6 - TdV6 - Mass Air Flow (MAF) Sensor

Removal and Installation

## Removal

• NOTE: This procedure is showing the lower mass air flow (MAF) sensor removal and installation. The upper MAF sensor removal and installation is similar.

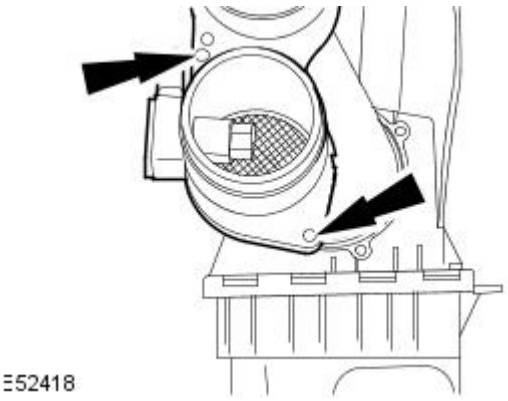


1. Remove the air cleaner.
   For additional information, refer to: Air Cleaner (303-12C Intake Air Distribution and Filtering - 2.7L V6 - TdV6, Removal and Installation).
2. Remove the MAF sensor.

## Installation

1. To install, reverse the removal procedure.
   - Tighten MAF sensor retaining screws to 2 Nm.

GETtheMANUALS.org

# Automatic Transmission / Transaxle -

**Fluid Maintenance**

CAUTION: Use only Shell M1375.4 Automatic transmission fluid. Use of any other fluids may result in a transmission malfunction or failure.

| Description | Intervals |
|---|---|
| Normal Maintenance | Not necessary. Filled for life. |
| Severe Duty Maintenance | Change the fluid at 48,000 km (30,000 miles) intervals. |

**Lubricants, Fluids, Sealers and Adhesives**

| Description | Specification |
|---|---|
| Transmission Fluid | Shell M1375.4 |
| Sealant | WSS-M4G323-A6 |
| Metal Surface Cleaner | WSW-M5B392-A |
| High Temperature Grease | Molecote FB180 |

**General Specifications**

| Vehicle | Engine | Approximate Liters | Refill Capacity [1] U.S. Quarts |
|---|---|---|---|
| S-Type | 2.5L and 3.0L | 10.0 | 10.57 |
| S-Type | 4.2L | 10.0 | 10.57 |
| S-Type | 2.7L Diesel | 10.0 | 10.57 |

1 Approximate dry capacity, includes cooler and tubes. Check the level at normal operating temperature. DO NOT OVERFILL. If it is necessary to add or change fluid, use only fluid which has been certified by the supplier as meeting the Jaguar Cars Ltd specification shown.

**Torque Specifications**

| Description | Nm | lb-ft | lb-in |
|---|---|---|---|
| Converter housing to engine retaining bolts | 48 | 35 | - |
| Transmission mount retaining bolts | 50 | 37 | - |
| Transmission fluid fill plug | A | A | A |
| Transmission control module (TCM) and Main control valve body retaining screws | 8 | - | 53 |
| Output shaft flange retaining nut | 60 | 44 | - |
| Torque converter retaining bolts | 55 | 41 | - |
| Transmission fluid cooler tube retaining bolt | 23 | 17 | - |
| Transmission fluid drain plug | 8 | - | 53 |
| Transmission fluid pan, gasket and filter retaining screws | 8 | - | 53 |
| A = refer to the procedure for correct torque sequence | | | |

GETtheMANUALS.org

# Automatic Transmission / Transaxle - Transmission Description

Description and Operation

The ZF 6HP26 automatic transmission has been developed for vehicles with an engine torque of up to 600 Newton-metres (Nm). This transmission uses planetary gears with hydraulic-electronic control. The transmission control module (TCM) and the main control valve body units form a composite element that is installed as a single unit inside the automatic transmission.

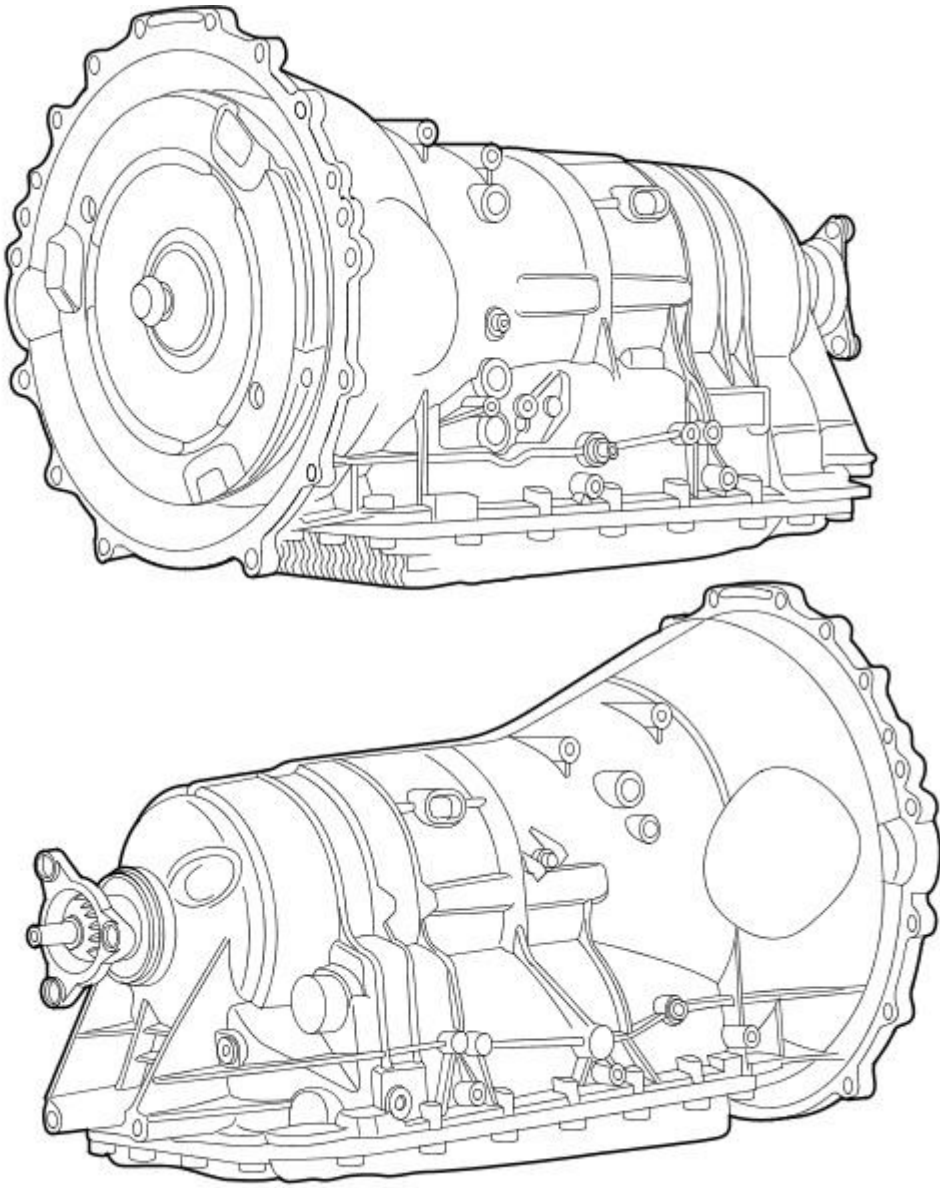

E30230

The 6HP26 has the following features:

- six forward speeds.
- a torque converter with an integral converter lock up clutch.
- electronic shift and pressure controls.
- a single planetary gear set.
- a double planetary gear set.
- two fixed multi-disc brakes.
- three multi-plate clutches.

All hydraulic functions are directed by electronic solenoids to control:

- engagement feel.
- shift feel.
- shift scheduling.
- modulated torque converter clutch (TCC) applications.
- engine braking utilizing the coast clutch.

Engine power reaches the transmission by a torque converter with integral converter lock up clutch. The 6 forward gears and 1 reverse gear are obtained from a single planetary set followed by a double planetary set also known as lepelletier-type gear sets, these gear sets make it possible to obtain 6 forward gears.

The 6HP26 Automatic Transmission is a six speed electronically controlled transmission comprising the basic elements of a TCM and main control valve body unit, a torque converter, one solenoid valve and six pressure regulators. Gear selection is achieved by the control of Automatic Transmission Fluid (ATF) flow to operate various internal clutches. The TCM operates the electrical components and provides for the control of gear selection shift pressure which increases refinement and torque converter slip control.

In the event of a system fault the TCM also provides for Failure Mode Effect Management (FMEM) to maintain maximum functional operation of the transmission with a minimum reduction in driver, passenger or vehicle safety. In the event of a total loss of control or electrical power the basic transmission functions Park, Reverse, Neutral and Drive are retained. Also 3rd or 5th gear is retained by the hydraulic system, the gear retained is dependant upon the gear selected at time of the failure.

CERTIFIEDMANUALS.com

The transmission also contains turbine and output shaft speed sensors, an internal P, R, N, D selector shaft position sensor, and a transmission fluid temperature sensor. The TCM also requires information from the J-Gate to determine when the driver has initiated manual gear selection. The TCM communicates with other electronic control modules by the controller area network (CAN).

The TCM also provides for legislated transmission diagnostics, which meet the requirements of CARB OBDII legislation, monitoring all components, which may effect vehicle emissions. Additional diagnostic functions are also supported to ensure fast repairs of all failures in the service environment.

## Upshifts

Transmission upshifting is controlled by the TCM. The TCM receives inputs from various engine or vehicle sensors and driver demands to control shift scheduling, shift feel and torque converter clutch (TCC) operation.

The TCM has an adaptive learn strategy to electronically control the transmission which will automatically adjust the shift feel.

## Downshifts

Under certain conditions the transmission will downshift automatically to a lower gear range (without moving the gearshift lever). There are three categories of automatic downshifts, coastdown, torque demand and forced or kickdown shifts.

## Coastdown

The coastdown downshift occurs when the vehicle is coasting down to a stop.

## Torque Demand

The torque demand downshift occurs (automatically) during part throttle acceleration when the demand for torque is greater than the engine can provide at that gear ratio. If applied, the transmission will disengage the TCC to provide added acceleration.

## Kickdown

For maximum acceleration, the driver can force a downshift by pressing the accelerator pedal to the floor. A forced downshift into a lower gear is possible below calibrated speeds. Specifications for downshift speeds are subject to variations due to tire size and engine and transmission calibration requirements.

## Range Selection

Depending on the vehicle options selected the transmission range selector may have different range positions.

The standard range selector has eight positions: P, R, N, D, 5, 4, 3 and 2.

J-Gate Range Selection

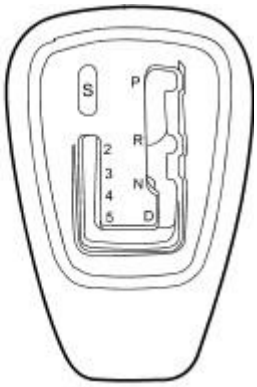


E30231

## "P"

In the PARK position:

- there is no power flow through the transmission.
- the parking pawl locks the output shaft to the case.
- the engine may be started.
- the ignition key may be removed.

## "R"

In the REVERSE position:

- the vehicle may be operated in a rearward direction, at a reduced gear ratio.
- backup lamps are illuminated.

## "N"

In the NEUTRAL position:

- there is no power flow through the transmission.
- the output shaft is not held and is free to turn.
- the engine may be started.

## "D"

DRIVE is the normal position for most forward driving.

GETtheMANUALS.org

The D position provides:

- automatic shift 1-6 and 6-1.
- apply and release of the torque converter clutch.
- maximum fuel economy during normal operation.
- engine braking in 6th gear.

### "5"

The 5 position provides:

- automatic shift 1-5 and 5-1.
- apply and release of the torque converter clutch.
- engine braking in 5th gear.

### "4"

The 4 position provides:

- automatic shift 1-4 and 4-1.
- apply and release of the torque converter clutch.
- engine braking in 4th gear.

### "3"

The 3 position provides:

- automatic shift 1-3 and 3-1.
- engine braking in 3rd gear.

### "2"

The 2 position provides:

- automatic shift 1-2 and 2-1.
- engine braking in 2nd gear.

### "S"

The sport mode switch:

- allows the driver to select or de-select the automatic transmission sport mode.
- allows the automatic transmission to operate normally when the sport mode is selected, but under acceleration the gear shift points are extended to make full use of the engine's power reserves.
- allows the driver to drive the vehicle in the "D" position with the full automatic transmission shift or manually shift gears in the "second, third, fourth and fifth" positions.
- is illuminated when Sport mode is selected.
- communicates with the TCM through the CAN network to show the sport mode switch status.

## Torque converter

The torque converter is a three element unit containing a single plate lock up clutch. The lock up clutch can be controlled and engaged in any gear 1 to 6. The clutch is applied by removing transmission fluid pressure from one side of the plate. The torque converter transmits and multiplies torque. The torque converter is a three-element device:

- impeller assembly
- turbine assembly
- reactor assembly

The standard torque converter components operate as follows:

- The impeller, which is driven by the engine, imparts a circular flow to the transmission fluid in the converter.
- This transmission fluid strikes the turbine wheel, which causes the flow to change its direction.
- The transmission fluid flows out of the turbine wheel close to the hub and strikes the stator, where its direction is changed again to a direction suitable for re-entering the impeller.
- The change in direction at the stator generates a torque reaction that increases the torque reaching the turbine.
- The ratio between turbine and impeller torque is referred to as torque multiplication or conversion.
- The greater the difference in speeds of rotation at the impeller and turbine, the greater the increase in torque; The maximum increase is obtained when the turbine wheel is stationary. As turbine wheel speed increases, the amount of torque multiplication gradually drops.
- When the turbine wheel is rotating at about 85 % of the impeller speed, torque conversion reverts to 1, that is to say torque at the turbine wheel is no higher than the torque at the impeller.
- The stator, which is prevented from rotating backwards by a freewheel and the shaft in the transmission housing, runs freely in the transmission fluid flow and overruns the freewheel. From this point on, the converter acts only as a fluid coupling. During the torque conversion process, the stator ceases to rotate and bears against the housing by the freewheel.

Torque converter

GETtheMANUALS.org

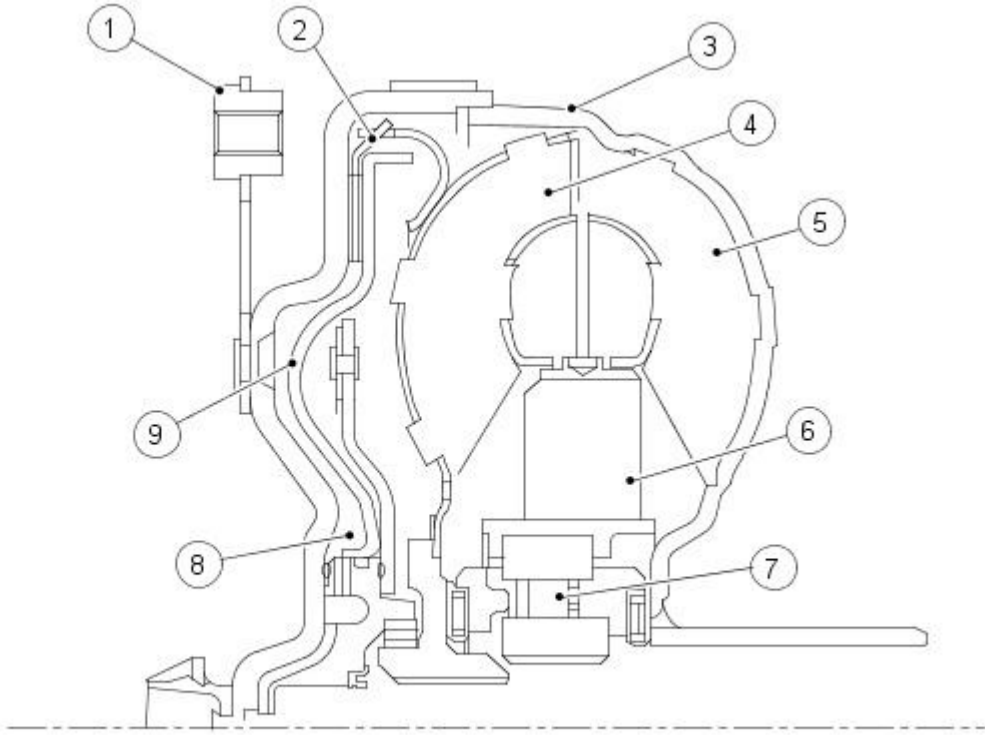


E31501

| Item | Part Number | Description |
|---|---|---|
| 1 | - | Torque converter retaining plate |
| 2 | - | Lock-up clutch lined plate |
| 3 | - | Torque converter cover |
| 4 | - | Turbine |
| 5 | - | Impeller |
| 6 | - | Stator |
| 7 | - | Stator freewheel |
| 8 | - | Space behind lock-up clutch |
| 9 | - | Lock-up clutch piston |

### Torque Converter Lock-up Clutch

The torque converter lock-up clutch is a device that eliminates slip in the torque converter and therefore helps to keep fuel consumption to a minimum.

The torque converter lock-up clutch is engaged and released by the control system. During the actuating phase, a slight difference is selected between the impeller and turbine wheels.

Pressure at the torque converter lock-up clutch piston is determined by an electronic pressure control valve.

The torque converter lock-up clutch can be controlled and engaged in any gear from 1 to 6. When decoupling takes place the actuating clutch A in the transmission is dependent on load and output speed.

When the torque converter lock-up clutch is released, transmission fluid pressures behind the lock-up clutch piston turbine area are equalized. The direction of flow is through the turbine shaft and the area behind the piston into the turbine area.

To engage the torque converter lock-up clutch the direction of transmission fluid flow is changed and reversed by a valve in the hydraulic control unit. At the same time the space behind the torque converter lock-up clutch piston is vented.

Oil pressure extends from the turbine area to the torque converter lock-up clutch piston and presses it against the cover outer shell of the torque converter. This locks the turbine wheel by way of the lined disc between the piston and the cover and enables the drive to pass with limited slip to the planetary gear train in normal operating conditions.

## Geartrain

Power is transmitted from the torque converter to the planetary gearsets through the input shaft. Clutches are used to hold and drive certain combinations of gearsets. This results in six forward ratios and one reverse ratio, which are transmitted to the output shaft and differential.

**Gear Ratio**

| Gear | ratios |
|---|---|
| 1st | 4.17:1 |
| 2nd | 2.34:1 |
| 3rd | 1.52:1 |
| 4th | 1.14:1 |
| 5th | 0.87:1 |
| 6th | 0.69:1 |
| Rev | 3.40:1 |

### Single Planetary Gearset

The single planetary gear overdrive carrier is driven by the input shaft.

The single planetary gear set consists of:

GETtheMANUALS.org

- 1 sunwheel

- 4 planetary gears meshing with the sunwheel
- 1 planetary gear carrier
- 1 ring gear

Single Planetary Gearset

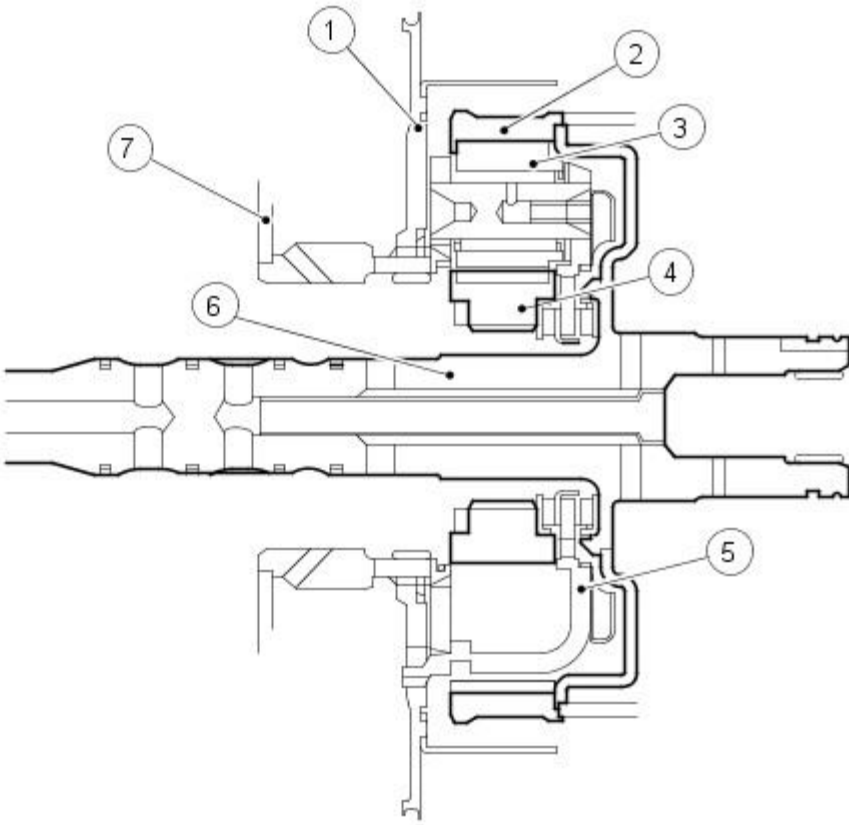


E31213

| Item | Part Number | Description |
|---|---|---|
| 1 | - | Baffle plate A |
| 2 | - | Ring gear |
| 3 | - | Planetary gear 1 |
| 4 | - | Sunwheel |
| 5 | - | Planetary gear spider |
| 6 | - | Turbine shaft |
| 7 | - | Cylinder A |

**Double Planetary Gearset**

The double planetary gearset is splined to the output shaft.

The double planetary gear set consists of:

- 2 sunwheels of different sizes
- 3 short planetary gears meshing with the sunwheels
- 3 long planetary gears meshing with the sunwheels
- 1 planetary gear carrier
- 1 ring gear

Double Planetary Gearset

**www.JagDocs.com**

GETtheMANUALS.org

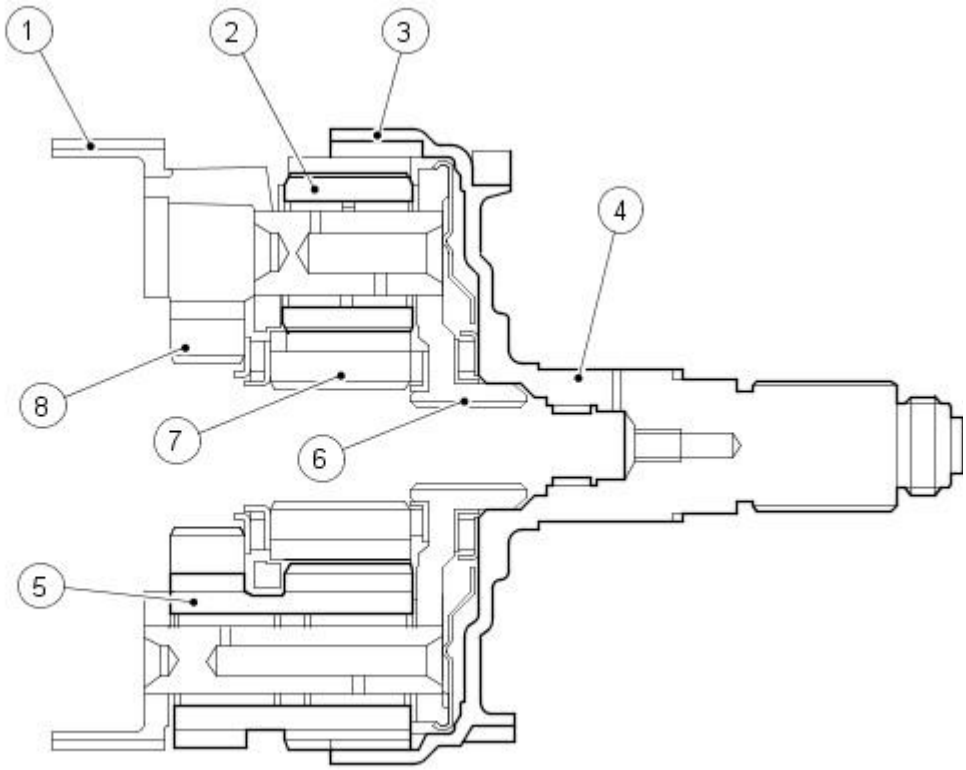


E31212

| Item | Part Number | Description |
|---|---|---|
| 1 | - | Planetary gear spider brake D |
| 2 | - | Planetary gears (short) |
| 3 | - | Ring gear 2 |
| 4 | - | Output |
| 5 | - | Double planetary gears (long) |
| 6 | - | Planetary gear spider clutch E |
| 7 | - | Sunwheel 3 clutch B |
| 8 | - | Sunwheel 2 clutch A |

## Apply Components

### Shift Elements

The other shift elements in addition to the torque converter lock-up clutch are:

- three rotating multi-plate clutches A, B and E.
- two fixed multi-disc brakes C and D.

All gear shifts from 1st to 6th or from 6th to 1st are power-on overlapping shifts, that is to say during the shift one of the clutches must continue to transmit the drive at lower main pressure until the other clutch is able to accept the input torque.

The shift elements, clutches or brakes are engaged hydraulically. The transmission fluid pressure is built up between the cylinder and the piston, this presses the clutch plates together.

When the transmission fluid pressure drops, the cup spring pressing against the piston moves it back to its original position.

The purpose of these shift elements is to perform in-load shifts with no interruption to traction.

Multi-plate clutches A, B and E supply power from the engine to the planetary gear train; multi-disc brakes C and D bear against the transmission housing in order to achieve a torque reaction effect.

Shift Elements

GETtheMANUALS.org

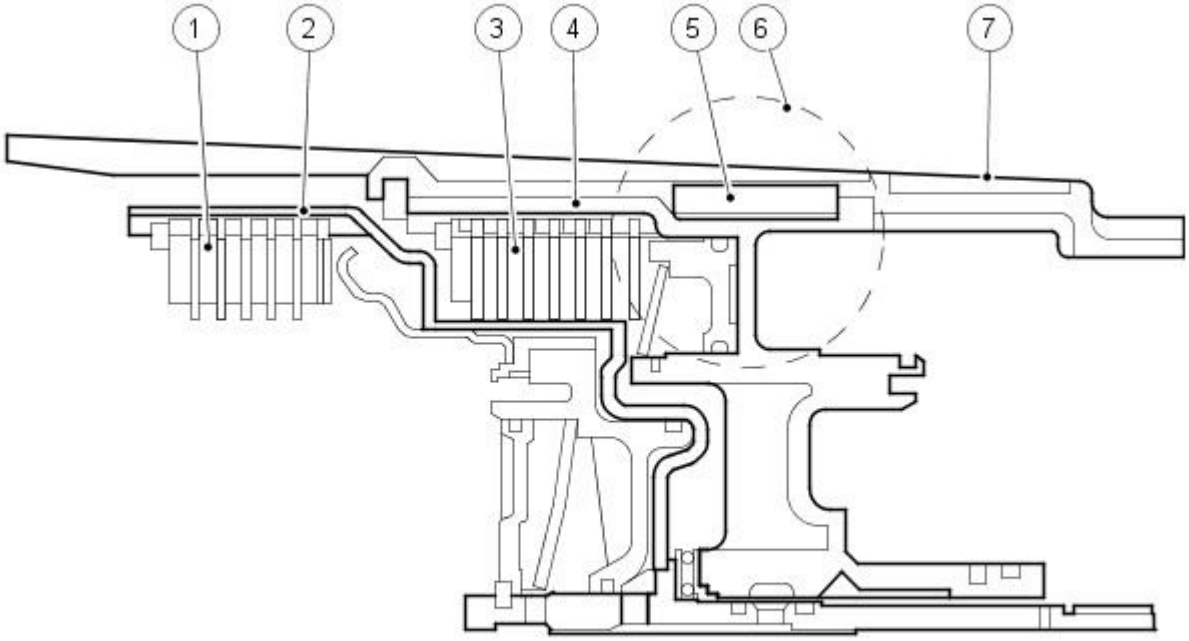


E31211

| Item | Part Number | Description |
|---|---|---|
| 1 | - | Multi-plate clutch B |
| 2 | - | Clutch cylinder B, outer plate carrier |
| 3 | - | Multi-disc brake C |
| 4 | - | Brake cylinder C, outer plate carrier |
| 5 | - | Shaft key |
| 6 | - | Brake cylinder C, outer plate carrier |
| 7 | - | Transmission housing |

## Multi Plate Clutch

Clutch E is equalized in terms of dynamic pressure, that is to say its piston is exposed to the transmission fluid flow on both sides, in order to prevent pressure build up in the clutch as the speed increases. This equalization process is achieved by a baffle plate and pressure-free transmission fluid supply by a lubricating passage, through which the space between piston and baffle plate is filled with transmission fluid.

The advantages of this dynamic pressure equalization are:

- reliable clutch engagement and release in all speed ranges.
- improved shift refinement.

Multi Plate Clutch

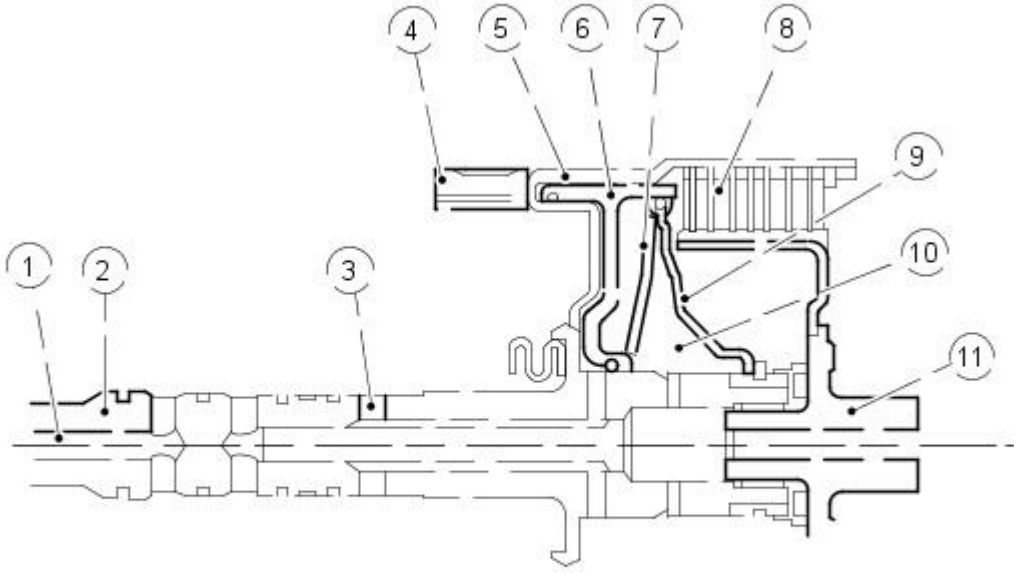


E31215

| Item | Part Number | Description |
|---|---|---|
| 1 | - | Lubricating transmission fluid passage |
| 2 | - | Turbine shaft |
| 3 | - | Main pressure supply to clutch E |
| 4 | - | Ring gear |
| 5 | - | Cylinder E |
| 6 | - | Piston E |
| 7 | - | Cup spring |

ICETtheMANUALS.org

| | | |
|---|---|---|
| 8 | - | Clutch plate cluster |
| 9 | - | Baffle plate |
| 10 | - | Space for dynamic pressure equalization |
| 11 | - | Inner plate carrier E |

### Shift overlap control

When overlap gearshift takes place, freewheels (one-way clutches) are not used but are replaced by suitable actuation of the relevant clutches. This both enables weight and space to be saved.

The electronic-hydraulic shift action is obtained by means of various valves in the transmission control module (TCM) and main control valve body, actuated by pressure regulators. They engage or disengage the relevant clutches or brakes at the correct moments.

Output is always by the ring gear of the second, downstream planetary gear set.

## Hydraulic System

### Fluid Pump

The fluid pump is of a "half-moon" pattern and delivers approximately 16 square cm of transmission fluid per revolution.

It is located between the torque converter and the transmission housing.

The torque converter is supported in the fluid pump by a needle roller bearing. The fluid pump is driven directly from the engine by the torque converter shell and supplies transmission fluid to the transmission and the hydraulic control unit.

The fluid pump draws in transmission fluid through a filter and delivers it at high pressure to the main pressure valve in TCM and main control valve body unit. This valve adjusts the pressure and returns excess transmission fluid to the fluid pan.

Fluid Pump

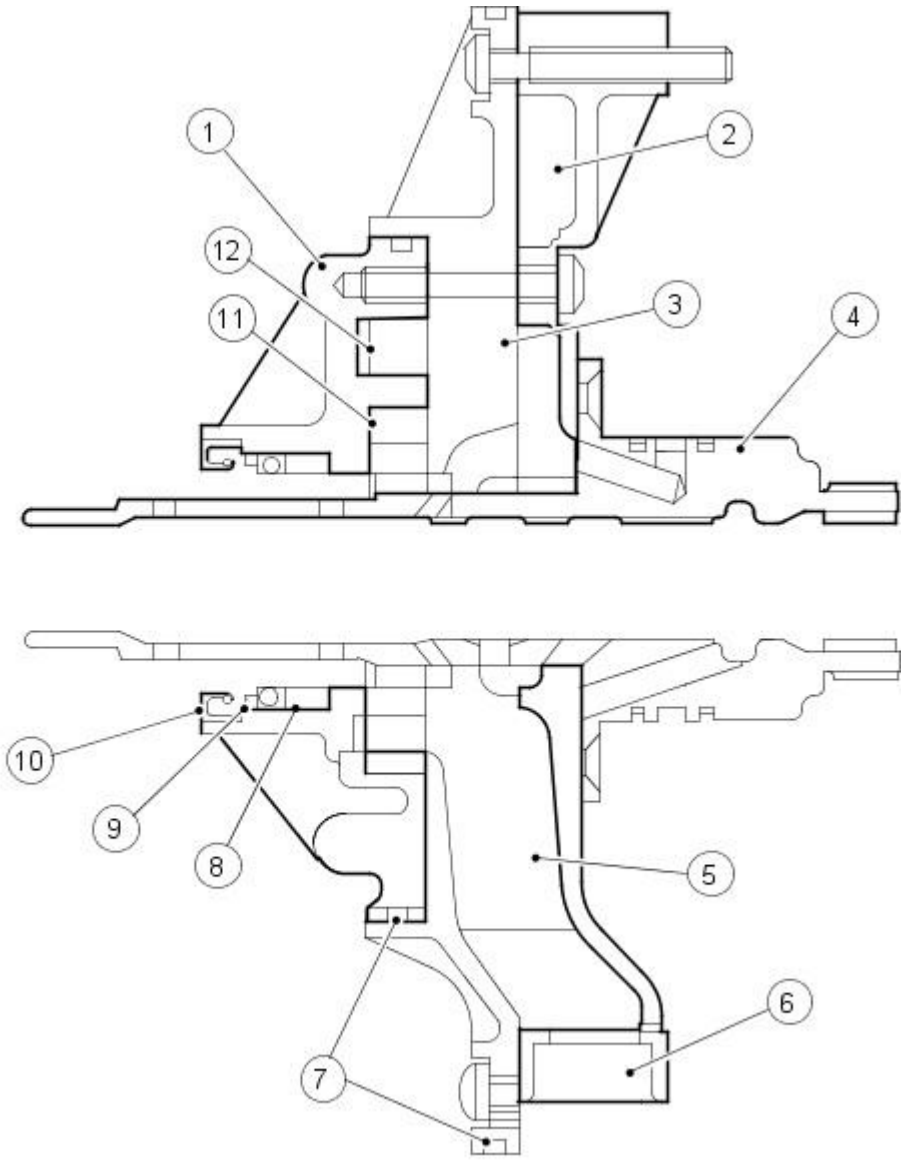


E31216

| Item | Part Number | Description |
|---|---|---|
| 1 | - | Fluid pump housing |
| 2 | - | Intermediate plate |
| 3 | - | Centring plate |
| 4 | - | Stator shaft |
| 5 | - | Intake port |
| 6 | - | To mesh filter |
| 7 | - | Seal |
| 8 | - | Bearing |
| 9 | - | Retaining clip |

GETtheMANUALS.org

| | | |
|---|---|---|
| 10 | - | Shaft seal |
| 11 | - | Impeller |
| 12 | - | Ring gear |

### Fluid Pan, Gasket and Filter

The transmission fluid pan, gasket and filter is a one piece assembly, all transmission fluid is drawn from the transmission fluid pan by the fluid pump and passes through the fluid filter.

## Transmission Control Module (TCM) and Main Control Valve Body

### Electrostatic Discharge (ESD)

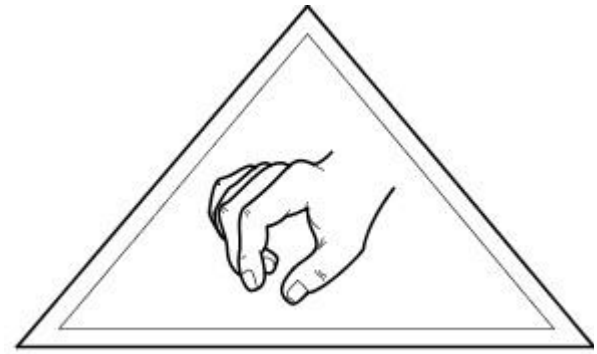

E31218

CAUTION: When working with the transmission control module (TCM) and main control valve body, all suitable safety precautions must be taken to protect the component against electrostatic discharge (ESD). Failure to follow these instructions may result in component damage.

Make sure all possible safety precautions are taken to protect the TCM and main control valve body unit against ESD.

Personal Wrist-Band Earthing

Earthing (grounding) by means of a wrist band or strap is the most reliable method of diverting electrostatic charges away from working personnel, and should therefore be used wherever possible, particularly if the person concerned is working while seated. The wrist band earthing (grounding) device consists of a bracelet closely attached to the wrist and a spiral earthing (grounding) cable connecting it to the earthing (grounding) contact point. This system must include a quick-release device so that the wrist can be released in the event of danger.

Shoes and Foot Earthing Straps

Electrically conductive shoes should be worn by persons who mainly work standing up or either standing or sitting in ESD protection zones, particularly if wrist band earthing (grounding) is impracticable. The standard calls for ESD shoes to record values between 0 and 35 Megga-ohms (MOhm) resistance. However, for antistatic working shoes resistance values between 0.1 and 1000 MOhm are called for, and a through-conducting resistance for protective shoes of 0.1 to 100 MOhm. A lower limit value of not less than 0.1 MOhm must be maintained on account of the contact voltage risk. For this reason the minimum value has been set contrary to the standard at the higher figure of 0.75 MOhm.

### Transmission Control Module (TCM) and Main Control Valve Body

The transmission control module (TCM) and main control valve body is a combination of hydraulic and electronic control units. Both these modules are installed in the transmission, in the fluid pan.

This technical principle has the following advantages:

- Minimum tolerances (TCM is mated to solenoids)
- Better coordination of gear shifts
- Increased refinement
- Optimized shift quality
- Good reliability, since the number of plug connections and interfaces is reduced.

Transmission Control Module (TCM) and Main Control Valve Body

GETtheMANUALS.org

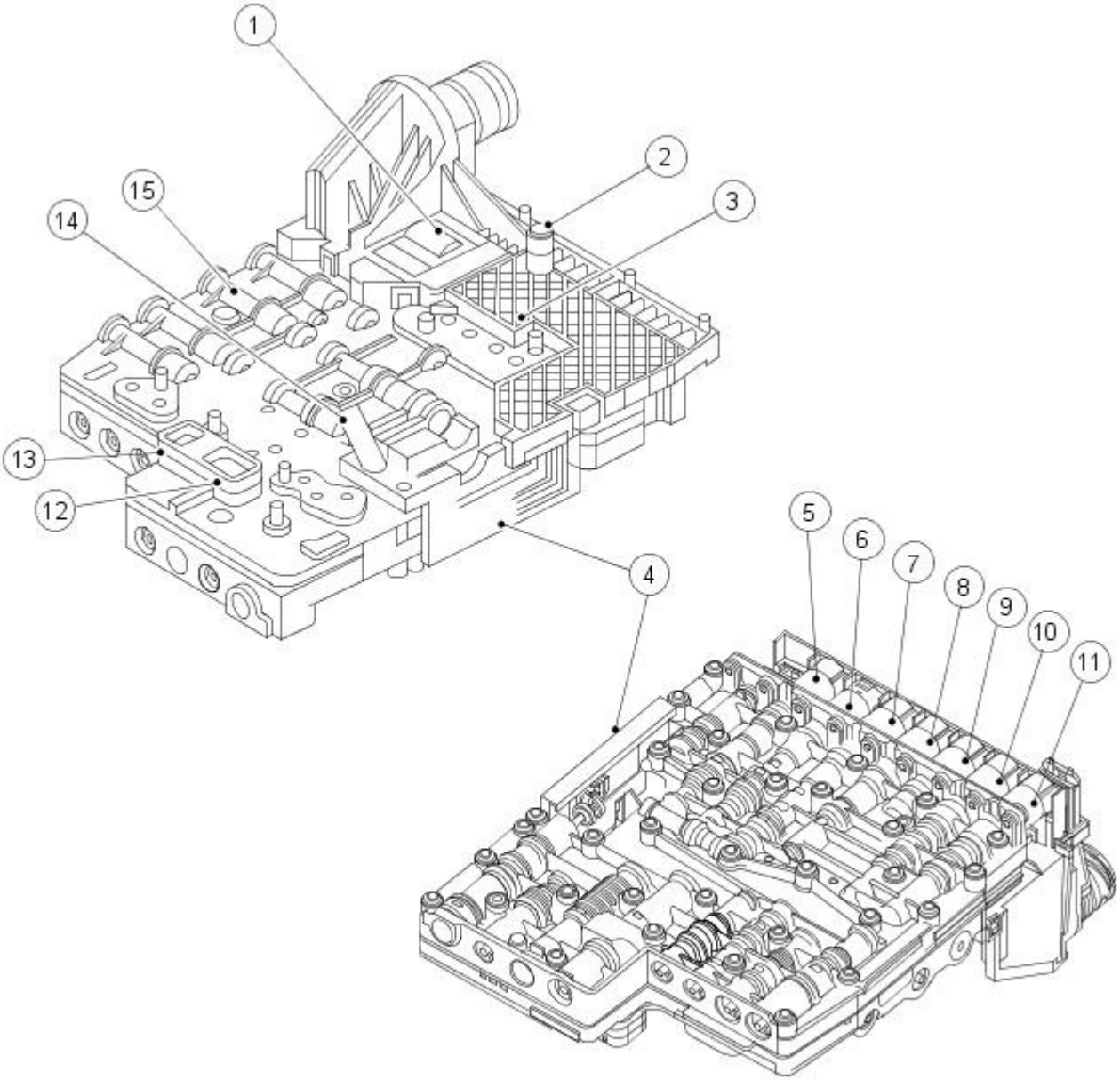


E31217

| Item | Part Number | Description |
|---|---|---|
| 1 | - | TCM |
| 2 | - | Output speed sensor |
| 3 | - | Transmission fluid temperature sensor |
| 4 | - | Position switch |
| 5 | - | Pressure regulator 6 |
| 6 | - | Solenoid valve |
| 7 | - | Pressure regulator 5 |
| 8 | - | Pressure regulator 4 |
| 9 | - | Pressure regulator 3 |
| 10 | - | Pressure regulator 2 |
| 11 | - | Pressure regulator 1 |
| 12 | - | Discharge port |
| 13 | - | Suction port |
| 14 | - | Turbine speed sensor |
| 15 | - | Main control valve body |

## Transmission Electronic System

The transmission control module (TCM) and its input/output network control the following transmission operations:

- shift timing.
- line pressure (shift feel).
- torque converter clutch.

In addition, the TCM receives input signals from certain transmission-related sensors and switches. The TCM also uses these signals when determining transmission operating strategy.

Using all of these input signals, the TCM can determine when the time and conditions are right for a shift, or when to apply or release the torque converter clutch. It will also determine the pressure needed to optimize shift feel. To accomplish this the TCM uses six pressure control solenoids and one shift solenoid to control transmission operation.

The following provides a brief description of each of the sensors and actuators used to control transmission operation.

GETtheMANUALS.org

**TCM**

The TCM for the transmission is mounted on top of the main control valve body. The control module for the transmission has been designed to operate correctly in the environment in which the TCM is located.

The transmission control module is activated and deactivated by the ignition supply and is connected to the transmission link harness by a 16-way connector.

The TCM controls the operation of the transmission. The TCM processes information received in both analogue and digital form such as:

- Transmission input speed
- Output speed
- Throttle pedal position
- Gear selector position
- Engine torque
- Engine speed
- Transmission fluid temperature
- Brake pedal status
- Engine oil temperature
- Coolant temperature
- ABS wheel speed

This information is then used by the TCM to decide which shift pattern to select and for shift energy management. Electro-hydraulic solenoid valves and pressure regulators control the transmission gear changes.

Five pressure regulators and one solenoid valve are used to control direct transmission fluid flow to select internal clutches and control the fluid pressure at the clutch. A separate pressure regulator is used exclusively for torque converter clutch control.

The TCM monitors all TCM inputs and outputs to confirm correct system operation. If a fault occurs the TCM is able to perform default action and inform the driver of the problem, this is by the instrument cluster message centre.

### Solenoids

The hydraulic module contains one solenoid valve. The solenoid valve is actuated by the TCM and has two positions of open or closed, it is used to switch the position valve.

There are six electronic pressure control valves, these convert an electric current into a proportional hydraulic pressure. They are energized by the TCM and actuate the valves belonging to the relevant switching elements.

### Controller Area Network (CAN) Interface

For the TCM to be able to perform shift point and shift quality management a number of external signals are required. For shift point management alone the TCM requires output speed sensor, throttle pedal position, brake pedal status and gear selector position. The controller area network (CAN) bus is used to share information between control modules. The TCM obtains most of its required data over the CAN bus from the electronic engine controls, J-Gate and ABS, Instruments pack and diagnostic tools.

### Brake Pedal Position (BPP) Switch

The brake pedal position (BPP) switch tells the TCM when the brakes are applied, and disengages torque converter clutch. The BPP switch closes when the brakes are applied and opens when they are released. The BPP is also used to disengage the brake shift interlock and stops gradient calculations.

### Engine Coolant Temperature (ECT) Sensor

The engine coolant temperature (ECT) sensor detects engine coolant temperature and supplies the information to the TCM. The ECT sensor is used to control the torque converter clutch (TCC) operation.

### Accelerator Pedal Position (APP) Sensor

The accelerator pedal position (APP) sensor is a potentiometer mounted on the accelerator pedal. The APP sensor detects the position of the accelerator pedal and sends this information to the electronic control module (ECM). The APP sensor is used for shift scheduling and TCC lock-up.

### Input Shaft Speed (ISS) Sensor

The input shaft speed (ISS) sensor is a Hall effect type sensor.

The ISS sensor is mounted internally on the transmission and is located on the TCM and main control valve body unit.

### Output Shaft Speed (OSS) Sensor

The output shaft speed (OSS) sensor is a Hall effect type sensor.

The OSS sensor is mounted internally on the transmission and is located on the TCM and main control valve body unit and is used for shift scheduling.

### Transmission Fluid Temperature (TFT) Sensor

The TCM utilizes one transmission fluid temperature sensor located on the main control valve body. The TCM uses the sensor input to activate various shift strategies. The sensor is in the form of a temperature dependent resistor.

The temperature sensor performs plausibility checks on each sensor reading. Obviously, the transmission oil temperature should not jump in value excessively between sensor readings. If the inputs from the temperature sensor are outside the working range it possible that the sensor is short or open circuit.

### Position sensor

The TCM uses the position of this switch housed on the TCM and main control valve body, to determine the selected gear range on the Automatic side of the selector lever.

The selector lever is connected to the transmission by a cable, which operates the transmission selector shaft between positions Park, Reverse, Neutral and Drive. The TCM detects the driver's choice of manual range selection (5,4,3,2) by means of a 3-bit code generated by the J-gate. This 3-bit code is then transformed in to a CAN message by the J-Gate module and transmitted on to the CAN bus where it is detected by the TCM.

GETtheMANUALS.org

**3-Bit Code**

| Position | 3-Bit Code | | |
|---|---|---|---|
| 2nd Gear | 0 | 1 | 0 |
| 3rd Gear | 0 | 1 | 1 |
| 4th Gear | 1 | 0 | 0 |
| 5th Gear | 1 | 0 | 1 |
| P, R, N, D | 1 | 1 | 1 |

The TCM uses this information to generate the CAN message "Gear Position Selected", which must not be confused with the similar message "Gear Position Actual" indicating the current mechanical gear ratio activated by the TCM.

Movement of the lever between Park, Reverse, Neutral and Drive manually controls the flow of transmission fluid, the TCM having control of the forward gear selected in Drive. Additional movement of the lever to 5,4,3 and 2 positions does not manually modify the fluid flow, the TCM detects these positions, and controls the gear selected electronically.

### Sport mode switch

The sport mode switch:

- Allows the driver to select or de-select the automatic transmission sport mode.
- Allows the automatic transmission to operate normally when the sport mode is selected, but under acceleration the gear shift points are extended to make full use of the engine's power reserves.
- Allows the driver to drive the vehicle in the "D" position with the full automatic transmission shift or manually shift gears in the "second, third, fourth and fifth" positions.
- Is illuminated when Sport mode is selected.
- Communicates with the TCM through the CAN network to show the sport mode switch status.

## TCM Monitoring Functions

As explained above the TCM monitors all input and outputs to identify possible failures. If a fault is detected the TCM takes the appropriate action to ensure the transmission enters a safe mode of operation, without sacrificing transmission durability or driver safety.

### Supply Monitoring

If the battery voltage is either too great or too low, the TCM will detect a fault condition. For the TCM to be able to identify this fault, the engine must be running and the transmission fluid temperature sensor must be functioning correctly.

### Solenoid Supply Monitoring

While the solenoid operating transistors are being activated, checks are run for open circuits, shorts circuits to ground and short circuits to supply. The monitoring function evaluates the voltage characteristics during the switch on process checking for the above faults.

All solenoid outputs are fully protected. The processor and the appropriate fail-safe action taken can quickly identify open and short circuit faults.

### Sensor Supply Monitoring

The sensor supply voltage is a stabilized supply. This supply is monitored by the micro-processor by an Analogue to Digital Converter (ADC). If the voltage is out of the valid tolerance a raise a diagnostic trouble code (DTC) is set and the appropriate fail-safe action is performed.

### Electronically Erasable Program Read Only Memory (EEPROM) Monitoring

To diagnose errors with the electronically erasable program read only memory (EEPROM) the TCM calculates 4 checksums continuously: If the processor identifies discrepancies in any of the four checksums the TCM will engage mechanical limp-home mode.

The TCM can diagnose errors within the EEPROM. Diagnosis is only performed during TCM initialization. There is no fail-safe mechanism associated with this function as the EEPROM is mainly used for the storage of fault codes and transmission calibration adaptions. If a fault occurs the TCM is able to perform default action and inform the driver of the problem, this is by the instrument cluster message centre.

### Watchdog Monitoring

The watchdog monitoring function has two functions. Firstly it checks that it is possible to inhibit output control by the activation of the solenoid supply transistor. Secondly the watchdog checks that the safety circuit is functioning correctly.

During initialization the watchdog checks that it is possible to inhibit control of the pressure regulator and solenoid valves by switching the solenoid supply transistor. There is a fault if activation of the solenoids cannot be inhibited by the watchdog (NB. The supply to the solenoids can still be inhibited by the high side switch responsible for control of each solenoid i.e. One safety path is lost).

### Monitoring the Substrate Temperature Sensor

The TCM is situated within the transmission on the valve body. As the TCM controls a number of high power solenoids and is surrounded by ATF, the TCM can obviously get very hot. If the temperature of the hardware rises above a pre-determined level the TCM will be shut down. Prior to the TCM shutting down the TCM will log a fault code, during shutdown the transmission will enter mechanical limp-home mode. Monitoring of the substrate temperature is performed by a temperature dependent resistor mounted on the processor.

### Plausibility Checking

The TCM detects a fault if an excessive voltage jump is identified between any two consecutive measurements. Also, with the engine started from cold the transmission fluid temperature will start to rise. Therefore the substrate or fluid temperature will also start to rise because the TCM is surrounded by transmission fluid. If the engine and output shaft speed is higher than a set threshold for a predetermined length of time without the substrate temperature rising above a set threshold a fault will be detected.

### Pressure Regulator / Solenoid Monitoring

Each pressure regulator and solenoid is monitored for open circuits and short circuits. The TCM also checks that the current being delivered to each solenoid valve or pressure regulator is within valid limits. When each solenoid is being driven with minimum current the TCM checks that the current is not above a threshold value. If a solenoid is being driven with maximum current, it checks that the current is not below a valid threshold. If either of these two errors occurs a plausibility error is logged and the appropriate fail-safe action is performed.

### Output Speed Monitor

GETtheMANUALS.org

It is possible for the TCM to diagnose electrical errors associated with the output speed sensor while the vehicle is stationary as well as

moving. Plausibility monitoring is performed on the sensor output when the vehicle is moving.

### Input Speed Monitor

It is possible for the TCM to diagnose electrical errors associated with the input shaft speed sensor while the vehicle is stationary as well as moving. Plausibility monitoring is performed on the sensor output when the vehicle is moving.

### Transmission Fluid Temperature Sensor Monitoring

The TCM monitors for faults associated with the transmission fluid temperature sensor in the following ways:

1. **1.** Open and short circuit fault detection.
2. **2.** The temperature cannot alter by more than a predefined differential between any two consecutive measurements.
3. **3.** The transmission fluid temperature must rise after the engine has been started provided that the fluid temperature was low enough to begin with (The vehicle must be driven and the diagnostic test condition met).

### Position Sensor Monitoring

The TCM can identify errors with the position switch located within the transmission. If an unrecognized position code is read by the TCM a plausibility fault will be logged. (A code is checked between positions).

The position switch outputs a 4-bit code to the TCM, the bits being labelled L1-L4. For the transmission, the following codes are used to identify the selector position.

Only for the automatic side of the J-GATE P,R,N,D

**Selector position switch code**

| Position | Code | | | |
|---|---|---|---|---|
| | L1 | L2 | L3 | L4 |
| Park | 0 | 0 | 1 | 0 |
| Reverse | 0 | 0 | 0 | 1 |
| Neutral | 0 | 1 | 0 | 0 |
| Drive | 1 | 1 | 1 | 0 |

### Gear Ratio Monitoring

The gear ratio diagnostic checks that each gear ratio is correctly engaged. Also, following a gear shift the diagnostic checks that the transmission has engaged the target gear within the allowed time.

### Torque Converter Monitoring

The TCM checks that the torque converter can be locked correctly. If torque converter lock-up does not occur correctly the TCM performs the appropriate fail-safe action of opening the Torque converter clutch.

### Torque Converter Lock-up Control

The TCM controls how the torque converter clutch is engaged as a function of the accelerator pedal position , output speed, transmission fluid temperature, gear selected and shift program. Lock-up is possible in all forward gears, but usually it is restricted to fourth, fifth and sixth gears. To make use of the comfort enhancing effect of the torque converter, the converter clutch can be disengaged prior to a downshift or up-shift. The torque converter lock up clutch is always modulated to allow for controlled slip, to further improve the shift quality.

### Shift Energy Management

This function involves reducing or increasing the engine output torque during shifting. The aim when up-shifting is to reduce the energy that is dissipated in the friction elements of the transmission. This is done by reducing the engine torque during synchronization without interrupting the tractive drive. This function may be used for:

- Increasing the transmission service life by shortening the slipping time.
- Improving the shift comfort by reducing the step change in torque caused by the gearshift.
- Transferring a higher engine power, this is allowed by the mechanical in-gear strength of the transmission.

Real-time control of engine torque is required to maintain maximum shift quality and transmission durability. The TCM has the ability to control the engine output torque during the gearshift to synchronize with the operation of the transmission clutches.

### Pressure Modulation

To provide a high level of shift comfort and durability, the hydraulic pressure in the shift related friction elements of the transmission must be matched very accurately to the transmission input torque. This hydraulic pressure is composed of a hydraulically pre-set basic pressure and a controlling pressure that is set by one of the electro-hydraulic pressure regulators.

The transmission input torque can be directly calculated from the following operating parameters: engine torque signals, engine speed or any signals transmitted from the ECM by CAN, and converter slip. Separate pressure characteristics for each gear change make it possible to adapt precisely to the particular shift operation. A further improvement in shift comfort is achieved by individual treatment of special cases, such as manual shifts.

### Shift Quality Adapts

The shift quality adapts are used to obtain a high quality and consistant shift feel. This is achieved through monitoring shift quality and then adapting the shift pressures and shift energy management to overcome hardware variability and "in service wear".

It will typically take a new transmission approximately 161 kilometers (100 miles) of use to fully adapt.

### Shift Point Selection

The gearshift points are selected by the TCM, as a function of the output speed, accelerator pedal position, selector position and shift program selected. The driver has control over the shift points by the selector lever, accelerator pedal movement and mode switch.

## Transmission Shift selection

GETtheMANUALS.org

### Shift Map Selection

The transmission control system utilizes a number of driver selectable operating modes and also a number of adaptive/automatically selectable modes. Sport, Normal and Cruise Control mode are all driver selectable. Hot mode, traction control mode and trailer towing mode are all adaptive modes i.e. the transmission will automatically select this mode dependent upon the current driving conditions.

### Normal Mode

Normal mode can be selected by activation of the transmission mode switch located on the J-Gate. Once activated this mode will remain engaged until the driver deselects the mode or engages the cruise control system. If the driver engages cruise control when Normal mode is active upon deactivation of the cruise system the transmission will automatically re-engage Normal mode. This mode can be over-ridden by a number of adaptive modes.

The mode switch is of the momentary type.

### Cruise Mode

When the driver engages the cruise control system the TCM receives a CAN message transmitted by the Adaptive Cruise Control (ACC) or engine electronic controls which informs the TCM that cruise control is currently active. Upon receipt of this message the TCM selects a new transmission shift map. This map has been developed to reduce busy gearshift during cruise mode. It has also been developed to increase fuel economy.

### Hot Mode

This is one of the adaptive modes the transmission can enter when conditions are correct. When the transmission fluid temperature, chip temp, engine oil temp or coolant temperature becomes hot enough to reach threshold values, the TCM will cause the transmission to enter Hot mode. This mode will automatically engage new shift and lock-up maps to reduce heat generated within the transmission. The shift map will enable the transmission to change to higher gears at lower vehicle speeds and the lock-up map will engage the lock-up clutch at lower vehicle speeds and in lower gears. The effect of this is that less heat will be generated within the transmission due to the effects of lock-up clutch slip and churning effects. There will be forced upshift strategy used in hot mode. To exit hot mode the selector lever must be moved or the brake pedal applied or the accelerator pedal applied 100%, during all of these methods of exiting from hot mode the fluid temperature must be lower than the threshold values.

### Traction Control Mode

Traction Control Mode is an adaptive mode, which is automatically engaged when a traction event occurs. When driving on slippery surfaces (i.e.sand, ice) it is possible for the driven wheels to begin to spin. The TCM believes the vehicle speed is increasing and therefore it may begin to upshift. These upshifts reduce the torque at the wheel and so tend to reduce wheel slip. The downshift lines are forced downwards to prevent unwanted shifts. To reduce the effects of this, if a traction event occurs a signal is transmitted by the ABS module to the TCM over the CAN network, the TCM uses this signal to change the currently selected shift map. The new shift map will have gearshift lines further apart, thus inhibiting the transmission shifting to a lower gear.

### Hill/Trailer Towing Mode

This is an adaptive mode. When the TCM detects reduced vehicle acceleration for a certain percentage of throttle opening then this mode is automatically engaged by the TCM. When this mode is engaged a new shift map and torque converter lock-up map is selected. This new shift map is designed to reduce the number of gearshifts when towing a trailer or with the car climbing a steep hill. The shift map will cause the transmission to hold on to gears for longer this increases acceleration and reduces the number of gearshifts. This mode can also give an advantage when driving at high altitudes, where the torque produced by an engine is greatly reduced by the effects of reduced ambient pressure and airflow.

### Driving Mode Priority

Each of the above modes has an associated priority i.e. Normal mode cannot over-ride cruise mode etc.

### Adaptive Shift Strategies

The TCM of the six speed ZF automatic transmission incorporates adaptive strategies which improve the accessibility of the vehicle`s performance in driving conditions while maintaining a relaxed driving experience when cruising.

In "Sport" mode, accelerator pedal usage and cornering behaviour are monitored to assess driving style and road conditions. When an enthusiastic driving style or a demanding road is detected, 6th gear is inhibited and the lower gears are made slightly more accesssible in order to prevent unwanted "hunting" between gears. Conversely, when cruising conditions are detected, 6th gear is once again made available to maximise driving refinement and economy.

Under conditions of heavy braking, the transmission will perform one or more downshifts to improve response to a subsequent accelerator pedal application. Similarly if the accelerator pedal is released rapidly following hard acceleration, one or more upshifts are inhibited to increase engine braking and also improve subsequent response.

To complement these features, when a corner is detected transmission upshifts are inhibited. This inhibition is also maintained for a short distance after the corner allowing the driver to achieve a smooth balance through the bend without unwanted shifting mid-corner.

## Safety features

The safety functions are designed to safeguard against mis-operation by the driver as well as against system malfunctions. The mis-operation system prevents reverse gear from being engaged at high forward speeds (Above 5 kph) and prevents manual downshifting at excessive engine speeds.

Great attention has been paid to safeguarding against, and detecting, malfunctions in the electronic control system. The design of the electrical and diagnostic system is such that system integrity is protected at all times.

The hydraulic system has "fail-safe" characteristics regarding its electrical energisation, i.e. as a result of the power supply being lost to the electro-hydraulic actuators the transmission engages a reliable emergency gear ratio to facilitate a basic limp-home mode.

Recognition of critical shift operation by monitoring the last element in the signal path, i.e. the solenoid valve, and checking by means of redundant measured variables, i.e. engine speed, input speed and output speed.

Measures are in place which guarantee a high degree of availability of safeguard functions, i.e. monitoring of safety circuits. For this purpose each time the vehicle is started there is a check on the entire safety hardware, this is during TCM initialization and the associated program parts and signal paths used during the TCM operation status. A malfunction in this part of the system, or triggering of the safety circuit, will be communicated to the driver by the instrument cluster message centre.

GETtheMANUALS.org

# Automatic Transmission / Transaxle - Diagnostic StrategyVIN Range: M45255->N52047

Diagnosis and Testing

The complexity of the electronics involved with the automatic transmission preclude the use of workshop general electrical test equipment. Therefore, reference should be made to the Jaguar approved diagnostic system for detailed instructions on testing the automatic transmission.

Where a fault involving the automatic transmission is indicated by the Jaguar approved diagnostic system, some basic diagnostic methods may be necessary to confirm that connections are good and that the wiring is not damaged, before installing new components.

1. **1.** Verify the customer concern by operating the vehicle. Refer to the automatic transmission diagnostic drive cycle in the DTC summary section.
2. **2.** Check the fluid levels and condition of the fluid.
3. **3.** Check for non-factory fitted items.
4. **4.** Check the selector lever cable for correct adjustment.
   REFER to Section 307-05 Automatic Transmission/Transaxle External Controls.
5. **5.** Visually inspect for obvious signs of mechanical, electrical or hydraulic damage:

**Visual Inspection Chart**

| Mechanical | Electrical | Hydraulic |
|---|---|---|
| ○ Damaged shift mechanism/linkages<br>○ Damaged automatic transmission casing | ○ Blown fuse<br>○ Wiring harness<br>○ Damaged Transmission Control Module (TCM)<br>○ Damaged rotary switch<br>○ Damaged, loose or corroded connectors | ○ Fluid level too high/low<br>○ Poor condition of fluid<br>○ Fluid leak |

## Basic diagnosis

### Check Fluid Level and Condition

CAUTION: The vehicle should not be driven if the fluid level is low as internal failure can result.

• NOTE: The transmission oil temperature must not be allowed to exceed 50 °C (122 °F) whilst checking level. Should the temperature rise above this figure, abort the check and allow the transmission oil to cool to below 30°C (86°F).

This vehicle is not equipped with a fluid level indicator. An incorrect level may affect the transmission operation and could result in transmission damage. To correctly check and add fluid to the transmission,
REFER to Transmission Fluid Level Check in this section.

### High Fluid Level

A fluid level that is too high may cause the fluid to become aerated due to the churning action of the rotating internal parts. This will cause erratic control pressure, foaming, loss of fluid from the vent tube and possible transmission damage. If an overfill reading is indicated, refer to Transmission Fluid Drain and Refill in this section.

### Low Fluid Level

A low fluid level could result in poor transmission engagement, slipping, or damage. This could also indicate a leak in one of the transmission seals or gaskets.
REFER to Transmission Fluid Level Check in this section.

### Adding Fluid

CAUTION: The use of any other type of transmission fluid than specified can result in transmission damage.

If fluid needs to be added, add fluid in 0.50 liter increments through the fill hole opening. Do not overfill the fluid. For fluid type, refer to the General Specification chart in this section.
REFER to Transmission Fluid Level Check in this section.

### Fluid Condition Check

1. **1.** Check the fluid level. For additional information,
   REFER to Transmission Fluid Drain and Refill in this section.
2. **2.** Observe the color and the odor. The color under normal circumstances should be reddish, not brown or black.
3. **3.** Allow the fluid to drip onto a facial tissue and examine the stain.
4. **4.** If evidence of solid material is found, the transmission fluid pan should be removed for further inspection.

NOTE: In the event of a transmission unit replacement for internal failure, the oil cooler and pipes must also be replaced.

### Shift Linkage Check

Hydraulic leakage at the manual control valve can cause delay in engagements and/or slipping while operating if the linkage is not correctly adjusted; for selector lever cable adjustment,
REFER to Section 307-05 Automatic Transmission/Transaxle External Controls.

## Diagnostic Trouble Code Chart

GETtheMANUALS.org

| Five Digit | Description | Action |
|---|---|---|

| DTC | | |
|---|---|---|
| P0725 | Engine speed signal fault. CAN network or engine management fault. | REFER to Section 418-00 Module Communications Network., REFER to Section 303-14A Electronic Engine Controls / 303-14B Electronic Engine Controls / 303-14C Electronic Engine Controls. Or REFER to Section 303-14A Electronic Engine Controls / 303-14B Electronic Engine Controls / 303-14C Electronic Engine Controls. |
| P1796 | CAN Bus off line or network fault. CAN network or module fault. | REFER to Section 418-00 Module Communications Network. |
| P0710 | Transmission fluid temperature signal fault. Transmission fluid temperature sensor open or short circuit. | CLEAR ALL DTC's. TEST the system for normal operation. If DTC resets, install a new TCM and Main Control Valve Body. For additional information, REFER to Transmission Control Module (TCM) and Main Control Valve Body in this section. |
| P0701 | Combination of DTC's present. Impossible substrate functions. | CLEAR ALL DTC's. TEST the system for normal operation. |
| P1603 | EEPROM Communications / Internal error. | CLEAR ALL DTC's. TEST the system for normal operation. If DTC resets, install a new TCM and Main Control Valve Body. For additional information, REFER to Transmission Control Module (TCM) and Main Control Valve Body in this section. |
| P0605 | EEPROM /FLASH checksum. | • NOTE: If DTC has been logged after a new TCM has been fitted and flashed, an error has occurred during the process. Check the file used for flashing process is correct and repeat the flash process.<br><br>CLEAR ALL DTC's. TEST the system for normal operation. If DTC resets, install a new TCM and Main Control Valve Body. For additional information, REFER to Transmission Control Module (TCM) and Main Control Valve Body in this section. |
| P1719 | Engine torque signal fault or CAN message. CAN network or engine management fault. | REFER to Section 418-00 Module Communications Network., REFER to Section 303-14A Electronic Engine Controls / 303-14B Electronic Engine Controls / 303-14C Electronic Engine Controls. Or REFER to Section 303-14A Electronic Engine Controls / 303-14B Electronic Engine Controls / 303-14C Electronic Engine Controls. |
| P0720 | Output shaft speed signal fault. Output shaft speed sensor open or short circuit. | Compare output shaft speed sensor speed to wheel speed sensor speed. REFER to Section 206-09 Anti-Lock Control - Stability Assist.<br><br>CLEAR ALL DTC's. TEST the system for normal operation. Carry out a drive cycle test with harsh shifts and rapid deceleration. If DTC resets, install a new TCM and Main Control Valve Body. For additional information, REFER to Transmission Control Module (TCM) and Main Control Valve Body in this section. |
| P0715 | Turbine speed signal fault. Turbine shaft speed sensor open or short circuit. | CLEAR ALL DTC's. TEST the system for normal operation. If DTC resets, install a new TCM and Main Control Valve Body. For additional information, REFER to Transmission Control Module (TCM) and Main Control Valve Body in this section. |
| P0711 | Transmission fluid temperature monitoring fault. Transmission fluid temperature sensor out of range. | CLEAR ALL DTC's. TEST the system for normal operation. If DTC resets, install a new TCM and Main Control Valve Body. For additional information, REFER to Transmission Control Module (TCM) and Main Control Valve Body in this section. |
| P0705 | Transmission position switch fault. Transmission position switch open or short circuit. | CLEAR ALL DTC's. TEST the system for normal operation. If DTC resets, install a new TCM and Main Control Valve Body. For additional information, REFER to Transmission Control Module (TCM) and Main Control Valve Body in this section. |
| P1783 | Over temperature shutdown. Transmission overheated. | REFER to Section 307-02 Transmission/Transaxle Cooling. |
| P1794 | Transmission power supply fault. Transmission power supply open or short circuit. | Refer to Visual Inspection Chart in this section. |
| P0610 | Engine control module (ECM) and TCM fault. Incorrect configuration or calibration loaded for ECM and TCM. | • NOTE: If DTC has been logged after a new TCM has been fitted and flashed, an error has occurred during the process. Check the file used for flashing process is correct and repeat the flash process.<br><br>CHECK the ECM and TCM for correct software configuration and calibration. CLEAR ALL DTC's. TEST the system for normal operation. |
| P0651 | Transmission pressure regulator and solenoid fault. Transmission pressure regulator and solenoid supply open or short circuit. | CLEAR ALL DTC's. TEST the system for normal operation. If DTC resets, install a new TCM and Main Control Valve Body. For additional information, REFER to Transmission Control Module (TCM) and Main Control Valve Body in this section. |
| P0606 | Watchdog monitoring locking mechanism. | CLEAR ALL DTC's. TEST the system for normal operation. If DTC resets, install a new TCM and Main Control Valve Body. For additional information, REFER to Transmission Control Module (TCM) and Main Control Valve Body in this section. |
| P0741 | Torque converter clutch (TCC) fault. TCC stuck open position. | CLEAR ALL DTC's. TEST the system for normal operation. If DTC resets, install a new torque converter. |
| P0750 | Transmission pressure regulator 1 fault. Transmission pressure regulator 1 supply open or short circuit. | CLEAR ALL DTC's. TEST the system for normal operation. If DTC resets, install a new TCM and Main Control Valve Body. For additional information, REFER to Transmission Control Module (TCM) and Main Control Valve Body in this section. |
| P0753 | Transmission pressure regulator 1 fault. Transmission pressure regulator 1 failed plausibility check. | CLEAR ALL DTC's. TEST the system for normal operation. If DTC resets, install a new TCM and Main Control Valve Body. For additional information, REFER to Transmission Control Module (TCM) and Main Control Valve Body in this section. |
| P0755 | Transmission pressure regulator 2 fault. Transmission pressure regulator 2 supply open or short circuit. | CLEAR ALL DTC's. TEST the system for normal operation. If DTC resets, install a new TCM and Main Control Valve Body. For additional information, REFER to Transmission Control Module (TCM) and Main Control Valve Body in this section. |
| P0758 | Transmission pressure regulator 2 fault. Transmission pressure regulator 2 failed plausibility check. | CLEAR ALL DTC's. TEST the system for normal operation. If DTC resets, install a new TCM and Main Control Valve Body. For additional information, REFER to Transmission Control Module (TCM) and Main Control Valve Body in this section. |
| P0760 | Transmission pressure regulator 3 fault. Transmission pressure regulator 3 supply open or short circuit. | CLEAR ALL DTC's. TEST the system for normal operation. If DTC resets, install a new TCM and Main Control Valve Body. For additional information, REFER to Transmission Control Module (TCM) and Main Control Valve Body in this section. |
| P0763 | Transmission pressure regulator 3 fault. Transmission pressure regulator 3 failed plausibility check. | CLEAR ALL DTC's. TEST the system for normal operation. If DTC resets, install a new TCM and Main Control Valve Body. For additional information, REFER to Transmission Control Module (TCM) and Main Control Valve Body in this section. |
| P0765 | Transmission pressure regulator 4 fault. Transmission pressure regulator 4 supply open or short circuit. | CLEAR ALL DTC's. TEST the system for normal operation. If DTC resets, install a new TCM and Main Control Valve Body. For additional information, REFER to Transmission Control Module (TCM) and Main Control Valve Body in this section. |
| P0768 | Transmission pressure regulator 4 fault. Transmission pressure regulator 4 failed plausibility check. | CLEAR ALL DTC's. TEST the system for normal operation. If DTC resets, install a new TCM and Main Control Valve Body. For additional information, REFER to Transmission Control Module (TCM) and Main Control Valve Body in this section. |
| P0770 | Transmission pressure regulator 5 fault. Transmission pressure regulator 5 supply open or short circuit. | CLEAR ALL DTC's. TEST the system for normal operation. If DTC resets, install a new TCM and Main Control Valve Body. For additional information, REFER to Transmission Control Module (TCM) and Main Control Valve Body in this section. |

GEARHEADWANTED.COM

| | | |
|---|---|---|
| P0773 | Transmission pressure regulator 5 fault. Transmission pressure regulator 5 failed plausibility check. | CLEAR ALL DTC's. TEST the system for normal operation. If DTC resets, install a new TCM and Main Control Valve Body. For additional information, REFER to Transmission Control Module (TCM) and Main Control Valve Body in this section. |
| P0740 | Transmission pressure regulator 6 fault. Transmission pressure regulator 6 supply open or short circuit. | CLEAR ALL DTC's. TEST the system for normal operation. If DTC resets, install a new TCM and Main Control Valve Body. For additional information, REFER to Transmission Control Module (TCM) and Main Control Valve Body in this section. |
| P0743 | Transmission pressure regulator 6 failed plausibility check. | CLEAR ALL DTC's. TEST the system for normal operation. If DTC resets, install a new TCM and Main Control Valve Body. For additional information, REFER to Transmission Control Module (TCM) and Main Control Valve Body in this section. |
| P0787 | Transmission shift solenoid valve 1 fault. Transmission shift solenoid valve 1 supply open or short circuit. | CLEAR ALL DTC's. TEST the system for normal operation. If DTC resets, install a new TCM and Main Control Valve Body. For additional information, REFER to Transmission Control Module (TCM) and Main Control Valve Body in this section. |
| P0788 | Transmission shift solenoid valve 1 fault. Transmission shift solenoid valve 1 failed plausibility check. | CLEAR ALL DTC's. TEST the system for normal operation. If DTC resets, install a new TCM and Main Control Valve Body. For additional information, REFER to Transmission Control Module (TCM) and Main Control Valve Body in this section. |
| P0730 | Selection fault in all transmission gears. Internal transmission gear ratio fault. | Carry out the transmission fluid check in this section. CLEAR ALL DTC's. Carry out a drive cycle test. |
| P0731 | 1st gear selection fault. Internal transmission gear ratio fault. | Carry out the transmission fluid check in this section. CLEAR ALL DTC's. TEST the system for normal operation. If DTC resets, install a new Transmission. For additional information, REFER to Transmission in this section. |
| P0732 | 2nd gear selection fault. Internal transmission gear ratio fault. | Carry out the transmission fluid check in this section. CLEAR ALL DTC's. TEST the system for normal operation. If DTC resets, install a new Transmission. For additional information, REFER to Transmission in this section. |
| P0733 | 3rd gear selection fault. Internal transmission gear ratio fault. | Carry out the transmission fluid check in this section. CLEAR ALL DTC's. TEST the system for normal operation. If DTC resets, install a new Transmission. For additional information, REFER to Transmission in this section. |
| P0734 | 4th gear selection fault. Internal transmission gear ratio fault. | Carry out the transmission fluid check in this section. CLEAR ALL DTC's. TEST the system for normal operation. If DTC resets, install a new Transmission. For additional information, REFER to Transmission in this section. |
| P0735 | 5th gear selection fault. Internal transmission gear ratio fault. | Carry out the transmission fluid check in this section. CLEAR ALL DTC's. TEST the system for normal operation. If DTC resets, install a new Transmission. For additional information, REFER to Transmission in this section. |
| P0729 | 6th gear selection fault. Internal transmission gear ratio fault. | Carry out the transmission fluid check in this section. CLEAR ALL DTC's. TEST the system for normal operation. If DTC resets, install a new Transmission. For additional information, REFER to Transmission in this section. |
| P0780 | Gear load fault in all transmission gears. Incorrect calculation during gear shift. | Carry out the transmission fluid check in this section. CLEAR ALL DTC's. TEST the system for normal operation. If DTC resets, install a new Transmission. For additional information, REFER to Transmission in this section. |
| P0781 | Gear load fault from 1st to 2nd gear. Incorrect calculation during gear shift. | Carry out the transmission fluid check in this section. CLEAR ALL DTC's. TEST the system for normal operation. If DTC resets, install a new Transmission. For additional information, REFER to Transmission in this section. |
| P0782 | Gear load fault from 2nd to 3rd gear. Incorrect calculation during gear shift. | Carry out the transmission fluid check in this section. CLEAR ALL DTC's. TEST the system for normal operation. If DTC resets, install a new Transmission. For additional information, REFER to Transmission in this section. |
| P0783 | Gear load fault from 3rd to 4th gear. Incorrect calculation during gear shift. | Carry out the transmission fluid check in this section. CLEAR ALL DTC's. TEST the system for normal operation. If DTC resets, install a new Transmission. For additional information, REFER to Transmission in this section. |
| P0784 | Gear load fault from 4th to 5th gear. Incorrect calculation during gear shift. | Carry out the transmission fluid check in this section. CLEAR ALL DTC's. TEST the system for normal operation. If DTC resets, install a new Transmission. For additional information, REFER to Transmission in this section. |
| P0829 | Gear load fault from 5th to 6th gear. Incorrect calculation during gear shift. | Carry out the transmission fluid check in this section. CLEAR ALL DTC's. TEST the system for normal operation. If DTC resets, install a new Transmission. For additional information, REFER to Transmission in this section. |
| P0781 | Gear load fault from 2nd to 1st gear. Incorrect calculation during gear shift. | Carry out the transmission fluid check in this section. CLEAR ALL DTC's. TEST the system for normal operation. If DTC resets, install a new Transmission. For additional information, REFER to Transmission in this section. |
| P0782 | Gear load fault from 3rd to 2nd gear. Incorrect calculation during gear shift. | Carry out the transmission fluid check in this section. CLEAR ALL DTC's. TEST the system for normal operation. If DTC resets, install a new Transmission. For additional information, REFER to Transmission in this section. |
| P0783 | Gear load fault from 4th to 3rd gear. Incorrect calculation during gear shift. | Carry out the transmission fluid check in this section. CLEAR ALL DTC's. TEST the system for normal operation. If DTC resets, install a new Transmission. For additional information, REFER to Transmission in this section. |
| P0784 | Gear load fault from 5th to 4th gear. Incorrect calculation during gear shift. | Carry out the transmission fluid check in this section. CLEAR ALL DTC's. TEST the system for normal operation. If DTC resets, install a new Transmission. For additional information, REFER to Transmission in this section. |
| P0829 | Gear load fault from 6th to 5th gear. Incorrect calculation during gear shift. | Carry out the transmission fluid check in this section. CLEAR ALL DTC's. TEST the system for normal operation. If DTC resets, install a new Transmission. For additional information, REFER to Transmission in this section. |
| P1798 | CAN network timed out to instrument cluster. CAN network fault. | REFER to Section 418-00 Module Communications Network. |
| P1797 | CAN network timed out to engine management system. CAN network fault. | REFER to Section 303-14A Electronic Engine Controls / 303-14B Electronic Engine Controls / 303-14C Electronic Engine Controls. Or REFER to Section 303-14A Electronic Engine Controls / 303-14B Electronic Engine Controls / 303-14C Electronic Engine Controls. |

FORDTECHMANUALS.INFO

| | | |
|---|---|---|
| P0702 | Electrical system undervoltage. Charging fault whilst engine is running. | REFER to Section 414-00 Battery and Charging System - General Information. |
| P1774 | CAN network timed out to J-Gate. CAN network fault. | REFER to Section 418-00 Module Communications Network. |
| P1799 | CAN network timed out to ABS system. CAN network fault. | REFER to Section 418-00 Module Communications Network. |
| P1749 | Invalid Park and Neutral signal. Starter motor inoperative. | REFER to Section 303-06 Starting System. |
| P0666 | Substrate temperature sensor fault. Substrate temperature sensor open or short circuit. | CLEAR ALL DTC's. TEST the system for normal operation. Carry out a drive cycle test. If DTC resets, install a new TCM and Main Control Valve Body. For additional information, REFER to Transmission Control Module (TCM) and Main Control Valve Body in this section. |
| P0641 | All sensor's supply voltage fault. | CLEAR ALL DTC's. TEST the system for normal operation. If DTC resets, install a new TCM and Main Control Valve Body. For additional information, REFER to Transmission Control Module (TCM) and Main Control Valve Body in this section. |
| P1605 | TCM fault. Battery buffered RAM. | CLEAR ALL DTC's. TEST the system for normal operation. If DTC resets, install a new TCM and Main Control Valve Body. For additional information, REFER to Transmission Control Module (TCM) and Main Control Valve Body in this section. |
| P0706 | Implausible J-Gate position. No manual selection of gears. | REFER to Section 307-05 Automatic Transmission/Transaxle External Controls. |
| P0825 | J-gate position fault on the manual side of the J-Gate. | CLEAR ALL DTC's. TEST the system for normal operation. If DTC resets, INSTALL new components as necessary. |
| P0709 | Intermediate J-Gate position. | CLEAR ALL DTC's. TEST the system for normal operation. If DTC resets, INSTALL new components as necessary. |

## Transmission Link Harness Electrical Connector Layout

### Electrostatic Discharge

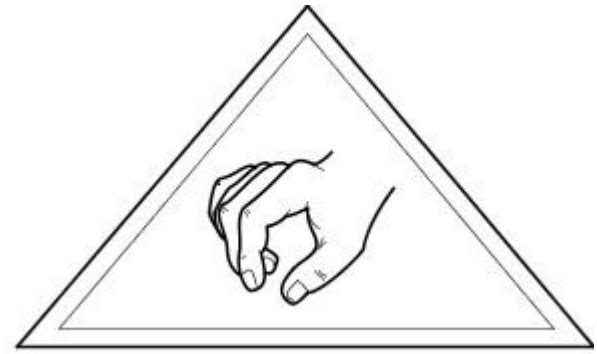

E31218

CAUTION: When working with the transmission control module (TCM) and main control valve body, all suitable safety precautions must be taken to protect the component against electrostatic discharge. Failure to follow these instructions may result in component damage.

Make sure all possible safety precautions are taken to protect the TCM and main control valve body unit against electrostatic discharge

Personal Wrist-Band Earthing

Earthing (grounding) by means of a wrist band or strap is the most reliable method of diverting electrostatic charges away from working personnel, and should therefore be used wherever possible, particularly if the person concerned is working while seated. The wrist band earthing (grounding) device consists of a bracelet closely attached to the wrist and a spiral earthing (grounding) cable connecting it to the earthing (grounding) contact point. This system must include a quick-release device so that the wrist can be released in the event of danger.

Shoes and Foot Earthing Straps

Electrically conductive shoes should be worn by persons who mainly work standing up or either standing or sitting in ESD protection zones, particularly if wrist band earthing (grounding) is impracticable. The standard calls for ESD shoes to record values between 0 and 35 Megga-ohms (MOhm) resistance. However, for antistatic working shoes resistance values between 0.1 and 1000 MOhm are called for, and a through-conducting resistance for protective shoes of 0.1 to 100 MOhm. A lower limit value of not less than 0.1 MOhm must be maintained on account of the contact voltage risk. For this reason the minimum value has been set contrary to the standard at the higher figure of 0.75 MOhm.

## Transmission Link Harness Electrical Connector Layout

• CAUTIONS:

When working with the transmission control module (TCM) and main control valve body, all suitable safety precautions must be taken to protect the component against electrostatic discharge.

Do not carry out any electrical tests on the TCM and main control valve body. Failure to follow these instructions may result in component damage.

Make sure all suitable safety precautions are taken to protect the transmission control module (TCM) and main control valve body electrical connector pins against electrostatic discharge.

GETtheMANUALS.org

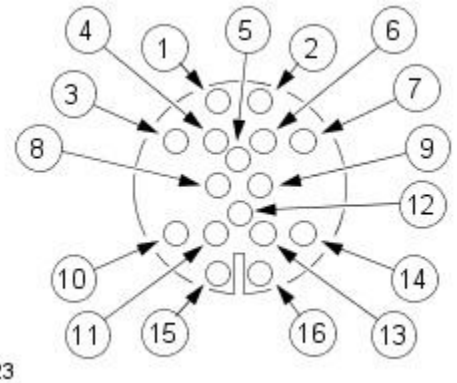

E31323

**Transmission Link Harness Electrical Connector**

| Pin No | Description |
|---|---|
| 1 | Not used |
| 2 | CAN Low |
| 3 | Not used |
| 4 | Not used |
| 5 | Not used |
| 6 | CAN High |
| 7 | Not used |
| 8 | Not used |
| 9 | Ignition supply |
| 10 | Park / Neutral Signal |
| 11 | Not used |
| 12 | Not used |
| 13 | Ground |
| 14 | Power supply +v |
| 15 | Not used |
| 16 | Ground |

## Clutch Application Chart

| Transmission State | Clutch / Clutchs Applied During Selected Gear | | | | | |
|---|---|---|---|---|---|---|
| | A | B | C | D | E | CC |
| **D1** | * | - | - | * | - | * |
| **D2** | * | - | * | - | - | * |
| **D3** | * | * | - | - | - | * |
| **D4** | * | - | - | - | * | * |
| **D5** | - | * | - | - | * | * |
| **D6** | - | - | * | - | * | * |
| **P** | - | - | - | * | - | - |
| **R** | - | * | - | * | - | - |
| **N** | - | - | - | * | - | - |

## Solenoids

• CAUTIONS:

When working with the transmission control module (TCM) and main control valve body, all suitable safety precautions must be taken to protect the component against electrostatic discharge.

Do not carry out any electrical tests on the TCM and main control valve body. Failure to follow these instructions may result in component damage.

The hydraulic module contains one solenoid valve. The solenoid valve is actuated by the TCM and has two positions (open or closed), it is used to switch the position valve.

There are six electronic pressure control valves, these convert an electric current into a proportional hydraulic pressure. They are energised by the TCM and actuate the valves belonging to the relevant switching elements.

Two types of electronic pressure regulator are installed:

1. **1.** Pressure regulator with a rising characteristic (1,3,6 green cap) i.e. as current increases pressure increases (0mA = 0 bar / 700mA = 4.6 bar)
2. **2.** Pressure regulator with a falling characteristic (2,4,5 black cap) i.e. as current increases the pressure drops (0 mA = 4.6 bar / 700 mA = 0 bar)

Both types of regulator have a resistance value of approximately 5 Ohms at 20°C.

### Solenoid Application Chart

| Selected Gear | Solenoid / Pressure Regulators Applied During Selected Gear | | | | | | |
|---|---|---|---|---|---|---|---|
| | SV1 | PR1 | PR2 | PR3 | PR4 | PR5 | PR6 |
| **D1** | - | * | - | - | * | * | * |
| **D2** | - | * | - | * | - | * | * |
| **D3** | - | * | * | - | - | * | * |
| **D4** | * | * | - | - | * | * | * |
| **D5** | * | - | * | - | * | * | * |
| **D6** | * | - | - | * | * | * | * |

GETtheMANUALS.org

- SV1: Solenoid valve
- PR1: Clutch A
- PR2: Clutch B
- PR3: Clutch C
- PR4: Clutch D& E
- PR5: System Pressure
- PR6: Torque Converter Clutch

## System inputs and outputs

### System inputs

The TCM uses the permanent voltages supply to support and to maintain data in the random access memory (RAM).

The Term.15 input is used to wake up the TCM. Once awake the TCM commences its initialization sequence. This input is not a power supply input to the TCM. For initialisation to commence the ignition must be switched to the "II2" position and Vbat above 7V but below 16V (30ms after term.15 signal on, the initialization of the TCM starts). Initialization time is 500ms max. When initialization is finished, the Drive Program is started and TCM has full functionality.

The TCM has one internal solenoid ground for all internal solenoids (SV and PR).

This internal input acts as the ground for position switch. The TCM requires two vehicle ground supplies. (Term.31). Both ground wires are linked to one grounding point on the vehicle. The TCM incorporates polarity reversal protection.

### System outputs

The P/N signal (from the internal position sensor) is used to ensure that the engine is only started with the transmission gear selector in either the Park or Neutral position. When the selector is in either Park or Neutral this output is activated. This in turn closes a relay that allows the starter to be engaged if allowed by the Engine management system. If this output fails the electronic engine controls system uses a CAN bus signal supplied by the TCM to allow the engine to start.

### Transmission control

The selector lever can be used to engage Park through to drive (D) mechanically. The link between the lever and the transmission is by a cable.

The manual side of the shifter, 5 through to position 2 are selected electronically by the CAN bus. Integrated with this are functions for gear selected illumination, brake shift interlock and keylock interlock system. For additional information,
REFER to Section 307-05 Automatic Transmission/Transaxle External Controls.

GETtheMANUALS.org

# Automatic Transmission / Transaxle - Diagnostic StrategyVIN Range: N52048->N99999

Diagnosis and Testing

The complexity of the electronics involved with the automatic transmission preclude the use of workshop general electrical test equipment. Therefore, reference should be made to the Jaguar approved diagnostic system for detailed instructions on testing the automatic transmission.

Where a fault involving the automatic transmission is indicated by the Jaguar approved diagnostic system, some basic diagnostic methods may be necessary to confirm that connections are good and that the wiring is not damaged, before installing new components.

1. **1.** Verify the customer concern by operating the vehicle. Refer to the automatic transmission diagnostic drive cycle in the DTC summary section.
2. **2.** Check the fluid levels and condition of the fluid.
3. **3.** Check for non-factory fitted items.
4. **4.** Check the selector lever cable for correct adjustment as per workshop manual section 307-05 selector lever cable adjustment procedure.
5. **5.** Visually inspect for obvious signs of mechanical, electrical or hydraulic damage:

**Visual Inspection Chart**

| Mechanical | Electrical | Hydraulic |
|---|---|---|
| ○ Damaged shift mechanism/linkages<br>○ Damaged automatic transmission casing | ○ Blown fuse<br>○ Wiring harness<br>○ Damaged Transmission Control Module (TCM)<br>○ Damaged rotary switch<br>○ Damaged, loose or corroded connectors | ○ Fluid level too high/low<br>○ Poor condition of fluid<br>○ Fluid leak |

## Basic diagnosis

### Check Fluid Level and Condition

CAUTION: The vehicle should not be driven if the fluid level is low as internal failure can result.

• NOTE: The transmission oil temperature must not be allowed to exceed 50 °C (122 °F) whilst checking level. Should the temperature rise above this figure, abort the check and allow the transmission oil to cool to below 30°C (86°F).

This vehicle is not equipped with a fluid level indicator. An incorrect level may affect the transmission operation and could result in transmission damage. To correctly check and add fluid to the transmission follow the procedures outlined in the workshop manual section 307-01 under General Procedures.

### High Fluid Level

A fluid level that is too high may cause the fluid to become aerated due to the churning action of the rotating internal parts. This will cause erratic control pressure, foaming, loss of fluid from the vent tube and possible transmission damage. If an overfill reading is indicated, refer to the workshop manual section 307-01 - General Procedures - drain and refill.

### Low Fluid Level

A low fluid level could result in poor transmission engagement, slipping, or damage. This could also indicate a leak in one of the transmission seals or gaskets. To correctly check and add fluid to the transmission follow the procedures outlined in the workshop manual section 307-01 under General Procedures.

### Adding Fluid

CAUTION: The use of any other type of transmission fluid than specified can result in transmission damage.

If fluid needs to be added, add fluid in 0.50 liter increments through the fill hole opening. Do not overfill the fluid. For fluid type, refer to the General Specification chart in section 307-01 of the workshop manual.

### Fluid Condition Check

1. **1.** Check the fluid level. For additional information refer to the workshop manual section 307-01.
2. **2.** Observe the color and the odour. The color under normal circumstances should be like honey, not dark brown or black.
3. **3.** Allow the fluid to drip onto a facial tissue and examine the stain.
4. **4.** If evidence of solid material is found, the transmission fluid pan should be removed for further inspection.

NOTE: In the event of a transmission unit replacement for internal failure, the oil cooler and pipes must also be replaced.

### Shift Linkage Check

Hydraulic leakage at the manual control valve can cause delay in engagements and/or slipping while operating if the linkage is not correctly adjusted; for selector lever cable adjustment refer to the workshop manual section 307-05.

## Diagnostic Trouble Code Chart

| DTC | Description | Action |
|---|---|---|
| P0725 | Engine speed signal fault. CAN network or engine management fault. | Perform network checks as per section 418-00 in the workshop manual, repair any faults on the network. Clear DTC and retest system. Run diagnostic checks on Electronic Engine Controls as per workshop manual section 303-14. Repair any faults, clear DTCs and retest system. |

Get Free Manuals.com

| DTC | Description | Action |
|---|---|---|
| P1796 | CAN Bus off line or network fault. CAN network or module fault. | Perform network checks as per section 418-00 in the workshop manual, repair any faults on the network. Clear DTC and retest system. |
| P0710 | Transmission fluid temperature signal fault. Transmission fluid temperature sensor open or short circuit. | CLEAR ALL DTC's. TEST the system for normal operation. If DTC resets, install a new TCM and Main Control Valve Body. For additional information,<br>REFER to: Transmission Control Module (TCM) and Main Control Valve Body (307-01 Automatic Transmission/Transaxle, In-vehicle Repair). |
| P0701 | Combination of DTC's present. Impossible substrate functions. | CLEAR ALL DTC's. TEST the system for normal operation. |
| P1603 | EEPROM Communications / Internal error. | CLEAR ALL DTC's. TEST the system for normal operation. If DTC resets, install a new TCM and Main Control Valve Body. For additional information,<br>REFER to: Transmission Control Module (TCM) and Main Control Valve Body (307-01 Automatic Transmission/Transaxle, In-vehicle Repair). |
| P0605 | EEPROM /FLASH checksum. | • NOTE: If DTC has been logged after a new TCM has been fitted and flashed, an error has occurred during the process. Check the file used for flashing process is correct and repeat the flash process.<br><br>CLEAR ALL DTC's. TEST the system for normal operation. If DTC resets, install a new TCM and Main Control Valve Body. For additional information,<br>REFER to: Transmission Control Module (TCM) and Main Control Valve Body (307-01 Automatic Transmission/Transaxle, In-vehicle Repair). |
| P1719 | Engine torque signal fault or CAN message. CAN network or engine management fault. | Perform network checks as per section 418-00 in the workshop manual, repair any faults on the network. Clear DTC and retest system. Run diagnostic checks on Electronic Engine Controls as per workshop manual section 303-14. Repair any faults, clear DTCs and retest system. |
| P0720 | Output shaft speed signal fault. Output shaft speed sensor open or short circuit. | Compare output shaft speed sensor speed to wheel speed sensor speed. Refer to section 206-09 of the workshop manual for information about performing wheel speed sensor tests. CLEAR ALL DTC's. TEST the system for normal operation. Carry out a drive cycle test with harsh shifts and rapid deceleration. If DTC resets, install a new TCM and Main Control Valve Body. For additional information,<br>REFER to: Transmission Control Module (TCM) and Main Control Valve Body (307-01 Automatic Transmission/Transaxle, In-vehicle Repair). |
| P0715 | Turbine speed signal fault. Turbine shaft speed sensor open or short circuit. | CLEAR ALL DTC's. TEST the system for normal operation. If DTC resets, install a new TCM and Main Control Valve Body. For additional information,<br>REFER to: Transmission Control Module (TCM) and Main Control Valve Body (307-01 Automatic Transmission/Transaxle, In-vehicle Repair). |
| P0711 | Transmission fluid temperature monitoring fault. Transmission fluid temperature sensor out of range. | CLEAR ALL DTC's. TEST the system for normal operation. If DTC resets, install a new TCM and Main Control Valve Body. For additional information,<br>REFER to: Transmission Control Module (TCM) and Main Control Valve Body (307-01 Automatic Transmission/Transaxle, In-vehicle Repair). |
| P0705 | Transmission position switch fault. Transmission position switch open or short circuit. | CLEAR ALL DTC's. TEST the system for normal operation. If DTC resets, install a new TCM and Main Control Valve Body. For additional information,<br>REFER to: Transmission Control Module (TCM) and Main Control Valve Body (307-01 Automatic Transmission/Transaxle, In-vehicle Repair). |
| P1783 | Over temperature shutdown. Transmission overheated. | Check transmission for cause of overheating, refer to workshop manual section 307-02. |
| P1794 | Transmission power supply fault. Transmission power supply open or short circuit. | Refer to Visual Inspection Chart in this section. |
| P0610 | Engine control module (ECM) and TCM fault. Incorrect configuration or calibration loaded for ECM and TCM. | • NOTE: If DTC has been logged after a new TCM has been fitted and flashed, an error has occurred during the process. Check the file used for flashing process is correct and repeat the flash process.<br><br>CHECK the ECM and TCM for correct software configuration and calibration. CLEAR ALL DTC's. TEST the system for normal operation. |
| P0651 | Transmission pressure regulator and solenoid fault. Transmission pressure regulator and solenoid supply open or short circuit. | CLEAR ALL DTC's. TEST the system for normal operation. If DTC resets, install a new TCM and Main Control Valve Body. For additional information,<br>REFER to: Transmission Control Module (TCM) and Main Control Valve Body (307-01 Automatic Transmission/Transaxle, In-vehicle Repair). |
| P0606 | Watchdog monitoring locking mechanism. | CLEAR ALL DTC's. TEST the system for normal operation. If DTC resets, install a new TCM and Main Control Valve Body. For additional information,<br>REFER to: Transmission Control Module (TCM) and Main Control Valve Body (307-01 Automatic Transmission/Transaxle, In-vehicle Repair). |
| P0741 | Torque converter clutch (TCC) fault. TCC stuck open position. | CLEAR ALL DTC's. TEST the system for normal operation. If DTC resets, install a new torque converter. |
| P0750 | Transmission pressure regulator 1 fault. Transmission pressure regulator 1 supply open or short circuit. | CLEAR ALL DTC's. TEST the system for normal operation. If DTC resets, install a new TCM and Main Control Valve Body. For additional information,<br>REFER to: Transmission Control Module (TCM) and Main Control Valve Body (307-01 Automatic Transmission/Transaxle, In-vehicle Repair). |
| P0753 | Transmission pressure regulator 1 fault. Transmission pressure regulator 1 failed plausibility check. | CLEAR ALL DTC's. TEST the system for normal operation. If DTC resets, install a new TCM and Main Control Valve Body. For additional information,<br>REFER to: Transmission Control Module (TCM) and Main Control Valve Body (307-01 Automatic Transmission/Transaxle, In-vehicle Repair). |
| P0755 | Transmission pressure regulator 2 fault. Transmission pressure regulator 2 supply open or short circuit. | CLEAR ALL DTC's. TEST the system for normal operation. If DTC resets, install a new TCM and Main Control Valve Body. For additional information,<br>REFER to: Transmission Control Module (TCM) and Main Control Valve Body (307-01 Automatic Transmission/Transaxle, In-vehicle Repair). |
| P0758 | Transmission pressure regulator 2 fault. Transmission pressure regulator 2 failed plausibility check. | CLEAR ALL DTC's. TEST the system for normal operation. If DTC resets, install a new TCM and Main Control Valve Body. For additional information,<br>REFER to: Transmission Control Module (TCM) and Main Control Valve Body (307-01 Automatic Transmission/Transaxle, In-vehicle Repair). |
| P0760 | Transmission pressure regulator 3 fault. Transmission pressure regulator 3 supply open or short circuit. | CLEAR ALL DTC's. TEST the system for normal operation. If DTC resets, install a new TCM and Main Control Valve Body. For additional information,<br>REFER to: Transmission Control Module (TCM) and Main Control Valve Body (307-01 Automatic Transmission/Transaxle, In-vehicle Repair). |
| P0763 | Transmission pressure regulator 3 fault. Transmission pressure regulator 3 failed plausibility check. | CLEAR ALL DTC's. TEST the system for normal operation. If DTC resets, install a new TCM and Main Control Valve Body. For additional information,<br>REFER to: Transmission Control Module (TCM) and Main Control Valve Body (307-01 Automatic Transmission/Transaxle, In-vehicle Repair). |

GETtheMANUALS.org

| DTC | Description | Action |
|---|---|---|
| P0765 | Transmission pressure regulator 4 fault. Transmission pressure regulator 4 supply open or short circuit. | CLEAR ALL DTC's. TEST the system for normal operation. If DTC resets, install a new TCM and Main Control Valve Body. For additional information, REFER to: Transmission Control Module (TCM) and Main Control Valve Body (307-01 Automatic Transmission/Transaxle, In-vehicle Repair). |
| P0768 | Transmission pressure regulator 4 fault. Transmission pressure regulator 4 failed plausibility check. | CLEAR ALL DTC's. TEST the system for normal operation. If DTC resets, install a new TCM and Main Control Valve Body. For additional information, REFER to: Transmission Control Module (TCM) and Main Control Valve Body (307-01 Automatic Transmission/Transaxle, In-vehicle Repair). |
| P0770 | Transmission pressure regulator 5 fault. Transmission pressure regulator 5 supply open or short circuit. | CLEAR ALL DTC's. TEST the system for normal operation. If DTC resets, install a new TCM and Main Control Valve Body. For additional information, REFER to: Transmission Control Module (TCM) and Main Control Valve Body (307-01 Automatic Transmission/Transaxle, In-vehicle Repair). |
| P0773 | Transmission pressure regulator 5 fault. Transmission pressure regulator 5 failed plausibility check. | CLEAR ALL DTC's. TEST the system for normal operation. If DTC resets, install a new TCM and Main Control Valve Body. For additional information, REFER to: Transmission Control Module (TCM) and Main Control Valve Body (307-01 Automatic Transmission/Transaxle, In-vehicle Repair). |
| P0740 | Transmission pressure regulator 6 fault. Transmission pressure regulator 6 supply open or short circuit. | CLEAR ALL DTC's. TEST the system for normal operation. If DTC resets, install a new TCM and Main Control Valve Body. For additional information, REFER to: Transmission Control Module (TCM) and Main Control Valve Body (307-01 Automatic Transmission/Transaxle, In-vehicle Repair). |
| P0743 | Transmission pressure regulator 6 failed plausibility check. | CLEAR ALL DTC's. TEST the system for normal operation. If DTC resets, install a new TCM and Main Control Valve Body. For additional information, REFER to: Transmission Control Module (TCM) and Main Control Valve Body (307-01 Automatic Transmission/Transaxle, In-vehicle Repair). |
| P0787 | Transmission shift solenoid valve 1 fault. Transmission shift solenoid valve 1 supply open or short circuit. | CLEAR ALL DTC's. TEST the system for normal operation. If DTC resets, install a new TCM and Main Control Valve Body. For additional information, REFER to: Transmission Control Module (TCM) and Main Control Valve Body (307-01 Automatic Transmission/Transaxle, In-vehicle Repair). |
| P0788 | Transmission shift solenoid valve 1 fault. Transmission shift solenoid valve 1 failed plausibility check. | CLEAR ALL DTC's. TEST the system for normal operation. If DTC resets, install a new TCM and Main Control Valve Body. For additional information, REFER to: Transmission Control Module (TCM) and Main Control Valve Body (307-01 Automatic Transmission/Transaxle, In-vehicle Repair). |
| P0730 | Selection fault in all transmission gears. Internal transmission gear ratio fault. | Carry out the transmission fluid check in this section. CLEAR ALL DTC's. Carry out a drive cycle test. |
| P0731 | 1st gear selection fault. Internal transmission gear ratio fault. | Carry out the transmission fluid check in this section. CLEAR ALL DTC's. TEST the system for normal operation. If DTC resets, install a new Transmission. For additional information, REFER to: Transmission - 2.5L NA V6 - AJV6/3.0L NA V6 - AJ27 (307-01 Automatic Transmission/Transaxle, Removal). |
| P0732 | 2nd gear selection fault. Internal transmission gear ratio fault. | Carry out the transmission fluid check in this section. CLEAR ALL DTC's. TEST the system for normal operation. If DTC resets, install a new Transmission. For additional information, REFER to: Transmission - 2.5L NA V6 - AJV6/3.0L NA V6 - AJ27 (307-01 Automatic Transmission/Transaxle, Removal). |
| P0733 | 3rd gear selection fault. Internal transmission gear ratio fault. | Carry out the transmission fluid check in this section. CLEAR ALL DTC's. TEST the system for normal operation. If DTC resets, install a new Transmission. For additional information, REFER to: Transmission - 2.5L NA V6 - AJV6/3.0L NA V6 - AJ27 (307-01 Automatic Transmission/Transaxle, Removal). |
| P0734 | 4th gear selection fault. Internal transmission gear ratio fault. | Carry out the transmission fluid check in this section. CLEAR ALL DTC's. TEST the system for normal operation. If DTC resets, install a new Transmission. For additional information, REFER to: Transmission - 2.5L NA V6 - AJV6/3.0L NA V6 - AJ27 (307-01 Automatic Transmission/Transaxle, Removal). |
| P0735 | 5th gear selection fault. Internal transmission gear ratio fault. | Carry out the transmission fluid check in this section. CLEAR ALL DTC's. TEST the system for normal operation. If DTC resets, install a new Transmission. For additional information, REFER to: Transmission - 2.5L NA V6 - AJV6/3.0L NA V6 - AJ27 (307-01 Automatic Transmission/Transaxle, Removal). |
| P0729 | 6th gear selection fault. Internal transmission gear ratio fault. | Carry out the transmission fluid check in this section. CLEAR ALL DTC's. TEST the system for normal operation. If DTC resets, install a new Transmission. For additional information, REFER to: Transmission - 2.5L NA V6 - AJV6/3.0L NA V6 - AJ27 (307-01 Automatic Transmission/Transaxle, Removal). |
| P0780 | Gear load fault in all transmission gears. Incorrect calculation during gear shift. | Carry out the transmission fluid check in this section. CLEAR ALL DTC's. TEST the system for normal operation. If DTC resets, reset adaptions, reconfigure TCM , perform road test with correct drive cycles. REFER to: Transmission - 2.5L NA V6 - AJV6/3.0L NA V6 - AJ27 (307-01 Automatic Transmission/Transaxle, Removal). |
| P0781 | Gear load fault from 1st to 2nd gear. Incorrect calculation during gear shift. | Carry out the transmission fluid check in this section. CLEAR ALL DTC's. TEST the system for normal operation. If DTC resets, reset adaptions, reconfigure TCM , perform road test with correct drive cycles. REFER to: Transmission - 2.5L NA V6 - AJV6/3.0L NA V6 - AJ27 (307-01 Automatic Transmission/Transaxle, Removal). |
| P0782 | Gear load fault from 2nd to 3rd gear. Incorrect calculation during gear shift. | Carry out the transmission fluid check in this section. CLEAR ALL DTC's. TEST the system for normal operation. If DTC resets, reset adaptions, reconfigure TCM , perform road test with correct drive cycles. REFER to: Transmission - 2.5L NA V6 - AJV6/3.0L NA V6 - AJ27 (307-01 Automatic Transmission/Transaxle, Removal). |
| P0783 | Gear load fault from 3rd to 4th gear. Incorrect calculation during gear shift. | Carry out the transmission fluid check in this section. CLEAR ALL DTC's. TEST the system for normal operation. If DTC resets, reset adaptions, reconfigure TCM , perform road test with correct drive cycles. REFER to: Transmission - 2.5L NA V6 - AJV6/3.0L NA V6 - AJ27 (307-01 Automatic Transmission/Transaxle, Removal). |
| P0784 | Gear load fault from 4th to 5th gear. Incorrect calculation during gear shift. | Carry out the transmission fluid check in this section. CLEAR ALL DTC's. TEST the system for normal operation. If DTC resets, reset adaptions, reconfigure TCM , perform road test with correct drive cycles. REFER to: Transmission - 2.5L NA V6 - AJV6/3.0L NA V6 - AJ27 (307-01 Automatic Transmission/Transaxle, Removal). |
| P0829 | Gear load fault from 5th to 6th gear. Incorrect calculation during gear shift. | Carry out the transmission fluid check in this section. CLEAR ALL DTC's. TEST the system for normal operation. If DTC resets, reset adaptions, reconfigure TCM , perform road test with correct drive cycles. REFER to: Transmission - 2.5L NA V6 - AJV6/3.0L NA V6 - AJ27 (307-01 Automatic Transmission/Transaxle, Removal). |

GETtheMANUALS.org

| DTC | Description | Action |
|---|---|---|
| P0781 | Gear load fault from 2nd to 1st gear. Incorrect calculation during gear shift. | Carry out the transmission fluid check in this section. CLEAR ALL DTC's. TEST the system for normal operation. If DTC resets, install a new Transmission. For additional information, REFER to: Transmission - 2.5L NA V6 - AJV6/3.0L NA V6 - AJ27 (307-01 Automatic Transmission/Transaxle, Removal). |
| P0782 | Gear load fault from 3rd to 2nd gear. Incorrect calculation during gear shift. | Carry out the transmission fluid check in this section. CLEAR ALL DTC's. TEST the system for normal operation. If DTC resets, install a new Transmission. For additional information, REFER to: Transmission - 2.5L NA V6 - AJV6/3.0L NA V6 - AJ27 (307-01 Automatic Transmission/Transaxle, Removal). |
| P0783 | Gear load fault from 4th to 3rd gear. Incorrect calculation during gear shift. | Carry out the transmission fluid check in this section. CLEAR ALL DTC's. TEST the system for normal operation. If DTC resets, install a new Transmission. For additional information, REFER to: Transmission - 2.5L NA V6 - AJV6/3.0L NA V6 - AJ27 (307-01 Automatic Transmission/Transaxle, Removal). |
| P0784 | Gear load fault from 5th to 4th gear. Incorrect calculation during gear shift. | Carry out the transmission fluid check in this section. CLEAR ALL DTC's. TEST the system for normal operation. If DTC resets, install a new Transmission. For additional information, REFER to: Transmission - 2.5L NA V6 - AJV6/3.0L NA V6 - AJ27 (307-01 Automatic Transmission/Transaxle, Removal). |
| P0829 | Gear load fault from 6th to 5th gear. Incorrect calculation during gear shift. | Carry out the transmission fluid check in this section. CLEAR ALL DTC's. TEST the system for normal operation. If DTC resets, install a new Transmission. For additional information, REFER to: Transmission - 2.5L NA V6 - AJV6/3.0L NA V6 - AJ27 (307-01 Automatic Transmission/Transaxle, Removal). |
| P1798 | CAN network timed out to instrument cluster. CAN network fault. | Perform network checks as per section 418-00 in the workshop manual, repair any faults on the network. Clear DTC and retest system. Run diagnostic checks on Instrument Cluster as per workshop manual section 413-01. Repair any faults, clear DTCs and retest system. |
| P1797 | CAN network timed out to engine management system. CAN network fault. | Perform network checks as per section 418-00 in the workshop manual, repair any faults on the network. Clear DTC and retest system. Run diagnostic checks on Electronic Engine Controls as per workshop manual section 303-14. Repair any faults, clear DTCs and retest system. |
| P0702 | Electrical system undervoltage. Charging fault whilst engine is running. | Check vehicle battery and charging system, refer to workshop manual sections 414-01 and 414-02. Rectify any faults found, clear DTCs and retest systems. |
| P1774 | CAN network timed out to J-Gate. CAN network fault. | Perform network checks as per section 418-00 in the workshop manual, repair any faults on the network. Clear DTC and retest system. Run diagnostic checks on the Automatic Transmission External Controls as per workshop manual section 307-05. Repair any faults, clear DTCs and retest system. |
| P1799 | CAN network timed out to ABS system. CAN network fault. | Perform network checks as per section 418-00 in the workshop manual, repair any faults on the network. Clear DTC and retest system. Run diagnostic checks on the ABS as per workshop manual section 206-09. Repair any faults, clear DTCs and retest system. |
| P1749 | Invalid Park and Neutral signal. Starter motor inoperative. | Check starting system for faults, refer to workshop manual section 303-06. Repair any faults, clear DTCs and retest system |
| P0666 | Substrate temperature sensor fault. Substrate temperature sensor open or short circuit. | CLEAR ALL DTC's. TEST the system for normal operation. Carry out a drive cycle test. If DTC resets, install a new TCM and Main Control Valve Body. For additional information, REFER to: Transmission Control Module (TCM) and Main Control Valve Body (307-01 Automatic Transmission/Transaxle, In-vehicle Repair). |
| P0641 | All sensor's supply voltage fault. | CLEAR ALL DTC's. TEST the system for normal operation. If DTC resets, install a new TCM and Main Control Valve Body. For additional information, REFER to: Transmission Control Module (TCM) and Main Control Valve Body (307-01 Automatic Transmission/Transaxle, In-vehicle Repair). |
| P1605 | TCM fault. Battery buffered RAM. | Remove transit relay if fitted, CLEAR ALL DTC's. TEST the system for normal operation. If DTC resets, install a new TCM and Main Control Valve Body. For additional information, REFER to: Transmission Control Module (TCM) and Main Control Valve Body (307-01 Automatic Transmission/Transaxle, In-vehicle Repair). |
| P0706 | Implausible J-Gate position. No manual selection of gears. | Inspect J-Gate for faults, refer to workshop manual section 307-05. Repair faults, clear DTCs and retest the system. |
| P0825 | J-gate position fault on the manual side of the J-Gate. | CLEAR ALL DTC's. TEST the system for normal operation. If DTC resets, INSTALL new J-gate as necessary. |
| P0709 | Intermediate J-Gate position. | CLEAR ALL DTC's. TEST the system for normal operation. If DTC resets, INSTALL new J-gate as necessary. |

## Transmission Link Harness Electrical Connector Layout

### Electrostatic Discharge

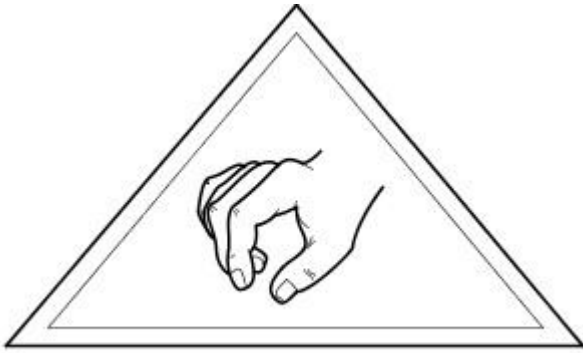

E31218

CAUTION: When working with the transmission control module (TCM) and main control valve body, all suitable safety precautions must be taken to protect the component against electrostatic discharge. Failure to follow these instructions may result in component damage.

Make sure all possible safety precautions are taken to protect the TCM and main control valve body unit against electrostatic discharge

Personal Wrist-Band Earthing

Earthing (grounding) by means of a wrist band or strap is the most reliable method of diverting electrostatic charges away from working personnel, and should therefore be used wherever possible, particularly if the person concerned is working while seated. The wrist band earthing (grounding) device consists of a bracelet closely attached to the wrist and a spiral earthing (grounding) cable connecting it to the earthing (grounding) contact point. This system must include a quick-release device so that the wrist can be released in the event of

SETtheMANUALS.org

danger.

Shoes and Foot Earthing Straps

Electrically conductive shoes should be worn by persons who mainly work standing up or either standing or sitting in ESD protection zones, particularly if wrist band earthing (grounding) is impracticable. The standard calls for ESD shoes to record values between 0 and 35 Mega-ohms (MOhm) resistance. However, for antistatic working shoes resistance values between 0.1 and 1000 MOhm are called for, and a through-conducting resistance for protective shoes of 0.1 to 100 MOhm. A lower limit value of not less than 0.1 MOhm must be maintained on account of the contact voltage risk. For this reason the minimum value has been set contrary to the standard at the higher figure of 0.75 MOhm.

### Transmission Link Harness Electrical Connector Layout

• CAUTIONS:

When working with the transmission control module (TCM) and main control valve body, all suitable safety precautions must be taken to protect the component against electrostatic discharge.

Do not carry out any electrical tests on the TCM and main control valve body. Failure to follow these instructions may result in component damage.

Make sure all suitable safety precautions are taken to protect the transmission control module (TCM) and main control valve body electrical connector pins against electrostatic discharge.

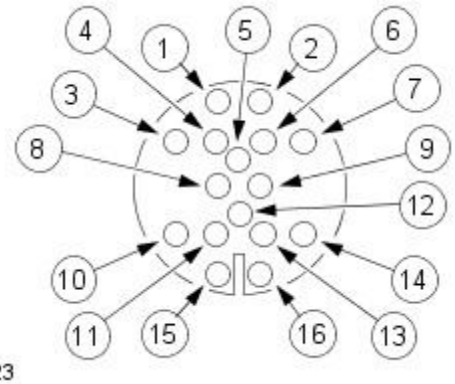

E31323

**Transmission Link Harness Electrical Connector**

| Pin No | Description |
|---|---|
| 1 | Not used |
| 2 | CAN Low |
| 3 | Not used |
| 4 | Not used |
| 5 | Not used |
| 6 | CAN High |
| 7 | Not used |
| 8 | Not used |
| 9 | Ignition supply |
| 10 | Park / Neutral Signal |
| 11 | Not used |
| 12 | Not used |
| 13 | Ground |
| 14 | Power supply +v |
| 15 | Not used |
| 16 | Ground |

## Clutch Application Chart

| Transmission State | Clutch/Clutches Applied During Selected Gear | | | | | |
|---|---|---|---|---|---|---|
| | A | B | C | D | E | CC |
| **D1** | * | - | - | * | - | * |
| **D2** | * | - | * | - | - | * |
| **D3** | * | * | - | - | - | * |
| **D4** | * | - | - | - | * | * |
| **D5** | - | * | - | - | * | * |
| **D6** | - | - | * | - | * | * |
| **P** | - | - | - | * | - | - |
| **R** | - | * | - | * | - | - |
| **N** | - | - | - | * | - | - |

## Solenoids

• CAUTIONS:

When working with the transmission control module (TCM) and main control valve body, all suitable safety precautions must be taken to protect the component against electrostatic discharge.

Do not carry out any electrical tests on the TCM and main control valve body. Failure to follow these instructions may result in component damage.

GETtheMANUALS.org

The hydraulic module contains one solenoid valve. The solenoid valve is actuated by the TCM and has two positions (open or closed), it is

used to switch the position valve.

There are six electronic pressure control valves, these convert an electric current into a proportional hydraulic pressure. They are energized by the TCM and actuate the valves belonging to the relevant switching elements.

Two types of electronic pressure regulator are installed:

1. **1.** Pressure regulator with a rising characteristic (1,3,6 green cap) i.e. as current increases pressure increases (0mA = 0 bar / 700mA = 4.6 bar)

2. **2.** Pressure regulator with a falling characteristic (2,4,5 black cap) i.e. as current increases the pressure drops (0 mA = 4.6 bar / 700 mA = 0 bar)

Both types of regulator have a resistance value of approximately 5 Ohms at 20°C.

### Solenoid Application Chart

| Selected Gear | Solenoid / Pressure Regulators Applied During Selected Gear | | | | | | |
|---|---|---|---|---|---|---|---|
| | SV1 | PR1 | PR2 | PR3 | PR4 | PR5 | PR6 |
| D1 | - | * | - | - | * | * | * |
| D2 | - | * | - | * | - | * | * |
| D3 | - | * | * | - | - | * | * |
| D4 | * | * | - | - | * | * | * |
| D5 | * | - | * | - | * | * | * |
| D6 | * | - | - | * | * | * | * |

- SV1: Solenoid valve
- PR1: Clutch A
- PR2: Clutch B
- PR3: Clutch C
- PR4: Clutch D& E
- PR5: System Pressure
- PR6: Torque Converter Clutch

## System inputs and outputs

### System inputs

The TCM uses the permanent voltages supply to support and to maintain data in the random access memory (RAM).

The Term.15 input is used to wake up the TCM. Once awake the TCM commences its initialization sequence. This input is not a power supply input to the TCM. For initialization to commence the ignition must be switched to the "II2" position and Vbat above 7V but below 16V (30ms after term.15 signal on, the initialization of the TCM starts). Initialization time is 500ms max. When initialization is finished, the Drive Program is started and TCM has full functionality.

The TCM has one internal solenoid ground for all internal solenoids (SV and PR).

This internal input acts as the ground for position switch. The TCM requires two vehicle ground supplies. (Term.31). Both ground wires are linked to one grounding point on the vehicle. The TCM incorporates polarity reversal protection.

### System outputs

The P/N signal (from the internal position sensor) is used to ensure that the engine is only started with the transmission gear selector in either the Park or Neutral position. When the selector is in either Park or Neutral this output is activated. This in turn closes a relay that allows the starter to be engaged if allowed by the Engine management system. If this output fails the electronic engine controls system uses a CAN bus signal supplied by the TCM to allow the engine to start.

### Transmission control

The selector lever can be used to engage Park through to drive (D) mechanically. The link between the lever and the transmission is by a cable.

The manual side of the shifter, 5 through to position 2 are selected electronically by the CAN bus. Integrated with this are functions for gear selected illumination, brake shift interlock and keylock interlock system. For additional information refer to the workshop manual section 307-05.

GETtheMANUALS.org

# Automatic Transmission / Transaxle - Transmission Fluid Drain and Refill

General Procedures

| Special Tool(s) | |
|---|---|
| 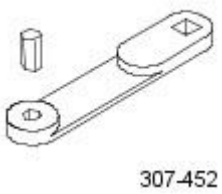 307-452 | Adaptor<br>307-452 |

## Drain

### Vehicles with diesel engine

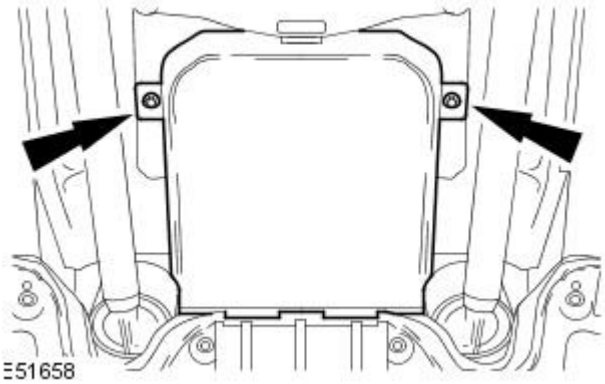


**1.** Remove the transmission undertray.

### All vehicles

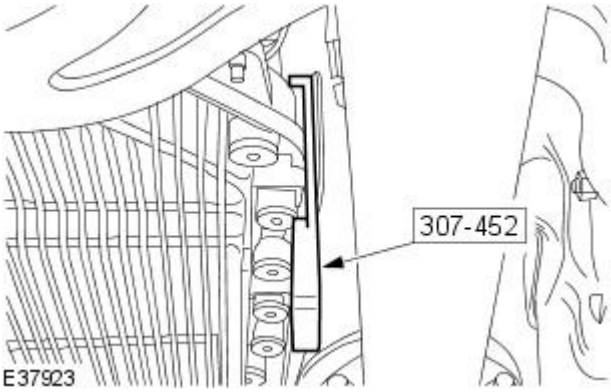


**2.** Raise and support the vehicle.
For additional information, refer to: Lifting (100-02 Jacking and Lifting, Description and Operation).

**3.** Place a suitable container under the transmission.

**4.** Using the special tool, remove the transmission fluid fill plug.

- Remove and discard the transmission fluid fill plug.

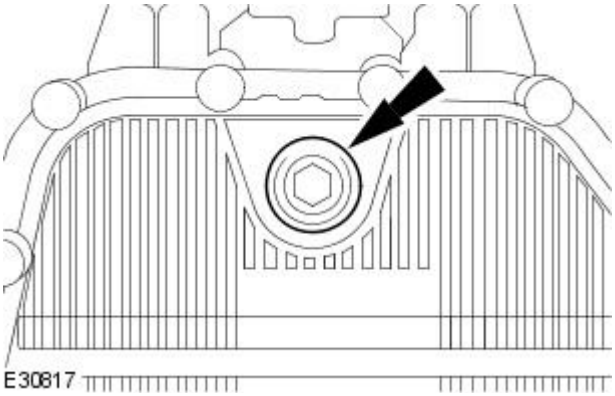


**5.** CAUTION: If the automatic transmission fluid is very dirty or it contains metallic particles, then along with a new transmission, install a new automatic transmission fluid cooler and lines.

Remove and discard the transmission fluid drain plug.

GETtheMANUALS.org

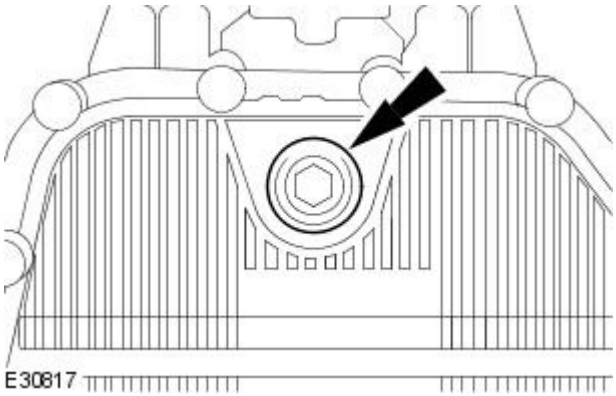


6. Install the new transmission fluid drain plug.
   - Tighten to 8 Nm.

## Refill

### All vehicles

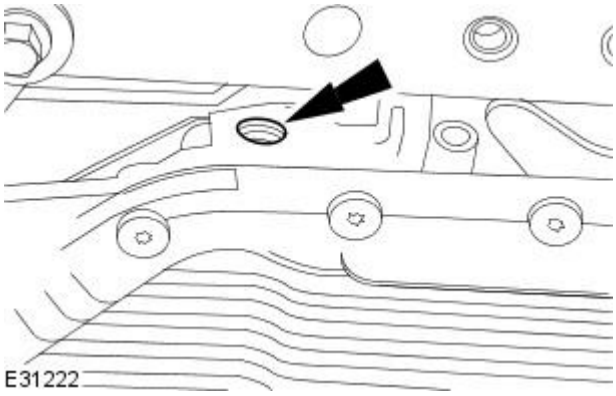


1. NOTE: Use transmission fluid meeting Jaguar specification.

   Fill the transmission with 8 liters of transmission fluid through the transmission fluid filler plug hole.

2. Carry out a transmission fluid level check.
   For additional information, refer to: Transmission Fluid Level Check (307-01 Automatic Transmission/Transaxle, General Procedures).

GETtheMANUALS.org

# Automatic Transmission / Transaxle - Transmission Fluid Level Check

General Procedures

| Special Tool(s) | |
|---|---|
| 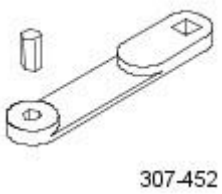 307-452 | Adaptor<br>307-452 |

## Check

### All vehicles

**1.** The follow steps must be observed before starting the transmission fluid level check.

1. The vehicle must be on a horizontal ramp.
2. The parking brake must be applied.
3. The engine must be running for 2 minutes with the transmission selector lever in the "P" position.

**2.** Connect the Jaguar Approved Diagnostic System.

**3.** Make sure the transmission selector lever is in the "P" position.

**4.** NOTE: Make sure the transmission fluid temperature is below 30 °C (86 °F) on the Jaguar Approved Diagnostic System.

With the engine running and the foot brake applied, circulate the transmission fluid by:

1. Moving the transmission selector lever to the "R" position
2. Waiting for three seconds.
3. Moving the transmission selector lever to the "D" position
4. Waiting for three seconds.
5. Moving the transmission selector lever to the "P" position

**5.** Raise and support the vehicle.
For additional information, refer to: Lifting (100-02 Jacking and Lifting, Description and Operation).

### Vehicles with diesel engine

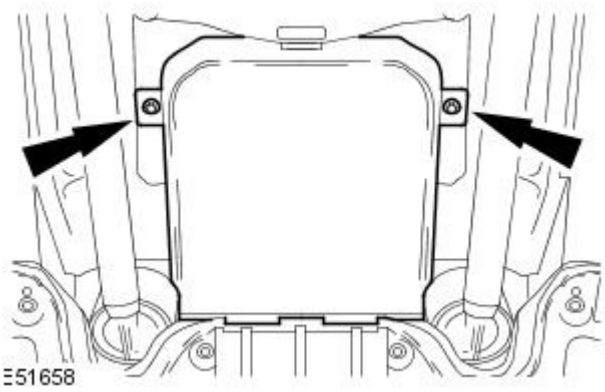


**6.** Remove the transmission undertray.

### All vehicles

**7.** Place a suitable container under the transmission fluid filler plug.

GETtheMANUALS.org

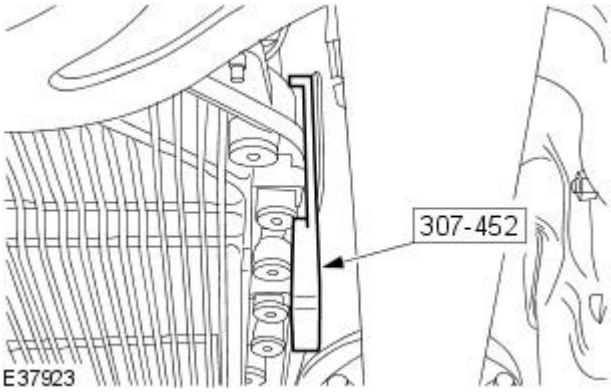


**8.** WARNING: Make sure that care is exercised near rotating parts. Failure to follow this instruction may result in personal injury.

With the engine running, using the special tool remove the transmission fluid fill plug.

- Remove and discard the transmission fluid fill plug.

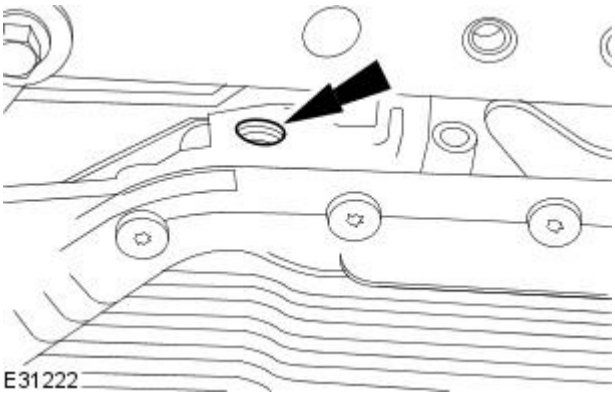


**9.** NOTE: Use transmission fluid meeting Jaguar specification.

If the transmission fluid does not come out of the transmission fluid filler plug hole the transmission fluid level is insufficient. If this is the case add the transmission fluid in 0.5 liter units into the transmission fluid filler plug hole until fluid comes out.

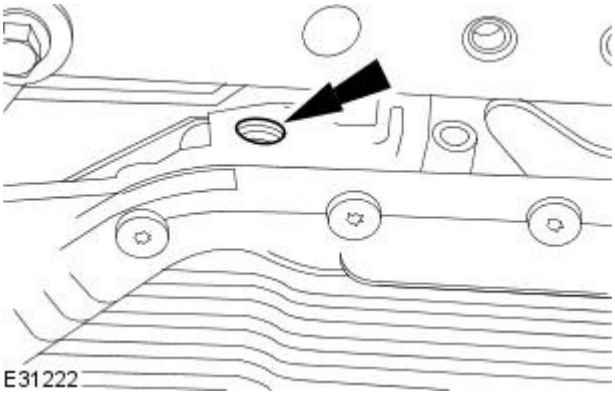


**10.** NOTE: Make sure the transmission fluid temperature does not exceed 50 °C (122 °F). If the transmission fluid temperature does exceed 50 °C (122 °F) stop the transmission fluid level check and allow the transmission fluid to cool until the temperature is below 30 °C (86°F).

Allow the transmission fluid to drain from the transmission fluid filler plug hole until the flow almost stops.

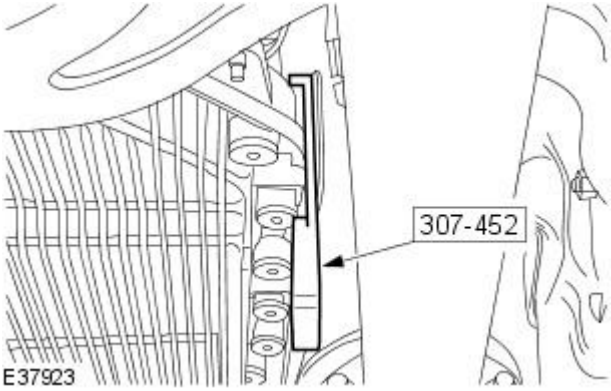


**11.** NOTE: Install a new sealing washer.

Using the special tool, install the new transmission fluid fill plug.

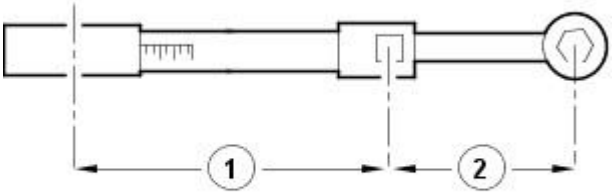


**12.** CAUTION: Make sure the transmission fluid fill plug is tightened to the correct specification. Failure to follow this instruction may result in damage to the vehicle.

Using the special tool and a torque wrench, tighten the transmission fluid fill plug.

- Tighten the transmission fluid fill plug to the torque given by the calculation
- To make sure the transmission fill plug is torqued to the correct specification. Using the special tool and a torque wrench the following calculation steps must be followed.
  1. Step 1. Multiply 35 Nm by the effective length of the torque wrench (1).
  2. Step 2. Add the effective length of the special tool (2) to the effective length of the torque wrench (1).

GETtheMANUALS.org

3. Step 3. Divide the total of step 1 by the total of step 2.
4. Step 4. Set the torque wrench to the figure arrived at in step 3.

- Tighten the transmission fluid fill plug to the torque given by the calculation.

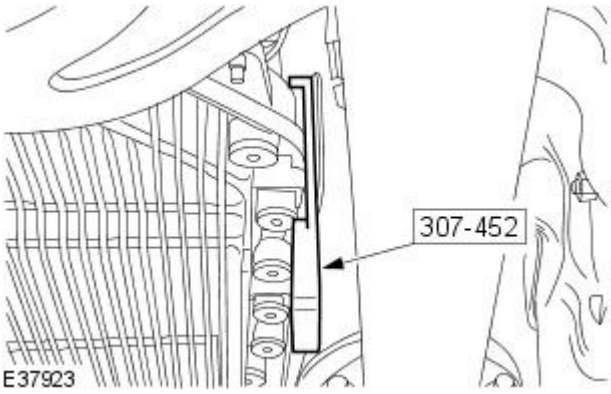


**13.** Remove the special tool.

**14.** Remove the container.

## Vehicles with diesel engine

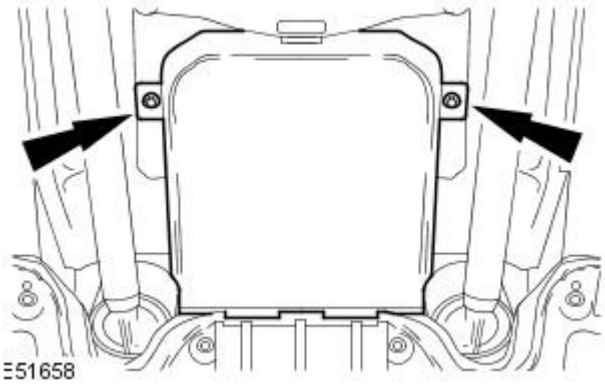


**15.** Install the transmission undertray.

## All vehicles

**16.** Lower the vehicle.

**17.** Disconnect the Jaguar Approved Diagnostic System.

GETtheMANUALS.org

# Automatic Transmission / Transaxle - Extension Housing Seal

In-vehicle Repair

| Special Tool(s) | |
|---|---|
| 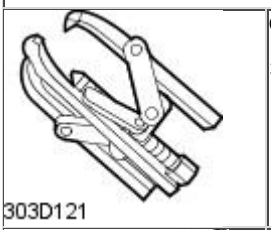 303D121 | Crankshaft Damper Remover<br><br>303-D121 |
| 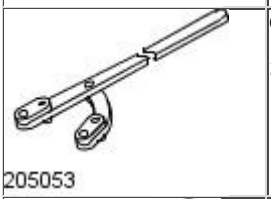 205053 | Output Shaft Flange Holding Tool<br><br>205-053 |
| 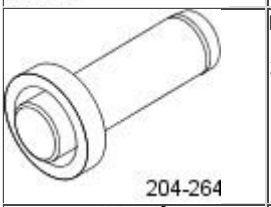 204-264 | Pinion Seal Replacer<br><br>204-264 |
| 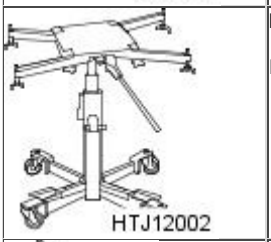 HTJ12002 | Powertrain Assembly Jack<br><br>HTJ1200-2 |
| 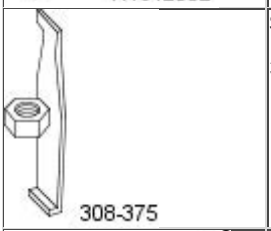 308-375 | Seal Remover Input and Output<br><br>308-375 |
| 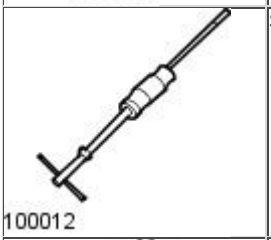 100012 | Slide Hammer<br><br>100-012 |
| 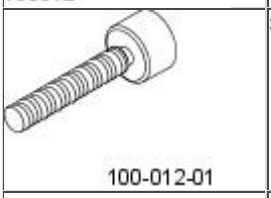 100-012-01 | Slide Hammer Adaptor<br><br>100-012-01 |
| 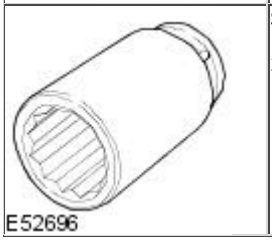 E52696 | Socket Output Flange Remover/Installer<br><br>205-789 |

## Removal

GETtheMANUALS.org

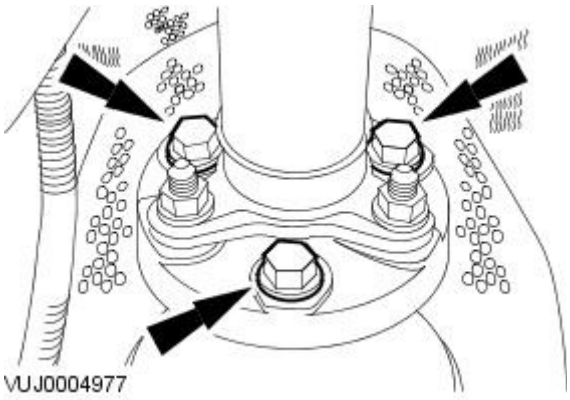


**1.** CAUTIONS:

Under no circumstances must the flexible coupling (or its fixings) be loosened or removed from the driveshaft. Failure to follow this instruction may result in damage to the vehicle.

Make sure the front of the driveshaft does not put an excessive load on the center bearing. Failure to follow this instruction may result in damage to the vehicle.

Detach the driveshaft from the transmission flange.

- Mark the position of the driveshaft in relation to the transmission flange.
- Mark the position of each nut and bolt in relation to the transmission flexible joint.

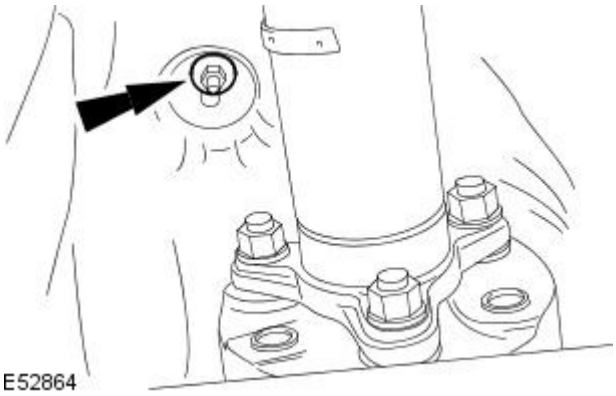


**2.** Loosen the heat shield retaining nut.

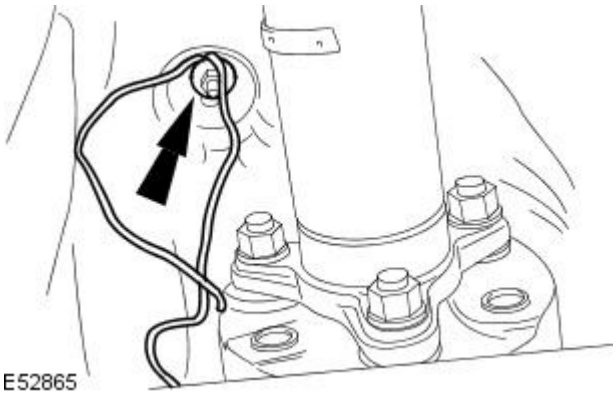


**3.** Install suitable cord to the heat shield retaining nut stud.

- Tighten the retaining nut.

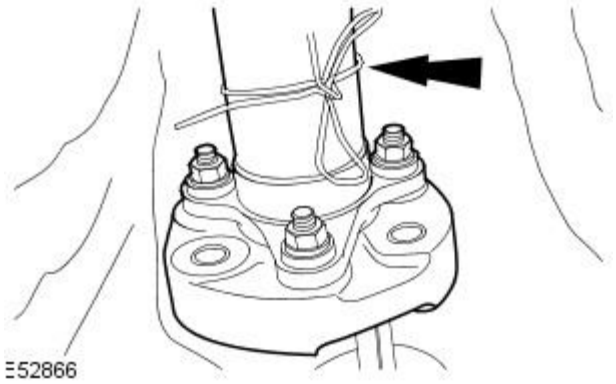


**4.** Reposition the driveshaft.

GETtheMANUALS.org

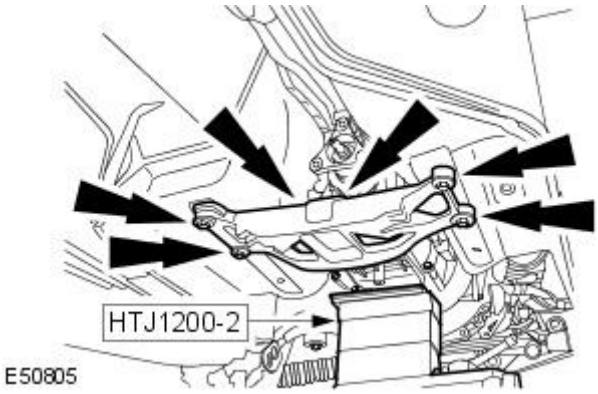


**5.** Using the special tool, remove the transmission support.

- Lower the transmission to a siutable height.

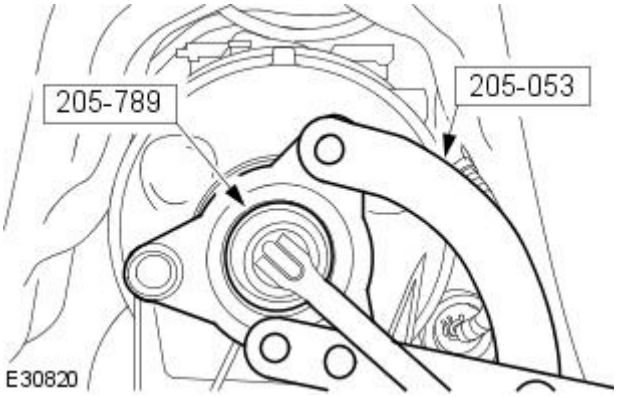


**6.** Using the special tools, remove and discard the output shaft flange retaining nut.

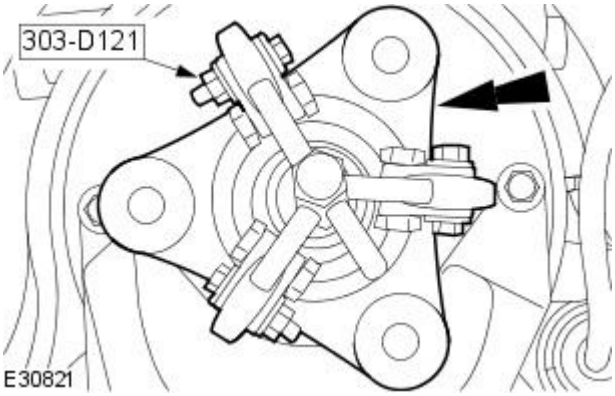


**7.** Using the special tool, remove the output shaft flange.

- Remove the output shaft flange spacing shim.

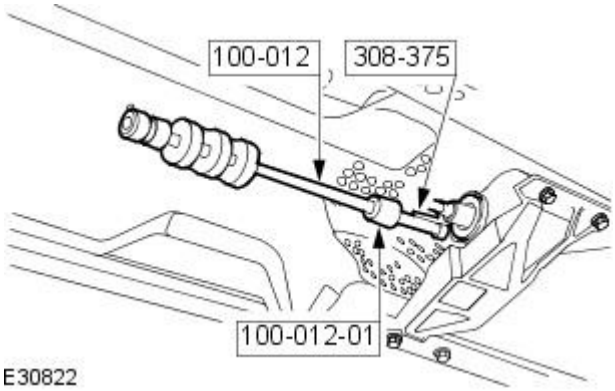


**8.** CAUTION: Make sure the transmission housing seal face is not damaged when removing the extension housing seal. Failure to follow this instruction may result in damage to the vehicle.

Using the special tools, remove the extension housing seal.

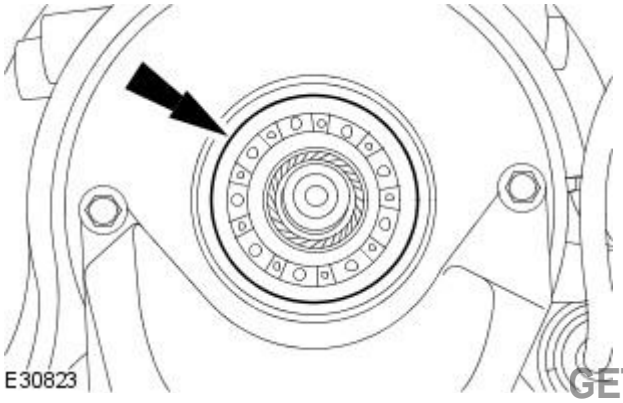


**9.** NOTE: Using a suitable metal surface cleaner meeting Jaguar specification, clean the seal face on the housing before installing the new seal.

Clean and inspect the transmission housing seal face.

GETtheMANUALS.org

## Installation

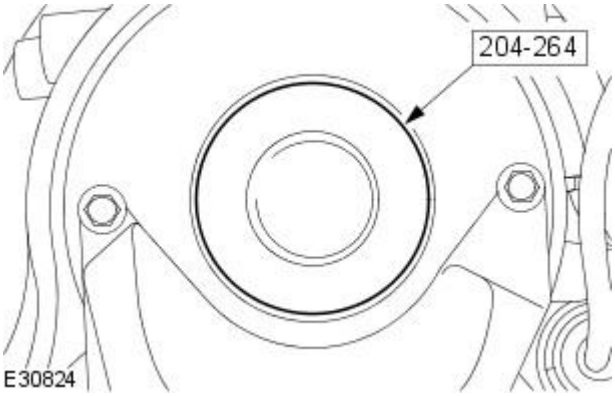


**1.** Using the special tool, install the extension housing seal.

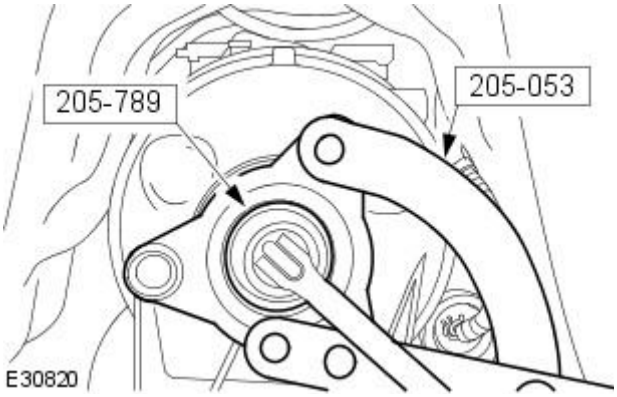


**2.** Using the special tools install a new output shaft flange retaining nut.

- Install the output shaft flange spacing shim.
- Install the output shaft flange.
- Tighten to 60 Nm.

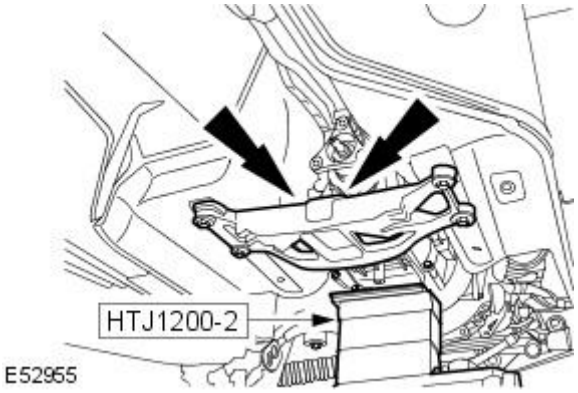


**3.** Install the transmission support.

- Using the special tool, raise the transmission.
- Tighten to 55 Nm.

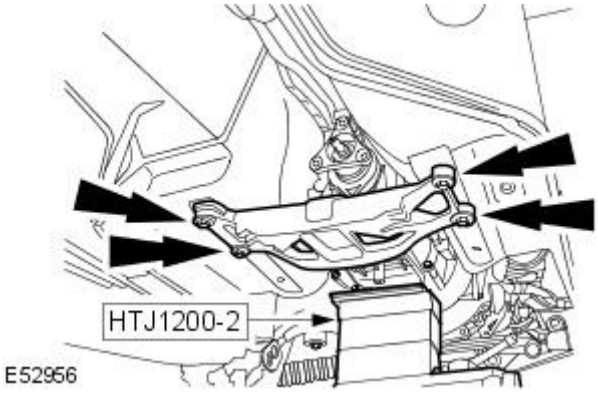


**4.** Tighten to 48 Nm.

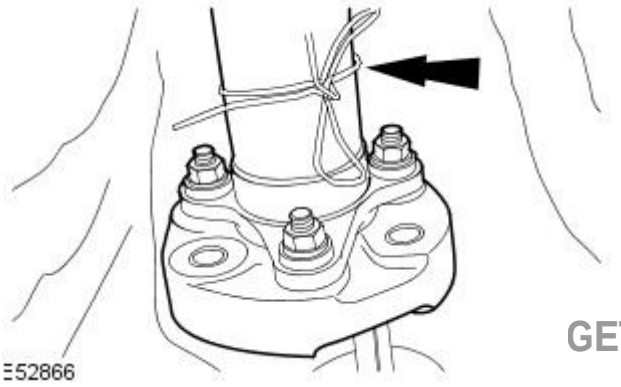


**5.** CAUTION: Make sure the front of the driveshaft does not put an excessive load on the center bearing. Failure to follow this instruction may result in damage to the vehicle.

Reposition the driveshaft.

- Undo the cord.

GETtheMANUALS.org

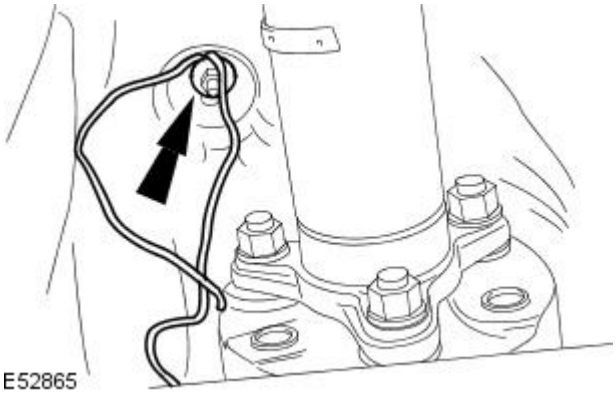


**6.** Loosen the retaining nut.

- Remove the cord from the heat shield retaining nut stud.

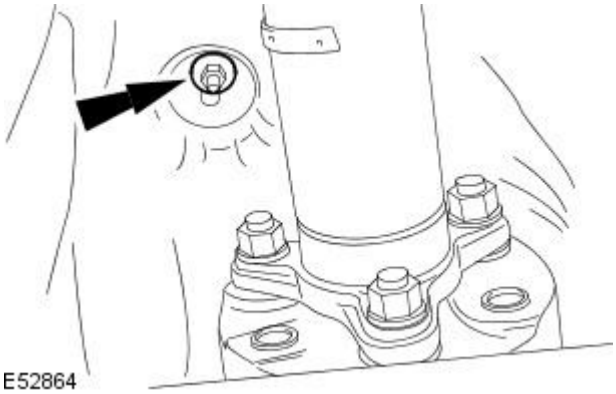


**7.** Tighten the retaining nut.

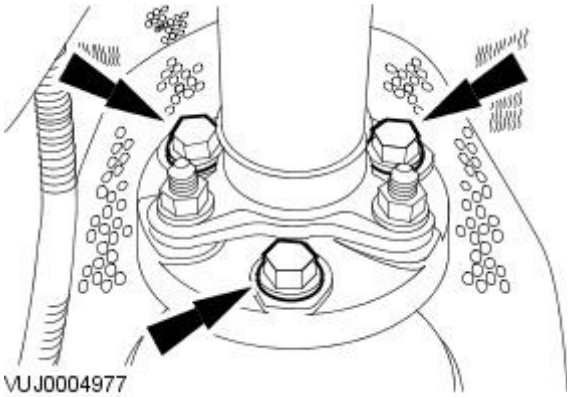


**8.** CAUTIONS:

Make sure the front of the driveshaft does not put an excessive load on the center bearing. Failure to follow this instruction may result in damage to the vehicle.

Make sure all components are installed to the position they were removed from. Failure to follow this instruction may result in damage to the vehicle.

Attach the driveshaft to the transmission flange.

- Tighten to 88 Nm.

**9.** Carry out a transmission fluid level check.
For additional information, refer to: Transmission Fluid Level Check (307-01 Automatic Transmission/Transaxle, General Procedures).

GETtheMANUALS.org

# Automatic Transmission / Transaxle - Transmission Fluid Pan, Gasket and Filter

In-vehicle Repair

## Removal

All vehicles

1. Disconnect the battery ground cable.
   For additional information, refer to: Battery Disconnect (414-01, General Procedures).

Vehicles with diesel engine

2. Remove the air deflector.
   For additional information, refer to: Air Deflector (501-02, Removal and Installation).

All vehicles

3. Drain the transmission.
   For additional information, refer to: Transmission Fluid Drain and Refill (307-01, General Procedures).

Vehicles with diesel engine

4. Detach the catalytic converter temperature sensor wiring harness from the fluid pan.

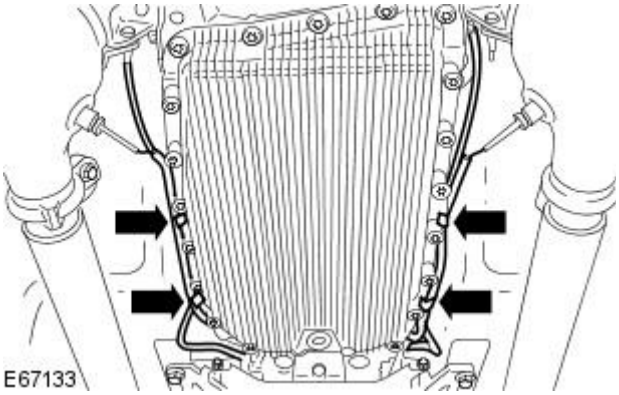


All vehicles

5. NOTE: Discard the fluid pan, gasket and filter.

   Remove the fluid pan, gasket and filter.

   - Remove the retaining bolts.

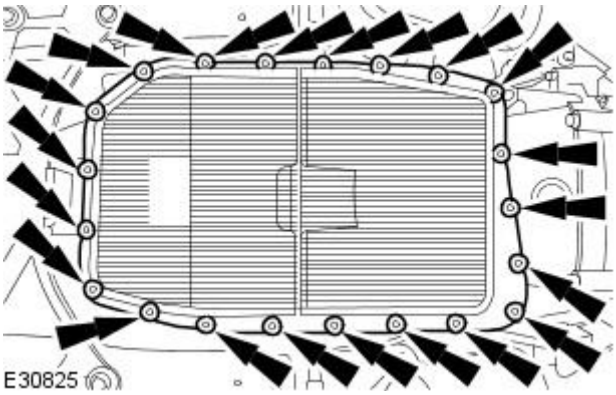


## Installation

All vehicles

1. Install the new fluid pan, gasket and filter.

   - Tighten to 8 Nm.

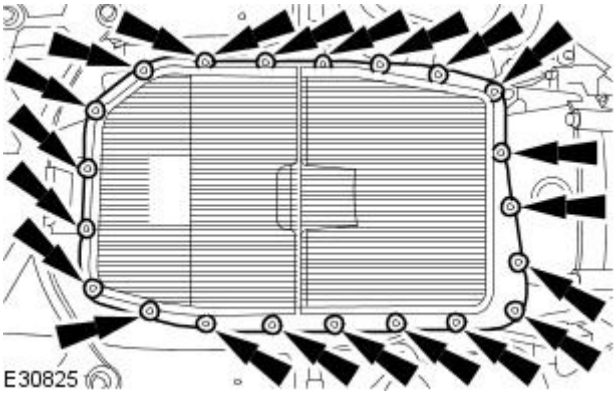


Vehicles with diesel engine

GETtheMANUALS.org

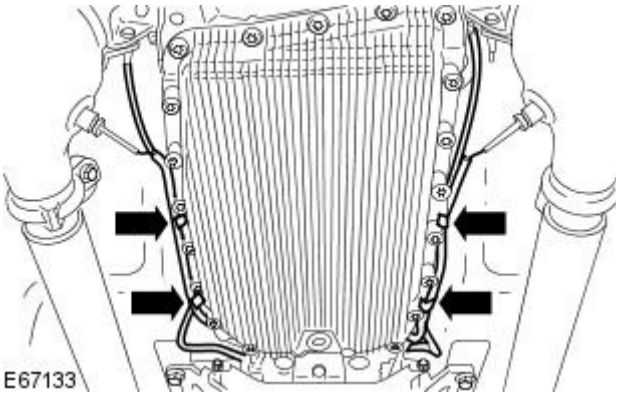


2. Attach the catalytic converter temperature sensor wiring harness onto the fluid pan.

All vehicles

3. Fill the transmission.
   For additional information, refer to: Transmission Fluid Drain and Refill (307-01, General Procedures).

Vehicles with diesel engine

4. Install the air deflector.
   For additional information, refer to: Air Deflector (501-02, Removal and Installation).

All vehicles

5. Lower the vehicle.
6. Connect the battery ground cable.
   For additional information, refer to: Battery Connect (414-01, General Procedures).

GETtheMANUALS.org

# Automatic Transmission / Transaxle - Transmission Control Module (TCM) and Main Control Valve Body

In-vehicle Repair

**General Equipment**

| |
|---|
| Anti-Static Wrist Strap |

## Removal

**1.** Remove the fluid pan, gasket and filter.
For additional information, refer to: Transmission Fluid Pan, Gasket and Filter (307-01 Automatic Transmission/Transaxle, In-vehicle Repair).

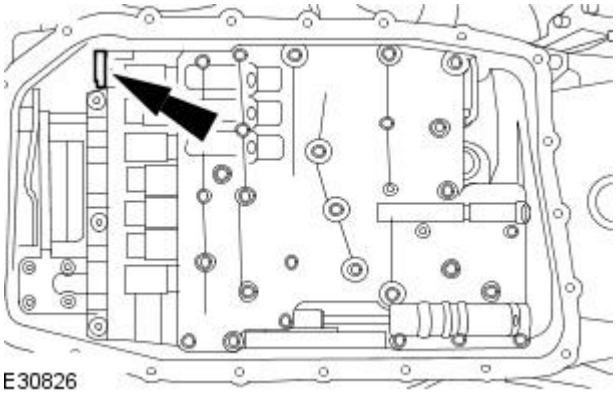


**2.** CAUTION: Make sure the transmission control module (TCM) and main control valve body are protected against electrostatic discharge. Failure to follow this instruction may result in component damage.

Reposition the locking device.

**3.** Disconnect the TCM and main control valve body electrical connector.

1. Reposition the electrical connector retaining ring.
2. Disconnect the electrical connector.

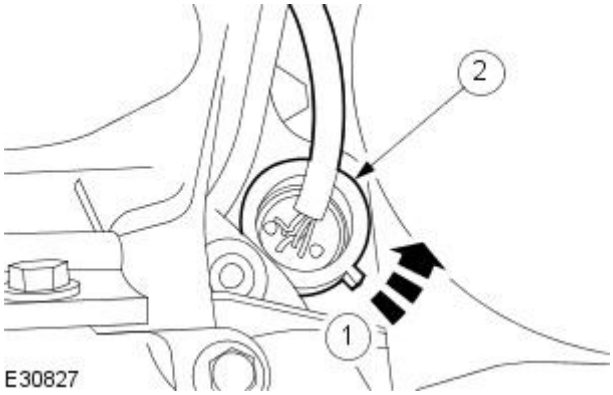


**4.** CAUTION: Make sure all suitable safety precautions are taken to protect the TCM and main control valve body electrical connector pins against electrostatic discharge.

Remove the sealing tube.

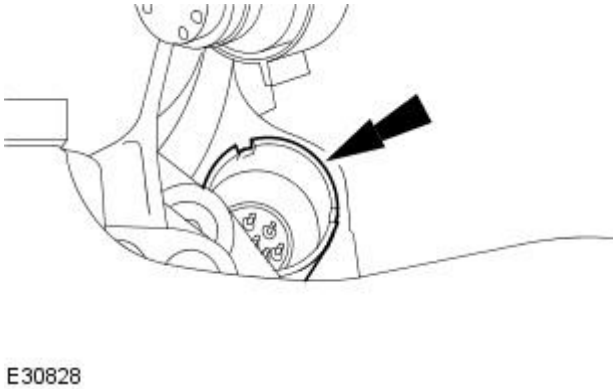


**5.** Remove and discard the seals.

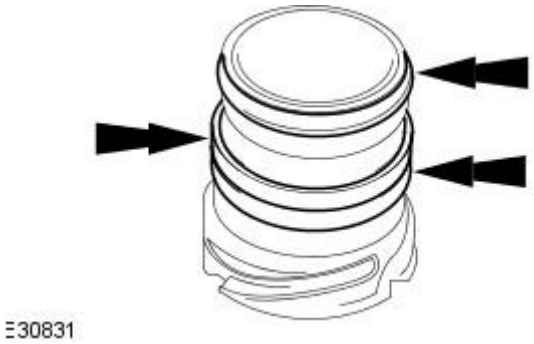


GETtheMANUALS.org

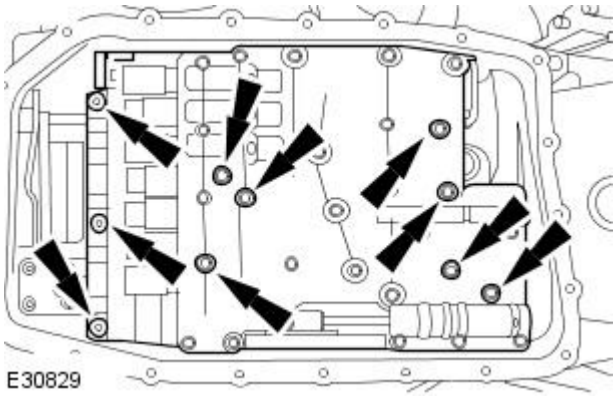


**6.** Remove the TCM and main control valve body.

- Remove the retaining bolts.

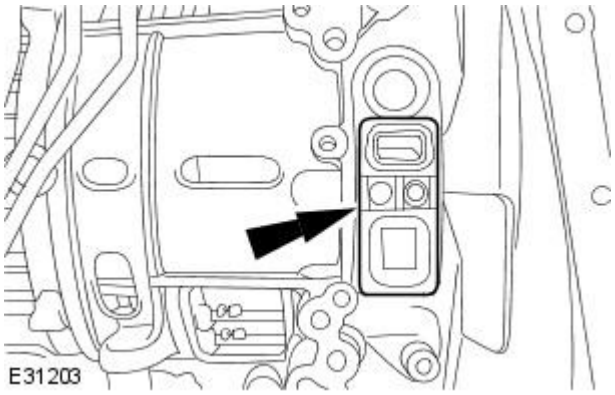


**7.** Remove the TCM and main control valve body sealing block.

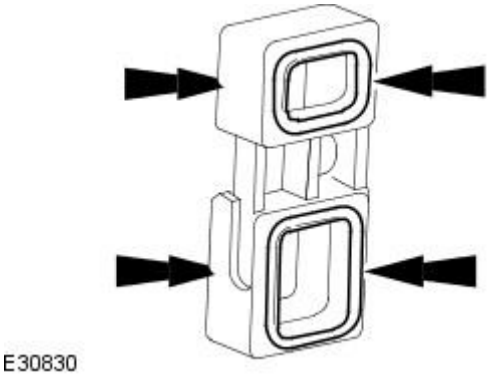


**8.** Remove and discard the seals.

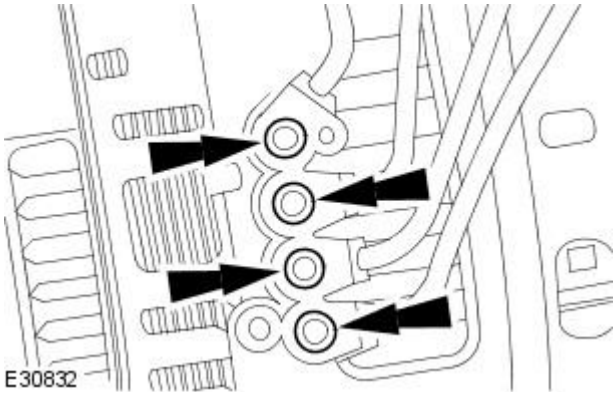


**9.** Remove and discard the seals.

## Installation

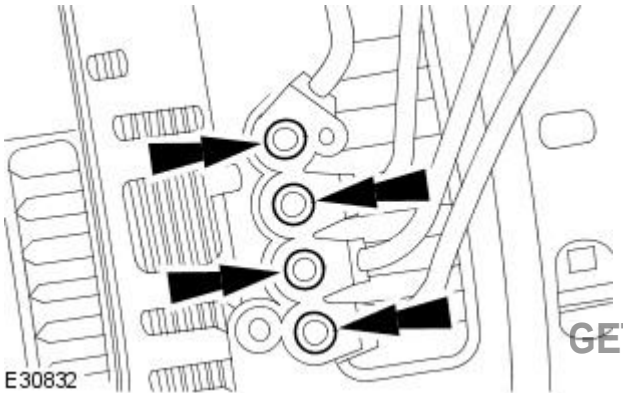


**1.** Install the new seals.

GETtheMANUALS.org

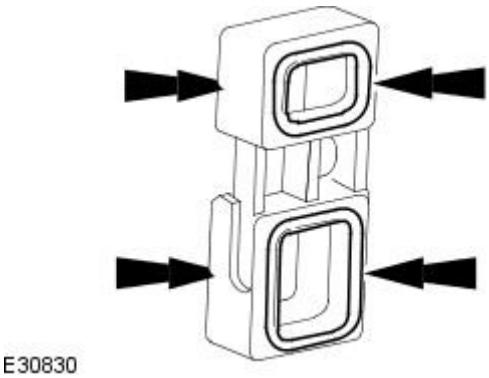


**2.** Install the new seals.

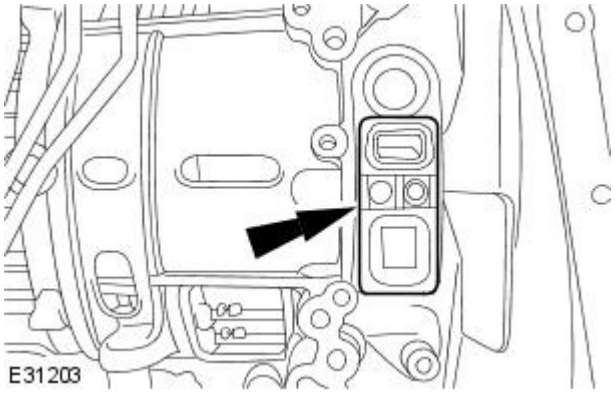


**3.** Install the TCM and main control valve body sealing block.

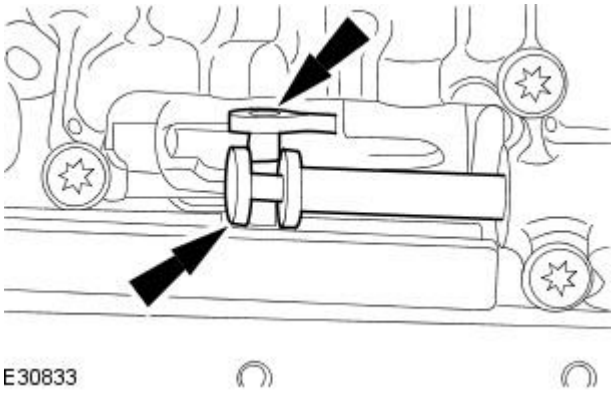


**4.** CAUTION: Make sure the TCM and main control valve body are protected against electrostatic discharge. Failure to follow this instruction may result in component damage.

Align the transmission selector shaft to the TCM and main control valve body.

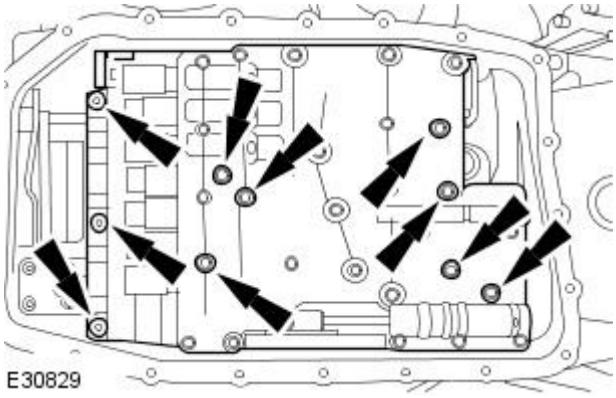


**5.** Install the TCM and main control valve body retaining bolts.

- Tighten to 8 Nm.

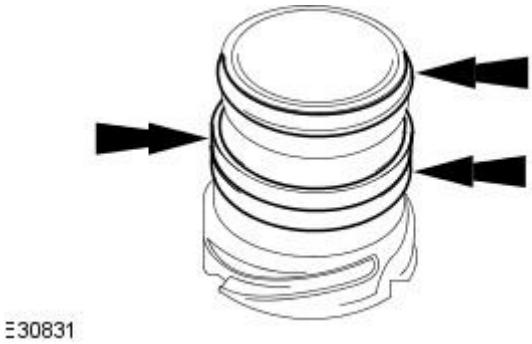


**6.** Install the new seals.

GETtheMANUALS.org

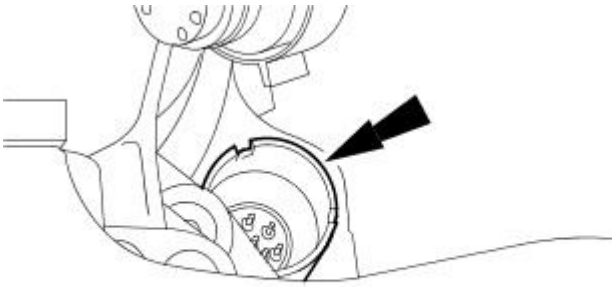

E30828

**7.** CAUTION: Make sure all suitable safety precautions are taken to protect the TCM and main control valve body electrical connector pins against electrostatic discharge.

Install the sealing tube.

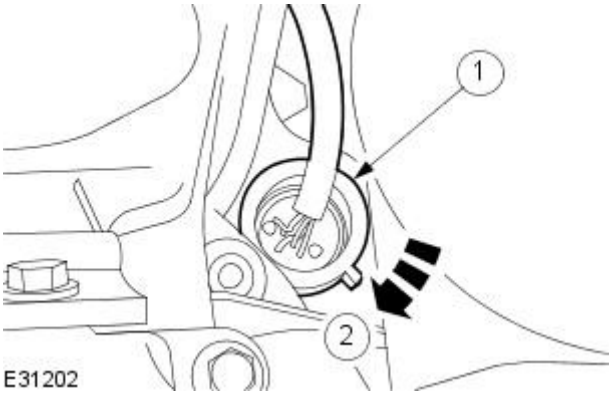


E31202

**8.** Reposition the TCM and main control valve body electrical connector retaining ring.

1. Connect the electrical connector.
2. Reposition the electrical connector retaining ring.

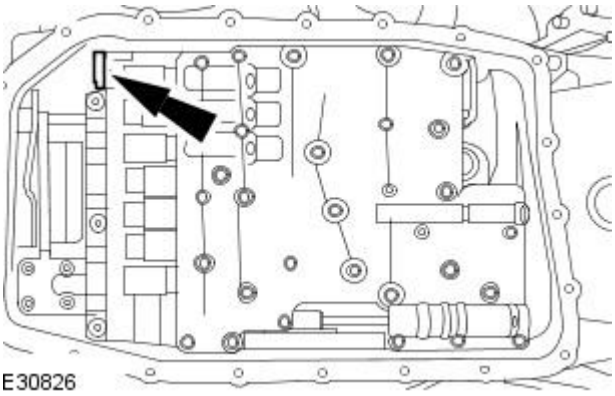

E30826

**9.** Reposition the locking device.

**10.** Install the fluid pan, gasket and filter.
For additional information, refer to: Transmission Fluid Pan, Gasket and Filter (307-01 Automatic Transmission/Transaxle, In-vehicle Repair).

GETtheMANUALS.org

# Automatic Transmission / Transaxle - Transmission2.5L NA V6 - AJV6 / 3.0L NA V6 - AJ27

Removal

| Special Tool(s) | |
|---|---|
| 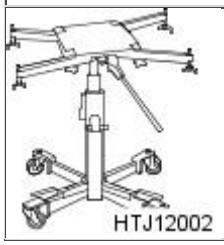 HTJ12002 | Powertrain Assembly Jack<br><br>HTJ1200-2 |

## Removal

1. Place the selector lever in the **N** position.
2. Disconnect the battery ground cable.
   For additional information, refer to: Battery Disconnect and Connect (414-01 Battery, Mounting and Cables, General Procedures).
3. Remove the exhaust system.
   For additional information, refer to: Exhaust System - V8 4.2L Petrol/V8 S/C 4.2L Petrol/2.5L NA V6 - AJV6/3.0L NA V6 - AJ27 (309-00 Exhaust System, Removal and Installation).

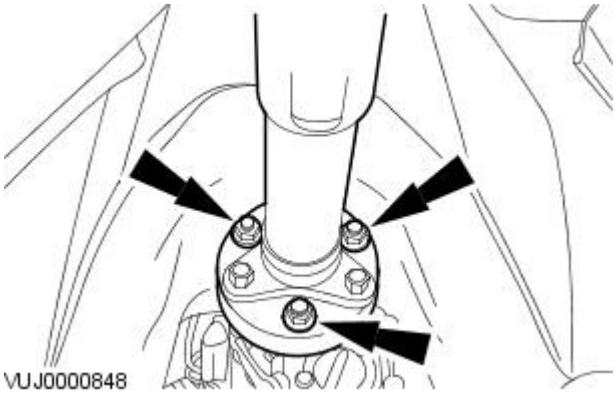
VUJ0000848

4. CAUTIONS:

   Under no circumstances must the flexible coupling (or its fixings) be loosened or removed from the driveshaft.

   Make sure the front of the driveshaft does not put an excessive load on the center bearing. Failure to follow this instruction may result in damage to the vehicle.

   Detach the driveshaft from the transmission flange.

   - Mark the position of the driveshaft in relation to the transmission flange.
   - Mark the position of each nut and bolt in relation to the transmission flexible joint.

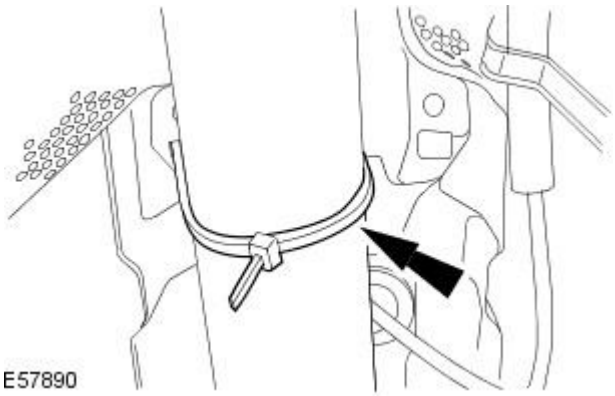
E57890

5. CAUTION: Make sure the front of the driveshaft does not put an excessive load on the center bearing. Failure to follow this instruction may result in damage to the vehicle.

   Using a suitable securing strap, reposition and support the driveshaft to the vehicle body.

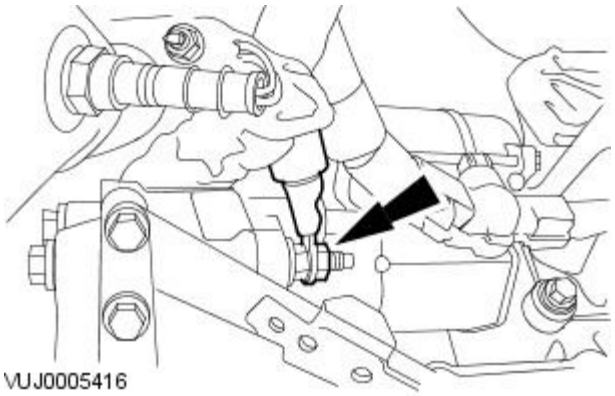
VUJ0005416

6. Detach the engine ground cable.

GETtheMANUALS.org

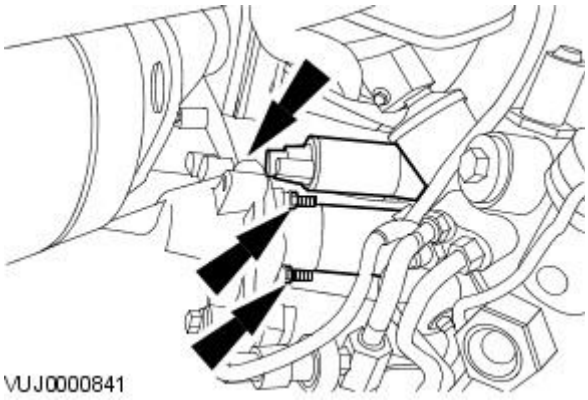


**7.** CAUTION: Make sure the starter motor is supported. Failure to follow this instruction may result in damage to the vehicle.

Detach the starter motor.

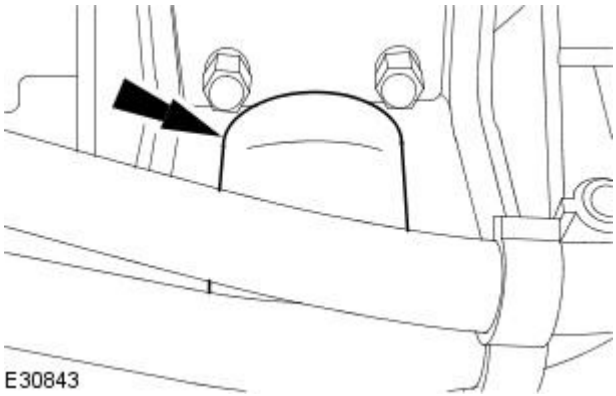


**8.** Remove the rubber access cover.

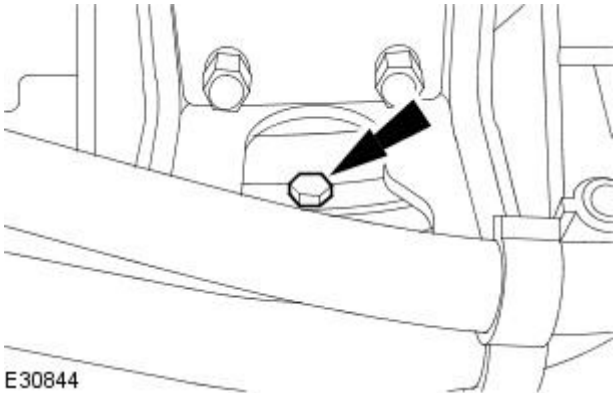


**9.** Remove the torque converter retaining bolts.

- Rotate the torque converter to gain access to the remaining bolts.

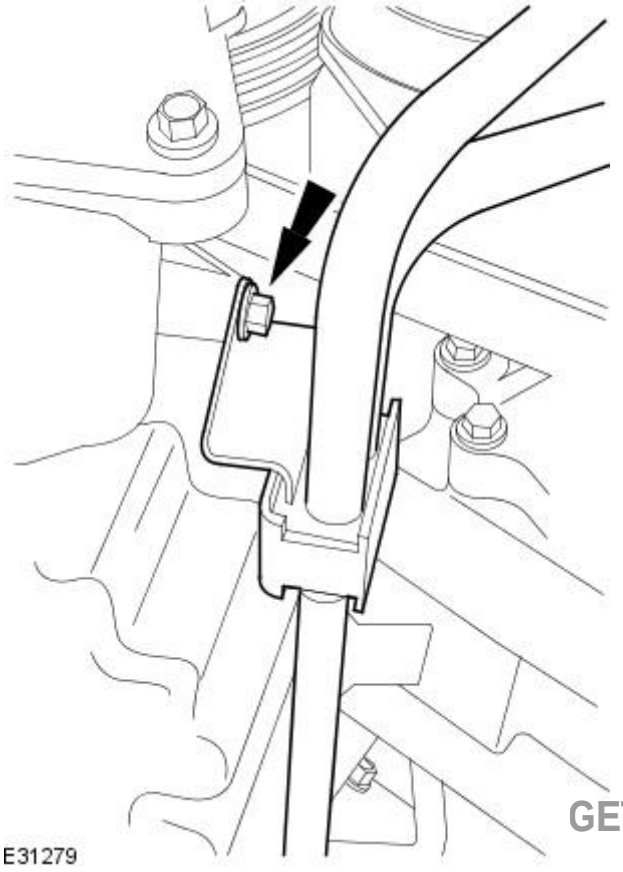


**10.** Detach the transmission fluid cooler tubes from the oil pan.

GETtheMANUALS.org

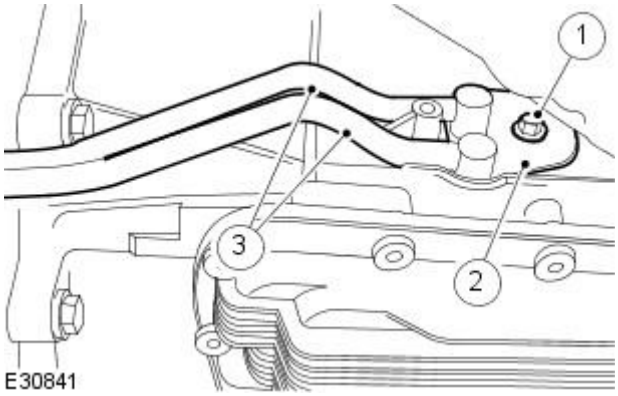


**11.** Detach the transmission fluid cooler tubes.

1. Remove the retaining bolt.
2. Remove the retaining plate.

**11.** CAUTION: Make sure the transmission fluid cooler tubes are not removed from the automatic transmission by using a pry bar. Failure to follow this instruction may result in damage to the vehicle.

3. Detach the transmission fluid cooler tubes.

- Allow the transmission fluid to drain into a suitable container.

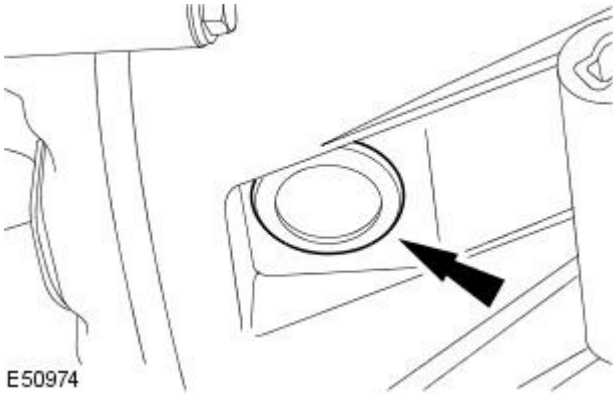


**12.** Remove the torque converter rubber inspection cover.

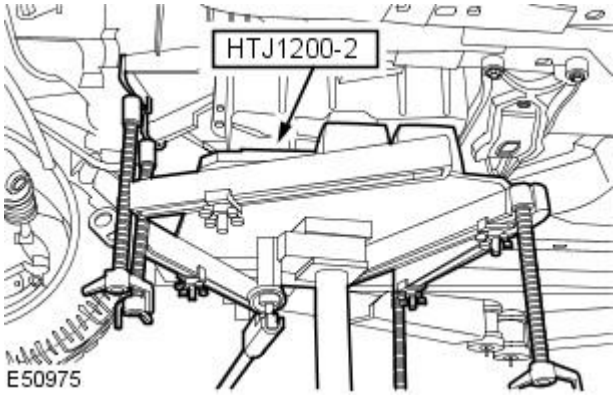


**13.** CAUTION: Make sure the automatic transmission weight is evenly supported on the special tool. Failure to follow this instruction may result in damage to the vehicle.

Install the special tool.

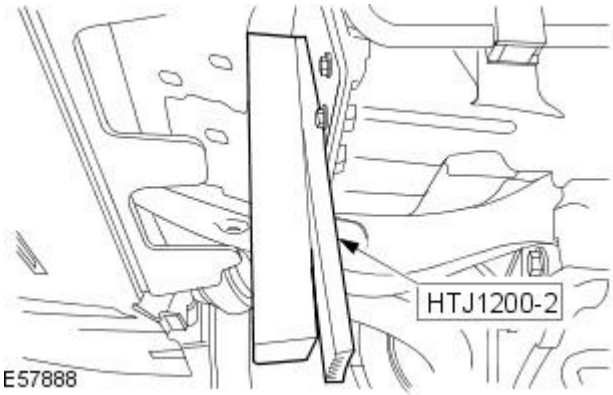


**14.** Install the rubber blocks supplied with special tool HTJ1200-2, between the front subframe and the oil pan.

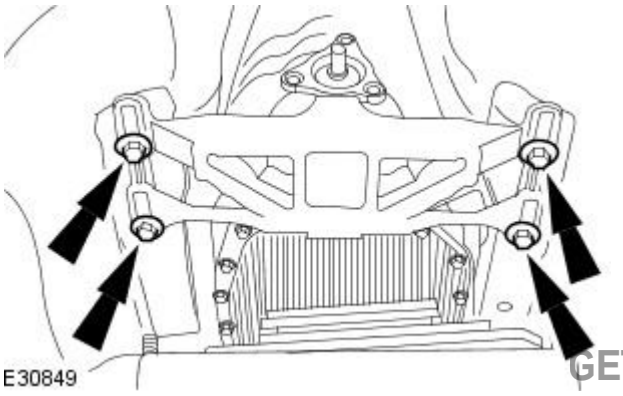


**15.** Lower the rear of the transmission.

- Remove the automatic transmission support retaining bolts.

GETtheMANUALS.org

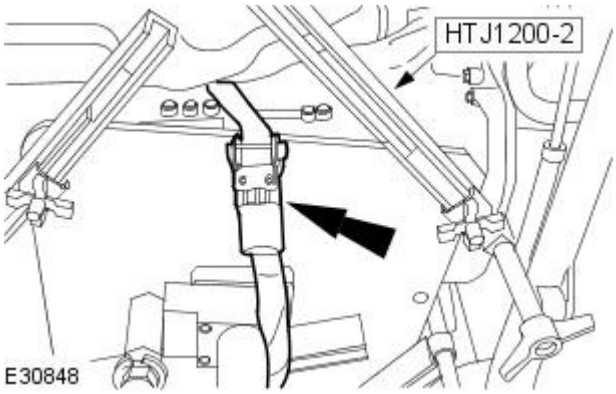


**16.** WARNING: Secure the automatic transmission to the special tool using the tie down straps. Failure to follow this instruction may result in personal injury.

Install the tie down strap.

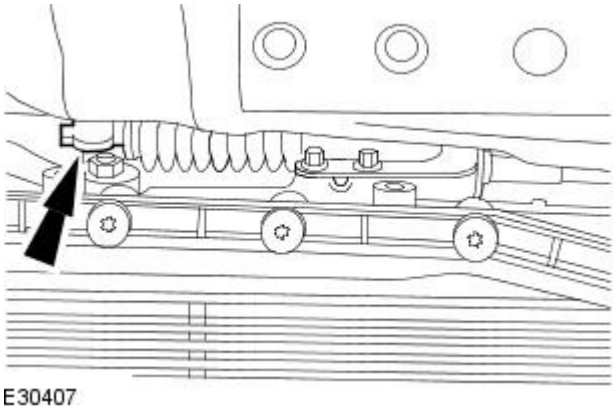


**17.** Detach the selector lever cable.

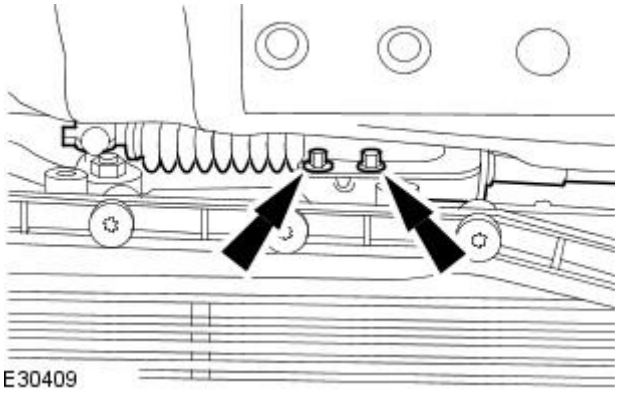


**18.** Reposition the selector lever cable.

- Remove the retaining bolts.

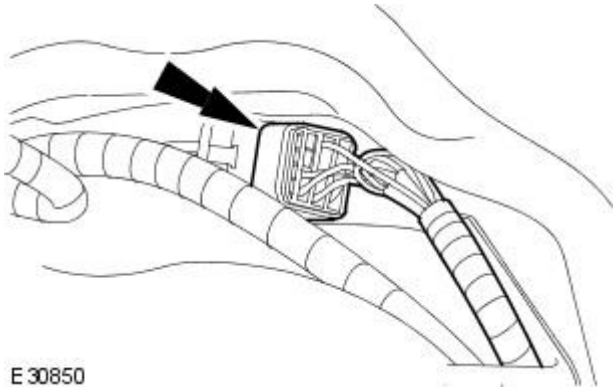


**19.** CAUTION: Make sure the transmission control module (TCM) and main control valve body is protected against electrostatic discharge. Failure to follow this instruction may result in component damage.

Disconnect the automatic transmission electrical connector.

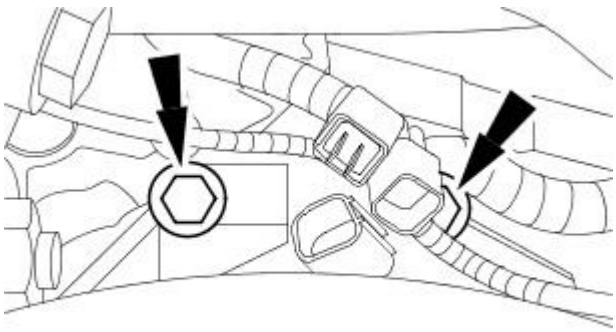


**20.** Remove the automatic transmission retaining bolts.

GETtheMANUALS.org

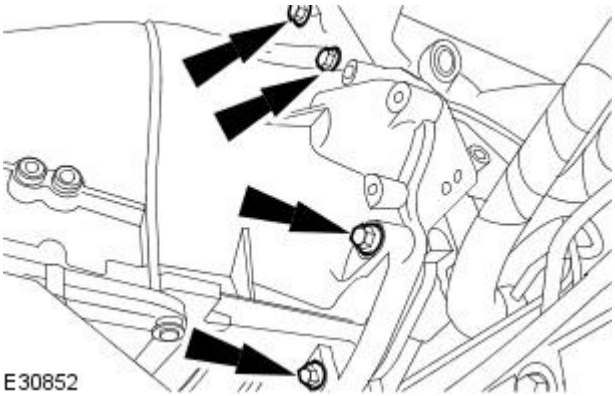


**21.** Remove the automatic transmission retaining bolts.

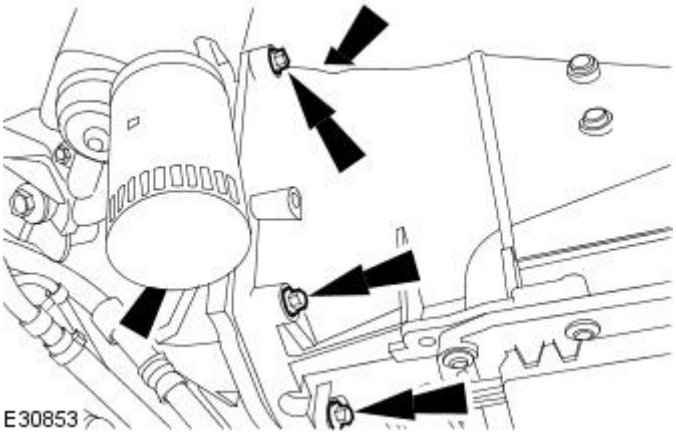


**22.** WARNING: Do not let the torque converter drop out of the automatic transmission. Failure to follow this instruction may result in personal injury.

• NOTE: Special tool shown removed for clarity.

Remove the automatic transmission from the vehicle.

- Remove the retaining bolts.
- Lower the automatic transmission from the vehicle.

GETtheMANUALS.org

# Automatic Transmission / Transaxle - Transmission2.7L V6 - TdV6

Removal

| Special Tool(s) | |
|---|---|
| E52720 | Engine Lifting Brackets<br><br>303-1129 |
| 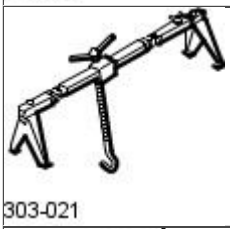 303-021 | Engine Support Bracket<br><br>303-021 |
| 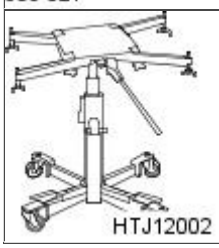 HTJ12002 | Powertrain Assembly Jack<br><br>HTJ1200-2 |

## Removal

1. Move the transmission selector lever to the “N” position.
2. Disconnect the battery ground cable.
   For additional information, refer to: Battery Disconnect (414-01, General Procedures).
3. Remove the filler cap.

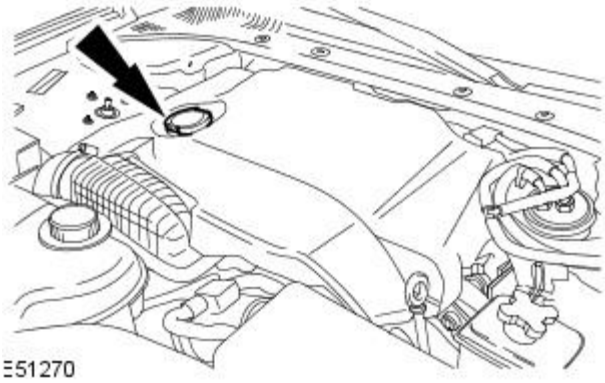


4. Remove the engine cover.

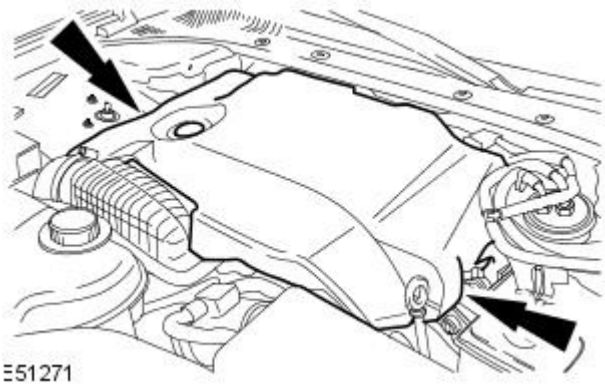


GETtheMANUALS.org

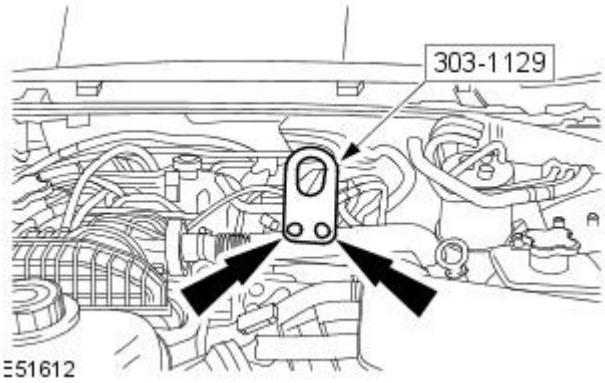


**5.** Install the special tool.

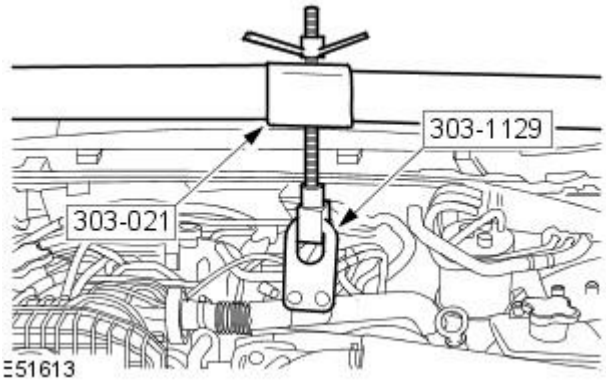


**6.** Install the special tool.

- Rotate the special tool adjustment bolt a suitable amount of turns to support the engine.

**7.** Remove both catalytic converters.
For additional information, refer to: Catalytic Converter - 2.7L Diesel (309-00, Removal and Installation).

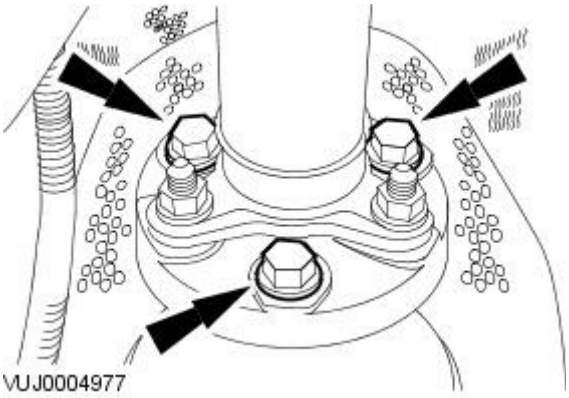


**8.** CAUTIONS:

Under no circumstances must the flexible coupling (or its fixings) be loosened or removed from the driveshaft. Failure to follow this instruction may result in damage to the vehicle.

Make sure the front of the driveshaft does not put an excessive load on the center bearing. Failure to follow this instruction may result in damage to the vehicle.

Detach the driveshaft from the transmission flange.

- Mark the position of the driveshaft in relation to the transmission flange.
- Mark the position of each nut and bolt in relation to the transmission flexible joint.

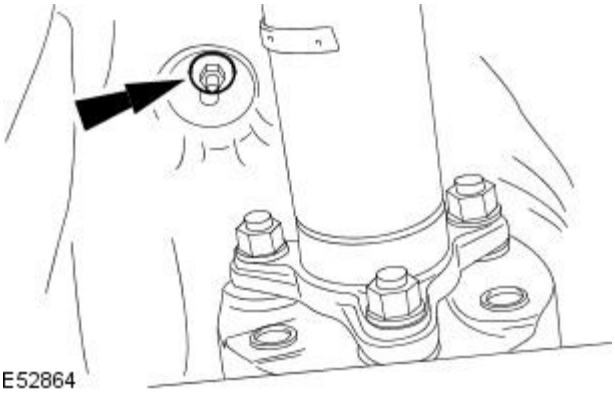


**9.** Loosen the retaining nut.

GETtheMANUALS.org

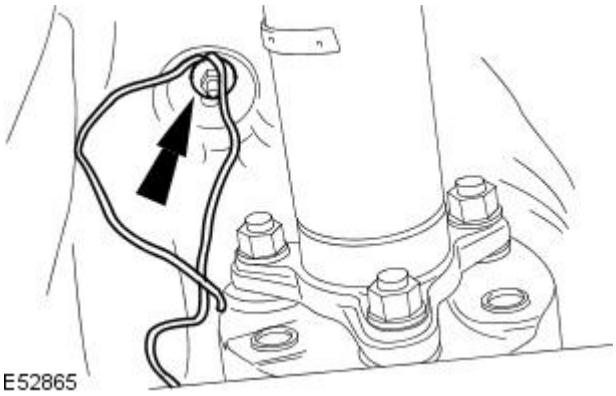


**10.** Install suitable cord to the heat shield retaining nut stud.

- Tighten the retaining nut.

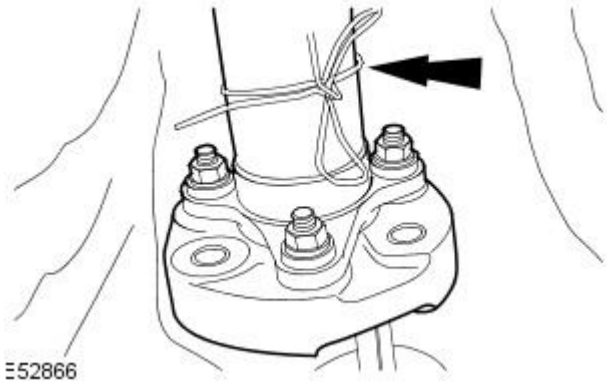


**11.** CAUTION: Make sure the front of the driveshaft does not put an excessive load on the center bearing. Failure to follow this instruction may result in damage to the vehicle.

Reposition and support the driveshaft.

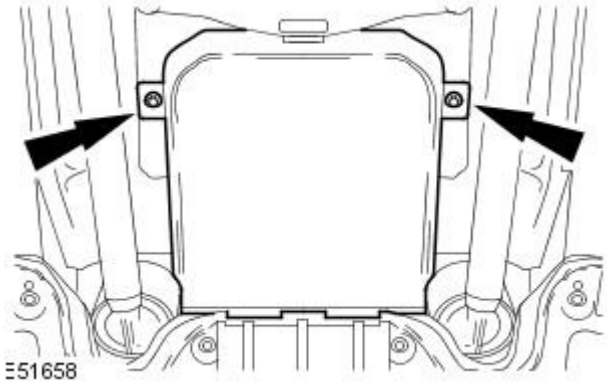


**12.** Remove the transmission undertray.

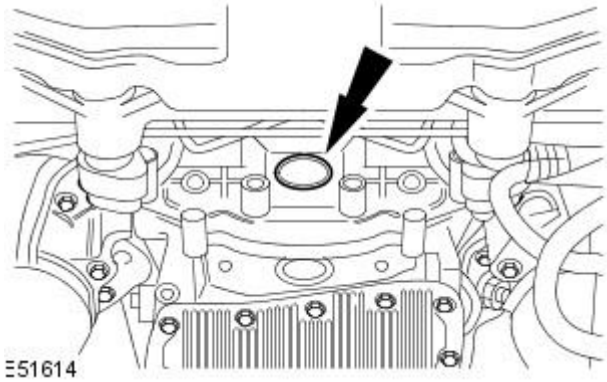


**13.** Remove the rubber access cover.

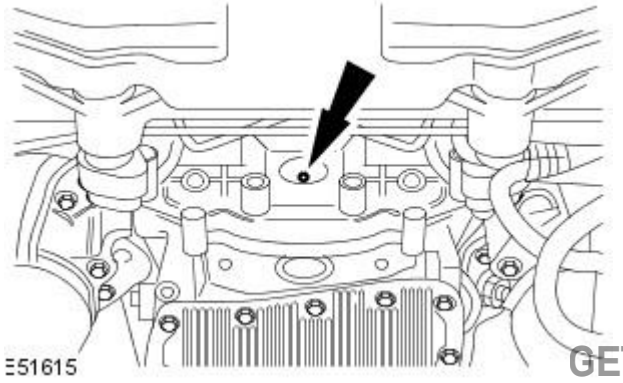


**14.** Remove the retaining bolts.

- Rotate the torque converter to gain access to the remaining bolts.

GETtheMANUALS.org

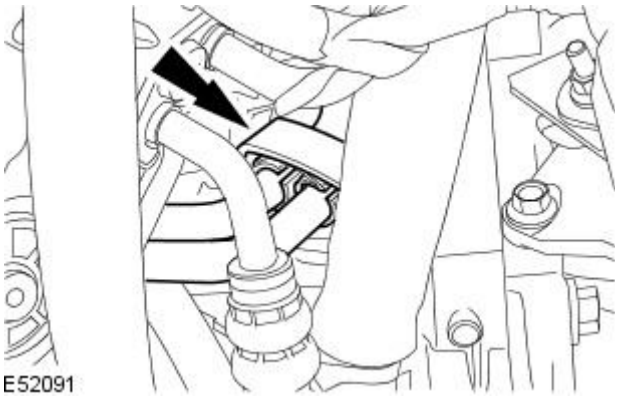
E52091

**15.** Release the transmission fluid cooler tube bracket.

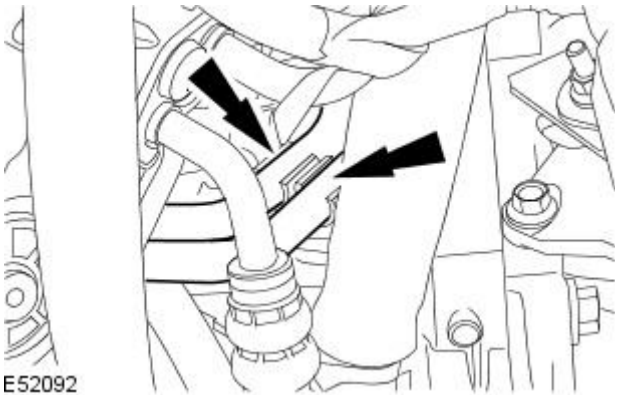
E52092

**16.** Detach the transmission fluid cooler tubes from the retaining bracket.

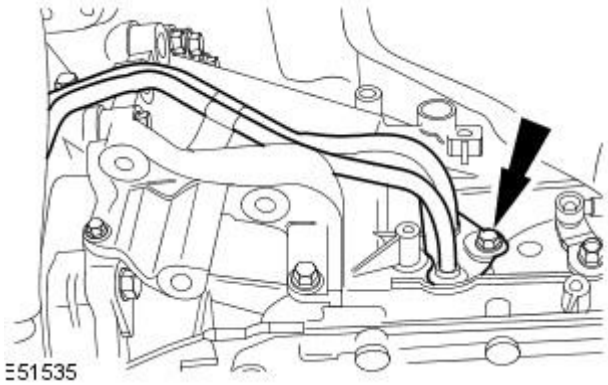
E51535

**17.** CAUTION: Make sure the transmission fluid cooler tubes are not removed from the automatic transmission by using a pry bar. Failure to follow this instruction may result in damage to the vehicle.

Detach the transmission fluid cooler tubes from the automatic transmission.

- Allow the transmission fluid to drain into a suitable container.
- Remove and discard the O-ring seals.

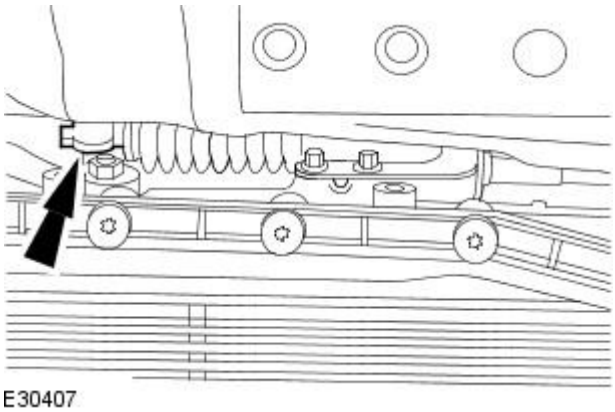
E30407

**18.** Detach the selector lever cable.

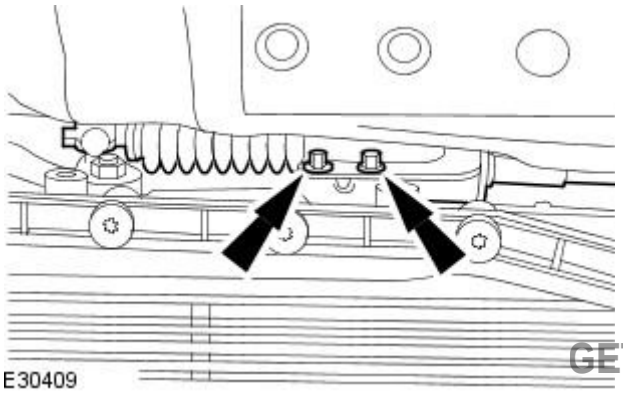
E30409

**19.** Reposition the selector lever cable.

- Remove the retaining bolts.

GETtheMANUALS.org

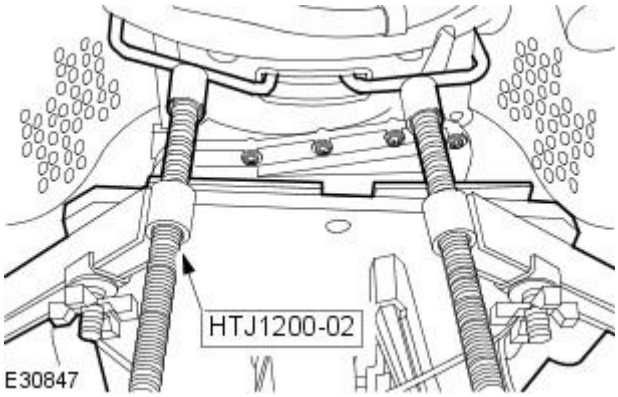


**20.** CAUTION: Make sure the transmission weight is evenly supported on the special tool. Failure to follow this instruction may result in damage to the vehicle.

Install the special tool.

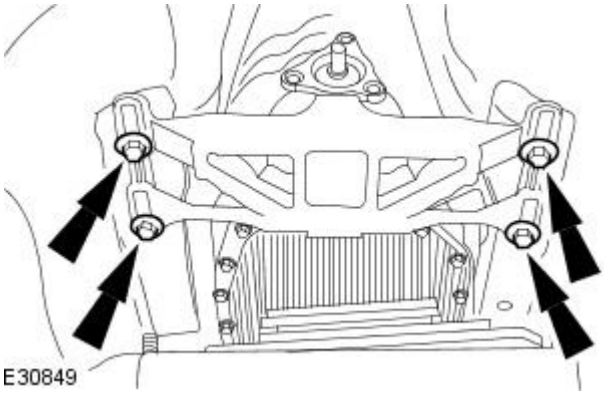


**21.** Using the special tool, lower the rear of the transmission.

- Remove the retaining bolts.

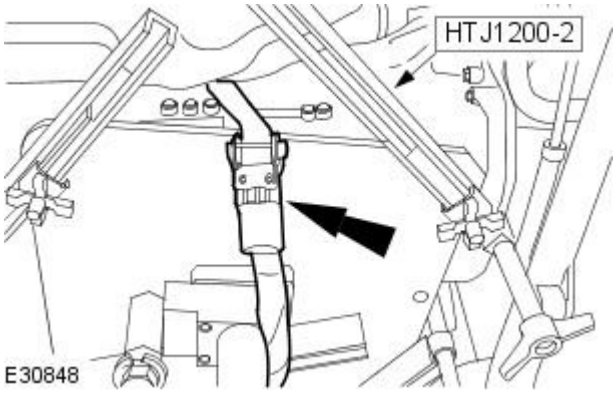


**22.** WARNING: Secure the transmission to the special tool using the tie down straps. Failure to follow this instruction may result in personal injury.

CAUTION: Make sure the tie down strap does not trap the transmissions sensors or harness etc. Failure to follow this instruction may result in damage to the vehicle.

Install the tie down strap.

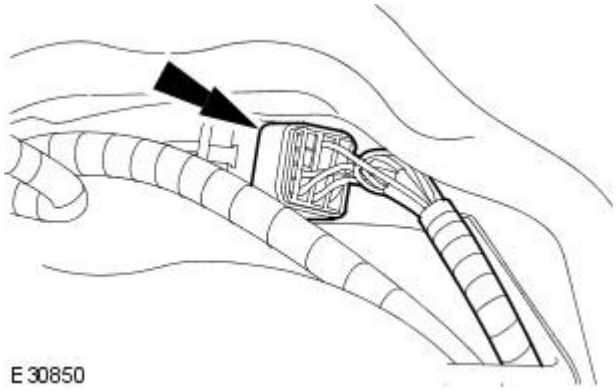


**23.** CAUTION: Make sure the transmission control module (TCM) and main control valve body is protected against electrostatic discharge. Failure to follow this instruction may result in component damage.

Disconnect the automatic transmission electrical connector.

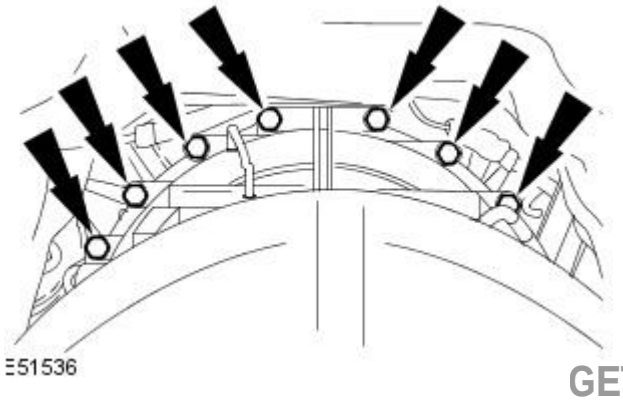


**24.** Remove the retaining bolts.

GETtheMANUALS.org

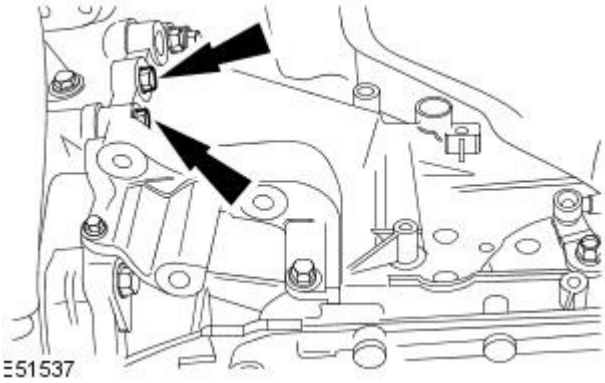


**25.** Remove the retaining bolts.

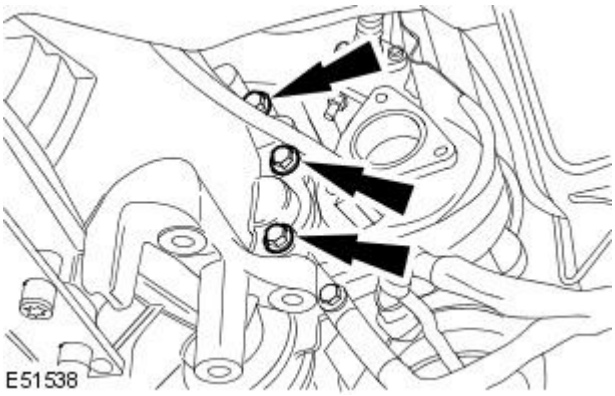


**26.** Remove the retaining bolts.

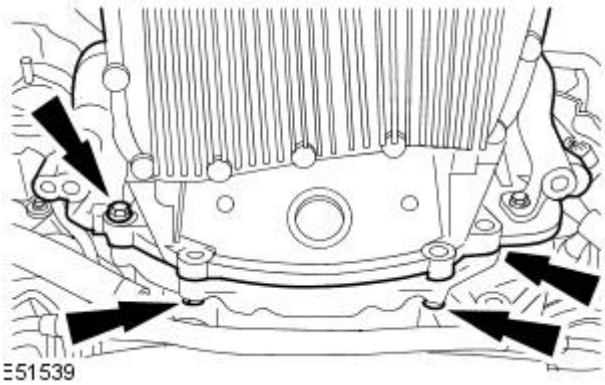


**27.** WARNING: Do not allow the torque converter to become disengaged from the automatic transmission. Failure to follow this instruction may result in personal injury.

• NOTE: Shown with the powertrain assembly jack removed for clarity.

Remove the automatic transmission from the vehicle.

- Remove the retaining bolts.
- Lower the automatic transmission from the vehicle.

GETtheMANUALS.org

# Automatic Transmission / Transaxle - TransmissionV8 4.2L Petrol / V8 S/C 4.2L Petrol

Removal

| Special Tool(s) | |
|---|---|
| 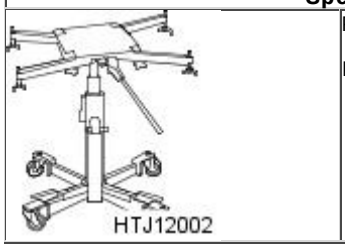 HTJ12002 | Powertrain Assembly Jack<br><br>HTJ1200-2 |

## Removal

1. Place the selector lever in the **N** position.
2. Disconnect the battery ground cable.
   For additional information, refer to: Battery Disconnect and Connect (414-01 Battery, Mounting and Cables, General Procedures).
3. Remove the exhaust system.
   For additional information, refer to: Exhaust System - V8 4.2L Petrol/V8 S/C 4.2L Petrol/2.5L NA V6 - AJV6/3.0L NA V6 - AJ27 (309-00 Exhaust System, Removal and Installation).
4. CAUTIONS:

   Under no circumstances must the flexible coupling (or its fixings) be loosened or removed from the driveshaft.

   Make sure the front of the driveshaft does not put an excessive load on the center bearing. Failure to follow this instruction may result in damage to the vehicle.

   Detach the driveshaft from the transmission flange.

   - Mark the position of the driveshaft in relation to the transmission flange.
   - Mark the position of each nut and bolt in relation to the transmission flexible joint.

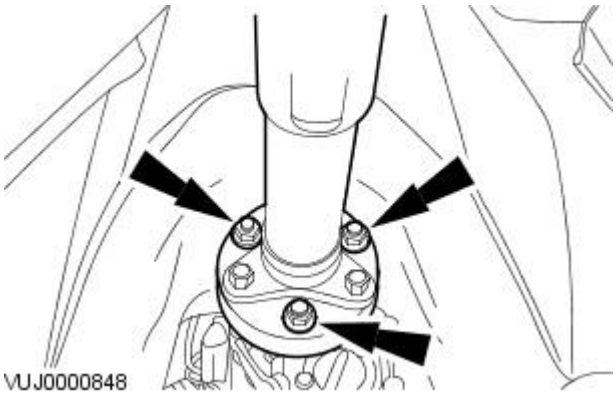
VUJ0000848

5. CAUTION: Make sure the front of the driveshaft does not put an excessive load on the center bearing. Failure to follow this instruction may result in damage to the vehicle.

   Using a suitable securing strap, reposition and support the driveshaft to the vehicle body.

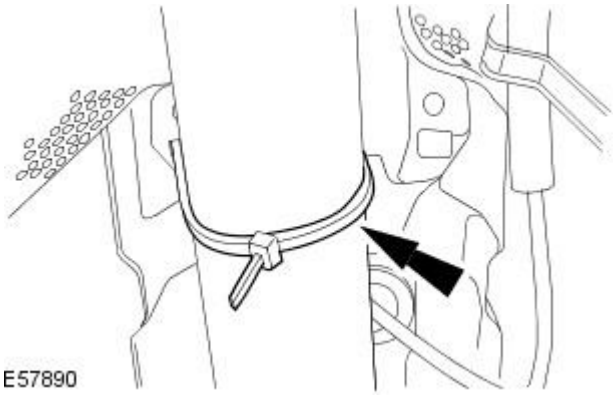
E57890

6. Detach the transmission fluid cooler tubes from the oil pan.

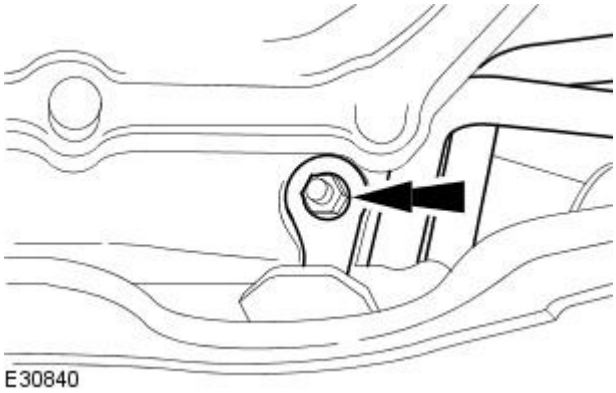
E30840

GETtheMANUALS.org

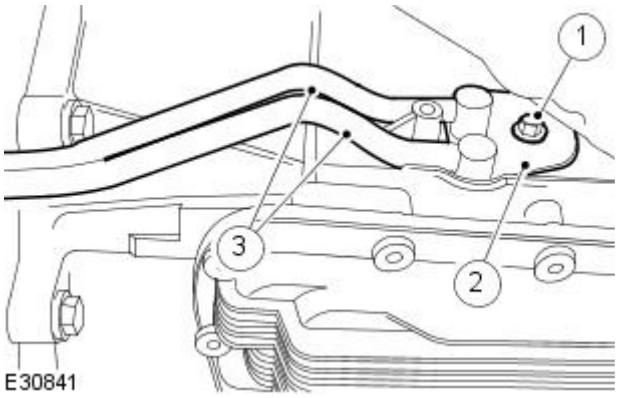


**7.** Detach the transmission fluid cooler tubes.

1. Remove the retaining bolt.
2. Remove the retaining plate.

**7.** CAUTION: Make sure the transmission fluid cooler tubes are not removed from the automatic transmission by using a pry bar. Failure to follow this instruction may result in damage to the vehicle.

3. Detach the transmission fluid cooler tubes.

- Allow the transmission fluid to drain into a suitable container.

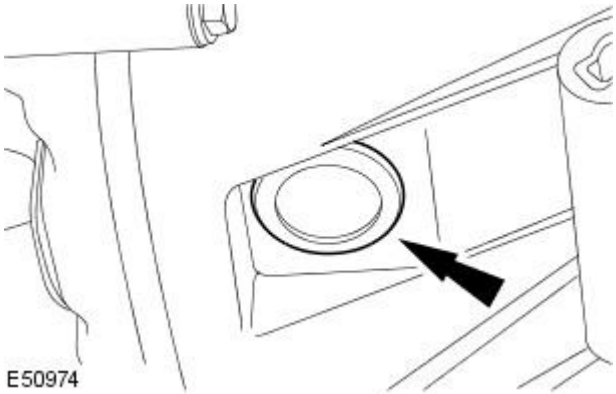


**8.** Remove the torque converter rubber inspection cover.

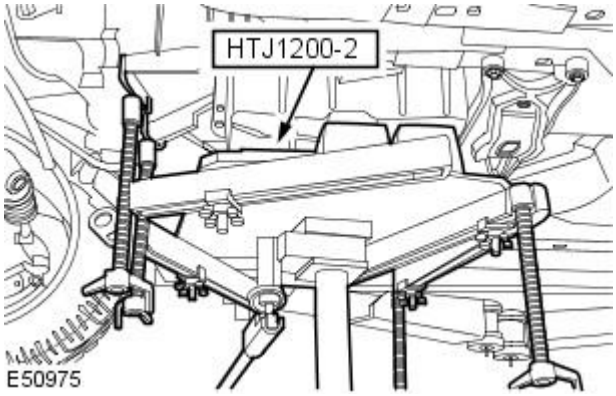


**9.** CAUTION: Make sure the automatic transmission weight is evenly supported on the special tool. Failure to follow this instruction may result in damage to the vehicle.

Install the special tool.

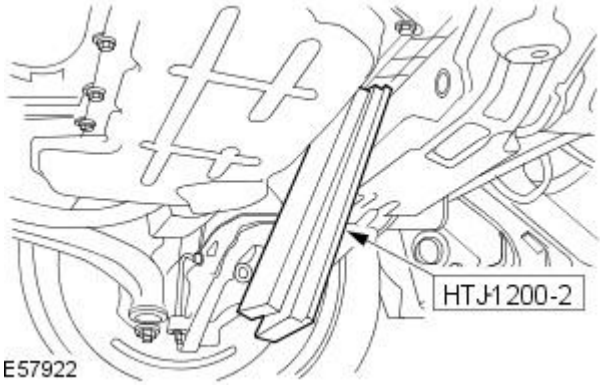


**10.** Install the rubber blocks supplied with special tool HTJ1200-2, between the front subframe and the oil pan.

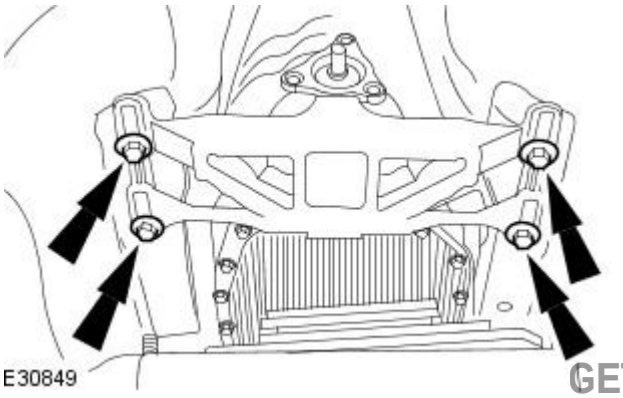


**11.** Lower the rear of the transmission.

- Remove the automatic transmission support retaining bolts.

GETtheMANUALS.org

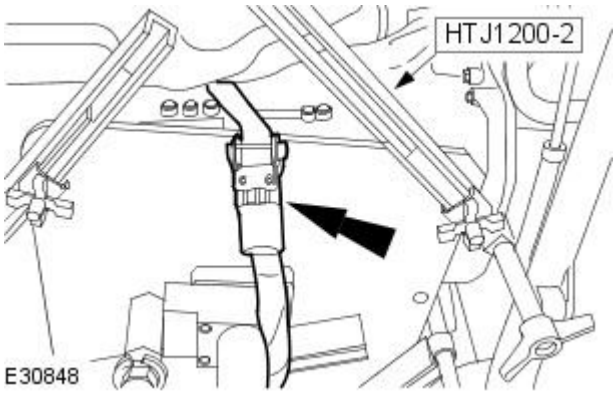


**12.** WARNING: Secure the automatic transmission to the special tool using the tie down straps. Failure to follow this instruction may result in personal injury.

Install the tie down strap.

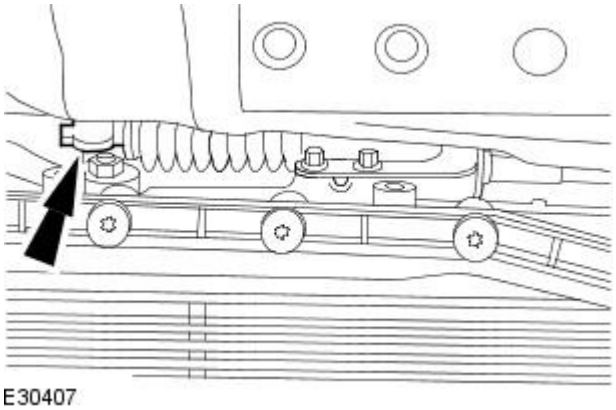


**13.** Detach the selector lever cable.

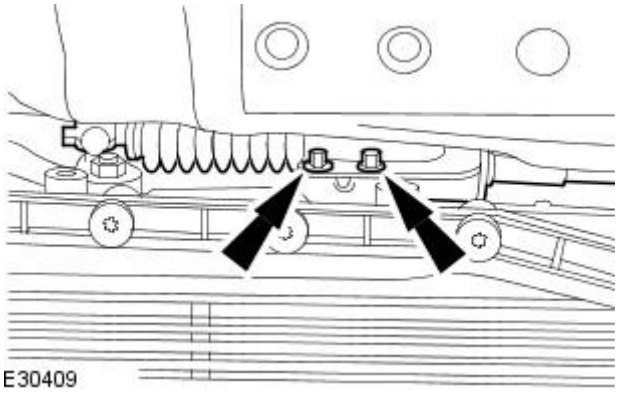


**14.** Reposition the selector lever cable.

- Remove the retaining bolts.

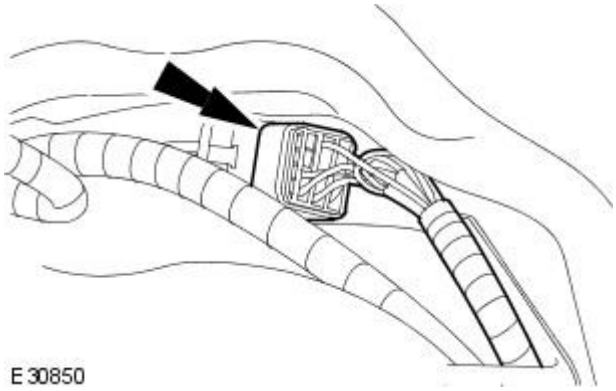


**15.** CAUTION: Make sure the transmission control module (TCM) and main control valve body is protected against electrostatic discharge. Failure to follow this instruction may result in component damage.

Disconnect the automatic transmission electrical connector.

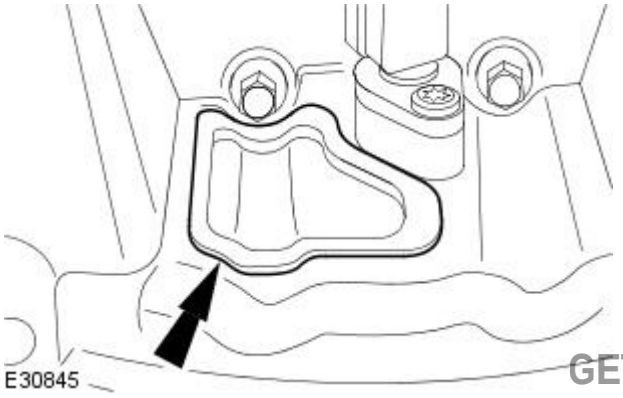


**16.** Remove the rubber access cover.

GETtheMANUALS.org

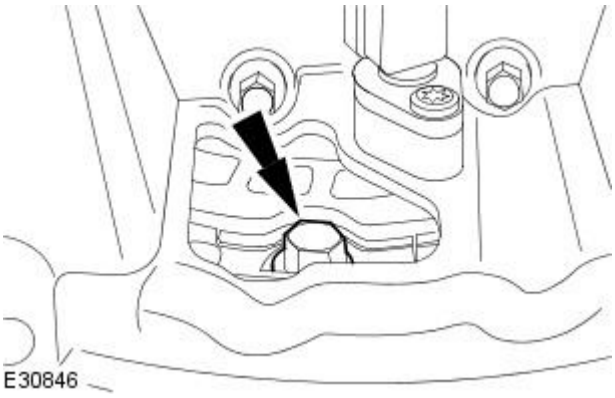


**17.** Remove the torque converter retaining bolts.

- Rotate the torque converter to gain access to the remaining bolts.

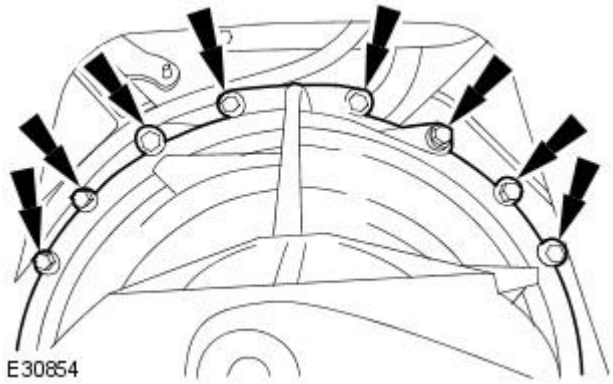


**18.** Remove the automatic transmission retaining bolts.

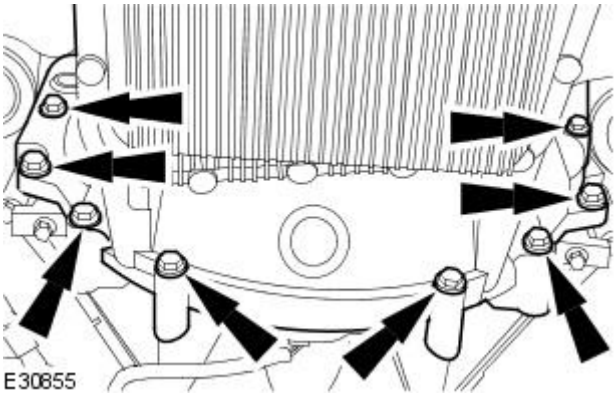


**19.** WARNING: Do not let the torque converter drop out of the automatic transmission. Failure to follow this instruction may result in personal injury.

• NOTE: Special tool shown removed for clarity.

Remove the automatic transmission from the vehicle.

- Remove the retaining bolts.
- Lower the automatic transmission from the vehicle.

GETtheMANUALS.org

# Automatic Transmission / Transaxle - Input Shaft Seal

Disassembly and Assembly of Subassemblies

| Special Tool(s) | |
|---|---|
| 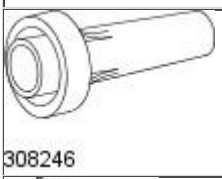 308246 | Front Seal Installer<br><br>308-246 |
| 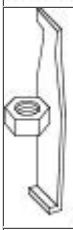 308-375 | Seal Remover Input and Output<br><br>308-375 |
| 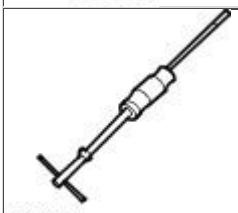 100012 | Slide Hammer<br><br>100-012 |
| 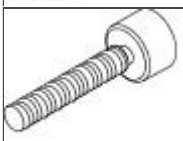 100-012-01 | Slide Hammer Adaptor<br><br>100-012-01 |
| 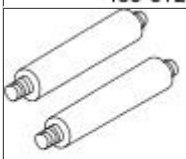 307-139 | Torque Converter Handles<br><br>307-139 |

**1.** Remove the transmission assembly.
For additional information, refer to: Transmission - 2.5L NA V6 - AJV6/3.0L NA V6 - AJ27 (307-01 Automatic Transmission/Transaxle, Removal) /
Transmission - V8 4.2L Petrol/V8 S/C 4.2L Petrol (307-01 Automatic Transmission/Transaxle, Removal) /
Transmission - 2.7L Diesel (307-01, Removal).

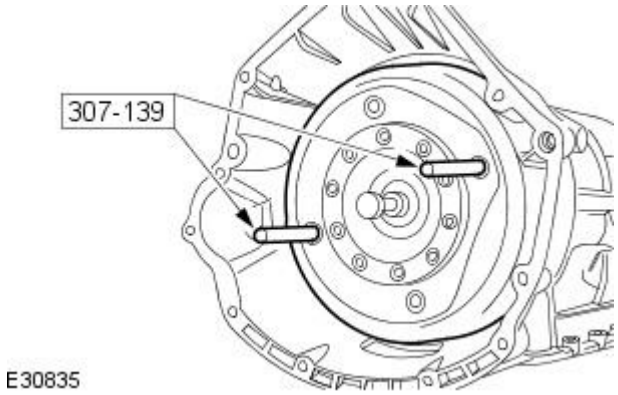


**2.** WARNING: Do not let the torque converter drop out of the transmission. Failure to follow this instruction may result in personal injury.

Using the special tools, remove the torque converter.

- Drain any remaining fluid into a suitable container.

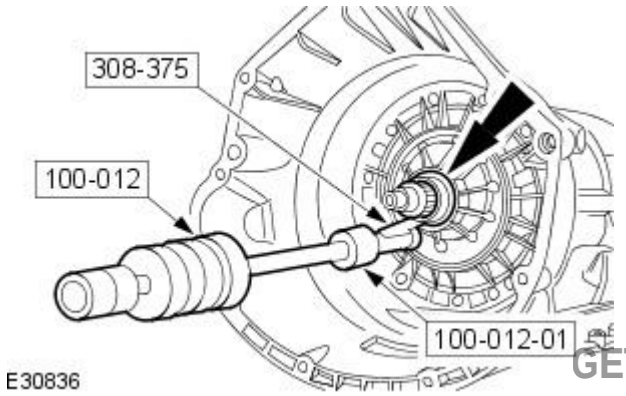


**3.** CAUTION: Make sure the transmission housing seal face is not damaged when removing the torque converter seal. Failure to follow this instruction may result in damage to the vehicle.

Using the special tools, remove the input shaft seal.

GETtheMANUALS.org

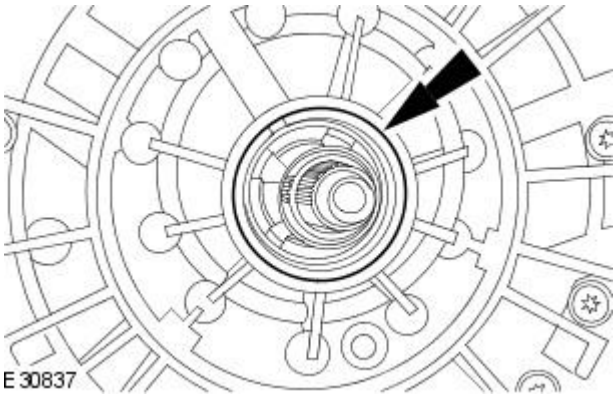


**4.** NOTE: Using a suitable metal surface cleaner meeting Jaguar specification. clean the seal face on the housing before fitting the new seal.

Clean and inspect the transmission housing seal face.

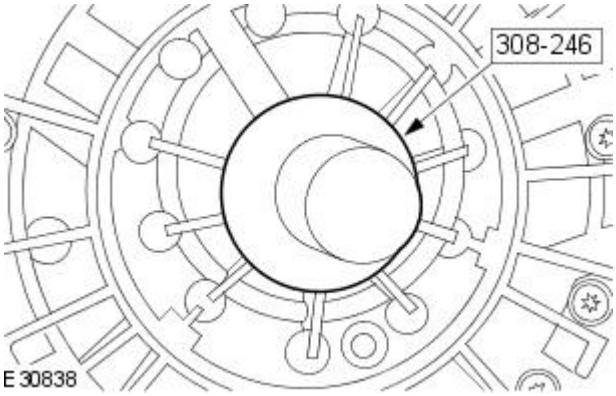


**5.** Using the special tool, install a new input shaft seal.

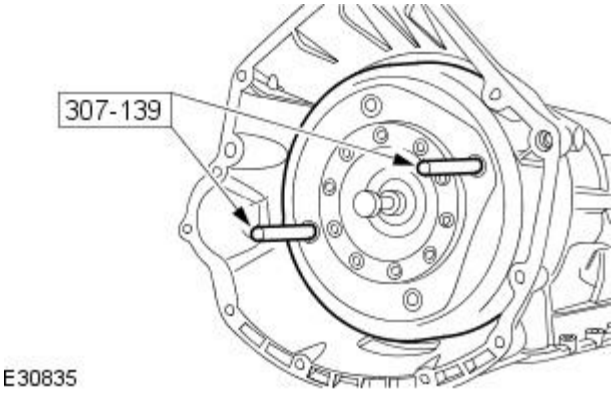


**6.** WARNING: Do not let the torque converter drop out of the transmission. Failure to follow this instruction may result in personal injury.

• NOTE: The torque converter hub must engage fully in the oil pump drive gear.

Using the special tools, install the torque converter.

**7.** Install the transmission assembly.
For additional information, refer to: Transmission - 2.5L NA V6 - AJV6/3.0L NA V6 - AJ27 (307-01 Automatic Transmission/Transaxle, Installation) /
Transmission - V8 4.2L Petrol/V8 S/C 4.2L Petrol (307-01 Automatic Transmission/Transaxle, Installation) /
Transmission - 2.7L Diesel (307-01, Installation).

GETtheMANUALS.org

# Automatic Transmission / Transaxle - Transmission2.5L NA V6 - AJV6 / 3.0L NA V6 - AJ27

Installation

| Special Tool(s) | |
|---|---|
| HTJ12002 | Powertrain Assembly Jack<br><br>HTJ1200-2 |

## Installation

**1.** CAUTION: If the automatic transmission fluid is very dirty or it contains metallic particles, then along with a new transmission, install a new automatic transmission fluid cooler and lines.

Flush the transmission oil cooler and fluid tubes.

**2.** NOTE: Use high-temperature grease meeting Jaguar specification.

Apply a thin layer of high-temperature grease to the centering spigot bore on the torque converter.

**3.** WARNING: Do not let the torque converter drop out of the automatic transmission. Failure to follow this instruction may result in personal injury.

CAUTION: The torque converter hub must engage fully in the oil pump drive gear throughout the whole installation procedure.

Install the automatic transmission to the vehicle.

- Raise the automatic transmission to the vehicle.
- Install the retaining bolts.
- Tighten to 48 Nm.

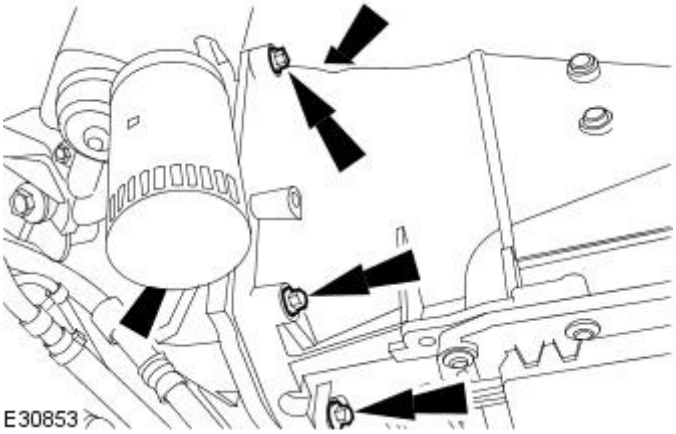

E30853

**4.** Install the automatic transmission retaining bolts.

- Tighten to 48 Nm.

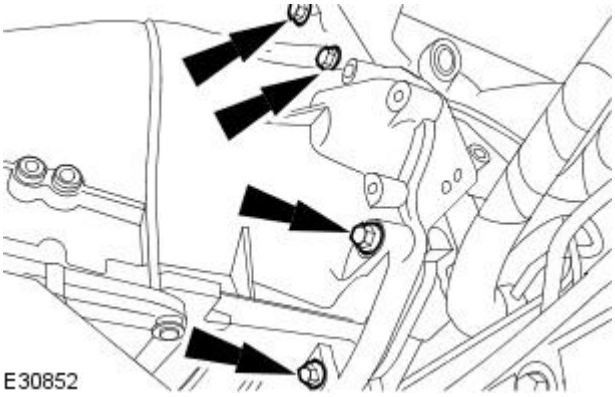

E30852

**5.** Install the automatic transmission retaining bolts.

- Tighten to 48 Nm.

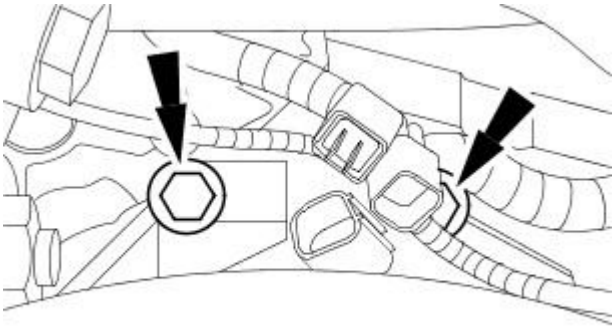

E30851

GETtheMANUALS.org

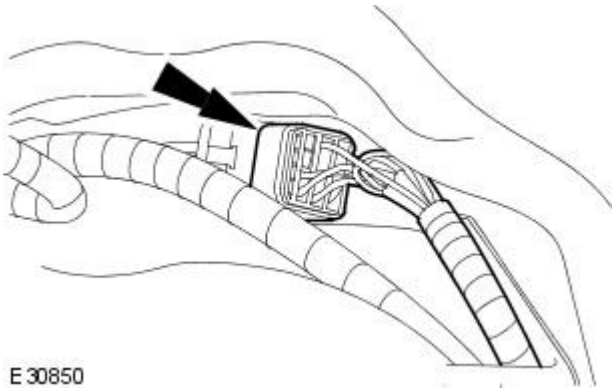


**6.** CAUTION: Make sure the transmission control module (TCM) and main control valve body is protected against electrostatic discharge. Failure to follow this instruction may result in component damage.

Connect the automatic transmission electrical connector.

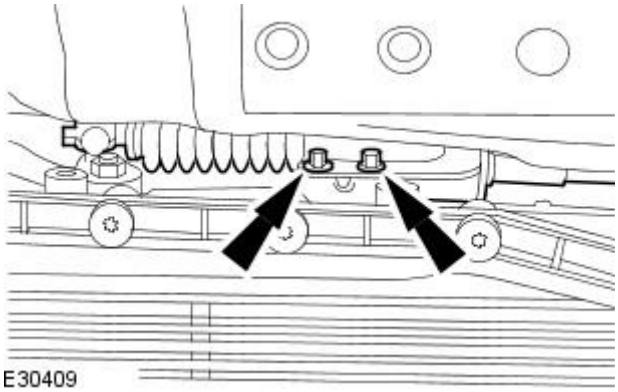


**7.** Attach the selector lever cable.

- Install the retaining bolts.
- Tighten to 11 Nm.

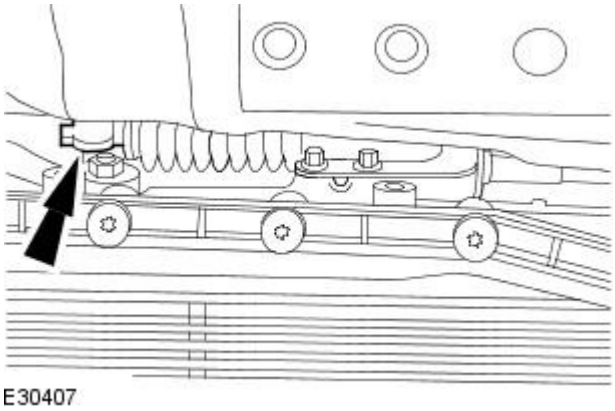


**8.** Attach the selector lever cable.

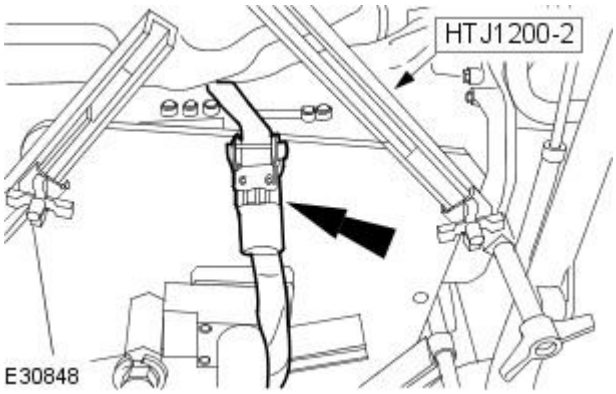


**9.** Remove the tie down strap.

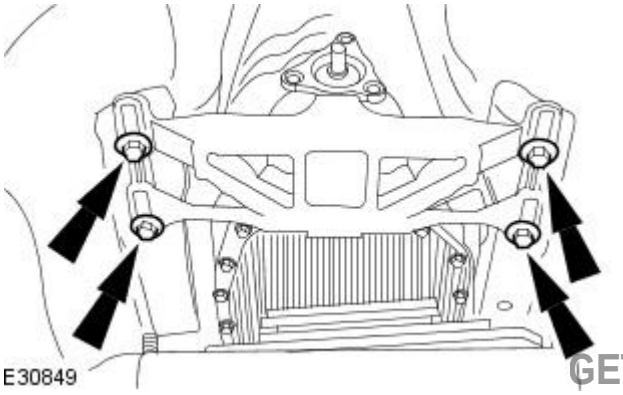


**10.** Install the automatic transmission support retaining bolts.

- Raise the rear of the transmission.
- Tighten to 50 Nm.

GETtheMANUALS.org

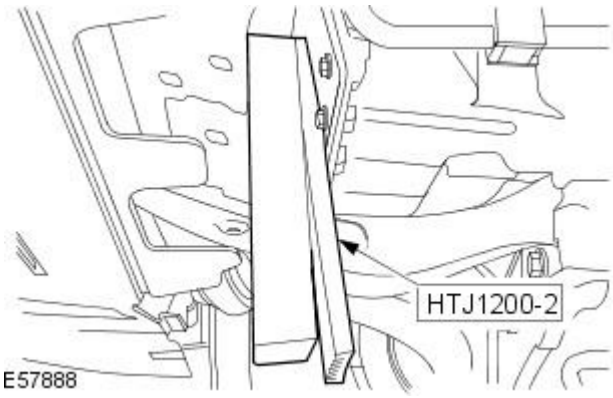


**11.** Remove the rubber blocks supplied with special tool HTJ1200-2.

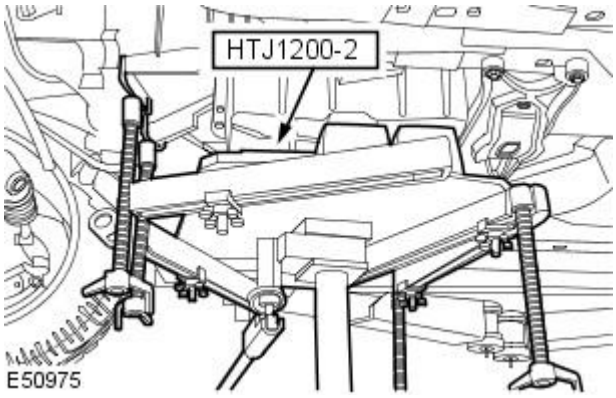


**12.** Remove the special tool.

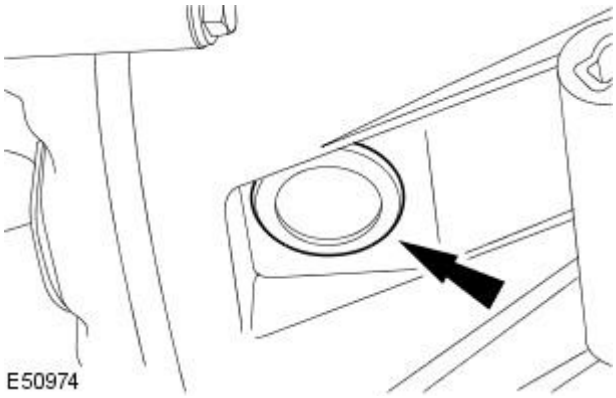


**13.** Install the torque converter rubber inspection cover.

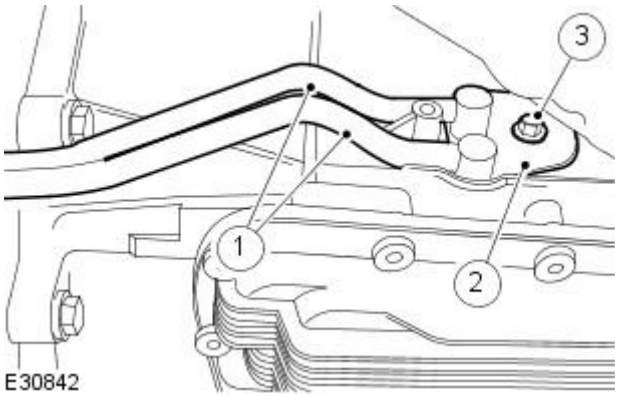


**14.** Attach the transmission fluid cooler tubes.

1. Attach the transmission fluid cooler tubes.
    1. Install new O-ring seals.
2. Install the retaining plate.
3. Install the retaining bolt.
    1. Tighten to 23 Nm.

GETtheMANUALS.org

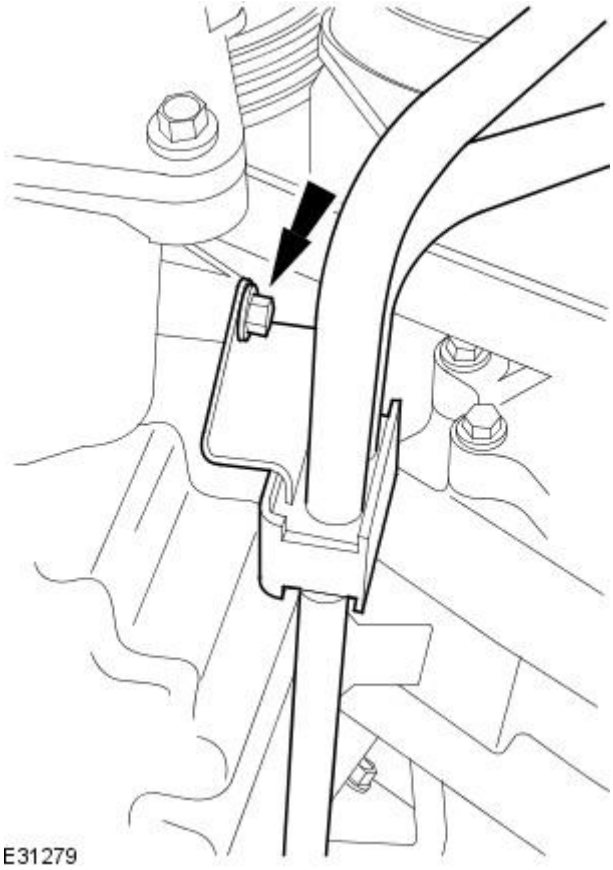


**15.** Attach the transmission fluid cooler tubes to the oil pan.

- Tighten to 10 Nm.

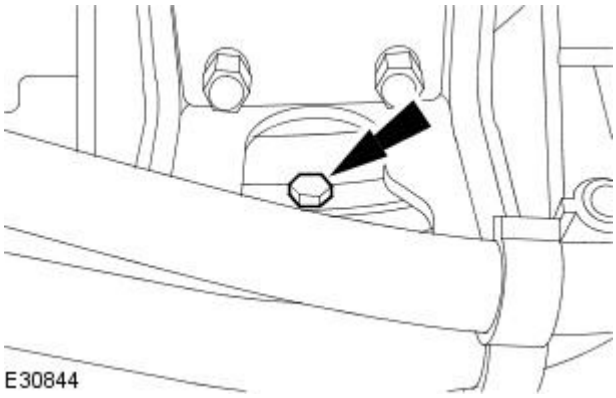


**16.** Install the torque converter retaining bolts.

- Rotate the torque converter to gain access to the remaining bolts.
- Tighten to 55 Nm.

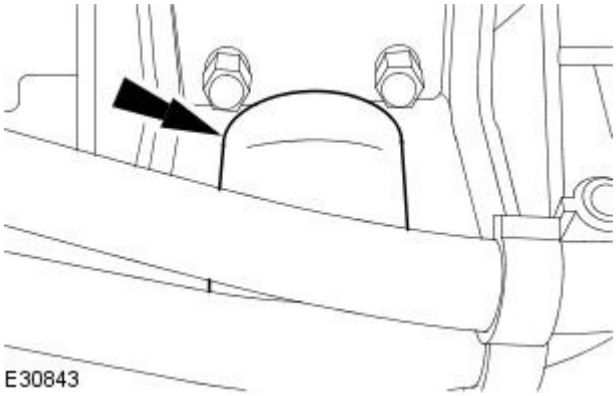


**17.** Install the rubber access cover.

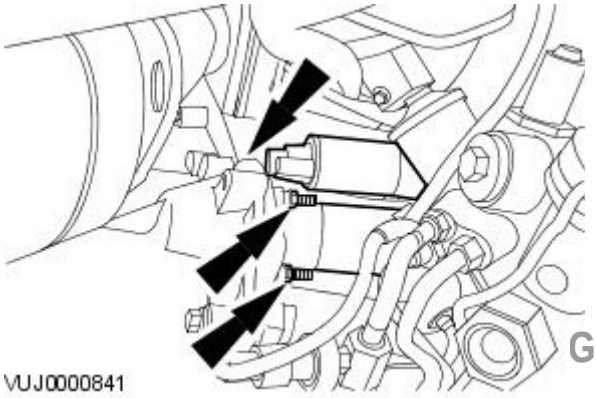


**18.** Attach the starter motor.

- Tighten to 25 Nm.

GETtheMANUALS.org

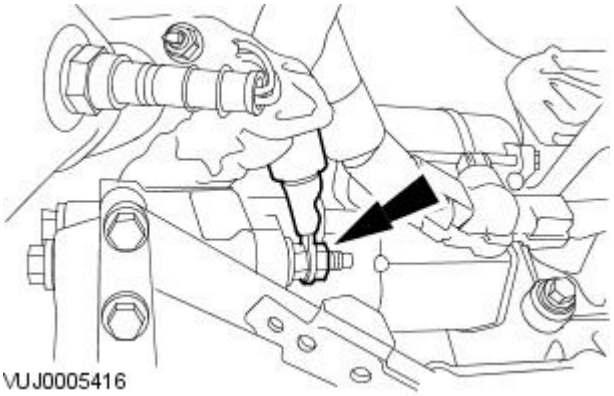


**19.** Attach the engine ground cable.

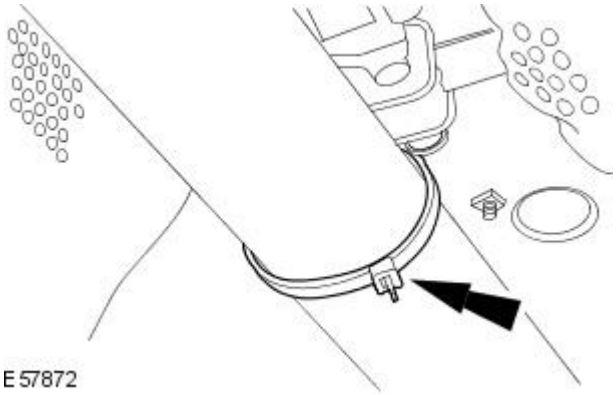


**20.** CAUTION: Make sure the front of the driveshaft does not put an excessive load on the center bearing. Failure to follow this instruction may result in damage to the vehicle.

Detach the driveshaft.

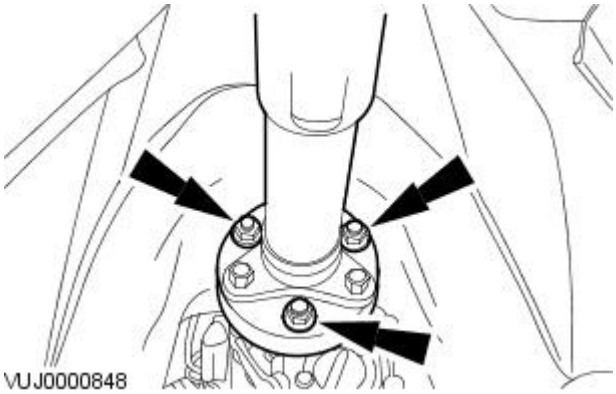


**21.** CAUTIONS:

Make sure the front of the driveshaft does not put an excessive load on the center bearing. Failure to follow this instruction may result in damage to the vehicle.

Make sure all components are installed to the position they were removed from. Failure to follow this instruction may result in damage to the vehicle.

Attach the driveshaft to the transmission flange.

- Tighten to 108 Nm.

**22.** Install the exhaust system.
For additional information, refer to: Exhaust System - V8 4.2L Petrol/V8 S/C 4.2L Petrol/2.5L NA V6 - AJV6/3.0L NA V6 - AJ27 (309-00 Exhaust System, Removal and Installation).

**23.** Connect the battery ground cable.
For additional information, refer to: Battery Connect (414-01 Battery, Mounting and Cables, General Procedures).

**24.** Carry out a transmission fluid level check.
For additional information, refer to: Transmission Fluid Level Check (307-01 Automatic Transmission/Transaxle, General Procedures).

**25.** NOTE: For NAS vehicles only.

If required, carry out a long drive cycle.
For additional information, refer to: Powertrain Control Module (PCM) Long Drive Cycle Self-Test (303-14A Electronic Engine Controls - 2.5L NA V6 - AJV6/3.0L NA V6 - AJ27, General Procedures).

GETtheMANUALS.org

# Automatic Transmission / Transaxle - Transmission2.7L V6 - TdV6

Installation

| Special Tool(s) | |
|---|---|
| E52720 | Engine Lifting Brackets<br><br>303-1129 |
| 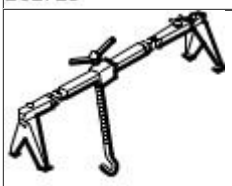 303-021 | Engine Support Bracket<br><br>303-021 |
| 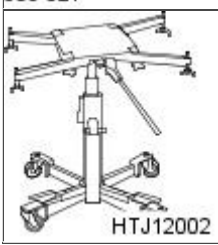 HTJ12002 | Powertrain Assembly Jack<br><br>HTJ1200-2 |

## Installation

**1.** CAUTION: If the automatic transmission fluid is very dirty or it contains metallic particles, then along with a new transmission, install a new automatic transmission fluid cooler and lines.

Flush the transmission oil cooler and fluid tubes.

**2.** NOTE: Use high-temperature grease meeting Jaguar specification.

Apply a thin layer of high-temperature grease to the centering spigot bore on the torque converter.

**3.** WARNING: Do not allow the torque converter to become disengaged from the automatic transmission. Failure to follow this instruction may result in personal injury.

CAUTION: The torque converter hub must engage fully in the oil pump drive gear throughout the whole installation procedure. Failure to follow this instruction may result in damage to the vehicle.

• NOTE: Shown with the powertrain assembly jack removed for clarity.

Install the automatic transmission to the vehicle.

- Raise the automatic transmission to the vehicle.
- Loosely install the retaining bolts.

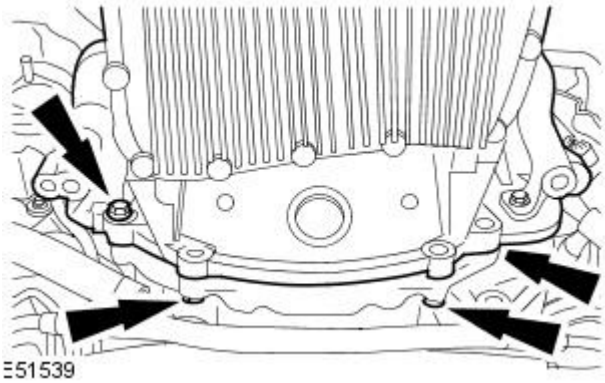

E51539

**4.** Install the retaining bolts.

- Tighten to 48 Nm.

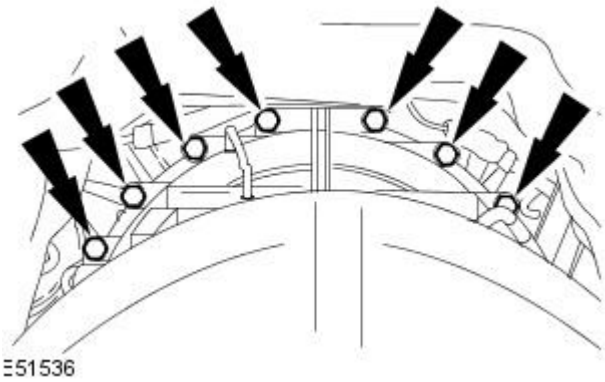

E51536

GETtheMANUALS.org

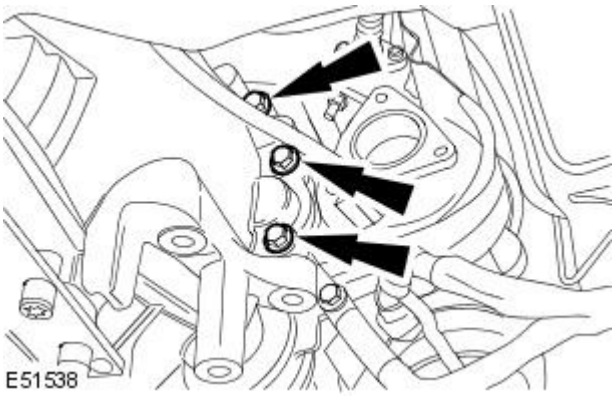


**5.** Install the retaining bolts.

- Tighten to 48 Nm.

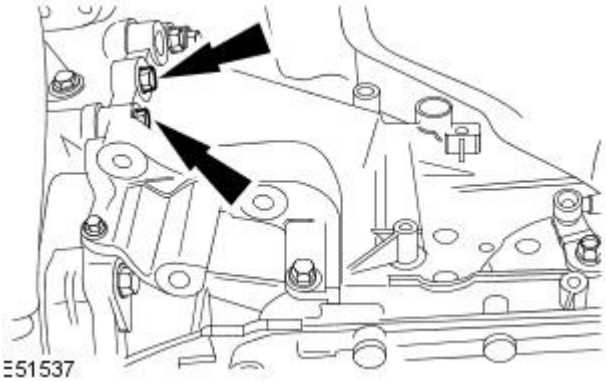


**6.** Install the retaining bolts.

- Tighten to 48 Nm.

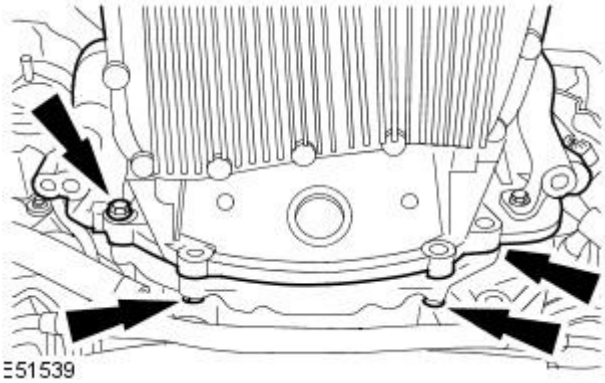


**7.** Tighten to 48 Nm.

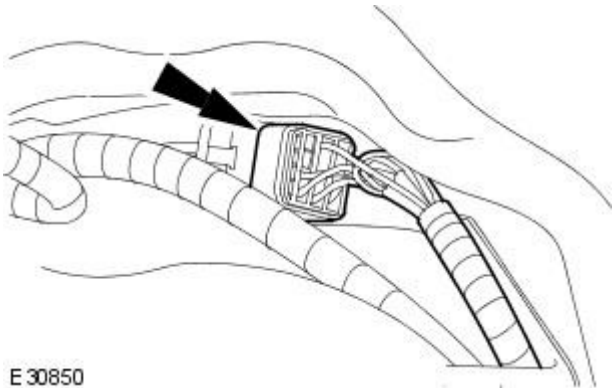


**8.** CAUTION: Make sure the transmission control module (TCM) and main control valve body is protected against electrostatic discharge. Failure to follow this instruction may result in component damage.

Connect the automatic transmission electrical connector.

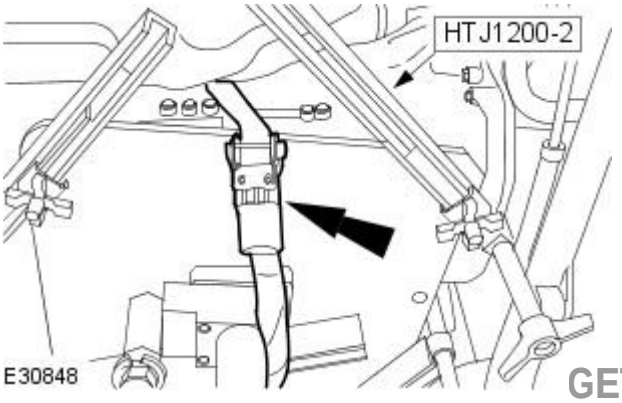


**9.** Remove the tie down strap.

GETtheMANUALS.org

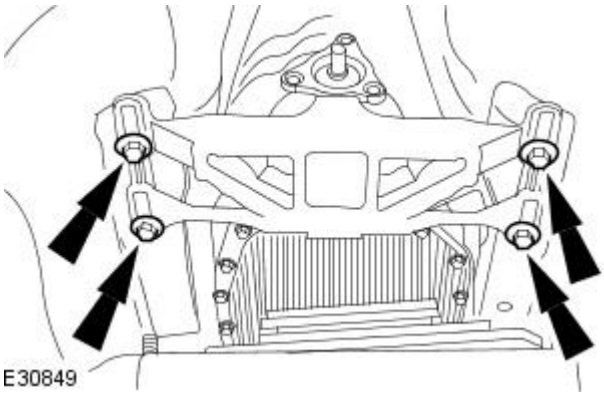


**10.** Install the automatic transmission mount retaining bolts.

- Raise the rear of the transmission.
- Tighten to 50 Nm.

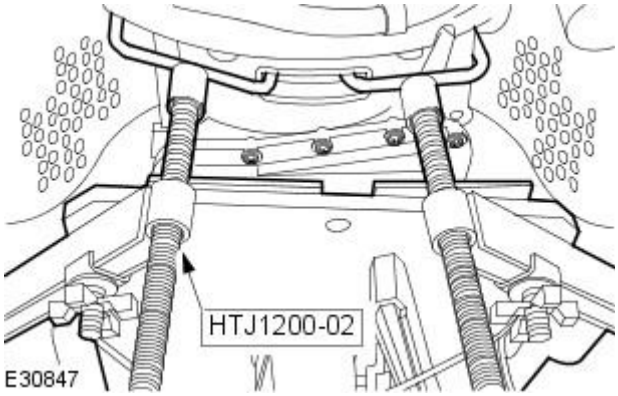


**11.** Remove the special tool.

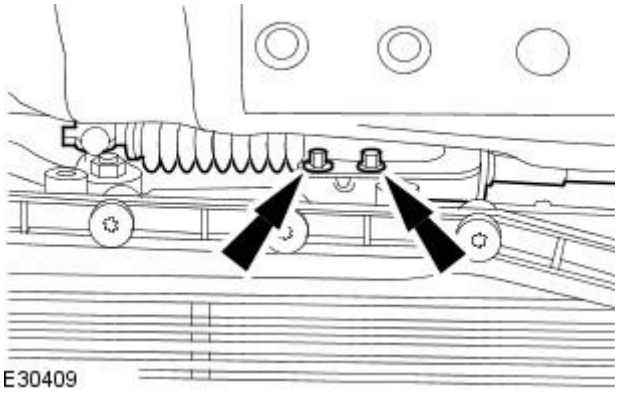


**12.** Attach the selector lever cable.

- Install the retaining bolts.
- Tighten to 11 Nm.

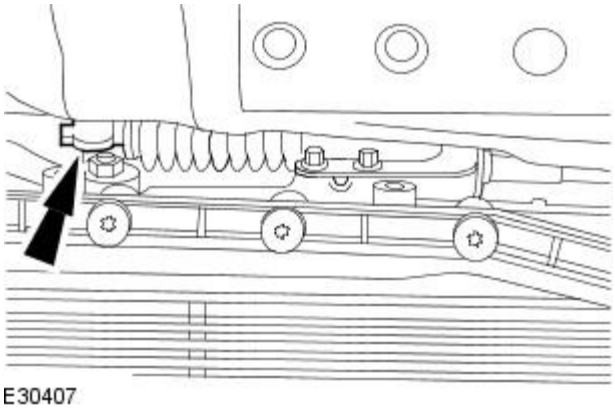


**13.** Attach the selector lever cable.

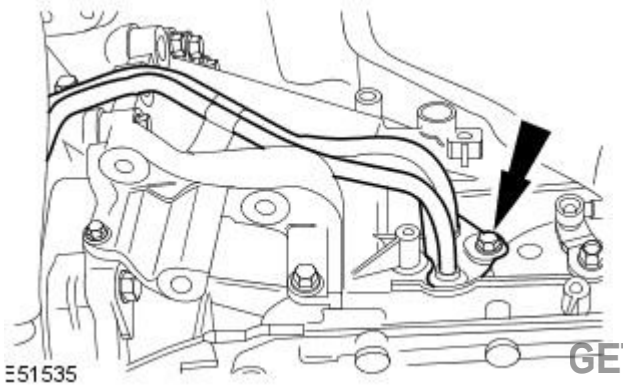


**14.** Attach the transmission fluid cooler tubes to the automatic transmission.

- Install new O-ring seals.
- Tighten to 23 Nm.

GETtheMANUALS.org

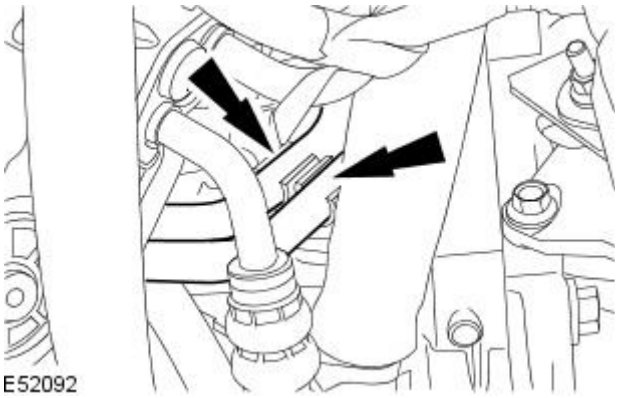


**15.** Attach the transmission fluid cooler tubes to the retaining bracket.

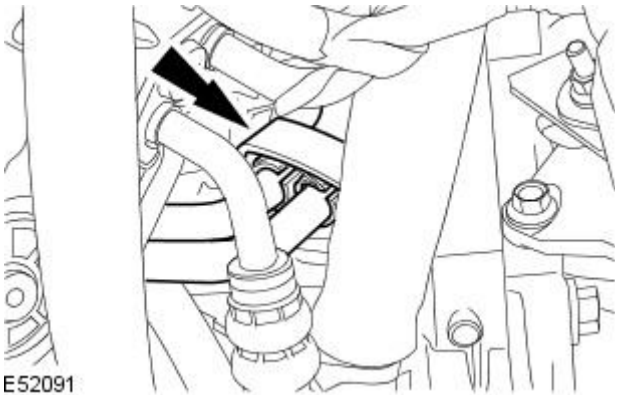


**16.** Attach the transmission fluid cooler tube bracket.

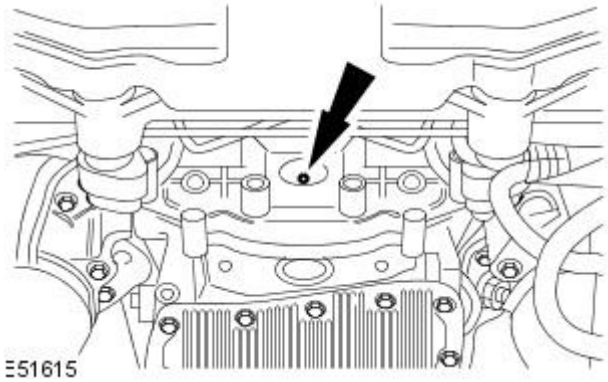


**17.** Install the retaining bolts.

- Rotate the torque converter to gain access to the remaining bolts.
- Tighten to 55 Nm.

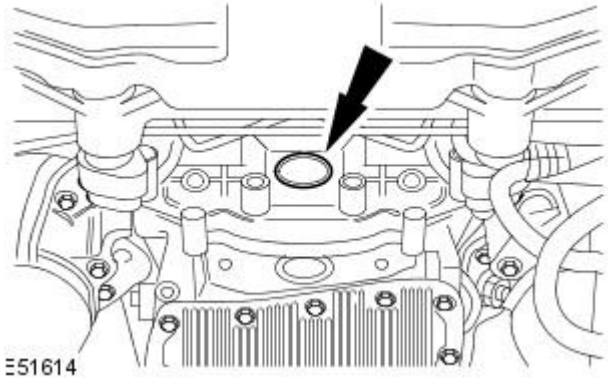


**18.** Install the rubber access cover.

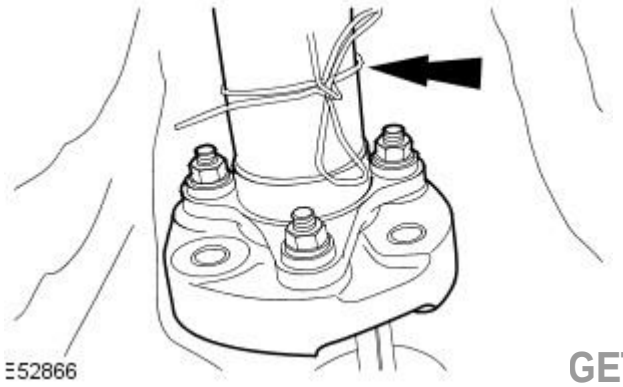


**19.** CAUTION: Make sure the front of the driveshaft does not put an excessive load on the center bearing. Failure to follow this instruction may result in damage to the vehicle.

Reposition the driveshaft.

- Undo the cord.

GETtheMANUALS.org

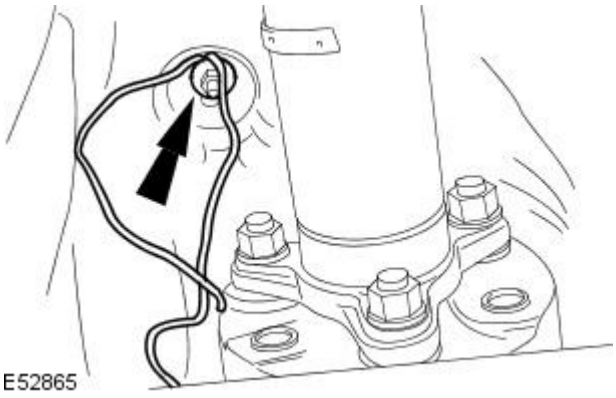


**20.** Loosen the retaining nut.

- Remove the cord from the heat shield retaining nut stud.

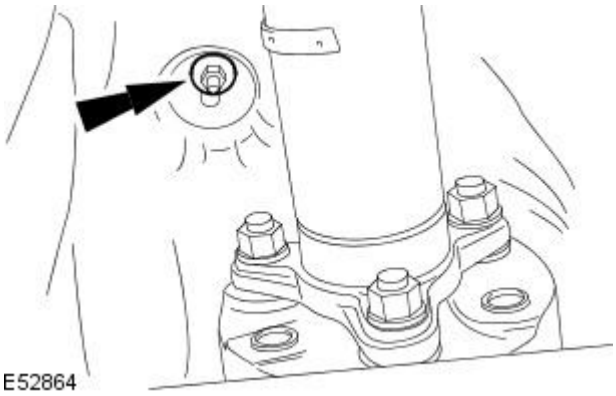


**21.** Tighten the retaining nut.

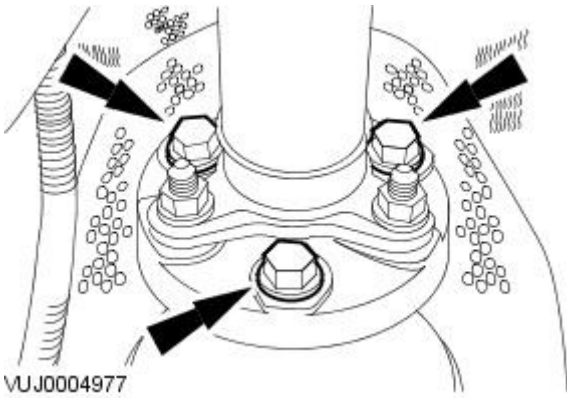


**22.** CAUTIONS:

Make sure the front of the driveshaft does not put an excessive load on the center bearing. Failure to follow this instruction may result in damage to the vehicle.

Make sure all components are installed to the position they were removed from. Failure to follow this instruction may result in damage to the vehicle.

Attach the driveshaft to the transmission flange.

- Tighten to 88 Nm.

**23.** Install both catalytic converters.
For additional information, refer to: Catalytic Converter - 2.7L Diesel (309-00 Exhaust System, Removal and Installation).

**24.** Connect the battery ground cable.
For additional information, refer to: Battery Connect (414-01 Battery, Mounting and Cables, General Procedures).

**25.** Remove the special tool.

- Loosen the special tool adjustment bolt.

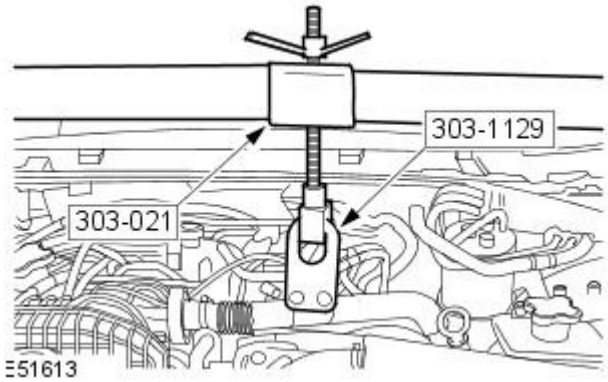


GETtheMANUALS.org

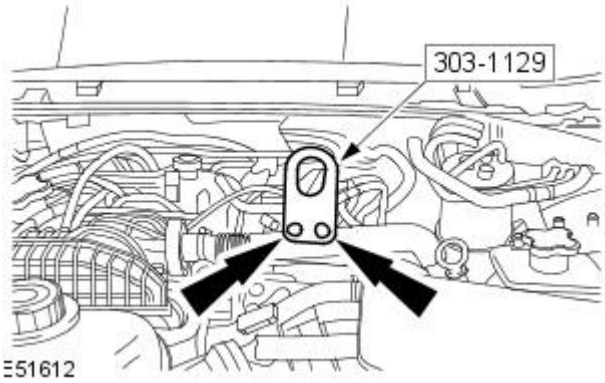


**26.** Remove the special tool.

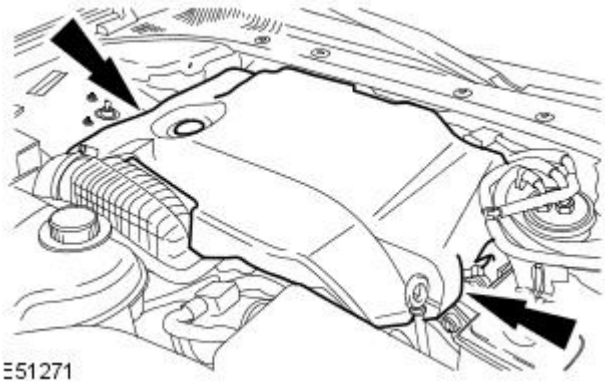


**27.** Install the engine cover.

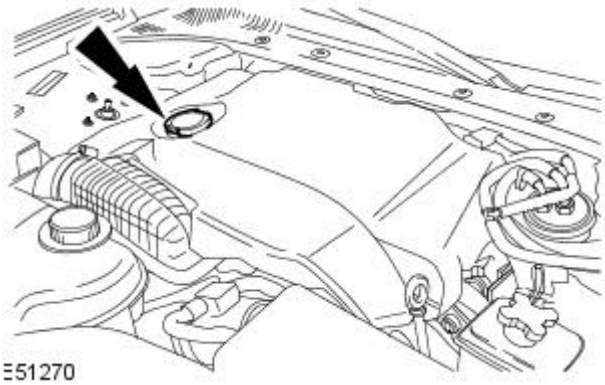


**28.** Install the filler cap.

**29.** Carry out a transmission fluid level check.
For additional information, refer to: Transmission Fluid Level Check (307-01 Automatic Transmission/Transaxle, General Procedures).

GETtheMANUALS.org

# Automatic Transmission / Transaxle - TransmissionV8 4.2L Petrol / V8 S/C 4.2L Petrol

Installation

| Special Tool(s) | |
|---|---|
| 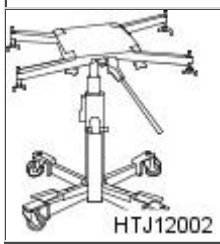 HTJ12002 | Powertrain Assembly Jack<br><br>HTJ1200-2 |

## Installation

**1.** CAUTION: If the automatic transmission fluid is very dirty or it contains metallic particles, then along with a new transmission, install a new automatic transmission fluid cooler and lines.

Flush the transmission oil cooler and fluid tubes.

**2.** NOTE: Use high-temperature grease meeting Jaguar specification.

Apply a thin layer of high-temperature grease to the centering spigot bore on the torque converter.

**3.** WARNING: Do not let the torque converter drop out of the automatic transmission. Failure to follow this instruction may result in personal injury.

CAUTION: The torque converter hub must engage fully in the oil pump drive gear throughout the whole installation procedure.

Install the automatic transmission to the vehicle.

- Raise the automatic transmission to the vehicle.
- Install the retaining bolts.
- Tighten to 48 Nm.

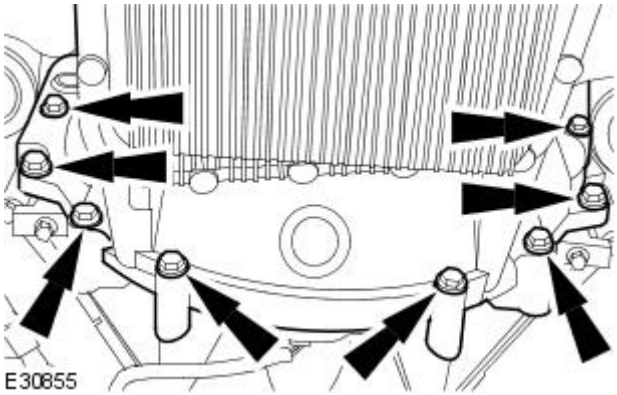


**4.** Install the automatic transmission retaining bolts.

- Tighten to 48 Nm.

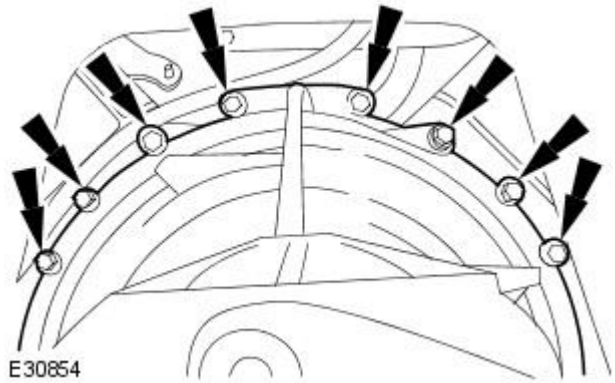


**5.** Install the torque converter retaining bolts.

- Rotate the torque converter to gain access to the remaining bolts.
- Tighten to 55 Nm.

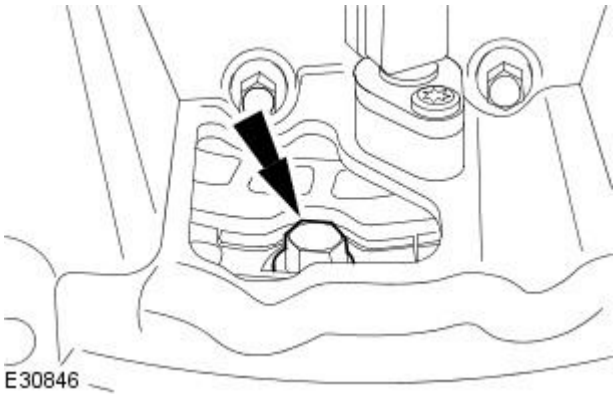


GETtheMANUALS.org

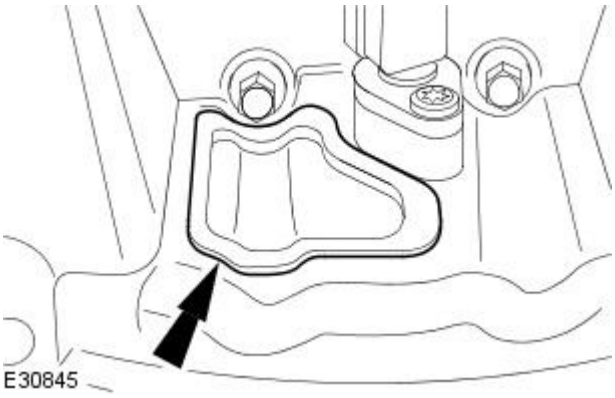


**6.** Install the rubber access cover.

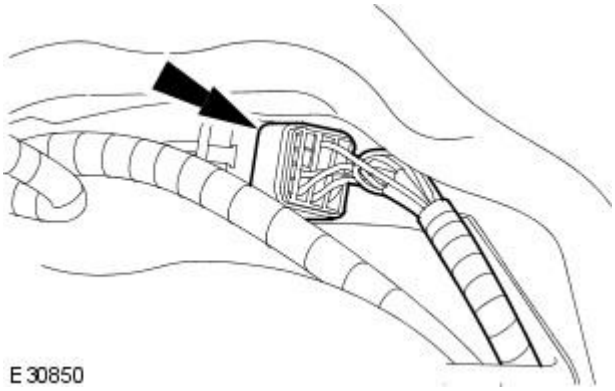


**7.** CAUTION: Make sure the transmission control module (TCM) and main control valve body is protected against electrostatic discharge. Failure to follow this instruction may result in component damage.

Connect the automatic transmission electrical connector.

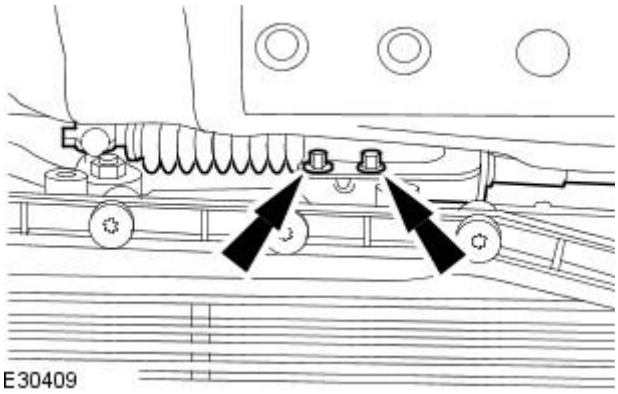


**8.** Attach the selector lever cable.

- Install the retaining bolts.
- Tighten to 11 Nm.

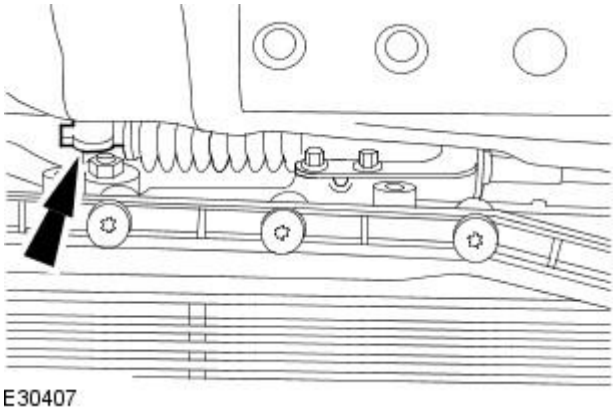


**9.** Attach the selector lever cable.

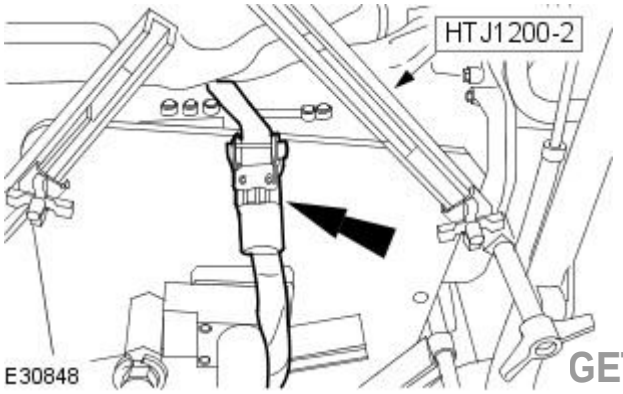


**10.** Remove the tie down strap.

GETtheMANUALS.org

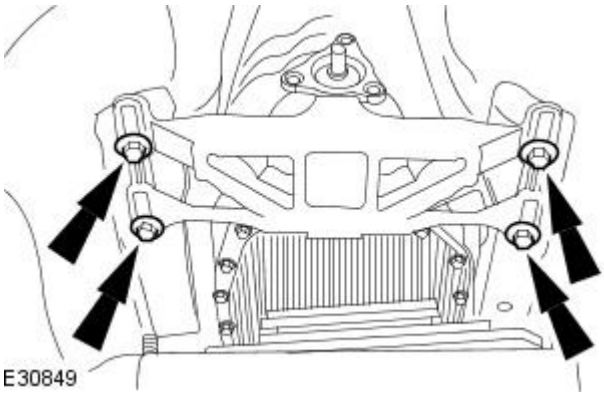


**11.** Install the automatic transmission support retaining bolts.

- Raise the rear of the transmission.
- Tighten to 50 Nm.

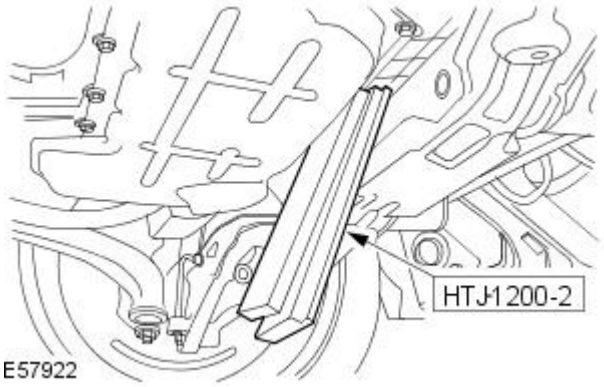


**12.** Remove the rubber blocks supplied with special tool HTJ1200-2.

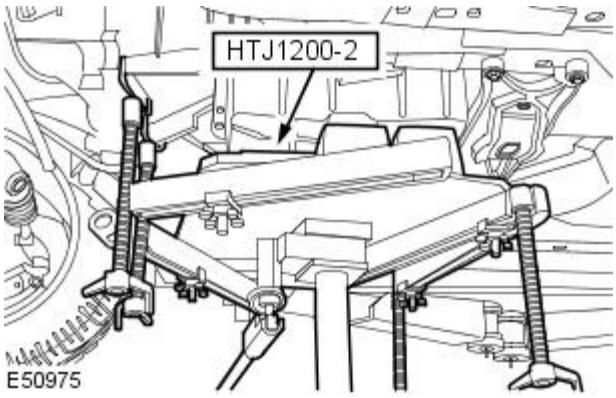


**13.** Remove the special tool.

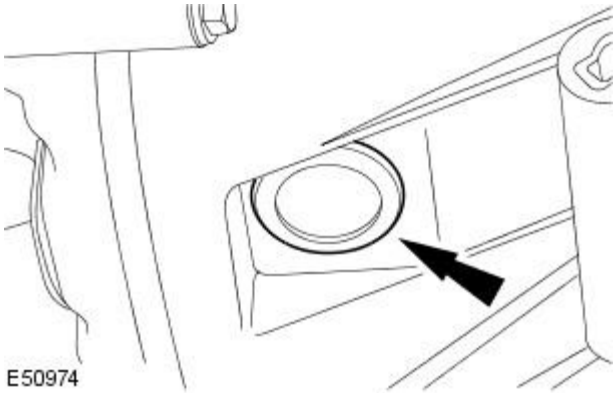


**14.** Install the torque converter rubber inspection cover.

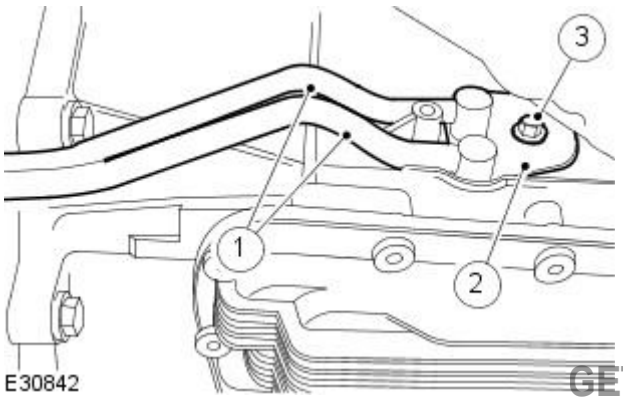


**15.** Attach the transmission fluid cooler tubes.

1. Attach the transmission fluid cooler tubes.
   1. Install new O-ring seals.
2. Install the retaining plate.
3. Install the retaining bolt.
   1. Tighten to 23 Nm.

GETtheMANUALS.org

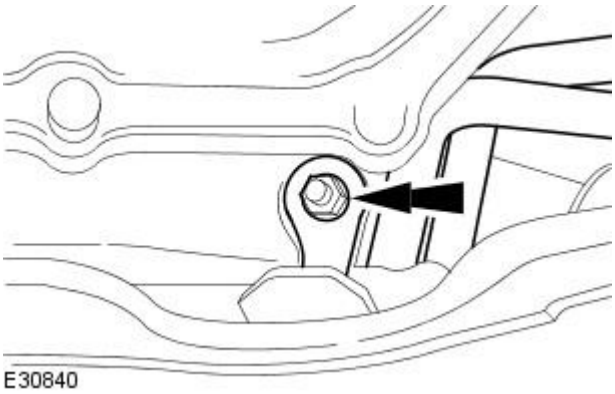


**16.** Attach the transmission fluid cooler tubes to the oil pan.

- Tighten to 10 Nm.

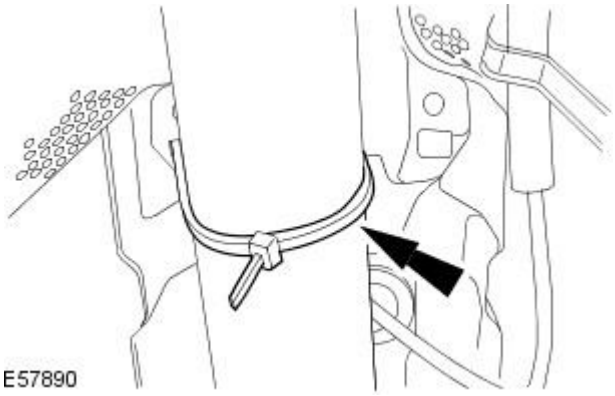


**17.** CAUTION: Make sure the front of the driveshaft does not put an excessive load on the center bearing. Failure to follow this instruction may result in damage to the vehicle.

Detach the driveshaft.

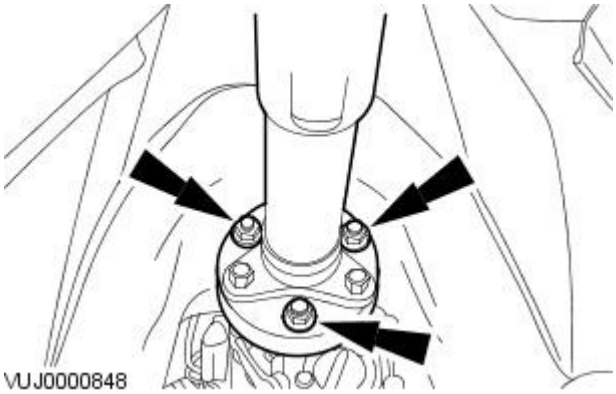


**18.** CAUTIONS:

Make sure the front of the driveshaft does not put an excessive load on the center bearing. Failure to follow this instruction may result in damage to the vehicle.

Make sure all components are installed to the position they were removed from. Failure to follow this instruction may result in damage to the vehicle.

Attach the driveshaft to the transmission flange.

- Tighten to 108 Nm.

**19.** Install the exhaust system.
For additional information, refer to: Exhaust System - V8 4.2L Petrol/V8 S/C 4.2L Petrol/2.5L NA V6 - AJV6/3.0L NA V6 - AJ27 (309-00 Exhaust System, Removal and Installation).

**20.** Connect the battery ground cable.
For additional information, refer to: Battery Connect (414-01 Battery, Mounting and Cables, General Procedures).

**21.** Carry out a transmission fluid level check.
For additional information, refer to: Transmission Fluid Level Check (307-01 Automatic Transmission/Transaxle, General Procedures).

**22.** NOTE: For NAS vehicles only.

If required, carry out a long drive cycle.
For additional information, refer to: Powertrain Control Module (PCM) Long Drive Cycle Self-Test (303-14A Electronic Engine Controls - 2.5L NA V6 - AJV6/3.0L NA V6 - AJ27, General Procedures).

GETtheMANUALS.org

# Transmission / Transaxle Cooling -

**General Specifications**

| Item | Specification |
|---|---|
| Transmission fluid type | ATF Shell M1375.4 |

**Torque Specifications**

| Description | Nm | lb-ft | lb-in |
|---|---|---|---|
| Transmission fluid cooler tube to transmission fluid cooler retaining bolt - Vehicles with diesel engines | 10 | - | 89 |
| Transmission fluid cooler tubes to transmission fluid cooler retaining bolt - Vehicles without diesel engines | 20 | 15 | - |
| Transmission fluid cooler tubes to transmission | 22 | 16 | - |
| Transmission fluid cooler tubes to engine oil pan | 22 | 16 | - |

GETtheMANUALS.org

# Transmission / Transaxle Cooling - Transmission Cooling

Description and Operation

All except vehicles with diesel engine

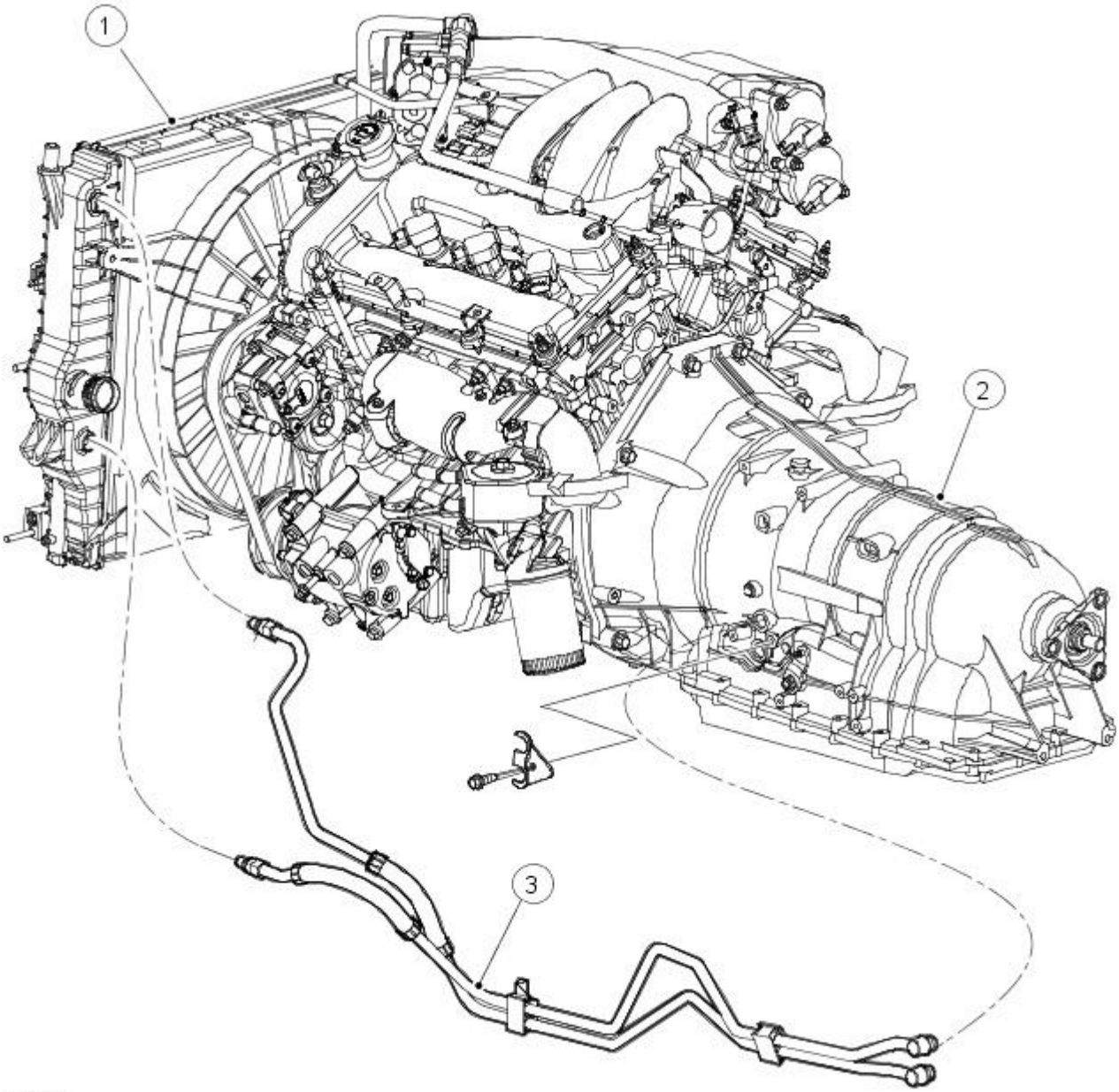


E31043

| Item | Part Number | Description |
|---|---|---|
| 1 | — | Fluid cooler |
| 2 | — | Transmission |
| 3 | — | Fluid cooler tubes |

Fluid Cooler

The fluid cooler is of an aluminium construction consisting of a tube and louvered fin core-type, the tubes are arranged horizontally for the crossflow of the fluid.

It is divided into two sections to provide cooling for both the transmission and the engine, each section is separate within the same unit.

When carrying out any transmission procedures the drained fluid should be checked thoroughly for any metal filings or particles, in the event of this the transmission fault should be located followed by a thorough flushing of the fluid cooler and fluid cooler tubes.

Vehicles with diesel engine

GETtheMANUALS.org

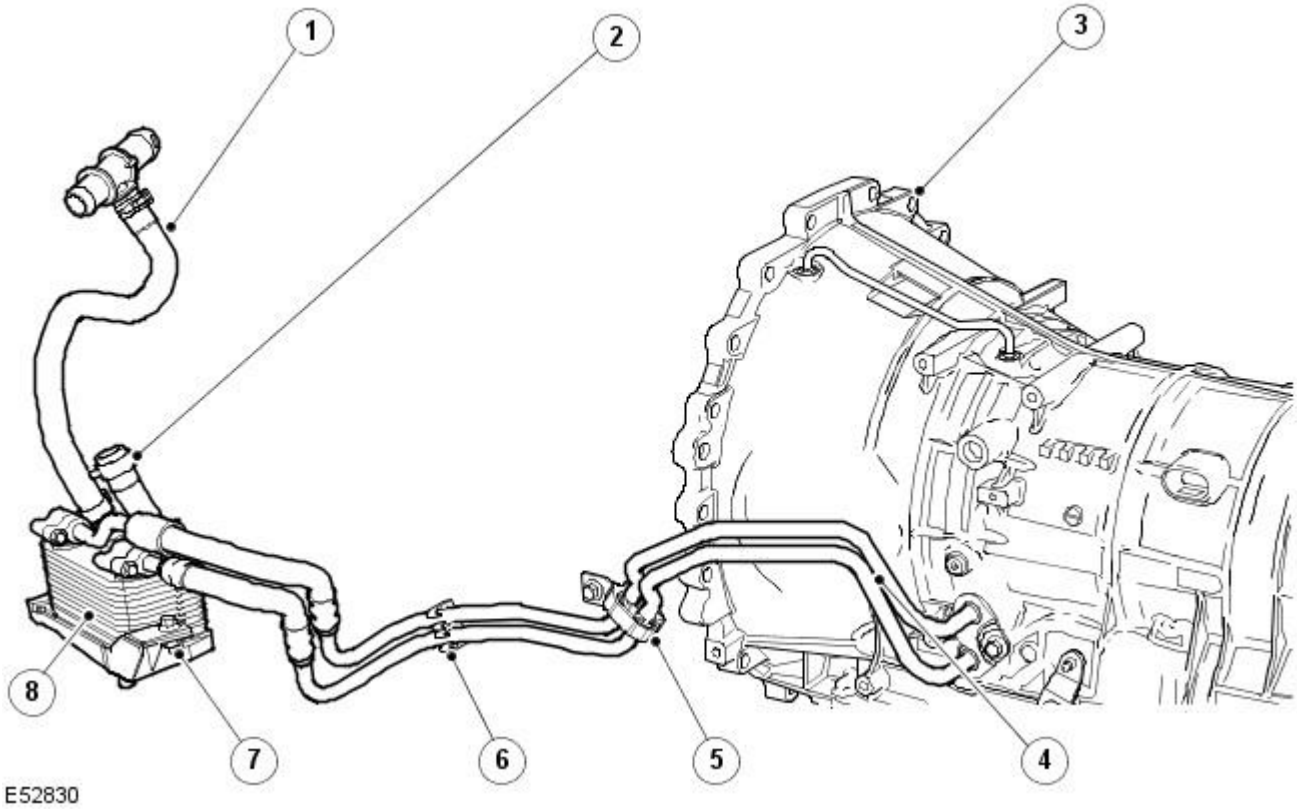


| Item | Part Number | Description |
|---|---|---|
| 1 | — | Fluid cooler inlet hose |
| 2 | — | Fluid cooler outlet hose |
| 3 | — | Transmission |
| 4 | - | Fluid cooler tubes |
| 5 | - | Fluid cooler tube retaining bracket |
| 6 | - | Fluid cooler tube retaining bracket |
| 7 | - | Fluid cooler retaining bracket |
| 8 | - | Fluid cooler |

## Fluid Cooler

The fluid cooler is mounted to the left-hand side of the front subframe via a retaining bracket. The fluid cooler is cooled by the engine coolant system.

When carrying out any transmission procedures the drained fluid should be checked thoroughly for any metal filings or particles, in the event of this the transmission fault should be located followed by a thorough flushing of the fluid cooler and fluid cooler tubes.

GETtheMANUALS.org

# Transmission / Transaxle Cooling - Transmission Cooling

Diagnosis and Testing

## Inspection and Verification

1. **1.** Verify the customer concern by operating the system.
2. **2.** Visually inspect for obvious signs of mechanical or electrical damage.

**Visual Inspection Chart**

| Mechanical |
|---|
| • Feed and return tubes<br>• Connections to the automatic transmission and the automatic transmission fluid cooler<br>• Automatic transmission fluid level |

3. **3.** If an obvious cause for an observed or reported concern is found, correct the cause (if possible) before proceeding to the next step.
4. **4.** If the concern is not visually evident, verify the sympton and refer to the Sympton chart.

## Symptom chart

| Condition | Possible sources | Action |
|---|---|---|
| Over heating of the automatic transmission. | Obstruction in the automatic transmission fluid cooler. | • Flush out the automatic transmission fluid cooler with new automatic transmission fluid.<br>• If the flushing is unsucessful install a new automatic transmission fluid cooler. |
| Over heating of the automatic transmission. | Obstruction in the automatic transmission fluid tubes. | • Flush out the automatic transmission fluid cooler tubes with new automatic transmission fluid.<br>• If the flushing is unsucessful install new automatic transmission fluid cooler tubes. |
| Loss of automatic transmission fluid | Connections to the automatic transmission and the automatic transmission fluid cooler. | • Check the torque of the tubes.<br>• Check the tubes, connections and seals. |
| Loss of automatic transmission fluid | Leak at oil cooler. | • Check the torque of the tubes.<br>• Check the tubes, connections and seals.<br>• INSTALL new oil cooler. |

GETtheMANUALS.org

# Transmission / Transaxle Cooling - Transmission Fluid Cooler

Removal and Installation

| Special Tool(s) | |
|---|---|
| | Remover/Installer, Cooling Hose Clamp<br><br>303-397 (24-003) |

## Removal

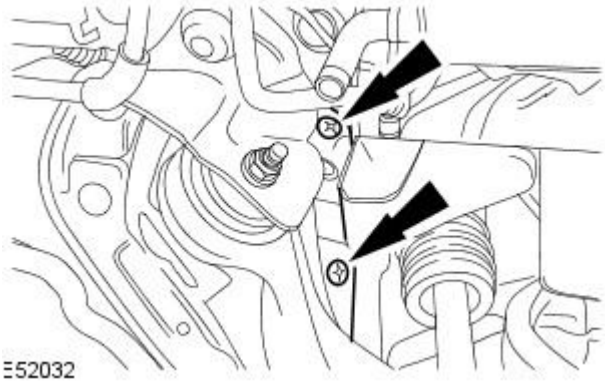


1. Remove the air deflector.
   For additional information, refer to: Air Deflector (501-02 Front End Body Panels, Removal and Installation).
2. Remove the splash shield.

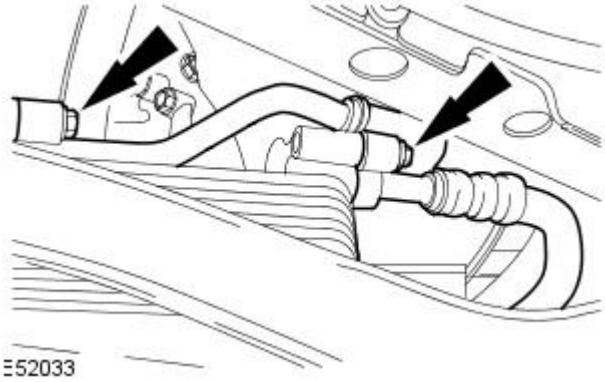


3. Detach the transmission fluid cooler tubes.
   - Allow the transmission fluid to drain into a suitable container.
   - Remove and discard the O-ring seals.

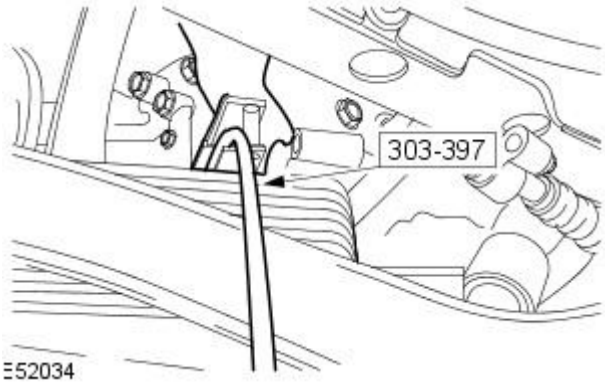


4. NOTE: Clamp the coolant hose to minimize coolant loss.

   Using the special tool, detach the transmission fluid cooler coolant hose.

GETtheMANUALS.org

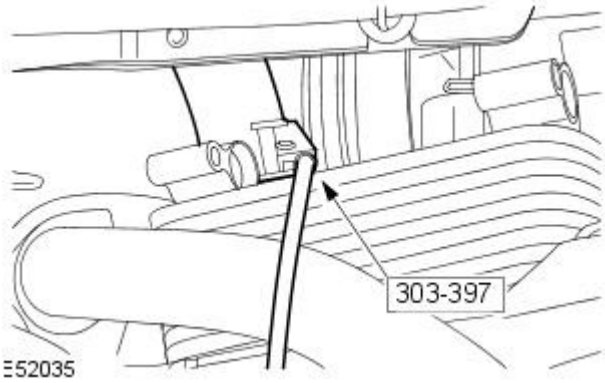


**5.** NOTE: Clamp the coolant hose to minimize coolant loss.

Using the special tool, detach the transmission fluid cooler coolant hose.

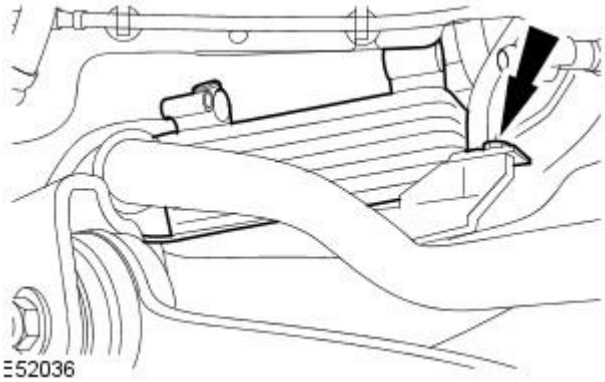


**6.** Detach the transmission fluid cooler.

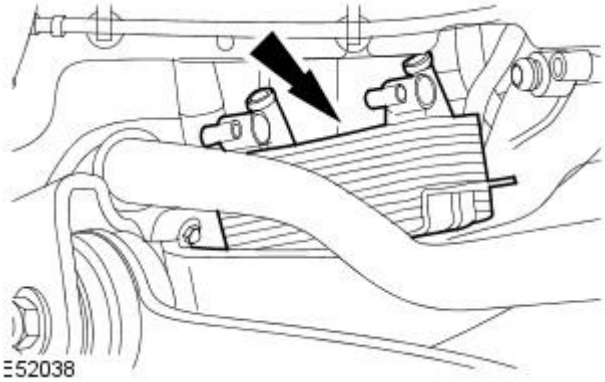


**7.** Remove the transmission fluid cooler.

## Installation

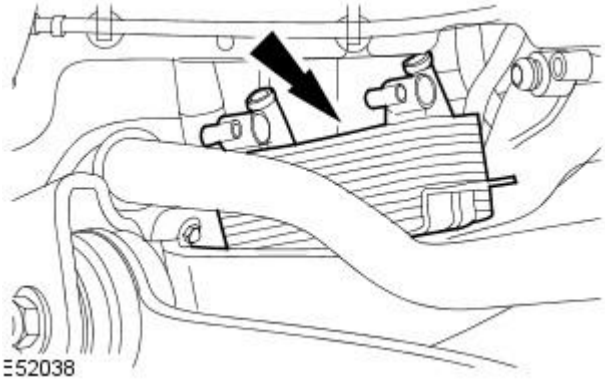


**1.** Install the transmission fluid cooler.

GETtheMANUALS.org

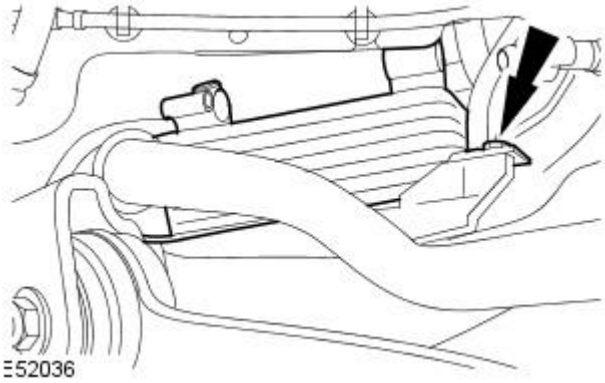


**2.** Attach the transmission fluid cooler.

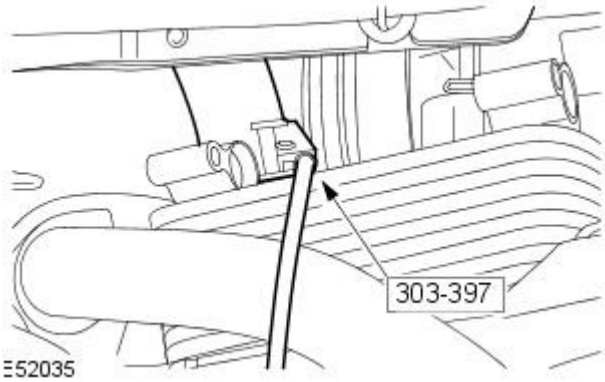


**3.** Using the special tool, attach the transmission fluid cooler coolant hose.

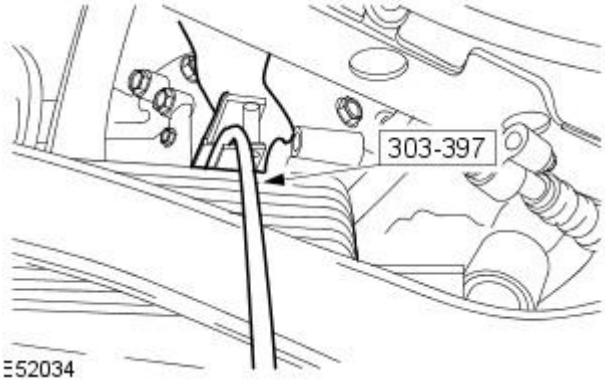


**4.** Using the special tool, attach the transmission fluid cooler coolant hose.

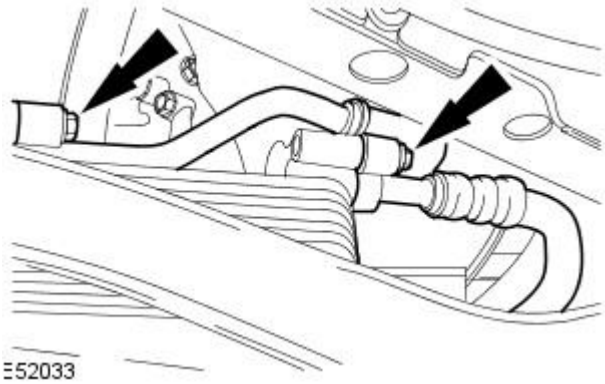


**5.** Attach the transmission fluid cooler tubes.

- Install new O-ring seals.
- Tighten to 10 Nm.

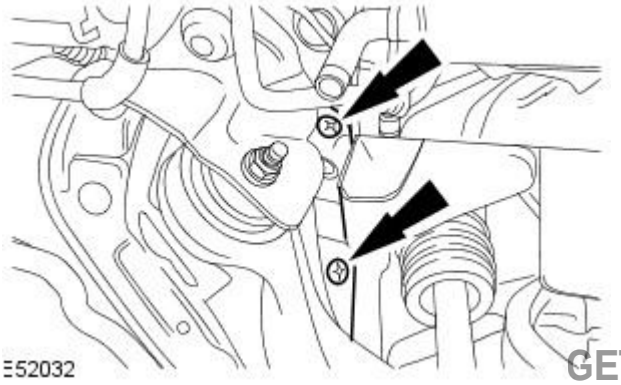


**6.** Install the splash shield.

**7.** Install the air deflector.

For additional information, refer to: Air Deflector (501-02 Front End Body Panels, Removal and Installation).

**8.** Carry out a transmission fluid level check.
For additional information, refer to: Transmission Fluid Level Check (307-01 Automatic Transmission/Transaxle, General Procedures).

GETtheMANUALS.org

GETtheMANUALS.org

# Transmission / Transaxle Cooling - Transmission Fluid Cooler Tubes

Removal and Installation

| Special Tool(s) | |
|---|---|
| E52720 | Engine lifting brackets<br><br>303-1129 |
| 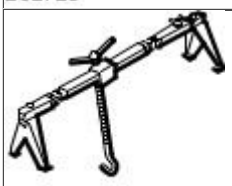 303-021 | Engine Support Beam<br><br>303-021 |
| 502-005 | Subframe Alignment Bolt<br><br>502-005 |

## Removal

1. Center the steering wheel.
   - Lock in position, remove the ignition key.
2. Remove the air deflector.
   For additional information, refer to: Air Deflector (501-02 Front End Body Panels, Removal and Installation).
3. Remove the splash shield.

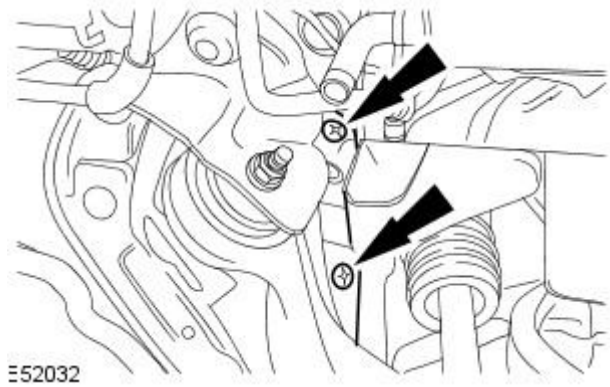


4. Detach the transmission fluid cooler tubes.
   - Allow the transmission fluid to drain into a suitable container.
   - Remove and discard the O-ring seals.

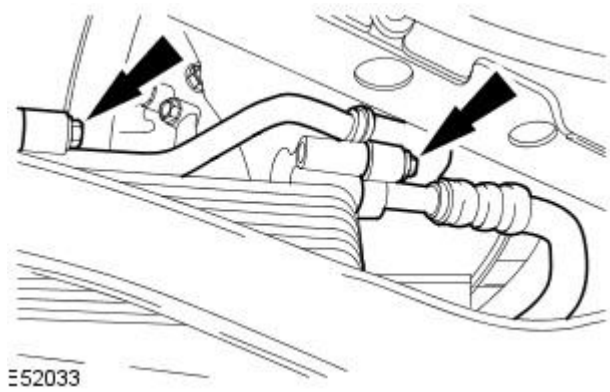


GETtheMANUALS.org

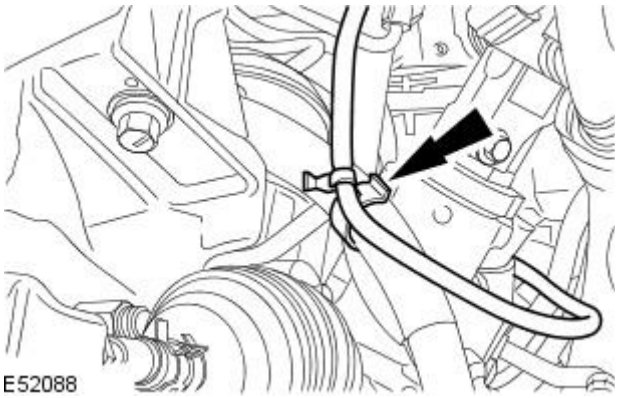


**5.** Detach the wiring harness.

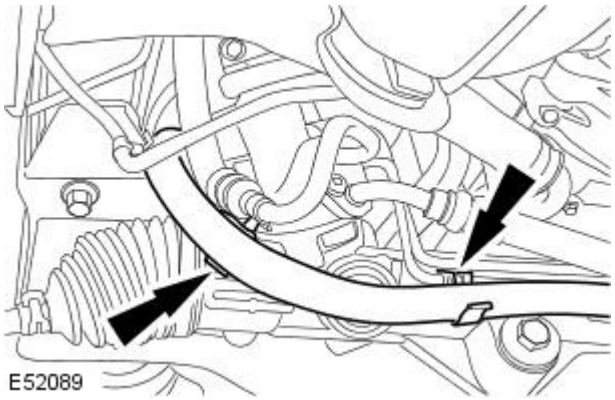


**6.** Detach the hose.

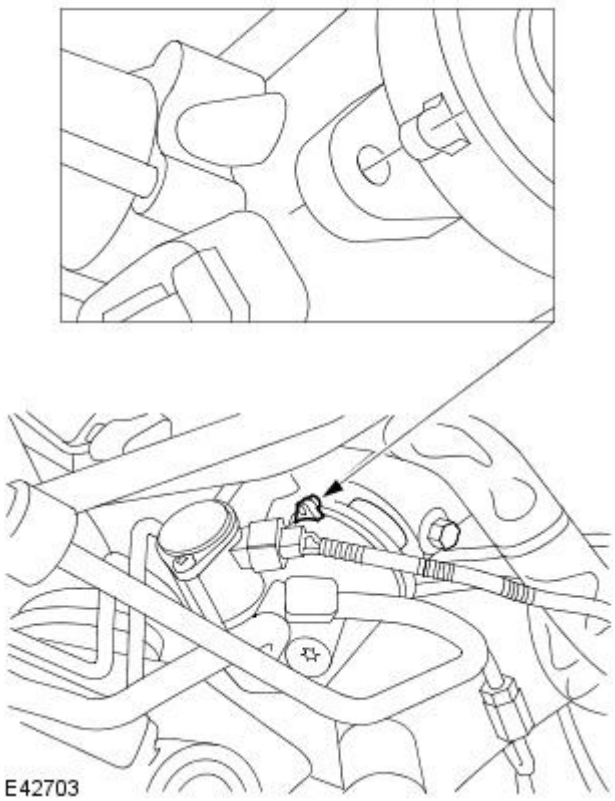


**7.** Make sure the alignment mark on the steering gear pinion seal protection cover is central to the steering gear pinion casting.

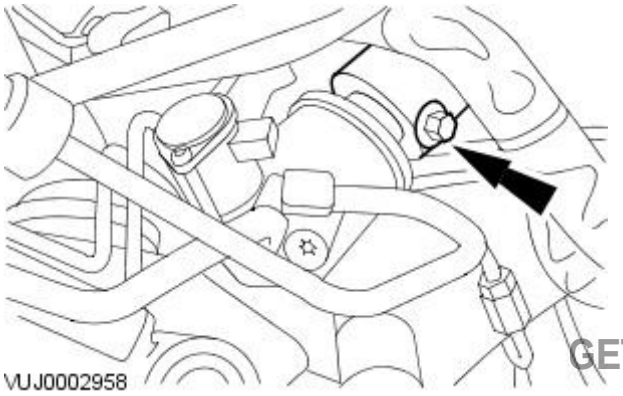


**8.** Detach the lower steering column.

- Remove the steering gear shaft pinch bolt.

GETtheMANUALS.org

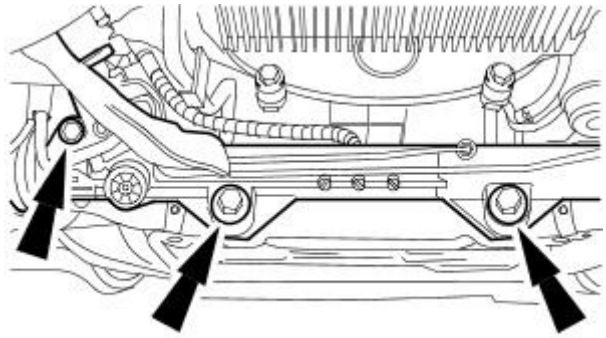


**9.** Detach the steering gear.

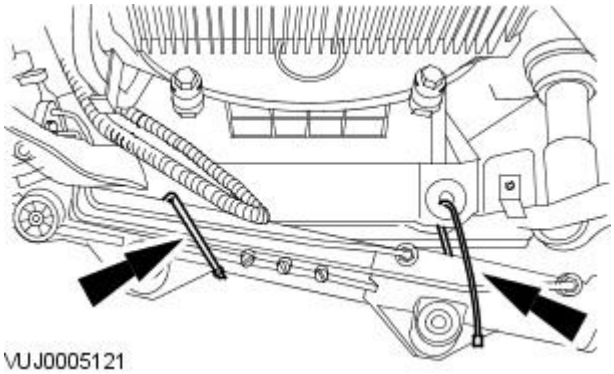


**10.** Secure the steering gear.

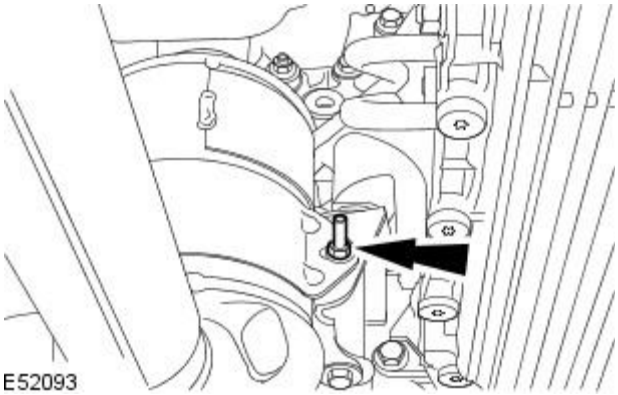


**11.** Remove the retaining nut.

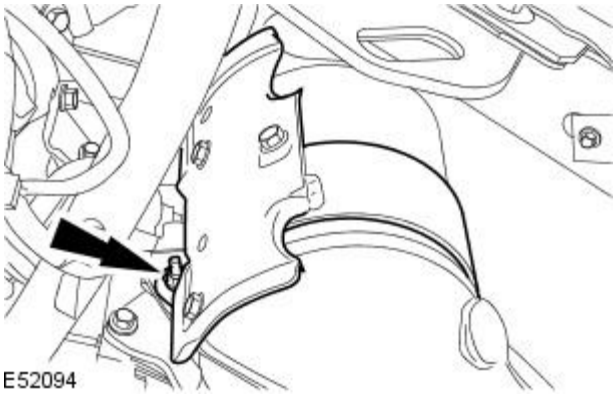


**12.** Remove the catalyst heat shield.

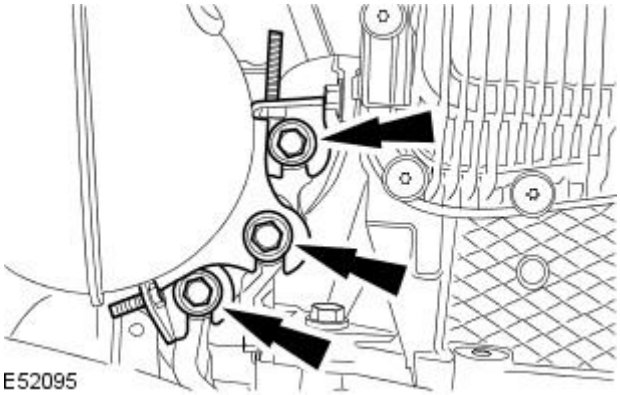


**13.** Remove the catalyst heat shield retaining bracket.

GETtheMANUALS.org

**14.** Remove the retaining bracket.

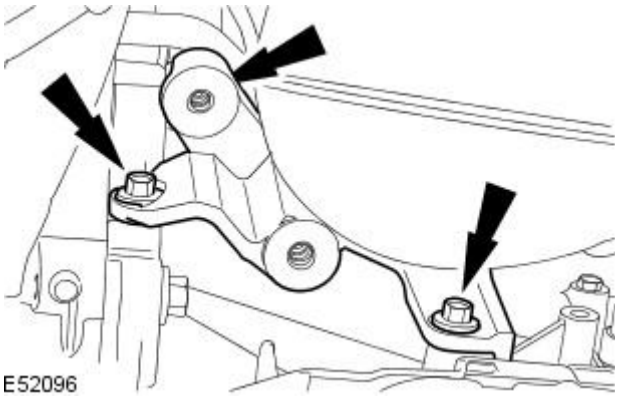


**15.** Remove the retaining nut.

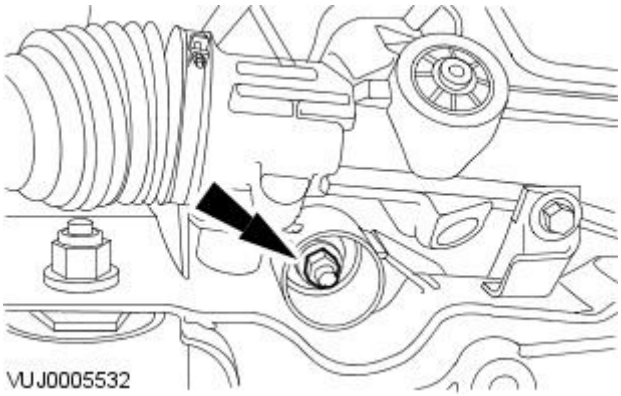


**16.** Lower the vehicle.

**17.** Remove the filler cap.

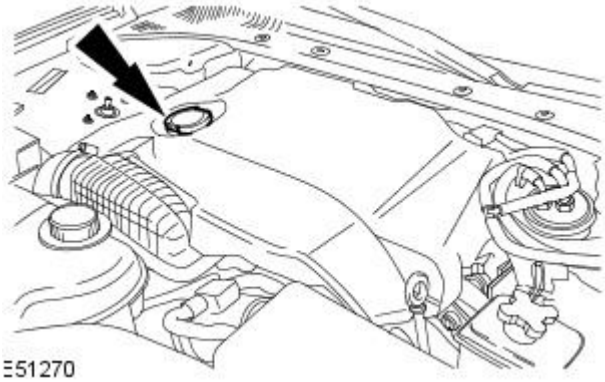


**18.** Remove the engine cover.

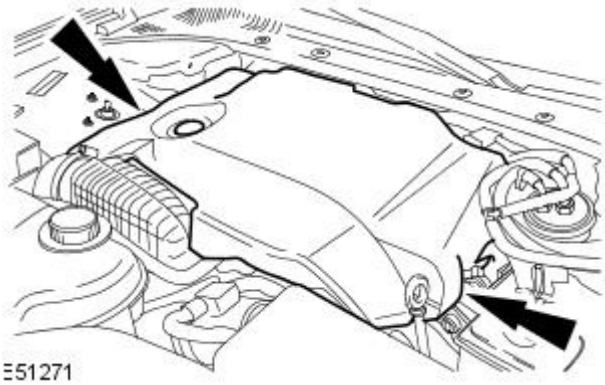


**19.** Install the special tool.

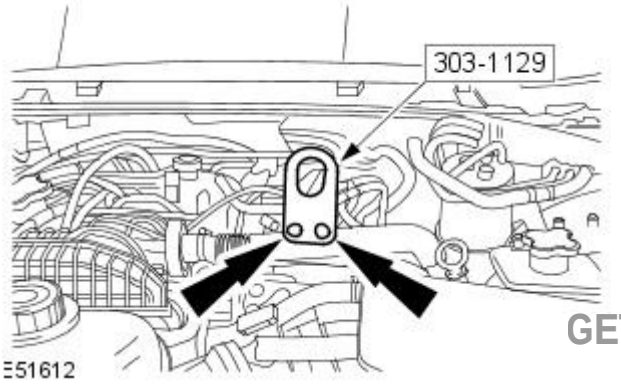


GETtheMANUALS.org

**20.** Remove the cowl panel grille.
For additional information, refer to: Cowl Panel Grille (501-02 Front End Body Panels, Removal and Installation).

**21.** Remove the engine compartment support.

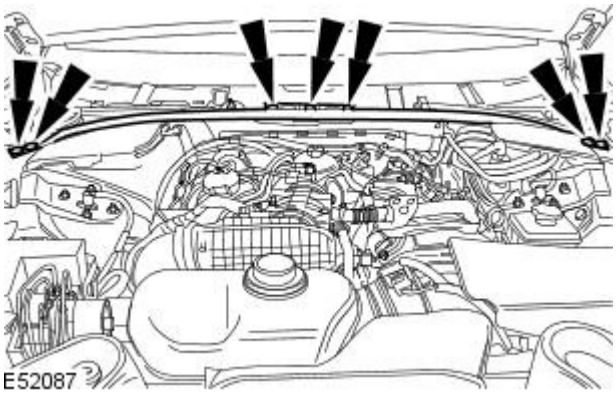


**22.** Using the special tools, raise the engine to a suitable height.

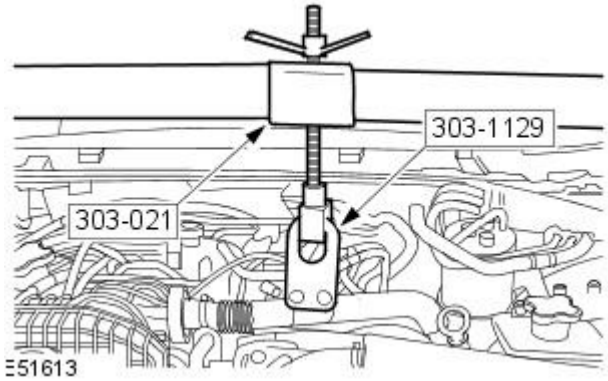


**23.** Raise the vehicle.

**24.** Remove the retaining bracket.

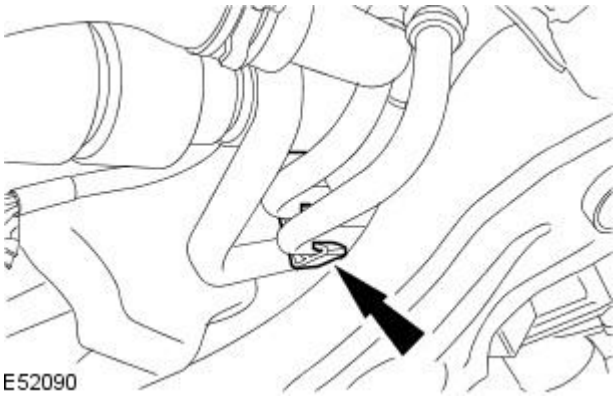


**25.** Release the transmission fluid cooler tube bracket.

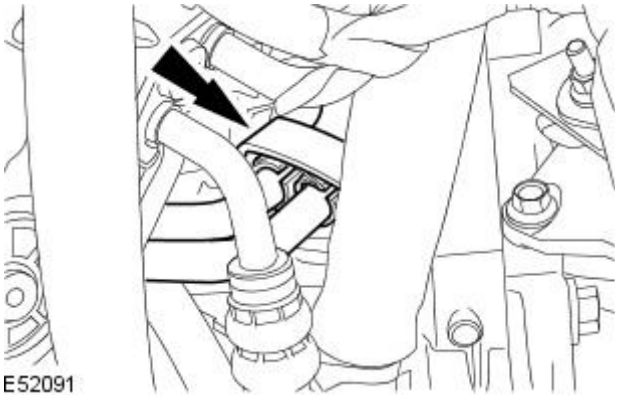


GETtheMANUALS.org

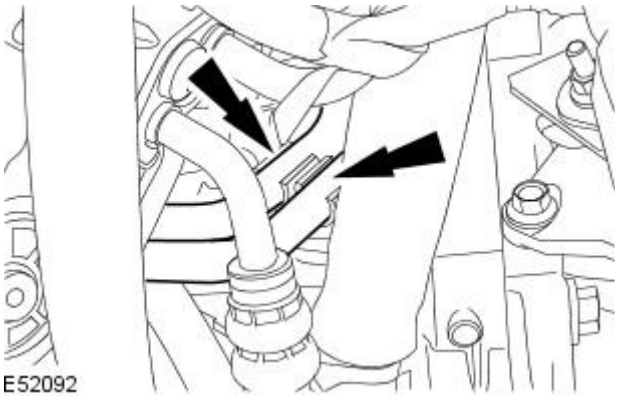


**26.** Detach the transmission fluid cooler tubes from the retaining bracket.

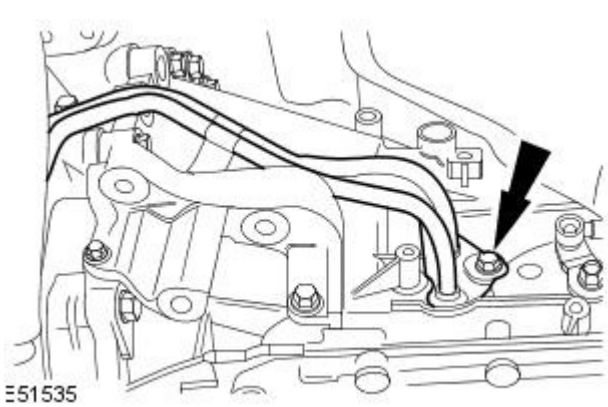


**27.** CAUTION: Make sure the transmission fluid cooler tubes are not removed from the automatic transmission by using a pry bar. Failure to follow this instruction may result in damage to the vehicle.

• NOTE: Catalyst shown removed for clarity.

Remove the transmission fluid cooler tubes from the automatic transmission.

- Allow the transmission fluid to drain into a suitable container.
- Remove and discard the O-ring seals.

## Installation

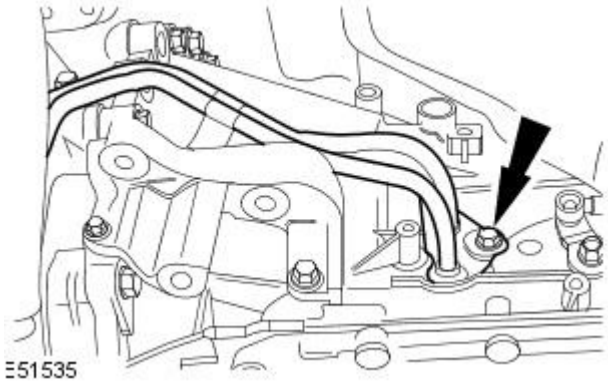


**1.** NOTE: Catalyst shown removed for clarity.

Install transmission fluid cooler tubes.

- Install new O-ring seals.
- Tighten to 23 Nm.

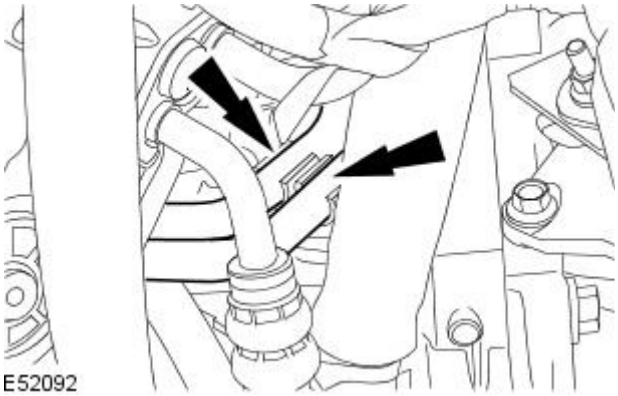


**2.** Attach the transmission fluid cooler tubes to the retaining bracket.

GETtheMANUALS.org

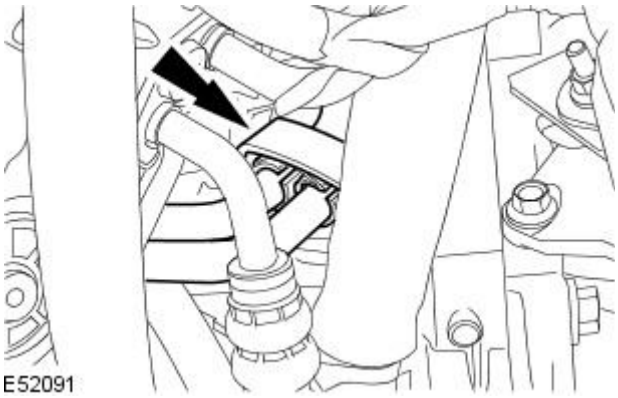


**3.** Attach the transmission fluid cooler tube bracket.

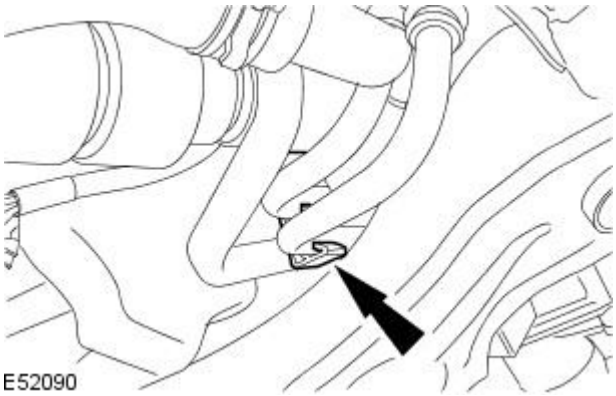


**4.** Install the retaining bracket.

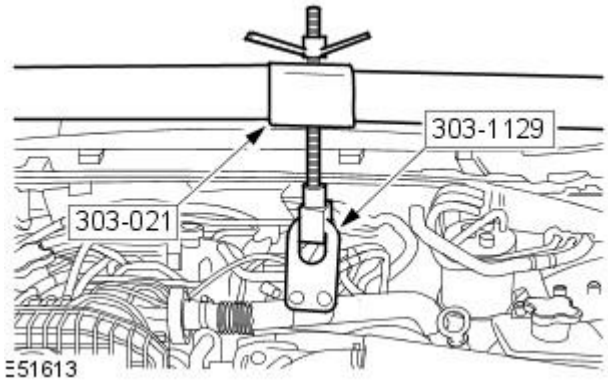


**5.** Lower the vehicle.

**6.** Remove the special tool.

- Loosen the special tool adjustment bolt.

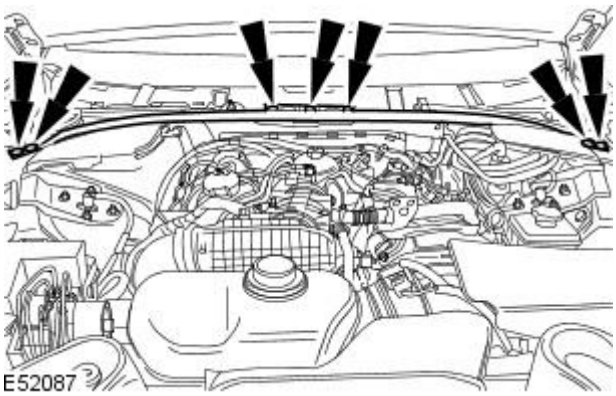


**7.** Install the engine compartment support.

**8.** Install the cowl panel grille.
For additional information, refer to: Cowl Panel Grille (501-02 Front End Body Panels, Removal and Installation).

GETtheMANUALS.org

**9.** Remove the special tool.

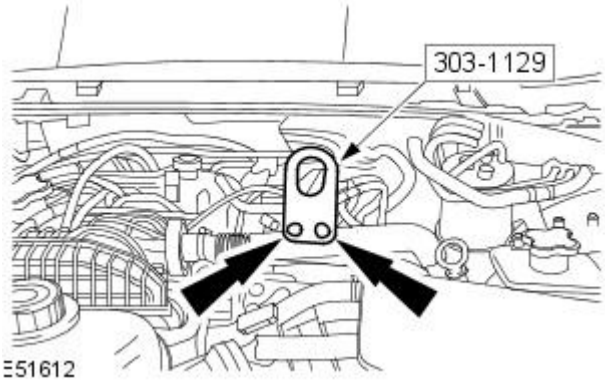


**10.** Install the engine cover.

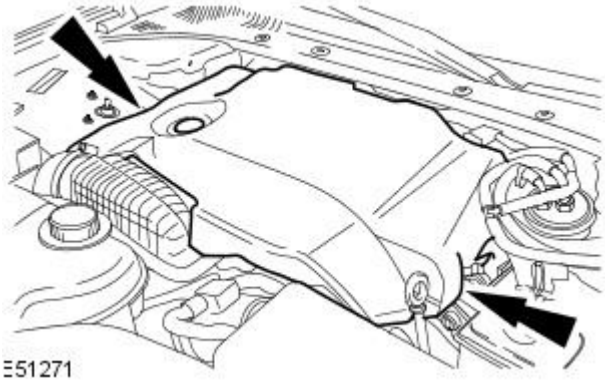


**11.** Install the filler cap.

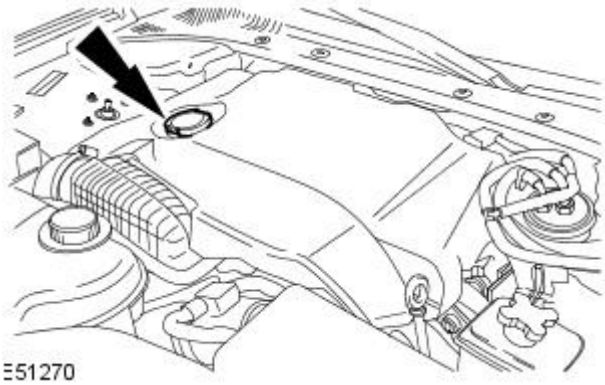


**12.** Raise the vehicle.

**13.** Install the retaining nut.

- Tighten to 63 Nm.

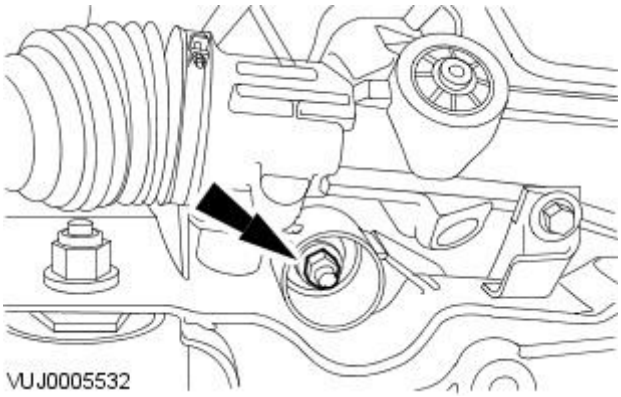


**14.** Install the retaining bracket.

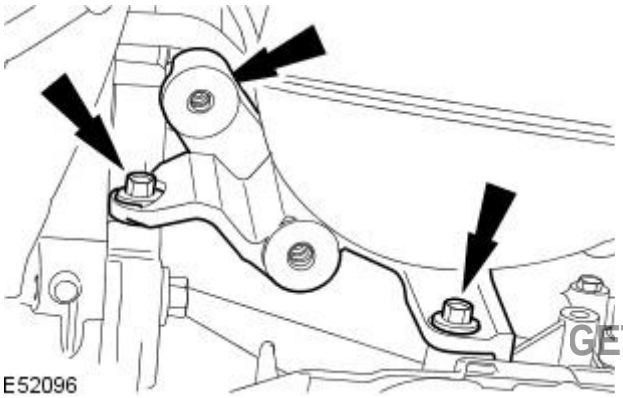


GETtheMANUALS.org

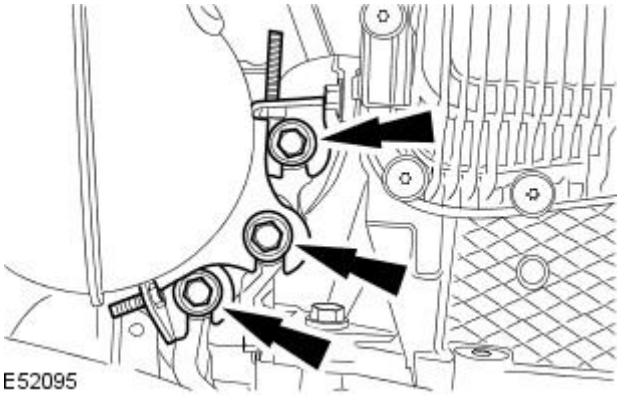


**15.** Install the catalyst heat shield retaining bracket.

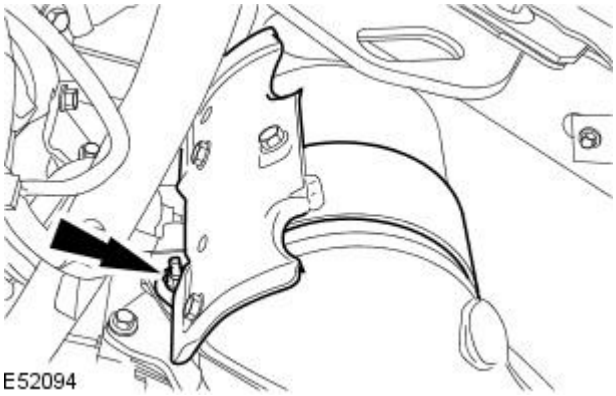


**16.** Install the catalyst heat shield.

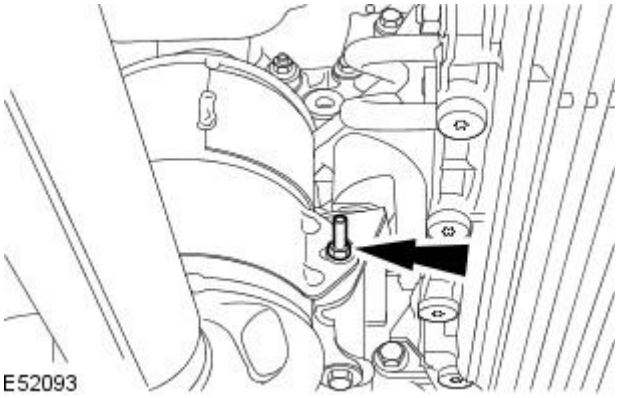


**17.** Install the retaining nut.

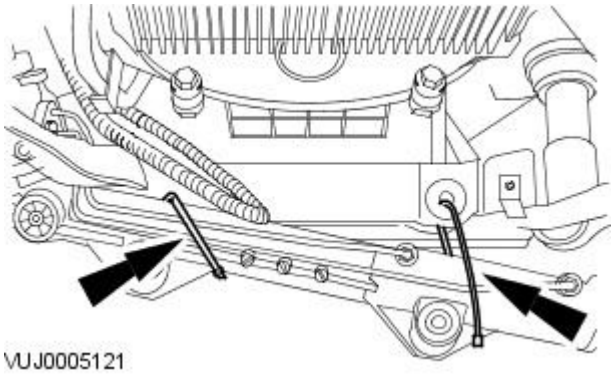


**18.** Detach the steering gear.

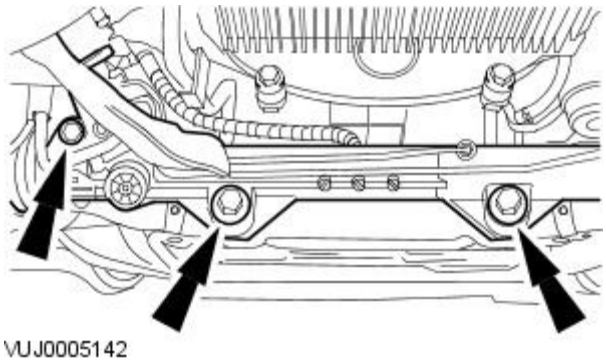


**19.** Attach the steering gear.

- Tighten to 100 Nm.

GETtheMANUALS.org

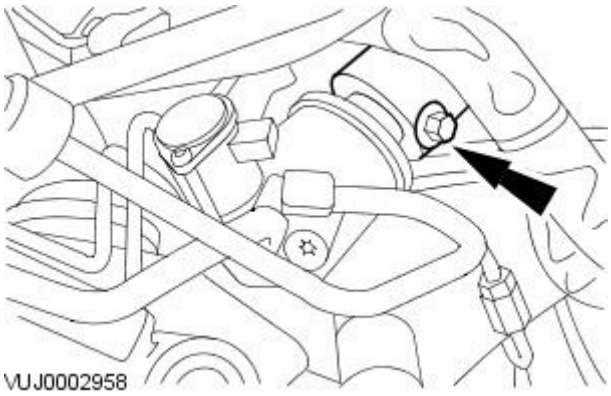


**20.** Attach the lower steering column.

- Tighten to 35 Nm.

**21.** Make sure the alignment mark on the steering gear pinion seal protection cover is central to the steering gear pinion casting.

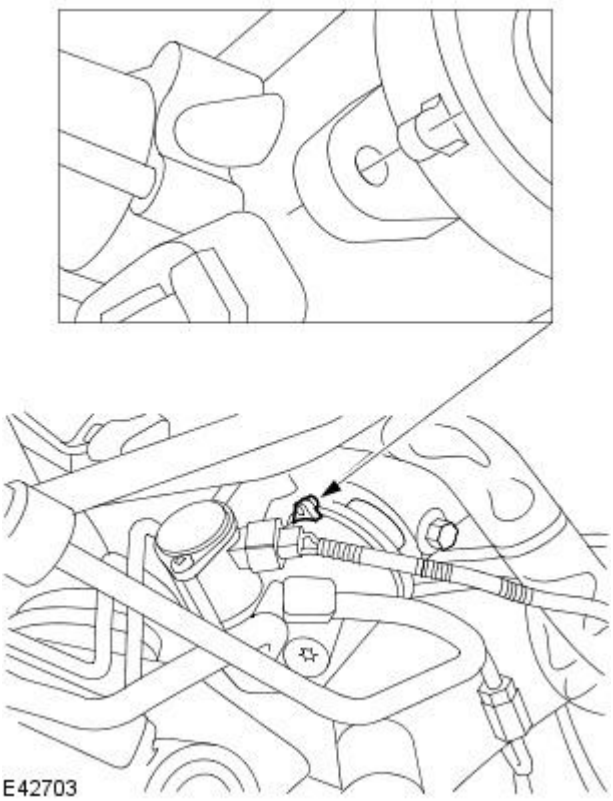


**22.** Attach the hose.

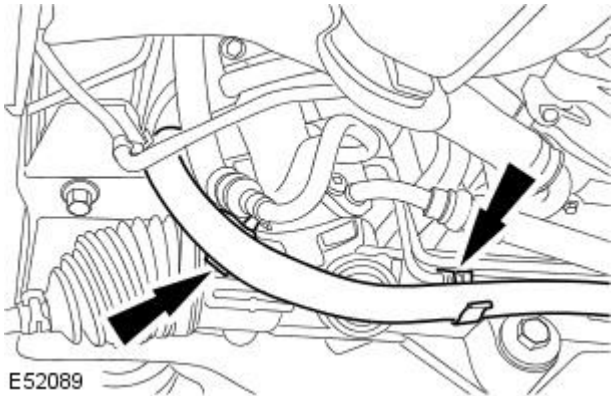


**23.** Attach the transmission fluid cooler tubes.

- Install new O-ring seals.
- Tighten to 10 Nm.

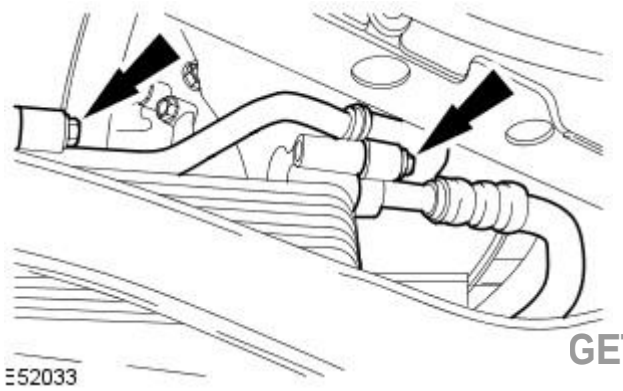


GETtheMANUALS.org

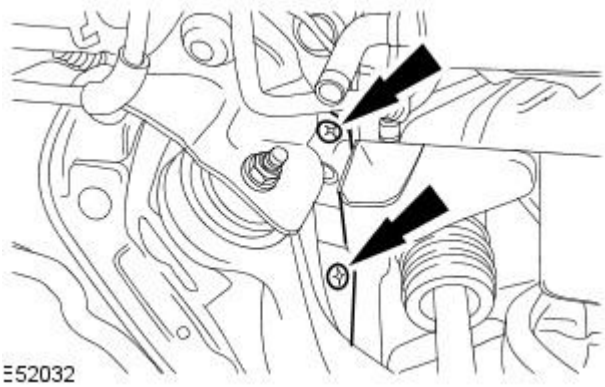


**24.** Install the splash shield.

**25.** Install the air deflector.
For additional information, refer to: Air Deflector (501-02 Front End Body Panels, Removal and Installation).

**26.** Carry out a transmission fluid level check.
For additional information, refer to: Transmission Fluid Level Check (307-01 Automatic Transmission/Transaxle, General Procedures).

GETtheMANUALS.org

# Automatic Transmission / Transaxle External Controls -

**Torque Specifications**

| Description | Nm | lb-ft | lb-in |
|---|---|---|---|
| Transmission selector lever retaining bolts | 11 | 8 | - |
| Selector lever cable bracket retaining bolts | 11 | 8 | - |

GETtheMANUALS.org

# Automatic Transmission / Transaxle External Controls - External Controls

Description and Operation

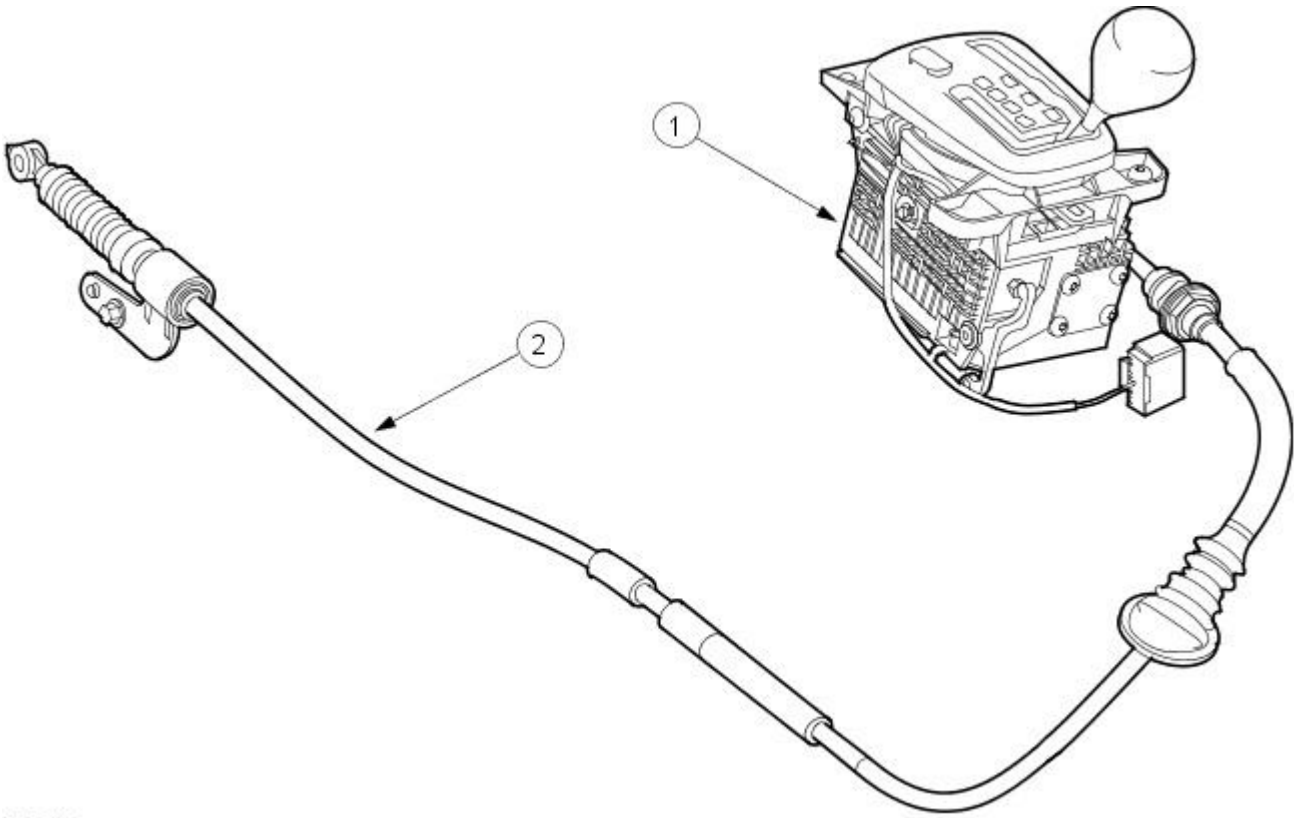


E30353

| Item | Part Number | Description |
|---|---|---|
| 1 | — | Transmission selector lever. |
| 2 | — | Selector cable and bracket. |

## Transmission selector lever

The transmission selector lever:

- Has eight positions: Park, Reverse, Neutral, Drive, Fifth, Fourth, Third and Second.
- Operates the transmission selector shaft in the Park, Reverse, Neutral, Drive positions by means of a cable.
- Communicates the transmission selector lever position to the transmission control module (TCM) using electronic code through the Controlled Area Network (CAN) bus.
- Uses "Hall Effect" switches and a micro controller inside the transmission selector lever to generate the electronic code.
- When moved to the left-hand side of the transmission selector lever, allows manual electronic selection of Fifth, Fourth, Third and Second gears.

### The transmission selector illumination:

- Is provided by the TCM by using electronic code.
- Is possible by decoding the electronic code received by the transmission selector lever from the TCM and illuminating the relevant transmission selector lever position.
- Provides a red transmission lever position illumination to indicate the selected gear.
- Provides a green background for the transmission selector lever module and is hard-wired to the front electronics module (FEM).

### The eight transmission selector positions are:

- P: The transmission is mechanically locked (starting available).
- R: Reverse gear.
- N: No power to the rear wheels (starting available).
- D: All six forward gears available.
- 5: Upshift to fifth gear only.
- 4: Upshift to fourth gear only.
- 3: Upshift to third gear only.
- 2: Upshift to second gear only.

## Sport mode switch

The sport mode switch:

- Allows the driver to select or de-select the automatic transmission sport mode.
- Allows the automatic transmission to operate normally when the sport mode is selected, but under acceleration the gear shift points are extended to make full use of the engine's power reserves.
- Allows the driver to drive the vehicle in the "D" position with the full automatic transmission shift or manually shift gears in the "second, third, fourth and fifth" positions.
- Is illuminated when Sport mode is selected.
- Communicates with the TCM through the CAN network to show the sport mode switch status.

## Transmission unit gear selector

GETtheMANUALS.org

The gear selector at the transmission unit:

- Is connected to the transmission selector lever module by a selector cable.
- Operates the manual selector valve, which is part of the electro-hydraulic control unit.

## Transmission selector lever interlock solenoid

### Transmission selector lever interlock solenoid:

- Prevents the transmission selector lever from being moved from the Park position, unless the ignition switch is in the "ON" position and the brake pedal is applied.
- Is controlled by an input from the brake pedal switch through the CAN bus.

### Transmission selector lever interlock solenoid operation

When the driver first enters the vehicle and turns the ignition switch to the "ON" position, the transmission selector lever position indicator "P" will flash. If the driver then applies the brake pedal while the transmission selector lever position indicator "P" is flashing, the driver will then be able to move the transmission selector lever out of the "P" position.

Once the transmission selector lever has been moved out of the "P" position, the transmission selector lever interlock solenoid will de-energise after 5 seconds. If the transmission selector lever is moved back into the "P" position before the 5 seconds have elapsed, the transmission selector lever interlock solenoid will de-energise as soon as the transmission selector lever detects it is in the "P" position.

If the transmission selector lever is moved into a gear selection position for longer than 5 seconds and then returned to the "P" position whilst the brake pedal is applied. The transmission selector lever interlock solenoid will remain de-energised and the transmission selector lever position indicator "P" will flash. The driver must release and re-apply the brake pedal to allow the transmission selector lever to be moved from the "P" position.

If the driver runs the vehicle for a short period of time, with the brake pedal applied and then turns the vehicle off without moving the transmission selector lever out of the "P" position. The driver will not be able to remove the key from the ignition switch, until the brake pedal has been released.

GETtheMANUALS.org

# Automatic Transmission / Transaxle External Controls - External Controls

Diagnosis and Testing

1. **1.** Verify the customer concern.
2. **2.** Visually inspect for obvious signs of mechanical or electrical damage.

WARNING: Danger of accident. Apply the parking brake. Shift the gear selector lever to "P". Failure to follow these instructions may result in personal injury.

**Visual Inspection Chart**

| Mechanical | Electrical |
|---|---|
| • Visibly damaged or worn parts.<br>• Loose or missing nuts or bolts. | • Fuse(s).<br>• Loose or corroded electrical connector(s). |

3. **3.** If an obvious cause for an observed or reported concern is found, correct the cause (if possible) before proceeding to the next step.
4. **4.** If the cause is not visually evident, verify the symptom and refer to the Jaguar Approved Diagnostic System.

## Pinpoint Tests

| PINPOINT TEST A : J-GATE SYSTEM CIRCUIT CHECKS | |
|---|---|
| **TEST CONDITIONS** | **DETAILS / RESULTS / ACTIONS** |
| **A1: CHECK FOR IGNITION FEED TO THE J-GATE** | |
| | 1 Disconnect the J-gate assembly electrical connector CA245. |
| | 2 Turn the ignition to the "ON" position. |
| | 3 Measure the voltage at CA245 Pin 1 (GO). |
| | Is the voltage greater than 10 Volts?<br>**Yes**<br>GO to A2.<br>**No**<br>Repair the electrical circuit between the J-gate assembly electrical connector CA245 Pin 1 (GO) and the rear power distribution box FUSE 3. Clear the DTC. TEST the system for normal operation.<br>( NOTE: This circuit incorporates the ignition switch and the primary junction box. For additional information, refer to the vehicle wiring diagrams.) |
| **A2: CHECK THE GROUND SUPPLY TO THE J-GATE** | |
| | 1 Measure the resistance between the J-gate assembly electrical connector CA245 Pin 2 (B) and GROUND. |
| | Is the resistance less than 5.0 Ohms?<br>**Yes**<br>GO to A3.<br>**No**<br>Repair the circuit between the J-gate assembly electrical connector CA245 Pin 2 (B) and GROUND. Clear the DTC. TEST the system for normal operation. |
| **A3: CHECK FOR J-GATE ILLUMINATION FEED** | |
| | 1 Turn the ignition to the "ON" position. |
| | 2 Measure the voltage at CA245 Pin 3 (UY). |
| | Is the voltage greater than 10 Volts?<br>**Yes**<br>GO to A4.<br>**No**<br>Repair the electrical circuit between the J-gate assembly electrical connector CA245 Pin 3 (UY) and the front electronics module electrical connector. For additional information, refer to the vehicle wiring diagrams. Clear the DTC. TEST the system for normal operation. |
| **A4: CHECK FOR KEY INTERLOCK FEED CIRCUIT FOR CONTINUITY** | |
| | 1 Disconnect the J-gate assembly electrical connector CA245. |
| | 2 Disconnect the ignition switch electrical connector FC018. |
| | 3 3) Measure the resistance between the J-gate assembly electrical connector CA245 Pin 4 (Y) and the ignition switch electrical connector FC018 Pin 3 (Y). |
| | Is the resistance less than 5.0 Ohms?<br>**Yes**<br>GO to A5.<br>**No**<br>Repair the electrical circuit between the J-gate assembly electrical connector CA245 Pin 4 (Y) and the ignition switch electrical connector FC018 Pin 3 (Y). Clear the DTC. TEST the system for normal operation. |
| **A5: CHECK FOR KEY INTERLOCK ACTION** | |
| | 1 Check for continuity between Pin 3 and Pin 4 of the ignition switch lock cylinder. |
| | Is the circuit continuous?<br>**Yes**<br>Install a new J-gate. For additional information,<br>REFER to Transmission Selector Lever in this section.<br>Clear the DTC. TEST the system for normal operation.<br>**No**<br>Install a new ignition switch lock cylinder. For additional information,<br>REFER to Section 211-04 Steering Column.<br>Clear the DTC. TEST the system for normal operation. |

GETtheMANUALS.org

# Automatic Transmission / Transaxle External Controls - Selector Lever Cable Adjustment

General Procedures

1. Remove the floor console.
   For additional information, refer to Section 501-12 Instrument Panel and Console.
2. Move the transmission selector lever to the "R" position.
3. Loosen the selector lever cable retaining nuts.

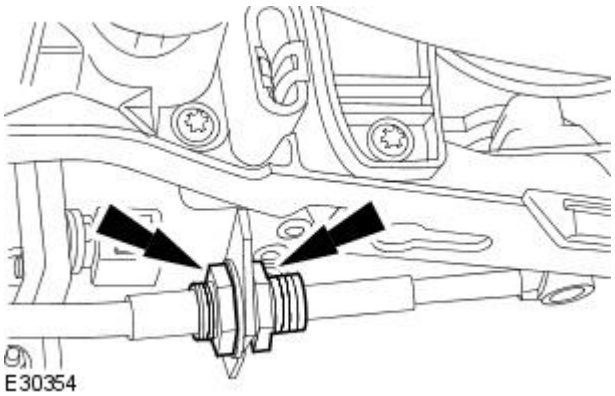


4. Detach the selector lever cable.

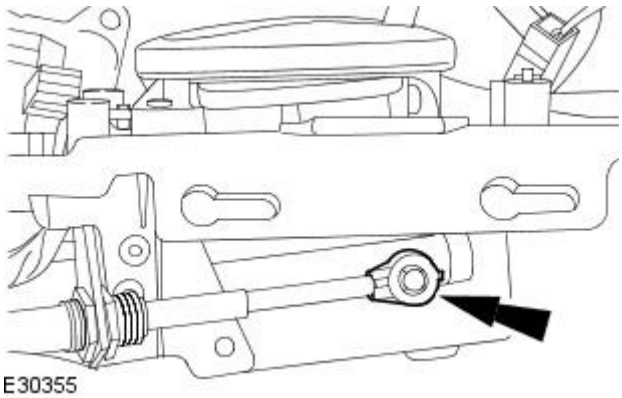


5. NOTE: Fully extend the selector cable, then retract the selector cable one detent.

   Make sure the selector lever cable is in the "R" position.
6. Make sure the transmission selector lever is in the "R" position.
7. Connect the selector lever cable.

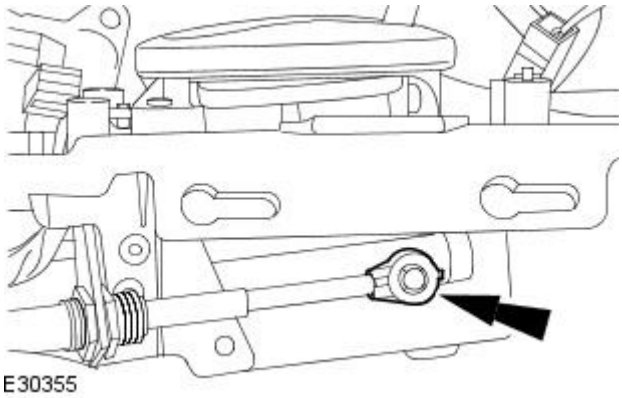


8. Adjust the selector lever cable retaining nuts to lock against the retaining bracket without moving the set position of either the shift lever or the selector lever cable.

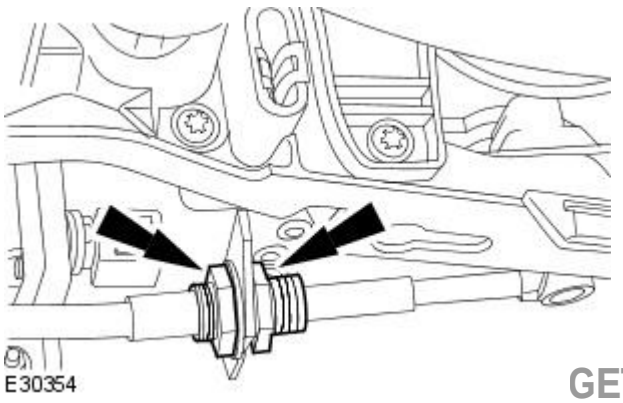


GETtheMANUALS.org

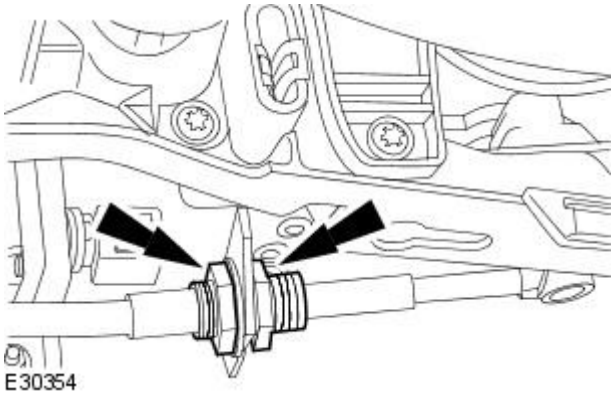


**9.** NOTE: Make sure all transmission selector lever positions select the relevant automatic transmission states.

Move the transmission selector lever to all positions.

**10.** NOTE: When tightening the selector lever cable retaining nuts, make sure both retaining nuts are tightened to the specified torque simultaneously.

Tighten the selector lever cable retaining nuts.

- Tighten to 20 Nm.

**11.** Install the floor console.
For additional information, refer to Section 501-12 Instrument Panel and Console.

GETtheMANUALS.org

# Automatic Transmission / Transaxle External Controls - Selector Lever Cable and Bracket

Removal and Installation

## Removal

All vehicles

1. Remove the floor console.
   For additional information, refer to: Floor Console (501-12 Instrument Panel and Console, Removal and Installation).
2. Move the transmission selector lever to the “R” position.
3. Detach the selector lever cable.
   - Loosen the selector lever cable retaining nuts.

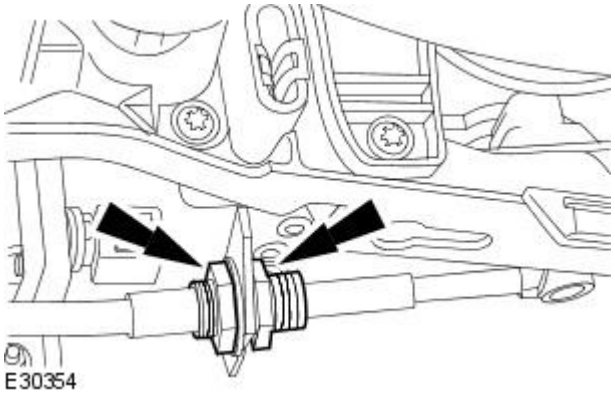


4. Detach the selector lever cable.

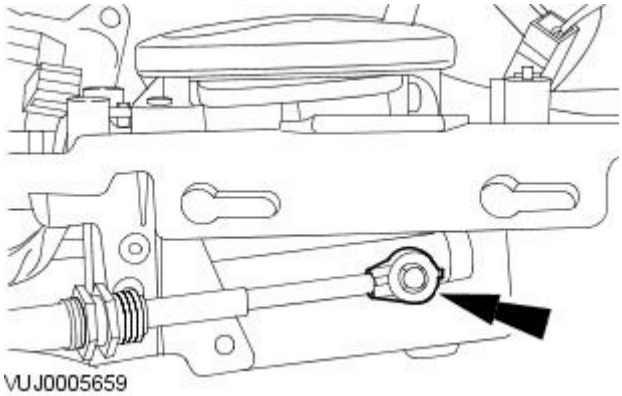


5. Detach the selector lever cable.

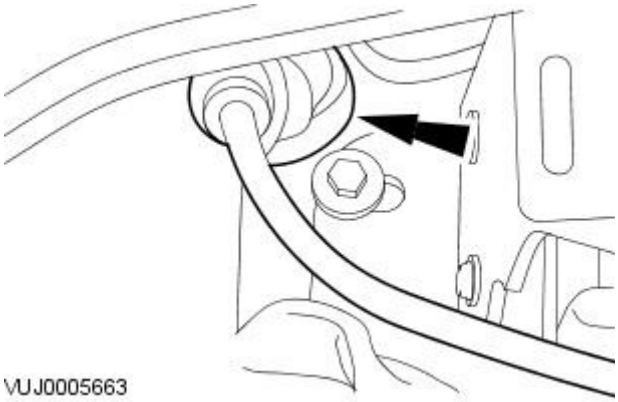


6. Raise and support the vehicle.
   For additional information, refer to: Lifting (100-02 Jacking and Lifting, Description and Operation).

Vehicles with diesel engine

GETtheMANUALS.org

**7.** Remove the transmission undertray.

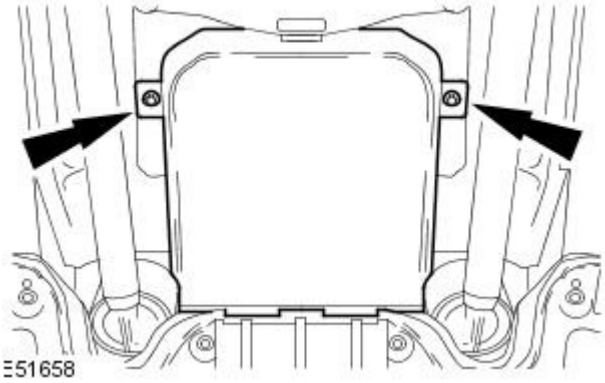


All vehicles

**8.** Detach the selector lever cable.

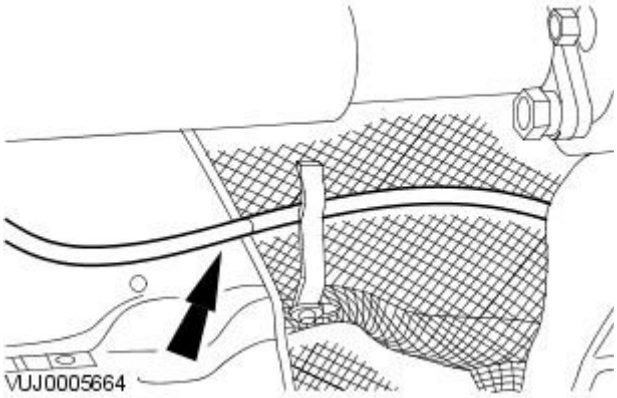


**9.** Detach the selector lever cable.

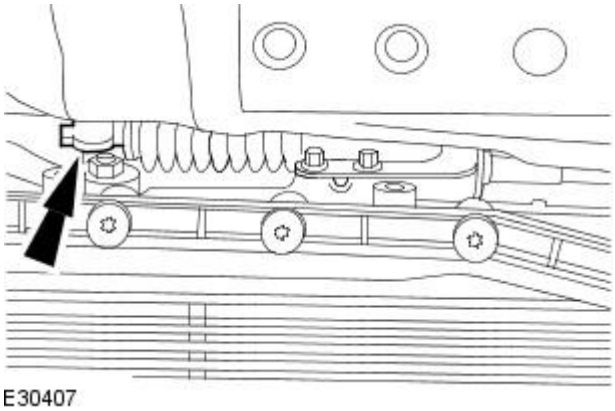


**10.** Remove the selector lever cable.

- Remove the retaining bolts.

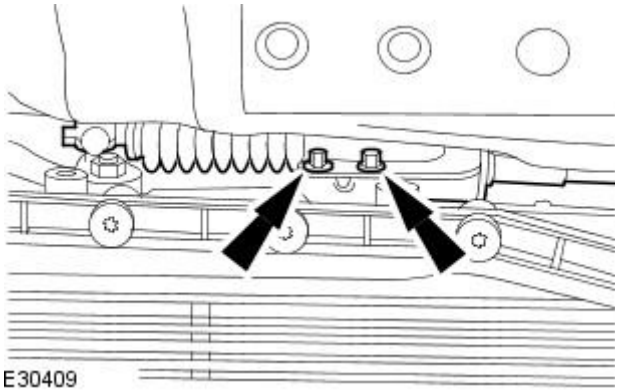


## Installation

All vehicles

GETtheMANUALS.org

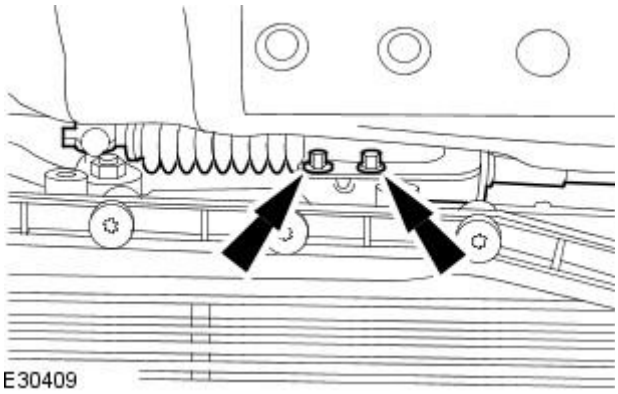


**1.** Install the selector lever cable.

- Tighten to 11 Nm.

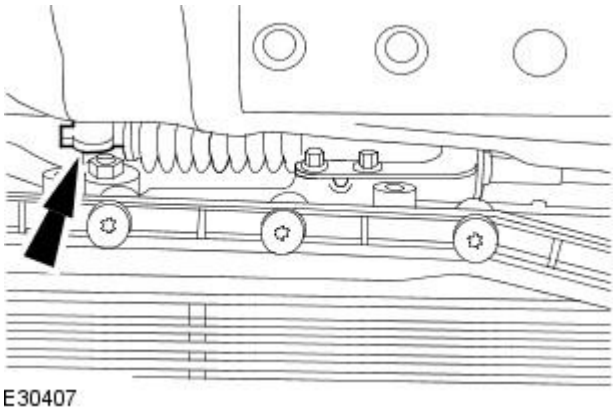


**2.** NOTE: Make sure the selector lever cable is fully seated to the transmission unit gear selector pivot ball.

Attach the selector lever cable.

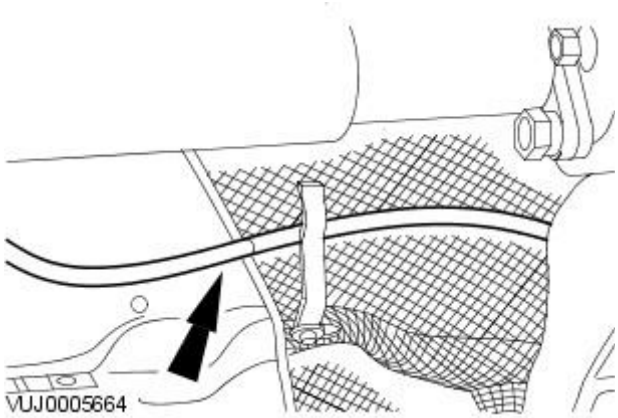


**3.** Attach the selector lever cable.

Vehicles with diesel engine

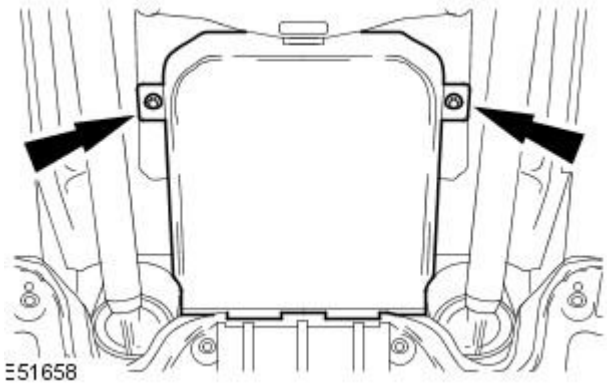


**4.** Install the transmission undertray.

All vehicles

**5.** Lower the vehicle.

GETtheMANUALS.org

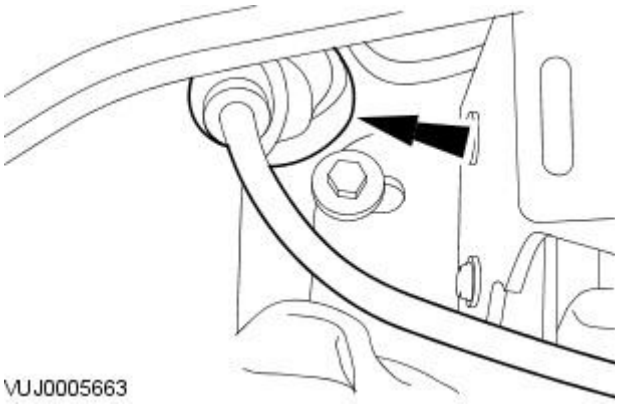


**6.** NOTE: Make sure the selector lever cable grommet is seated correctly.

Attach the selector lever cable.

**7.** NOTE: Fully extend the selector cable, then retract the selector cable one detent.

Make sure the selector lever cable is in the “R” position.

**8.** Make sure the transmission selector lever is in the “R” position.

**9.** Attach the selector lever cable.

- Do not tighten the selector lever cable retaining nuts.

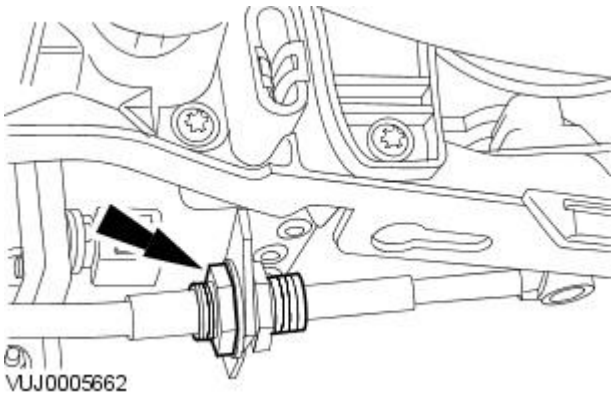


**10.** Connect the selector lever cable.

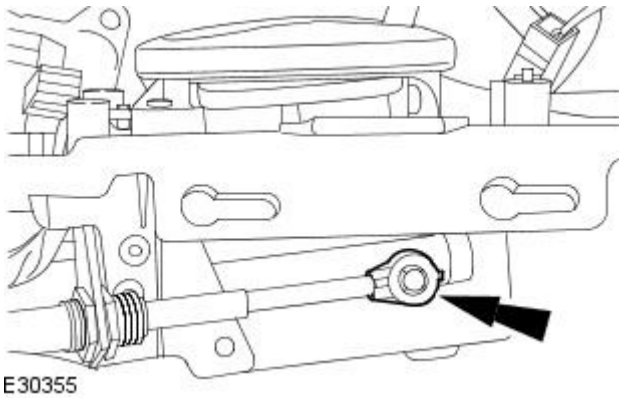


**11.** Adjust the selector lever cable retaining nuts to lock against the retaining bracket without moving the set position of either the shift lever or the selector lever cable.

- Do not tighten the selector lever cable retaining nuts.

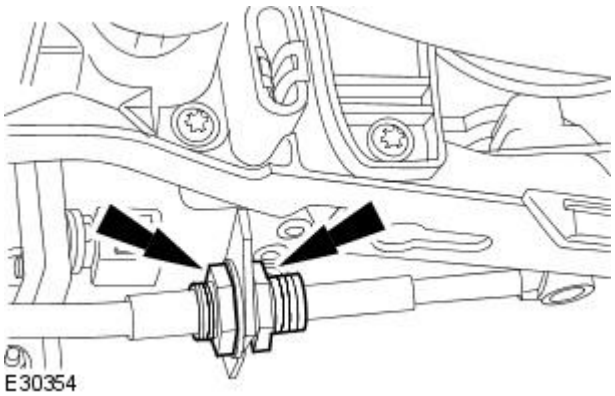


**12.** NOTE: Make sure all transmission selector lever positions are illuminated to indicate the selected gear and the automatic transmission selects the relevant transmission state.

• NOTE: Repeat the adjustment of the selector lever cable retaining nuts if the transmission selector lever does not illuminate the indicated selected gear and the automatic transmission does not select the relevant transmission state.

Move the transmission selector lever to all positions.

GETtheMANUALS.org

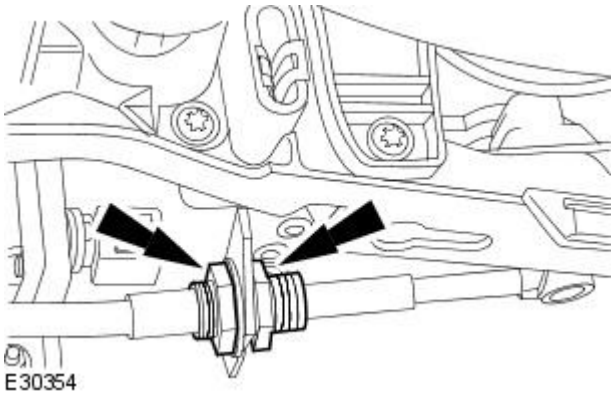


**13.** NOTE: When tightening the selector lever cable retaining nuts, make sure both retaining nuts are tightened to the specified torque simultaneously.

Tighten the selector lever cable retaining nuts.

- Tighten to 20 Nm.

**14.** NOTE: Make sure all transmission selector lever positions are illuminated to indicate the selected gear and the automatic transmission selects the relevant transmission state.

• NOTE: Repeat the adjustment of the selector lever cable retaining nuts if the transmission selector lever does not illuminate the indicated selected gear and the automatic transmission does not select the relevant transmission state.

Move the transmission selector lever to all positions.

**15.** Install the floor console.
For additional information, refer to: Floor Console (501-12 Instrument Panel and Console, Removal and Installation).

GETtheMANUALS.org

# Automatic Transmission / Transaxle External Controls - Selector Lever Assembly

Removal and Installation

## Removal

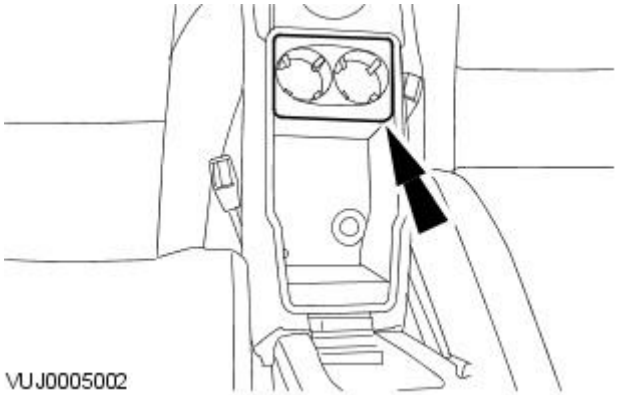


1. Position the transmission selector lever into NEUTRAL.
2. Remove the floor console cup holder.

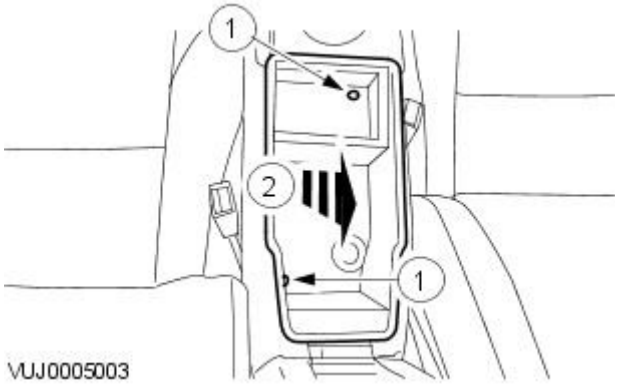


3. Remove the floor console stowage compartment.
   - Remove the 2 screws.
   - Disconnect the electrical connector.

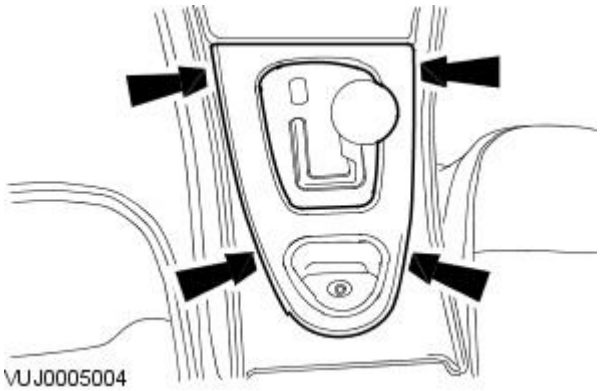


4. Remove the gearshift lever selector trim panel.

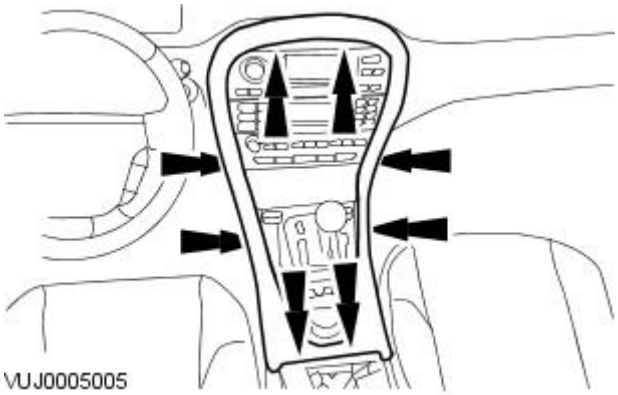


5. Remove the instrument panel console bezel.
   - Release from the 8 clips.

GETtheMANUALS.org

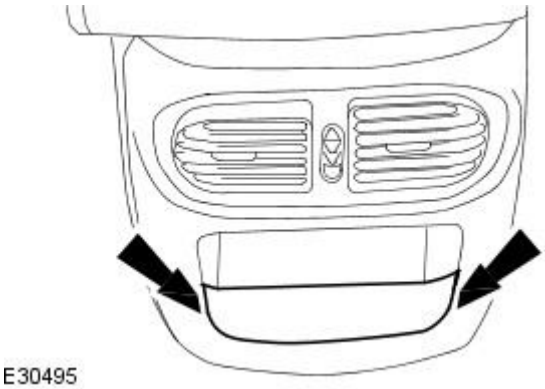


**6.** Remove the floor console rear stowage compartment.

- Release from the 2 clips.

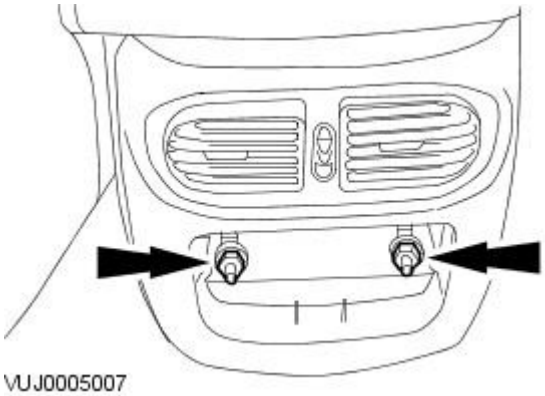


**7.** Release the floor console.

- Remove the 2 nuts.

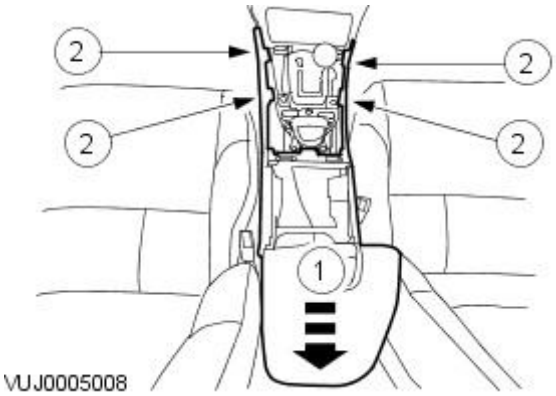


**8.** Remove the floor console.

- Slide the floor console rearward.
- Release from the 4 clips.

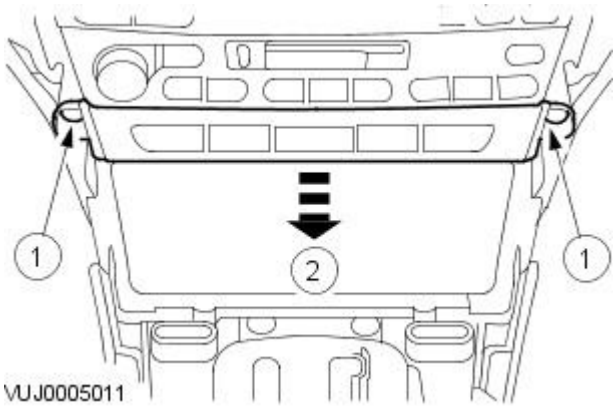


**9.** Release the instrument panel switch pack.

- Remove the 2 Torx bolts.
- Position aside.

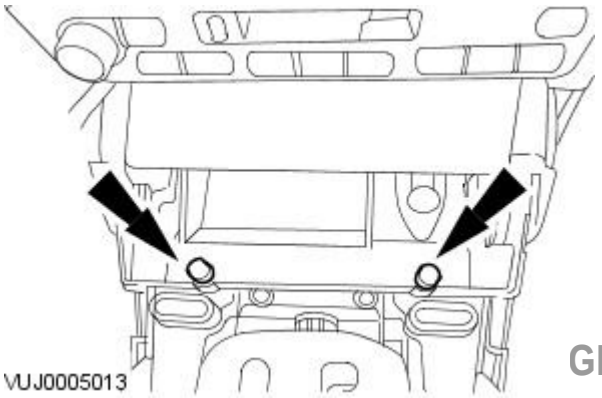


**10.** Remove the ashtray retaining screw covers.

GETtheMANUALS.org

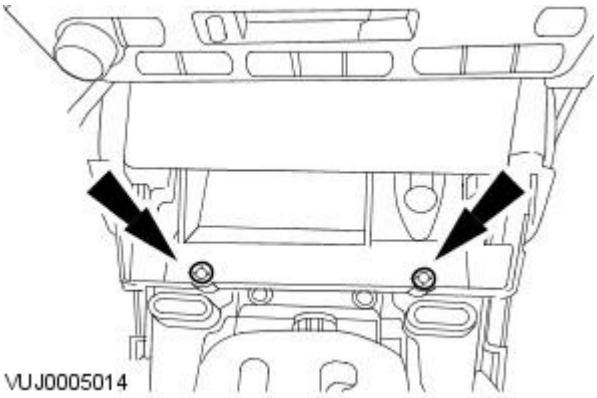


**11.** Remove the ashtray retaining screws.

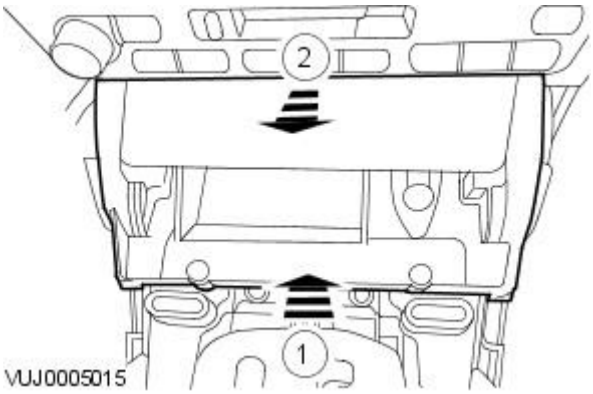


**12.** Release the ashtray.

- Release the ashtray from retaining tangs.
- Detach the ashtray.

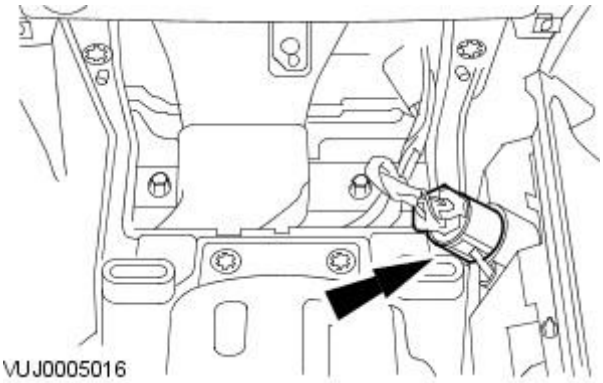


**13.** Remove the ashtray.

- Disconnect the electrical connector.

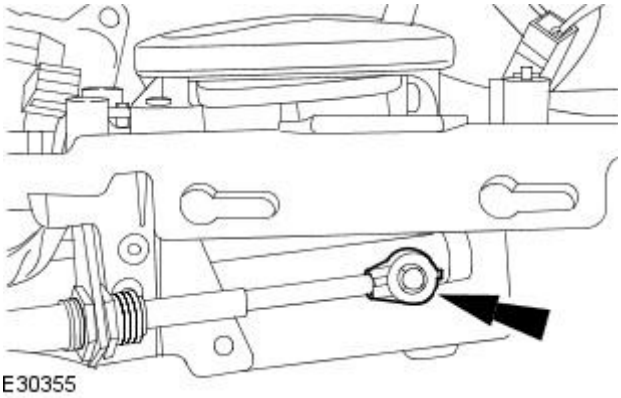


**14.** Disconnect the selector lever cable.

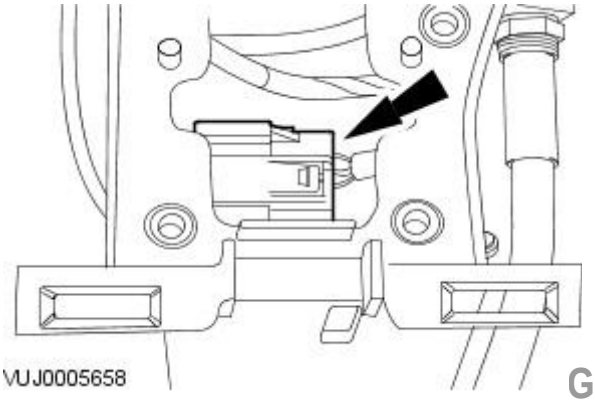


**15.** Release the transmission selector lever.

- Disconnect the electrical connector.

GETtheMANUALS.org

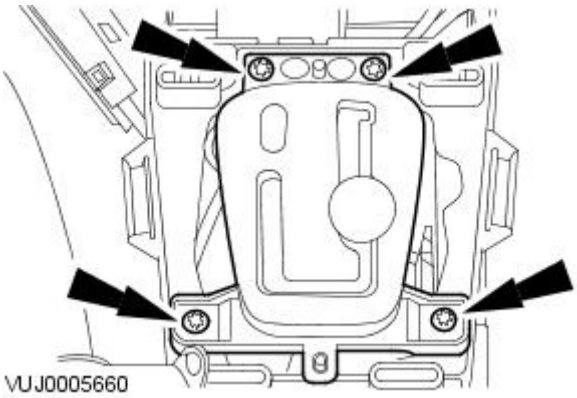


**16.** Remove the transmission selector lever.

- Remove the 4 bolts.

## Installation

**1.** To install, reverse the removal procedure.

**2.** Tighten the Torx bolts to 11 Nm.

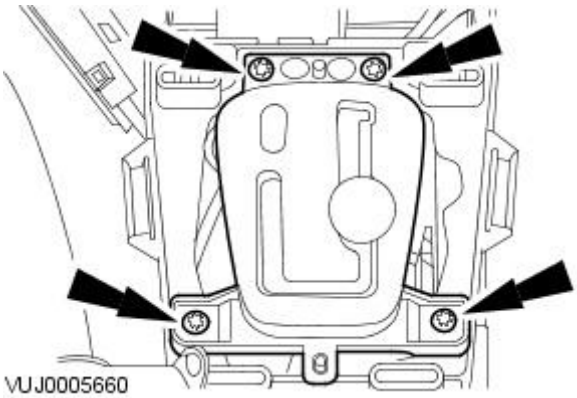


GETtheMANUALS.org

# Manual Transmission / Transaxle and Clutch - General Information -

**Lubricants, Fluids, Sealers and Adhesives**

| Item | Specification |
|---|---|
| Brake fluid | ITT Super Dot 4 |

GETtheMANUALS.org

Published: 11-May-2011

# Manual Transmission / Transaxle and Clutch - General Information - Manual Transmission and Clutch

Description and Operation

The clutch system consists of the following components:

- A flywheel
- A clutch disc
- A clutch pressure plate
- A clutch master cylinder
- A clutch slave cylinder
- A clutch release hub and bearing

The clutch master cylinder transmits fluid pressure to the slave cylinder, which in turn moves the clutch release hub and bearing.

The clutch master cylinder uses brake fluid and shares a common reservoir with the brake master cylinder.

The clutch is a single plate, dry-friction disc with a diaphragm-style spring clutch pressure plate. The clutch disc has a hub which is splined to the input shaft. The clutch disc has friction material where it contacts the flywheel and the pressure plate. The clutch pressure plate applies pressure to the clutch disc, holding it tightly against the surface of the flywheel.

In the engaged position, the diaphragm spring holds the clutch pressure plate against the clutch disc, so that engine torque is transmitted to the input shaft. When the clutch pedal is depressed, the clutch release hub and bearing pushes the diaphragm spring center toward the flywheel. The diaphragm spring pivots at the fulcrum, relieving the load on the clutch pressure plate. Steel spring straps riveted to the clutch pressure plate cover pull the clutch pressure plate from the clutch disc, disengaging the engine torque from the transmission and enabling the gears to be changed.

GETtheMANUALS.org

# Manual Transmission / Transaxle and Clutch - General Information - Manual Transmission and Clutch

Diagnosis and Testing

## Inspection and Verification -Clutch

As fault diagnosis starts when repairs are taken on, the following procedure is recommended:

1. **1.** Verify the customer concern by operating the system.
2. **2.** Visually inspect for obvious signs of mechanical damage.

**Visual Inspection Chart**

| Mechanical | Electrical |
|---|---|
| ● Transmission oil leak<br>● Missing screws or nuts | ●<br>● |

3. **3.** If an obvious cause for an observed or reported concern is found, correct the cause (if possible) before proceeding to the next step.
4. **4.** If the concern is not visually evident, verify the symptom and refer to the Symptom Chart.

## Inspection and Verification - Manual Transmission

The following checks should be carried out before repairing or installing a new transmission:

## Transmission Noise

If transmission noises are reported, check the transmission fluid level. If damage has occurred due to a lack of fluid, install a new transmission.

## Oil Leakage

- Check that the leaking fluid is actually transmission fluid and not hydraulic fluid (from the hydraulically operated clutch) or engine oil.
- Check the transmission fluid level and, as necessary, drain off any excess fluid.
- Clean the transmission and the adjacent areas carefully before the road test.

## Symptom Chart - Poor gear shifting

**Symptom Chart**

| Symptom | Possible Sources | Action |
|---|---|---|
| Significant effort required when downshifting or synchronizer crashing | * Gear synchronization is inadequate. | * Check oil level.<br>* Check gear linkage.<br>* INSTALL a new transmission. |
| Gear jumps out of engagement while driving | * Worn or broken synchronizer components.<br>* Manufacturing error (incorrect gear wheel toothing or synchronizer ring). | * INSTALL a new transmission. |
| Gearshift problems in different gears (stiff or partially seized) | * Gear linkage. | * Check oil level.<br>* Check gear linkage.<br>* INSTALL a new transmission. |
| Brief scratching noise during gear shifting | * Inadequate gear synchronization. | * Check oil level.<br>* Check gear linkage.<br>* INSTALL a new transmission. |

## Symptom Chart - Oil leakage

**Symptom Chart**

| Symptom | Possible Sources | Action |
|---|---|---|
| Leak from transmission housing | * Leak from breather. | * CHECK oil level. |
| | * Leak from fill plug. | * TIGHTEN fill plug. |
| | * Leak from drain plug. | * TIGHTEN drain plug. |
| | * Sealing lip of the output shaft oil seal damaged. | * INSTALL a new output shaft seal and drive flange if seal is damaged. |
| | * Oil leaking from the selector shaft oil seal. | * INSTALL a new selector shaft seal. |
| | * Leak from crankshaft rear seal. | * INSTALL a new crankshaft seal. |
| | * Leak from clutch hydraulics. | * For additional information, refer to Pinpoint Test H. |
| | * Sealing lip on input shaft damaged. | * INSTALL a new input shaft seal. |

## Symptom Chart - General Concerns

**Symptom Chart**

| Symptom | Possible Sources | Action |
|---|---|---|
| Clicking noises in reverse gear | * Gear wheels. | * RUN the vehicle on wheel free ramp to establish that the noise is coming from the transmission. If the noise is coming from the transmission INSTALL a new transmission. |
| Gear wheels banging when shifting | * Damaged clutch. | * CHECK the clutch is clearing correctly.<br>- No-For additional information, refer to Pinpoint Test A.<br>- Yes-CHECK transmission oil level. If transmission level is okay INSTALL a new transmission. |
| | * Selector forks or synchronizer rings. | * INSTALL a new transmission. |
| Noises in the forward | * Transmission fluid level low | * FILL the transmission with correct amount of fluid. |

GETtheMANUALS.org

| | | |
|---|---|---|
| gears | * The engine/transmission assembly is in contact with the chassis/body. | * INSPECT for points of contact or damaged engine/transmission isolator, support insulator. |
| | * Engine/transmission flange bolts. | * TIGHTEN the transmission flange bolts. For additional information, refer to 308-03. |
| | * Input and output shaft bearings. | * INSTALL a new transmission. |
| Gears jump out of engagement | * Engine/transmission support insulator.<br>* Internal components. | * REPAIR or INSTALL new components as necessary.<br>* INSTALL a new transmission. |
| One of the gears cannot be selected | * Gearshift linkage malfunction. | * CHECK gearshift linkage correctly attached to transmission case, sector arm and the rear mounted to body.<br>- CHECK gearshift linkage functions correctly. |
| | * Transmission internal selection problem. | * INSTALL a new transmission. |
| Gears jumps out of engagement | * Gearshift linkage fault.<br>* Internal selector mechanism loose.<br>* Synchronizer fault. | * CHECK gearshift linkage for correct function.<br>* INSTALL a new transmission.<br>* INSTALL a new transmission. |
| Clattering, or rattling noises | * Gearshift mechanism foul to body. | * Make sure that the gearshift mechanism is correctly located onto the gearbox.<br>- Make sure that there are no components fouling the gearshift linkage. |
| | * Gearshift lever joint. | * CHECK free play in bearing between the lever and support housing, and between the lever and shift arm. |
| | * Gearshift lever knob loose. | * TIGHTEN the gearshift lever knob or, INSTALL a new knob as necessary. |
| Gearshift linkage has excessive play | * Gear lever bearing worn.<br>* Gearshift selector rod assembly damaged or worn | * CHECK free play in bearing. INSTALL a new if necessary.<br>* INSTALL a new gearshift selector rod assembly |
| Gearshift linkage does not operate freely | * Excessive friction in lever bearing.<br>* Gearshift selector rod assembly damaged or worn<br>* Possible fault in transmission | * INSTALL a new lever bearing.<br>* INSTALL new gearshift selector rod assembly<br>* INSTALL new transmission. |

## Symptom Chart - Clutch

**Symptom Chart**

| Symptom | Possible Sources | Action |
|---|---|---|
| Clutch slippage | * Clutch pedal free play.<br>* Sticking clutch pedal.<br>* Diaphragm springs.<br>* Clutch pressure plate.<br>* Clutch disc facing.<br>* Hardened or oiled clutch disc facing surface.<br>* Flywheel. | * GO to Pinpoint Test A. |
| | * Excessive temperature. | * ALLOW the clutch to fully cool. |
| | * Slave cylinder sticking. | * CHECK slave cylinder travels freely over its complete travel. |
| | * Adjuster ring at fully worn position. | * INSTALL a new clutch drive plate. |
| Clutch chatter or shudder | * Engine mounts.<br>* Oil on clutch disc facing.<br>* Diaphragm springs.<br>* Clutch pressure plate.<br>* Clutch disc facing.<br>* Flywheel. | * GO to Pinpoint Test B. |
| Clutch drag | * Insufficient brake fluid.<br>* Air in hydraulic system.<br>* Clutch pedal free play.<br>* Diaphragm springs.<br>* Clutch disc.<br>* Clutch disc splines.<br>* Oil on clutch disc facing. | * GO to Pinpoint Test C. |
| | * Insufficient clutch pedal travel. | * Make sure the clutch pedal has its full range of travel.<br>* Make sure the clutch pedal returns to the fully released position and the reservoir is full. |
| Clutch pedal pulsation | * Clutch and brake pedal pivot shaft not correctly lubricated.<br>* Flywheel.<br>* Damaged springs in pressure plate. | * GO to Pinpoint Test E. |
| | * Release bearing noisy or worn. | * INSTALL a new release bearing. |
| | * Cover assembly. | * CHECK run out of clutch cover. INSTALL a new clutch cover. |
| Clutch pedal related vibrations | * Engine component grounding against frame.<br>* Accessory drive belt.<br>* Flywheel bolts.<br>* Flywheel.<br>* Imbalanced clutch pressure plate. | * GO to Pinpoint Test E. |
| Hard shifting | * Insufficient brake fluid.<br>* Clutch pedal free play.<br>* Manual transmission concern. | * GO to Pinpoint Test F. |
| Excessive noise | * Clutch pedal free play.<br>* Clutch release bearing.<br>* Poor lubrication of clutch release bearing.<br>* Pilot bearing.<br>* Excessive crankshaft end play. | * GO to Pinpoint Test G. |
| | * If the noise is heard from the transmission when the engine is started and switched off with the clutch engaged, and the noise disappears if the clutch pedal is depressed. | * INSTALL a new flywheel. |
| Fluid leakage | * Clutch master cylinder.<br>* Clutch slave cylinder.<br>* Clutch hydraulic tubes. | * GO to Pinpoint Test H. |

GETtheMANUALS.org

## PINPOINT TEST A : CLUTCH SLIPPAGE

| TEST CONDITIONS | DETAILS/RESULTS/ACTIONS |
|---|---|
| **A1: TEST CLUTCH SLIPPAGE** | |
| | 1 Lock wheels and put parking brake on . |
| | 2 Start the engine and engage 4th gear. |
| | 3 Run the engine at approximately 2000 rpm. |
| | 4 Release clutch pedal slowly. |
| | Does the engine stall when the clutch pedal is fully released?<br>**Yes**<br>Clutch OK.<br>**No**<br>GO to A2. |
| **A2: TEST CLUTCH FOR CLEARING** | |
| | 1 Start engine, fully depress the clutch pedal, partially engage reverse gear, slowly engage clutch until a grating noise is heard, depress the clutch slowly until grating stops. |
| | 2 Measure pedal travel from the pedal to the floor. |
| | Is the measurement between 25mm and 45mm?<br>**Yes**<br>GO to A3.<br>**No**<br>GO to B3. |
| **A3: TEST FULL PEDAL TRAVEL** | |
| | 1 Measure the clutch pedal travel from fully up to fully compressed. |
| | Is the measurement between 140mm and 150mm?<br>**Yes**<br>GO to A4.<br>**No**<br>CHECK clutch pedal for obstructions. TEST the system for normal operation. |
| **A4: TEST CLUTCH PEDAL** | |
| | 1 Check lubrication. |
| | Is the clutch pedal shaft sufficiently lubricated?<br>**Yes**<br>GO to B3.<br>**No**<br>Lubricate clutch pedal shaft. |

## PINPOINT TEST B : CLUTCH CHATTER OR SHUDDER

| TEST CONDITIONS | DETAILS/RESULTS/ACTIONS |
|---|---|
| **B1: TEST CLUTCH CHATTER OR SHUDDER** | |
| | 1 Start the engine and engage 1st gear. |
| | 2 Run the engine between 1200 rpm and 1500 rpm. |
| | 3 Release clutch pedal slowly. |
| | Does the vehicle jerk when it starts off?<br>**Yes**<br>GO to B2.<br>**No**<br>Clutch OK. |
| **B2: TEST ENGINE/TRANSMISSION SUPPORT INSULATOR** | |
| | 1 Check engine/transmission mountings, support insulators for damage or loose bolts. |
| | Are the engine/transmission mountings, support insulators loose or damaged?<br>**Yes**<br>TIGHTEN the bolts or INSTALL new engine/transmission mountings as necessary. TEST the system for normal operation.<br>**No**<br>GO to B3. |
| **B3: TEST CLUTCH PRESSURE PLATE** | |
| | 1 Remove clutch pressure plate. |
| | Does the clutch pressure plate have signs of wear or damage?<br>**Yes**<br>INSTALL a new clutch pressure plate.<br>**No**<br>GO to B4. |
| **B4: TEST CLUTCH FRICTION DISC** | |
| | 1 Visually check the clutch friction disc. |
| | Is the clutch friction disc oil-fouled or does it have burn marks?<br>**Yes**<br>INSTALL a new clutch friction disc. TEST the system for normal operation.<br>**No**<br>CHECK the flywheel. |

## PINPOINT TEST C : CLUTCH DRAG

| TEST CONDITIONS | DETAILS/RESULTS/ACTIONS |
|---|---|
| **C1: CHECK BRAKE FLUID LEVEL** | |
| • NOTE: The hydraulic clutch fluid is supplied from the brake master cylinder. | |
| | 1 Check the brake fluid level. |
| | Is the brake fluid level between the MAX and MIN marks on the brake fluid reservoir?<br>**Yes**<br>GO to C2.<br>**No**<br>FILL brake fluid, the brake and clutch system for leaks. Test system for normal operation. |
| **C2: TEST CLUTCH PEDAL FREE TRAVEL** | |
| | 1 Operate clutch pedal manually to the point of resistance and release. |
| | 2 Measure pedal travel. |

GETtheMANUALS.org

| | |
|---|---|
| | Is the measured dimension within 15 mm?<br>**Yes**<br>INSTALL a new clutch pressure plate. TEST the system for normal operation.<br>**No**<br>GO to B3. |

| PINPOINT TEST D : CLUTCH PEDAL PULSATION | |
|---|---|
| **TEST CONDITIONS** | **DETAILS/RESULTS/ACTIONS** |
| **D1: TEST CLUTCH PEDAL** | |
| | 1 Check lubrication. |
| | Is the clutch pedal shaft sufficiently lubricated?<br>**Yes**<br>CHECK the flywheel.<br>**No**<br>LUBRICATE the clutch pedal shaft. TEST the system for normal operation. |

| PINPOINT TEST E : CLUTCH RELATED VIBRATIONS | |
|---|---|
| **TEST CONDITIONS** | **DETAILS/RESULTS/ACTIONS** |
| **E1: CHECK FOR ENGINE COMPONENT GROUNDING** | |
| | 1 Raise and support the vehicle.<br>REFER to: Jacking (100-02 Jacking and Lifting, Description and Operation). |
| | 2 Check the engine mountings for grounding on the body frame. |
| | 3 Check the exhaust manifold or other engine component grounding on the body or frame. |
| | Is there evidence of grounding on body or frame?<br>**Yes**<br>REPAIR or INSTALL a new as necessary. TEST the system for normal operation.<br>**No**<br>GO to E2. |
| **E2: CHECK FOR ACCESSORY DRIVE VIBRATIONS** | |
| | 1 Feel accessory vibration at clutch engage/disengage when engine torque changes. |
| | 2 Disconnect the accessory drive belt and check for vibration. |
| | Does the vibration stop when the drive belt is removed from the engine?<br>**Yes**<br>REPAIR or INSTALL new accessory drive belt components. REFER to:<br>Accessory Drive - V8 4.2L Petrol/V8 S/C 4.2L Petrol/2.5L NA V6 - AJV6/3.0L NA V6 - AJ27 (303-05 Accessory Drive, Diagnosis and Testing),<br>Noise, Vibration and Harshness (NVH) (100-04 Noise, Vibration and Harshness, Diagnosis and Testing).<br>**No**<br>GO to E3. |
| **E3: CHECK FOR RELEASE BEARING NOISE** | |
| | 1 Start the engine. |
| | 2 Depress and hold clutch pedal. |
| | Is a whirring, grating or grinding noise present?<br>**Yes**<br>INSTALL a new clutch slave cylinder. . TEST the system for normal operation.<br>**No**<br>GO to E4. |
| **E4: INSPECT FLYWHEEL** | |
| | 1 Remove the transmission.<br>• Five speed transmission -<br>REFER to: Manual Transmission (308-03A Manual Transmission/Transaxle - Vehicles With: 5-Speed Manual Transmission - GETRAG 221, Diagnosis and Testing).<br>• Six speed transmission -<br>REFER to: Manual Transmission (308-03B Manual Transmission/Transaxle - Vehicles With: S6-53 6-Speed Manual Transmission, Diagnosis and Testing). |
| | 2 Inspect for loose flywheel bolts. |
| | 3 Carry out flywheel runout check. |
| | Is the flywheel OK?<br>**Yes**<br>DIAGNOSE engine vibration concern.<br>REFER to: Engine - V8 4.2L Petrol/V8 S/C 4.2L Petrol/2.5L NA V6 - AJV6/3.0L NA V6 - AJ27 (303-00 Engine System - General Information, Diagnosis and Testing).<br>or<br>REFER to: Engine - 2.7L V6 - TdV6 (303-00 Engine System - General Information, Diagnosis and Testing).<br>**No**<br>TIGHTEN flywheel bolts or INSTALL a new flywheel. Test the system for normal operation. |

| PINPOINT TEST F : HARD SHIFTING | |
|---|---|
| **TEST CONDITIONS** | **DETAILS/RESULTS/ACTIONS** |
| **F1: CHECK FLUID LEVEL** | |
| • NOTE: The hydraulic clutch fluid is supplied from the brake master cylinder. | |
| | 1 Inspect the fluid level in the brake master cylinder reservoir. |
| | Is the fluid within the MAX and MIN level marks?<br>**Yes**<br>GO to C2.<br>**No**<br>FILL brake fluid, CHECK for leaks in the clutch and brake system. TEST the system for leaks. |

| PINPOINT TEST G : EXCESSIVE NOISE | |
|---|---|
| **TEST CONDITIONS** | **DETAILS/RESULTS/ACTIONS** |
| **G1: CHECK TRANSMISSION NEUTRAL POSITION** | |
| | 1 Start the engine and run it in neutral. |
| | 2 Depress clutch pedal fully. |

GETtheMANUALS.org

| | |
|---|---|
| | Are there noises when the clutch is operated?<br>**Yes**<br>GO to G2.<br>**No**<br>System OK. |
| **G2: TEST CLUTCH PEDAL FREE TRAVEL** | |
| | 1 Press the clutch down manually until resistance is felt, then release it again. |
| | 2 Measure pedal travel. |
| | Is the measured dimension within 15 mm?<br>**Yes**<br>GO to G3.<br>**No**<br>INSTALL a new clutch master cylinder. |
| **G3: TEST CLUTCH SLAVE CYLINDER WITH RELEASE BEARING** | |
| | 1 Remove the transmission.<br>• Five speed transmission -<br>REFER to: Manual Transmission (308-03A Manual Transmission/Transaxle - Vehicles With: 5-Speed Manual Transmission - GETRAG 221, Diagnosis and Testing).<br>• Six speed transmission -<br>REFER to: Manual Transmission (308-03B Manual Transmission/Transaxle - Vehicles With: S6-53 6-Speed Manual Transmission, Diagnosis and Testing). |
| | 2 Check the clutch slave cylinder bolts. |
| | 3 Check the release bearing for wear and rust. |
| | Are the bolts loose or are there signs of wear or rust?<br>**Yes**<br>TIGHTEN the bolts or INSTALL a new clutch slave cylinder with the release bearing. TEST the system for normal operation.<br>**No**<br>GO to G4. |
| **G4: CHECK CLUTCH FRICTION DISC TORSION SPRINGS** | |
| | 1 Check torsion springs for wear. |
| | Do the torsion springs have signs of wear?<br>**Yes**<br>INSTALL a new clutch friction disc. TEST the system for normal operation.<br>**No**<br>Check crankshaft end play.<br>REFER to: Camshaft End Play (303-00 Engine System - General Information, General Procedures). |

| **PINPOINT TEST H : FLUID LEAKAGE** | |
|---|---|
| **TEST CONDITIONS** | **DETAILS/RESULTS/ACTIONS** |
| **H1: INSPECT CLUTCH MASTER CYLINDER** | |
| | 1 Inspect the clutch master cylinder for leakage. |
| | Is the clutch master cylinder OK?<br>**Yes**<br>GO to H2.<br>**No**<br>INSTALL a new clutch master cylinder as necessary.<br>REFER to: Clutch Master Cylinder (308-02 Clutch Controls, Removal and Installation). |
| **H2: INSPECT CLUTCH SLAVE CYLINDER** | |
| | 1 Inspect the clutch slave cylinder for leaks. |
| | Is the clutch slave cylinder OK?<br>**Yes**<br>GO to H3.<br>**No**<br>INSTALL a new clutch slave cylinder as necessary. |
| **H3: INSPECT SYSTEM HYDRAULIC TUBES** | |
| | 1 Inspect the clutch hydraulic tubes for loose or damaged fittings causing leakage. |
| | Are the clutch hydraulic tubes OK?<br>**Yes**<br>CARRY OUT road test to verify customer complaint.<br>**No**<br>INSTALL new components as necessary. Carry out road test. |

GETtheMANUALS.org

# Manual Transmission / Transaxle and Clutch - General Information - Clutch System Bleeding

General Procedures

**1.** WARNING: Brake fluid contains polyglycol ethers and polyglycols. Avoid contact with the eyes. Wash hands thoroughly after handling, as prolonged contact may cause irritation and dermatitis. If brake fluid contacts the eyes, flush the eyes with cold water or eyewash solution and seek medical attention. If taken internally do not induce vomiting, seek immediate medical attention. Failure to follow these instructions may result in personal injury.

CAUTION: If brake fluid comes into contact with the paintwork, the affected area must be immediately washed down with cold water. Failure to follow this instruction may result in damage to the vehicle.

• NOTE: Make sure of absolute cleanliness when filling brake fluid.

• NOTE: Do not re-use brake fluid.

Bleed the clutch system.

**2.** Fill the brake fluid reservoir with brake fluid.

**3.** Remove the right-hand catalytic converter.
For additional information, refer to: Catalytic Converter - 2.7L V6 - TdV6 (309-00 Exhaust System, Removal and Installation).

**4.** Remove the bleed nipple cover.

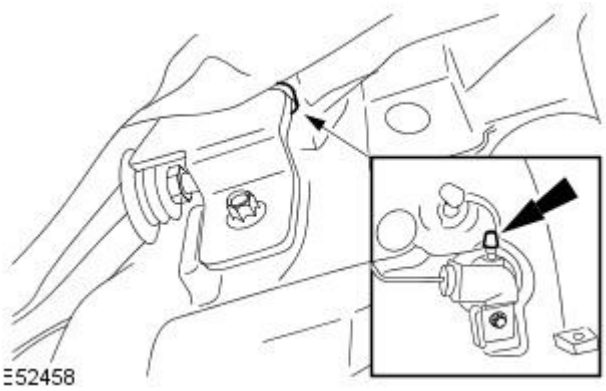


**5.** Bleed the clutch system.

- Attach a proprietary bleed jar to the bleed nipple and open the bleed nipple one turn.
- Depress the clutch pedal repeatedly until the emerging fluid is free of bubbles; always make sure that there is sufficient fluid (5 mm above the MAX) in the reservoir.
- After bleeding, tighten the bleed nipple.
- Install the bleed nipple cover.
- Install the dust cover.
- After bleeding, depress the clutch ten times and check that it is functioning correctly.

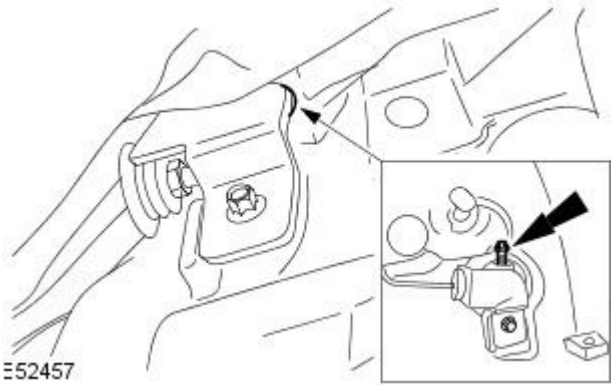


**6.** Install the right-hand catalytic converter.
For additional information, refer to: Catalytic Converter - 2.7L V6 - TdV6 (309-00 Exhaust System, Removal and Installation).

**7.** NOTE: Make sure of absolute cleanliness when filling brake fluid.

Check the brake fluid level.

- The fluid level should be between the MIN and MAX marks. If the level drops below the MIN mark, the brake warning indicator will light up.
- As necessary, fill the brake fluid reservoir with brake fluid.

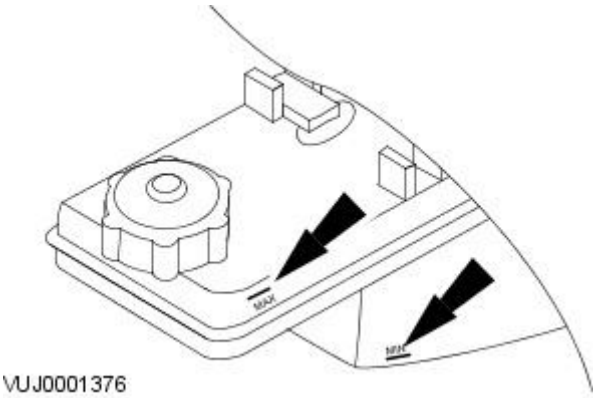


GETtheMANUALS.org

# Manual Transmission / Transaxle and Clutch - General Information - Release Hub and Bearing Check

General Procedures

1. Turn the clutch release hub and bearing in both directions and check for any binding or abnormal noise.
2. CAUTION: The clutch release hub and bearing is sealed and must not be immersed in any type of cleaning fluid.

   Check for worn or damaged clutch release hub and bearing fork contact surfaces.
3. Install the clutch release hub and bearing on the input shaft and check for a smooth sliding condition.
4. Check driveshaft splines for rust, scoring, or damage.

GETtheMANUALS.org

# Clutch -

**Torque Specifications**

| Description | Nm | lb-ft | lb-in |
|---|---|---|---|
| Pressure plate retaining bolts | 23 | 17 | - |

GETtheMANUALS.org

# Clutch - Clutch

Description and Operation

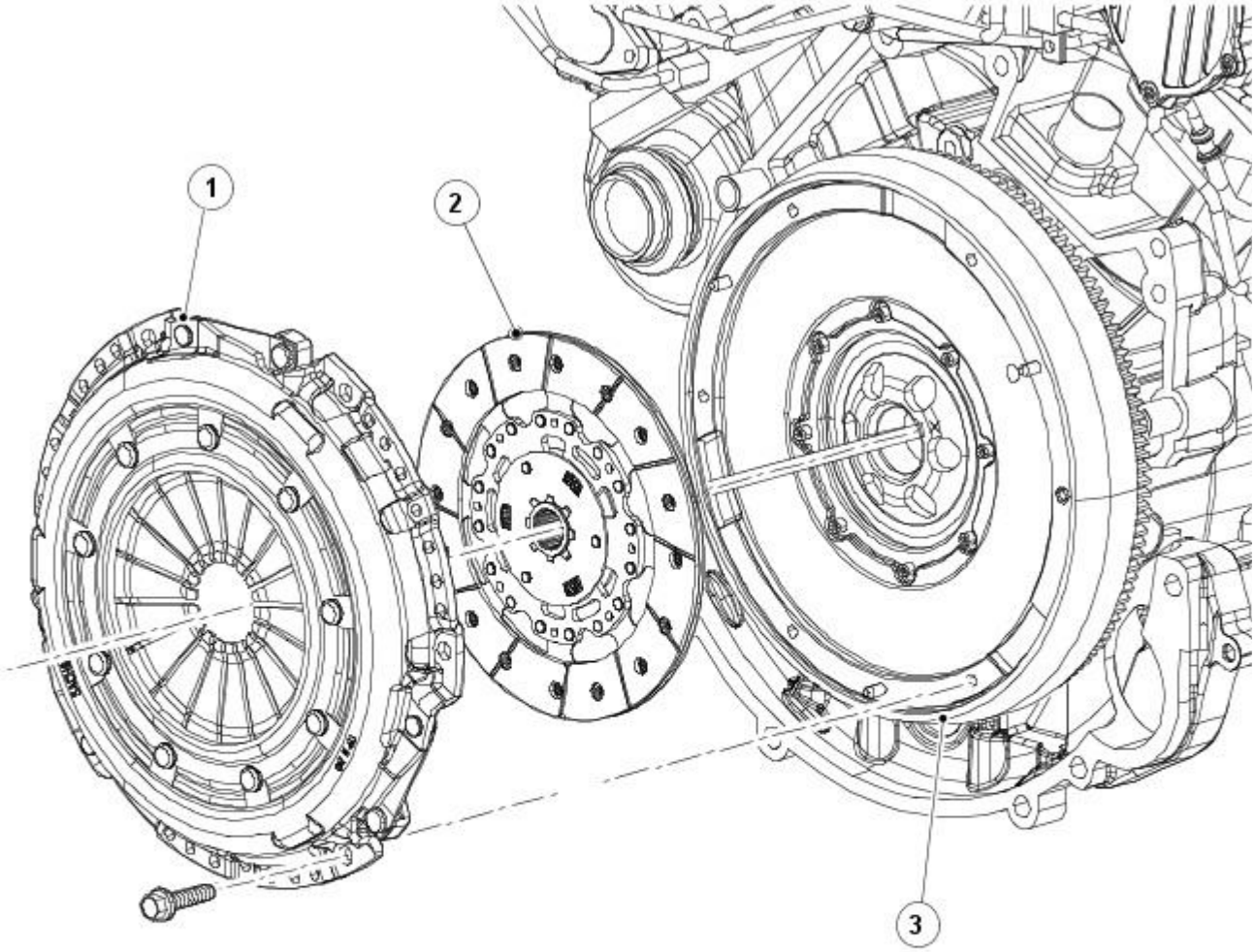


E52770

| Item | Part Number | Description |
|---|---|---|
| 1 | — | Pressure plate |
| 2 | — | Friction disc |
| 3 | — | Flywheel |

The clutch transfers the engine torque to the transmission.

The clutch consists of a disc and a pressure plate with a diaphragm spring, bolted to the flywheel.

When the clutch pedal is operated the power transmission from the engine to the transmission is interrupted. The clutch is therefore engaged when the pedal is not depressed. Pressing down the pedal disengages the clutch.

GETtheMANUALS.org

Published: 11-May-2011

# Clutch - Clutch

Diagnosis and Testing

For additional information, refer to Section 308-00 Manual Transmission/Transaxle and Clutch - General Information.

GETtheMANUALS.org

# Clutch - Clutch Disc and Pressure Plate

Removal and Installation

| Special Tool(s) | |
|---|---|
| 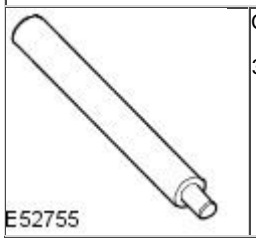 E52755 | Clutch alignment tool/pilot bearing installer<br><br>303-1096 |

## Removal

**1.** Remove the manual transmission. For additional information, refer to:

Transmission (308-03A Manual Transmission/Transaxle - Vehicles With: 5-Speed Manual Transmission - GETRAG 221, Removal), Transmission (308-03B Manual Transmission/Transaxle - Vehicles With: S6-53 6-Speed Manual Transmission, Removal).

E52451

**2.** CAUTION: Working in a diagonal sequence, progressively loosen the bolts.

• NOTE: Restrain the flywheel.

Remove the pressure plate and clutch disc.

- Remove the 6 bolts.

## Installation

Vehicles with diesel engine

**1.** NOTE: The clutch cover is self adjusting. It is recommended that a clutch disc and clutch cover is replaced as an assembly. If a used clutch cover is assembled with a new clutch disc, the clutch cover adjustment must be reset prior to assembly. With the clutch cover supported under its outside edge, press down evenly on the diapragm fingers as shown, until the clutch cover adjustment ring can be rotated fully counterclockwise. With the adjustment ring held in this position, release the pressure on the diaphragm fingers. The adjustment ring will be held in this position until self adjustment on the application of the clutch pedal.

Check, and if necessary, reset the clutch pressure plate.

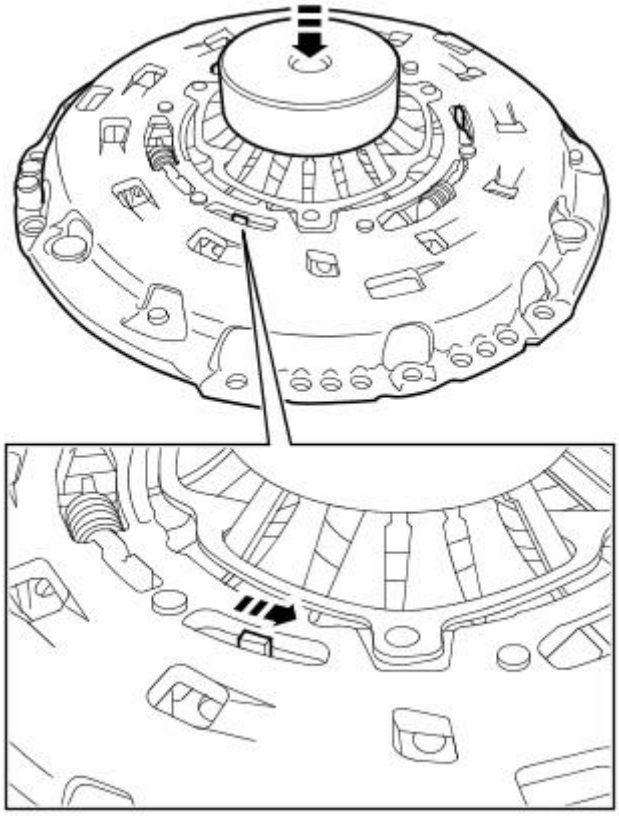
E54194

All vehicles

GETtheMANUALS.org

**2.** CAUTIONS:

Examine the flywheel for signs of scoring or overheating. Renew if worn or damaged.

Examine the clutch release bearing for signs of wear or damage. Renew if necessary.

Examine the spigot bearing for signs of wear or damage. Renew if necessary.

Clean the component mating faces.

**3.** CAUTIONS:

Install the clutch disc with 'TRANSMISSION SIDE' marking against the clutch cover.

Use the special tool to align the components.

Working in a diagonal sequence, progressively tighten the bolts.

• NOTE: Restrain the flywheel.

Install the clutch disc and pressure plate.

- Tighten the bolts to 25 Nm (18 lb.ft).

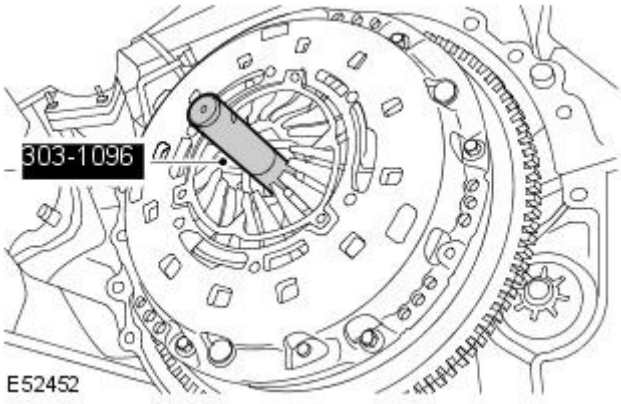


**4.** NOTE: Make sure that the input shaft of the transmission is moved squarely into the hub of the clutch disc. Do not bend in any direction.

Install the manual transmission.For additional information, refer to:

Transmission (308-03A Manual Transmission/Transaxle - Vehicles With: 5-Speed Manual Transmission - GETRAG 221, Installation), Transmission (308-03B Manual Transmission/Transaxle - Vehicles With: S6-53 6-Speed Manual Transmission, Installation).

GETtheMANUALS.org

# Clutch Controls -

**General Specifications**

| Item | Specification |
|---|---|
| Brake fluid | ITT super dot 4 |

**Torque Specifications**

| Description | Nm | lb-ft | lb-in |
|---|---|---|---|
| Slave cylinder retaining bolts | 9 | - | 80 |
| Slave cylinder high-pressure pipe union | 24 | 18 | - |

GETtheMANUALS.org

# Clutch Controls - Clutch Controls

Description and Operation

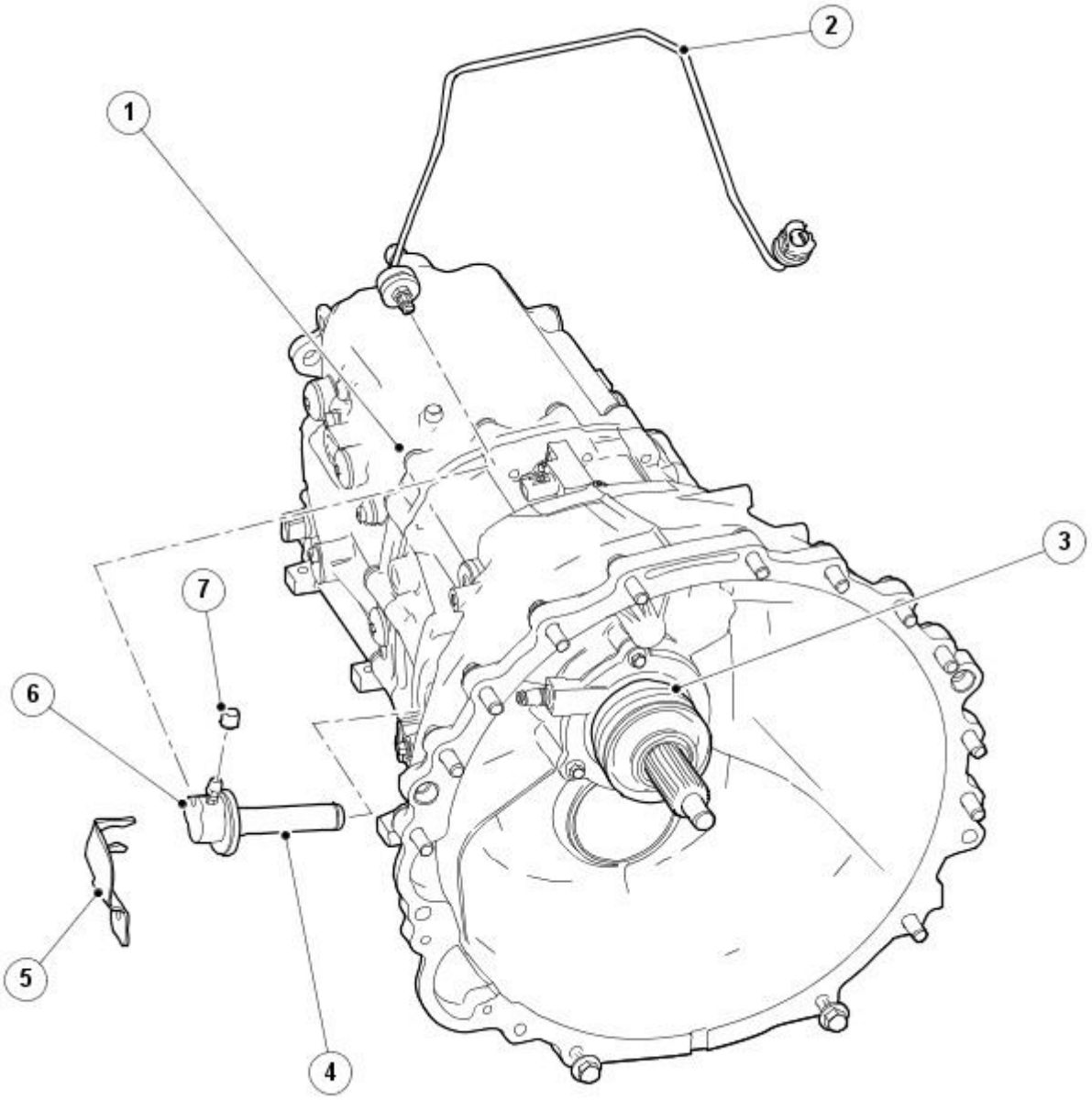


E52832

| Item | Part Number | Description |
|---|---|---|
| 1 | — | Transmission |
| 2 | — | Clutch slave cylinder supply tube |
| 3 | — | Clutch slave cylinder |
| 4 | — | Hydraulic restricter |
| 5 | — | Hydraulic restricter retaining bracket |
| 6 | — | Bleed tube |
| 7 | - | Bleed tube dust cover |

The vehicle has a hydraulically operated clutch. The brake master cylinder reservoir has a separate chamber and is used to supply the hydraulic clutch system with fluid.

Applying the clutch pedal builds up pressure in the clutch master cylinder and operates the release bearing integrated in the clutch slave cylinder.

The hydraulic clutch system has the following advantages:

- Automatic adjustment.
- Low operating effort.
- Minimal wear.

## Reservoir

The brake fluid reservoir supplies both the hydraulic clutch system and the brake system with brake fluid.

The hydraulic clutch system and the brake system are separate inside the brake fluid reservoir. In the event of any leaks in the hydraulic clutch system the brake system remains fully operative.

## Clutch Master Cylinder

GETtheMANUALS.org

The pressure required to operate the clutch system is produced in the clutch master cylinder.

When the clutch pedal is applied the piston rod moves the piston in the clutch master cylinder. This displaces the hydraulic fluid in the clutch master cylinder, which in turn displaces the hydraulic fluid in the clutch slave cylinder via the high - pressure line.

## Clutch Slave Cylinder

The central slave cylinder is fixed to the clutch housing with three bolts, together with an integrated release bearing. The release bearing is a press - fit on the clutch slave cylinder.

The hydraulic fluid which is displaced by the master cylinder piston moves the piston in the clutch slave cylinder, which in turn moves the release bearing in an axial direction. The release bearing presses against the tongues of the diaphragm spring with the inner bearing ring. This breaks the friction contact between the clutch disc and the flywheel.

When the clutch pedal is released the diaphragm spring returns the piston in the clutch slave cylinder to its original position. This restores the friction contact between the clutch disc and the flywheel.

## Hydraulic Restricter

The hydraulic restricter is fitted through the transmission housing and connects to the clutch slave cylinder to the clutch slave cylinder supply tube. The hydraulic restricter reduces clutch snatch, should the clutch pedal be released too quickly.

The clutch bleed tube is located on the hydraulic restricter.

GETtheMANUALS.org

Published: 11-May-2011

# Clutch Controls - Clutch Controls

Diagnosis and Testing

For additional information, refer to Section 308-00 Manual Transmission/Transaxle and Clutch - General Information

GETtheMANUALS.org

# Clutch Controls - Clutch Master Cylinder

Removal and Installation

## Removal

WARNING: Brake fluid contains polyglycol ethers and polyglycols. Avoid contact with the eyes. Wash hands thoroughly after handling, as prolonged contact may cause irritation and dermatitis. If brake fluid contacts the eyes, flush the eyes with cold water or eyewash solution and seek medical attention. If taken internally do not induce vomiting, seek immediate medical attention. Failure to follow these instructions may result in personal injury.

• CAUTIONS:

If brake fluid comes into contact with the paintwork, the affected area must be immediately washed down with cold water.

Brake fluid will escape when the pipes are disconnected.

Vehicles with diesel engine

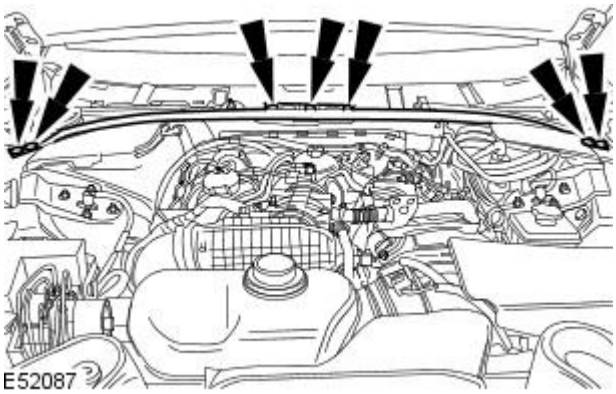


1. Remove the cowl panel grille.
   For additional information, refer to: Cowl Panel Grille (501-02 Front End Body Panels, Removal and Installation).
2. Remove the engine compartment support.

All vehicles

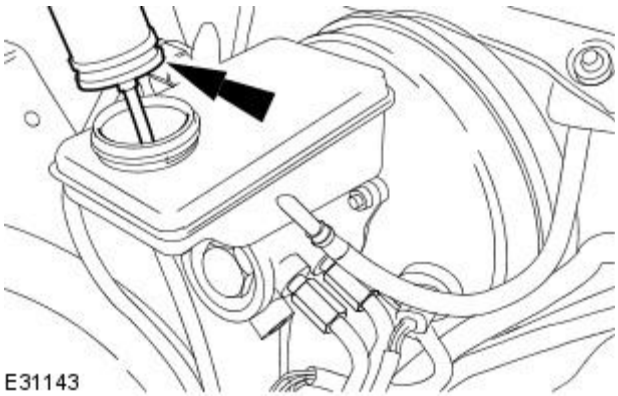


3. Using a suitable suction device drain the brake fluid reservoir.

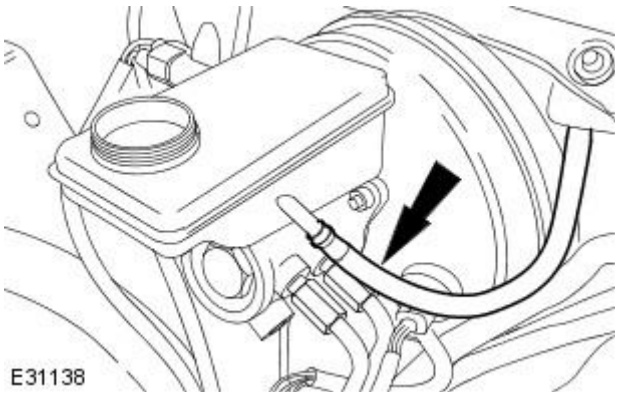


4. Detach the clutch master cylinder supply hose.

GETtheMANUALS.org

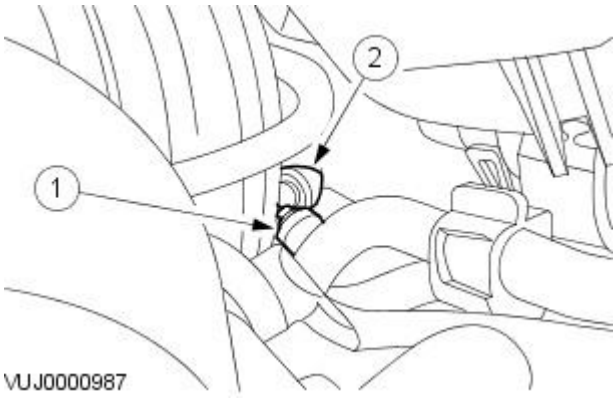


**5.** Disconnect the slave cylinder supply hose.

1. Remove the slave cylinder supply hose retaining clip.
2. Disconnect the slave cylinder supply hose.

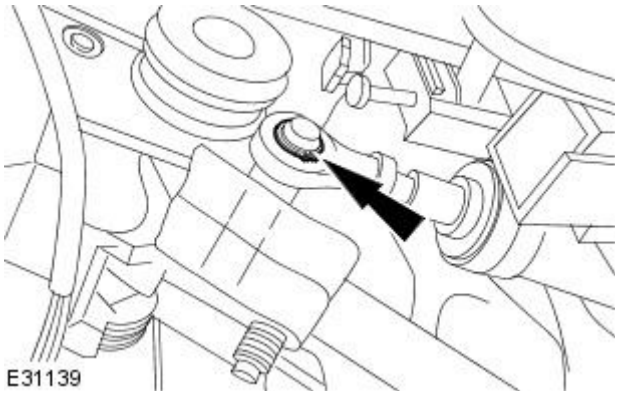


**6.** Remove clutch master cylinder retaining clip.

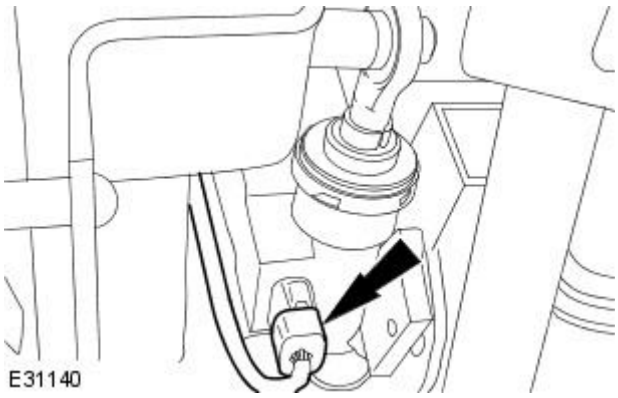


**7.** Disconnect the clutch master cylinder electrical connector.

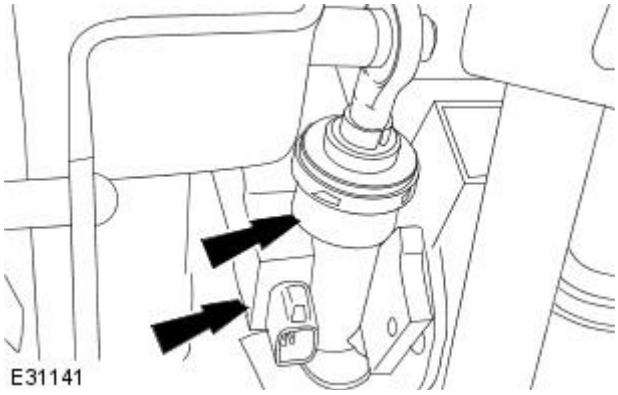


**8.** Detach the clutch master cylinder.

- Remove the clutch master cylinder retaining bolts.

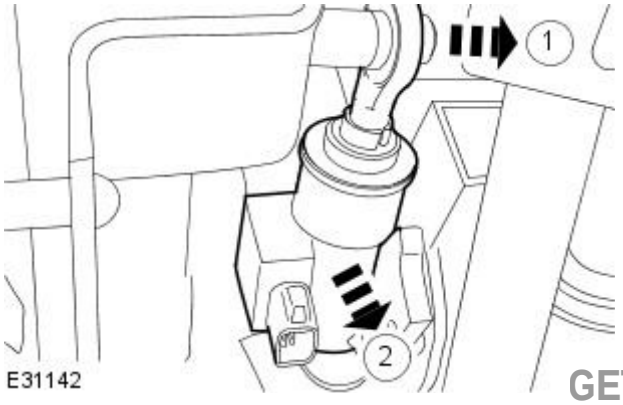


**9.** Detach the clutch master cylinder.

1. Detach the clutch master cylinder from the clutch pedal.
2. Detach the clutch master cylinder.

GETtheMANUALS.org

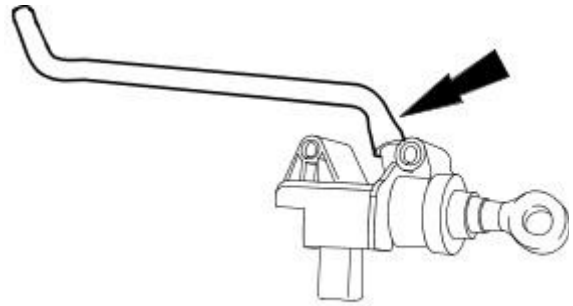

E31137

10. Remove the clutch master cylinder.
    - Remove the clutch master cylinder supply pipe.

## Installation

1. To install, reverse the removal procedure.
2. Carry out the clutch system bleeding procedure.
   For additional information, refer to: Clutch System Bleeding (308-00 Manual Transmission/Transaxle and Clutch - General Information, General Procedures).

GETtheMANUALS.org

# Clutch Controls - Clutch Slave Cylinder

Removal and Installation

## Removal

1. Remove the transmission.
   For additional information, refer to: Transmission (308-03B Manual Transmission/Transaxle - Vehicles With: S6-53 6-Speed Manual Transmission, Removal).
2. Remove the hydraulic restricter retaining bracket.

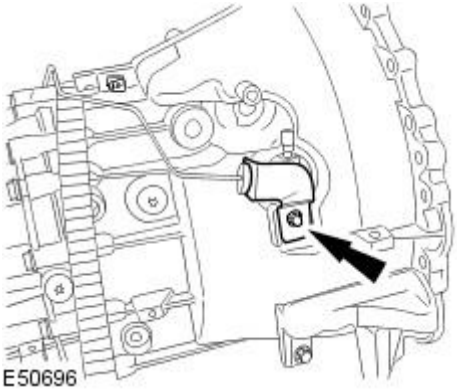

E50696

3. Reposition the clutch slave cylinder supply tube mount rubber.

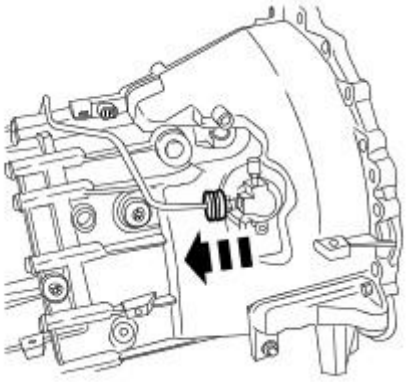

E50697

4. Detach the clutch slave cylinder supply tube.

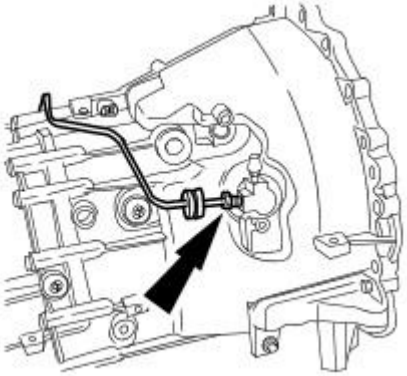

E50698

5. Remove the retaining clip.

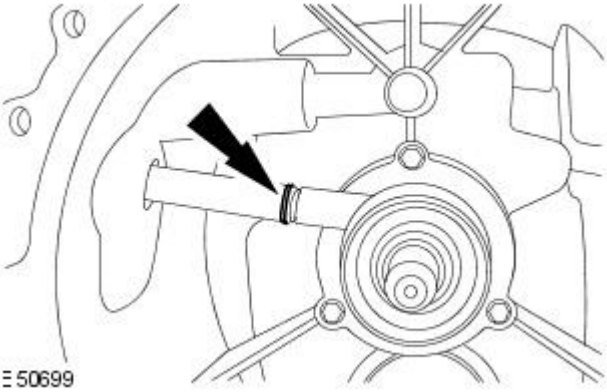

E50699

GETtheMANUALS.org

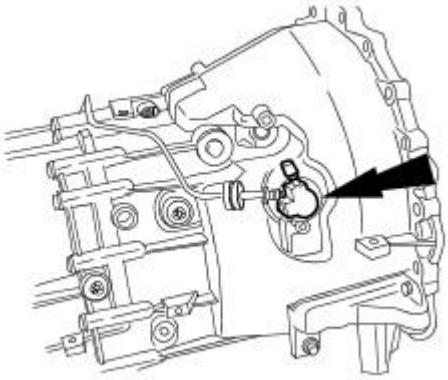

E50700

**6.** Remove the hydraulic restricter.

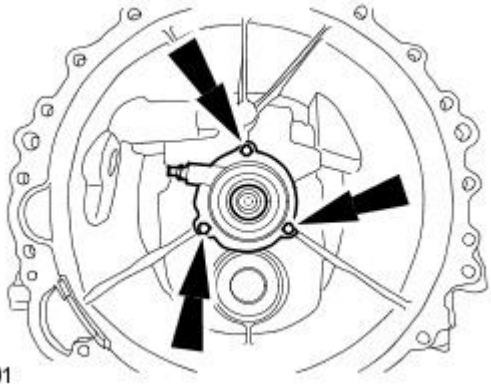

E50701

**7.** Remove the clutch slave cylinder.

## Installation

• NOTE: Apply suitable tape to the input shaft to protect the slave cylinder seal from damage. Remove the tape when the slave cylinder is installed.

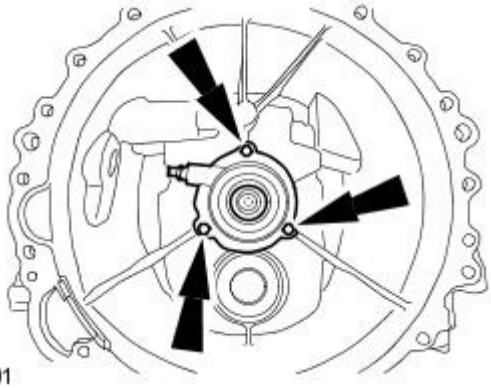

E50701

**1.** To install, reverse the removal procedure.

- Tighten to 9 Nm.

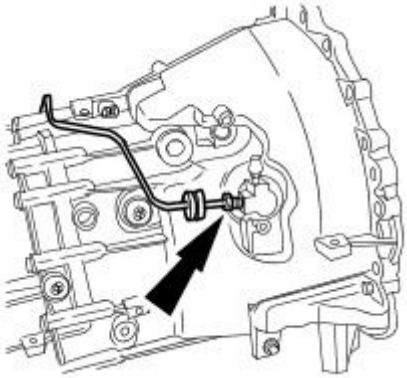

E50698

**2.** Tighten to 24 Nm.

**3.** Install the transmission.
For additional information, refer to: Transmission (308-03B Manual Transmission/Transaxle - Vehicles With: S6-53 6-Speed Manual Transmission, Installation).

GETtheMANUALS.org

# Manual Transmission / Transaxle - Vehicles With: 5-Speed Manual Transmission - GETRAG 221 -

**Torque Specifications**

| Description | Nm | lb-ft | lb-in |
|---|---|---|---|
| Transmission housing retaining bolts | 47 | 35 | - |
| Reverse lamp switch | 20 | 15 | - |
| Support insulator retaining bolt | 40 | 30 | - |
| Transmission flexible joint retaining bolts | 85 | 63 | - |
| Transmission support retaining bolts | 55 | 41 | - |
| Transmission drain plug | 50 | 37 | - |
| Transmission fill plug | 50 | 37 | - |

GETtheMANUALS.org

# Manual Transmission / Transaxle - Vehicles With: 5-Speed Manual Transmission - GETRAG 221 - Manual Transmission

Description and Operation

The transmission consists of the following:

- A 2 part die cast aluminum housing.
- Bevel cut gears that rotate on needle roller bearings.
- An input shaft and output shaft that rotate on ball bearings.
- A layshaft that rotates on roller bearings.
- Selector shaft assemblies.

The engine rotational torque is transmitted from the crankshaft through the clutch to the transmission input shaft, which then transmits drive to a layshaft and then the output shaft by utilizing an arrangement of gears. When reverse gear is selected, the direction of the output shaft is changed by an idler gear assembly.

In neutral, none of the gears are connected to the input or output shaft through the relevant synchronizer unit. No torque is transmitted to the driveline.

GETtheMANUALS.org

Published: 11-May-2011

# Manual Transmission / Transaxle - Vehicles With: 5-Speed Manual Transmission - GETRAG 221 - Manual Transmission

Diagnosis and Testing

For additional information, refer to Section 308-00 Manual Transmission/Transaxle and Clutch - General Information

GETtheMANUALS.org

# Manual Transmission / Transaxle - Vehicles With: 5-Speed Manual Transmission - GETRAG 221 - Drain Procedure

General Procedures

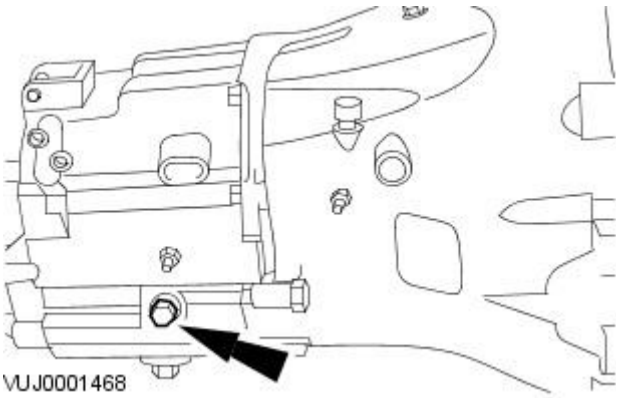


1. Raise and support the vehicle.
   For additional information, refer to Section 100-02 Jacking and Lifting.
2. Remove the transmission fill plug.

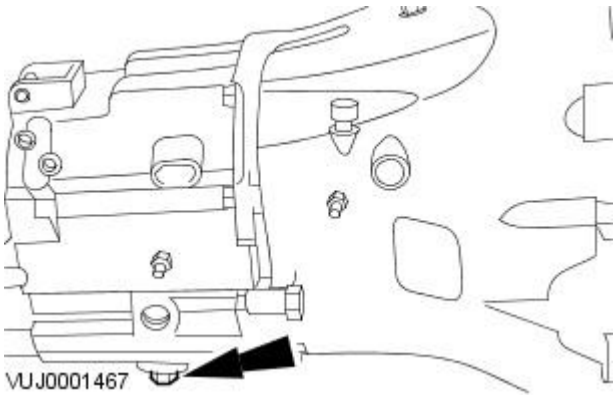


3. Remove the transmission drain plug and drain the fluid into a suitable container.

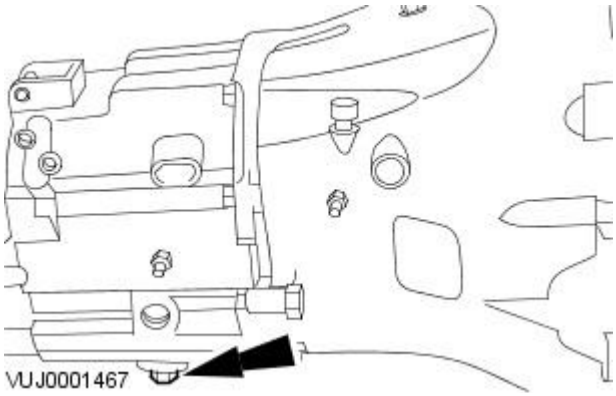


4. Install the transmission drain plug.
   1. Tighten to 50 Nm.

GETtheMANUALS.org

# Manual Transmission / Transaxle - Vehicles With: 5-Speed Manual Transmission - GETRAG 221 - Fill Procedure

General Procedures

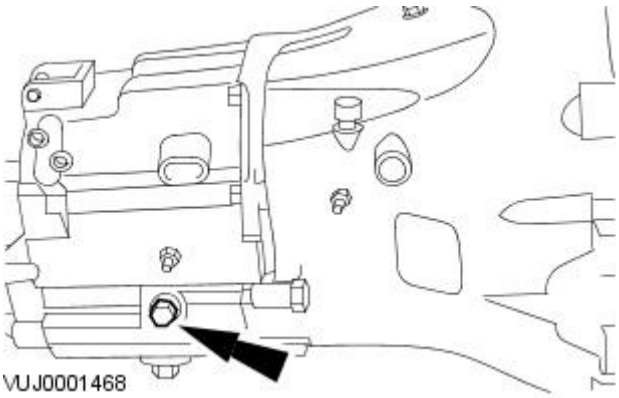


1. Raise and support the vehicle. For additional information, refer to For additional information, refer to Section 100-02 Jacking and Lifting.
2. Remove the transmission fill plug.

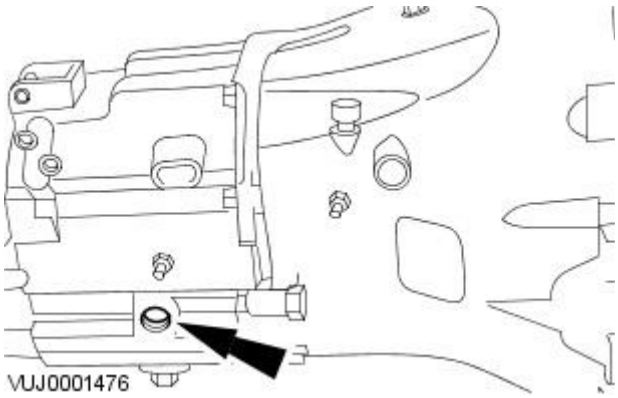


3. Fill the transmission to 0.5 mm (0.02 in) below the lower edge of the fill plug bore.

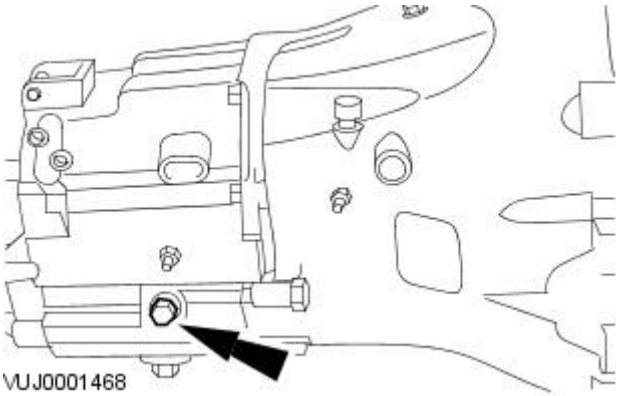


4. Install the transmission fill plug.
   1. Tighten to 50 Nm.
5. Lower the vehicle.

GETtheMANUALS.org

# Manual Transmission / Transaxle - Vehicles With: 5-Speed Manual Transmission - GETRAG 221 - Gearshift Control Shaft Seal

In-vehicle Repair

## Removal

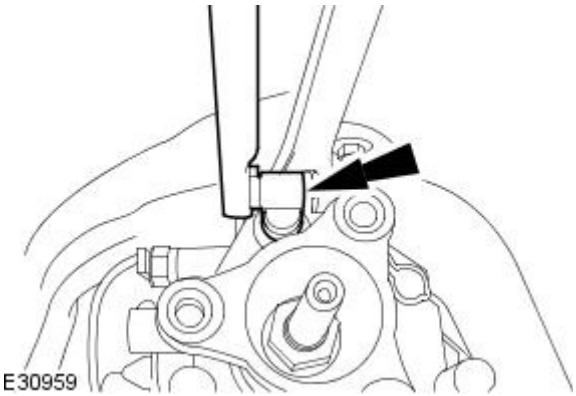


1. Remove the driveshaft.
   For additional information, refer to Section 205-01 Driveshaft.
2. Detach the gearshift control shaft.
   - Remove the gearshift control shaft locating pin.

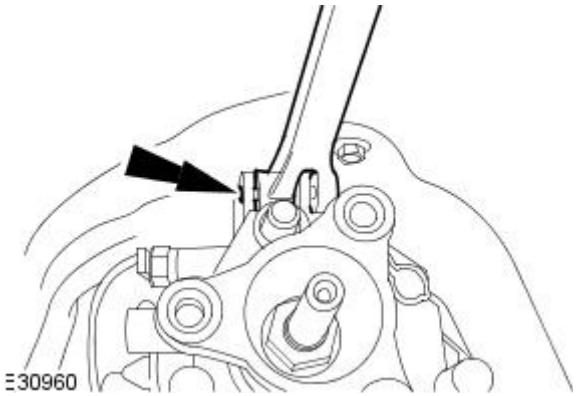


3. Detach the stabilizer rod.
   - Remove the stabilizer rod locating pin.

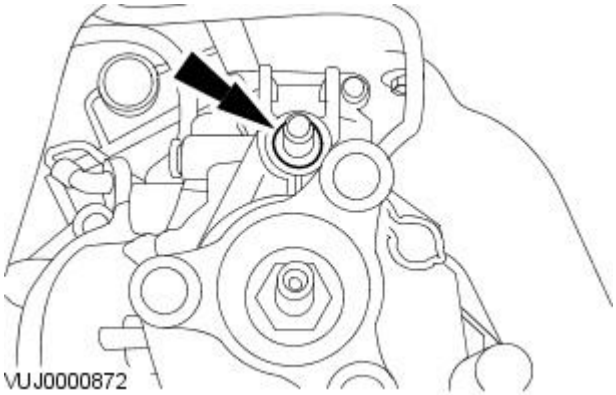


4. Remove and discard the gearshift control shaft seal.

## Installation

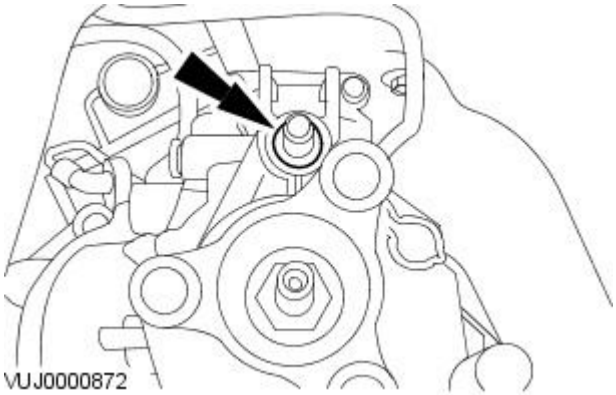


1. NOTE: Apply a light film of transmission oil to the gearshift control shaft seal.

   Install a new gearshift control shaft seal.

GETtheMANUALS.org

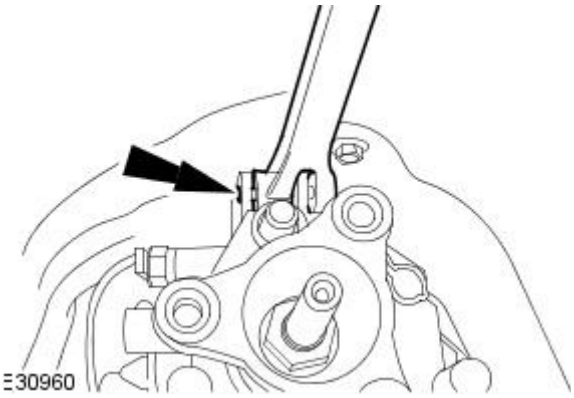


**2.** Attach the stabilizer rod.

- Install the stabilizer rod locating pin.

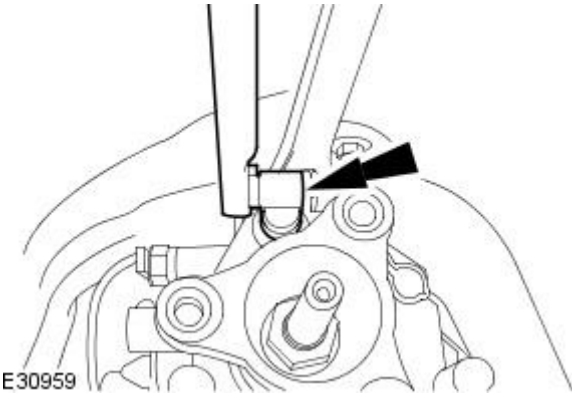


**3.** Attach the gearshift control shaft.

- Install the gearshift control shaft locating pin.

**4.** Install the driveshaft.
For additional information, refer to Section 205-01 Driveshaft.

GETtheMANUALS.org

# Manual Transmission / Transaxle - Vehicles With: 5-Speed Manual Transmission - GETRAG 221 - Input Shaft Seal

In-vehicle Repair

| Special Tool(s) | |
|---|---|
| 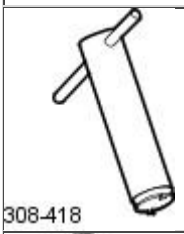 308-418 | Input seal remover<br><br>308-418 |
| 308-417 | Input seal installer<br><br>308-417 |

## Removal

1. Remove the clutch slave cylinder. For additional information, refer to Section 308-02 Clutch Controls.
2. Remove the input shaft seal.

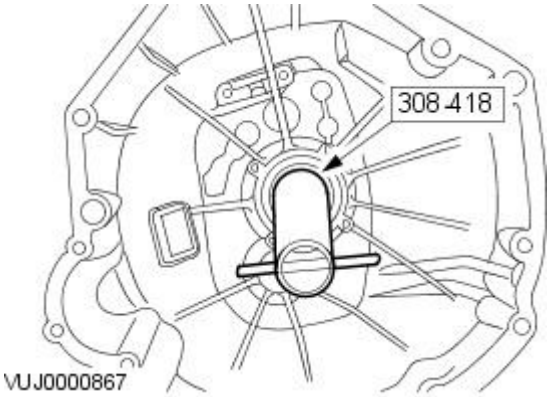

VUJ0000867

## Installation

1. To install, reverse the removal procedure.

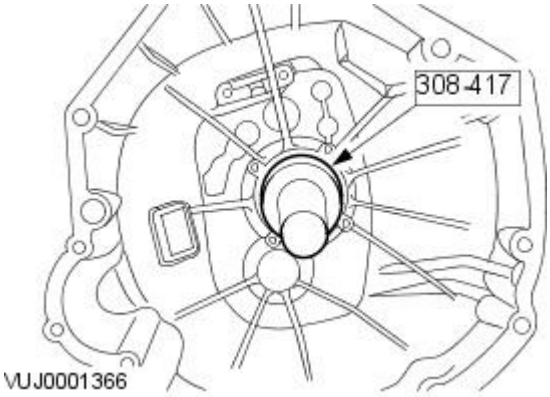

VUJ0001366

GETtheMANUALS.org

# Manual Transmission / Transaxle - Vehicles With: 5-Speed Manual Transmission - GETRAG 221 - Output Shaft Seal

In-vehicle Repair

| Special Tool(s) | |
|---|---|
| 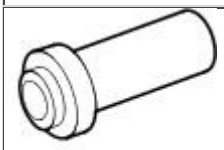 307-136 | Output shaft seal installer<br><br>307-136 |
| 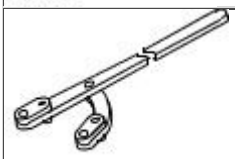 205053 | Propellor shaft flange wrench<br><br>205-053 |
| 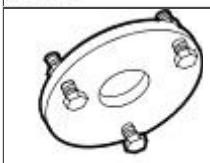 204-265 | Flange remover<br><br>204-265 |
| 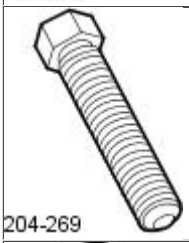 204-269 | Flange remover forcing screw<br><br>204-269 |
| 204-266 | Flange remover<br><br>204-266 |

**Materials**

| Name | Specification |
|---|---|
| Thread Locking Material | Loctite 243 |

## Removal

1. Remove the driveshaft.
   For additional information, refer to Section 205-01 Driveshaft.
2. Remove and discard the output shaft flange nut.

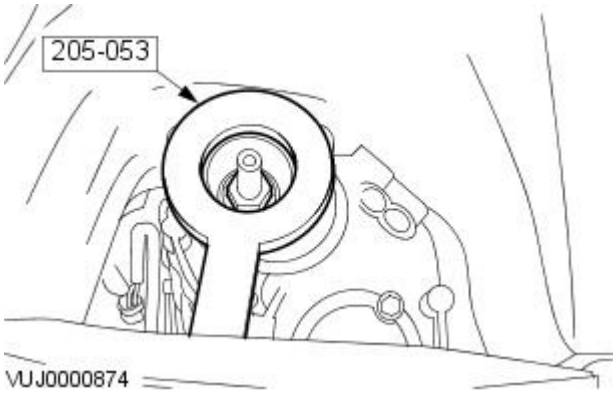


GETtheMANUALS.org

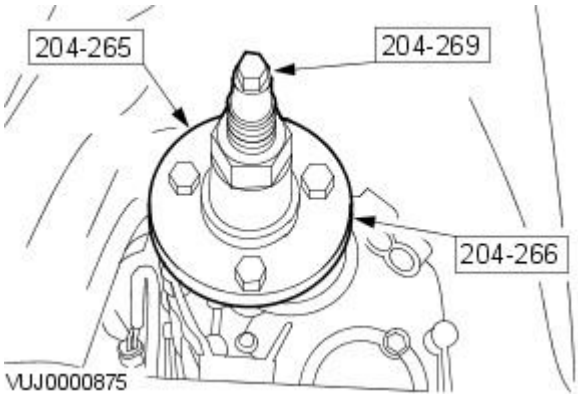


**3.** Remove the output shaft flange.

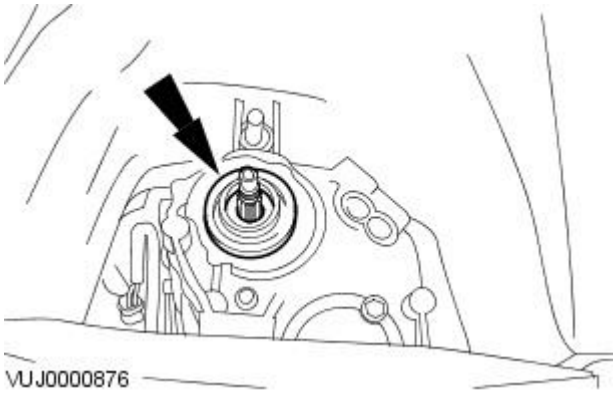


**4.** Remove the output shaft seal.

## Installation

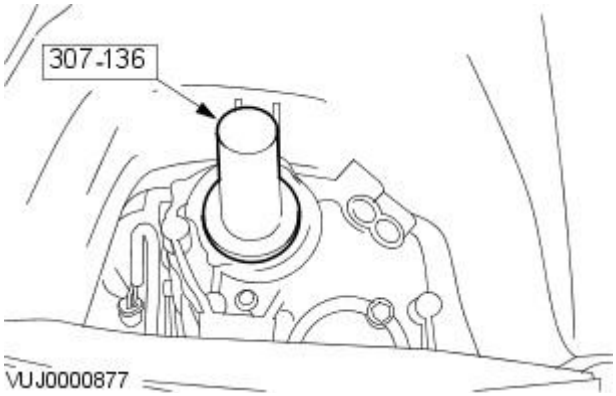


**1.** NOTE: Clean any existing thread locking material from the output shaft and output flange.

• NOTE: Apply a light film of transmission oil to the output shaft oil seal.

Install the output shaft seal.

- Install new the retaining nut.

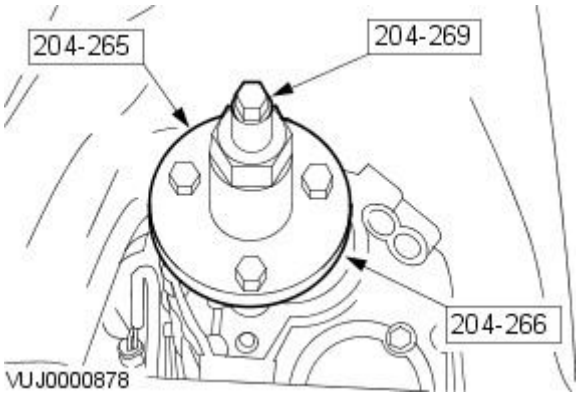


**2.** Install the output shaft flange.

GETtheMANUALS.org

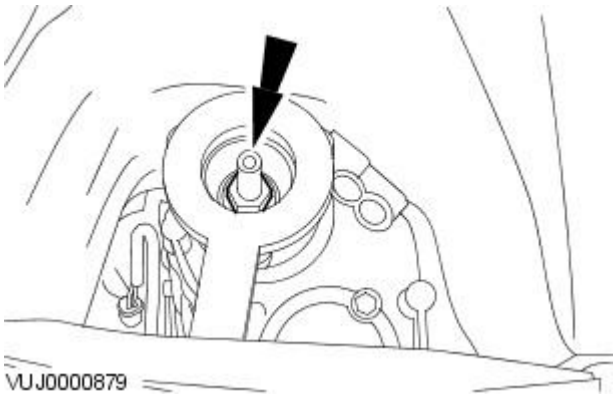


**3.** NOTE: Apply Loctite 243 to the retaining nut.

Install the output shaft nut.

- Tighten to 120 Nm .

**4.** Install the driveshaft.
For additional information, refer to Section 205-01 Driveshaft.

GETtheMANUALS.org

# Manual Transmission / Transaxle - Vehicles With: 5-Speed Manual Transmission - GETRAG 221 - Support Insulator

In-vehicle Repair

| Special Tool(s) | |
|---|---|
| 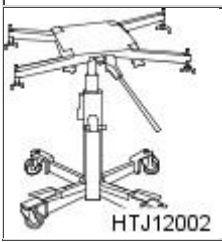 HTJ12002 | Powertrain Assembly Jack<br><br>HTJ1200-02 |

1. Raise and support the vehicle. For additional information, refer to For additional information, refer to Section 100-00 General Information.
2. Position the transmission jack and install holding strap around transmission.

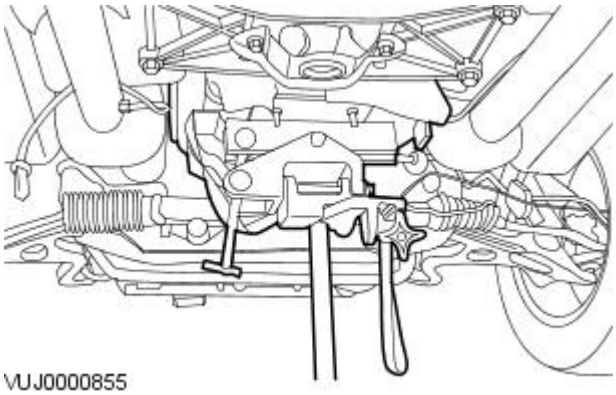


3. Detach the support insulator.

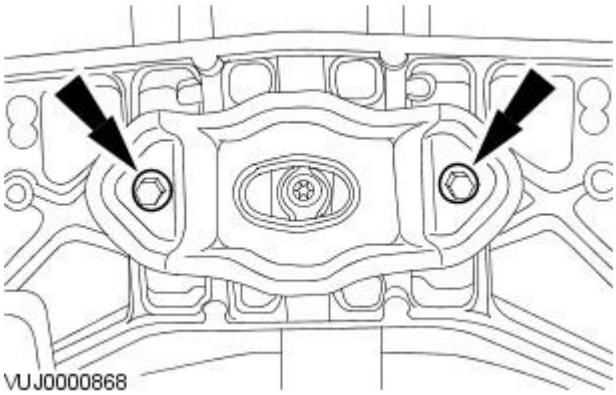


4. Remove the support insulator.

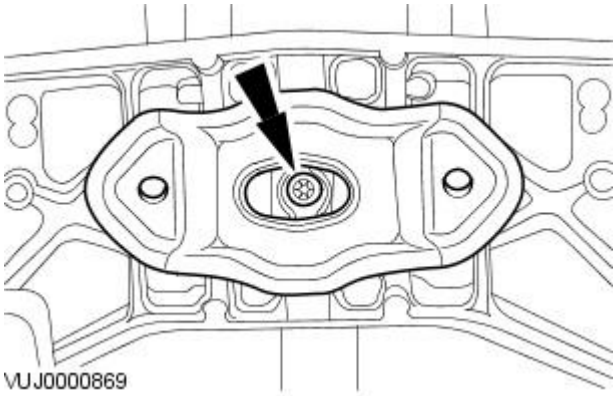


## Installation

GETtheMANUALS.org

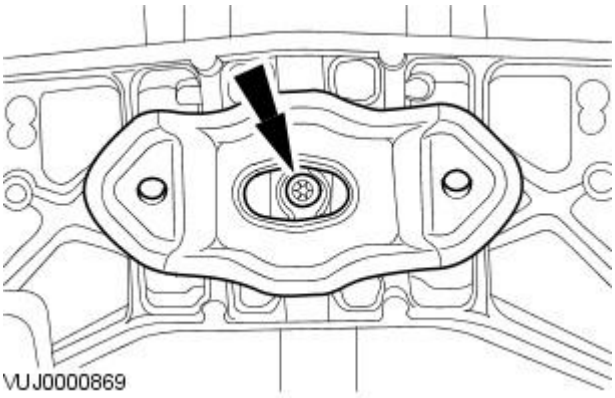


**1.** To install, reverse the removal procedure.

- Tighten to 40 Nm.

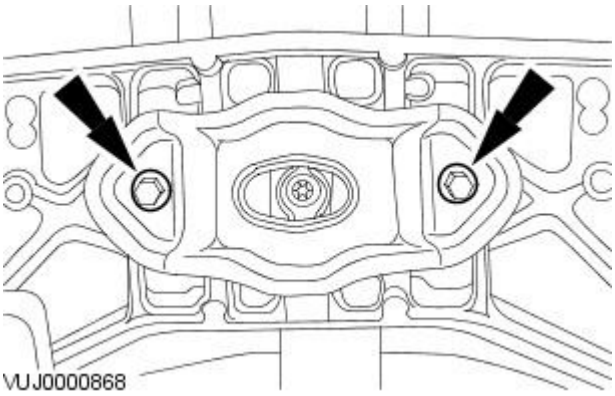


**2.** Tighten to 40 Nm.

GETtheMANUALS.org

# Manual Transmission / Transaxle - Vehicles With: 5-Speed Manual Transmission - GETRAG 221 - Transmission

Removal

| Special Tool(s) | |
|---|---|
| 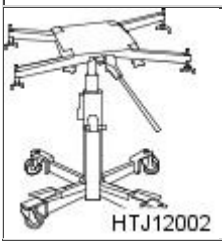 HTJ12002 | Powertrain Assembly Jack<br><br>HTJ1200-2 |

## Removal

1. Disconnect the battery ground cable.
   For additional information, refer to: Battery Disconnect and Connect (414-01 Battery, Mounting and Cables, General Procedures).
2. Remove the exhaust system.
   For additional information, refer to: Exhaust System - V8 4.2L Petrol/V8 S/C 4.2L Petrol/2.5L NA V6 - AJV6/3.0L NA V6 - AJ27 (309-00 Exhaust System, Removal and Installation).
3. CAUTIONS:

   Under no circumstances must the flexible coupling (or its fixings) be loosened or removed from the driveshaft.

   Make sure the front of the driveshaft does not put an excessive load on the center bearing. Failure to follow this instruction may result in damage to the vehicle.

   Detach the driveshaft from the transmission flange.

   - Mark the position of the driveshaft in relation to the transmission flange.
   - Mark the position of each nut and bolt in relation to the transmission flexible joint.

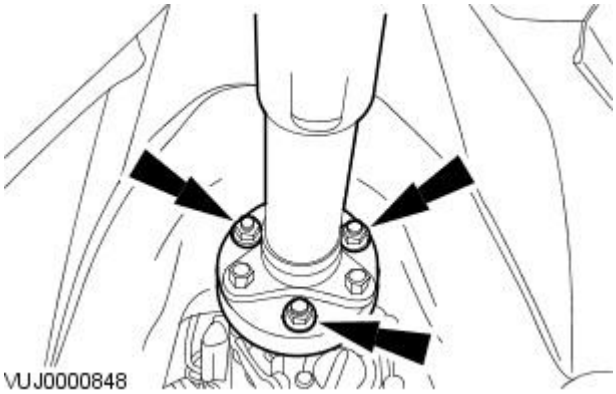


4. CAUTION: Make sure the front of the driveshaft does not put an excessive load on the center bearing. Failure to follow this instruction may result in damage to the vehicle.

   Using a suitable securing strap, reposition and support the driveshaft to the vehicle body.

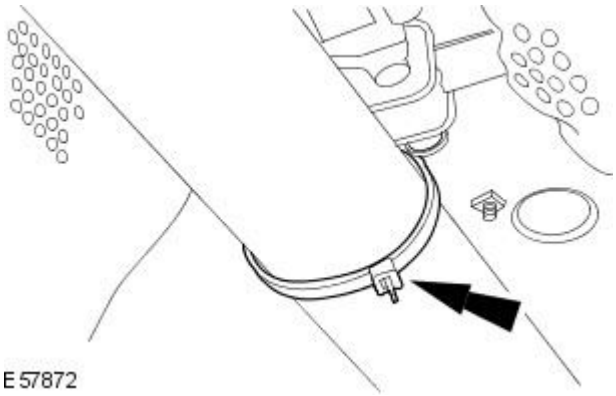


5. CAUTION: Make sure the weight of the transmission is evenly supported by the special tool. Failure to follow this instruction may result in damage to the vehicle.

   Install the special tool.

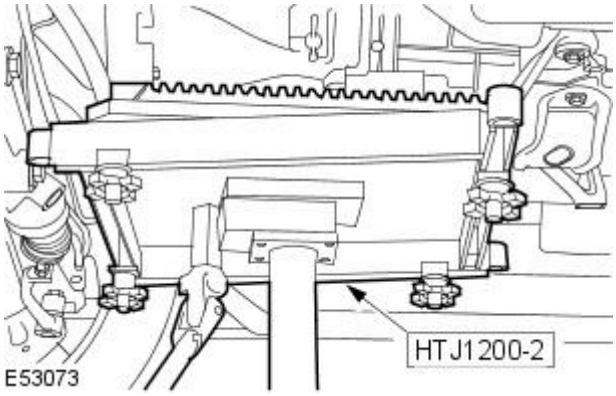


GETtheMANUALS.org

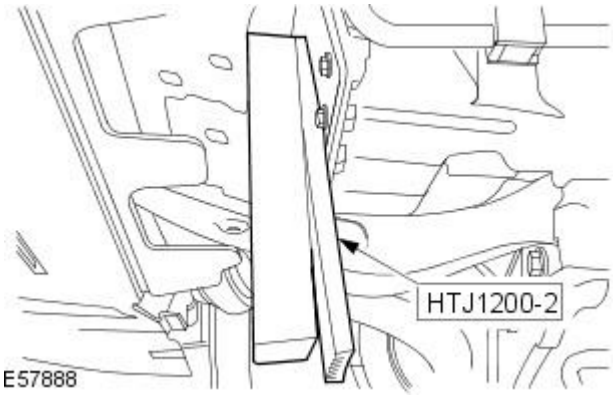


**6.** Install the rubber blocks supplied with special tool HTJ1200-2, between the front subframe and the oil pan.

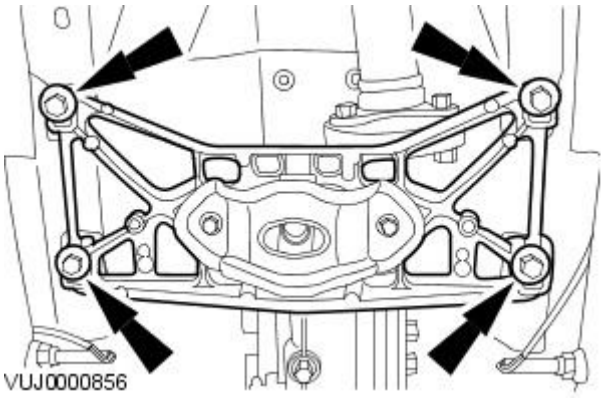


**7.** Detach the transmission support.

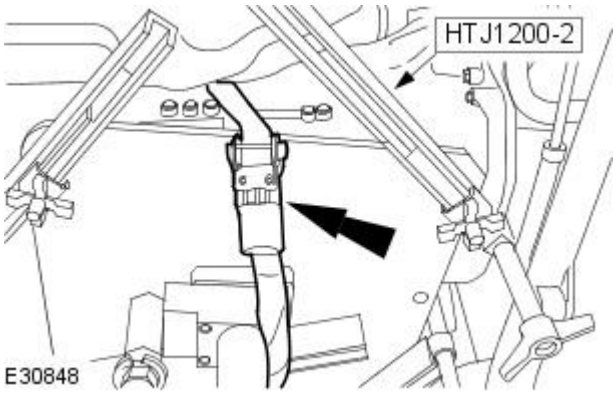


**8.** Using the special tool, lower the transmission to gain access to the transmission upper retaining bolts.

**9.** WARNING: Secure the transmission to the special tool, using a tie down strap. Failure to follow this instruction may result in personal injury.

Install the tie down strap.

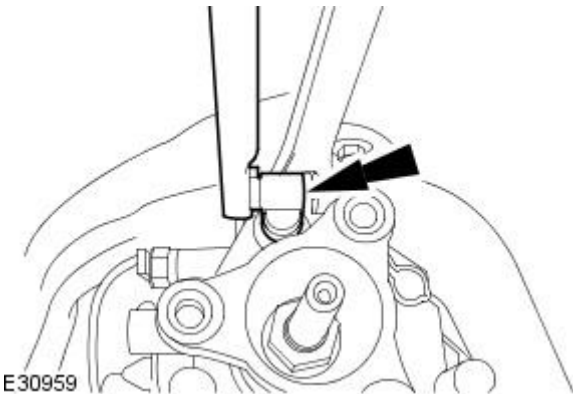


**10.** Detach the gearshift control shaft.

- Remove the gearshift control shaft locating pin.

GETtheMANUALS.org

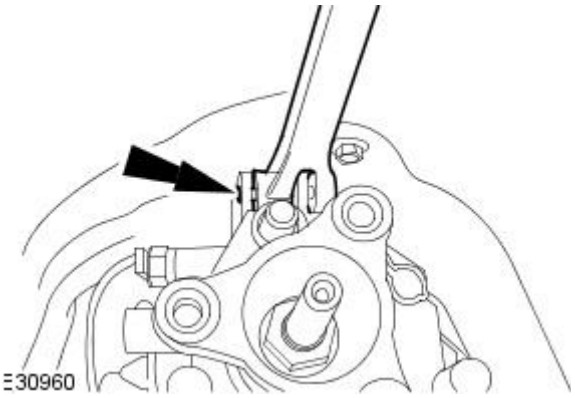


**11.** Detach the stabilizer rod.

- Remove the stabilizer rod locating pin.

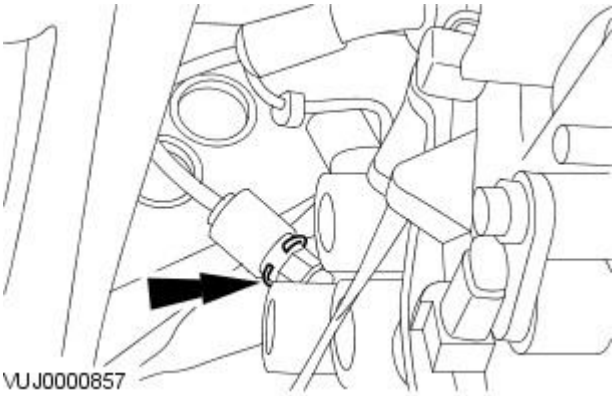


**12.** CAUTION: If brake fluid comes into contact with the paintwork, the affected area must be washed down immediately with cold water. Failure to follow this instruction may result in damage to the vehicle.

Detach the clutch slave cylinder supply tube.

- Clamp the hose to prevent loss of fluid.

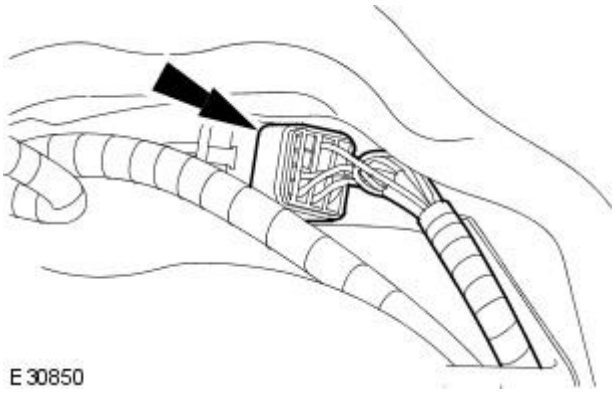


**13.** Disconnect the manual transmission electrical connector.

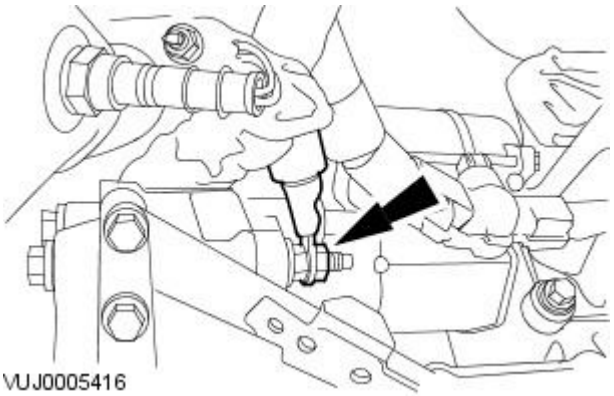


**14.** Detach the engine ground cable.

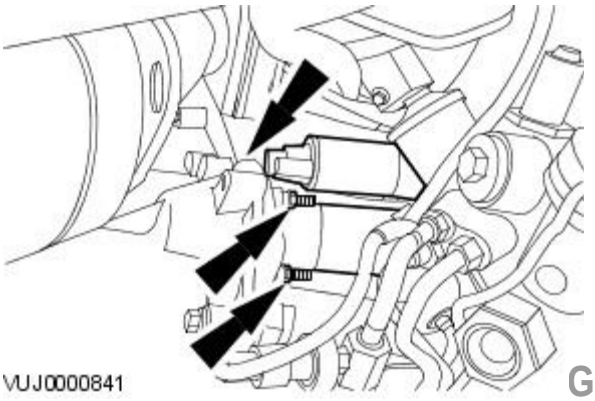


**15.** CAUTION: Make sure the starter motor is supported. Failure to follow this instruction may result in damage to the vehicle.

Detach the starter motor.

GETtheMANUALS.org

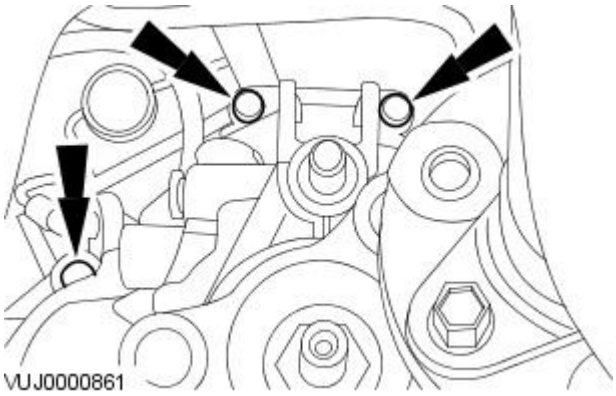


**16.** Remove the transmission retaining bolts.

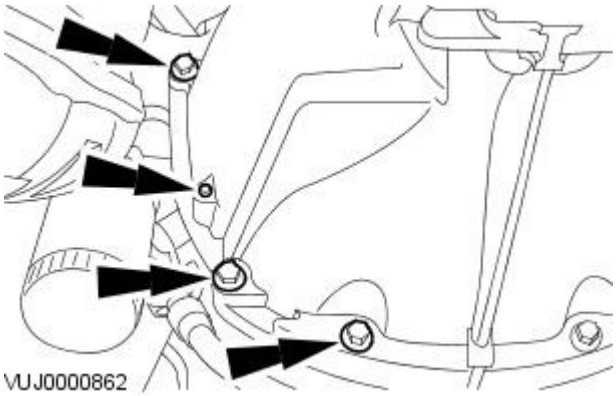


**17.** NOTE: Special tool shown removed for clarity.

Remove the transmission retaining bolts.

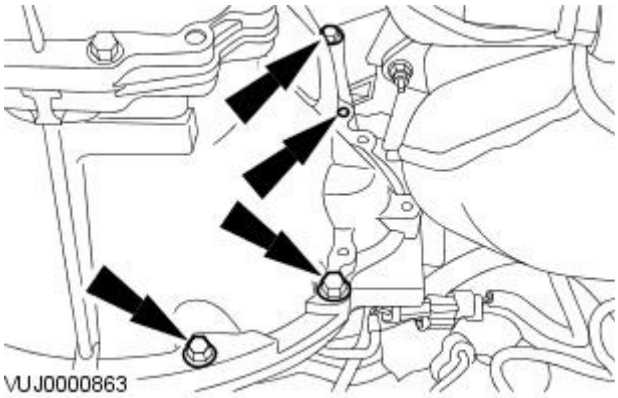


**18.** NOTE: Special tool shown removed for clarity.

Remove the transmission.

- Remove the transmission retaining bolts.
- Lower the transmission from the vehicle.

GETtheMANUALS.org

# Manual Transmission / Transaxle - Vehicles With: 5-Speed Manual Transmission - GETRAG 221 - Transmission

Installation

| Special Tool(s) | |
|---|---|
| HTJ12002 | Powertrain Assembly Jack<br><br>HTJ1200-2 |

## Installation

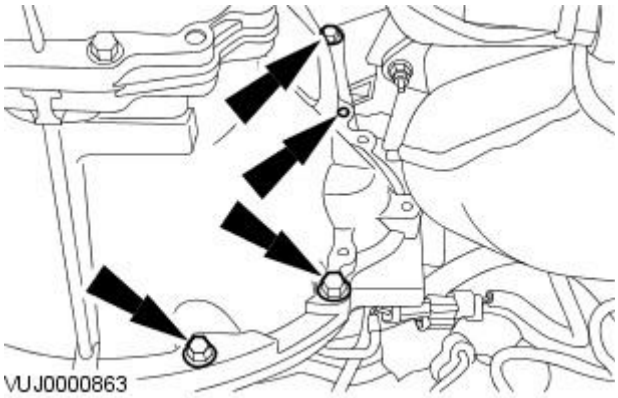


**1.** Install the transmission.

- Raise the transmission to the vehicle.
- Install the retaining bolts.
- Tighten to 47 Nm.

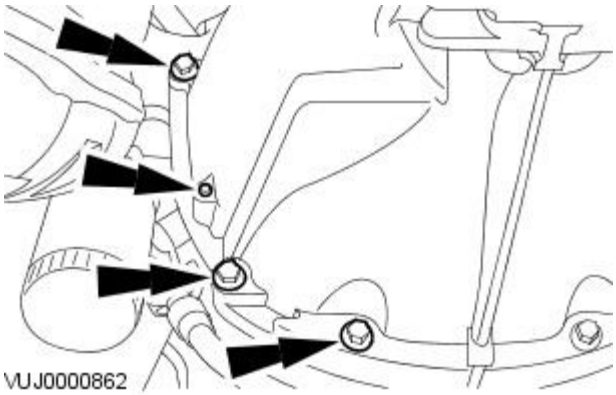


**2.** Install the transmission retaining bolts.

- Tighten to 47 Nm.

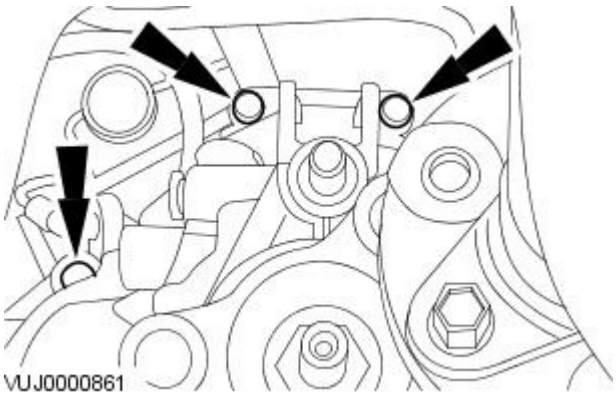


**3.** Install the transmission retaining bolts.

- Tighten to 47 Nm.

GETtheMANUALS.org

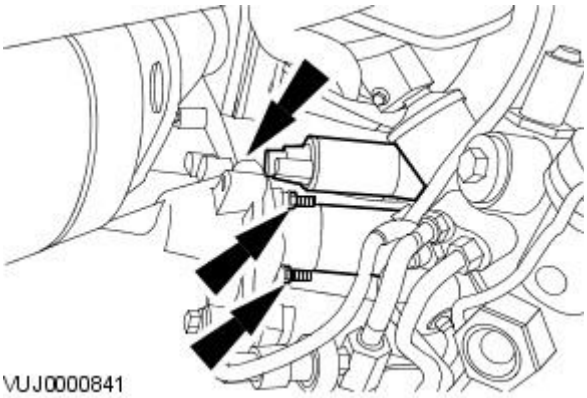


**4.** Attach the starter motor.

- Tighten to 25 Nm.

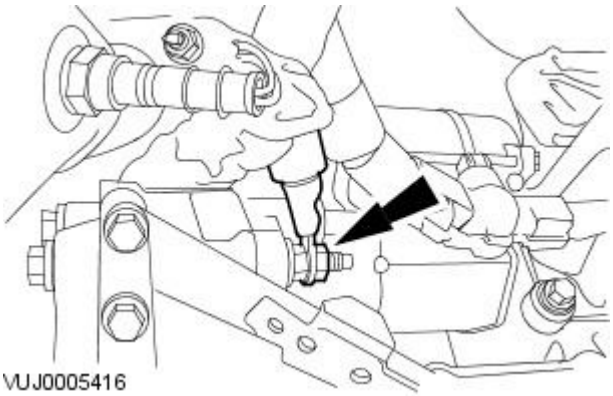


**5.** Attach the engine ground cable.

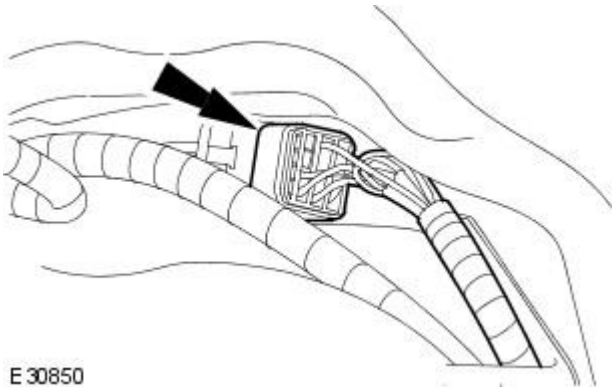


**6.** Connect the manaual transmission electrical connector.

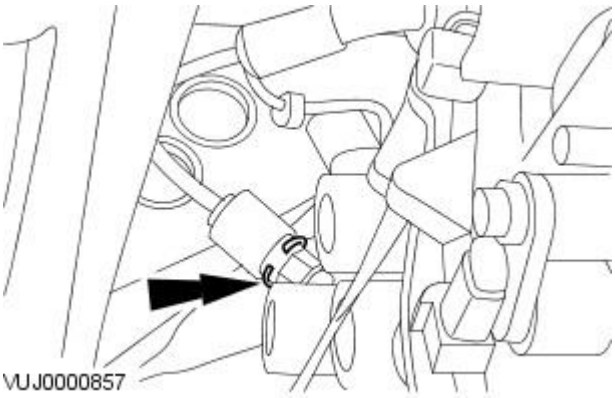


**7.** CAUTION: If brake fluid comes into contact with the paintwork, the affected area must be washed down immediately with cold water. Failure to follow this instruction may result in damage to the vehicle.

• NOTE: Install a new O-ring seal.

Attach the clutch slave cylinder supply tube.

- Remove the clamp from the hose.

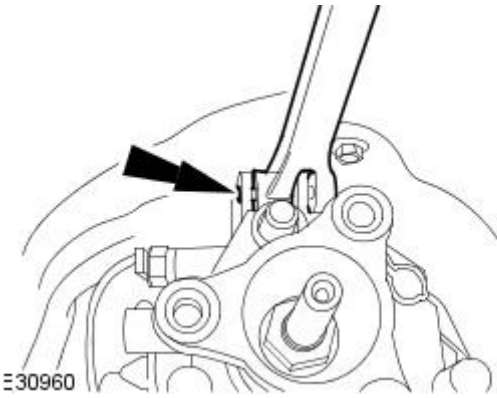


**8.** Attach the stabilizer rod.

- Install the stabilizer rod locating pin.

GETtheMANUALS.org

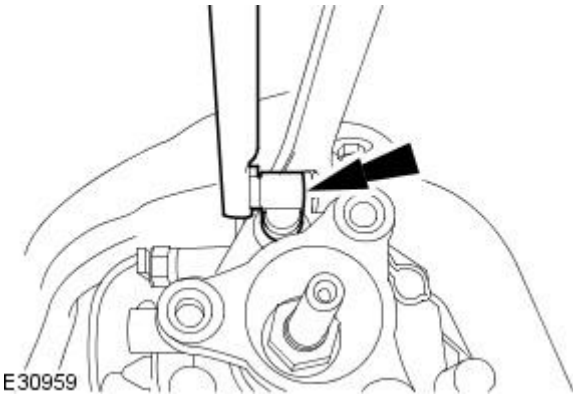


**9.** Attach the gearshift control shaft.

- Install the gearshift control shaft locating pin.

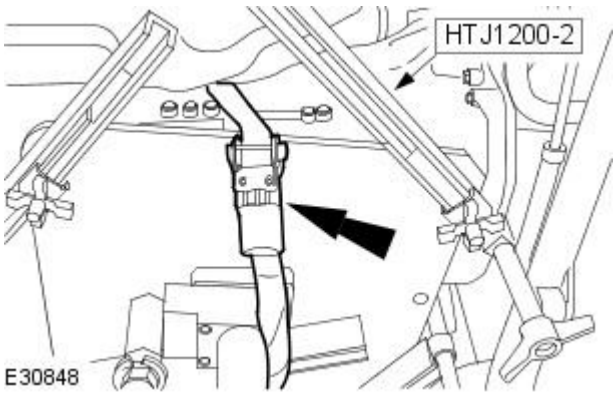


**10.** Remove the tie down strap.

**11.** Using the special tool, raise the transmission.

**12.** Remove the rubber blocks supplied with special tool HTJ1200-2.

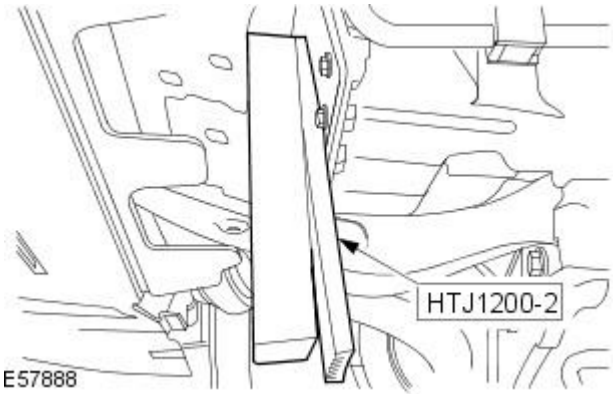


**13.** Install the transmission support retaining bolts.

- Tighten to 55 Nm.

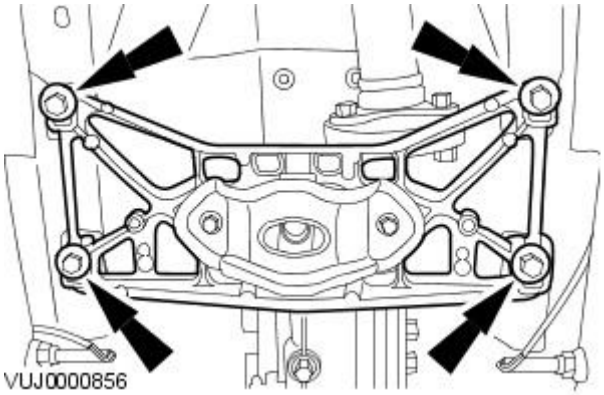


**14.** Remove the special tool.

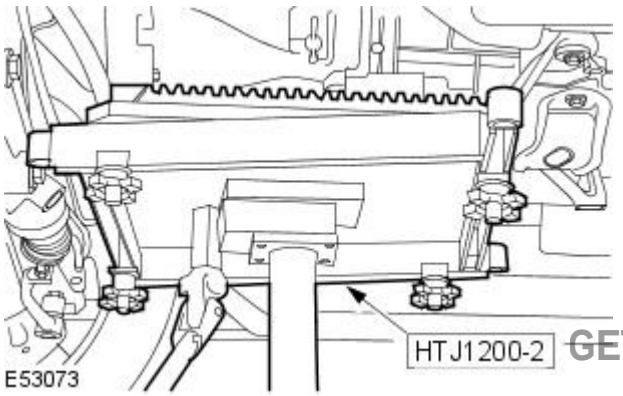


GETtheMANUALS.org

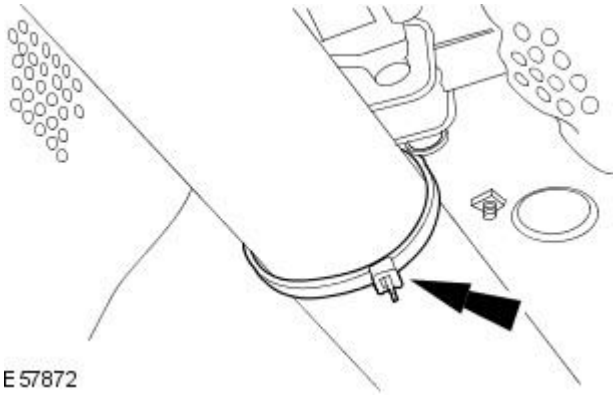


**15.** CAUTION: Make sure the front of the driveshaft does not put an excessive load on the center bearing. Failure to follow this instruction may result in damage to the vehicle.

Detach the driveshaft.

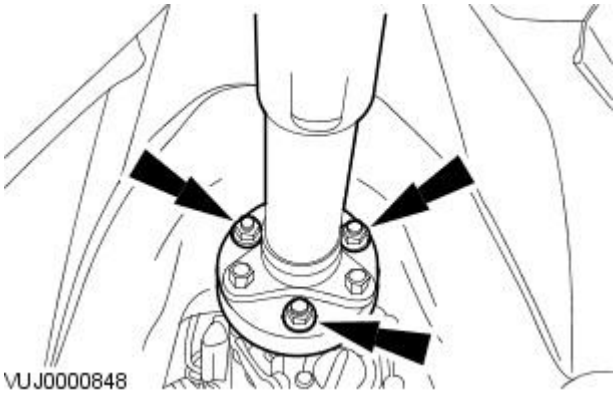


**16.** CAUTIONS:

Make sure the front of the driveshaft does not put an excessive load on the center bearing. Failure to follow this instruction may result in damage to the vehicle.

Make sure all components are installed to the position they were removed from. Failure to follow this instruction may result in damage to the vehicle.

Attach the driveshaft to the transmission flange.

- Tighten to 108 Nm.

**17.** Install the exhaust system.
For additional information, refer to: Exhaust System - V8 4.2L Petrol/V8 S/C 4.2L Petrol/2.5L NA V6 - AJV6/3.0L NA V6 - AJ27 (309-00 Exhaust System, Removal and Installation).

**18.** Carry out the clutch system bleeding procedure.
For additional information, refer to: Clutch System Bleeding (308-00 Manual Transmission/Transaxle and Clutch - General Information, General Procedures).

**19.** Connect the battery ground cable.
For additional information, refer to: Battery Connect (414-01 Battery, Mounting and Cables, General Procedures).

GETtheMANUALS.org

# Manual Transmission / Transaxle - Vehicles With: S6-53 6-Speed Manual Transmission -

**Lubricants, Fluids, Sealers and Adhesives**

| Description | Specification |
|---|---|
| Transmission Fluid | WSS-M2C932-A |
| Sealant | WSK-M26348-A6 |

**General Specifications**

| Item | Specification |
|---|---|
| Transmission fluid capacity | 1.60 Liters |

**Torque Specifications**

| Description | Nm | lb-ft | lb-in |
|---|---|---|---|
| Output shaft flange retaining nut | A | A | A |
| Reverse lamp switch | 18 | 13 | - |
| Support insulator to transmission retaining bolts | 55 | 41 | - |
| Support insulator to transmission support retaining bolts | 48 | 35 | - |
| Transmission drain plug | 35 | 26 | - |
| Transmission fill plug | 35 | 26 | - |
| Transmission flexible joint retaining bolts | 88 | 65 | - |
| Transmission housing retaining bolts | 40 | 30 | - |
| Transmission support retaining bolts | 48 | 35 | - |
| A = refer to the procedure for correct torque sequence | | | |

GETtheMANUALS.org

# Manual Transmission / Transaxle - Vehicles With: S6-53 6-Speed Manual Transmission - Manual Transmission

Description and Operation

Transmission Components

The transmission consists of the following:

Housing

The housing is a two piece die cast aluminium unit with an integral bell housing.

Shafts

The layshaft and main shaft are designed to reduce weight and are a hollow shaft construction.

Gears

Helical cut gears with a high-contact area are used. They are machined by grinding and honing to optimise noise levels.

Bearing

The input shaft and main shaft rotate on ball bearings. The layshaft rotates on a roller bearing at the rear and a double ball bearing at the front, with the idler gears rotating on needle roller bearings.

Internal shifting system

The six-speed transmission utilises aluminium die cast swing forks for the internal shift mechanism to achieve the axial motion needed in the sliding sleeve for changing gear, in contrast to the traditional fixed gear change rod structures used in most manually shifted transmissions. This has the benefit of reduced friction in the internal shifting mechanism.

The interlock prevents simultaneous engagement actions of several gears.

Position sensor

The Diagnostic Trouble Codes for the position sensor are retained in the electronic park brake module.

The position sensor located on the top of the transmission is a permanent magnetic linear contact-less sensor. The sensor consists of a soft magnetic core surrounded by a coil system, on each side of the sensor is a second short coil. A permanent magnet attached to the gearbox selector shaft guided close to the sensor causes localised saturation of the core.

The position of the saturated section along the sensor axis can be determined by the coil system, and transformed into a proportional voltage value.

The position switch will output a voltage to the electronic park brake module of approximately 4 volts when the transmission is in reverse, 1st, 3rd and 5th gears and will output a voltage of approximately 1 volt, when the transmission is in 2nd, 4th and 6th gears and when in neutral will output a voltage of approximately 2.5 volts.

Synchronisation

Fast and easy shift engagement of the transmission is ensured by the use of single, double and triple cone synchronisers. The lock-synchroniser mechanism lives up to the following requirements:

- Reduction of synchroniser forces
- Reduction of forces at the central selector shaft

1st gear is equipped with a triple syncroniser unit where 2nd, 3rd, 4th and reverse have dual cone syncroniser and 5th and 6th gears have single cone syncronisers.

GETtheMANUALS.org

Published: 11-May-2011

# Manual Transmission / Transaxle - Vehicles With: S6-53 6-Speed Manual Transmission - Manual Transmission

Diagnosis and Testing

For additional information, refer to Section 308-00 Manual Transmission/Transaxle and Clutch - General Information

GETtheMANUALS.org

# Manual Transmission/Transaxle - Vehicles With: S6-53 6-Speed Manual Transmission - Drain Procedure

General Procedures

1. Raise and support the vehicle.
   For additional information, refer to: Lifting (100-02 Jacking and Lifting, Description and Operation).
2. Remove the transmission undertray.

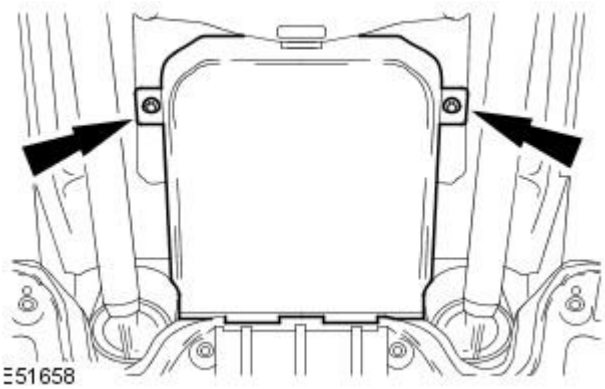


3. Remove the transmission fluid filler plug.

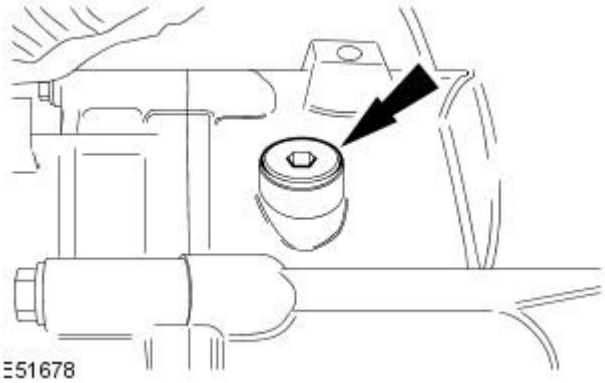


4. Remove the transmission fluid drain plug.
   - Drain the transmission fluid into a suitable container.

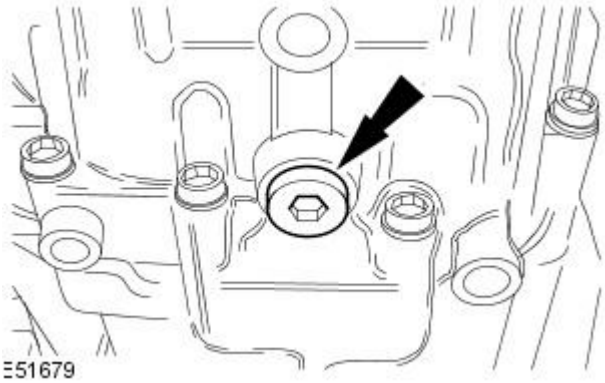


5. Install the transmission fluid drain plug.
   - Tighten to 35 Nm.

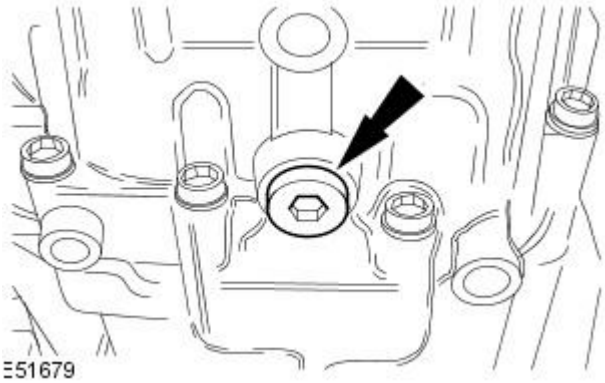


6. Carry out the transmission fluid fill procedure.
   For additional information, refer to: Fill Procedure (308-03B Manual Transmission/Transaxle - Vehicles With: S6-53 6-Speed Manual Transmission, General Procedures).

GETtheMANUALS.org

# Manual Transmission / Transaxle - Vehicles With: S6-53 6-Speed Manual Transmission - Fill Procedure

General Procedures

**1.** Drain the transmission.
For additional information, refer to: Drain Procedure (308-03B Manual Transmission/Transaxle - Vehicles With: S6-53 6-Speed Manual Transmission, General Procedures).

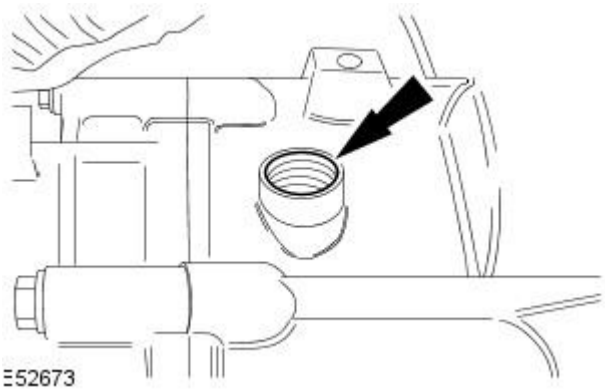


**2.** CAUTION: When filling the transmission with fluid, make sure the transmission contains the specified quantity only. Failure to follow this instruction may result in damage to the vehicle.

- NOTE: Use transmission fluid meeting Jaguar specification.
- NOTE: The transmission fluid filler plug hole is not a level indicator.

Fill the transmission with transmission fluid through the transmission fluid filler plug hole.

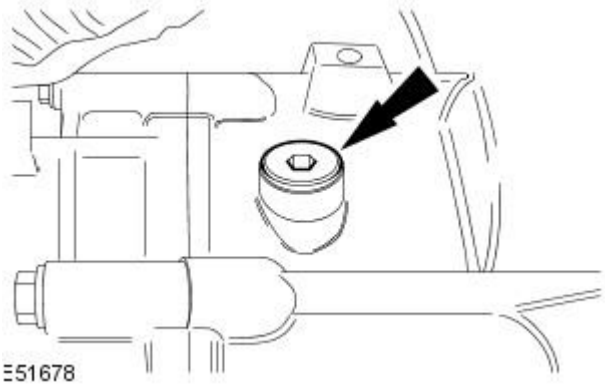


**3.** Install the transmission fluid filler plug.

- Tighten to 35 Nm.

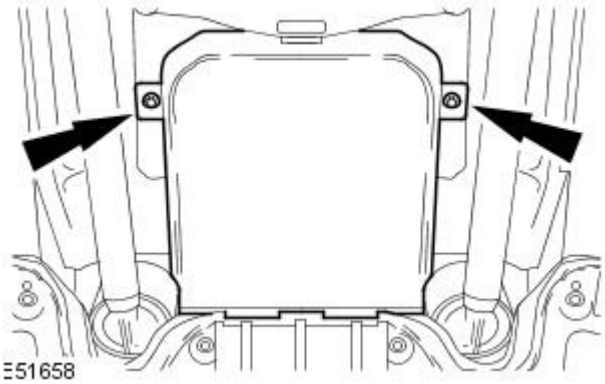


**4.** Install the transmission undertray.

**5.** Lower the vehicle.

GETtheMANUALS.org

# Manual Transmission / Transaxle - Vehicles With: S6-53 6-Speed Manual Transmission - Countershaft Seal

In-vehicle Repair

| Special Tool(s) | |
|---|---|
| E52742 | Drill and Stop Seal Remover<br><br>308-617 |
| E52741 | Remover Seals<br><br>308-615 |
| E52743 | Installer Layshaft Seal<br><br>308-620 |
| 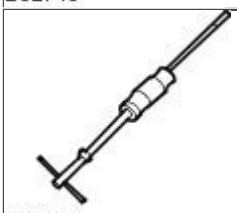 100012 | Slide Hammer<br><br>100-012 |

**General Equipment**

| |
|---|
| Drill |

## Removal

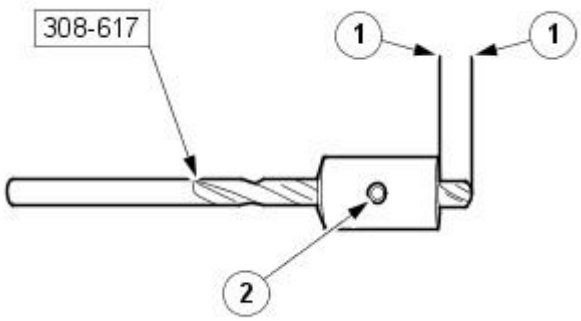


E52757

1. Drain the transmission.
   For additional information, refer to: Drain Procedure (308-03B Manual Transmission/Transaxle - Vehicles With: S6-53 6-Speed Manual Transmission, General Procedures).
2. Remove the transmission. For additional information, refer to
   For additional information, refer to: Transmission (308-03B Manual Transmission/Transaxle - Vehicles With: S6-53 6-Speed Manual Transmission, Removal).
3. CAUTION: Make sure the special tool stop is set 5 mm from the drill tip. Failure to follow this instruction may result in damage to the vehicle.

   Adjust special tool stop to 5 mm from the drill tip if required.

   1. Make sure the special tool stop is set 5 mm from the drill tip.
   2. Adjust special tool stop to 5 mm from the drill tip if required.

GETtheMANUALS.org

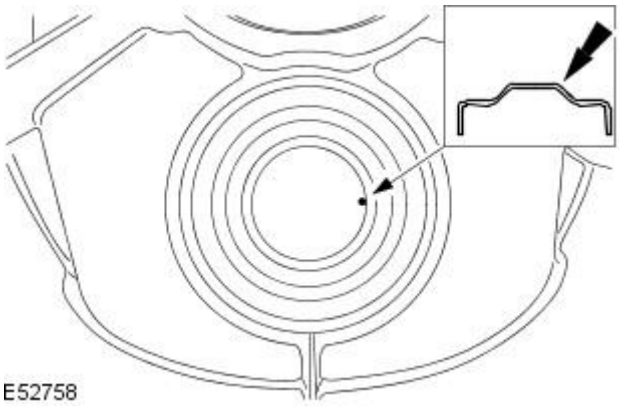


**4.** CAUTION: Make sure the countershaft seal is drilled in the area shown. Failure to follow this instruction may result in damage to the vehicle.

Drill the countershaft seal in the area shown.

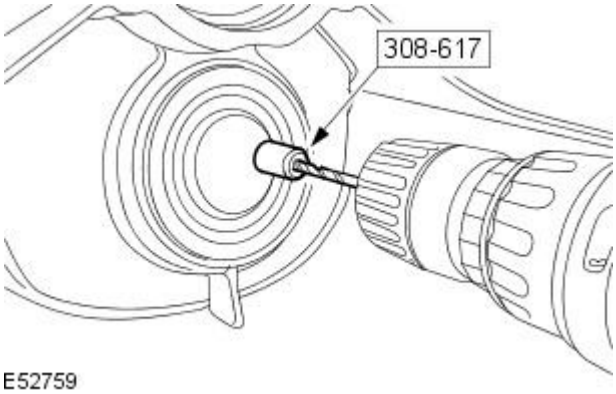


**5.** CAUTION: Make sure the countershaft seal is drilled in the area shown. Failure to follow this instruction may result in damage to the vehicle.

Using the special tool, drill the countershaft seal.

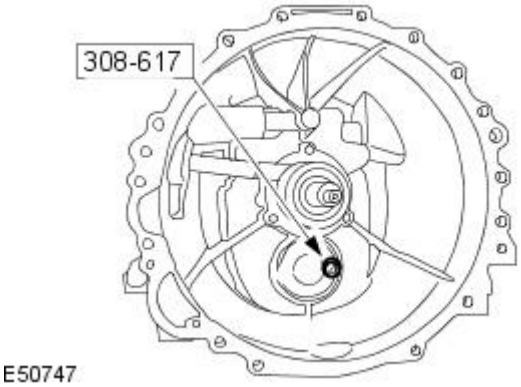


**6.** Install the special tool to the countershaft seal.

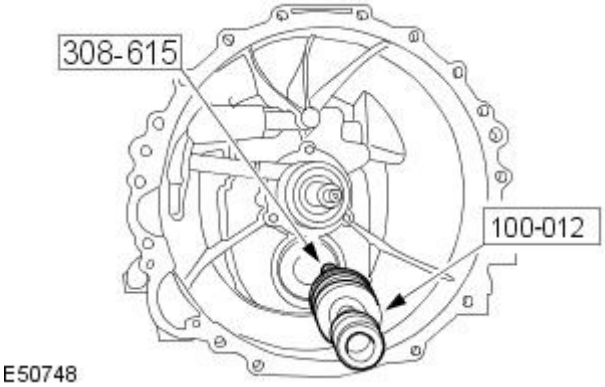


**7.** NOTE: Repeat steps 3-6 if required to the remove countershaft seal.

Using the special tool, remove the countershaft seal.

## Installation

GETtheMANUALS.org

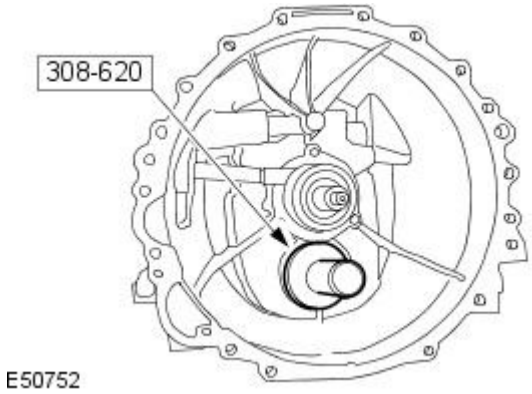


1. Using the special tool, install the countershaft seal.

2. Install the transmission. For additional information, refer to
   For additional information, refer to: Transmission (308-03B Manual Transmission/Transaxle - Vehicles With: S6-53 6-Speed Manual Transmission, Installation).

3. Fill the transmission.
   For additional information, refer to: Fill Procedure (308-03B Manual Transmission/Transaxle - Vehicles With: S6-53 6-Speed Manual Transmission, General Procedures).

GETtheMANUALS.org

# Manual Transmission / Transaxle - Vehicles With: S6-53 6-Speed Manual Transmission - Gearshift Control Shaft Seal

In-vehicle Repair

| Special Tool(s) | |
|---|---|
| E52750 | Installer Selector Shaft Seal<br><br>308-622 |
| E52749 | Remover Selector Shaft Seal<br><br>308-621 |

## Removal

**1.** Drain the transmission.
For additional information, refer to: Drain Procedure (308-03B Manual Transmission/Transaxle - Vehicles With: S6-53 6-Speed Manual Transmission, General Procedures).

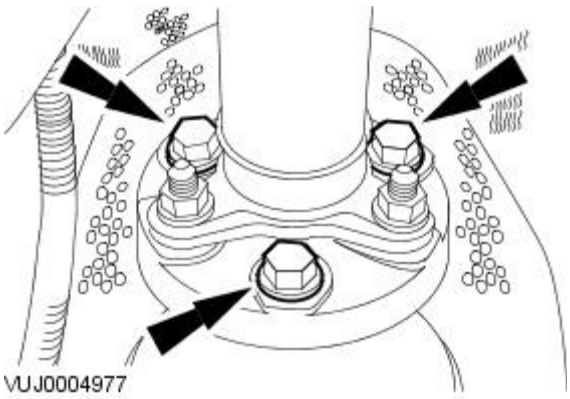
VUJ0004977

**2.** CAUTIONS:

Under no circumstances must the flexible coupling (or its fixings) be loosened or removed from the driveshaft. Failure to follow this instruction may result in damage to the vehicle.

Make sure the front of the driveshaft does not put an excessive load on the center bearing. Failure to follow this instruction may result in damage to the vehicle.

Detach the driveshaft from the transmission flange.

- Mark the position of the driveshaft in relation to the transmission flange.
- Mark the position of each nut and bolt in relation to the transmission flexible joint.

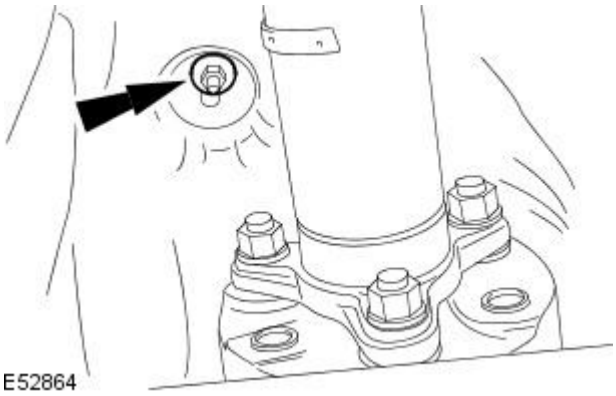
E52864

**3.** Loosen the heat shield retaining nut.

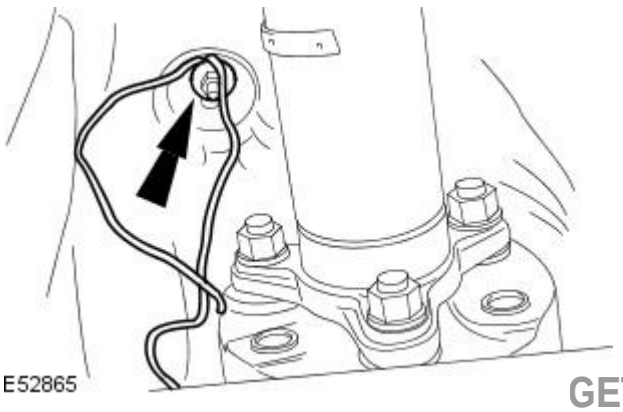
E52865

**4.** Install suitable cord to the heat shield retaining nut stud.

- Tighten the retaining nut.

GETtheMANUALS.org

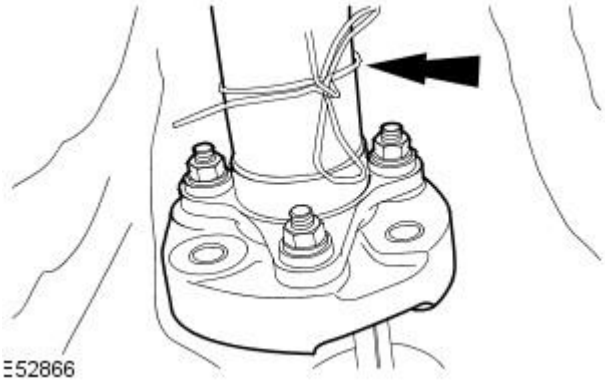


**5.** Reposition the driveshaft.

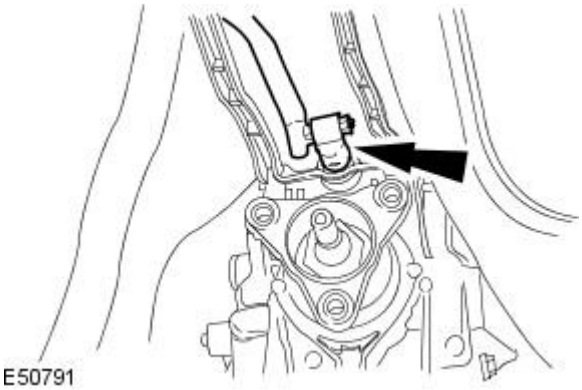


**6.** Detach the gear shift linkage selector rod.

- Remove the gear shift linkage selector rod retaining clip.

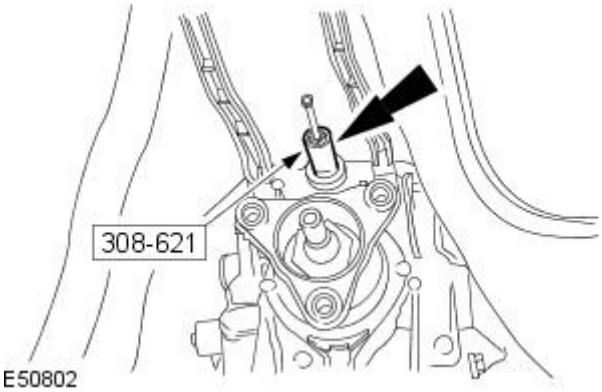


**7.** Install the special tool.

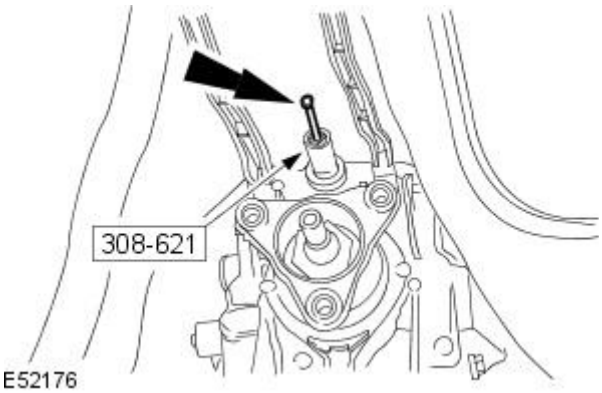


**8.** Using the special tool, remove the gearshift control shaft seal.

## Installation

GETtheMANUALS.org

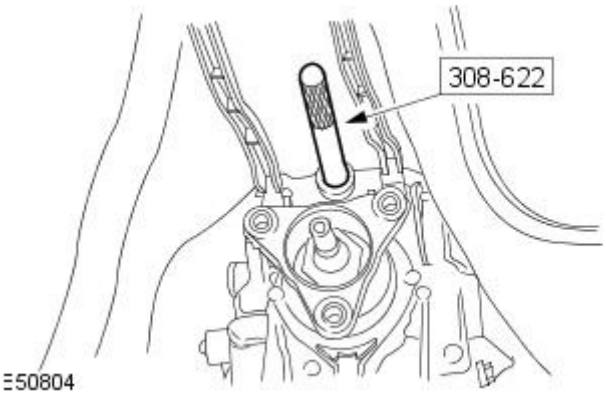


**1.** Using the special tool, install the gearshift control shaft seal.

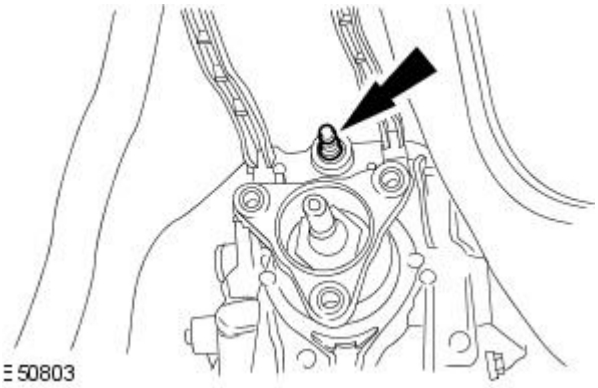


**2.** Make sure the seal is correctly installed.

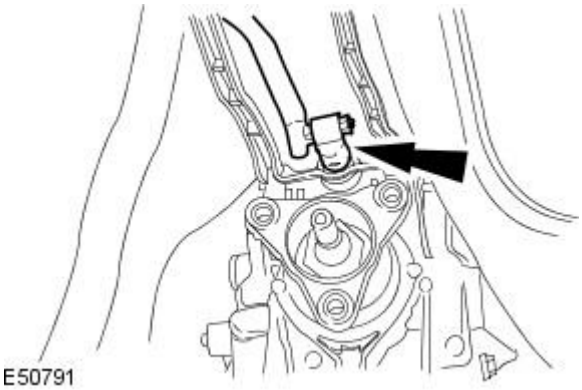


**3.** Attach the gear shift linkage selector rod.

- Install the gear shift linkage selector rod retaining clip.

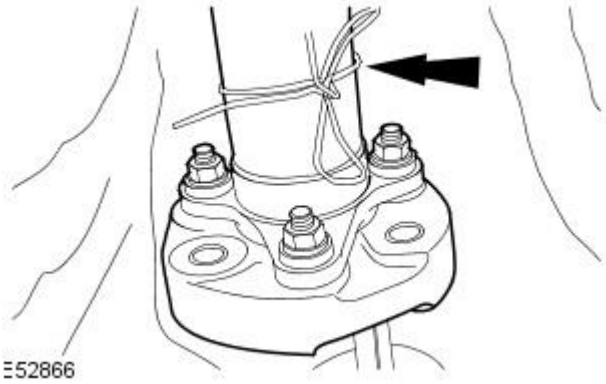


**4.** CAUTION: Make sure the front of the driveshaft does not put an excessive load on the center bearing. Failure to follow this instruction may result in damage to the vehicle.

Reposition the driveshaft.

- Undo the cord.

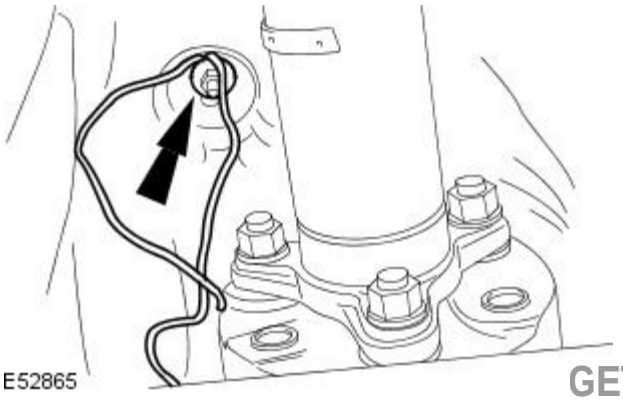


**5.** Loosen the retaining nut.

- Remove the cord from the heat shield retaining nut stud.

GETtheMANUALS.org

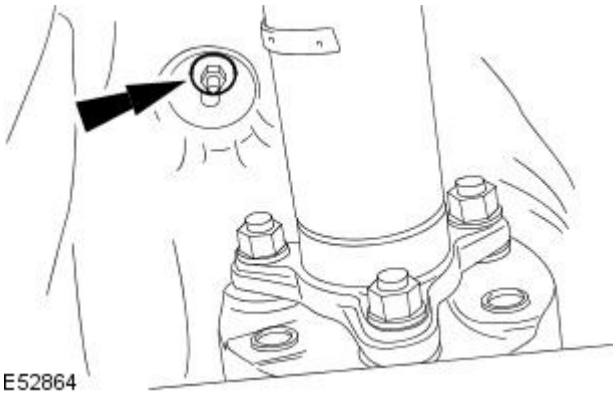


**6.** Tighten the retaining nut.

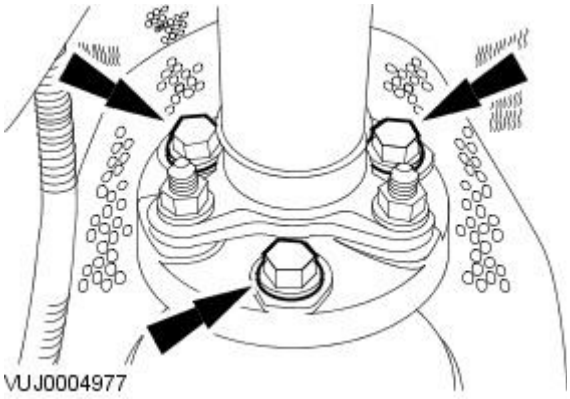


**7.** CAUTIONS:

Make sure the front of the driveshaft does not put an excessive load on the center bearing. Failure to follow this instruction may result in damage to the vehicle.

Make sure all components are installed to the position they were removed from. Failure to follow this instruction may result in damage to the vehicle.

Attach the driveshaft to the transmission flange.

- Tighten to 88 Nm.

**8.** Fill the transmission.
For additional information, refer to: Fill Procedure (308-03B Manual Transmission/Transaxle - Vehicles With: S6-53 6-Speed Manual Transmission, General Procedures).

GETtheMANUALS.org

# Manual Transmission/Transaxle - Vehicles With: S6-53 6-Speed Manual Transmission - Input Shaft Seal

In-vehicle Repair

| Special Tool(s) | |
|---|---|
| E52744 | Installer Input Shaft Seal<br><br>308-618 |
| E52741 | Remover Seals<br><br>308-615 |
| 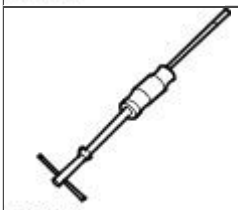 100012 | Slide Hammer<br><br>100-012 |

## Removal

1. Drain the transmission.
   For additional information, refer to: Drain Procedure (308-03B Manual Transmission/Transaxle - Vehicles With: S6-53 6-Speed Manual Transmission, General Procedures).
2. Remove the clutch slave cylinder. For additional information, refer to For additional information, refer to: Clutch Slave Cylinder (308-02 Clutch Controls, Removal and Installation).
3. Locate the two sealed holes in the input shaft seal face.
   - These holes can be identified by two opposed hollows in the seal face.
4. Install the special tool to the input shaft seal.

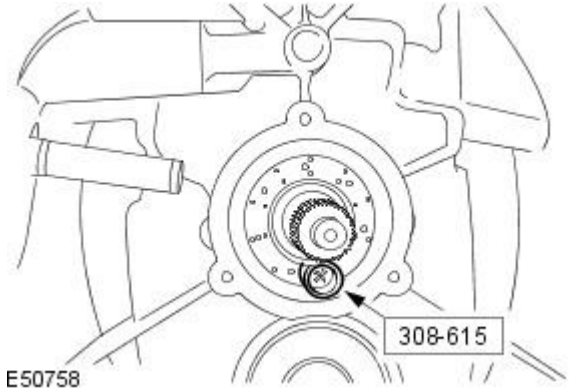

E50758

5. Using the special tool, remove the input shaft seal.

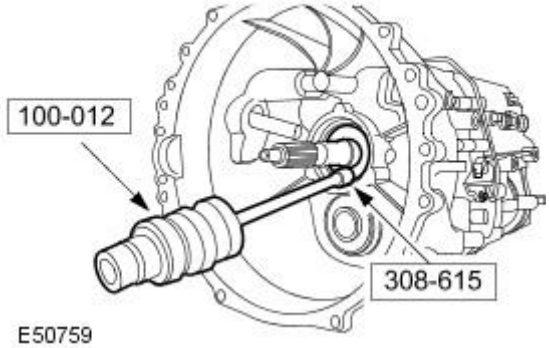

E50759

## Installation

GETtheMANUALS.org

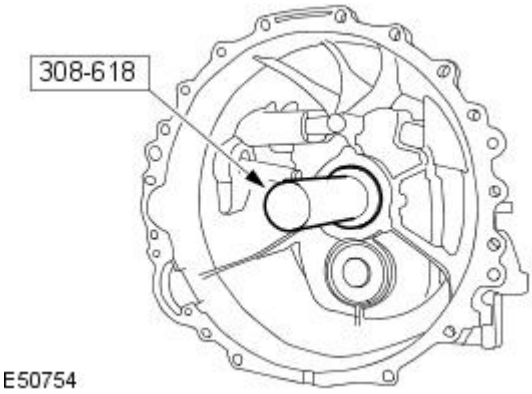


1. Using the special tool, install the input shaft seal.

2. Install the clutch slave cylinder. For additional information, refer to For additional information, refer to: Clutch Slave Cylinder (308-02 Clutch Controls, Removal and Installation).

3. Fill the transmission.
For additional information, refer to: Fill Procedure (308-03B Manual Transmission/Transaxle - Vehicles With: S6-53 6-Speed Manual Transmission, General Procedures).

GETtheMANUALS.org

# Manual Transmission / Transaxle - Vehicles With: S6-53 6-Speed Manual Transmission - Output Shaft Seal

In-vehicle Repair

| Special Tool(s) | |
|---|---|
| 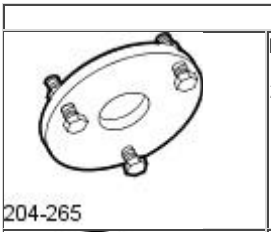 204-265 | Flange Remover<br>204-265 |
| 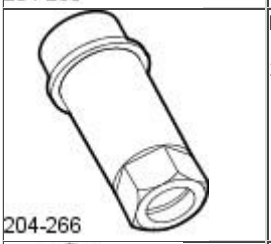 204-266 | Flange Remover<br>204-266 |
| 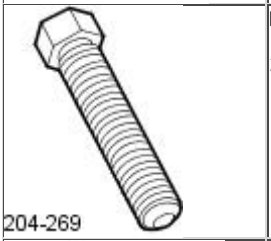 204-269 | Flange Remover Forcing Screw<br>204-269 |
| 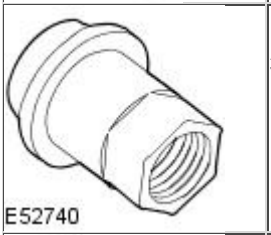 E52740 | Installer - Boss Output Flange<br>308-624 |
| 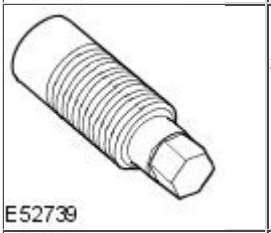 E52739 | Installer - Centre Output Flange<br>308-623 |
| 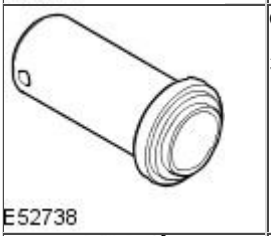 E52738 | Output Shaft Seal Installer<br>308-619 |
| 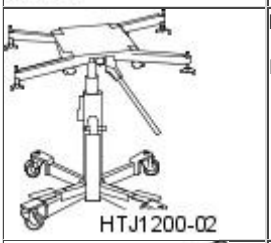 HTJ1200-02 | Powertrain Assembly Jack<br>HTJ1200-2 |
| 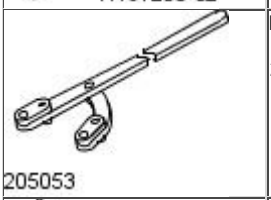 205053 | Propeller Shaft Flange Wrench<br>205-053 |
| 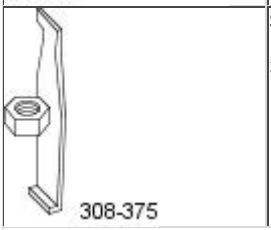 308-375 | Seal Remover Input and Output<br>308-375 |

GETtheMANUALS.org

| | |
|---|---|
| 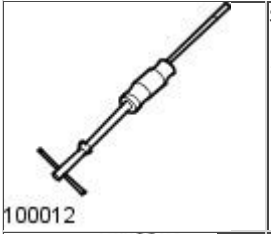 100012 | Slide Hammer<br><br>100-012 |
| 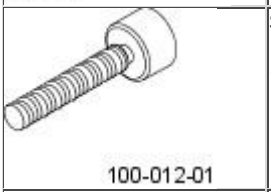 100-012-01 | Slide Hammer Adaptor<br><br>100-012-01 |
| 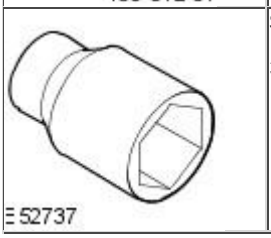 E52737 | Socket Output Flange Remover/Installer<br><br>308-616 |

**General Equipment**

| |
|---|
| Hot Air Gun |
| Digital Multimeter with Thermal Pick-up |

## Removal

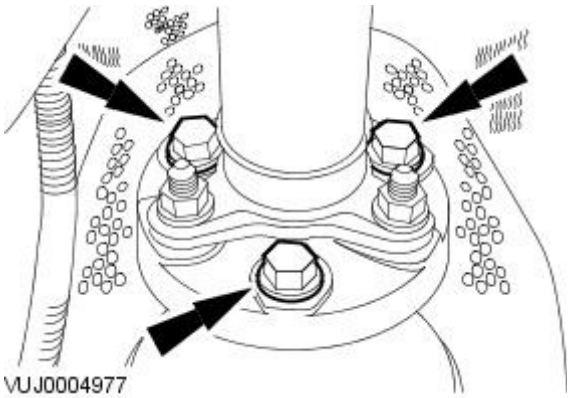
VUJ0004977

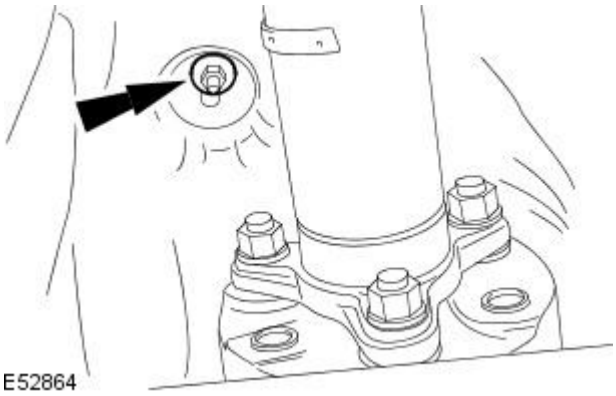
E52864

**1.** Drain the transmission.
For additional information, refer to: Drain Procedure (308-03B Manual Transmission/Transaxle - Vehicles With: S6-53 6-Speed Manual Transmission, General Procedures).

**2.** CAUTIONS:

Under no circumstances must the flexible coupling (or its fixings) be loosened or removed from the driveshaft. Failure to follow this instruction may result in damage to the vehicle.

Make sure the front of the driveshaft does not put an excessive load on the center bearing. Failure to follow this instruction may result in damage to the vehicle.

Detach the driveshaft from the transmission flange.

- Mark the position of the driveshaft in relation to the transmission flange.
- Mark the position of each nut and bolt in relation to the transmission flexible joint.

**3.** Loosen the heat shield retaining nut.

GETtheMANUALS.org

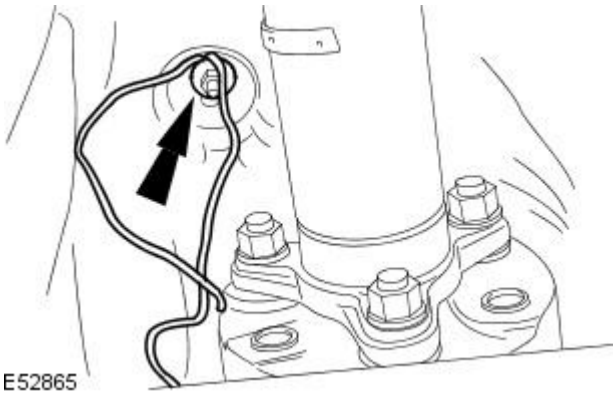


**4.** Install suitable cord to the heat shield retaining nut stud.

- Tighten the retaining nut.

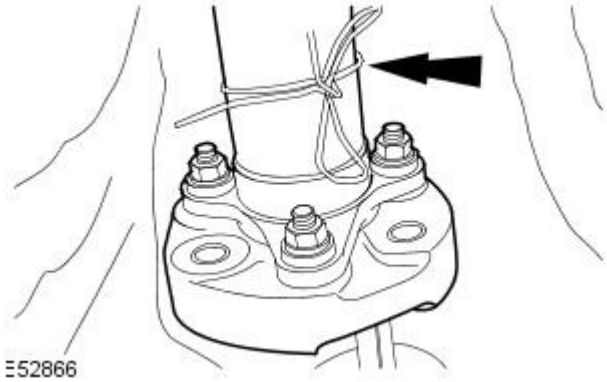


**5.** Reposition the driveshaft.

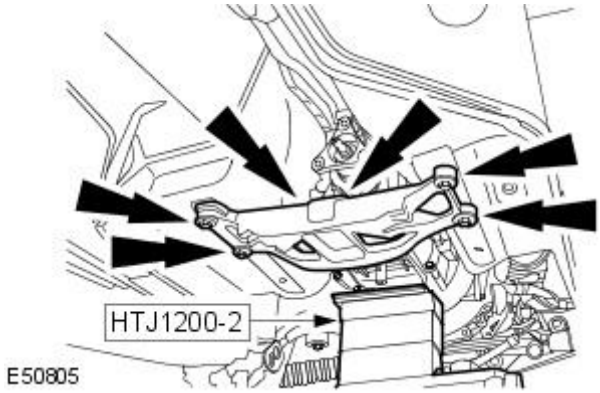


**6.** Using the special tool, remove the transmission support.

- Lower the transmission to a suitable height.

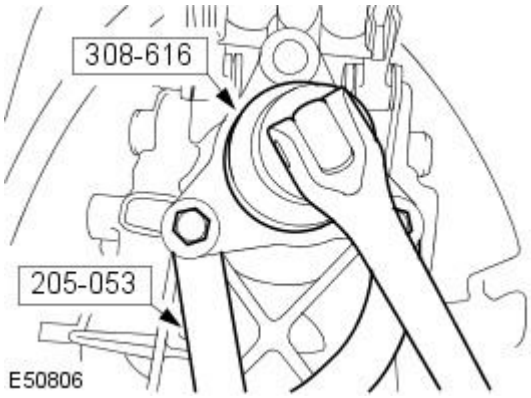


**7.** Using the special tools, remove and discard the output shaft flange retaining nut.

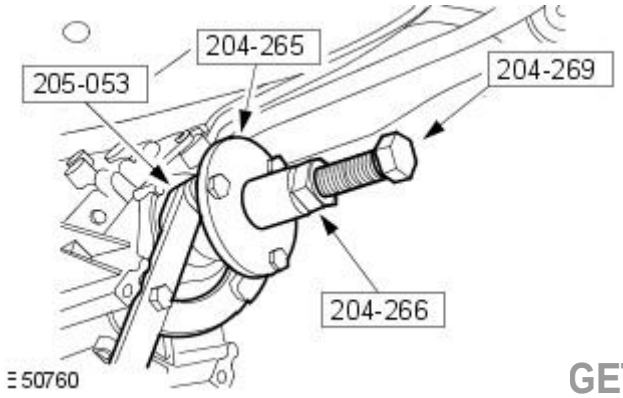


**8.** Using the special tools, remove the output shaft flange.

GETtheMANUALS.org

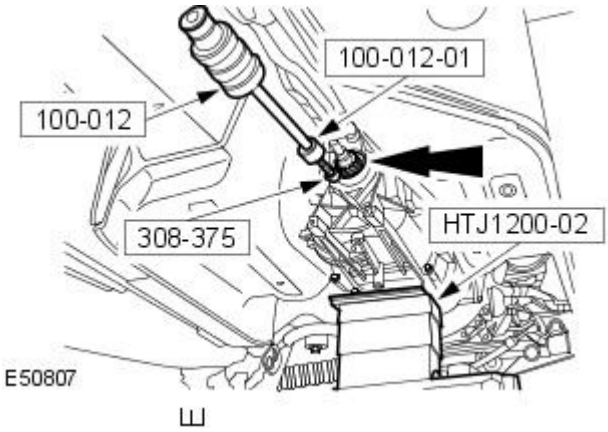


**9.** Using the special tools, remove the output shaft seal.

## Installation

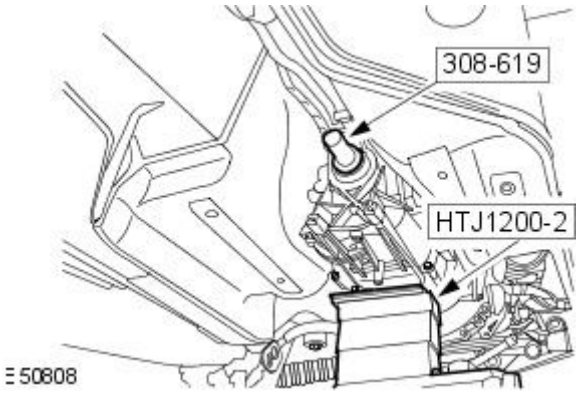


**1.** Using the special tool, install the output shaft seal.

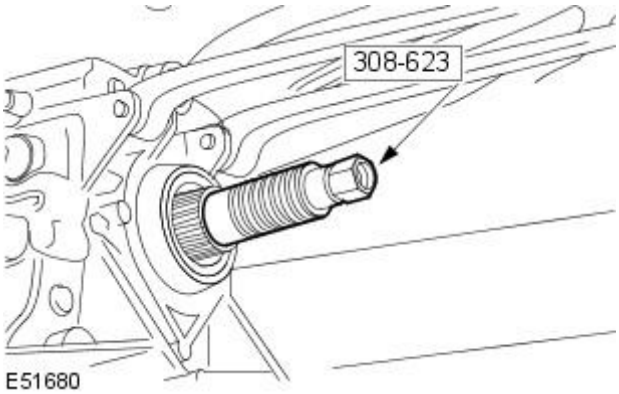


**2.** Install the special tool to the output shaft.

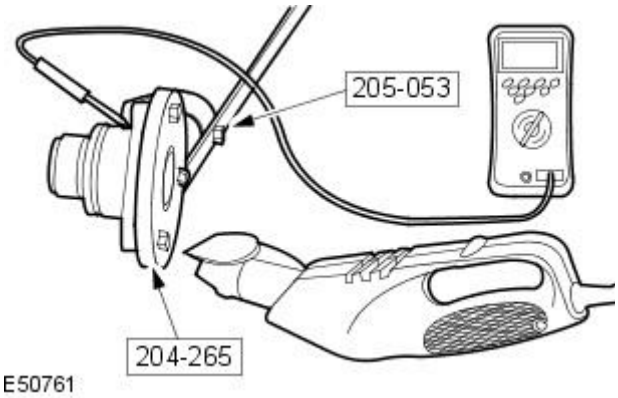


**3.** Install the special tools to the output shaft flange.

GETtheMANUALS.org

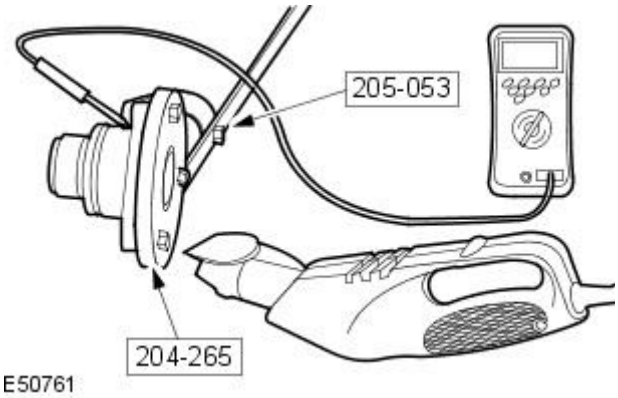


**4.** CAUTION: Make sure when installing the output shaft flange, the output shaft flange is heated to a temperature between **100 °C** and **120 °C**. Failure to follow this instruction, may result in damage to the vehicle.

Using suitable equipment, heat the output shaft flange to a temperature between **100 °C** and **120 °C**.

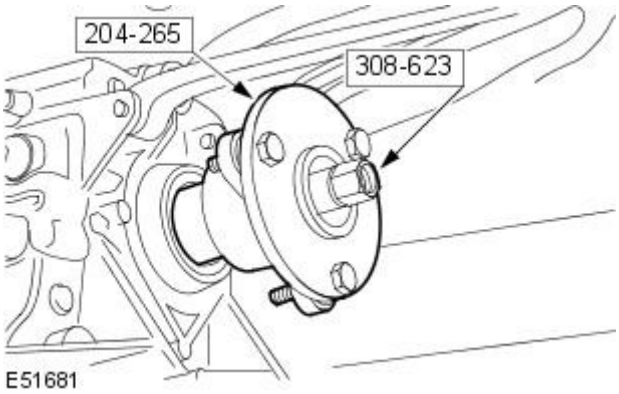


**5.** CAUTION: Make sure when installing the output shaft flange, the output shaft flange is heated to a temperature between **100 °C** and **120 °C**. Failure to follow this instruction, may result in damage to the vehicle.

Align the output shaft flange to the output shaft.

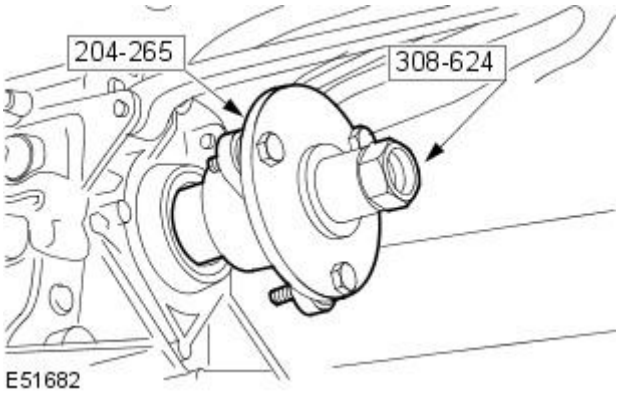


**6.** CAUTIONS:

Make sure when installing the output shaft flange, the output shaft flange is heated to a temperature between **100 °C** and **120 °C**. Failure to follow this instruction, may result in damage to the vehicle.

Make sure the output shaft flange is fully installed to the output shaft. Failure to follow this instruction, may result in damage to the vehicle.

Using the special tool install the output shaft flange to the output shaft.

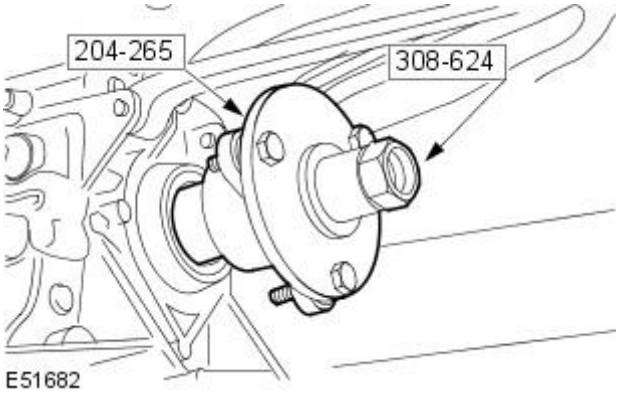


**7.** Remove the special tools.

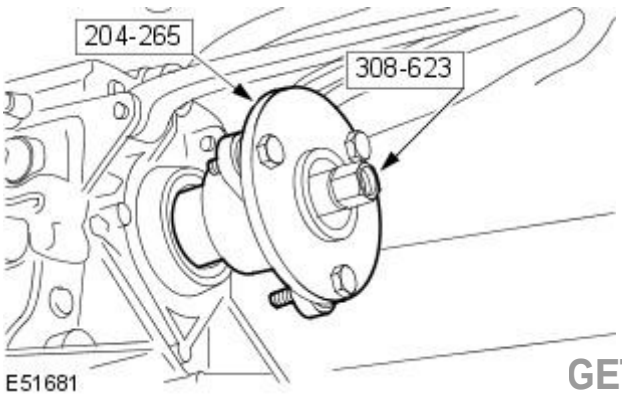


**8.** Remove the special tools.

GETtheMANUALS.org

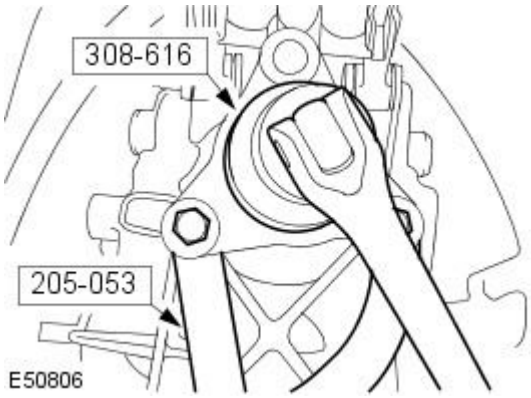


**9.** Using the special tools, install a new output shaft flange retaining nut.

- Tighten to 145 Nm.

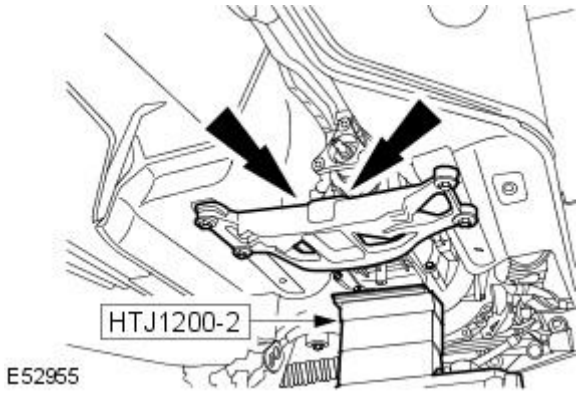


**10.** Install the transmission support.

- Using the special tool, raise the transmission.
- Tighten to 55 Nm.

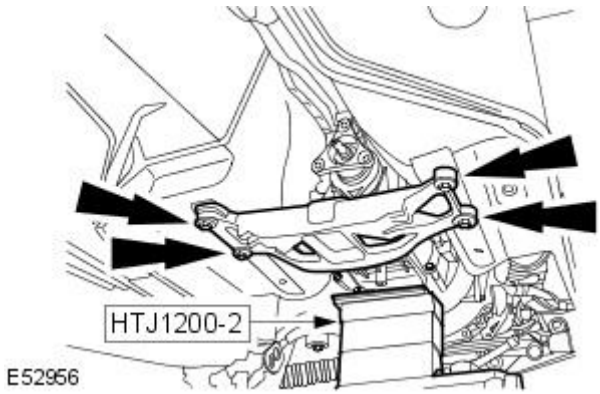


**11.** Tighten to 48 Nm.

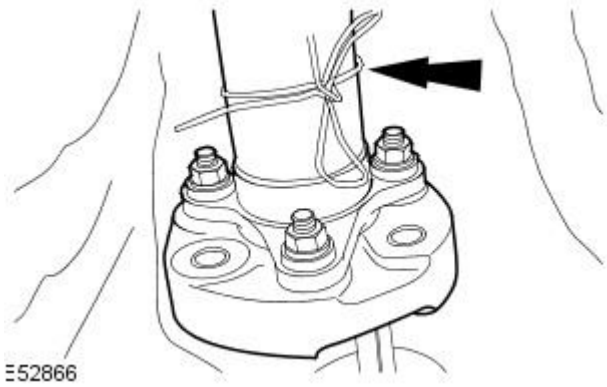


**12.** CAUTION: Make sure the front of the driveshaft does not put an excessive load on the center bearing. Failure to follow this instruction may result in damage to the vehicle.

Reposition the driveshaft.

- Undo the cord.

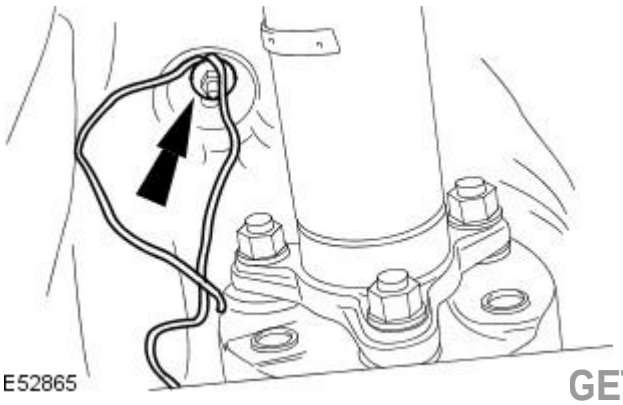


**13.** Loosen the retaining nut.

- Remove the cord from the heat shield retaining nut stud.

GETtheMANUALS.org

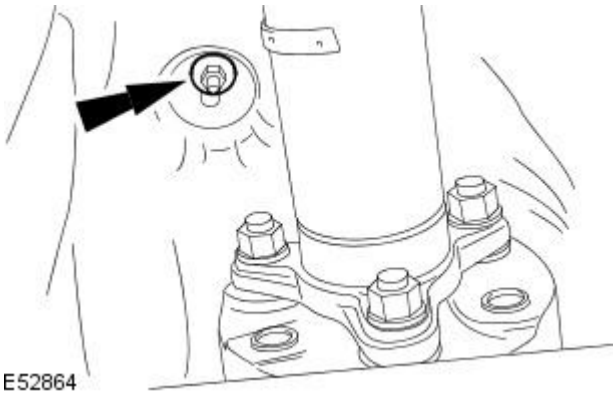


**14.** Tighten the retaining nut.

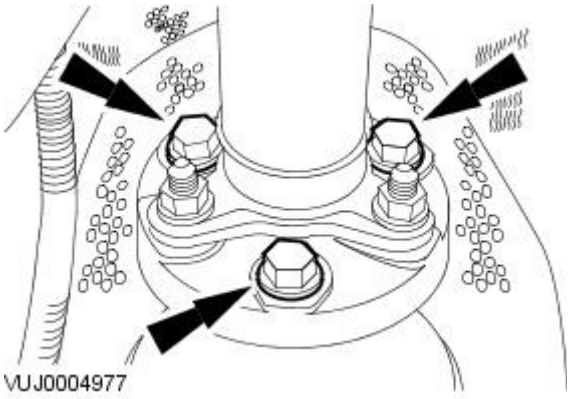


**15.** CAUTIONS:

Make sure the front of the driveshaft does not put an excessive load on the center bearing. Failure to follow this instruction may result in damage to the vehicle.

Make sure all components are installed to the position they were removed from. Failure to follow this instruction may result in damage to the vehicle.

Attach the driveshaft to the transmission flange.

- Tighten to 88 Nm.

**16.** Fill the transmission.
For additional information, refer to: Fill Procedure (308-03B Manual Transmission/Transaxle - Vehicles With: S6-53 6-Speed Manual Transmission, General Procedures).

GETtheMANUALS.org

Published: 11-May-2011

# Manual Transmission / Transaxle - Vehicles With: S6-53 6-Speed Manual Transmission - Support Insulator

In-vehicle Repair

| Special Tool(s) | |
|---|---|
| | Powertrain Assembly Jack<br><br>HTJ1200-2 |

## Removal

1. Raise and support the vehicle.
   For additional information, refer to: Lifting (100-02 Jacking and Lifting, Description and Operation).
2. Using the special tool, remove the transmission support.

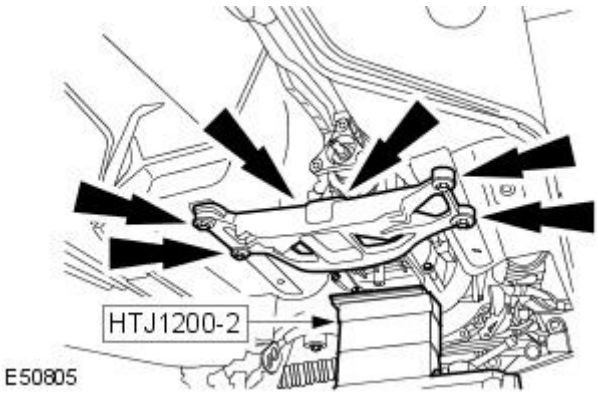


3. Remove the support insulator.

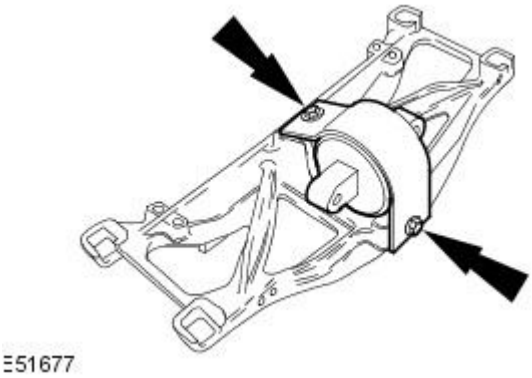


## Installation

1. To install, reverse the removal procedure.
   - Tighten to 55 Nm.

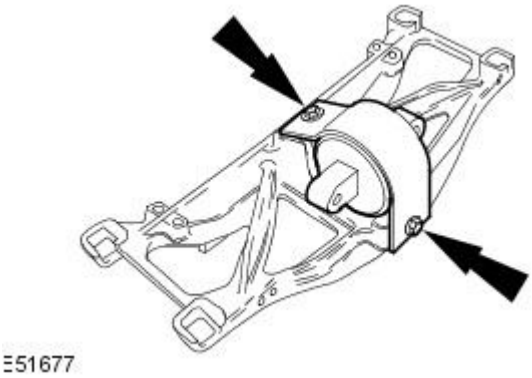


GETtheMANUALS.org

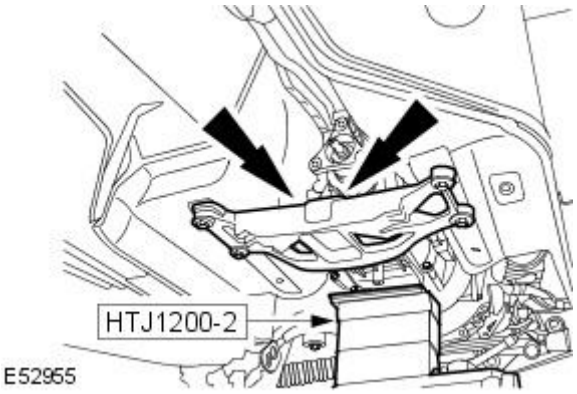


**2.** Tighten to 48 Nm.

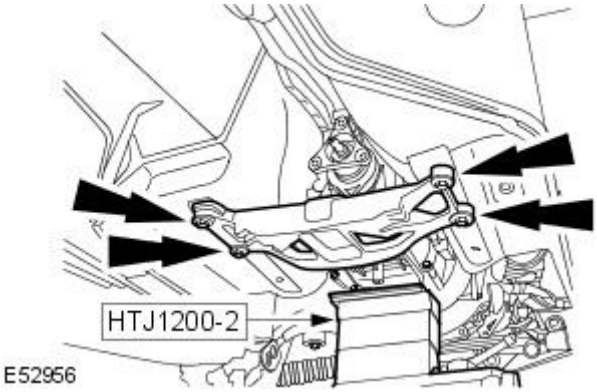


**3.** Tighten to 55 Nm.

GETtheMANUALS.org

# Manual Transmission / Transaxle - Vehicles With: S6-53 6-Speed Manual Transmission - Transmission

Removal

| Special Tool(s) | |
|---|---|
| E52720 | Engine Lifting Brackets<br><br>303-1129 |
| 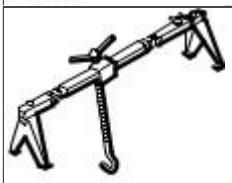 303-021 | Engine Support Beam<br><br>303-021 |
| 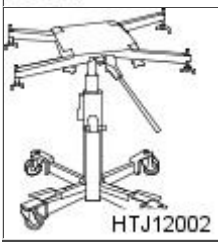 HTJ12002 | Powertrain Assembly Jack<br><br>HTJ1200-2 |

## Removal

**1.** Remove the filler cap.

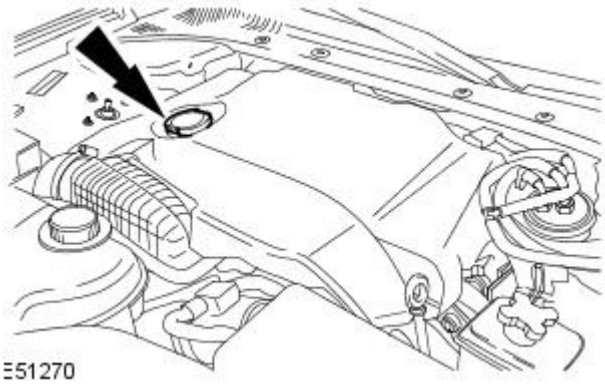


**2.** Remove the engine cover.

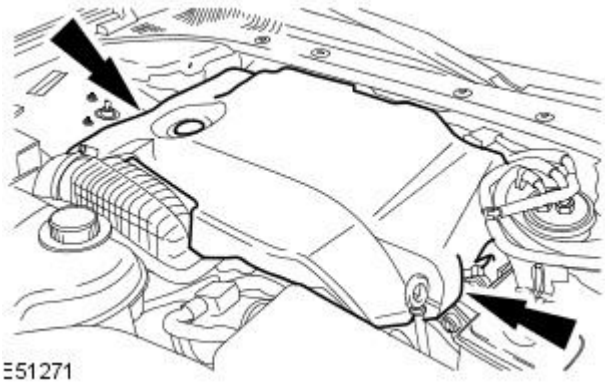


GETtheMANUALS.org

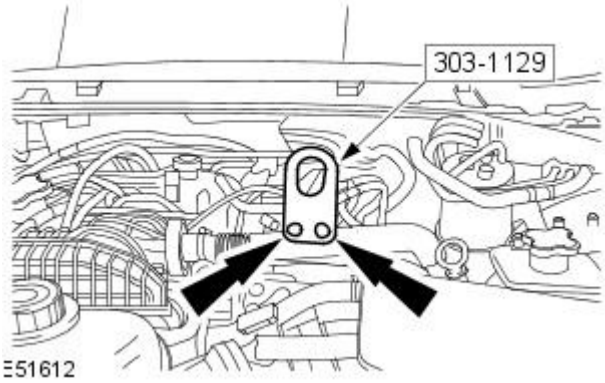


**3.** Install the special tool.

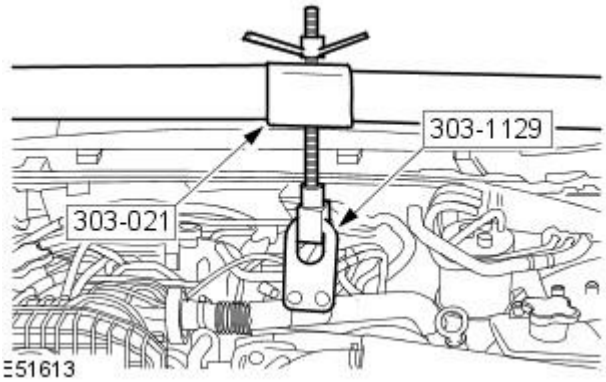


**4.** Install the special tool.

- Rotate the special tool adjustment bolt a suitable amount of turns to support the engine.

**5.** Disconnect the battery ground cable.
For additional information, refer to: Battery Disconnect and Connect (414-01 Battery, Mounting and Cables, General Procedures).

**6.** Remove both catalytic converters.
For additional information, refer to: Catalytic Converter - 2.7L V6 - TdV6 (309-00 Exhaust System, Removal and Installation).

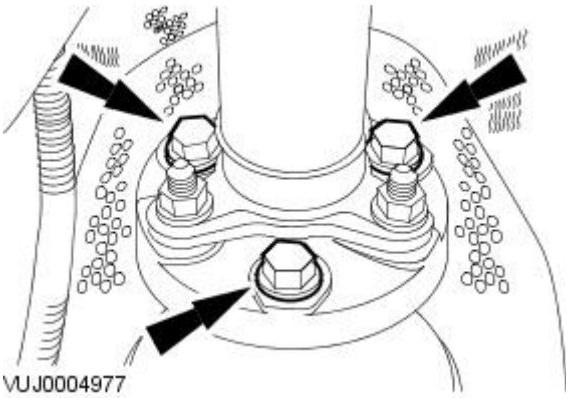


**7.** CAUTIONS:

Under no circumstances must the flexible coupling (or its fixings) be loosened or removed from the driveshaft. Failure to follow this instruction may result in damage to the vehicle.

Make sure the front of the driveshaft does not put an excessive load on the center bearing. Failure to follow this instruction may result in damage to the vehicle.

Detach the driveshaft from the transmission flange.

- Mark the position of the driveshaft in relation to the transmission flange.
- Mark the position of each nut and bolt in relation to the transmission flexible joint.

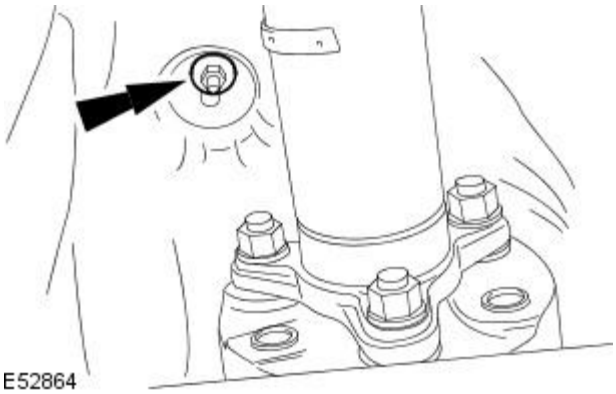


**8.** Loosen the heat shield retaining nut.

GETtheMANUALS.org

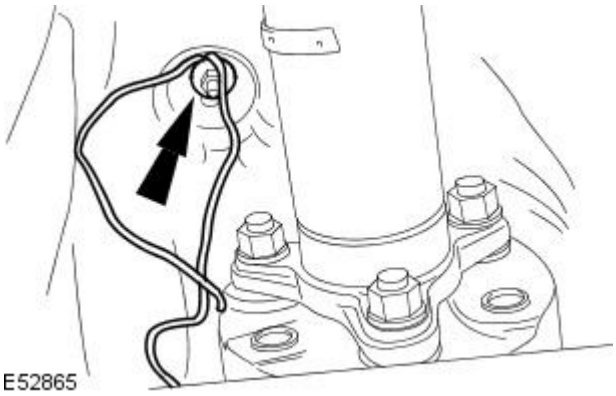


**9.** Install suitable cord to the heat shield retaining nut stud.

- Tighten the retaining nut.

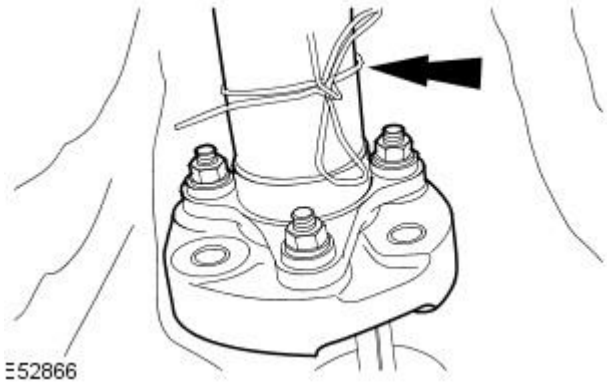


**10.** Reposition the driveshaft.

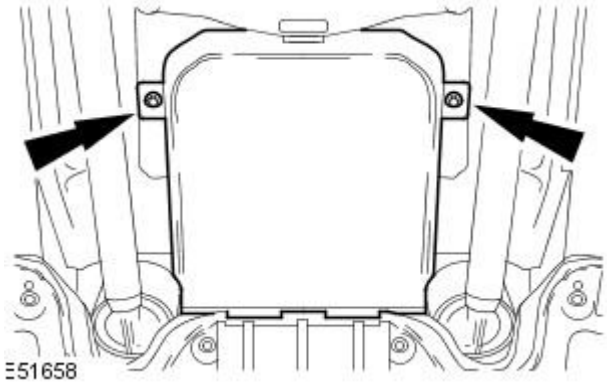


**11.** Remove the transmission undertray.

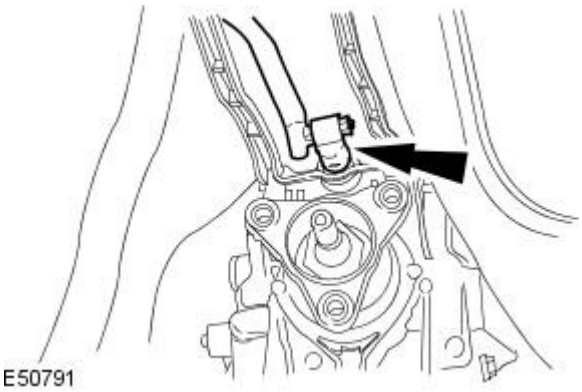


**12.** Detach the gear shift linkage selector rod.

- Remove the gear shift linkage selector rod retaining clip.

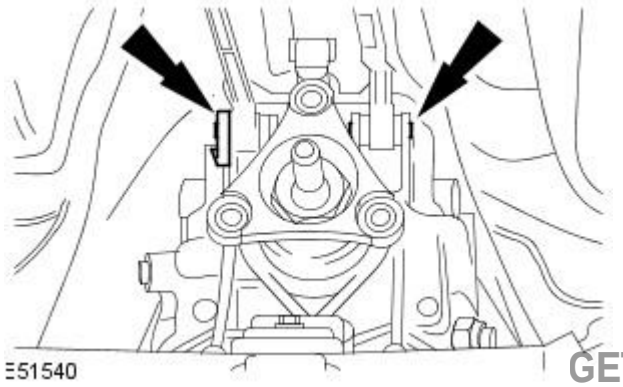


**13.** Detach the gear shift linkage stabilizer rod.

- Remove the clevis pins.

GETtheMANUALS.org

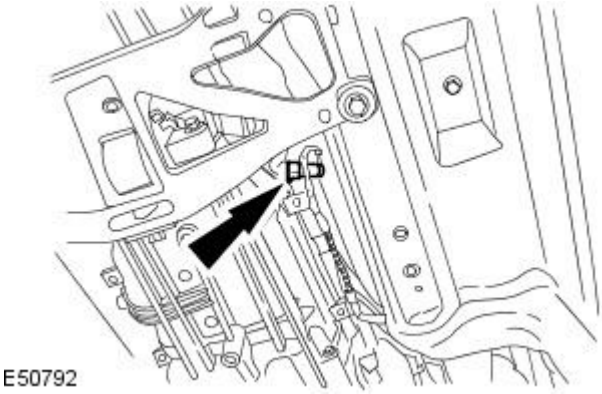


**14.** Disconnect the reverse lamp switch electrical connector.

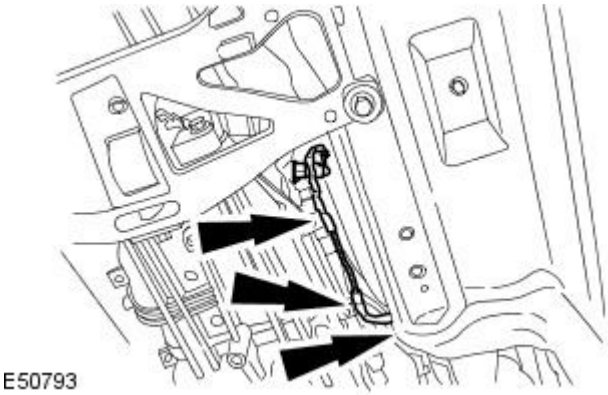


**15.** Detach the reverse lamp switch electrical harness.

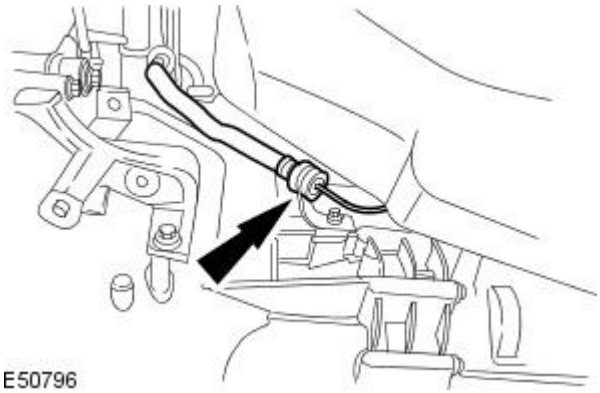


**16.** Detach the clutch slave cylinder supply tube.

- Clamp the hose to prevent loss of fluid.

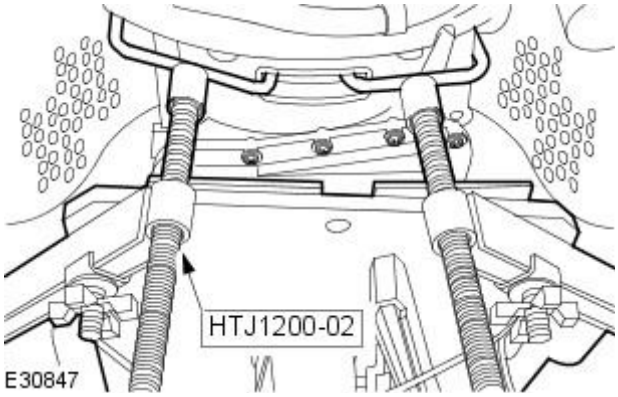


**17.** CAUTION: Make sure the transmission weight is evenly supported on the special tool. Failure to follow this instruction may result in damage to the vehicle.

Install the special tool.

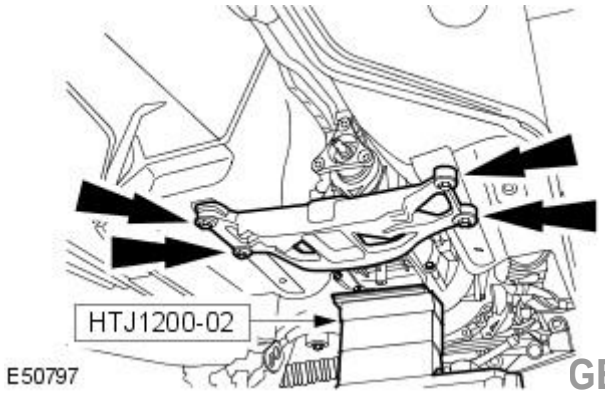


**18.** Using the special tool, lower the rear of the transmission.

- Remove the retaining bolts.

GETtheMANUALS.org

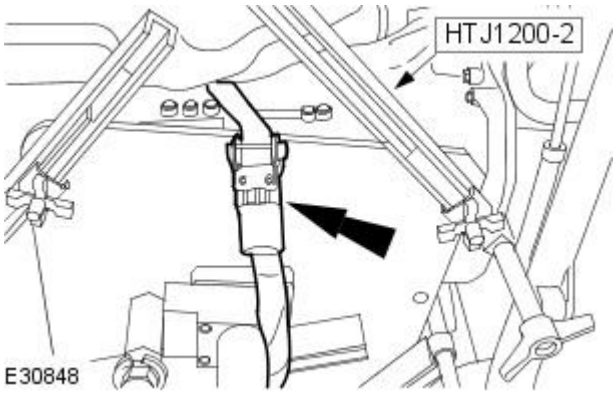


**19.** WARNING: Secure the transmission to the special tool using the tie down straps. Failure to follow this instruction may result in personal injury.

CAUTION: Make sure the tie down strap does not trap the transmissions sensors or harness etc. Failure to follow this instruction may result in damage to the vehicle.

Install the tie down strap.

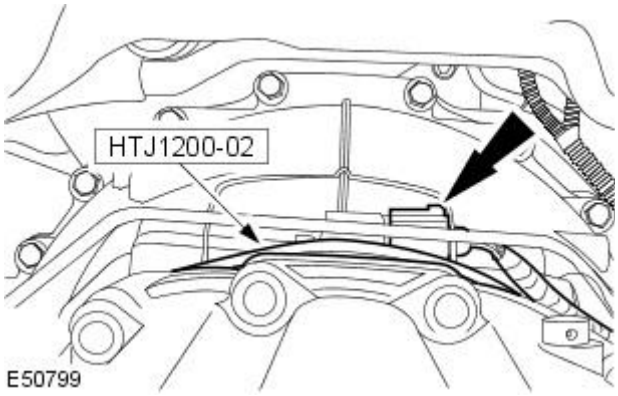


**20.** Disconnect the electrical connector.

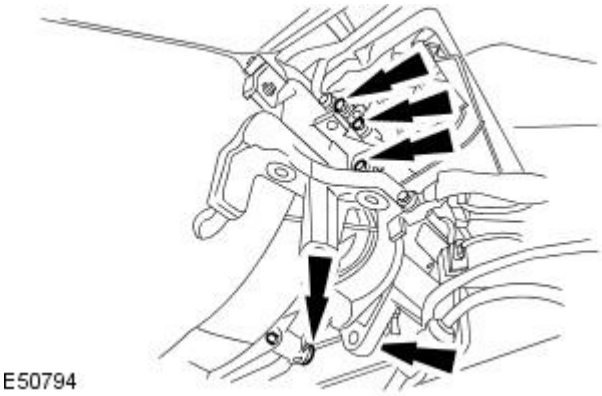


**21.** Remove the retaining bolts.

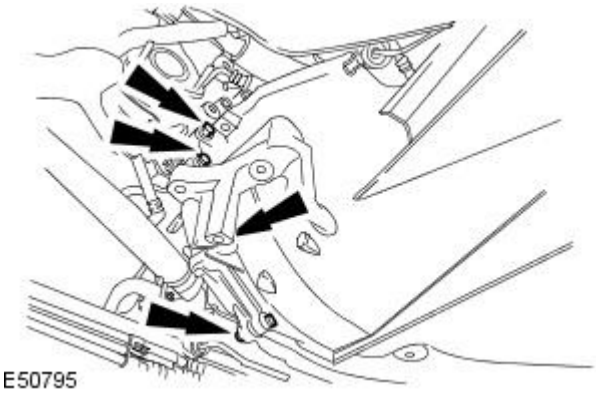


**22.** Remove the retaining bolts.

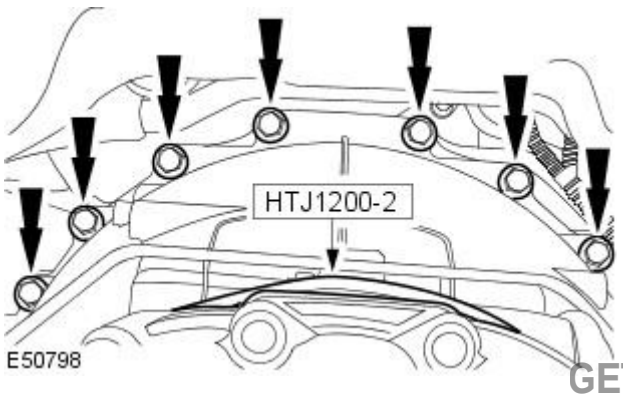


**23.** CAUTION: Make sure the input shaft fully disengages from the clutch disc when removing manual transmission. Failure to follow this instruction may result in damage to the vehicle.

Remove the manual transmission.

- Lower the manual transmission from the vehicle.

GETtheMANUALS.org

# Manual Transmission / Transaxle - Vehicles With: S6-53 6-Speed Manual Transmission - Transmission

Installation

| Special Tool(s) | |
|---|---|
| E52720 | Engine Lifting Brackets<br><br>303-1129 |
| 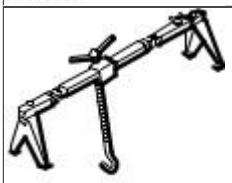 303-021 | Engine Support Bracket<br><br>303-021 |
| 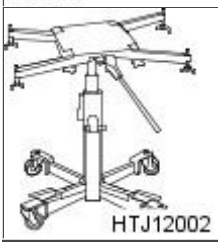 HTJ12002 | Powertrain Assembly Jack<br><br>HTJ1200-02 |

## Installation

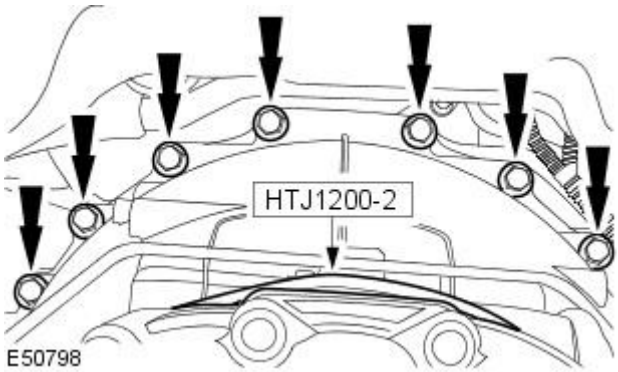

E50798

**1.** CAUTIONS:

Make sure the input shaft correctly engages with the clutch disc when installing manual transmission. Failure to follow this instruction may result in damage to the vehicle.

Make sure the location dowels are fitted correctly to the engine block. Failure to follow this instruction may result in damage to the vehicle.

Make sure the manual transmission correctly locates to the location dowels on the engine block. Failure to follow this instruction may result in damage to the vehicle.

• NOTE: Position the transmission to the engine using the transmission jack.

Install the manual transmission to the vehicle.

- Raise the manual transmission to the vehicle.
- Install the retaining bolts.
- Tighten to 40 Nm.

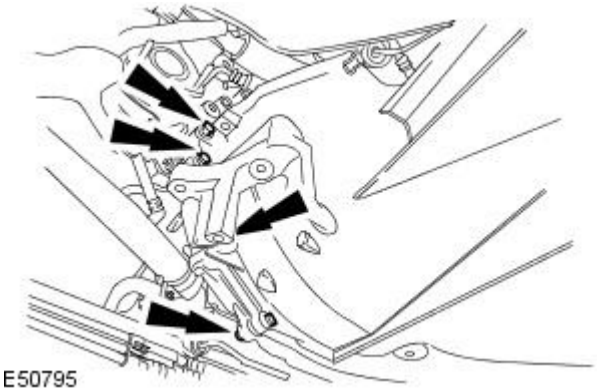
E50795

**2.** Install the retaining bolts.

- Tighten to 40 Nm.

GETtheMANUALS.org

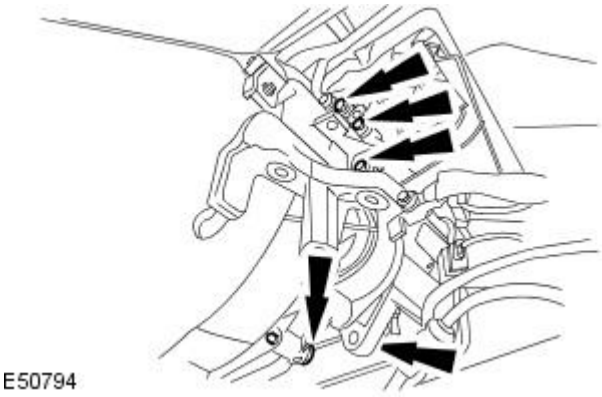


**3.** Install the retaining bolts.

- Tighten to 40 Nm.

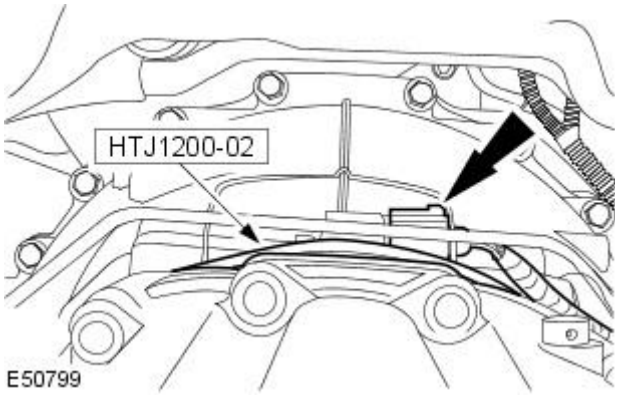


**4.** Connect the electrical connector.

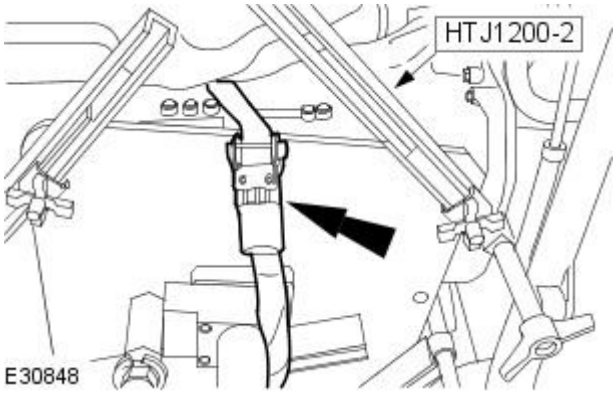


**5.** Remove the tie down strap.

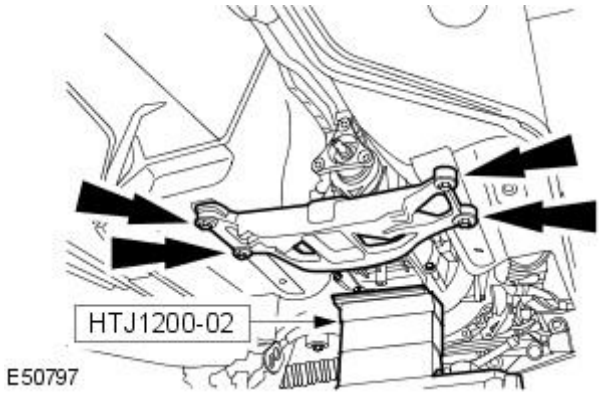


**6.** Install the manual transmission mount retaining bolts.

- Raise the rear of the manual transmission.
- Tighten to 50 Nm.

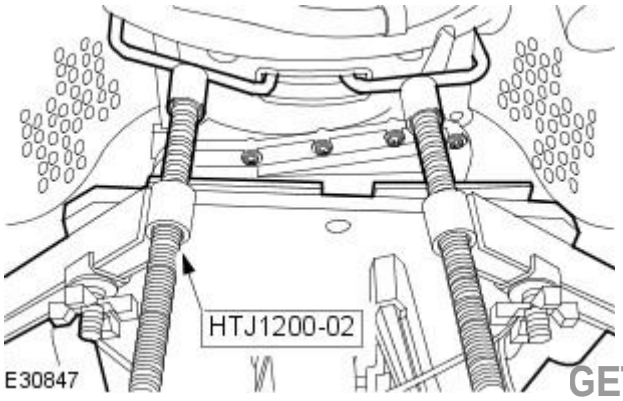


**7.** Remove the special tool.

GETtheMANUALS.org

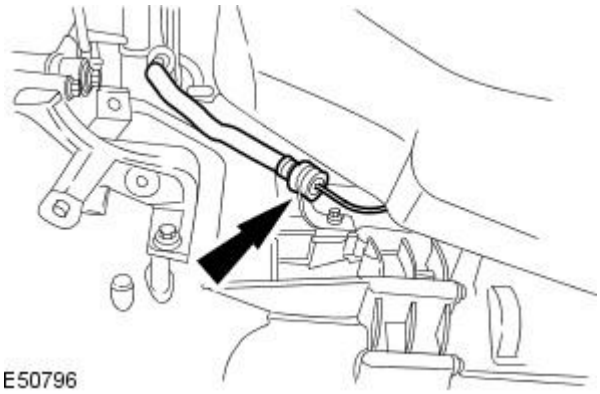


**8.** NOTE: Install a new O-ring seal.

Attach the clutch slave cylinder supply tube.

- Clamp the hose to prevent loss of fluid.
- Unclamp the hose.

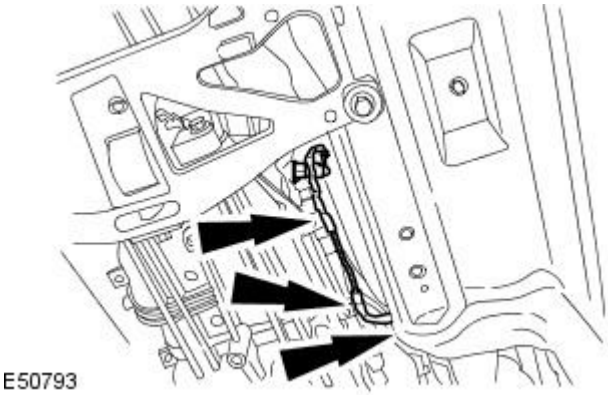


**9.** Attach the reverse lamp switch electrical harness.

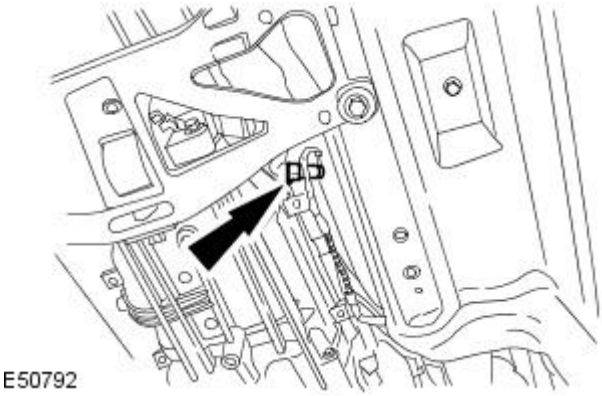


**10.** Connect the reverse lamp switch electrical connector.

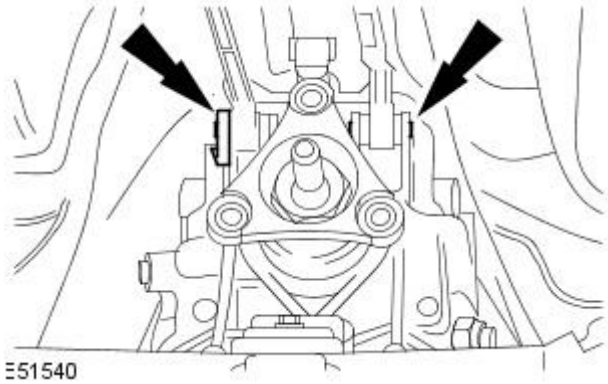


**11.** Attach the gear shift linkage stabilizer rod.

- Install the clevis pins.

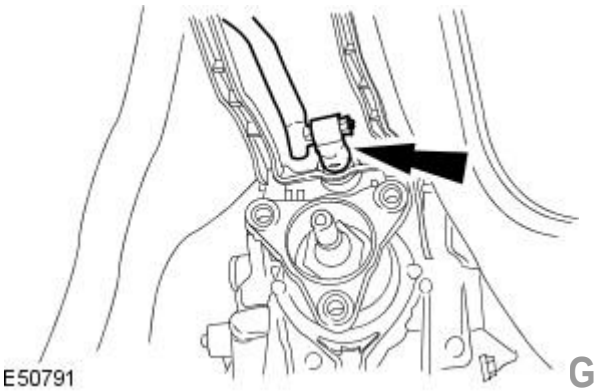


**12.** Attach the gear shift linkage selector rod.

- Install the gear shift linkage selector rod retaining clip.

GETtheMANUALS.org

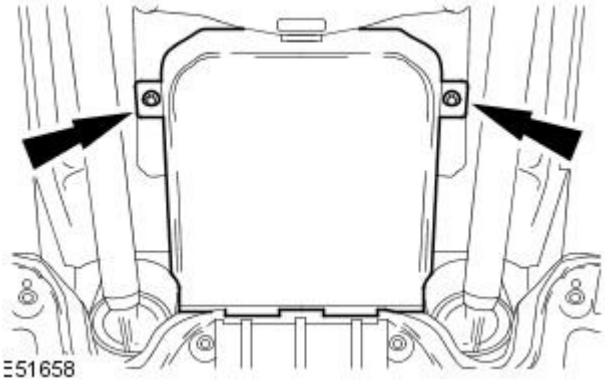


**13.** Install the transmission undertray.

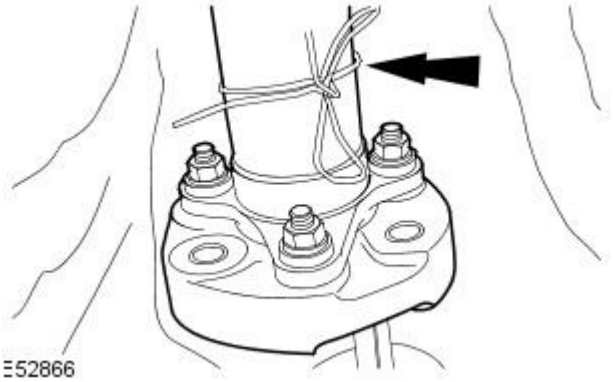


**14.** CAUTION: Make sure the front of the driveshaft does not put an excessive load on the center bearing. Failure to follow this instruction may result in damage to the vehicle.

Reposition the driveshaft.

- Undo the cord.

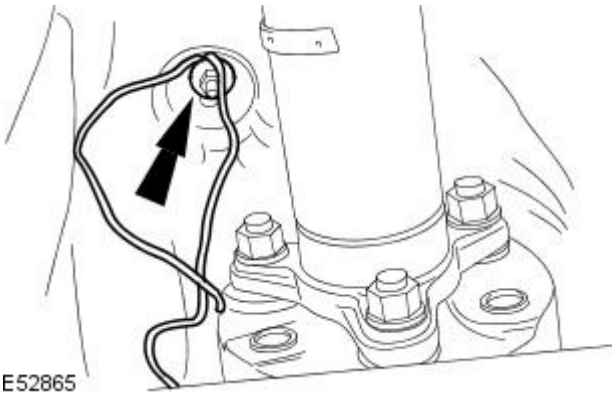


**15.** Loosen the retaining nut.

- Remove the cord from the heat shield retaining nut stud.

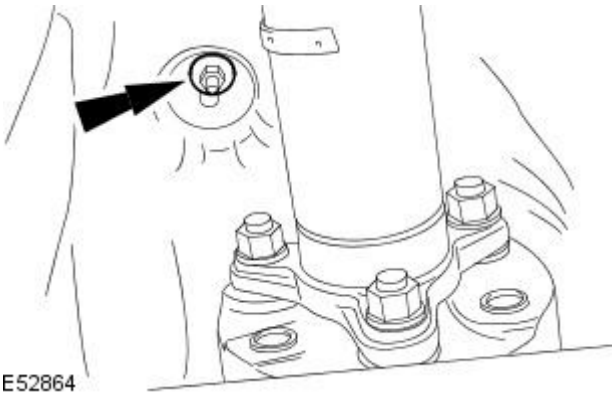


**16.** Tighten the retaining nut.

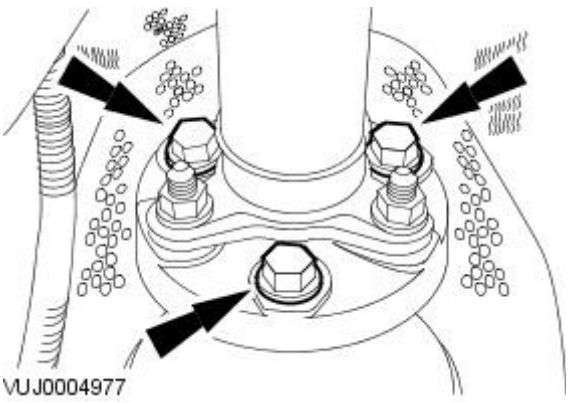


**17.** CAUTIONS:

Make sure the front of the driveshaft does not put an excessive load on the center bearing. Failure to follow this instruction may result in damage to the vehicle.

Make sure all components are installed to the position they were removed from. Failure to follow this instruction may result in damage to the vehicle.

Attach the driveshaft to the transmission flange.

- Tighten to 88 Nm.

GETtheMANUALS.org

**18.** Carry out the clutch system bleeding procedure.
For additional information, refer to: Clutch System Bleeding (308-00 Manual Transmission/Transaxle and Clutch - General Information, General Procedures).

**19.** Install both catalytic converters.
For additional information, refer to: Catalytic Converter - 2.7L V6 - TdV6 (309-00 Exhaust System, Removal and Installation).

**20.** Connect the battery ground cable.
For additional information, refer to: Battery Connect (414-01 Battery, Mounting and Cables, General Procedures).

**21.** Remove the special tool.

- Loosen the special tool adjustment bolt.

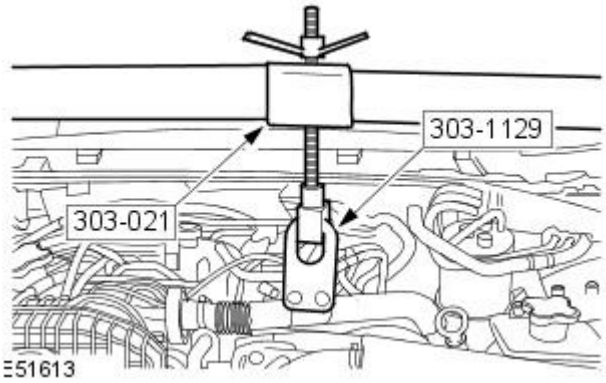


**22.** Remove the special tool.

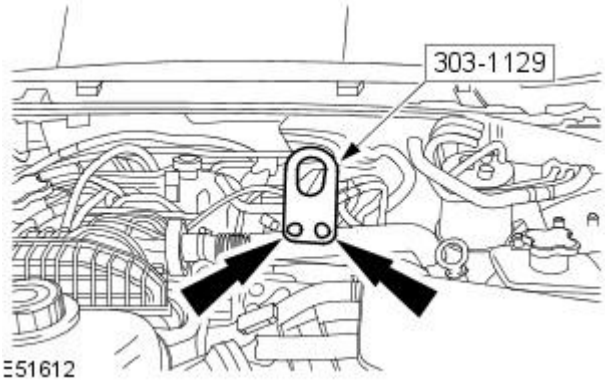


**23.** Install the engine cover.

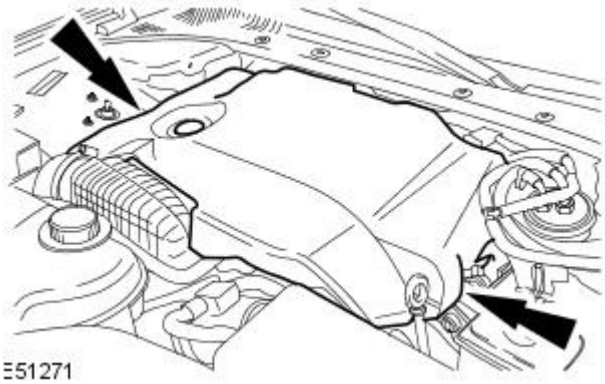


**24.** Install the filler cap.

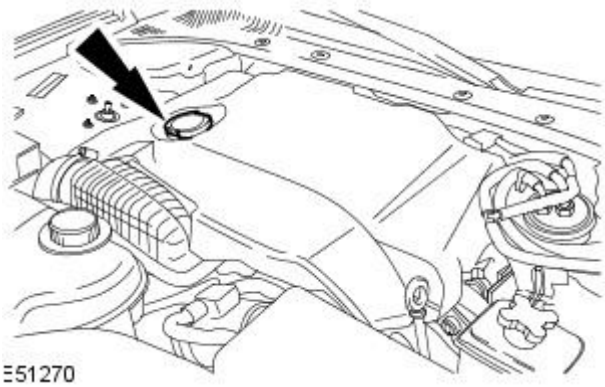


GETtheMANUALS.org

# Manual Transmission / Transaxle External Controls -

**General Specifications**

| Item | Specification |
|---|---|
| Shift linkage lubricant | polyglup SSD-M1C244-A |

GETtheMANUALS.org

# Manual Transmission / Transaxle External Controls - External Controls

Description and Operation

Vehicles with 5-speed manual transmission

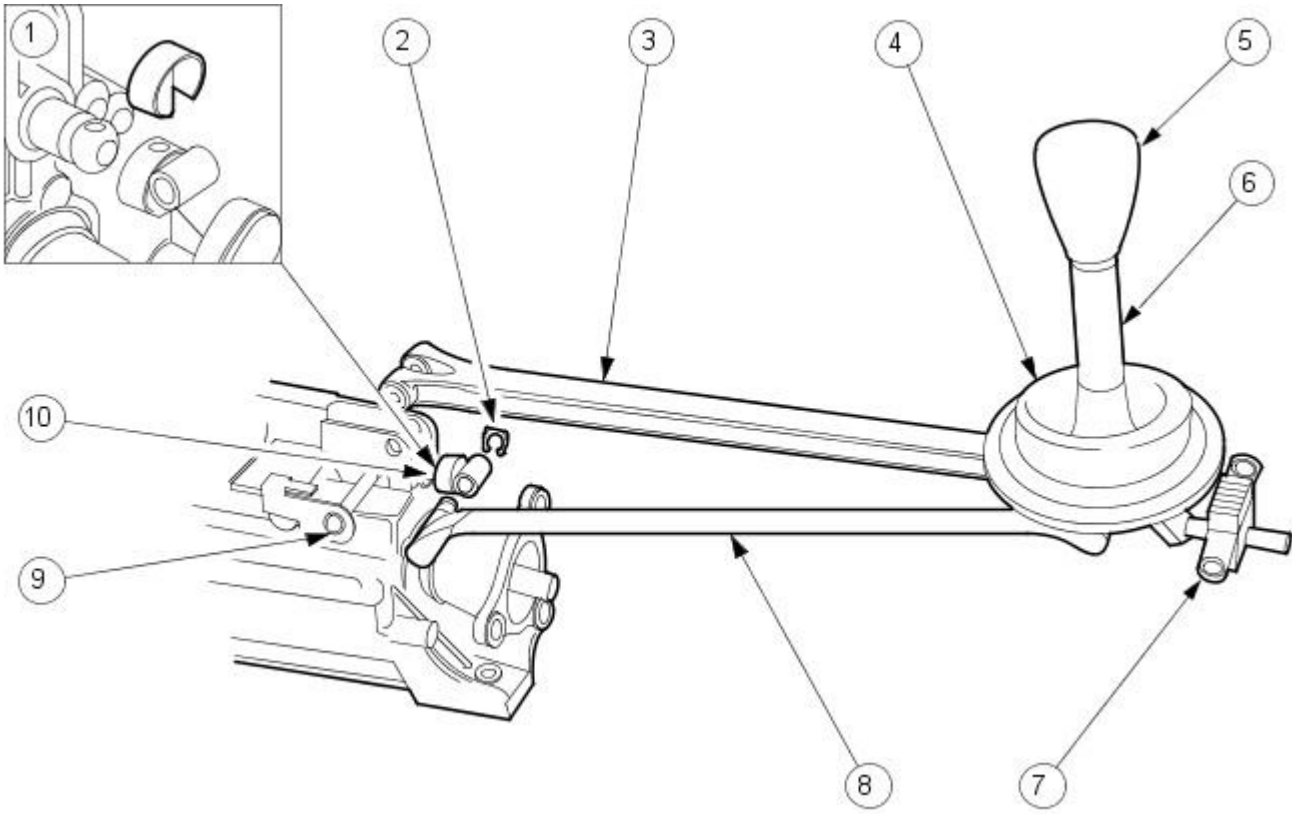


VUJ0000888

| Item | Part Number | Description |
|---|---|---|
| 1 | — | Selector rod clip |
| 2 | — | Selector rod clip |
| 3 | — | Stabilizer rod |
| 4 | — | Gearshift lever gaiter |
| 5 | — | Gearshift lever knob |
| 6 | — | Gearshift lever |
| 7 | — | Stabilizer bar support insulator |
| 8 | — | Selector rod |
| 9 | — | Clevis pin |
| 10 | — | Selector rod link |

Vehicles with 6-speed manual transmission

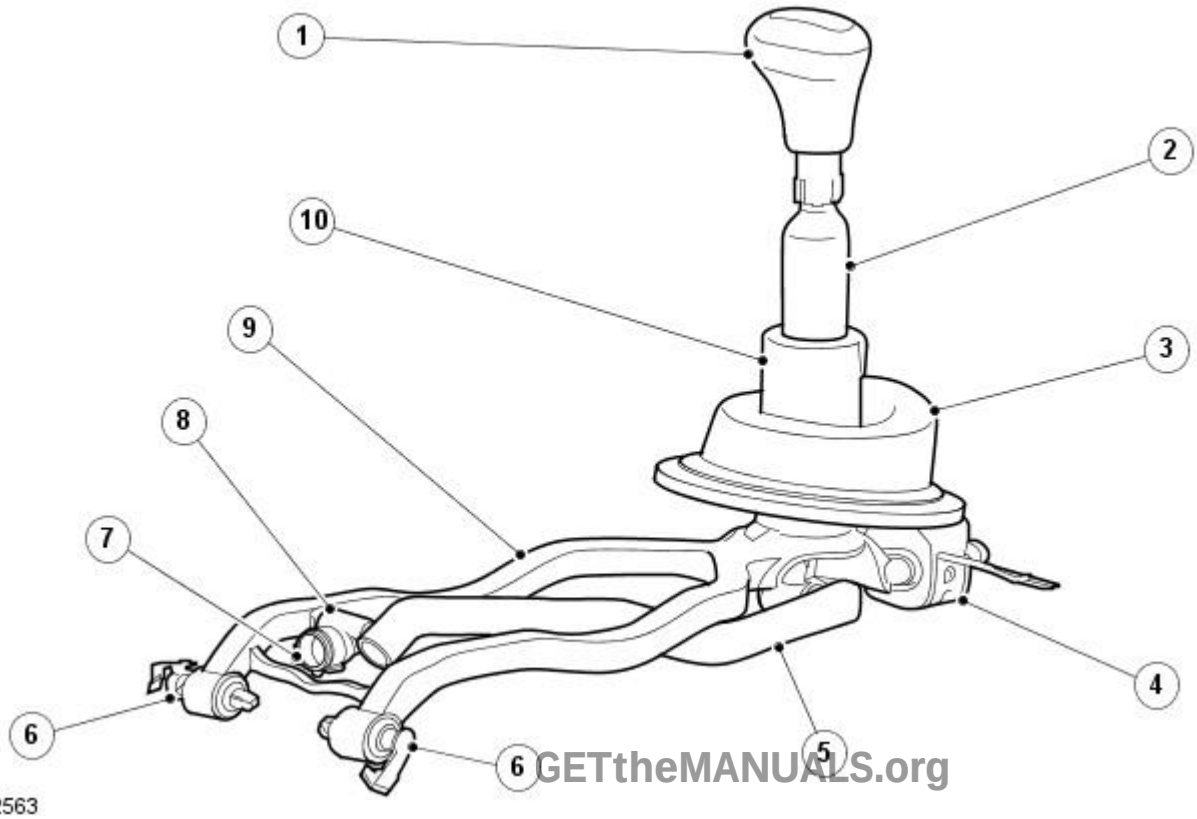


GETtheMANUALS.org

E52563

| Item | Part Number | Description |
|---|---|---|
| 1 | — | Gearshift lever knob |
| 2 | — | Gearshift lever |
| 3 | — | Gearshift lever gaiter |
| 4 | — | Stabilizer bar support insulator |
| 5 | — | Selector rod |
| 6 | — | Clevis pin |
| 7 | — | Selector rod clip |
| 8 | — | Selector rod link |
| 9 | — | Stabilizer rod |
| 10 | — | Mass damper |

The manual transmission is equipped with a selector rod gearshift mechanism. In order to isolate the outer gearshift mechanism from the bodywork, the gearshift housing is located in the gearshift mounting. This mounting accommodates lengthways and rotational movement to allow the movements of the engine/transmission relative to the vehicle body. The gearshift housing is rigidly joined to the transmission by the gearshift stabilizer.

GETtheMANUALS.org

Published: 11-May-2011

# Manual Transmission / Transaxle External Controls - External Controls

Diagnosis and Testing

1. **1.** Verify the customer concern by operating the system.
2. **2.** Visually inspect for obvious signs of mechanical damage.

**Visual Inspection Chart**

| Mechanical | Electrical |
|---|---|
| • Visibly damaged or worn<br>• Loose or missing screws or nuts | •<br>• |

3. **3.** If an obvious cause for an observed or reported concern is found, correct the cause (if possible) before proceeding to the next step.
4. **4.** If the concern is not visually evident, verify the symptom and refer to the
   REFER to: Manual Transmission and Clutch (308-00 Manual Transmission/Transaxle and Clutch - General Information, Diagnosis and Testing).

GETtheMANUALS.org

# Manual Transmission / Transaxle External Controls - Gearshift Lever Bushing

Removal and Installation

## Removal

1. Remove the shift linkage assembly. For additional information, refer to Shift Linkage
2. Detach the shift linkage gaiter.

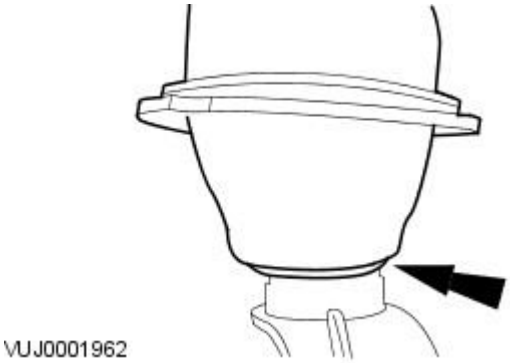

VUJ0001962

3. Remove the selector rod retaining clip.

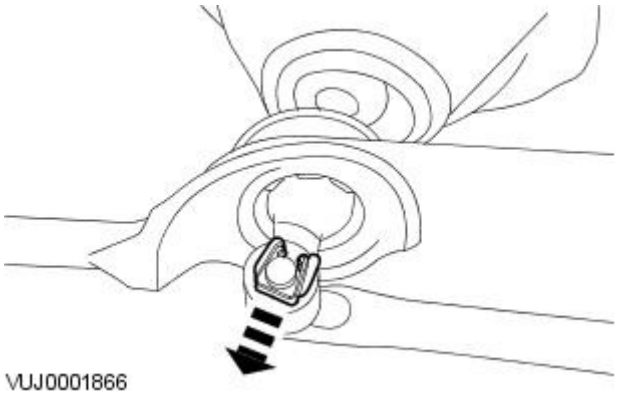

VUJ0001866

4. Remove the selector rod.

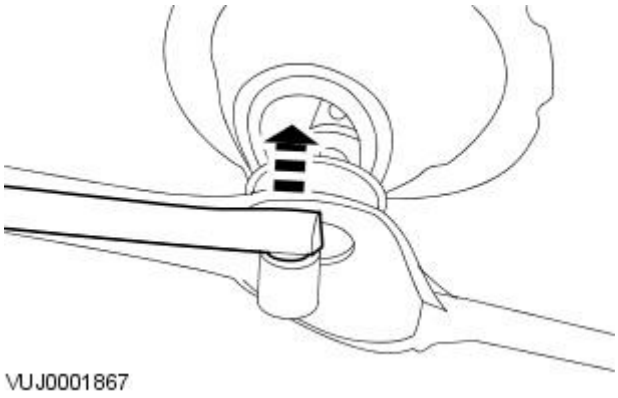

VUJ0001867

5. Release the nylon insert retaining tangs.

VUJ0001868

GETtheMANUALS.org

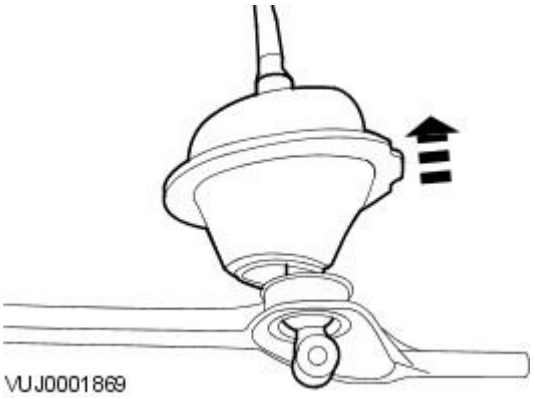


**6.** Remove the gearshift lever assembly.

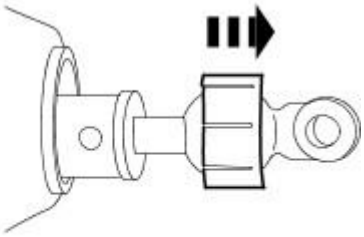


**7.** Remove the nylon insert.

## Installation

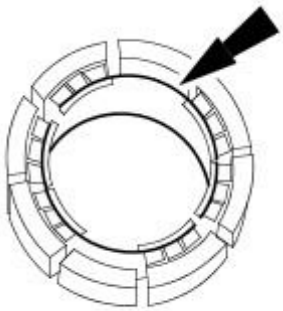


**1.** NOTE: Make sure the gear lever is upright in 3-4 neutral before reconnecting the lever to the selector rod.

• NOTE: Make sure the arrow on the gear lever gaiter is pointing forward before installing.

To install, reverse the removal procedure.

- Apply polyglup SSD-M1C244-A or equivalent.

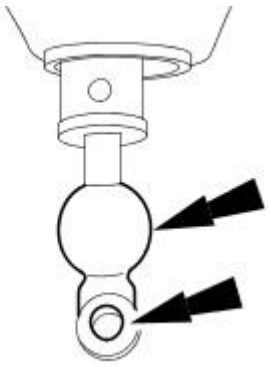


GETtheMANUALS.org

# Manual Transmission / Transaxle External Controls - Gearshift Linkage2.5L NA V6 - AJV6 / 3.0L NA V6 - AJ27

Removal and Installation

## Removal

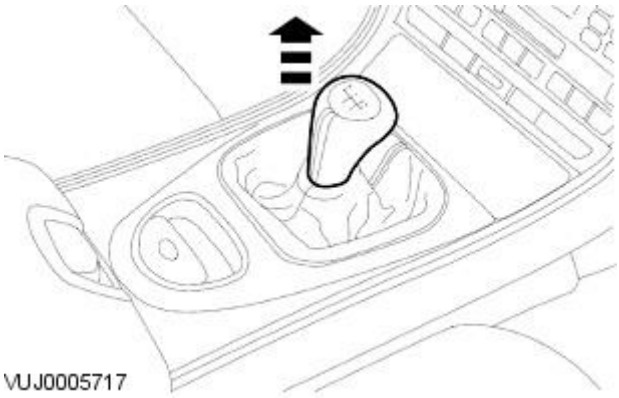


**1.** Remove the selector lever handle.

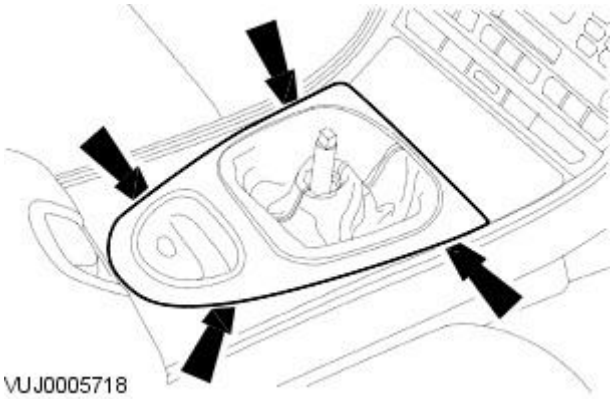


**2.** Remove the selector lever finish panel.

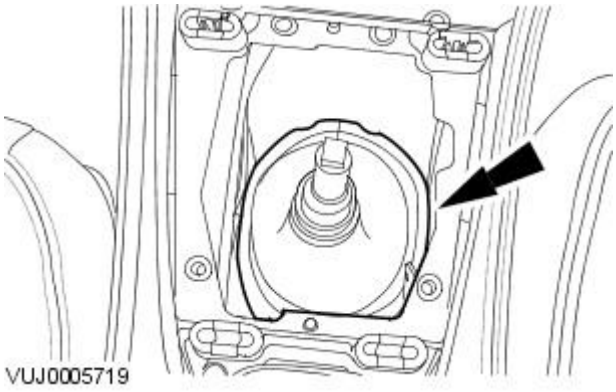


**3.** Remove the selector lever boot.

**4.** Remove the exhaust system.
For additional information, refer to Section 309-00 Exhaust System.

**5.** Remove the driveshaft.
For additional information, refer to Section 205-01 Driveshaft.

**6.** Detact the gear shift linkage selector rod.

- Remove the gear shift linkage selector rod retaining clip.

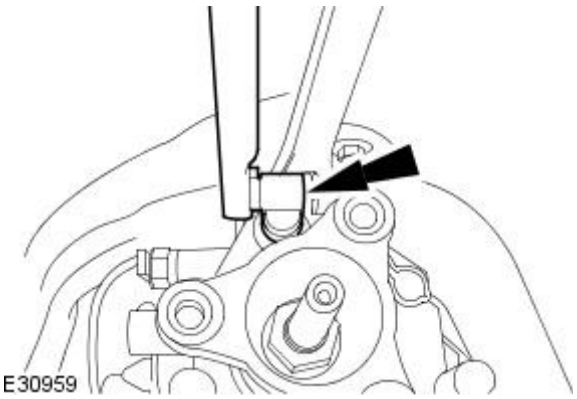


GETtheMANUALS.org

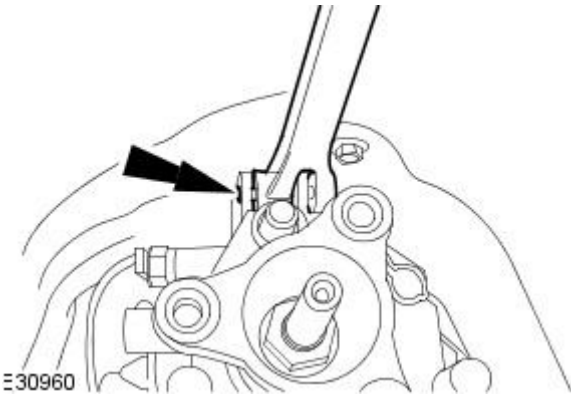


**7.** Detact the gear shift linkage stabilizer rod.

- Remove the clevis pin.

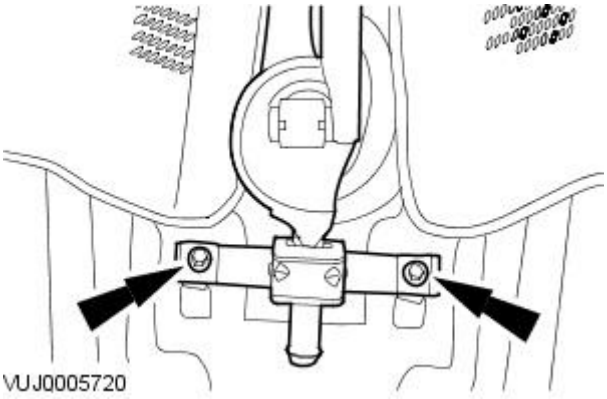


**8.** Remove the gear shift linkage.

## Installation

**1.** To install, reverse the removal procedure.

GETtheMANUALS.org

# Manual Transmission / Transaxle External Controls - Gearshift Linkage2.7L V6 - TdV6

Removal and Installation

## Removal

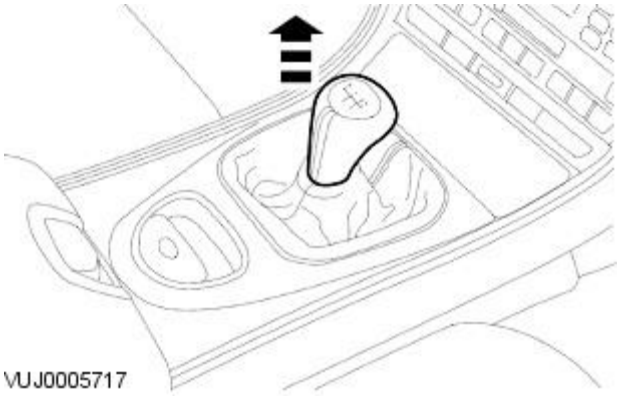


**1.** Remove the selector lever handle.

- Pull the selector lever handle upwards.

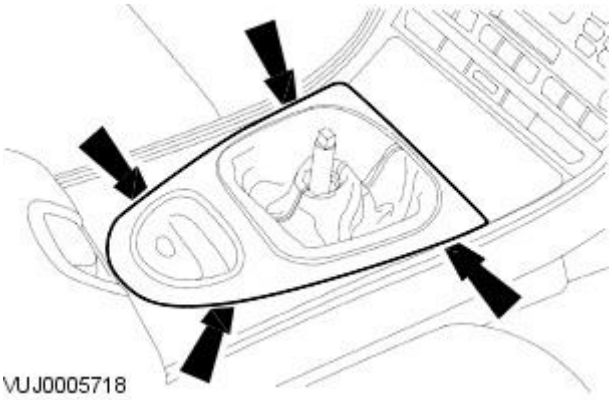


**2.** Remove the selector lever finish panel.

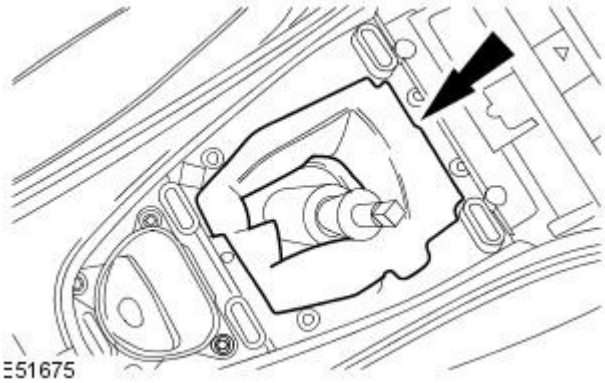


**3.** Remove the insulation foam.

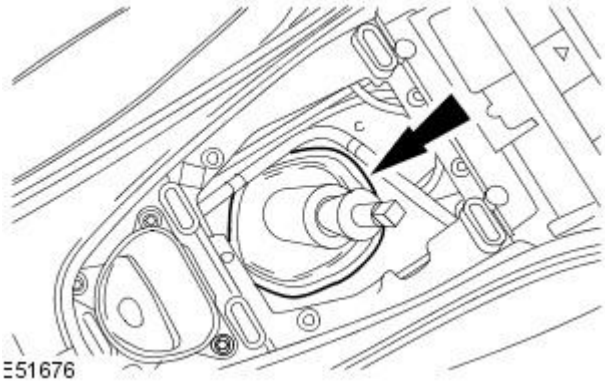


**4.** Detach the selector lever boot.

GETtheMANUALS.org

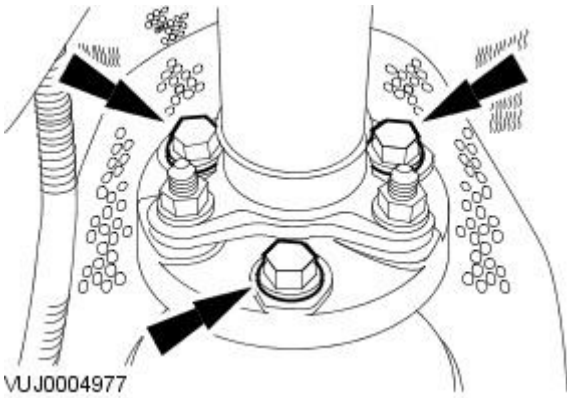


**5.** CAUTIONS:

Under no circumstances must the flexible coupling (or its fixings) be loosened or removed from the driveshaft. Failure to follow this instruction may result in damage to the vehicle.

Make sure the front of the driveshaft does not put an excessive load on the center bearing. Failure to follow this instruction may result in damage to the vehicle.

Detach the driveshaft from the transmission flange.

- Mark the position of the driveshaft in relation to the transmission flange.
- Mark the position of each nut and bolt in relation to the transmission flexible joint.

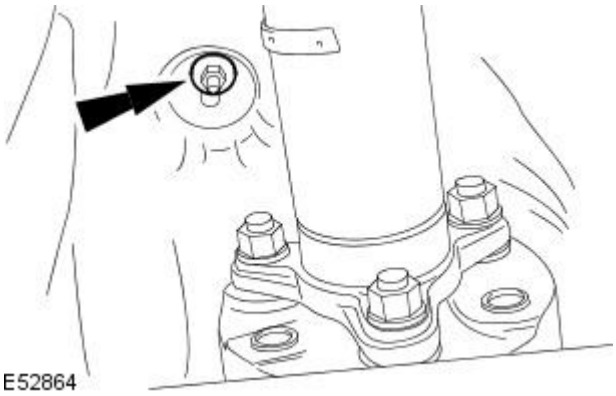


**6.** Loosen the heat shield retaining nut.

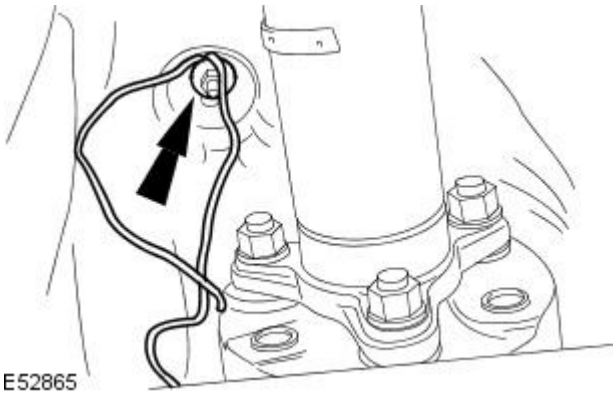


**7.** Install suitable cord to the heat shield retaining nut stud.

- Tighten the retaining nut.

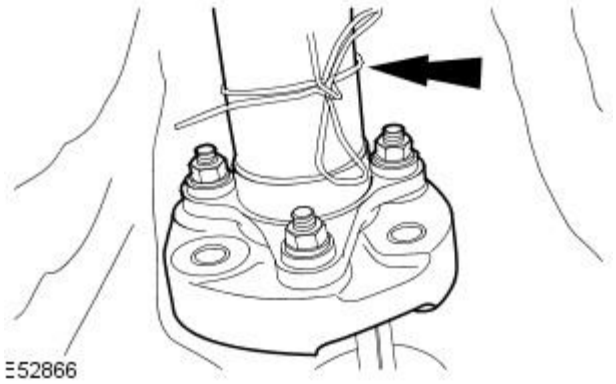


**8.** CAUTION: Make sure the front of the driveshaft does not put an excessive load on the center bearing. Failure to follow this instruction may result in damage to the vehicle.

Reposition and support the driveshaft.

GETtheMANUALS.org

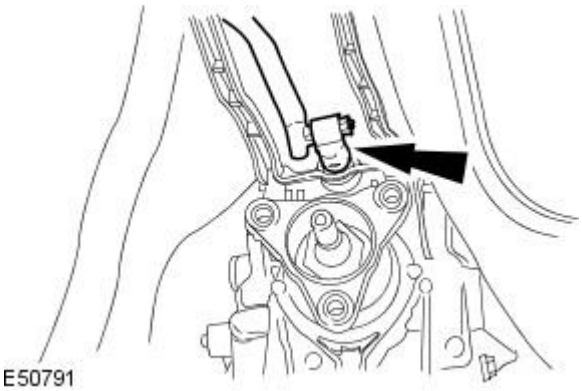


**9.** Detach the gear shift linkage selector rod.

- Remove the gear shift linkage selector rod retaining clip.

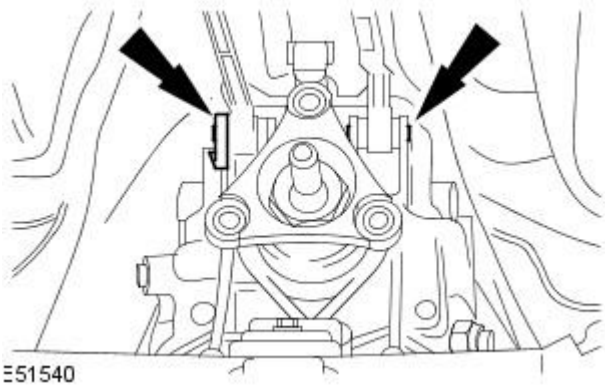


**10.** Detach the gear shift linkage stabilizer rod.

- Remove the clevis pins.

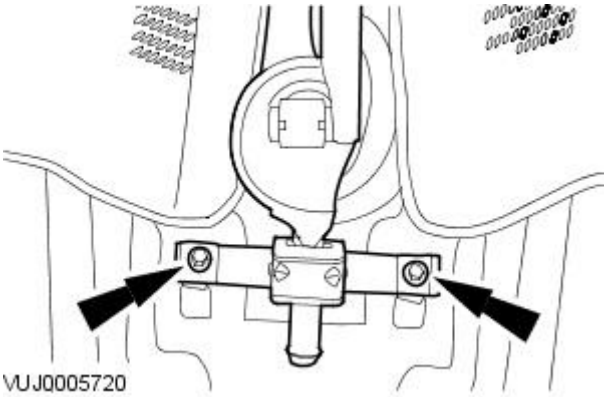


**11.** Remove the gear shift linkage.

## Installation

**1.** To install, reverse the removal procedure.

GETtheMANUALS.org

# Exhaust System -

**Torque Specifications**

| Description | Nm | lb-ft | lb-in |
|---|---|---|---|
| Exhaust manifold to catalytic converter nuts - Vehicles with 2.5L, 3.0L or 4.2L engines | 40 | 30 | - |
| Exhaust manifold to catalytic converter nuts - Vehicles with 2.7L diesel engine | 22 | 16 | - |
| Exhaust clamps | 55 | 41 | - |
| Heated oxygen sensors | 40 | 30 | - |
| Catalyst monitor sensors | 40 | 30 | - |
| Catalyst support bracket* - Vehicles with 2.7L diesel engine | 25 | 18 | - |
| Under body support bracket | 6 | - | 53 |

*For vehicles prior to VIN N85983, refit old fixings and tighten to 22 Nm.

GETtheMANUALS.org

# Exhaust System -

**Torque Specifications**

| Description | Nm | lb-ft | lb-in |
|---|---|---|---|
| Exhaust manifold to catalytic converter retaining nuts (Vehicles without diesel engine) | 40 | 30 | - |
| Catalytic convertor retaining clamp (Vehicles without diesel engine) | 55 | 41 | - |
| Front muffler retaining clamps | 55 | 41 | - |
| Muffler and tailpipe retaining clamp | 55 | 41 | - |
| Heated oxygen sensors (Vehicles without diesel engine) | 40 | 30 | - |
| Catalyst monitor sensors (Vehicles without diesel engine) | 40 | 30 | - |
| Catalyst temperature sensors (Vehicles with diesel engine) | 35 | 26 | - |
| Diesel particulate filter temperature sensor (Vehicles with diesel engine) | 35 | 26 | - |
| Turbocharger to downpipe catalytic convertor retaining studs (Vehicles with diesel engine) | 15 | 11 | - |
| Turbocharger to downpipe catalytic convertor retaining nuts (Vehicles with diesel engine) | 22 | 16 | - |
| Downpipe catalytic convertor to diesel particulate filter securing clamp retaining bolts (Vehicles with diesel engine) | 11 | 8 | - |
| Diesel particulate filter to front muffler securing clamp retaining bolts (Vehicles with diesel engine) | 55 | 41 | - |
| Diesel particulate filter differential pressure sensor retaining nuts (Vehicles with diesel engine) | 5 | - | 44 |

GETtheMANUALS.org

# Exhaust System - Exhaust SystemVIN Range: M45255->N52047

Description and Operation

Exhaust System - Except Vehicles with Diesel Engine

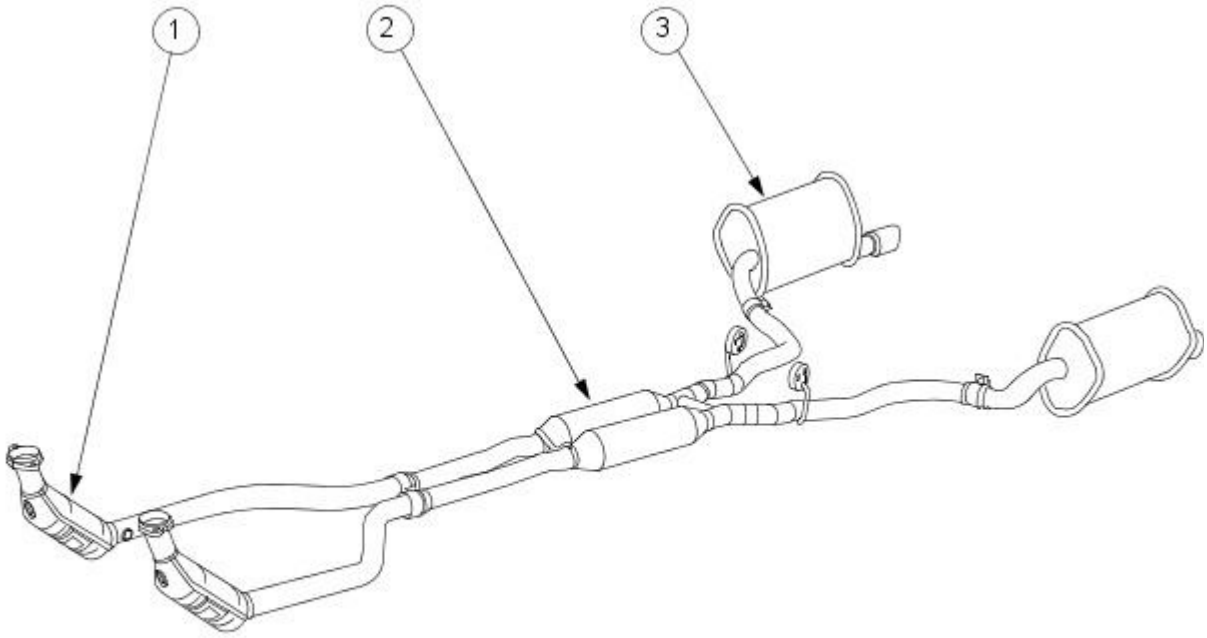


VUJ0000504

| Item | Part Number | Description |
|---|---|---|
| 1 | — | Catalytic converter |
| 2 | — | Front muffler |
| 3 | — | Muffler and tailpipe |

Exhaust System - Vehicles with Diesel Engine

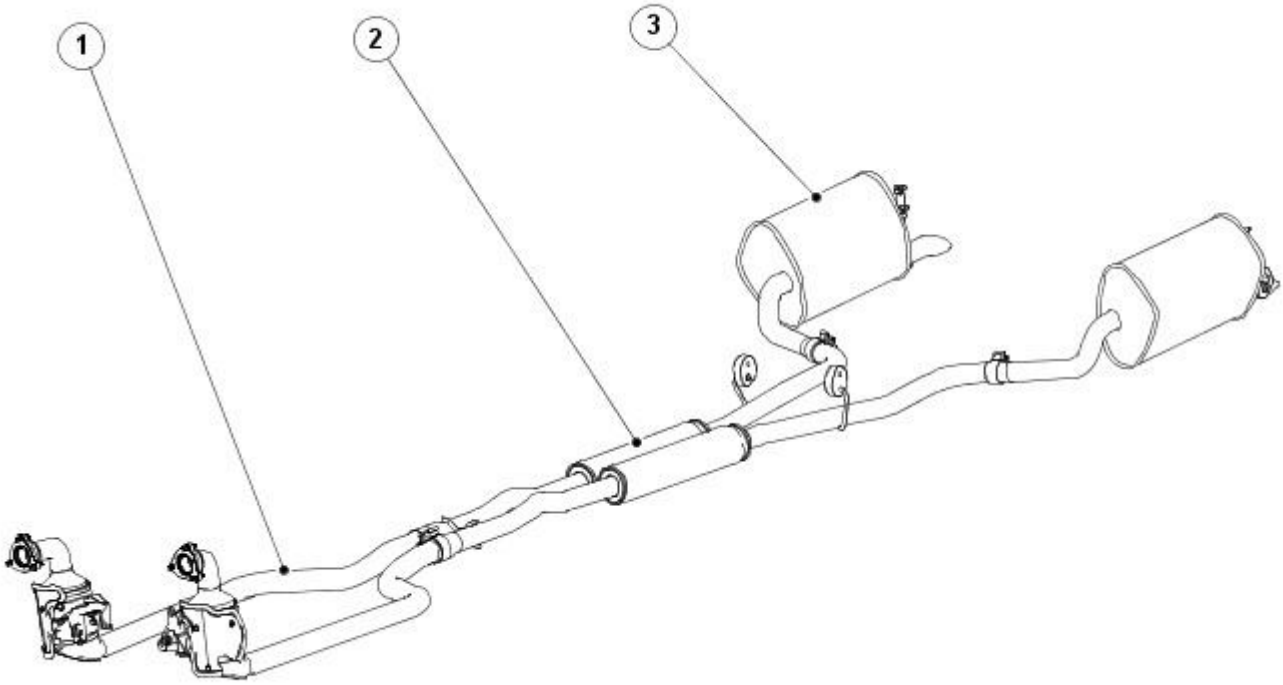


E51065

| Item | Part Number | Description |
|---|---|---|
| 1 | — | Catalytic converter |
| 2 | — | Front muffler |
| 3 | — | Muffler and tailpipe |

The exhaust system for various engines are of similar design but utilize different internal elements to achieve a distinct exhaust note for each variant.

GETtheMANUALS.org

## Catalytic Converters

Three Way Catalytic Converters - Except Vehicles with Diesel Engine

The three way catalytic converters consist of palladium / rhodium coated elements. These elements are utilized to control the emissions of hydrocarbons (HC), carbon monoxide (CO) and oxides of nitrogen (NOx) from the engine.

The catalytic converters are connected to the exhaust manifold by a two bolt self-sealing flange. Exhaust jointing compound must not be applied to these self-sealing joints due to the possibility of catalytic converter contamination. Avoid allowing any foreign particles of debris into the catalytic downpipe as this can result in damage to the catalytic converter.

Oxidation Catalytic Converter - Vehicles with Diesel Engine

The oxidation catalytic converters consist of a element coated with platinum. This element is utilized to control the emissions of hydrocarbons (HC), carbon monoxide (CO) and particles of matter (soot) from the engine.

The catalytic converters are connected to the turbocharger by a three bolt flange and decoupler assembly, sealed by a gasket. Exhaust jointing compound must not be applied to these joints due to the possibility of catalytic converter contamination. Avoid allowing any foreign particles of debris into the catalytic downpipe as this can result in damage to the catalytic converter.

GETtheMANUALS.org

# Exhaust System - Exhaust SystemVIN Range: N52048->N99999

Description and Operation

Exhaust System - Except Vehicles with Diesel Engine

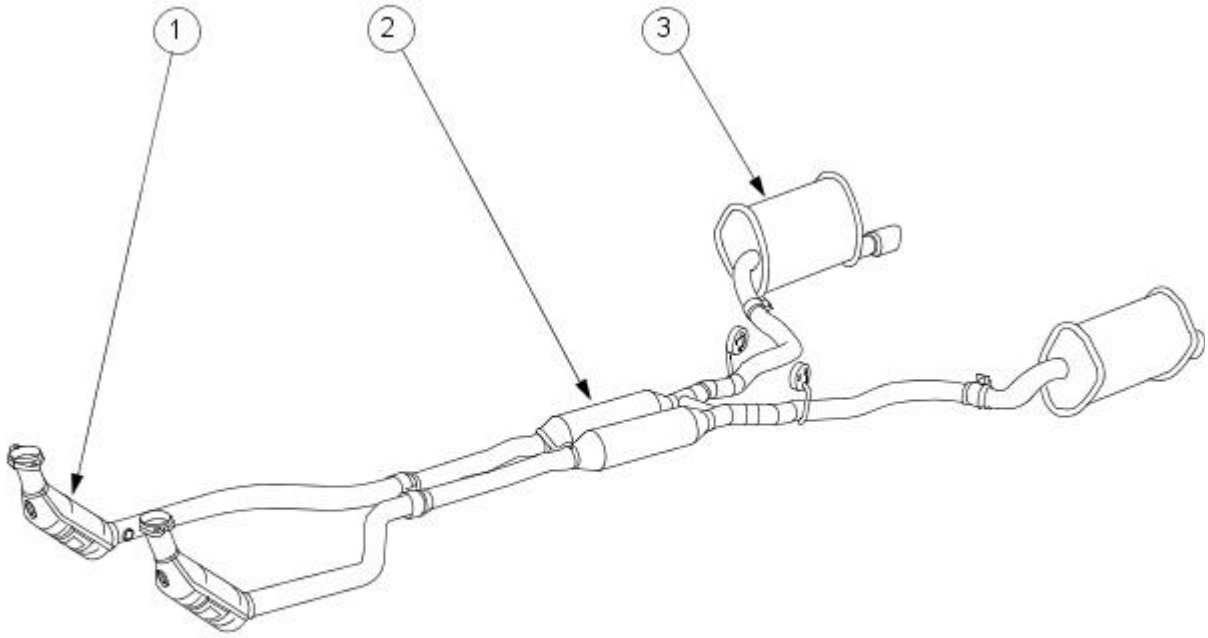


VUJ0000504

| Item | Part Number | Description |
|---|---|---|
| 1 | — | Catalytic converter |
| 2 | — | Front muffler |
| 3 | — | Muffler and tailpipe |

Exhaust System - Vehicles with Diesel Engine

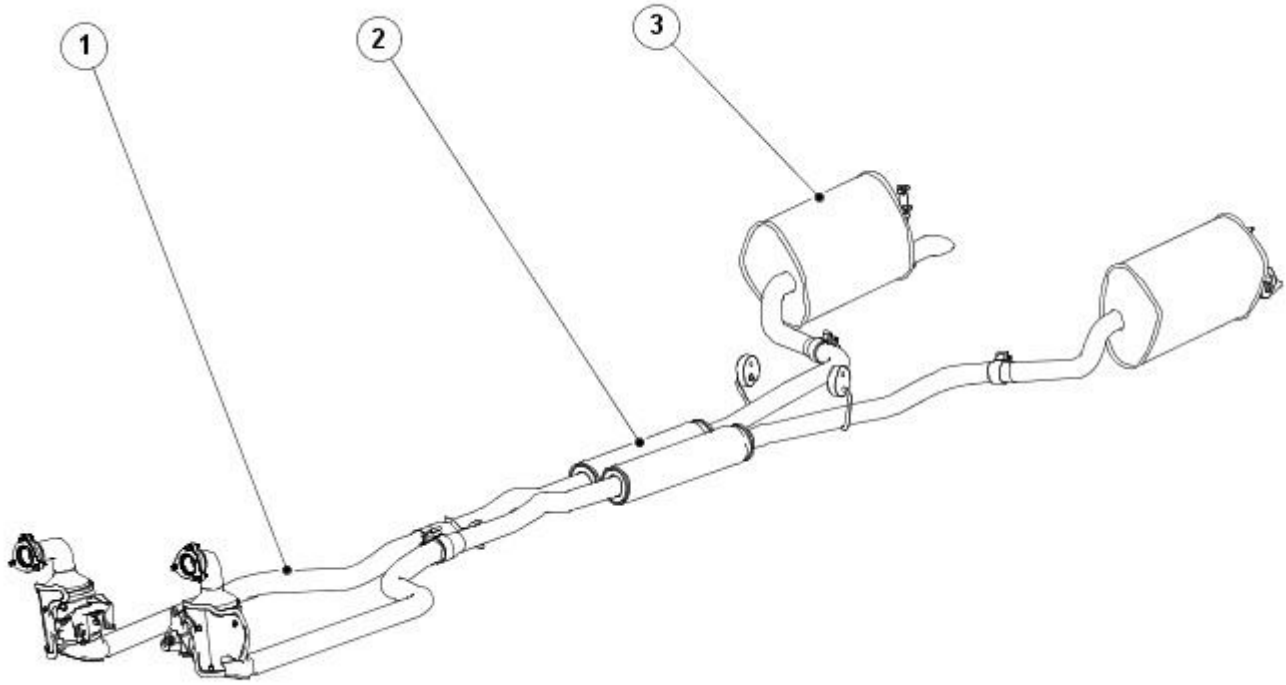


E51065

| Item | Part Number | Description |
|---|---|---|
| 1 | — | Catalytic converter |
| 2 | — | Front muffler |
| 3 | — | Muffler and tailpipe |

The exhaust system for various engines are of similar design but utilize different internal elements to achieve a distinct exhaust note for each variant.

GETtheMANUALS.org

## Catalytic Converters

Three Way Catalytic Converters - Except Vehicles with Diesel Engine

The three way catalytic converters consist of palladium / rhodium coated elements. These elements are utilized to control the emissions of hydrocarbons (HC), carbon monoxide (CO) and oxides of nitrogen (NOx) from the engine.

The catalytic converters are connected to the exhaust manifold by a two bolt self-sealing flange. Exhaust jointing compound must not be applied to these self-sealing joints due to the possibility of catalytic converter contamination. Avoid allowing any foreign particles of debris into the catalytic downpipe as this can result in damage to the catalytic converter.

Oxidation Catalytic Converter - Vehicles with Diesel Engine

The oxidation catalytic converters consist of a element coated with platinum. This element is utilized to control the emissions of hydrocarbons (HC), carbon monoxide (CO) and particles of matter (soot) from the engine.

The catalytic converters are connected to the turbocharger by a three bolt flange and decoupler assembly, sealed by a gasket. Exhaust jointing compound must not be applied to these joints due to the possibility of catalytic converter contamination. Avoid allowing any foreign particles of debris into the catalytic downpipe as this can result in damage to the catalytic converter.

GETtheMANUALS.org

# Exhaust System - Exhaust SystemVIN Range: M45255->N13088

Diagnosis and Testing

## Inspection and Verification

1. **1.** Verify the customer concern by operating the system.
2. **2.** Visually inspect for obvious signs of mechanical damage.

**Visual Inspection Chart**

| Mechanical |
|---|
| Leaks |
| Metal fatigue |
| Pipes, mufflers and catalytic converters |
| Joints |
| Mountings |
| Clearance around components |

3. **3.** If an obvious cause for an observed or reported concern is found, correct the cause (if possible) before proceeding to the next step.
4. **4.** If the concern is not visually evident, verify the symptom and refer to the Symptom Chart.

## Symptom Chart

**Symptom Chart**

| Symptom | Possible Sources | Action |
|---|---|---|
| Noisy or leaking exhaust | * Exhaust system/components. | * INSTALL new components as necessary. |
| Loss of power | * Restricted exhaust system. | * INSTALL new components as necessary. |
| | * Fuel system. | * CHECK and REPAIR the fuel system as necessary. For additional information, refer to Section 310-00 Fuel System - General Information |
| | * Ignition system. | * CHECK and REPAIR the ignition system as necessary. For additional information, refer to Section 303-07A Engine IgnitionSection 303-07B Engine IgnitionSection 303-07C Glow Plug System. For additional information, refer to Section 303-07A Engine IgnitionSection 303-07B Engine IgnitionSection 303-07C Glow Plug System |
| | * Electronic engine control. | * CHECK and REPAIR the electronic engine control system as necessary. For additional information, refer to Section 303-14A Electronic Engine ControlsSection 303-14B Electronic Engine ControlsSection 303-14C Electronic Engine Controls. For additional information, refer to Section 303-14A Electronic Engine ControlsSection 303-14B Electronic Engine ControlsSection 303-14C Electronic Engine Controls |

GETtheMANUALS.org

# Exhaust System - Exhaust SystemVIN Range: N13089->N99999

Diagnosis and Testing

## Inspection and Verification

1. **1.** Verify the customer concern.
2. **2.** Visually inspect for obvious signs of mechanical damage.

| Visual inspection |
|---|
| • Inspect the exhaust system components for damage<br>• Check the condition and security of the system fittings<br>• Check the condition and security of the system mountings<br>• Check the system for evidence of leakage<br>• Check the alignment of the system |

3. **3.** If an obvious cause for an observed or reported concern is found, correct the cause (if possible) before proceeding to the next step.
4. **4.** If the concern is not visually evident, verify the symptom and refer to the Symptom Chart.

## Symptom Chart

| Symptom | Possible cause | Action |
|---|---|---|
| Excessive fuel consumption/poor performance | • Damaged/Blocked exhaust pipe and/or mufflers<br>• Damaged/Blocked catalytic converter | Inspect the exhaust sytem for damage. Disconnect the exhaust system from the catalytic converters and check for restricted flow. Remove the catalytic converters and inspect internally for damage. Install new components as necessary.<br>REFER to: Exhaust System - VIN Range: N52048->N99999 (309-00 Exhaust System, Description and Operation). |
| Knocks/Rattles from underside | • Exhaust system components insecure/damaged<br>• Catalytic converters damaged | Inspect the exhaust sytem for damage. Check the security of the exhaust system fittings. Tap the sides of the catalytic converters with a soft-faced hammer and listen for movement inside the converter. Install new components as necessary.<br>REFER to: Exhaust System - VIN Range: N52048->N99999 (309-00 Exhaust System, Description and Operation). |
| Noise/Fumes inside vehicle | • Exhaust system components insecure/damaged<br>• Leakage from joints | Inspect the exhaust sytem for damage. Check the security of the exhaust system fittings. In a well-ventilated area, close off the tailpipes and check for evidence of leakage. Seal any leaks as necessary. |

GETtheMANUALS.org

# Exhaust System - Catalytic ConverterV8 4.2L Petrol/V8 S/C 4.2L Petrol/2.5L NA V6 - AJV6/3.0L NA V6 - AJ27

Removal and Installation

## Removal

**1.** Raise and support the vehicle.
For additional information, refer to: Jacking (100-02 Jacking and Lifting, Description and Operation).

**2.** Remove the heated oxygen sensor (HO2S).

1. Disconnect the heated oxygen sensor electrical connector.
2. Remove the HO2S.

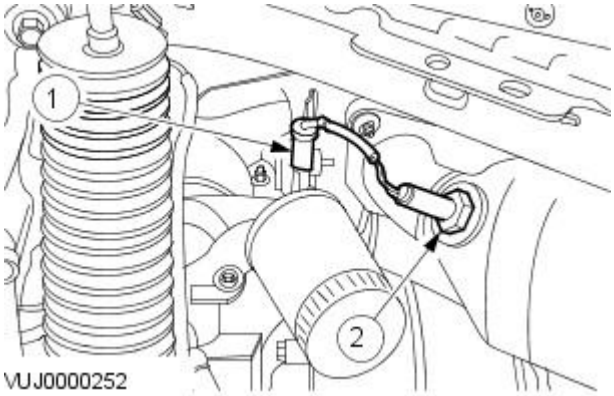


**3.** Remove the catalyst monitor sensor.

1. Disconnect the catalyst monitor sensor electrical connector.
2. Remove the catalyst monitor sensor.

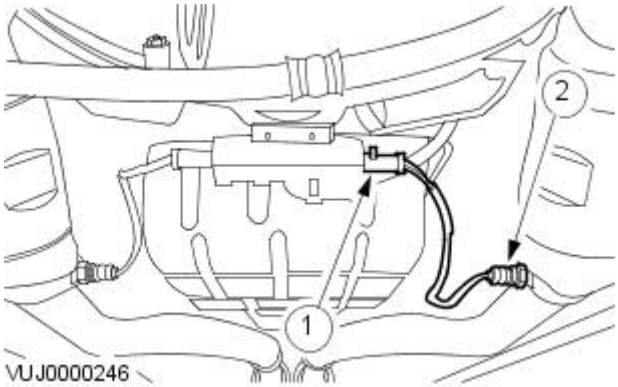


**4.** Loosen the catalytic converter retaining clamp.

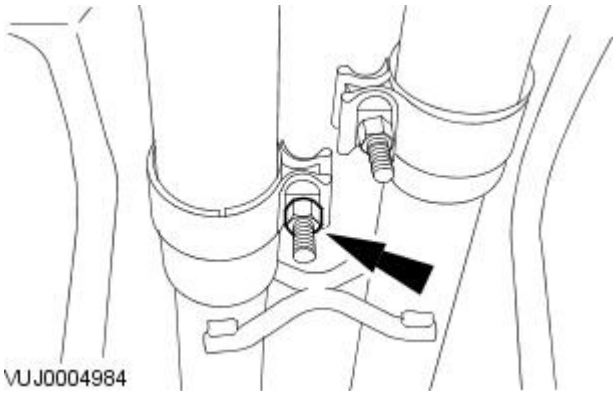


**5.** Detach the catalytic converter.

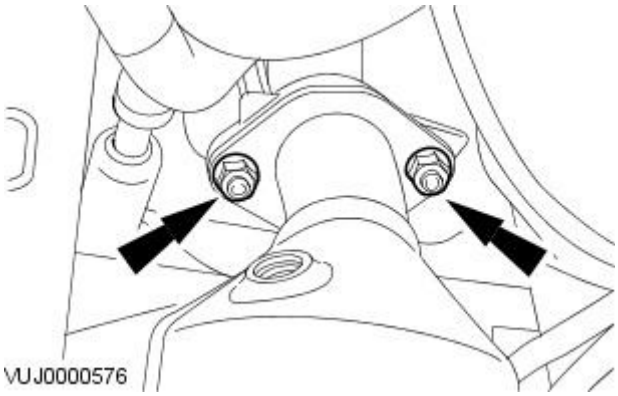


GETtheMANUALS.org

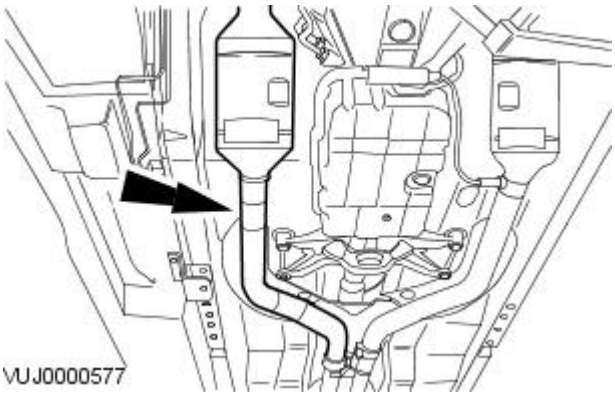


**6.** Remove the catalytic converter.

## Installation

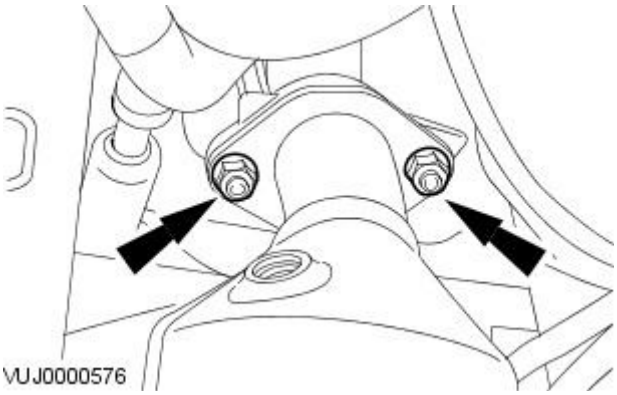


**1.** CAUTION: Never use jointing compound forward of the catalytic converter.

To install reverse, the removal procedure.

- Tighten to 40 Nm.

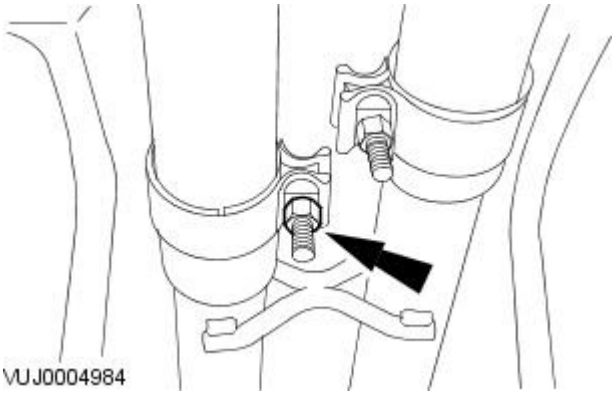


**2.** Tighten to 55 Nm.

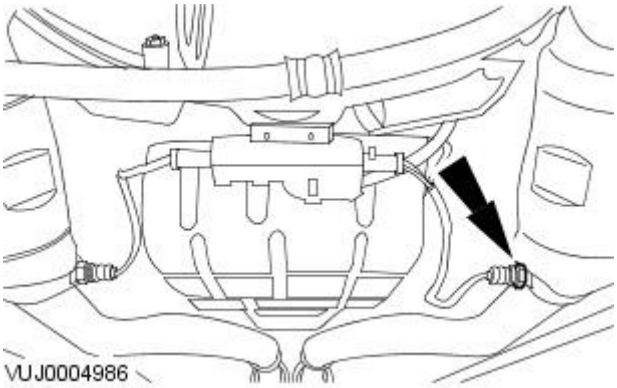


**3.** Tighten to 40 Nm.

GETtheMANUALS.org

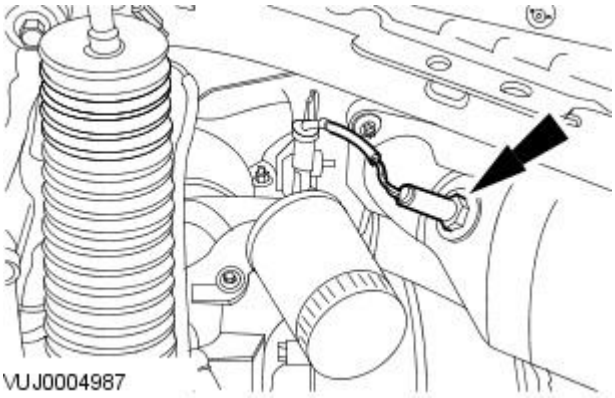


**4.** Tighten to 40 Nm.

**5.** NOTE: For NAS vehicles only.

If required, carry out a long drive cycle.
For additional information, refer to: Powertrain Control Module (PCM) Long Drive Cycle Self-Test (303-14A Electronic Engine Controls - 2.5L NA V6 - AJV6/3.0L NA V6 - AJ27, General Procedures).

GETtheMANUALS.org

# Exhaust System - Catalytic Converter2.7L V6 - TdV6

Removal and Installation

## Removal

All vehicles

1. Remove the air deflector.
   For additional information, refer to: Air Deflector (501-02 Front End Body Panels, Removal and Installation).

Vehicles with diesel particulate filter (DPF)

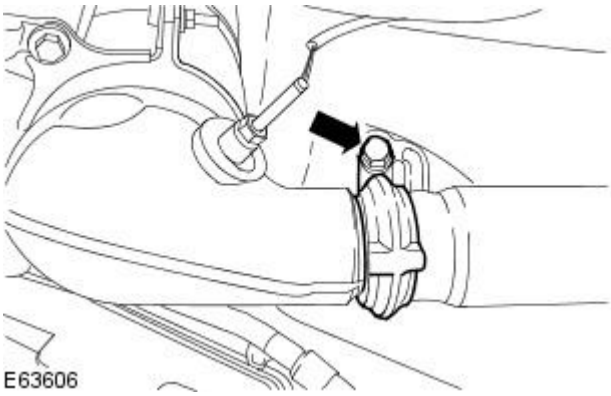


2. NOTE: Right-hand shown, left-hand similar.

   Loosen the catalytic converter to particulate filter retaining clamp.

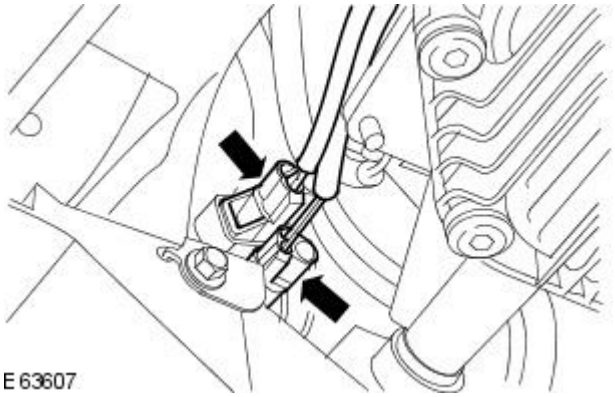


3. NOTE: Right-hand shown, left-hand similar.

   Disconnect the catalytic converter temperature sensor electrical connectors.

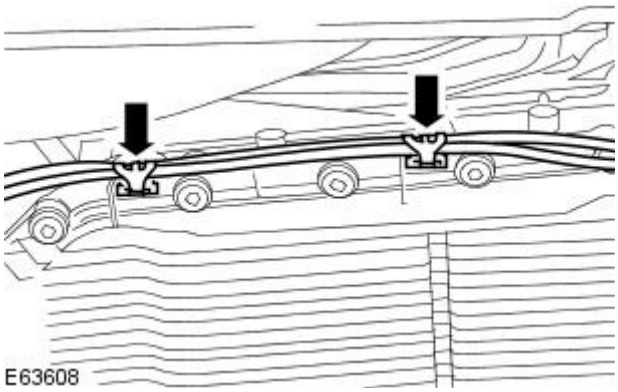


4. NOTE: Right-hand shown, left-hand similar.

   Detach the catalytic converter temperature sensor wiring harness from the transmission.

Vehicles without diesel particulate filter (DPF)

5. Remove the front muffler.
   For additional information, refer to: Front Muffler (309-00 Exhaust System, Removal and Installation).

All vehicles

GETtheMANUALS.org

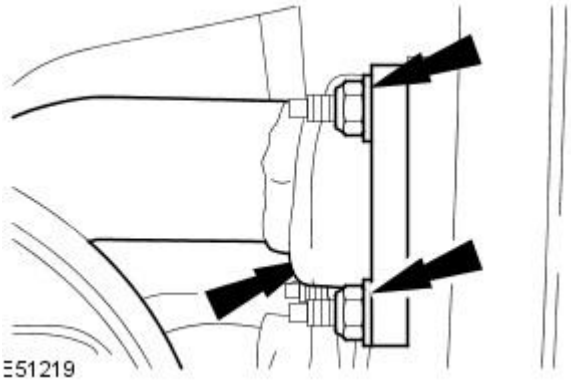


**6.** CAUTION: Make sure the catalytic converter is fully supported during removal. Failure to follow this instruction will result in damage to the catalytic converter decoupler joint.

• NOTE: Right-hand shown, left-hand similar.

Detach the catalytic converter.

- Remove and discard the retaining nuts.

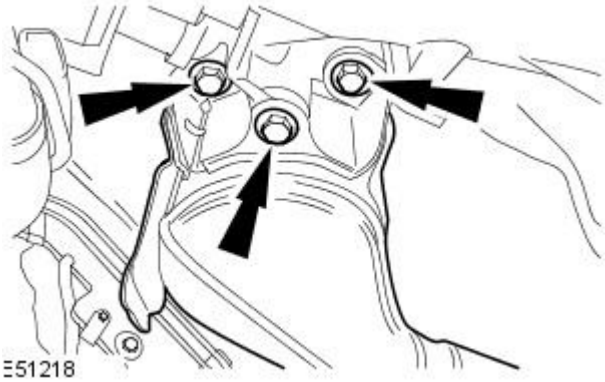


**7.** NOTE: Right-hand shown, left-hand similar.

Remove the catalytic converter.

- Remove and discard the gasket.

## Installation

Vehicles without diesel particulate filter (DPF)

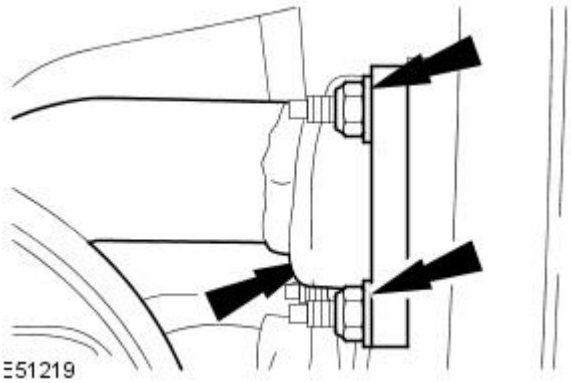


**1.** CAUTIONS:

Make sure the catalytic converter is fully supported during installation. Failure to follow this instruction will result in damage to the catalytic converter decoupler joint.

Never use jointing compound forward of the catalytic converter.

• NOTE: Right-hand shown, left-hand similar.

Install the catalytic converter.

- Install a new gasket.
- Install new retaining nuts.
- Tighten to 22 Nm.

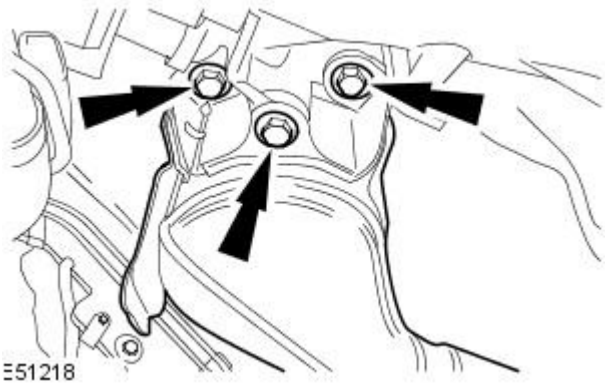


**2.** NOTE: Right-hand shown, left-hand similar.

Tighten to 22 Nm.

**3.** Install the front muffler.
For additional information, refer to: Front Muffler (309-00 Exhaust System, Removal and Installation).

Vehicles with diesel particulate filter (DPF)

GETtheMANUALS.org

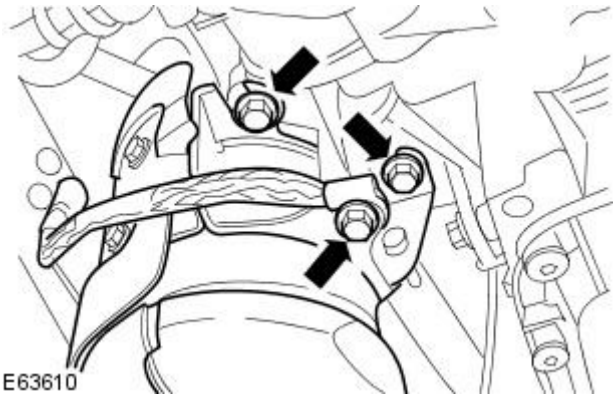


**4.** CAUTIONS:

Make sure the catalytic converter is fully supported during installation. Failure to follow this instruction will result in damage to the catalytic converter decoupler joint.

Never use jointing compound forward of the catalytic converter.

• NOTE: Right-hand shown, left-hand similar.

Loosely install the catalytic converter.

- Install a new gasket.
- Install the retaining bolts.

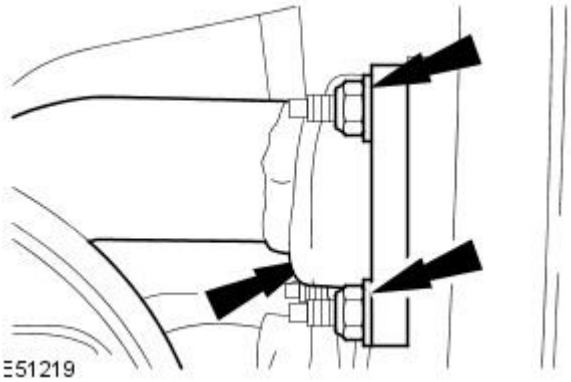


**5.** NOTE: Right-hand shown, left-hand similar.

Install new retaining nuts.

- Tighten to 22 Nm.

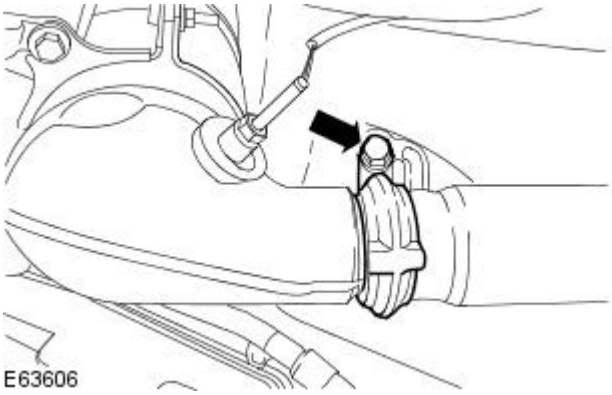


**6.** NOTE: Right-hand shown, left-hand similar.

Install the catalytic converter to particulate filter retaining clamp.

- Tighten to 11 Nm.

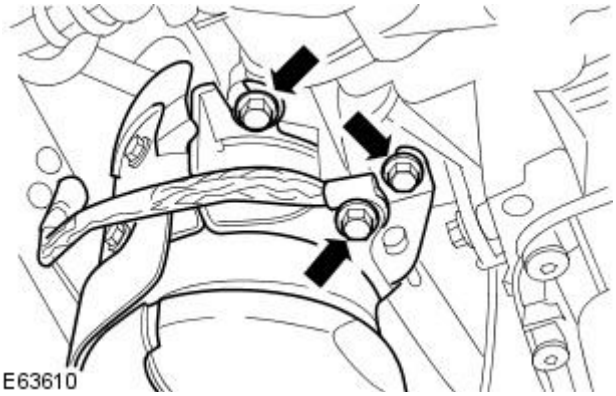


**7.** NOTE: Right-hand shown, left-hand similar.

Fully tighten the catalytic converter bracket retaining bolts.

- Tighten to 25 Nm.

• NOTE: For vehicles prior to VIN N85983, refit old fixings and tighten to 22 Nm.

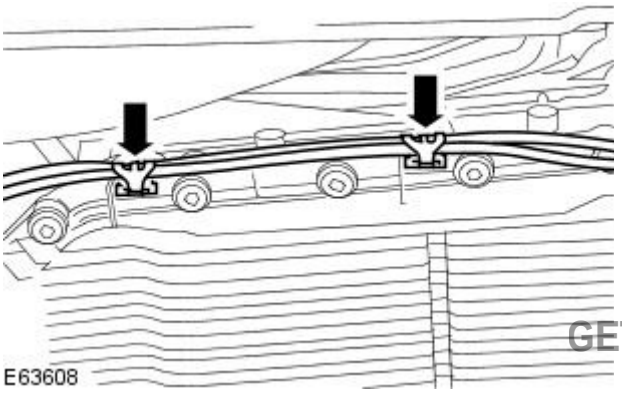


**8.** NOTE: Right-hand shown, left-hand similar.

Attach the catalytic converter temperature sensor wiring harness to the transmission.

GETtheMANUALS.org

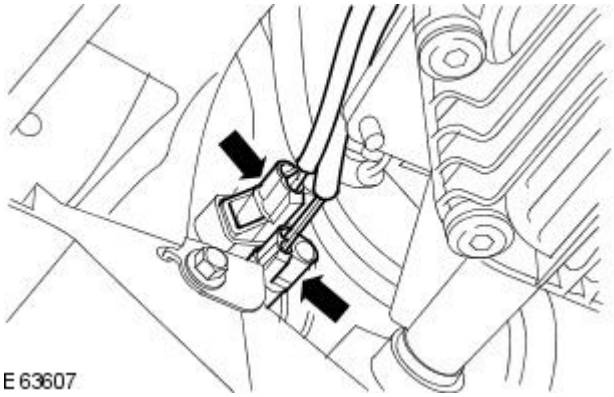


**9.** NOTE: Right-hand shown, left-hand similar.

Connect the catalytic converter temperature sensor electrical connectors.

All vehicles

**10.** Install the air deflector.
For additional information, refer to: Air Deflector (501-02 Front End Body Panels, Removal and Installation).

GETtheMANUALS.org

# Exhaust System - Diesel Particulate Filter (DPF)

Removal and Installation

## Removal

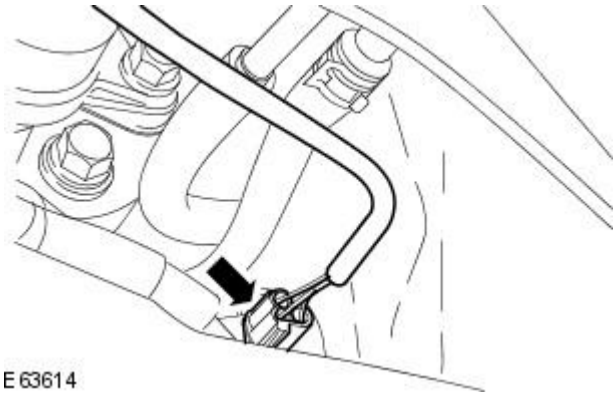


1. Raise the vehicle.
   For additional information, refer to: Lifting (100-02 Jacking and Lifting, Description and Operation).
2. Disconnect the diesel particulate filter temperature sensor electrical connector.

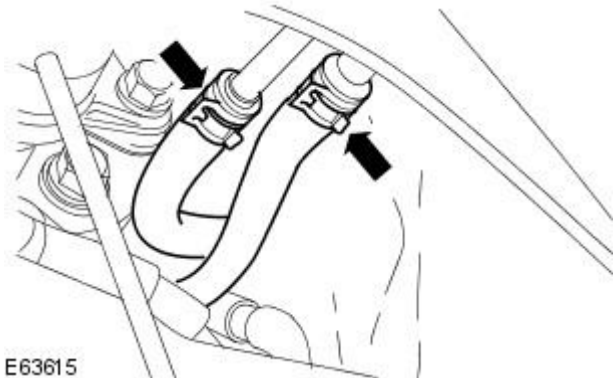


3. NOTE: Note the orientation of the diesel particulate filter high-pressure and low-pressure hoses and make sure they are installed in the same position. There is a paint mark to identify the high-pressure hose.

   Detach the diesel particulate filter high-pressure and low-pressure hoses.

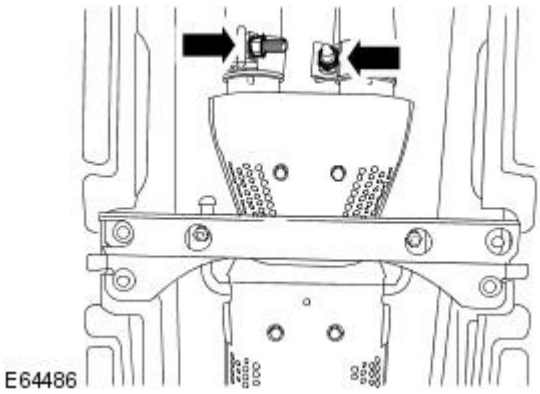


4. Loosen the diesel particulate filter to center muffler retaining clamps.

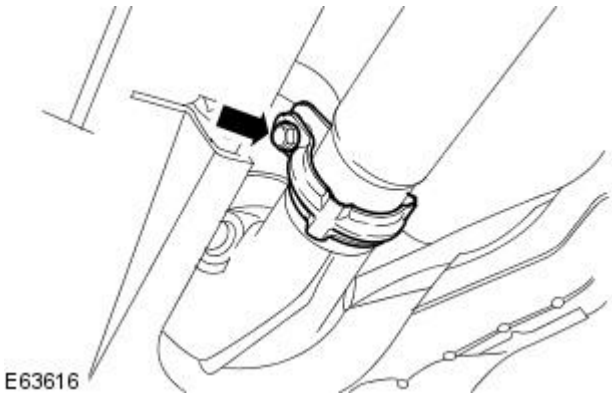


5. Remove the diesel particulate filter to right-hand catalytic convertor retaining bracket.
   - Remove and discard the gasket.

GETtheMANUALS.org

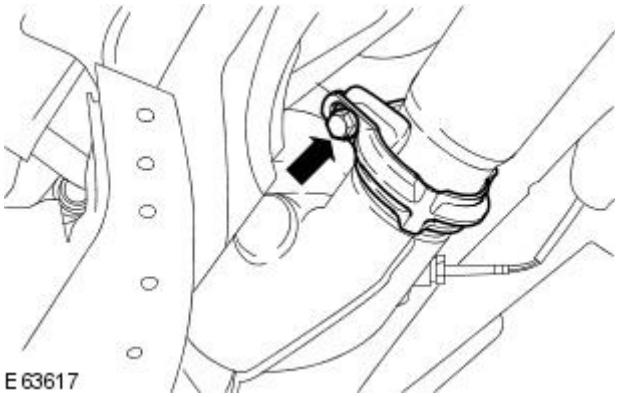


6. Remove the diesel particulate filter to left-hand catalytic convertor retaining bracket.
   - Remove and discard the gasket.

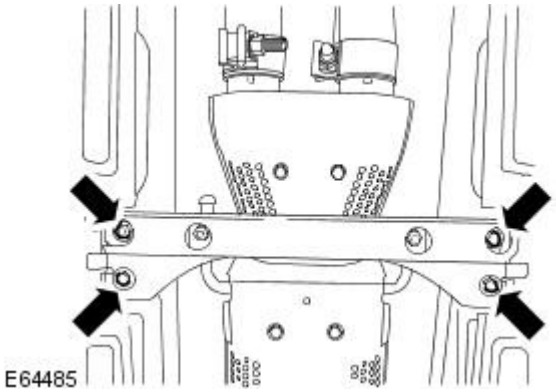


7. CAUTION: Make sure that the diesel particulate filter is supported at all times. Failure to follow this instruction may result in damage to the vehicle.

   Remove the diesel particulate filter mount bracket.
   - Remove and discard the diesel particulate filter mount bracket retaining nuts.

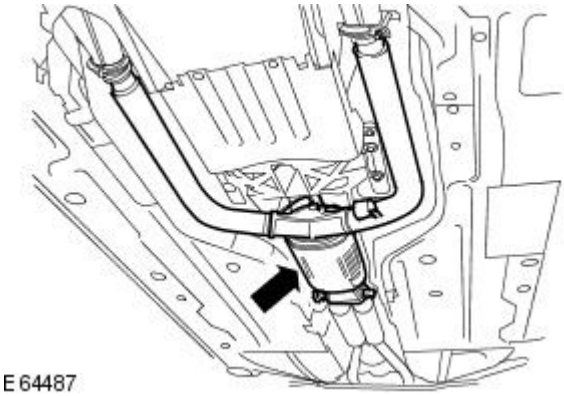


8. Using an assistant, remove the diesel particulate filter.

## Installation

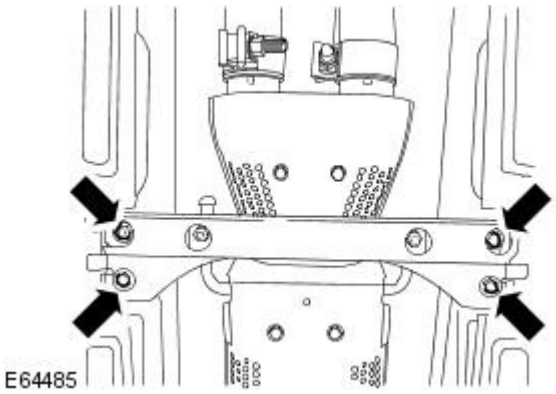


1. To install, reverse the removal procedure.
   - Tighten to 9 Nm.

GETtheMANUALS.org

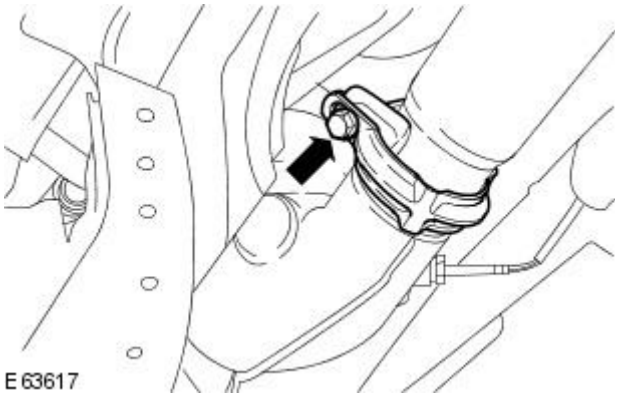


**2.** NOTE: Install a new gasket.

Tighten to 11 Nm.

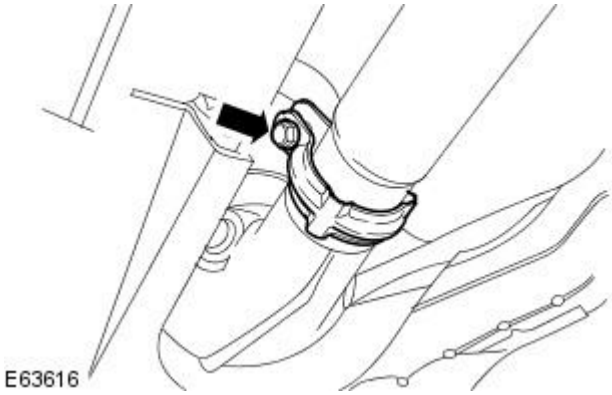


**3.** NOTE: Install a new gasket.

Tighten to 11 Nm.

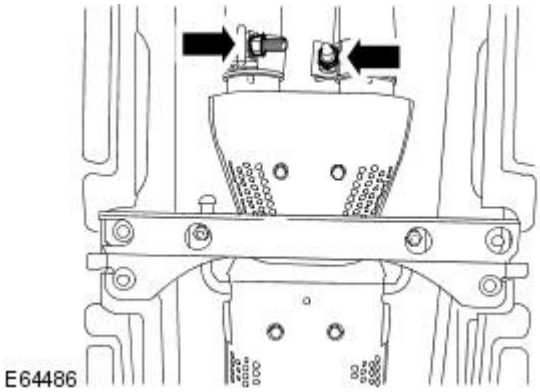


**4.** Tighten to 55 Nm.

GETtheMANUALS.org

# Exhaust System - Diesel Particulate Filter (DPF) Differential Pressure Sensor

Removal and Installation

## Removal

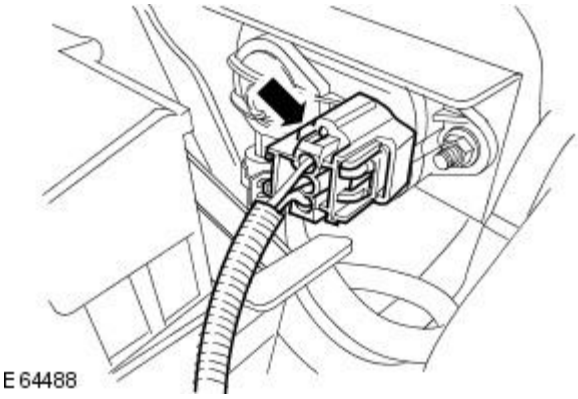


**1.** Disconnect the diesel particulate filter differential pressure sensor electrical connector.

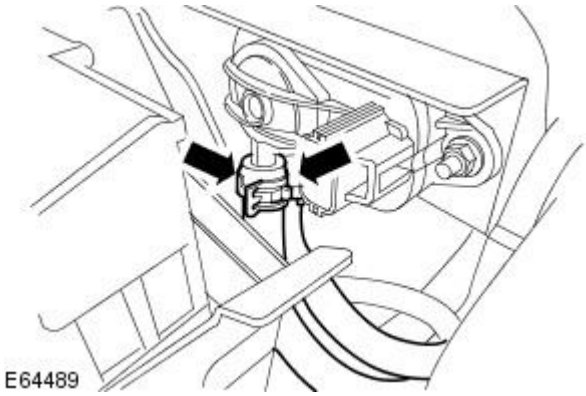


**2.** CAUTION: Make a note of the connection orientation of the high-pressure and low-pressure hoses to the sensor ports. Make sure that the hoses are located to the correct sensor port when installed. Failure to follow these instructions may result in damage to the vehicle.

Detach the diesel particulate filter differential pressure sensor high-pressure and low-pressure hoses.

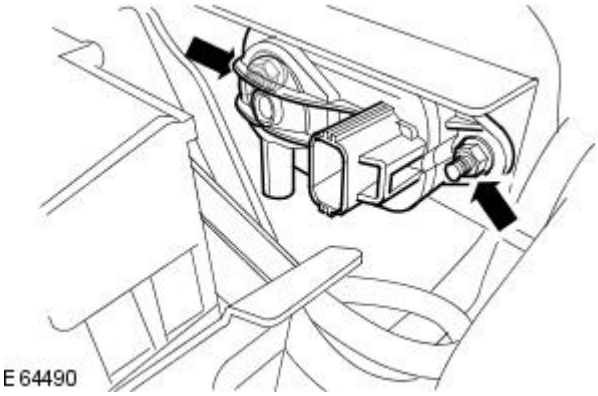


**3.** Remove the diesel particulate filter differential pressure sensor.

## Installation

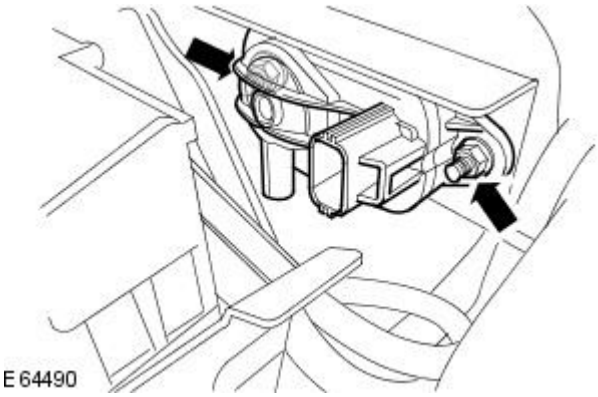


**1.** CAUTION: Make sure that the high-pressure and low-pressure hoses are fully installed and the retaining clips are positioned in their original position.

To install, reverse the removal procedure.

- Tighten to 5 Nm.

GETtheMANUALS.org

# Exhaust System - Exhaust SystemV8 4.2L Petrol / V8 S/C 4.2L Petrol / 2.5L NA V6 - AJV6 / 3.0L NA V6 - AJ27

Removal and Installation

## Removal

1. Raise and support the vehicle.
   For additional information, refer to Section 100-02 Jacking and Lifting.
2. Remove the support bracket.

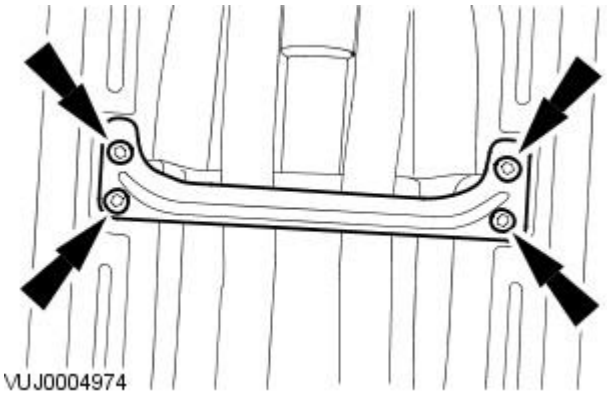


3. Support the exhaust system with suitable stands.
4. NOTE: Left-hand shown, right-hand similar.

   Disconnect the heated oxygen sensor (HO2S) electrical connector.

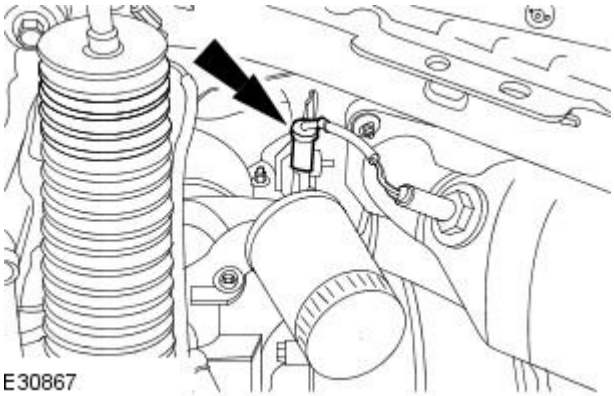


5. NOTE: Left-hand shown, right-hand similar.

   Disconnect the catalyst monitor sensor electrical connector.

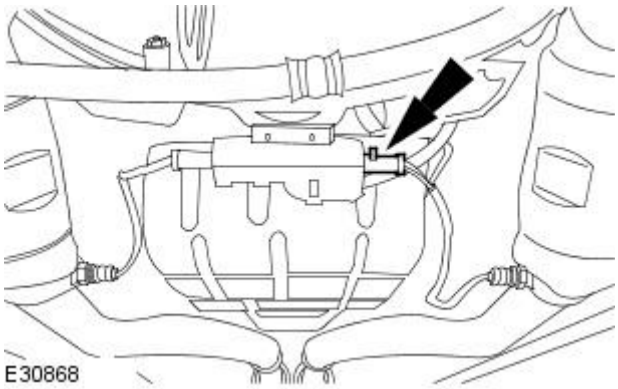


6. NOTE: Right-hand shown, left-hand similar.

   Detach the catalytic converter.

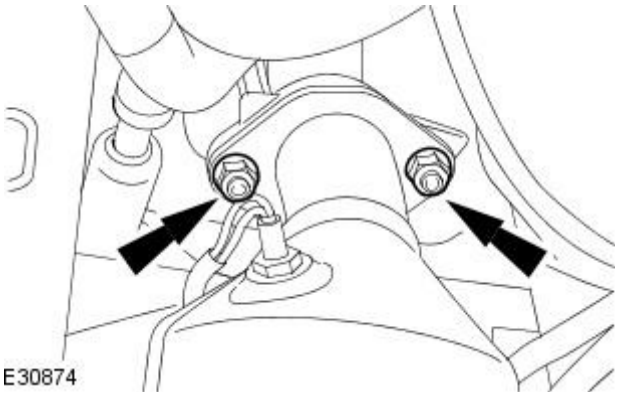


GETtheMANUALS.org

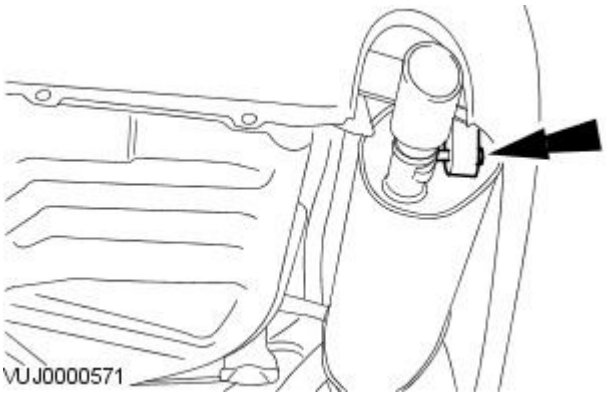


**7.** NOTE: Right-hand shown, left-hand similar.

Detach the muffler and tailpipe hanger insulators.

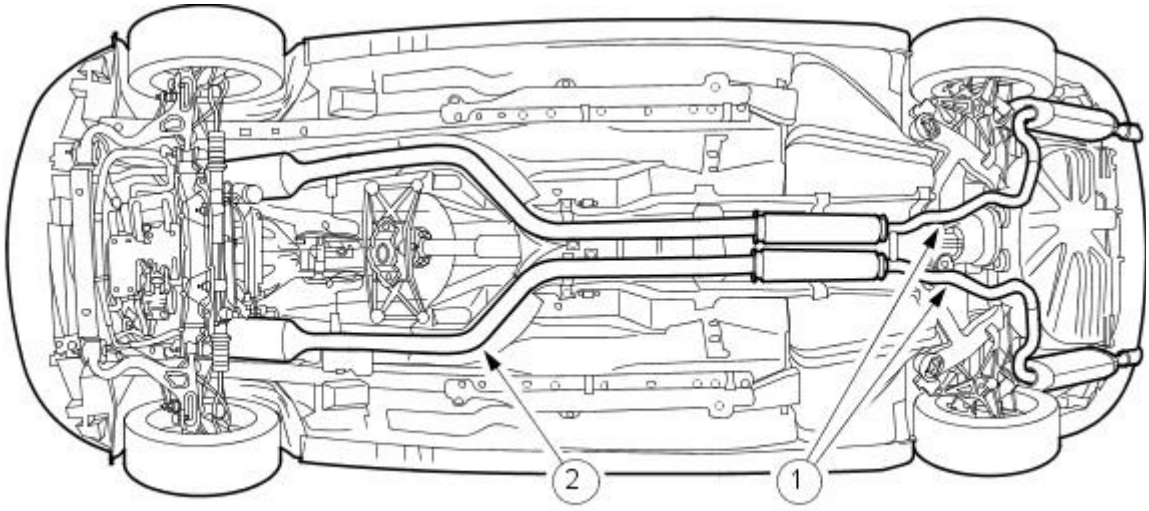


**8.** Remove the exhaust system.

1. Detach both front muffler hanger insulators.
2. Remove the exhaust system.

## Installation

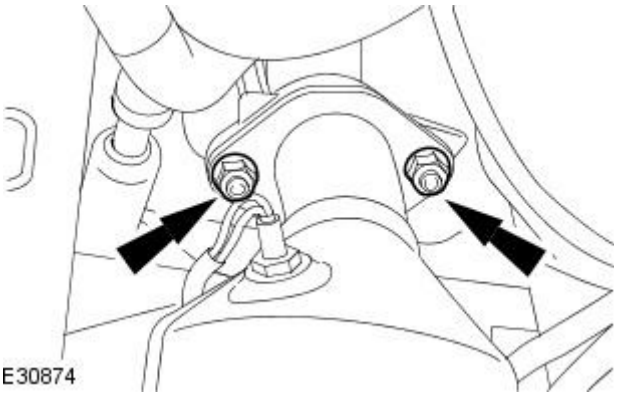


**1.** NOTE: Right-hand shown, left-hand similar.

To install, reverse the removal procedure.

- Tighten to 40 Nm.

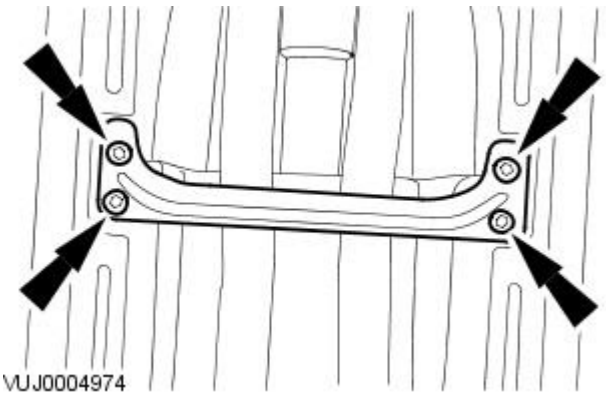


**2.** Tighten to 6 Nm.

GETtheMANUALS.org

# Exhaust System - Front Muffler

Removal and Installation

## Removal

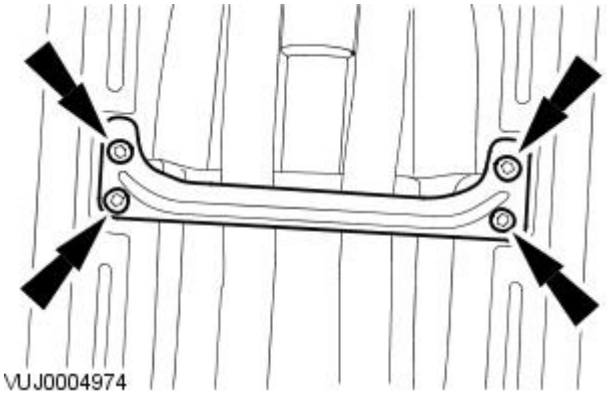


1. Remove both muffler and tailpipes.
   For additional information, refer to Muffler and Tailpipe in this section.
2. Remove the support bracket.

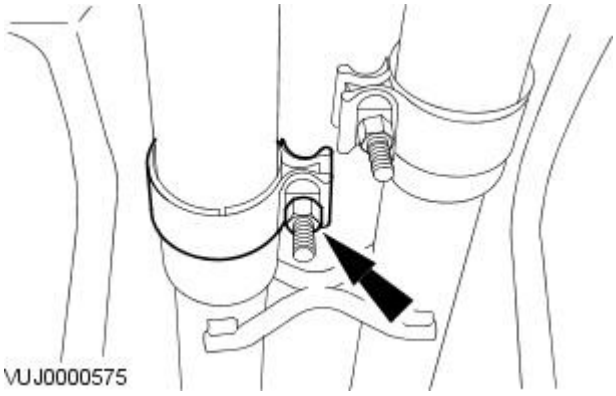


3. Support the exhaust system using suitable stands.
4. NOTE: Left-hand shown, right-hand similar.

   Loosen both catalytic converter retaining clamps.

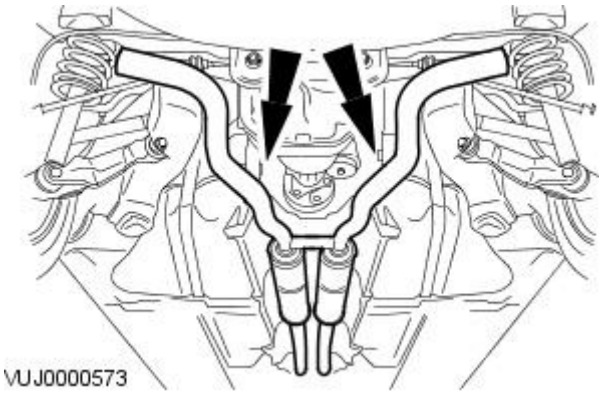


5. NOTE: Detach both front muffler hanger insulators.

   Remove the front muffler.

## Installation

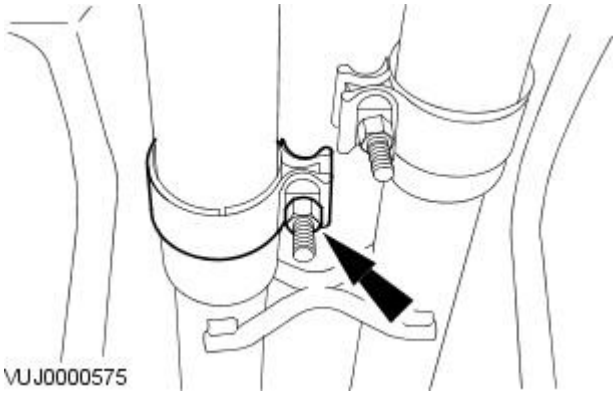


1. CAUTION: The hanger insulators are constructed of a special material. Use only the correct specification insulators.

• NOTE: Check the hanger insulators for damage or fatigue. Install new hangers if required.

To install, reverse the removal procedure.

- Tighten to 55 Nm.

GETtheMANUALS.org

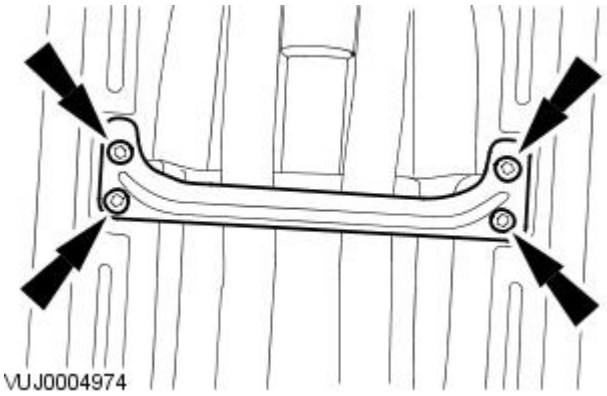


**2.** Tighten to 6 Nm.

GETtheMANUALS.org

# Exhaust System - Muffler and Tailpipe

Removal and Installation

## Removal

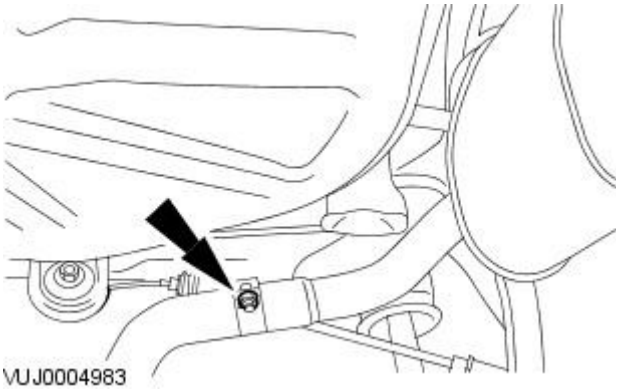


1. Raise and support the vehicle.
   For additional information, refer to Section 100-02 Jacking and Lifting.
2. Loosen the muffler and tailpipe retaining clamp.

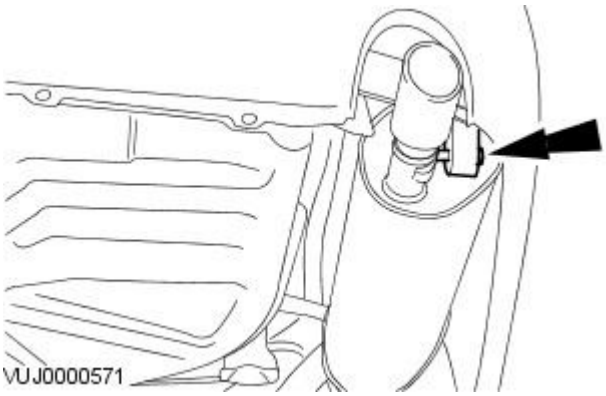


3. Detach the muffler and tailpipe hanger insulator.

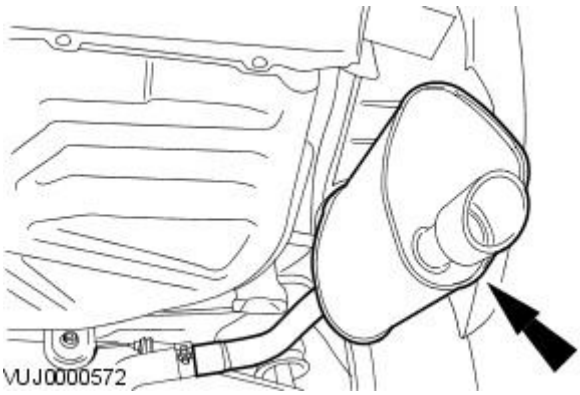


4. Remove the muffler and tailpipe.

## Installation

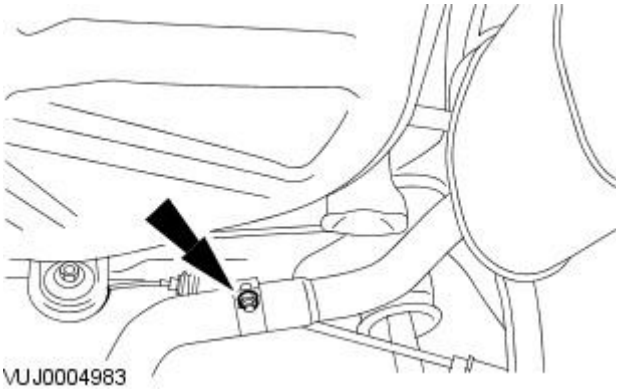


1. CAUTION: The hanger insulators are constructed of a special material. Use only the correct specification insulators.

• NOTE: Check the hanger insulators for damage or fatigue. Install new hangers if required.

• NOTE: Make sure the muffler and tailpipe is central in the bumper aperture.

To install, reverse the removal procedure.

- Tighten to 55 Nm.

GETtheMANUALS.org

Published: 11-May-2011

# Fuel System - General Information -

**General Specifications**

| Item | Specification |
|---|---|
| Fuel tank capacity | 69.5 liters |

GETtheMANUALS.org

# Fuel System - General Information - Fuel SystemVIN Range: M45255->N52047

Description and Operation

Vehicles with supercharger

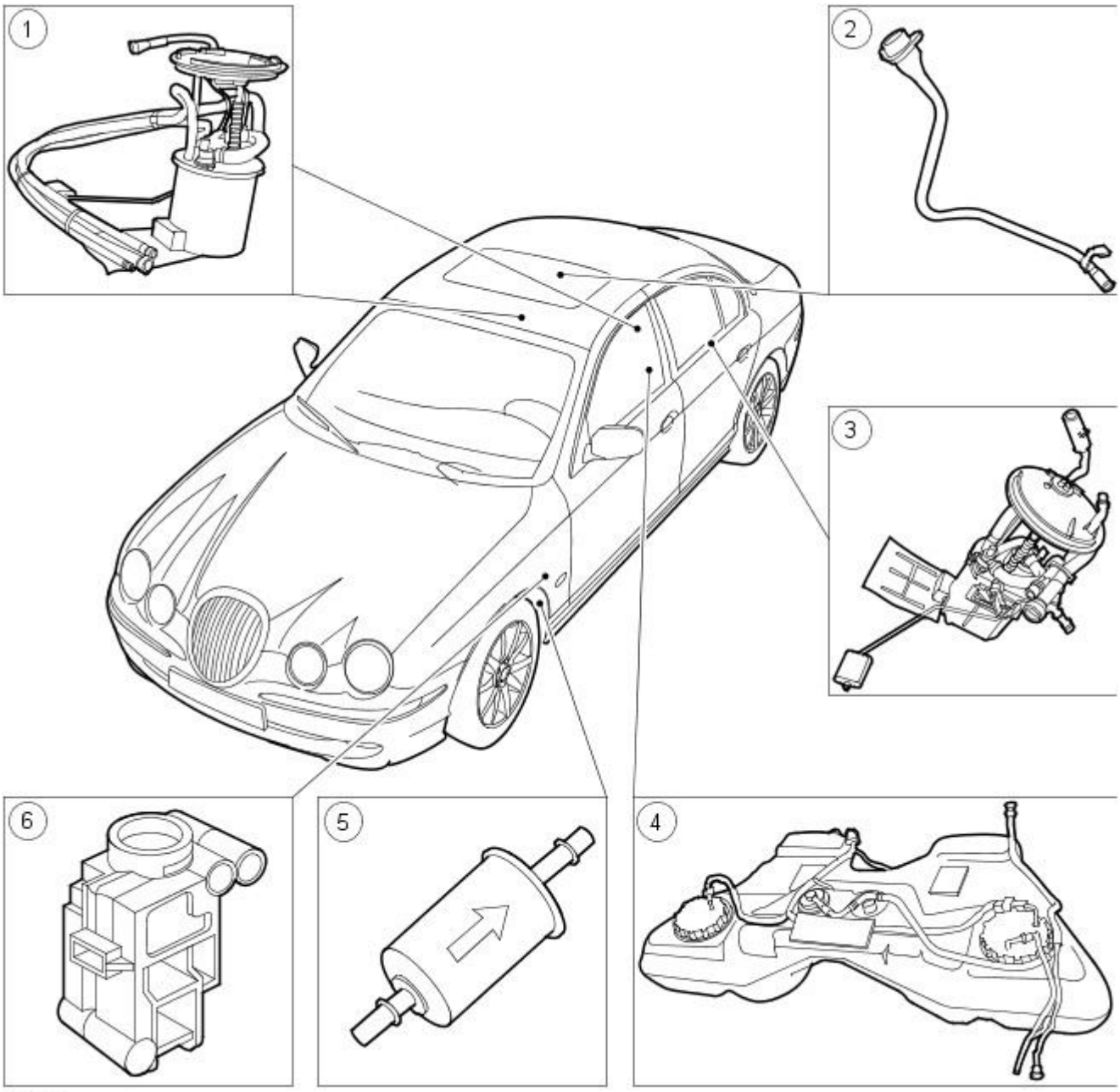


| Item | Part Number | Description |
|---|---|---|
| 1 | — | Right-hand side fuel pump module |
| 2 | — | Fuel tank filler pipe |
| 3 | — | Left-hand side fuel pump module |
| 4 | — | Fuel tank |
| 5 | — | Fuel filter |
| 6 | - | Inertia fuel shutoff (IFS) switch |

Vehicles without supercharger

GETtheMANUALS.org

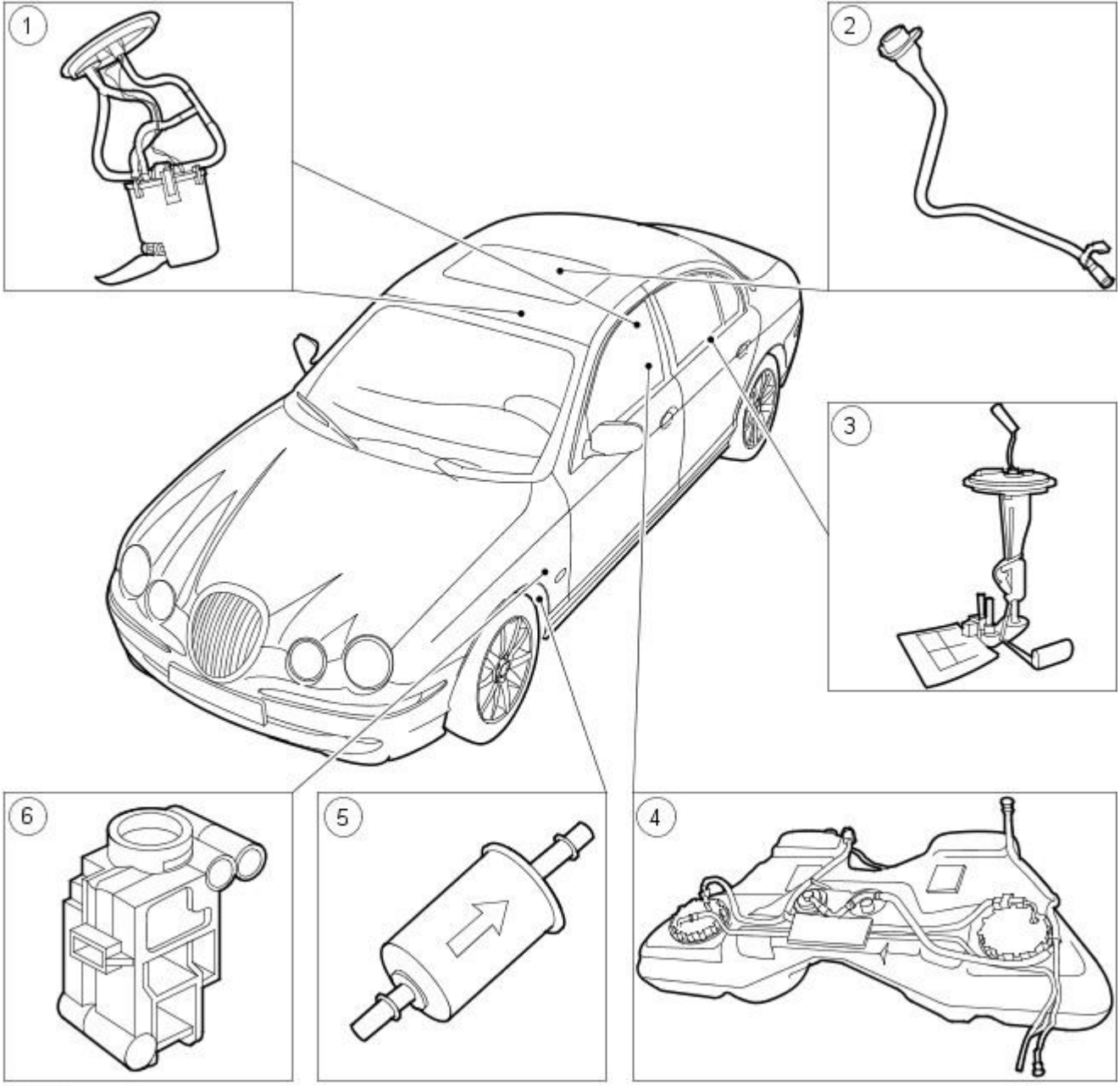


| Item | Part Number | Description |
|---|---|---|
| 1 | - | Fuel pump module |
| 2 | - | Fuel tank filler pipe |
| 3 | - | Fuel transfer pump |
| 4 | - | Fuel tank |
| 5 | - | Fuel filter |
| 6 | - | Inertia fuel shutoff (IFS) switch |

Fuel System - Except Vehicles with Diesel Engine

The electronic returnless fuel system utilized has the following advantages:

- reduced fuel tank vapor.
- requires less electrical power.
- does not require a fuel return line.

The intelligence of this system is contained within the engine control module (ECM).

The ECM determines the required fuel flow and communicates this information to the rear electronic module (REM). The REM has the fuel pump driver functions fully integrated into the microprocessor. The fuel pump relay is activated by the ECM power relay and provides a fused power supply to the REM. The ECM and the REM calculates the frequency and determines the current required by the fuel pump to maintain the correct fuel pressure at the fuel injectors.

The fuel tank is of a saddle design which incorporates a pump/sender unit in both sides of the tank on vehicles with superchargers. On vehicles without superchargers, the right-hand side houses the fuel pump module and the left-hand side houses the fuel transfer pump. The fuel pump cross over lines are internal to the fuel tank to reduce potential leak paths.

Fuel is supplied at high pressure to the injectors via a fuel rail which incorporates a fuel pressure and a fuel temperature sensor. The ECM increases the fuel pressure to minimise fuel vapor formation to maintain fuel flow across the injectors. An inertia type fuel shutoff switch will cut power to the fuel pump in the event of an accident.

Vehicles with Diesel Engine

GETtheMANUALS.org

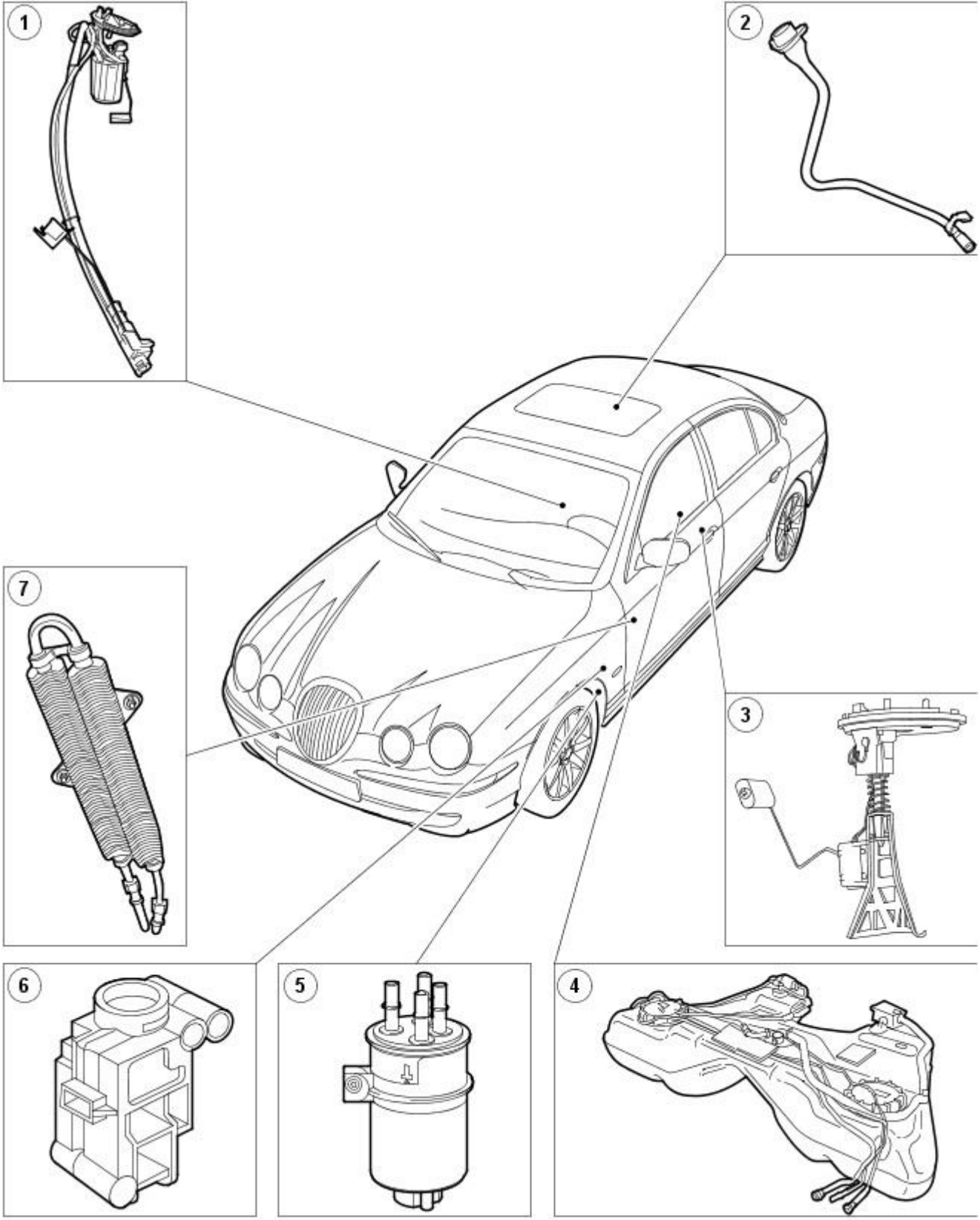


E52631

| Item | Part Number | Description |
|---|---|---|
| 1 | — | Fuel pump module |
| 2 | — | Fuel tank filler pipe |
| 3 | — | Fuel level sensor |
| 4 | — | Fuel tank |
| 5 | — | Fuel filter |
| 6 | — | Inertia fuel shutoff (IFS) switch |
| 7 | — | Fuel Cooler |

Fuel System - Vehicles with Diesel Engine

The diesel fuel is drawn from the fuel tank by an internal electric lift pump which is supplied with battery voltage from the fuel pump relay located in the rear power distribution box. The fuel pump relay is controlled by the ECM. The fuel pump provides a low pressure diesel fuel supply to the transfer pump incorporated in to the fuel injection pump. The fuel metering valve (FMV) governs the amount of fuel supplied to the fuel injection pump. The fuel injection pump has a fuel return circuit to the fuel filter, which is independent of the injector return pipes.

The fuel tank is of a saddle design which incorporates a fuel pump module and fuel level sensor in the right-hand side and a fuel level sensor module in the left-hand side of the tank. The fuel pump cross over lines are internal to the fuel tank to reduce potential leak paths. The signals from the fuel level sensors are used both for the fuel gauge and the run dry prevention strategy within the ECM.

GETtheMANUALS.org

The driver will always be aware of the risk of running out of fuel as the fuel gauge will show empty and the fuel warning lamp will be illuminated. In order to protect the fuel lift pump and fuel injection pump and to prevent the need for fuel priming after the vehicle has run

out of fuel, the ECM will instigate the run dry prevention strategy prior to the fuel tank becoming completely empty. In order to recognize the fuel tank becoming empty, a low level switch is incorporated in to the fuel tank swirl pot. The signal from this switch, together with the signal from two fuel level sensors is relayed to the ECM, via the controller area network (CAN) bus.

Before a run dry event occurs the ECM will take a series of actions to inform the driver of the low fuel level in the fuel tank.

| Fuel remaining in fuel tank | Approximate distance remaining* | Action |
|---|---|---|
| 9·4 L | 112 Km (70 Miles) | **Low Fuel** warning lamp illuminated in instrument cluster |
| 5·2 L | 48 Km (30 Miles) | Fuel gauge reads **Empty**; **RANGE** display reads **0 Km (0 Miles)** |
| 3·9 L | 28 Km (18 Miles) | ECM simulates engine misfire |
| 3·7 L | 25 Km (16 Miles) | Engine is stopped but restarts with misfire |
| 2·0 L | 0 Km (0 Miles) | Engine stops and will not restart |

* Dependant on average fuel consumption

If, when the ignition key is turned to the **ON** position, the run dry event is still detected, this would indicate that either no, or insufficient, fuel has been added to the fuel tank, or that the vehicle may be parked on a slope. In this instance the fuel pump will run to fill the swirl pot and cover the low fuel level switch. The ECM will not prevent the engine from cranking, but it will inhibit fuel injection. If, after a delay, a run dry event is still detected, the fuel pump will be inhibited for the rest of the ignition cycle. As soon as a run dry event is no longer detected normal starting can resume.

GETtheMANUALS.org

# Fuel System - General Information - Fuel SystemVIN Range: N52048->N99999

Description and Operation

Vehicles without Diesel Engine

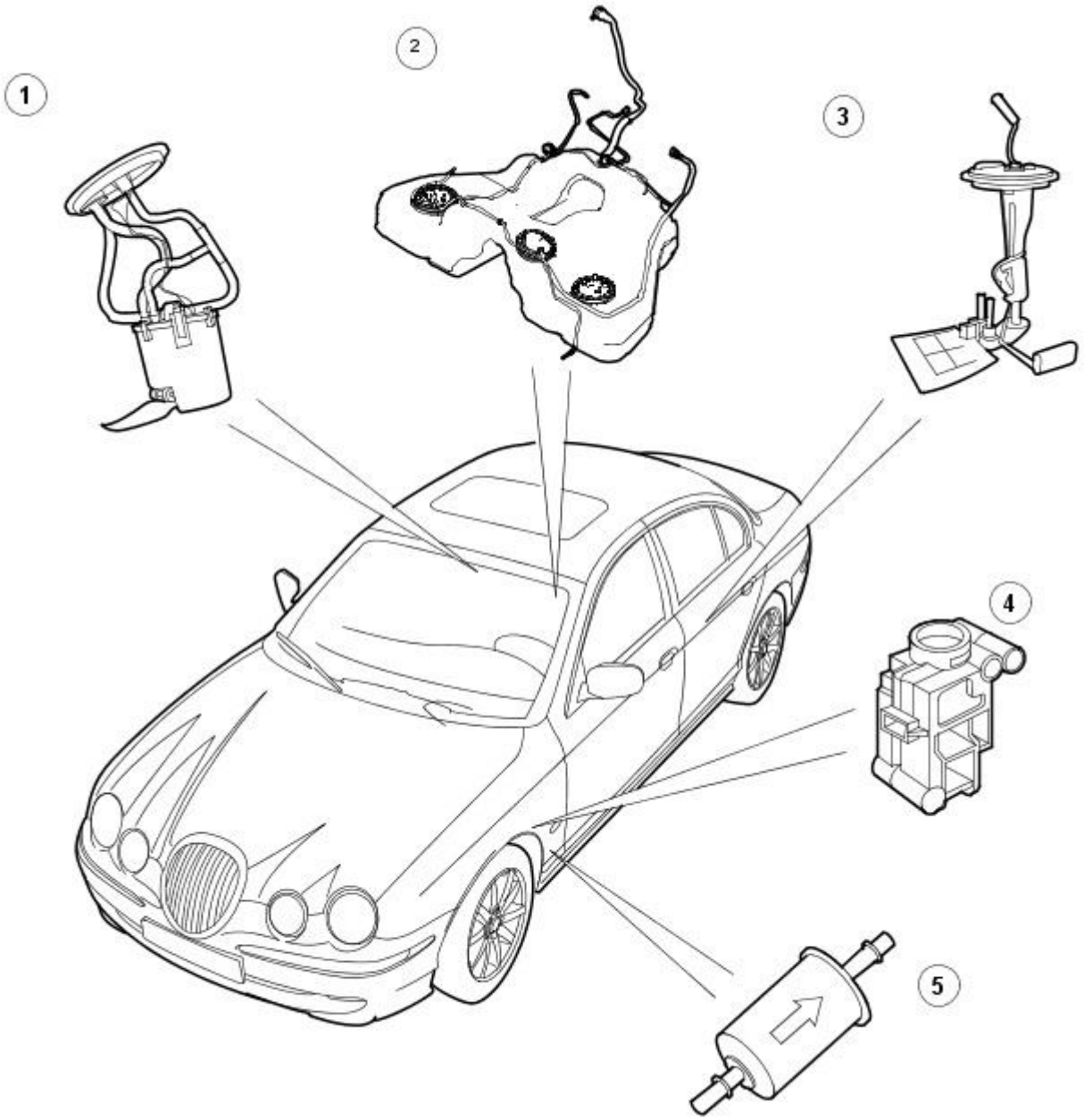


E64140

| Item | Part Number | Description |
|---|---|---|
| 1 | - | Fuel pump module |
| 2 | - | Fuel tank |
| 3 | - | Fuel transfer module |
| 4 | - | Inertia fuel shut-off (IFS) switch |
| 5 | - | Fuel filter |

Fuel System - Vehicles without Diesel Engine

The electronic returnless fuel system utilized has the following advantages:

- reduced fuel tank vapor
- requires less electrical power
- does not require a fuel return line.

The intelligence of this system is contained within the engine control module (ECM).

The ECM determines the required fuel flow and communicates this information to the rear electronic module (REM). The REM has the fuel pump driver functions fully integrated into the microprocessor. The fuel pump relay is activated by the ECM power relay and provides a fused power supply to the REM. The ECM and the REM calculates the frequency and determines the current required by the fuel pump to maintain the correct fuel pressure at the fuel injectors.

The fuel tank is of a saddle design which incorporates a fuel pump module on the right-hand side and a fuel transfer module on the left-hand side. The fuel pump crossover lines are internal to the fuel tank to reduce potential leak paths.

Fuel is supplied at high pressure to the injectors through a fuel rail which incorporates a fuel pressure and a fuel temperature sensor. The ECM increases the fuel pressure to minimise fuel vapor formation to maintain fuel flow across the injectors. An inertia type fuel shut-off switch will cut power to the fuel pump in the event of an accident.

GETtheMANUALS.org

Vehicles with Diesel Engine

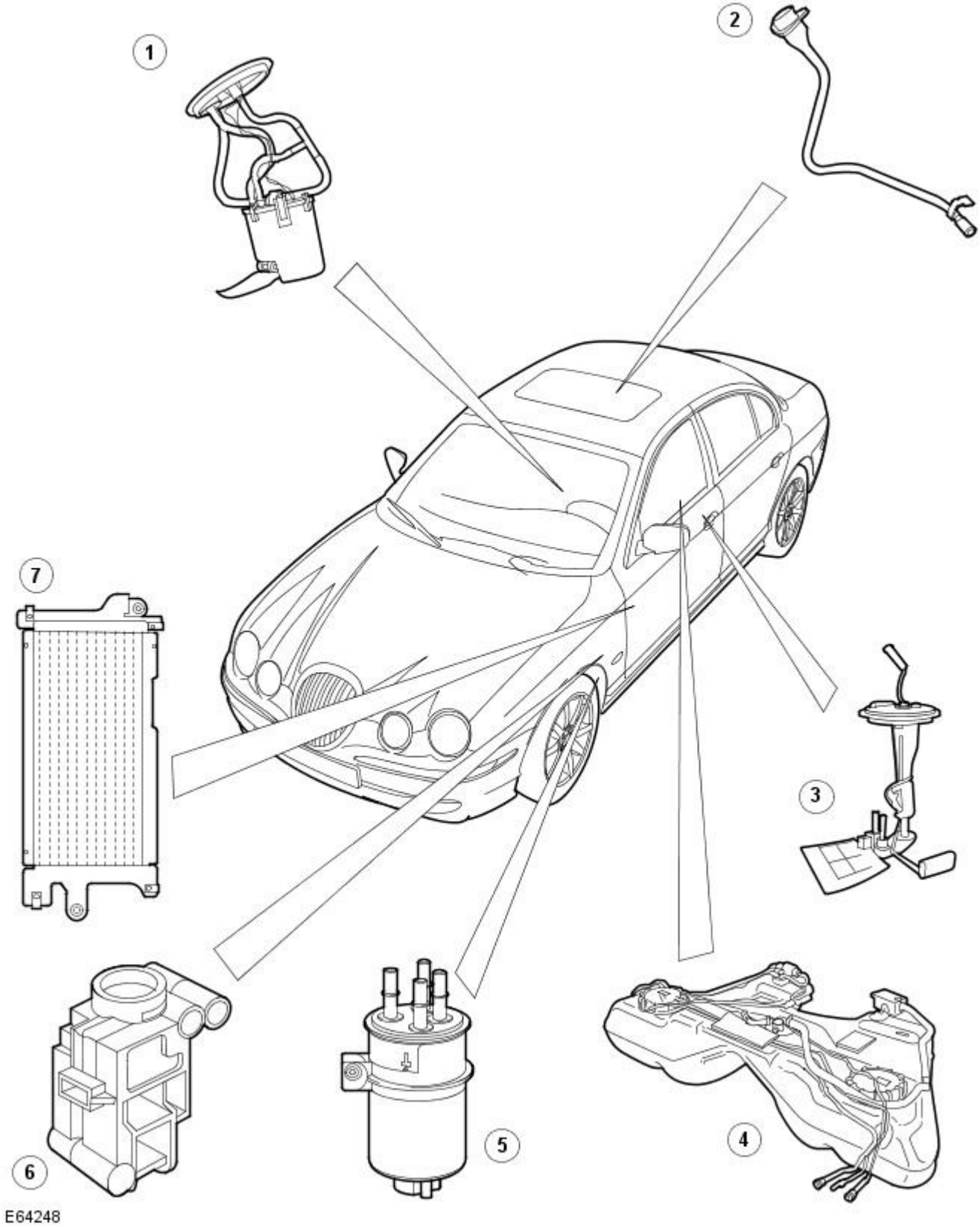


| Item | Part Number | Description |
|---|---|---|
| 1 | — | Fuel pump module |
| 2 | — | Fuel tank filler pipe |
| 3 | — | Fuel level sensor |
| 4 | — | Fuel tank |
| 5 | — | Fuel filter |
| 6 | — | Inertia fuel shut-off (IFS) switch |
| 7 | — | Fuel Cooler |

Fuel System - Vehicles with Diesel Engine

The diesel fuel is drawn from the fuel tank by an internal electric lift pump which is supplied with battery voltage from the fuel pump relay located in the rear power distribution box. The fuel pump relay is controlled by the ECM. The fuel pump provides a low pressure diesel fuel supply to the transfer pump incorporated in to the fuel injection pump. The fuel metering valve (FMV) governs the amount of fuel supplied to the fuel injection pump. The fuel injection pump has a fuel return circuit to the fuel filter, which is independent of the injector return pipes.

The fuel tank is of a saddle design which incorporates a fuel pump module and fuel level sensor in the right-hand side and a fuel level sensor module in the left-hand side of the tank. The fuel pump crossover lines are internal to the fuel tank to reduce potential leak paths. The signals from the fuel level sensors are used both for the fuel gauge and the run dry prevention strategy within the ECM.

GETtheMANUALS.org

The driver will always be aware of the risk of running out of fuel as the fuel gauge will show empty and the fuel warning lamp will be illuminated. In order to protect the fuel lift pump and fuel injection pump and to prevent the need for fuel priming after the vehicle has run

out of fuel, the ECM will instigate the run dry prevention strategy prior to the fuel tank becoming completely empty. In order to recognize the fuel tank becoming empty, a low level switch is incorporated in to the fuel tank swirl pot. The signal from this switch, together with the signal from two fuel level sensors is relayed to the ECM, through the controller area network (CAN) bus.

Before a run dry event occurs the ECM will take a series of actions to inform the driver of the low fuel level in the fuel tank.

| Fuel remaining in fuel tank | Approximate distance remaining* | Action |
|---|---|---|
| 9·4 L | 112 Km (70 Miles) | **Low Fuel** warning lamp illuminated in instrument cluster |
| 5·2 L | 48 Km (30 Miles) | Fuel gauge reads **Empty**; **RANGE** display reads **0 Km (0 Miles)** |
| 3·9 L | 28 Km (18 Miles) | ECM simulates engine misfire |
| 3·7 L | 25 Km (16 Miles) | Engine is stopped but restarts with misfire |
| 2·0 L | 0 Km (0 Miles) | Engine stops and will not restart |

* Dependant on average fuel consumption

If, when the ignition key is turned to the **ON** position, the run dry event is still detected, this would indicate that either no, or insufficient, fuel has been added to the fuel tank, or that the vehicle may be parked on a slope. In this instance the fuel pump will run to fill the swirl pot and cover the low fuel level switch. The ECM will not prevent the engine from cranking, but it will inhibit fuel injection. If, after a delay, a run dry event is still detected, the fuel pump will be inhibited for the rest of the ignition cycle. As soon as a run dry event is no longer detected normal starting can resume.

GETtheMANUALS.org

# Fuel System - General Information - Fuel System

Diagnosis and Testing

1. **1.** Verify the customer concern by operating the system.
2. **2.** Visually inspect for obvious signs of mechanical or electrical damage.
3. **3.** If an obvious cause for an observed or reported concern is found, correct the cause (if possible) before proceeding to the next step.
4. **4.** If the concern is not visually evident, refer to the Symptom Chart.

**Symptom Chart**

| Symptom | Possible Sources | Action |
|---|---|---|
| P1233, P1235, —Fuel Pump Primary Circuit Failure | * Damaged relay.<br>* Damaged harness.<br>* Connector loose or corroded.<br>* Connector pins(s) bent or tracking between connections.<br>* Damaged ground.<br>* 'Popped' inertia switch. | * GO to Pinpoint Test A. |
| B1201, P0460, —Fuel Sender Circuit Failure | * Worn or damaged sensor tracks.<br>* Damaged Harness.<br>* Connector loose or corroded.<br>* Connector pin(s) bent or tracking between connections.<br>* Fuel level sensor to instrument cluster circuits intermittent short or open circuit or high resistance.<br>* Fuel level sensor failure.<br>* Instrument cluster fault (incorrect fuel level data). | * GO to Pinpoint Test B. |

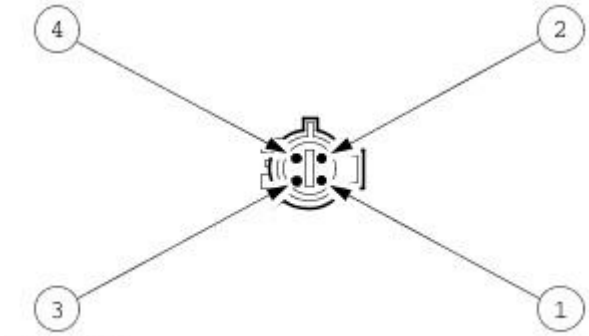


VUJ0002070

**Fuel Pump Harness Connector**

| Pin Number | Circuit Function | Circuit Color |
|---|---|---|
| 1 | Right-hand fuel level sensor signal supply | White/red |
| 2 | Fuel pump voltage supply | Green/orange |
| 3 | Right-hand fuel level sensor voltage supply | Brown/red |
| 4 | Fuel pump GROUND supply | Brown/red |

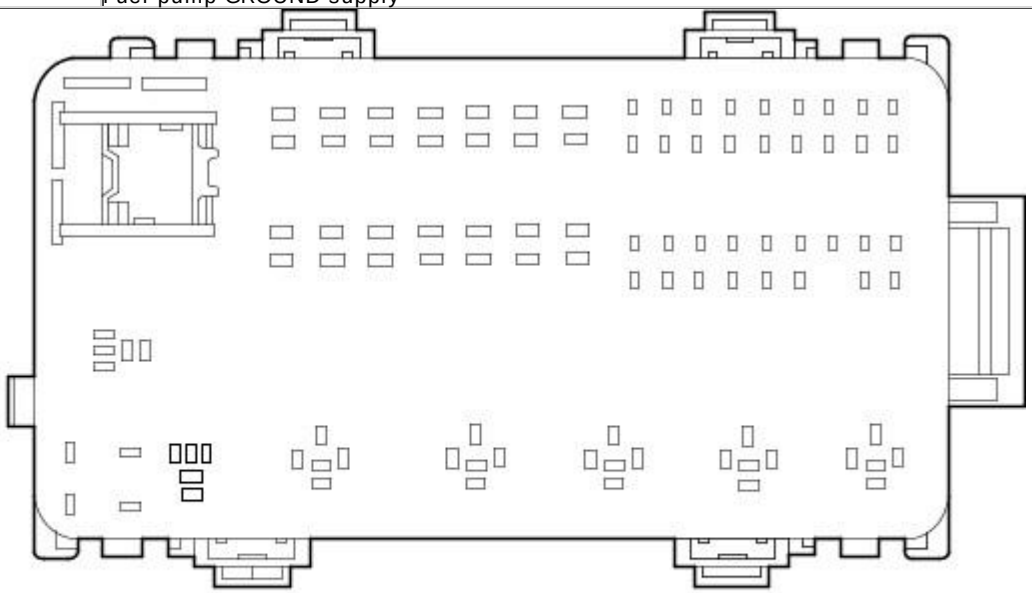

VUJ0002071

**Fuel Pump Diode Connector**

| Pin Number | Circuit Function | Circuit Color |
|---|---|---|
| 1 | Fuel pump relay voltage supply | Red |
| 2 | Fuel pump diode voltage supply | Green/white |

GETtheMANUALS.org

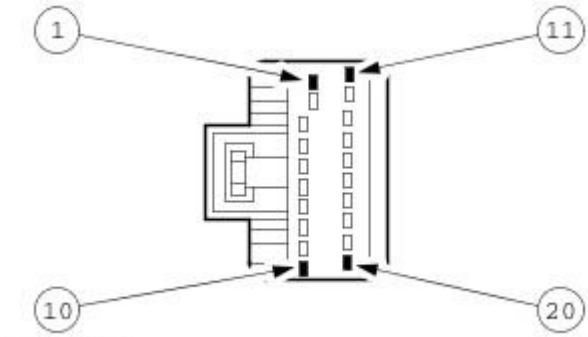

VUJ0002073

**Rear Electronic Module Harness Connector**

| Pin Number | Circuit Function | Circuit Color |
|---|---|---|
| 1 | Voltage supply from the fuel pump relay | Green/orange |
| 2 | Rear electronic module GROUND supply | Brown |
| 11 | Fuel pump voltage supply | Green/orange |
| 12 | Fuel pump GROUND supply | Brown/red |

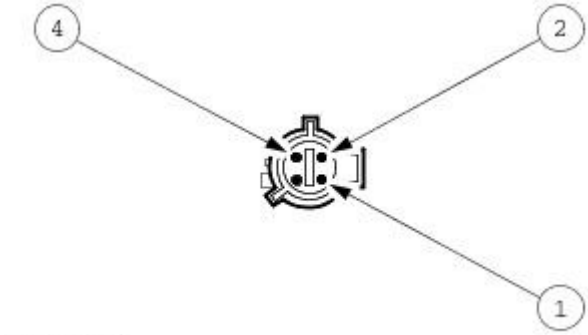

VUJ0002075

**Left-hand Side Fuel Level Sensor Harness Connector**

| Pin Number | Circuit Function | Circuit Color |
|---|---|---|
| 1 | Left-hand fuel level sensor voltage supply | Brown/blue |
| 3 | Left-hand fuel level sensor signal supply | White/blue |

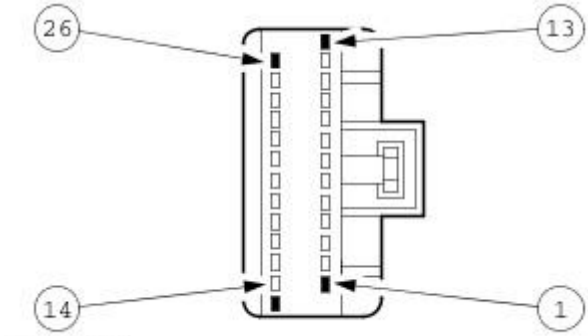

VUJ0002074

**Rear Electronic Module Harness Connector**

| Pin Number | Circuit Function | Circuit Color |
|---|---|---|
| 23 | Fuel sensors voltage supply | Brown/red |

| PINPOINT TEST A : P1233, P1235—FUEL PUMP PRIMARY CIRCUIT FAILURE | |
|---|---|
| **TEST CONDITIONS** | **DETAILS/RESULTS/ACTIONS** |
| **A1: AUDIBLE CHECK OF THE FUEL PUMP RELAY** | |
| | 1 LOCATE the fuel pump relay at the rear power distribution box. |
| | 2 Audibly CHECK the fuel pump relay for a clicking noise, while an assistant switches the ignition switch to the RUN position. |
| | Is the fuel pump relay clicking?<br>**Yes**<br>GO to A2.<br>**No**<br>GO to A4. |
| **A2: CHECK THE POSITIVE SUPPLY TO THE FUEL PUMP** | |
| | 1 Switch the ignition to the OFF position. |
| | 2 Disconnect the fuel pump electrical connector FP4. |
| | 3 Switch the ignition to the RUN position. |
| | 4 Measure the pulse width modulation voltage between the fuel pump electrical connector FP4 pin 1, (GO) and ground. |
| | Is there a 1 second, 12 volts voltage signal after the ignition is switched on?<br>**Yes**<br>GO to A3.<br>**No**<br>GO to A9. |
| **A3: CHECK THE GROUND SUPPLY TO THE FUEL PUMP** | |
| | 1 Switch the ignition to the OFF position. |
| | 2 Measure the resistance between the fuel pump electrical connector FP4 pin 3, (BR) and ground. |

GETtheMANUALS.org

| | |
|---|---|
| | Is the resistance less than 0.5 Ohms?<br>**Yes**<br>INSTALL a new fuel pump. CLEAR DTC. TEST the system for normal operation.<br>**No**<br>GO to A11. |
| **A4: CHECK THE POSITIVE SUPPLY TO THE FUEL PUMP RELAY** | |
| | 1 REMOVE the fuel pump relay at the rear power distribution box. |
| | 2 Switch the ignition to the RUN position. |
| | 3 Measure the voltage at the fuel pump relay electrical connector pin 1. |
| | Is the voltage less than 10.5 Volts?<br>**Yes**<br>GO to A5.<br>**No**<br>GO to A13. |
| **A5: CHECK THE POSITIVE SUPPLY TO THE FUEL PUMP DIODE** | |
| | 1 Switch the ignition to the OFF position. |
| | 2 REMOVE the fuel pump diode at the rear distribution box. |
| | 3 Switch the ignition to the RUN position. |
| | 4 Measure the voltage between the fuel pump diode electrical connector CA61 pin G2, (GW) and GROUND. |
| | Is the voltage less than 10.5 Volts?<br>**Yes**<br>GO to A6.<br>**No**<br>INSTALL a new fuel pump diode. CLEAR DTC. TEST the system for normal operation. |
| **A6: CHECK THE POSITIVE SUPPLY TO FUSE 4 AT THE PRIMARY JUNCTION BOX** | |
| | 1 Measure the voltage at the positive supply side of fuse 4 at the primary junction box. |
| | Is the voltage less than 10.5 Volts?<br>**Yes**<br>TEST the voltage supply to the primary junction box from ignition switch.<br>**No**<br>GO to A7. |
| **A7: CHECK THE VOLTAGE SUPPLY BETWEEN THE INPUT SIDE OF INERTIA SWITCH AND OUTPUT SIDE OF FUSE 4 AT THE PRIMARY JUNCTION BOX** | |
| | 1 Switch the ignition to the OFF position. |
| | 2 Measure the resistance between fuse 4 at the primary junction box and the fuel shut-off inertia switch electrical connector CA4 pin X2, (GO). |
| | Is the resistance less than 0.5 Ohms?<br>**Yes**<br>GO to A8.<br>**No**<br>REPAIR the inertia fuel shut-off switch supply circuit. CLEAR DTC. TEST the system for normal operation. |
| **A8: CHECK THE CONTINUITY BETWEEN THE OUTPUT SIDE OF INERTIA SWITCH AND THE POSITIVE SUPPLY TO FUEL PUMP DIODE** | |
| | 1 Measure the resistance between the inertia fuel shut-off switch electrical connector CA4 pin X3, (GW) the fuel pump diode electrical connector CA61 pin G2, (GW). |
| | Is the resistance less than 0.5 Ohms?<br>**Yes**<br>INSTALL a new fuel inertia shut-off switch.<br>**No**<br>REPAIR the circuit between the inertia fuel shut-off switch electrical connector CA4 pin X3, (GW) and the fuel pump diode electrical connector CA61 pin G2, (GW). CLEAR DTC. TEST the system for normal operation. |
| **A9: CHECK THE SWITCHABLE VOLTAGE SUPPLY TO THE FUEL PUMP RELAY** | |
| | 1 Switch the ignition to the OFF position. |
| | 2 REMOVE the fuel pump relay at the rear power distribution box. |
| | 3 Switch the ignition to the RUN position. |
| | 4 Measure the voltage at the fuel pump relay electrical connector pin 3 (R). |
| | Is the voltage less than 10.5 Volts?<br>**Yes**<br>GO to A10.<br>**No**<br>GO to A14. |
| **A10: CHECK THE FUEL PUMP RELAY SWITCHABLE VOLTAGE SUPPLY FUSE** | |
| | 1 Measure the voltage at the fuel pump relay switchable voltage supply fuse. |
| | Is the voltage less than 10.5 Volts?<br>**Yes**<br>TEST the rear power distribution box power supply. CLEAR DTC. TEST the system for normal operation.<br>**No**<br>REPAIR the circuit between the rear power distribution box electrical connector CA61 pin X34, (R) and the fuel pump relay electrical connector pin 3, (R). CLEAR DTC. TEST the system for normal operation. |
| **A11: CHECK THE CONTINUITY BETWEEN THE FUEL PUMP GROUND SUPPLY AND THE REAR ELECTRONIC MODULE** | |
| | 1 Measure the resistance between the fuel pump electrical connector FP4 pin 3, (BR) and the rear electronic module CA101 pin 12, (BR). |
| | Is the resistance less than 0.5 Ohms?<br>**Yes**<br>GO to A12.<br>**No**<br>REPAIR the circuit between the fuel pump electrical connector FP4 pin 3, (BR) and rear electronic module electrical connector CA101 pin 12, (BR). CLEAR DTC. TEST the system for normal operation. |
| **A12: CHECK THE CONTINUITY BETWEEN THE REAR ELECTRONIC MODULE AND GROUND** | |
| | 1 Measure the resistance between the rear electronic module electrical connector CA101 pin 02, (B) and GROUND CA156, (B). |
| | Is the resistance less than 0.5 Ohms?<br>**Yes**<br>GO to A16.<br>**No**<br>REPAIR the circuit between the rear electronic module CA101 pin 02, (B) and GROUND CA156, (B). CLEAR DTC. TEST the system for normal operation. |

GETtheMANUALS.org

| A13: CHECK THE GROUND SUPPLY TO THE FUEL PUMP RELAY | |
|---|---|
| | 1 Switch the ignition to the OFF position. |
| | 2 Measure the resistance between the fuel pump relay pin 2 (B) and GROUND CA116 (B). |
| | Is the resistance less than 0.5 Ohms?<br>**Yes**<br>INSTALL a new fuel pump relay. CLEAR DTC. TEST the system for normal operation.<br>**No**<br>REPAIR the circuit between the fuel pump relay pin 2 (B) and GROUND CA116 (B). CLEAR DTC. TEST the system for normal operation. |
| **A14: CHECK THE VOLTAGE OUTPUT AT THE FUEL PUMP RELAY** | |
| | 1 Switch the ignition to the OFF position. |
| | 2 INSTALL the fuel pump relay at the rear power distribution box. |
| | 3 Switch the ignition to the RUN position. |
| | 4 Measure the output voltage from the fuel pump relay electrical connector pin 5 at the rear electronic module electrical connector CA101 pin 01, (GO). |
| | Is the voltage greater than 10.5 Volts?<br>**Yes**<br>GO to A15.<br>**No**<br>INSTALL a new fuel pump relay. CLEAR DTC. TEST the system for normal operation. |
| **A15: CHECK THE CONTINUITY BETWEEN THE REAR ELECTRONIC MODULE AND THE FUEL PUMP** | |
| | 1 Measure the resistance between the rear electronic module electrical connector CA101 pin 11, (GO) and fuel pump electrical connector FP4 pin 1, (GO). |
| | Is the resistance less than 0.5 Ohms?<br>**Yes**<br>INSTALL a new rear electronics module. CLEAR DTC. TEST the system for normal operation.<br>**No**<br>REPAIR the circuit between the rear electronic module electrical connector CA101 pin 11, (GO) and the fuel pump electrical connector FP4 pin 1, (GO). CLEAR DTC. TEST the system for normal operation. |
| **A16: CHECK THE CONTINUITY OF THE REAR ELECTRONIC MODULE SIGNAL SUPPLY CIRCUIT** | |
| | 1 Disconnect the engine control module (ECM) electrical connector FH1. |
| | 2 Disconnect the rear electronic module electrical connector CA103. |
| | 3 Measure the resistance between the ECM electrical connector FH1 pin 58, (WP) and the rear electronic module electrical connector CA103 pin 19, (WP). |
| | Is the resistance less than 0.5 Ohms?<br>**Yes**<br>REPAIR the circuit between the ECM electrical connector FH1 pin 58, (WP) and the rear electronic module electrical connector CA103 pin 19, (WP).<br>**No**<br>INSTALL a new rear electronics module. CLEAR DTC. TEST the system for normal operation. |

| PINPOINT TEST B : B1201, P0460—FUEL SENDER CIRCUIT FAILURE | |
|---|---|
| **TEST CONDITIONS** | **DETAILS/RESULTS/ACTIONS** |
| **B1: CHECK THE VOLTAGE SUPPLY TO THE FUEL LEVEL SENSORS** | |
| | 1 Switch the ignition to the RUN position. |
| | 2 Measure the voltage at the fuel level sensor electrical connector between:<br>● FP3 pin 4, (NR) and GROUND<br>● FP4 pin 4, (NR) and GROUND |
| | Is the voltage greater than 10.5 Volts?<br>**Yes**<br>GO to B2.<br>**No**<br>GO to B4. |
| **B2: CHECK THE GROUND SUPPLY TO THE FUEL LEVEL SENSORS** | |
| | 1 Switch the ignition to the OFF position. |
| | 2 Measure the resistance at the fuel level sensor electrical connector between:<br>● FP3 pin 2, (WU) and GROUND<br>● FP4 pin 2, (WR) and GROUND |
| | Is the resistance less than 0.5 Ohms?<br>**Yes**<br>GO to B3.<br>**No**<br>REPAIR the relevant circuit. CLEAR DTC. TEST system for normal operation. |
| **B3: CHECK THE RESISTANCE AT THE RIGHT-HAND SIDE FUEL LEVEL SENSOR** | |
| | 1 REMOVE the right-hand side fuel level sensor. For additional information, refer to Section 310-01 Fuel Tank and Lines |
| | 2 Measure the resistance between the sensor electrical connectors FP4 pin 4 and FP4 pin 2. |
| | Is the resistance between 16 and 160 Ohms?<br>**Yes**<br>INSTALL a new left-hand side fuel level sensor. CLEAR DTC. TEST the system for normal operation.<br>**No**<br>INSTALL a new right-hand side fuel level sensor. CLEAR DTC. TEST the system for normal operation. |
| **B4: CHECK THE CONTINUITY BETWEEN THE FUEL LEVEL SENSOR ELECTRICAL CONNECTOR FP3-4, FP4-4 AND CA103-23 AT THE REAR ELECTRONICS MODULE** | |
| | 1 Switch the ignition to the OFF position. |
| | 2 Measure the fuel level sensor positive supply circuit resistance between:<br>● FP3 pin 4, (NU) and CA103 pin 23, (NR)<br>● FP4 pin 4, (NR) and CA103 pin 23, (NR) |
| | Is the resistance less than 0.5 Ohms?<br>**Yes**<br>INSTALL a new rear electronic module. CLEAR DTC. TEST the system for normal operation.<br>**No** |

GETtheMANUALS.org

| | |
|---|---|
| | REPAIR the relevant circuit. CLEAR DTC. TEST the system for normal operation. |

GETtheMANUALS.org

# Fuel System - General Information - Fuel System Pressure Check

General Procedures

All vehicles

• NOTE: This procedure is for the installation of the adaptor into the fuel line due to the removal of the schraeder valve from the fuel line.

**1.** WARNINGS:

Place the vehicle in a quarantined area and arrange "No Smoking/Petrol Fumes" signs about the vehicle.

Before any work is carried out on the fuel system, ground the vehicle to earth and maintain the ground connection until the work is complete.

Do not smoke or carry lighted tobacco or open flame of any type when working on or near any fuel related components. Highly flammable vapors are always present and may ignite. Failure to follow these instructions may result in personal injury.

Do not carry or operate cellular phones when working on or near any fuel related components. Highly flammable vapors are always present and may ignite. Failure to follow these instructions may result in personal injury.

The fuel system remains pressurized for a long time after the ignition is switched off. The fuel pressure must be relieved before attempting any repairs. Failure to follow these instructions may result in personal injury.

This procedure involves fuel handling. Be prepared for fuel spillage at all times and always observe fuel handling precautions. Failure to follow these instructions may result in personal injury.

After carrying out repairs, the fuel system must be checked visually for leaks. Failure to follow these instructions may result in personal injury.

Disconnect the battery ground cable.
For additional information, refer to: Battery Disconnect and Connect (414-01 Battery, Mounting and Cables, General Procedures).

**2.** Remove the engine cover.

Vehicles with 2.5L or 3.0L engine

**3.** Remove the air cleaner outlet pipe.
For additional information, refer to: Air Cleaner Outlet Pipe - VIN Range: N52048->N99999 (303-12A Intake Air Distribution and Filtering - 2.5L NA V6 - AJV6/3.0L NA V6 - AJ27, Removal and Installation).

**4.** Detach the power steering fluid reservoir and reposition.

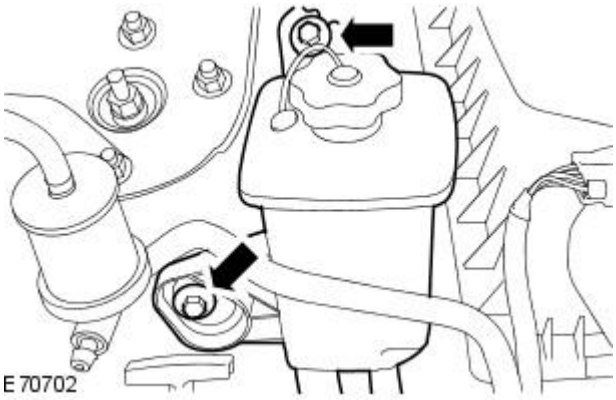


Vehicles with supercharger

GETtheMANUALS.org

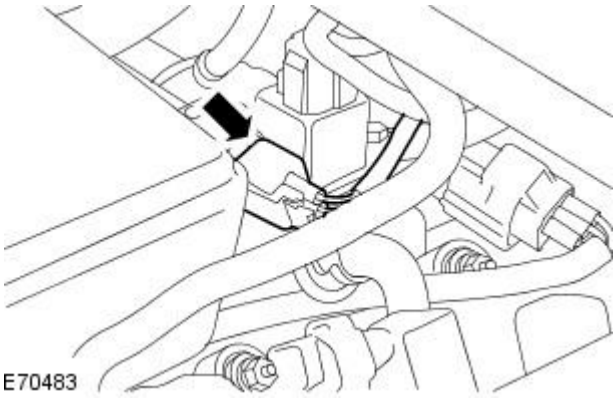


**5.** Disconnect the electrical connector.

All vehicles

**6.** Disconnect the fuel rail feed pipe.
For additional information, refer to: Spring Lock Couplings (310-00 Fuel System - General Information, General Procedures).

Vehicles with 2.5L or 3.0L engine

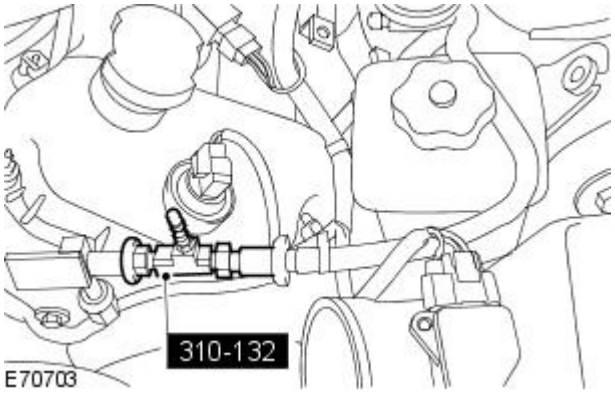


**7.** NOTE: Make sure the special tool is fully seated to the fuel pipe connections.

Install the special tool.

Vehicles with supercharger

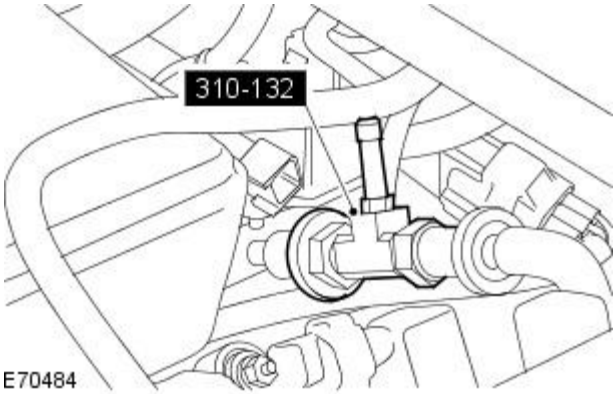


**8.** NOTE: Make sure the special tool is fully seated to the fuel pipe connections.

Install the special tool.

Vehicles with 4.0L or 4.2L engine without supercharger

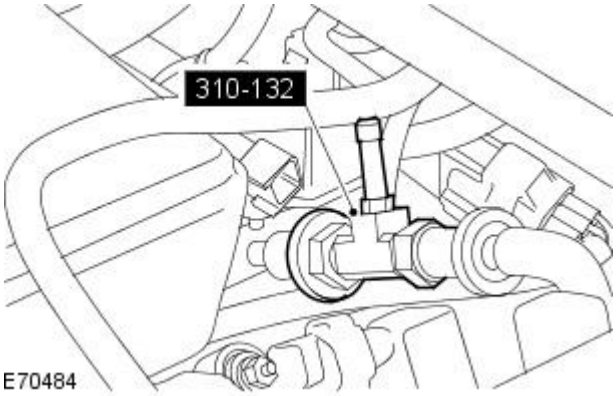


**9.** NOTE: Make sure the special tool is fully seated to the fuel pipe connections.

Install the special tool.

All vehicles

GETtheMANUALS.org

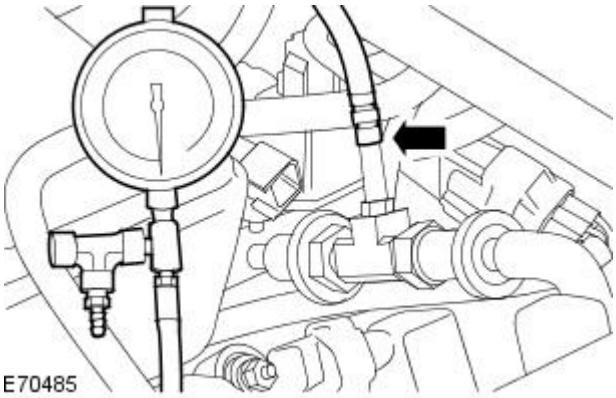


**10.** NOTE: Vehicles with supercharger shown, others vehicles similar.

Install the fuel pressure gauge.

Vehicles with 2.5L or 3.0L engine

**11.** Install the air cleaner outlet pipe.
For additional information, refer to: Air Cleaner Outlet Pipe - VIN Range: N52048->N99999 (303-12A Intake Air Distribution and Filtering - 2.5L NA V6 - AJV6/3.0L NA V6 - AJ27, Removal and Installation).

All vehicles

**12.** Connect the battery ground cable.
For additional information, refer to: Battery Connect (414-01 Battery, Mounting and Cables, General Procedures).

**13.** Carry out the fuel system pressure check.
For additional information, refer to: Fuel Charging and Controls - VIN Range: N52048->N99999 (303-04A Fuel Charging and Controls - 2.5L NA V6 - AJV6/3.0L NA V6 - AJ27, Diagnosis and Testing) / Fuel Charging and Controls - VIN Range: N52048->N99999 (303-04B Fuel Charging and Controls - V8 4.2L Petrol/V8 S/C 4.2L Petrol, Diagnosis and Testing).

GETtheMANUALS.org

# Fuel System - General Information - Fuel System Pressure Release

General Procedures

| Special Tool(s) | |
|---|---|
| 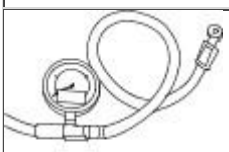 310012 | Fuel Pressure Gauge<br><br>310-012 (JD209) |

**1.** WARNINGS:

Place the vehicle in a quarantined area and arrange "No Smoking/Petrol Fumes" signs about the vehicle.

Before any work is carried out on the fuel system, ground the vehicle to earth and maintain the ground connection until the work is complete.

Do not smoke or carry lighted tobacco or open flame of any type when working on or near any fuel related components. Highly flammable vapors are always present and may ignite. Failure to follow these instructions may result in personal injury.

The fuel system remains pressurized for a long time after the ignition is switched off. The fuel pressure must be relieved before attempting any repairs. Failure to follow these instructions may result in personal injury.

After carrying out repairs, the fuel system must be checked visually for leaks. Failure to follow these instructions may result in personal injury.

This procedure involves fuel handling. Be prepared for fuel spillage at all times and always observe fuel handling precautions. Failure to follow these instructions may result in personal injury.

If taken internally do not induce vomiting, seek immediate medical attention. Failure to follow these instructions may result in personal injury.

If fuel contacts the eyes, flush the eyes with cold water or eyewash solution and seek medical attention.

Wash hands thoroughly after handling, as prolonged contact may cause irritation. Should irritation develop, seek medical attention.

Disconnect the battery ground cable.

**2.** Remove the fuel system pressure relief valve cap.

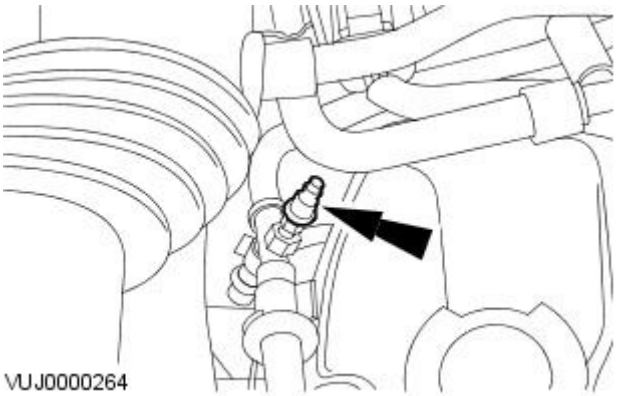


GETtheMANUALS.org

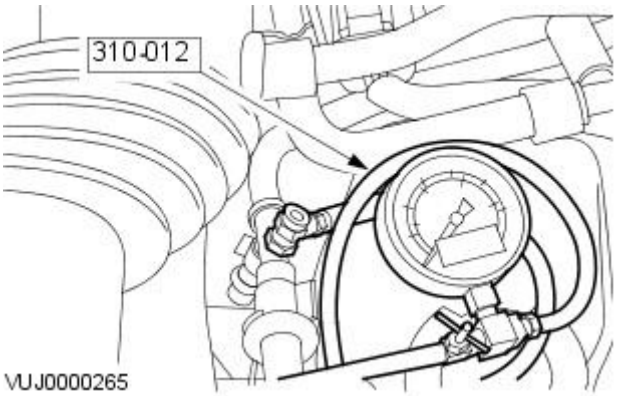


**3.** WARNING: Make sure the tap of the special tool is rotated fully clockwise before installing the special tool to the fuel system pressure relief valve. Failure to follow these instructions may result in personal injury.

Install the special tool to the fuel system pressure relief valve.

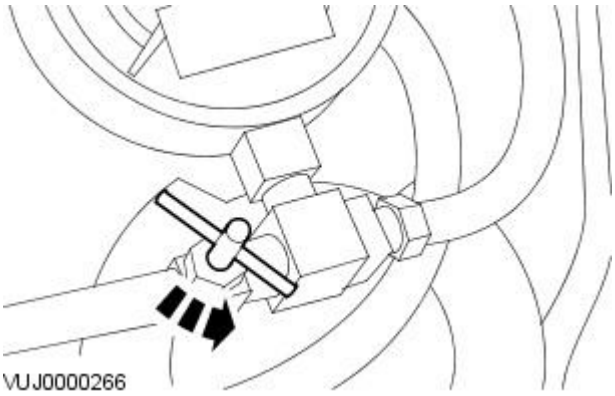


**4.** NOTE: When relieving the fuel system pressure, catch any displaced fuel in a suitable container.

Relieve the fuel system pressure.

- Rotate the tap of the special tool fully counterclockwise.

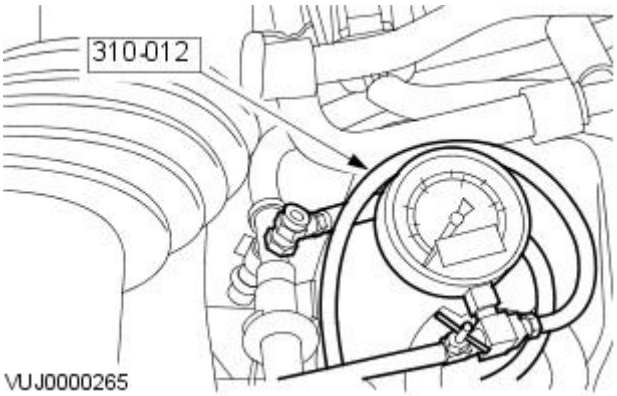


**5.** Remove the special tool from the fuel system pressure relief valve.

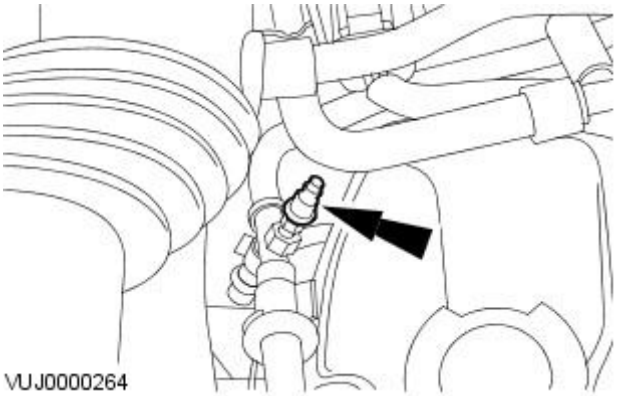


**6.** Install the fuel system pressure relief valve cap.

**7.** Connect the battery ground cable.

GETtheMANUALS.org

# Fuel System - General Information - Fuel Tank DrainingV8 4.2L Petrol/V8 S/C 4.2L Petrol/2.5L NA V6 - AJV6/3.0L NA V6 - AJ27, VIN Range: M45255->N52047

General Procedures

| Special Tool(s) | |
|---|---|
| 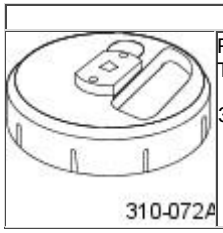 310-072A | Remover/Installer, Fuel Pump Module/Fuel Transfer Pump Locking Ring<br><br>310-072A |

**1.** WARNINGS:

Place the vehicle in a quarantined area and arrange "No Smoking/Petrol Fumes" signs about the vehicle.

Before any work is carried out on the fuel system, ground the vehicle to earth and maintain the ground connection until the work is complete.

Do not smoke or carry lighted tobacco or open flame of any type when working on or near any fuel related components. Highly flammable vapors are always present and may ignite. Failure to follow these instructions may result in personal injury.

The fuel system remains pressurized for a long time after the ignition is switched off. The fuel pressure must be relieved before attempting any repairs. Failure to follow these instructions may result in personal injury.

After carrying out repairs, the fuel system must be checked visually for leaks. Failure to follow these instructions may result in personal injury.

This procedure involves fuel handling. Be prepared for fuel spillage at all times and always observe fuel handling precautions. Failure to follow these instructions may result in personal injury.

If taken internally do not induce vomiting, seek immediate medical attention. Failure to follow these instructions may result in personal injury.

If fuel contacts the eyes, flush the eyes with cold water or eyewash solution and seek medical attention.

Wash hands thoroughly after handling, as prolonged contact may cause irritation. Should irritation develop, seek medical attention.

Release the pressure in the fuel system.
For additional information, refer to Fuel System Pressure Release in this section.

**2.** Open the fuel tank filler pipe flap.

**3.** Disconnect the battery ground cable.

**4.** Detach the fuel tank filler pipe cap.

**5.** Remove the rear seat cushion.
For additional information, refer to Section 501-10 Seating.

**6.** Detach and reposition the door opening weatherstrip.

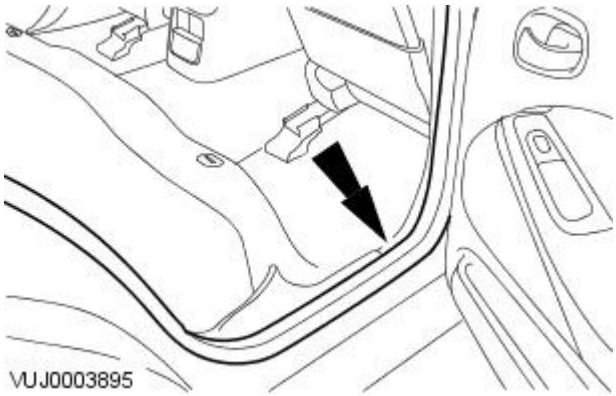


GETtheMANUALS.org

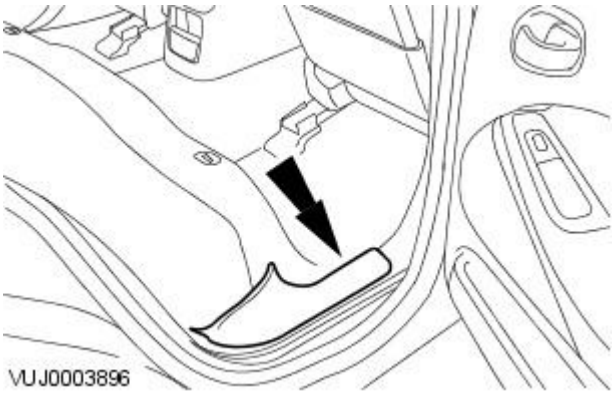


**7.** Remove the scuff plate trim panel.

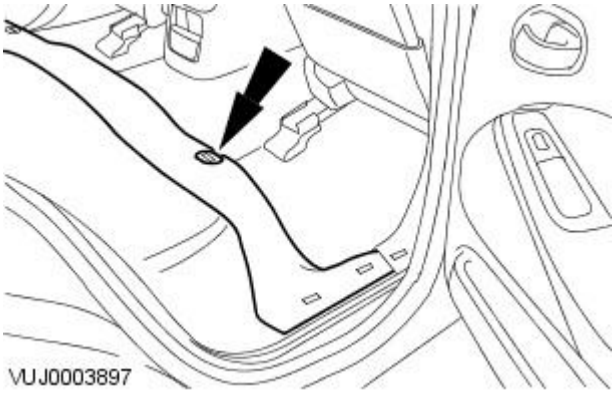


**8.** Detach and reposition the floor covering.

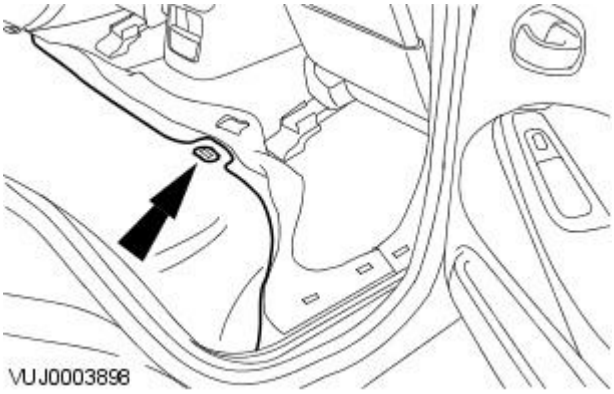


**9.** Detach and reposition the rear seat cushion insulation.

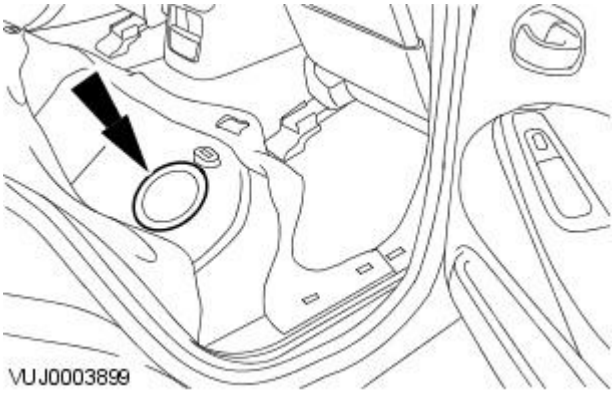


**10.** Remove the floor aperture cover.

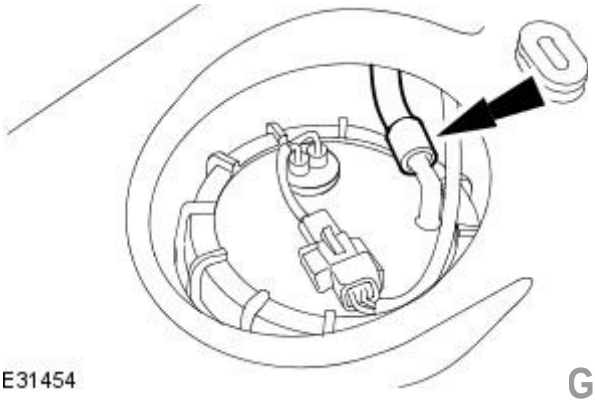


**11.** Disconnect the fuel pump module quick release coupling.

GETtheMANUALS.org

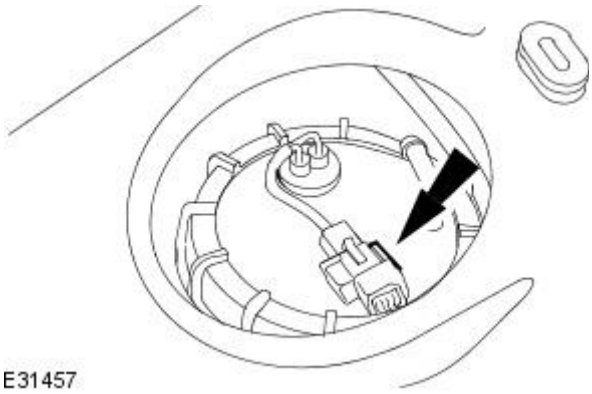


**12.** Detach the fuel pump module electrical connector from the retaining bracket.

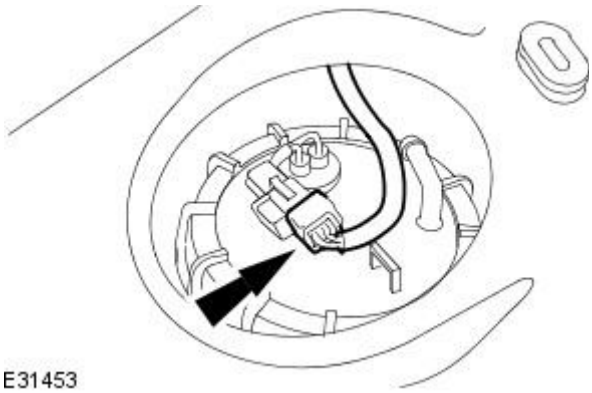


**13.** Disconnect the fuel pump module electrical connector.

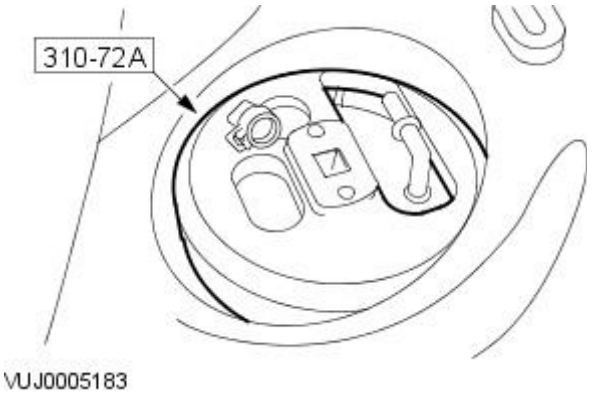


**14.** Using the special tool, remove the fuel pump module locking ring.

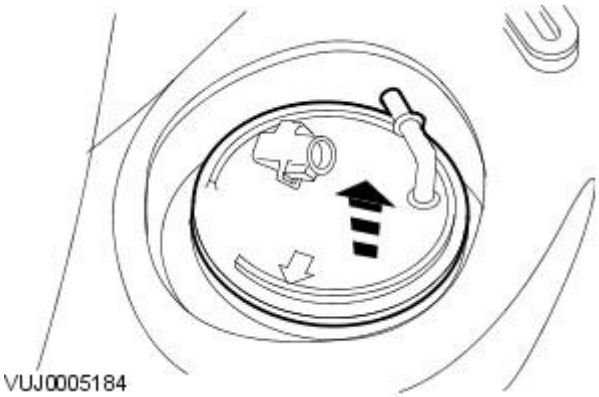


**15.** Detach and reposition the upper part of the fuel pump module.

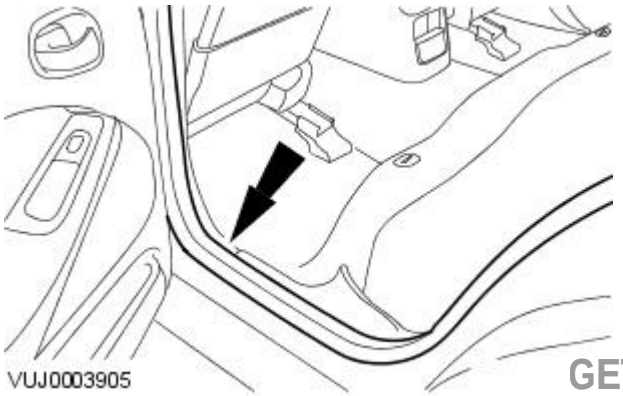


**16.** Detach and reposition the left-hand rear door opening weatherstrip.

GETtheMANUALS.org

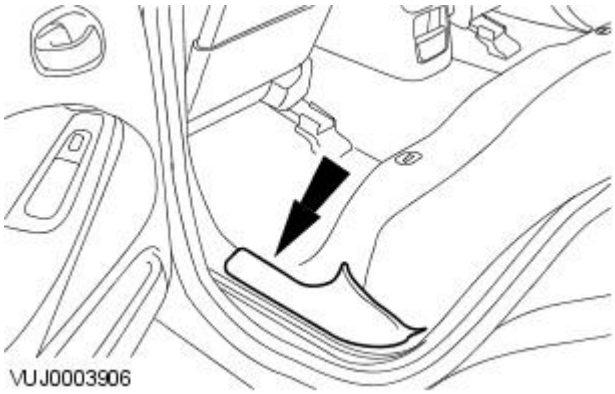


**17.** Remove the scuff plate trim panel.

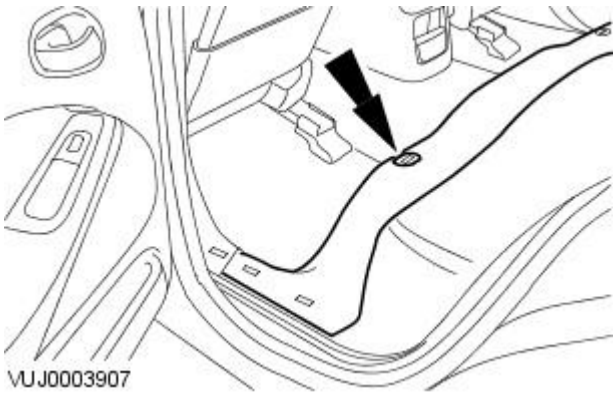


**18.** Detach and reposition the floor covering.

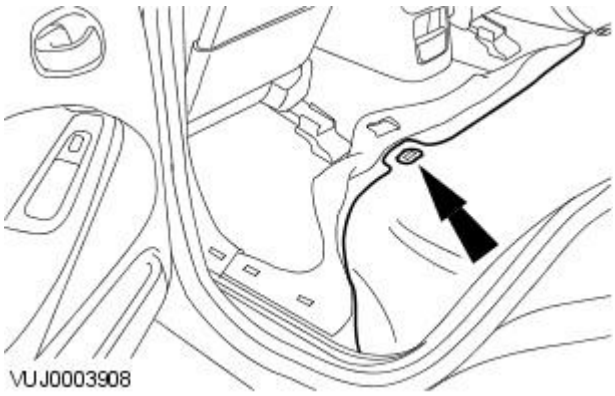


**19.** Detach and reposition the rear seat cushion insulation.

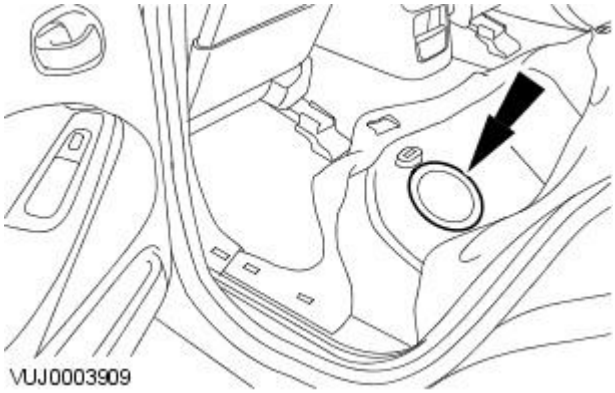


**20.** Remove the floor aperture cover.

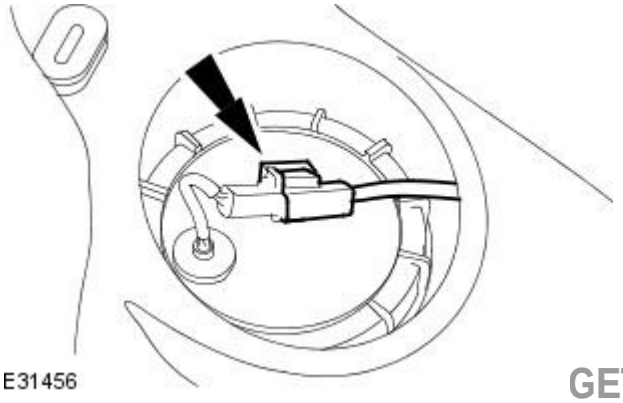


**21.** Detach the fuel transfer pump module electrical connector from the retaining bracket.

GETtheMANUALS.org

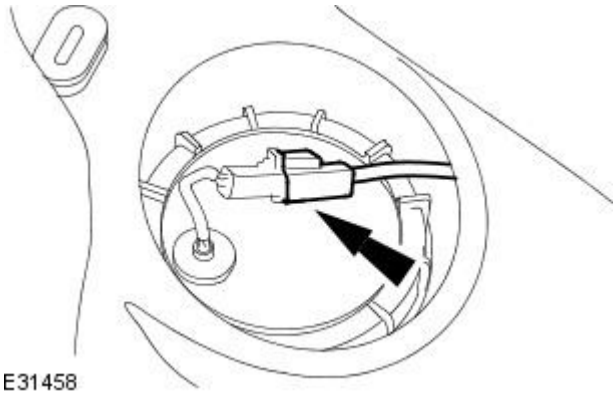


**22.** Disconnect the fuel transfer pump electrical connector.

1.

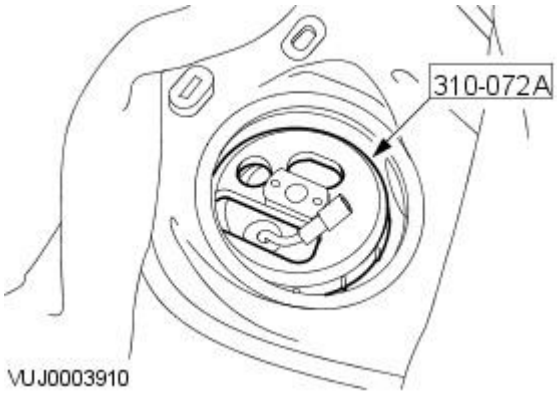


**23.** Using the special tool, remove the fuel transfer pump locking ring.

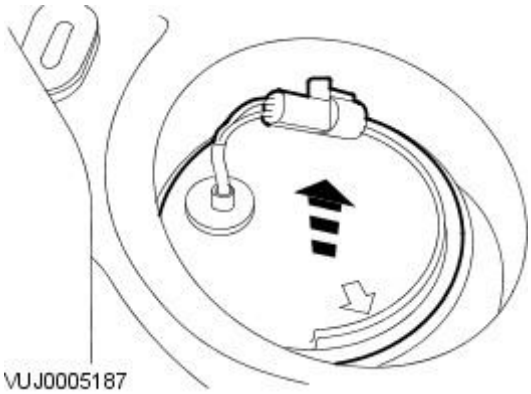


**24.** Detach and reposition the upper part of the fuel transfer pump.

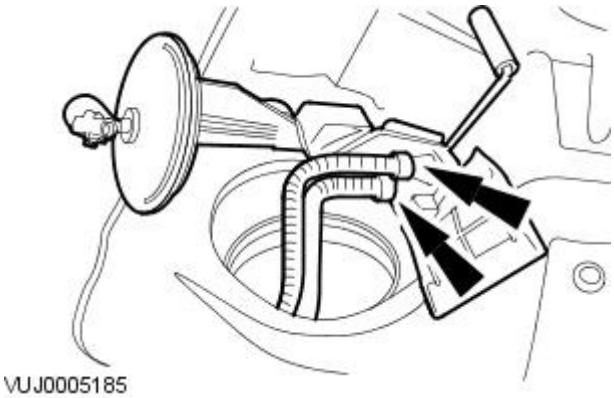


**25.** CAUTION: Make sure no damage occurs to the fuel level float.

Remove the fuel transfer pump.

- Disconnect the fuel cross over lines.

**26.** Remove and discard the fuel transfer pump O-ring seal.

**27.** Remove the fuel pump module.

- Remove and discard the fuel pump module gasket.

**28.** Using the fuel pump module hole in the fuel tank to gain access to the fuel, remove the fuel from the fuel tank using the fuel tank draining equipment. Follow the manufactures operating instructions.

**29.** Using the fuel transfer pump hole in the fuel tank to gain access to the fuel, remove the fuel from the fuel tank using the fuel tank draining equipment. Follow the manufactures operating instructions.

GETtheMANUALS.org

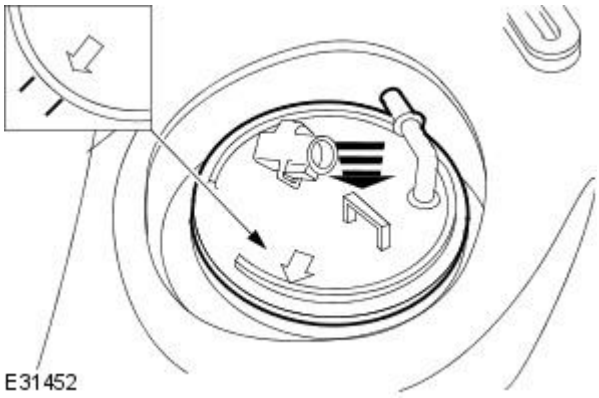


**30.** CAUTIONS:

On vehicles with supercharger make sure the arrow on the fuel pump module and the 'SC' marker on the fuel tank are aligned.

On vehicles without supercharger make sure the arrow on the fuel transfer module and the 'NA' marker on the fuel tank are aligned.

Make sure no damage occurs to the fuel level float.

• NOTE: Install a new gasket to the fuel pump module flange.

• NOTE: Take care not to stretch the gasket.

Install the fuel pump module.

1. Feed the fuel cross-over lines through the fuel pump module hole and across the front of the fuel tank saddle.

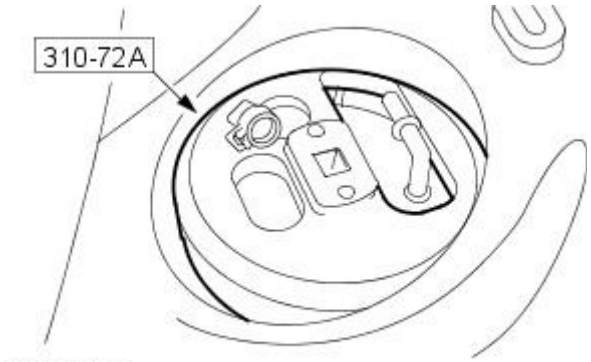


VUJ0005183

**31.** Using the special tool, install the fuel pump module locking ring.

- Tighten to 60 Nm.

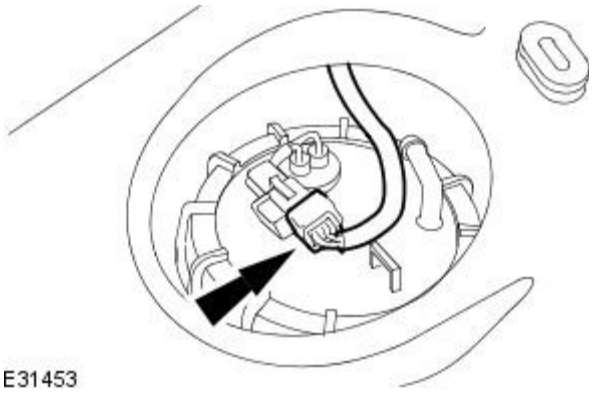


**32.** Connect the fuel pump module electrical connector.

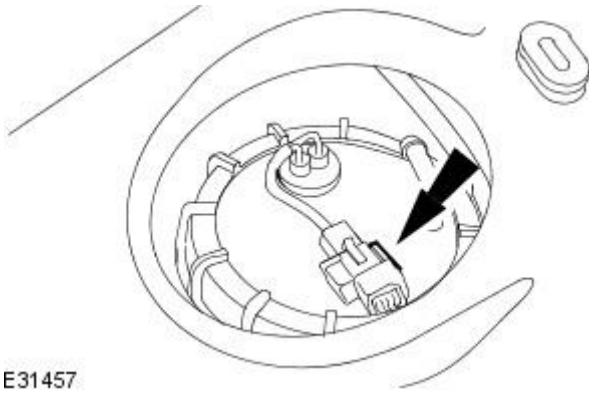


**33.** Attach the fuel pump module electrical connector to the retaining bracket.

GETtheMANUALS.org

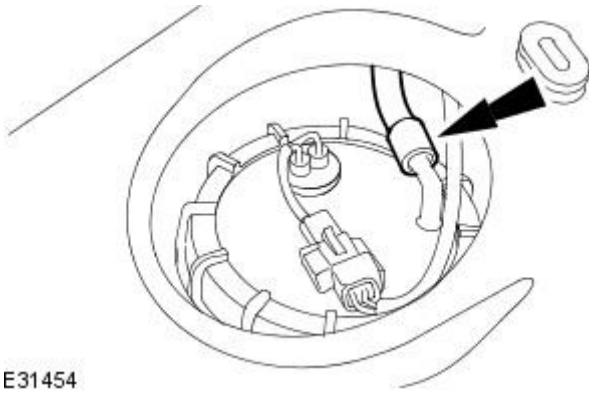


**34.** Connect the fuel pump module quick release coupling.

- Make sure the quick release coupling has latched onto the fuel pump module fuel pipe by pulling the pipe after the connection has been made.

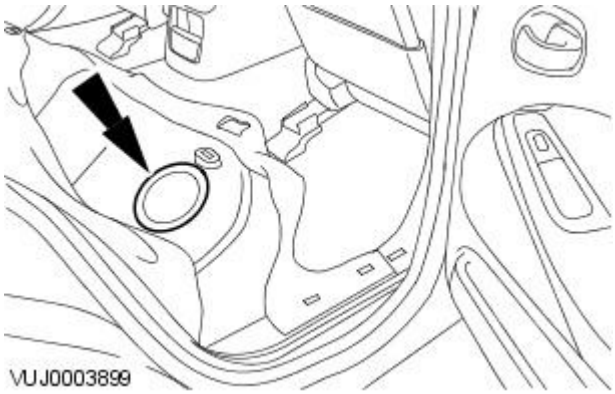


**35.** Install the floor aperture cover.

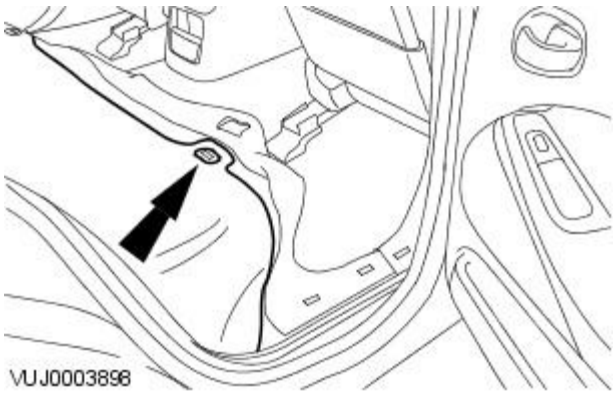


**36.** Attach the rear seat cushion insulation.

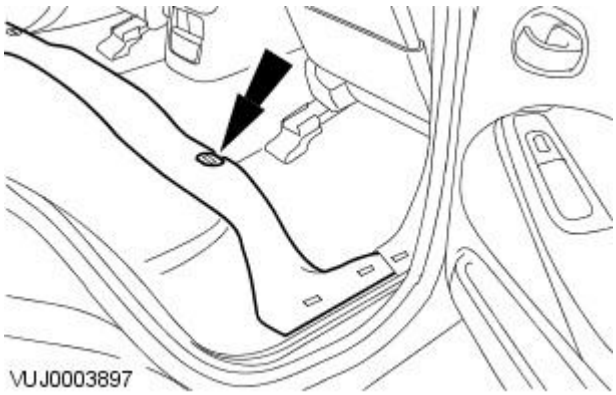


**37.** Attach the floor covering.

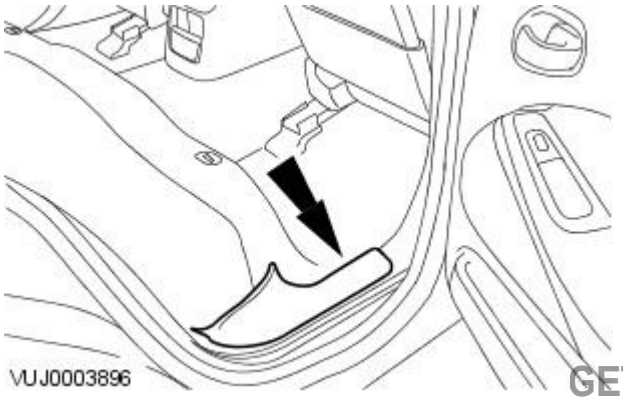


**38.** Install the scuff plate trim panel.

GETtheMANUALS.org

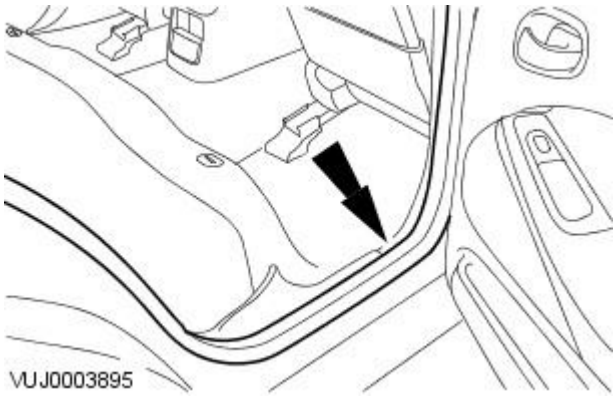


**39.** Attach the door opening weatherstrip.

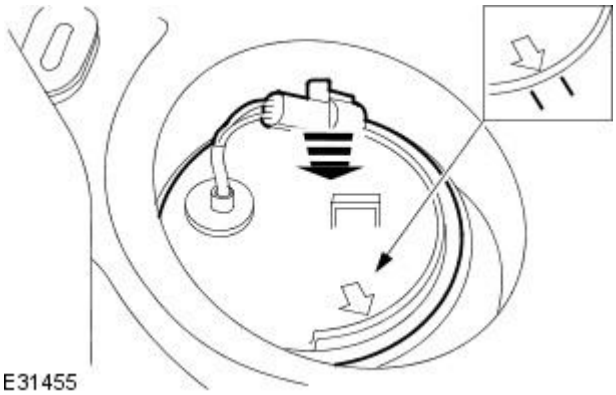


**40.** CAUTIONS:

Vehicles with supercharger - make sure the arrow on the left-hand fuel pump module lines up with the 'SC' marker on the fuel tank.

Vehicles without supercharger - make sure the arrow on the fuel transfer pump lines up with the 'NA' marker on the fuel tank.

Make sure no damage occurs to the fuel level float.

- NOTE: Install a new gasket to the fuel transfer pump flange.
- NOTE: Take care not to stretch the gasket.

Install the fuel transfer pump.

**41.** Using the special tool, install the fuel transfer pump locking ring.

- Tighten to 60 Nm.

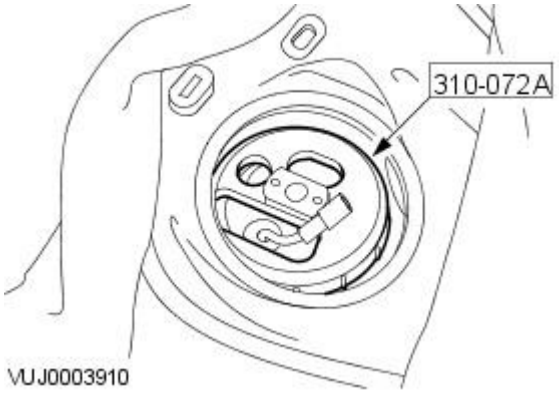


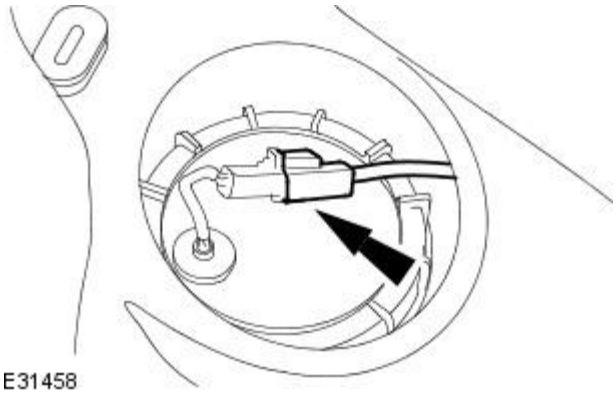


**42.** Connect the fuel transfer pump electrical connector.

1.

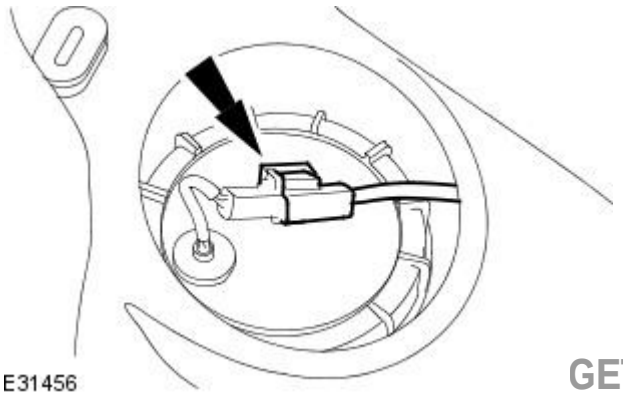


**43.** Attach the fuel transfer pump module electrical connector to the retaining bracket.

GETtheMANUALS.org

**44.** Install the floor aperture cover.

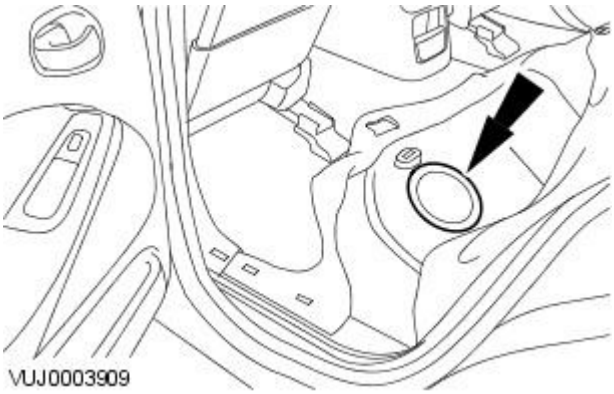


**45.** Attach the rear seat cushion insulation.

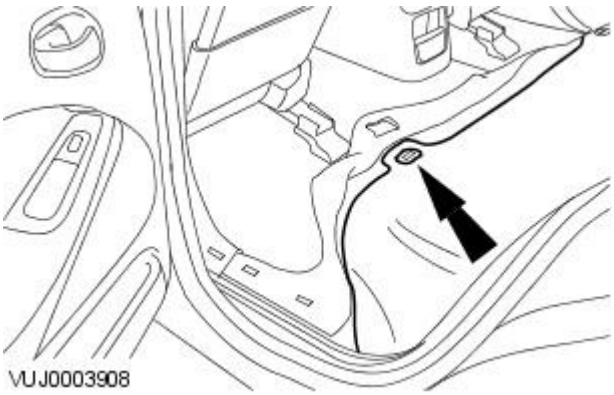


**46.** Attach the floor covering.

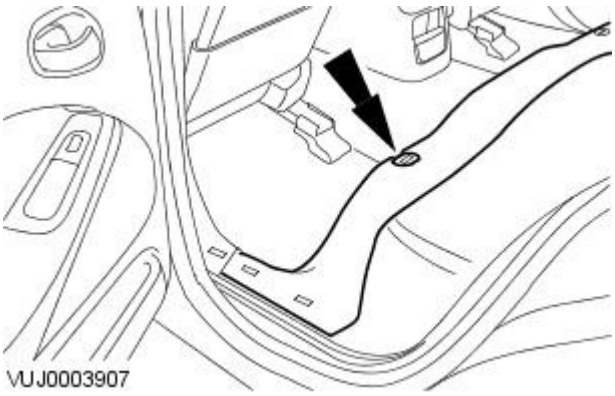


**47.** Install the scuff plate trim panel.

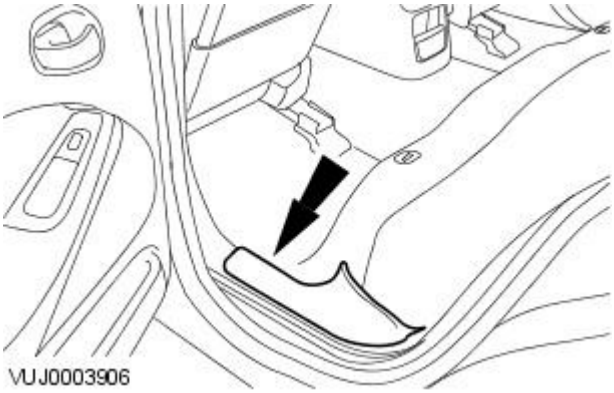


**48.** Attach the door opening weatherstrip.

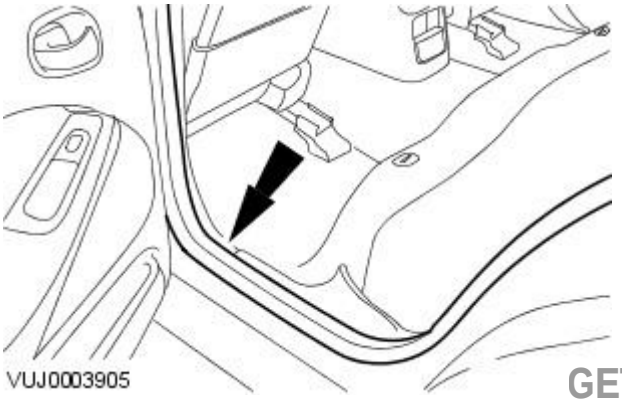


GETtheMANUALS.org

**49.** Install the rear seat cushion.
For additional information, refer to Section 501-10 Seating.

**50.** Attach the fuel tank filler pipe cap.

**51.** Connect the battery ground cable.

**52.** Close the fuel tank filler pipe flap.

GETtheMANUALS.org

# Fuel System - General Information - Fuel Tank Draining2.7L V6 - TdV6, VIN Range: M45255->N52047

General Procedures

| Special Tool(s) | |
|---|---|
| 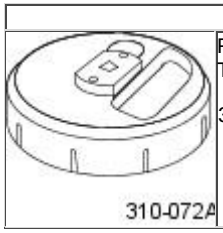  | Remover/Installer, Fuel Pump Module/Fuel Transfer Pump Locking Ring<br><br>310-072A |

**1.** WARNINGS:

Place the vehicle in a quarantined area and arrange "No Smoking/Fuel Fumes" signs about the vehicle.

Before any work is carried out on the fuel system, ground the vehicle to earth and maintain the ground connection until the work is complete.

Do not smoke or carry lighted tobacco or open flame of any type when working on or near any fuel related components. Highly flammable vapors are always present and may ignite. Failure to follow these instructions may result in personal injury.

After carrying out repairs, the fuel system must be checked visually for leaks. Failure to follow these instructions may result in personal injury.

This procedure involves fuel handling. Be prepared for fuel spillage at all times and always observe fuel handling precautions. Failure to follow these instructions may result in personal injury.

If taken internally do not induce vomiting, seek immediate medical attention. Failure to follow these instructions may result in personal injury.

If fuel contacts the eyes, flush the eyes with cold water or eyewash solution and seek medical attention.

Wash hands thoroughly after handling, as prolonged contact may cause irritation. Should irritation develop, seek medical attention.

Remove the fuel level sensor.
For additional information, refer to: Fuel Transfer Unit - 2.7L V6 - TdV6 (310-01 Fuel Tank and Lines, Removal and Installation).

**2.** Detach and reposition the door opening weatherstrip.

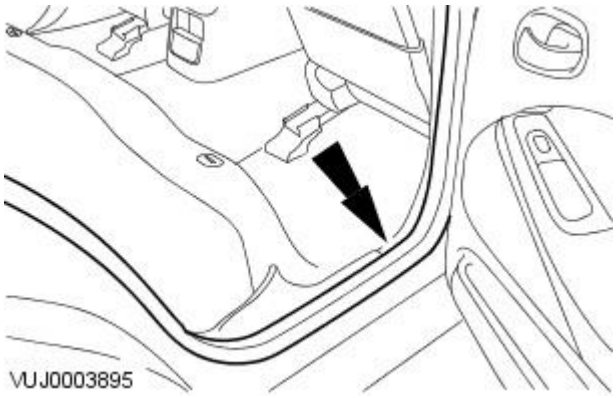


GETtheMANUALS.org

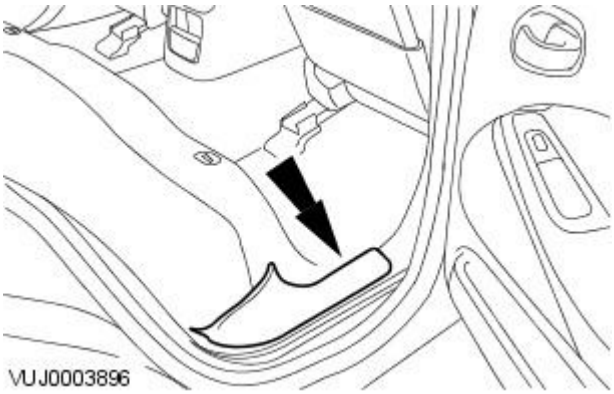


**3.** Remove the scuff plate trim panel.

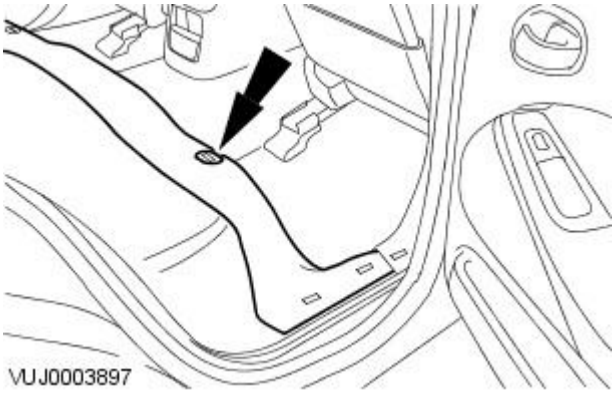


**4.** Detach and reposition the floor covering.

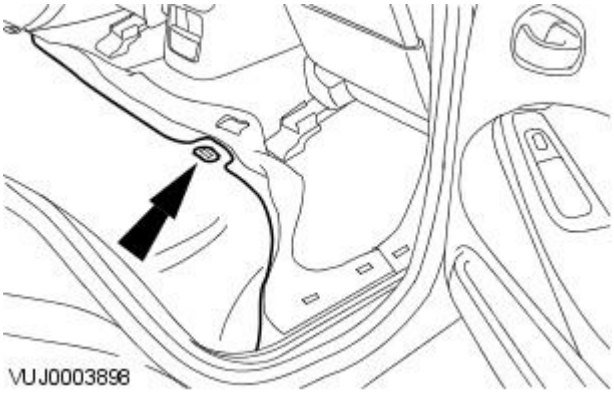


**5.** Detach and reposition the rear seat cushion insulation.

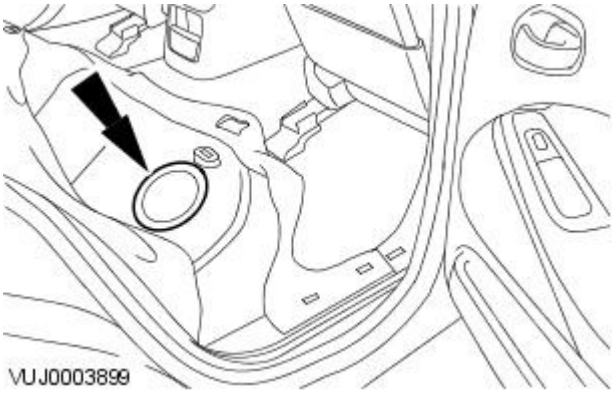


**6.** Remove the floor aperture cover.

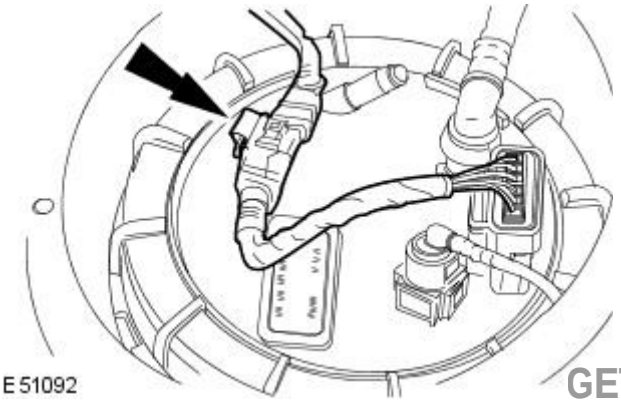


**7.** Detach the fuel pump module electrical connector from the retaining bracket.

GETtheMANUALS.org

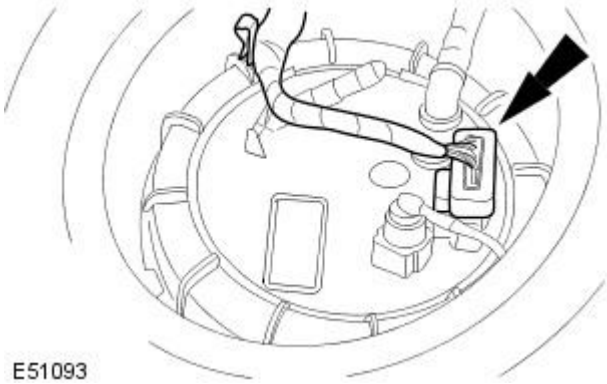


**8.** Disconnect the fuel pump module electrical connector.

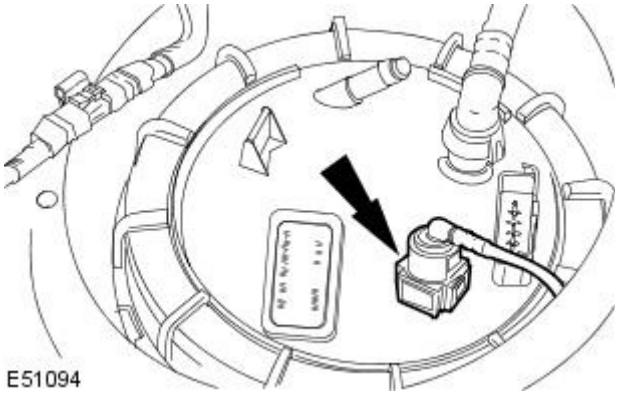


**9.** Disconnect the auxiliary heater fuel supply line quick release coupling.
For additional information, refer to: Quick Release Coupling - Push Connect (310-00 Fuel System - General Information, General Procedures).

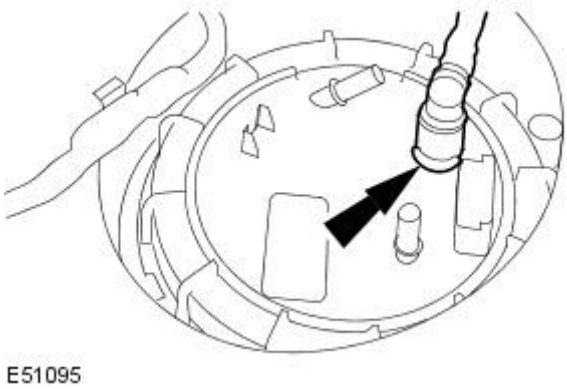


**10.** Disconnect the fuel supply line quick release coupling.
For additional information, refer to: Quick Release Coupling - Push Connect (310-00 Fuel System - General Information, General Procedures).

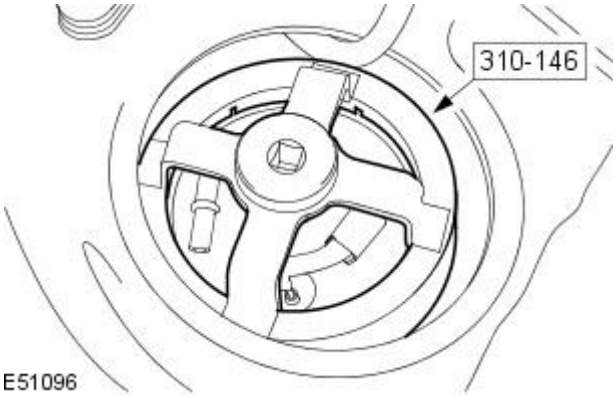


**11.** CAUTION: Make sure no damage occurs to the fuel pump module when removing the locking ring.

Using the special tool, remove the fuel pump module locking ring.

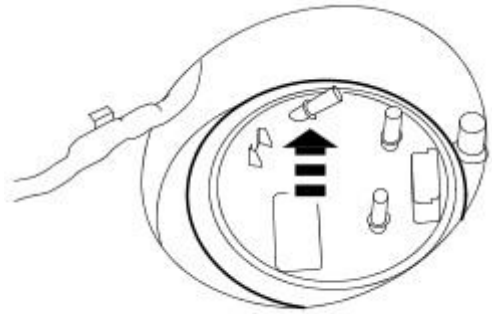


**12.** Detach and reposition the upper part of the fuel pump module.

GETtheMANUALS.org

13. Using the fuel pump module hole in the fuel tank to gain access to the fuel, remove the fuel from the fuel tank using the fuel tank draining equipment. Follow the manufacturers operating instructions.

14. Using the fuel transfer pump hole in the fuel tank to gain access to the fuel, remove the fuel from the fuel tank using the fuel tank draining equipment. Follow the manufacturers operating instructions.

15. NOTE: Install a new gasket to the fuel pump module flange.

• NOTE: Take care not to stretch the gasket.

Reposition the upper part of the fuel pump module.

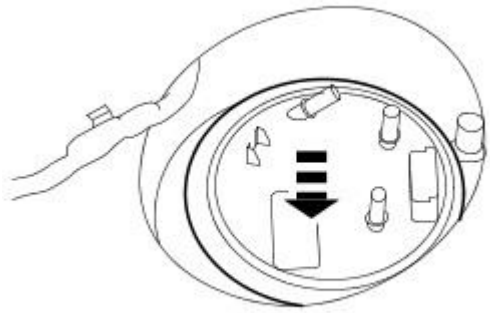

E51102

16. Align the arrow on the fuel pump module with the alignment marks on the fuel tank.

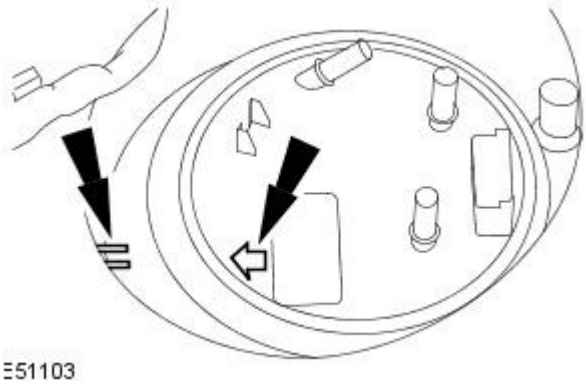

E51103

17. CAUTION: Make sure no damage occurs to the fuel pump module when installing the locking ring.

Using the special tool, install the fuel pump module locking ring.

- Tighten to 60 Nm.

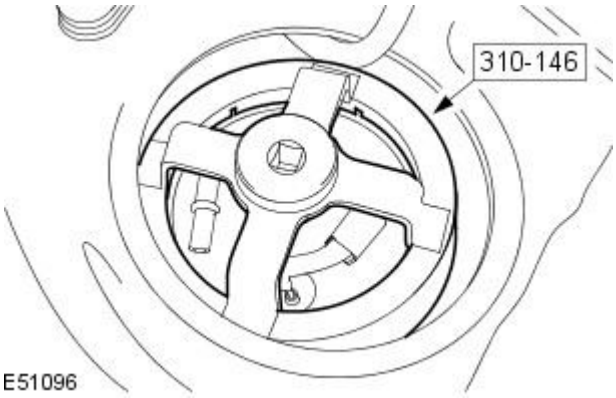


E51096

18. Connect the fuel pump module quick release coupling.
For additional information, refer to: Quick Release Coupling - Push Connect (310-00 Fuel System - General Information, General Procedures).

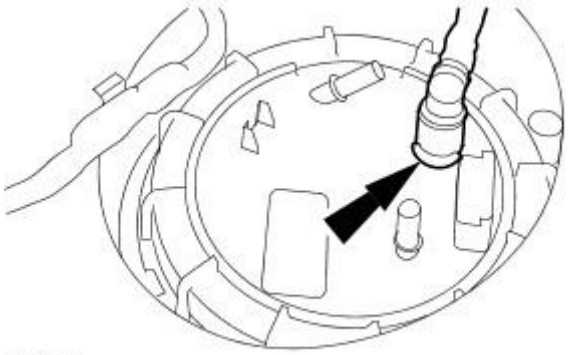

E51095

GETtheMANUALS.org

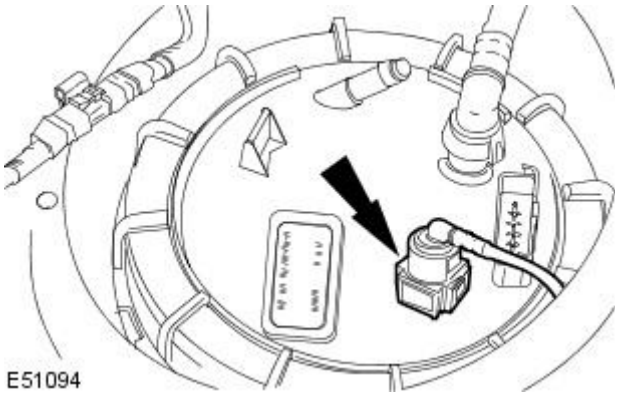


**19.** Connect the auxiliary heater fuel supply line quick release coupling. For additional information, refer to: Quick Release Coupling - Push Connect (310-00 Fuel System - General Information, General Procedures).

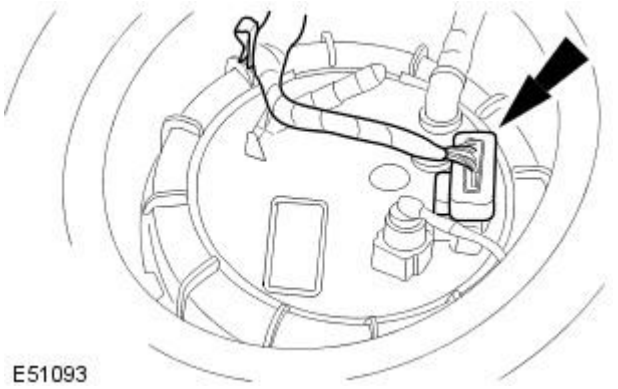


**20.** Connect the fuel pump module electrical connector.

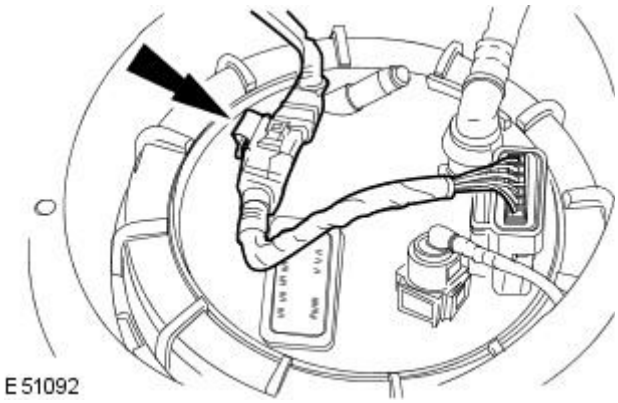


**21.** Attach the fuel pump module electrical connector to the retaining bracket.

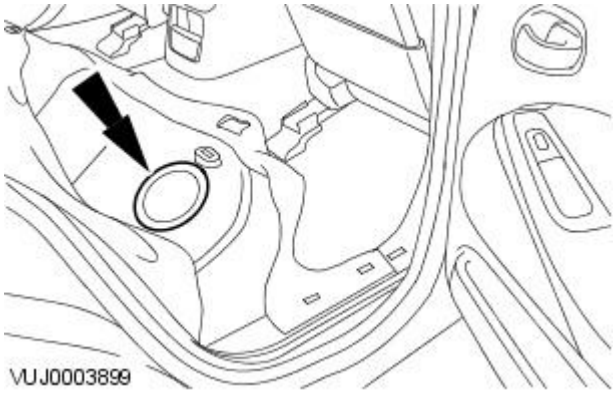


**22.** Install the floor aperture cover.

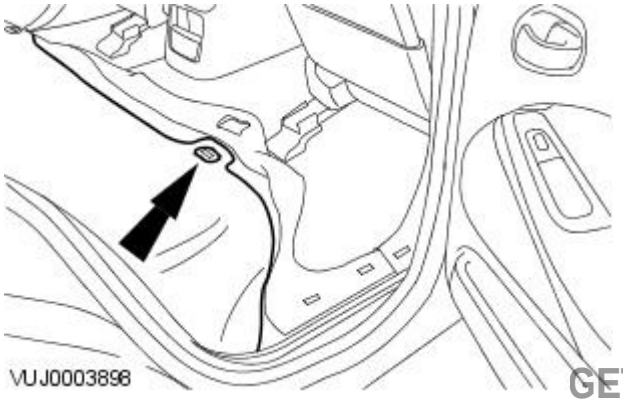


**23.** Attach the rear seat cushion insulation.

GETtheMANUALS.org

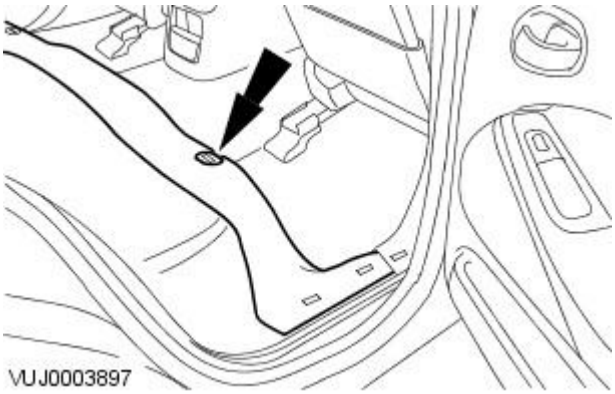


**24.** Attach the floor covering.

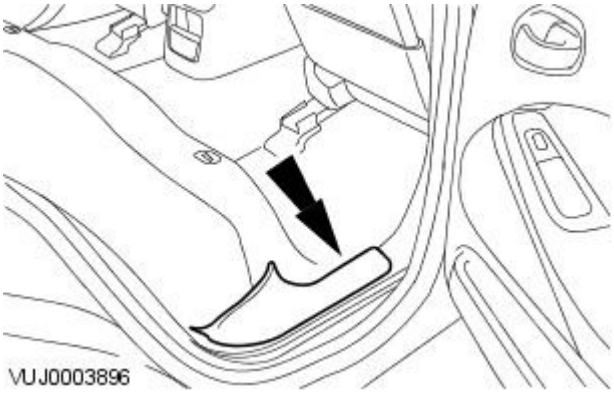


**25.** Install the scuff plate trim panel.

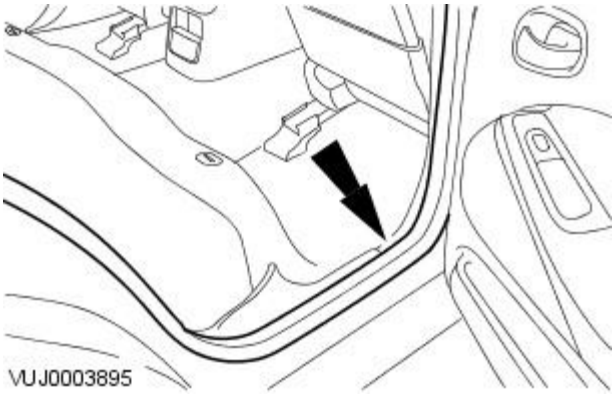


**26.** Attach the door opening weatherstrip.

**27.** Install the fuel level sensor.
For additional information, refer to: Fuel Transfer Unit - 2.7L V6 - TdV6 (310-01 Fuel Tank and Lines, Removal and Installation).

GETtheMANUALS.org

# Fuel System - General Information - Fuel Tank DrainingVIN Range: N52048->N99999

General Procedures

| Special Tool(s) | |
|---|---|
| 310-146<br> <br>E67127 | Fuel tank drain adaptor<br><br>310-154 |

• WARNINGS:

Place the vehicle in a quarantined area and arrange "No Smoking/Petrol Fumes" signs about the vehicle.

Before any work is carried out on the fuel system, ground the vehicle to earth and maintain the ground connection until the work is complete.

Do not smoke or carry lighted tobacco or open flame of any type when working on or near any fuel related components. Highly flammable vapors are always present and may ignite. Failure to follow these instructions may result in personal injury.

The fuel system remains pressurized for a long time after the ignition is switched off. The fuel pressure must be relieved before attempting any repairs. Failure to follow these instructions may result in personal injury.

After carrying out repairs, the fuel system must be checked visually for leaks. Failure to follow these instructions may result in personal injury.

This procedure involves fuel handling. Be prepared for fuel spillage at all times and always observe fuel handling precautions. Failure to follow these instructions may result in personal injury.

If taken internally do not induce vomiting, seek immediate medical attention. Failure to follow these instructions may result in personal injury.

If fuel contacts the eyes, flush the eyes with cold water or eyewash solution and seek medical attention.

Wash hands thoroughly after handling, as prolonged contact may cause irritation. Should irritation develop, seek medical attention.

1. Release the pressure in the fuel system.
   For additional information, refer to: Fuel System Pressure Release (310-00 Fuel System - General Information, General Procedures).
2. Remove the rear seat cushion.
   For additional information, refer to: Rear Seat Cushion (501-10 Seating, Removal and Installation).
3. Detach and reposition the door opening weatherstrip.

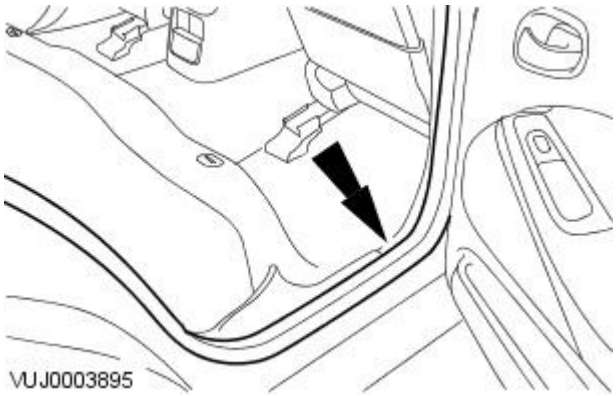


GETtheMANUALS.org

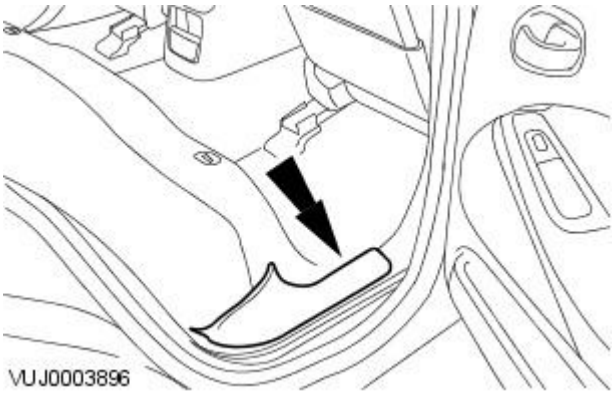


**4.** Remove the scuff plate trim panel.

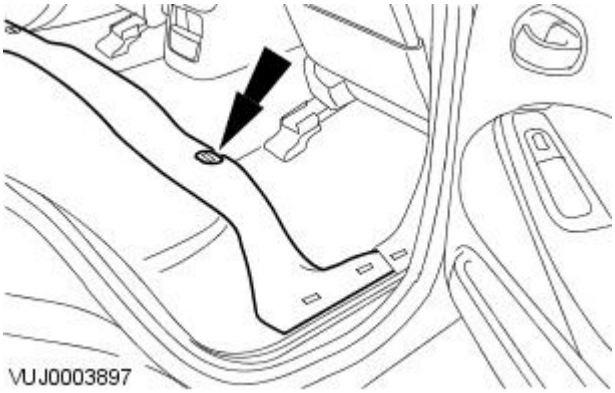


**5.** Detach and reposition the floor covering.

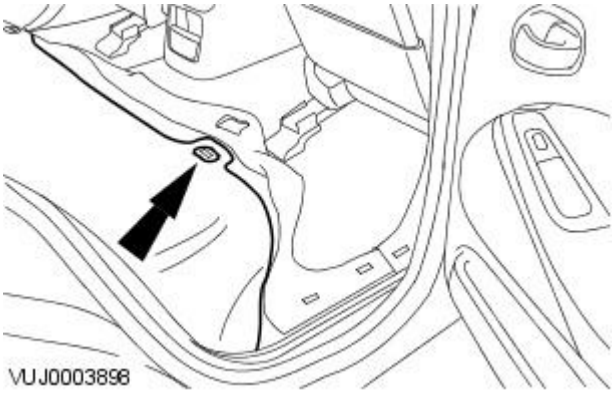


**6.** Detach and reposition the rear seat cushion insulation.

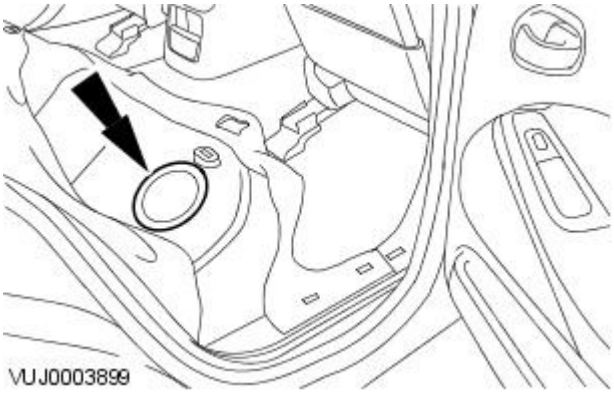


**7.** Remove the floor aperture cover.

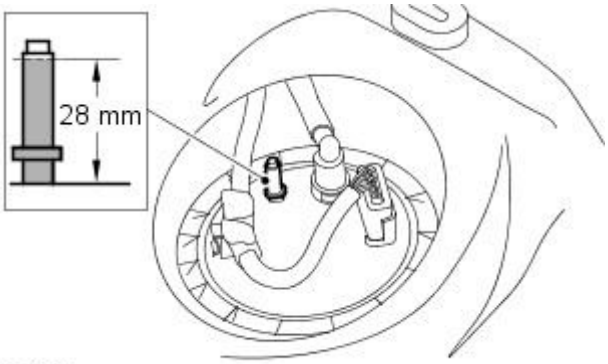


**8.** CAUTION: The correct measurement must be used to remove the fuel tank drain port top. Failure to follow this instruction may result in damage to the vehicle.

• NOTE: The fuel tank drain port is marked with **DRAIN**.

• NOTE: Vehicles without Diesel engine shown, vehicles with Diesel engine similar.

Using a suitable tool, remove the top of the fuel tank drain port.

GETtheMANUALS.org

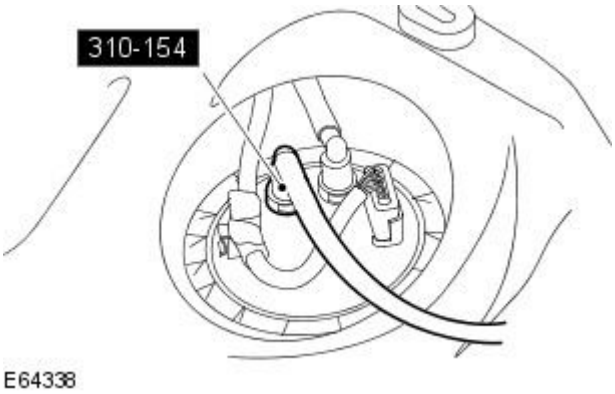


**9.** NOTE: Vehicles without Diesel engine shown, vehicles with Diesel engine similar.

Using the special tool, drain the right-hand side of the fuel tank.

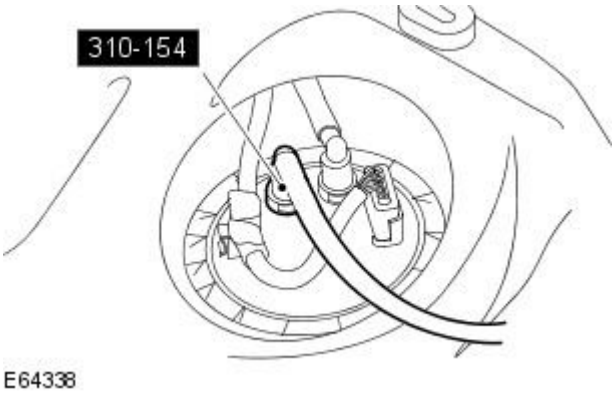


**10.** NOTE: Vehicles without Diesel engine shown, vehicles with Diesel engine similar.

Remove the special tool.

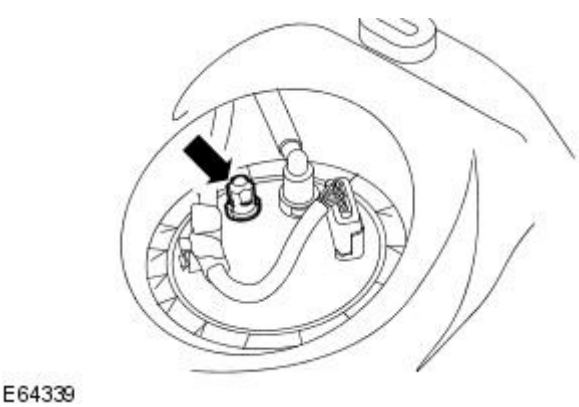


**11.** CAUTION: Make sure the new fuel tank drain port sealing cap is correctly installed. Failure to follow this instruction may result in damage to the vehicle.

• NOTE: Vehicles without Diesel engine shown, vehicles with Diesel engine similar.

Install a new fuel tank drain port sealing cap.

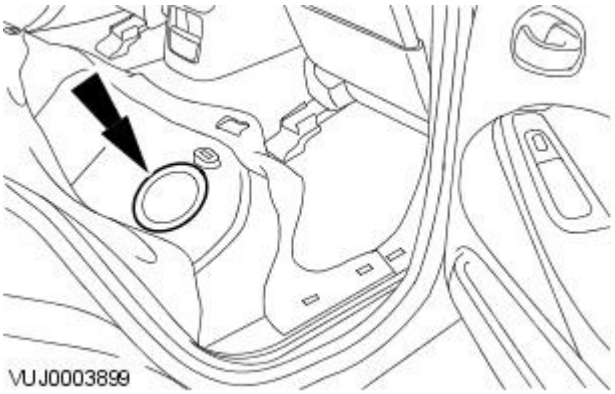


**12.** Install the floor aperture cover.

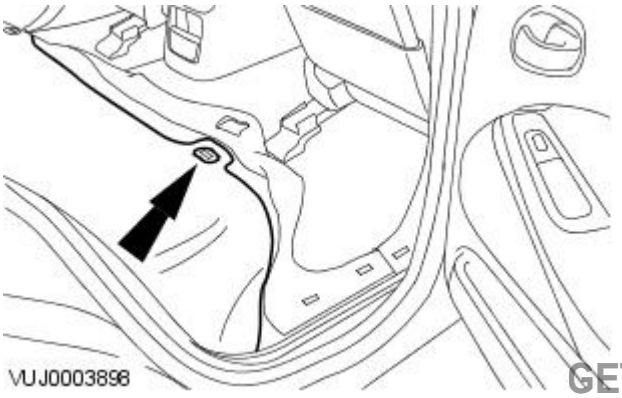


**13.** Attach the rear seat cushion insulation.

GETtheMANUALS.org

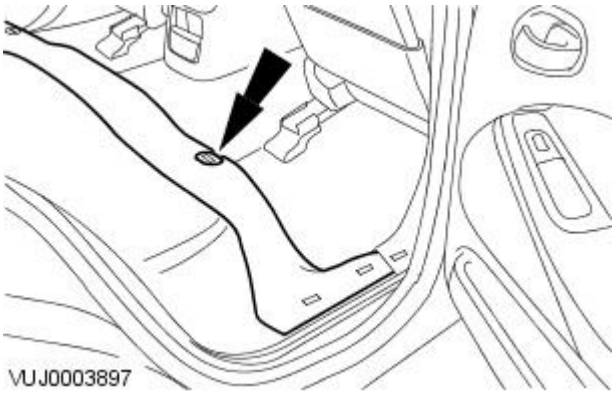


**14.** Attach the floor covering.

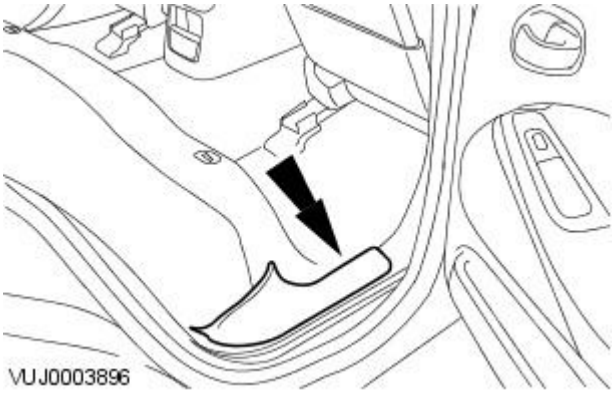


**15.** Install the scuff plate trim panel.

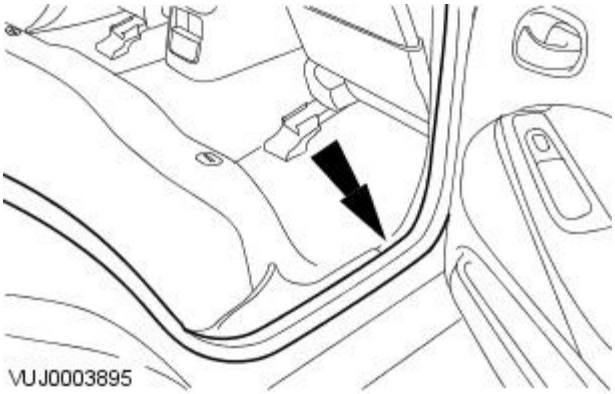


**16.** Attach the door opening weatherstrip.

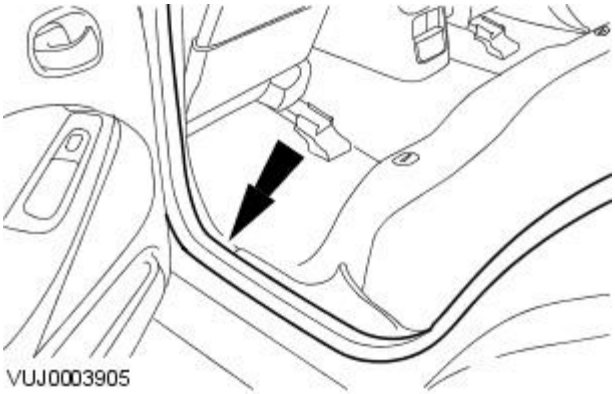


**17.** Detach and reposition the door opening weatherstrip.

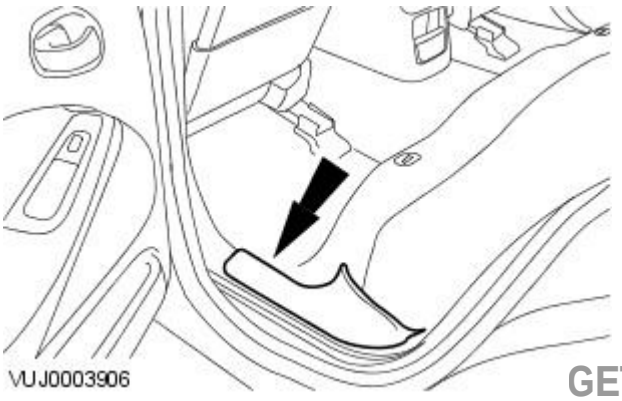


**18.** Remove the scuff plate trim panel.

GETtheMANUALS.org

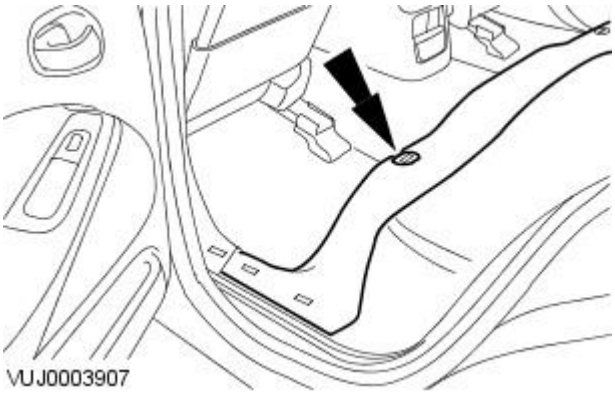


**19.** Detach and reposition the floor covering.

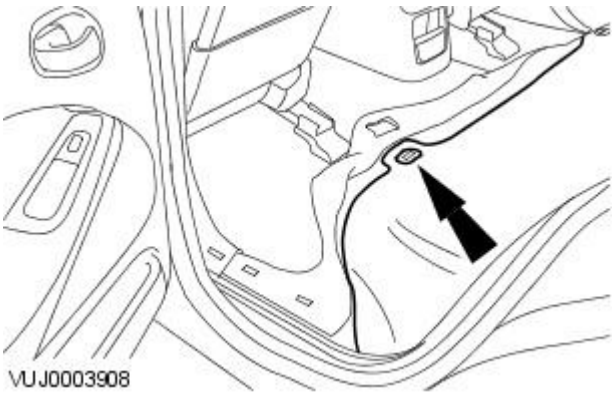


**20.** Detach and reposition the rear seat cushion insulation.

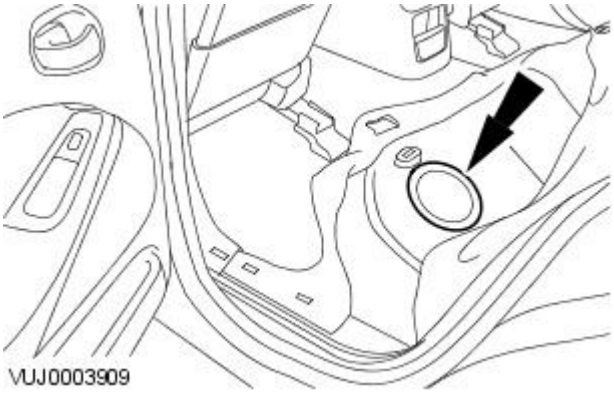


**21.** Remove the floor aperture cover.

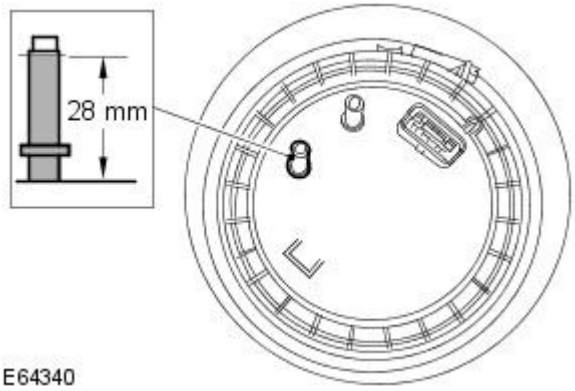


**22.** CAUTION: The correct measurement must be used to remove the fuel tank drain port top. Failure to follow this instruction may result in damage to the vehicle.

• NOTE: The fuel tank drain port is marked with **DRAIN**.

• NOTE: Vehicles without Diesel engine shown, vehicles with Diesel engine similar.

Using a suitable tool, remove the top of the fuel tank drain port.

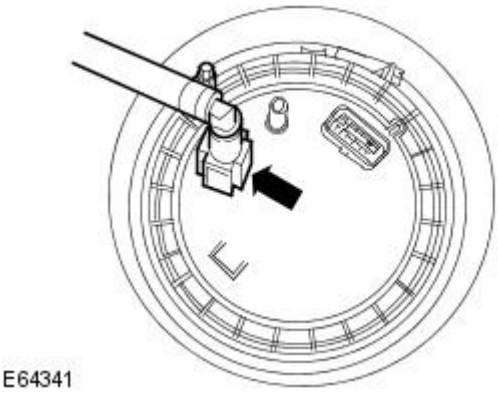


**23.** NOTE: Vehicles without Diesel engine shown, vehicles with Diesel engine similar.

Using the special tool, drain the left-hand side of the fuel tank.

GETtheMANUALS.org

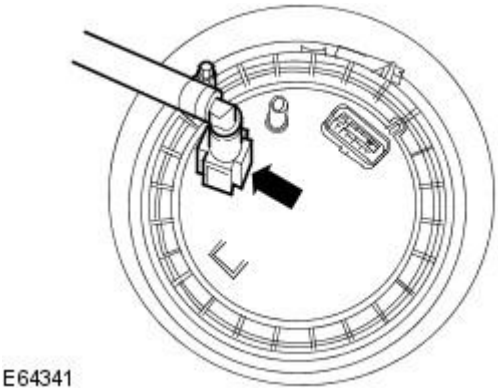


**24.** NOTE: Vehicles without Diesel engine shown, vehicles with Diesel engine similar.

Remove the special tool.

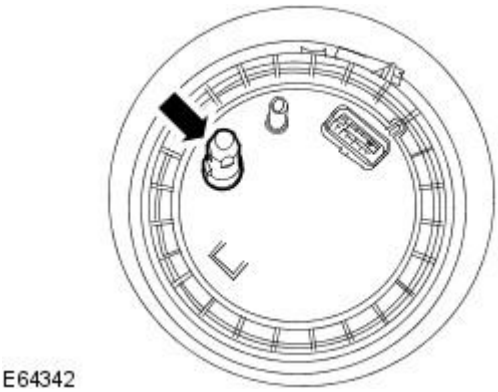


**25.** CAUTION: Make sure the new fuel tank drain port sealing cap is correctly installed. Failure to follow this instruction may result in damage to the vehicle.

• NOTE: Vehicles without Diesel engine shown, vehicles with Diesel engine similar.

Install a new fuel tank drain port sealing cap.

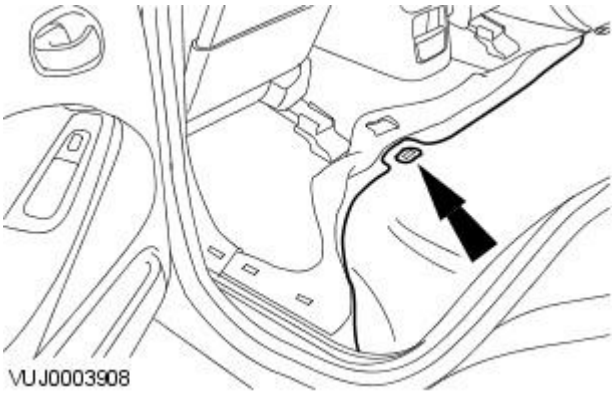


**26.** Attach the rear seat cushion insulation.

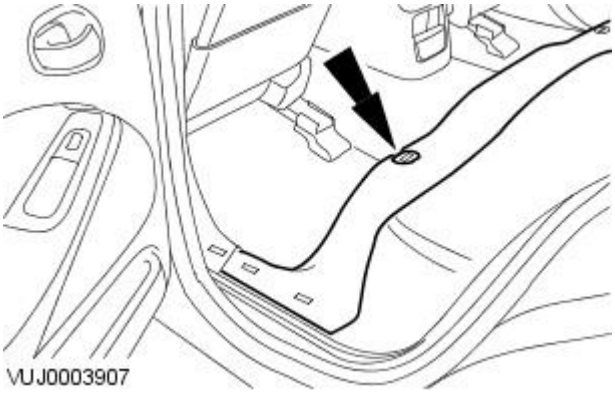


**27.** Attach the floor covering.

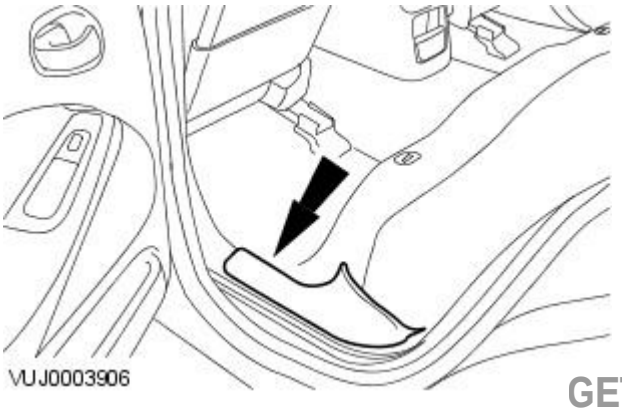


**28.** Install the scuff plate trim panel.

GETtheMANUALS.org

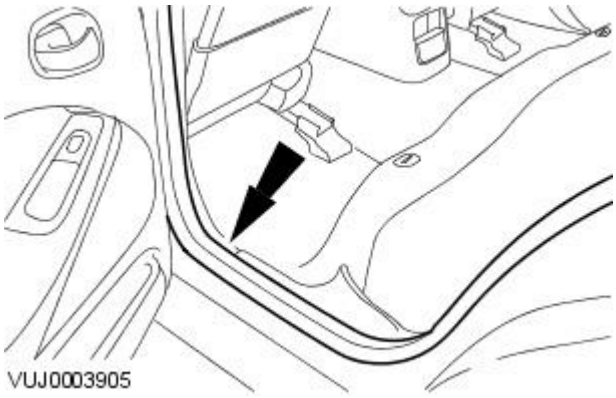


**29.** Attach the door opening weatherstrip.

**30.** Install the rear seat cushion.
For additional information, refer to: Rear Seat Cushion (501-10 Seating, Removal and Installation).

GETtheMANUALS.org

# Fuel System - General Information - High-Pressure Fuel System Bleeding

General Procedures

**General Equipment**

| |
|---|
| Pneumatic vacuum gun |

• WARNINGS:

Wait at least 30 seconds after the engine stops before commencing any repair to the high-pressure fuel injection system. Failure to follow this instruction may result in personal injury.

Place the vehicle in a well ventilated, quarantined, area and arrange "No Smoking/Fuel Fumes" signs about the vehicle.

Before any work is carried out on the fuel system, ground the vehicle to earth and maintain the ground connection until the work is complete.

Do not carry out any repairs to the fuel injection system with the engine running. The fuel pressure within the system can be as high as 1650 bar. Failure to follow this instruction may result in personal injury.

Do not smoke or carry lighted tobacco or open flame of any type when working on or near any fuel related components. Highly flammable vapors are always present and may ignite. Failure to follow these instructions may result in personal injury.

After carrying out repairs, the fuel system must be checked visually for leaks. Failure to follow these instructions may result in personal injury.

If taken internally do not induce vomiting, seek immediate medical attention. Failure to follow these instructions may result in personal injury.

If fuel contacts the eyes, flush the eyes with cold water or eyewash solution and seek medical attention.

Wash hands thoroughly after handling fuel, as prolonged contact may cause irritation. Should irritation develop, seek medical attention.

This procedure involves fuel handling. Be prepared for fuel spillage at all times and always observe fuel handling precautions. Failure to follow these instructions may result in personal injury.

• CAUTIONS:

Diesel fuel injection equipment is manufactured to very precise tolerances and fine clearances. It is therefore essential that absolute cleanliness is observed when working with these components. Always fit blanking plugs to any open orifices or lines.

Always carry out the cleaning process before carrying out any repairs to the fuel injection system components. Failure to follow these instructions may result in foreign matter ingress to the fuel injection system.

The low pressure fuel system bleeding procedure must be carried out before this procedure is carried out, or the engine is attempted to be started, following removal or replacement of any low pressure fuel system component. Failure to follow this instruction may result in damage to the fuel injection pump.
For additional information, refer to: Low-Pressure Fuel System Bleeding (310-00 Fuel System - General Information, General Procedures).

The engine must not be cranked using the starter motor for more than 30 seconds. The starter motor must be allowed to cool for at least 5 minutes after cranking for 30 seconds. Failure to follow these instructions will result in damage to the starter motor.

• NOTE: If a new fuel filter is to be installed, make sure the fuel filter is installed **AFTER** the high-pressure fuel system has been bled.

• NOTE: This procedure is necessary if the fuel injection pump, or the fuel line between the fuel filter and the fuel injection pump is removed, drained of fuel or replaced.

**1.** Bleed the low pressure fuel system.
For additional information, refer to: Low-Pressure Fuel System Bleeding (310-00 Fuel System - General Information, General Procedures).

GETtheMANUALS.org

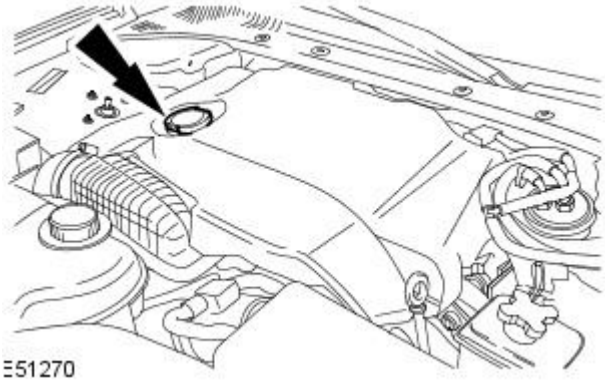


**2.** Remove the oil filler cap.

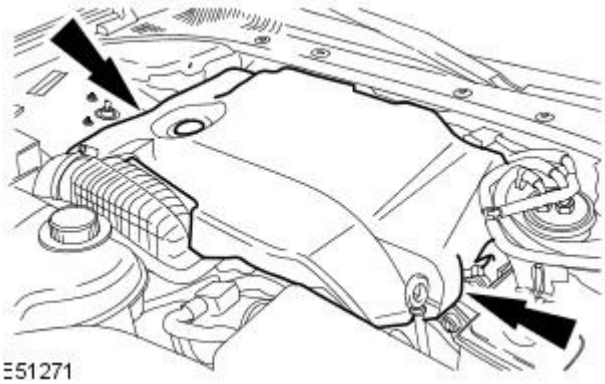


**3.** Remove the engine cover.

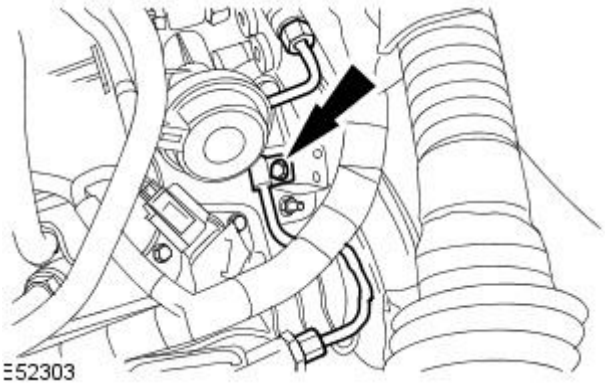


**4.** Detach the high-pressure fuel supply line clamp.

**5.** Clean around the high-pressure fuel supply lines, the fuel injection diverter rail and the fuel injection supply manifolds.
For additional information, refer to: Fuel Injection Component Cleaning (303-04C Fuel Charging and Controls - 2.7L V6 - TdV6, General Procedures).

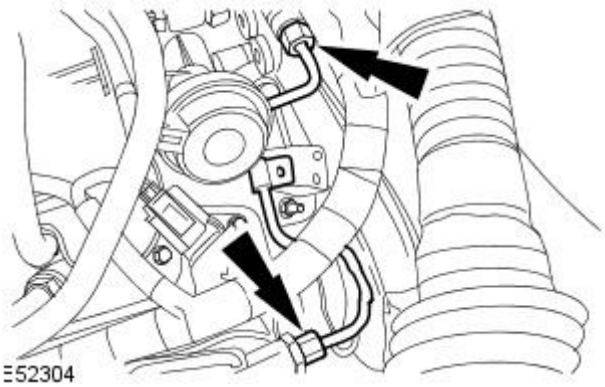


**6.** CAUTIONS:

Make sure that the high-pressure fuel supply line remains in contact with the fuel injection supply manifold and fuel injection diverter rail until both unions have been detached and cleaned. Failure to follow this instruction may result in foreign matter ingress to the fuel injection system.

Make sure the tool used to loosen the high-pressure fuel supply line unions is used at the top of the unions as this is where there is most material. Failure to follow this instruction may result in damage to the unions.

Loosen the high-pressure fuel supply lines.

**7.** Using the pneumatic vacuum gun, vacuum foreign material from the high-pressure fuel supply lines, the fuel injection diverter rail and the fuel injection supply manifolds.

GETtheMANUALS.org

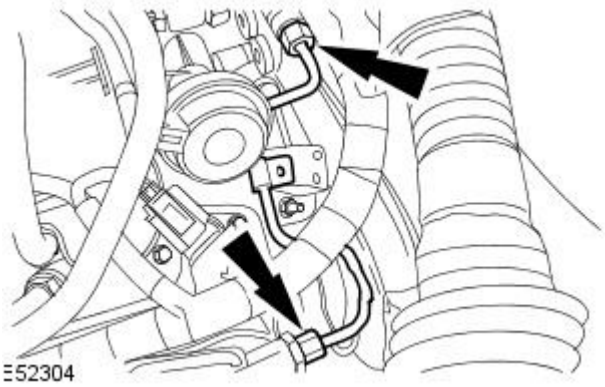


**8.** Remove and discard the high-pressure fuel supply line.

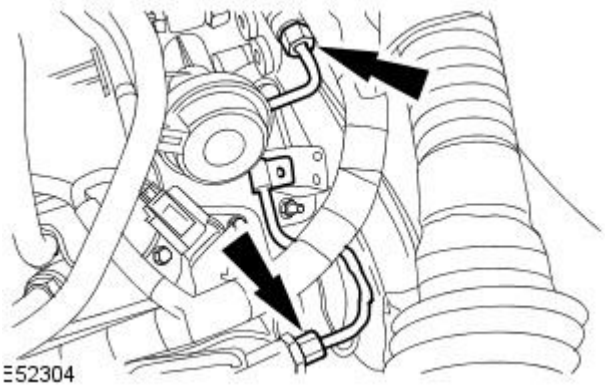


**9.** Install a new high-pressure fuel supply line, but do not fully tighten the unions at this stage.

**10.** Position suitable lint free material under the left-hand high-pressure fuel line unions to catch escaping fuel.

**11.** Turn the ignition switch to the **RUN** position for 20 seconds.

**12.** If fuel does not appear at the fuel line unions after 20 seconds, allow the starter motor to cool for five minutes.

**13.** Repeat steps 11 and 12 until fuel appears at the fuel line unions.

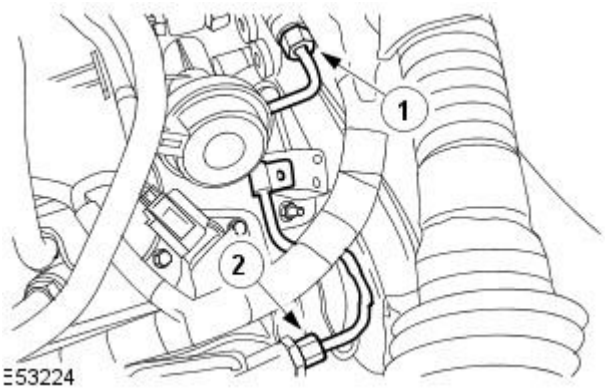


**14.** CAUTION: Make sure the tool used to tighten the high-pressure fuel supply line unions is used at the top of the unions as this is where there is most material. Failure to follow this instruction may result in damage to the unions.

Tighten the the high-pressure fuel supply line unions.

- Tighten the high-pressure fuel supply line in the sequence shown in four stages:
  1. Stage 1: Tighten the high-pressure fuel supply line union 1 to 15 Nm.
  2. Stage 2: Tighten the high-pressure fuel supply line union 2 to 15 Nm.
  3. Stage 3: Tighten the high-pressure fuel supply line union 1 to 30 Nm.
  4. Stage 4: Tighten the high-pressure fuel supply line union 2 to 30 Nm.

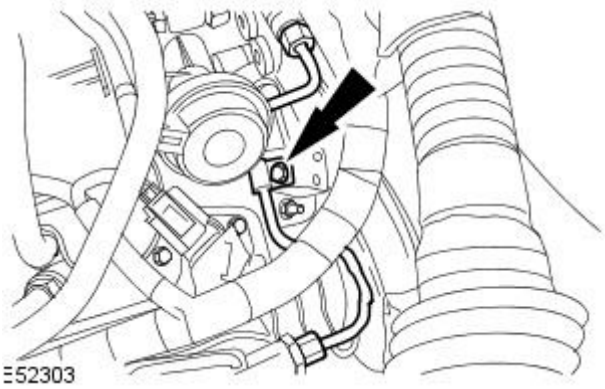


**15.** Attach the high-pressure fuel supply line clamp.

- Tighten to 10 Nm.

**16.** WARNING: Do not carry out any repairs to the fuel system with the engine running. The fuel pressure within the high-pressure system can be as high as 1650 bar. Failure to follow this instruction may result in personal injury.

Start the engine and check visually for fuel leaks.

GETtheMANUALS.org

**17.** Install the engine cover.

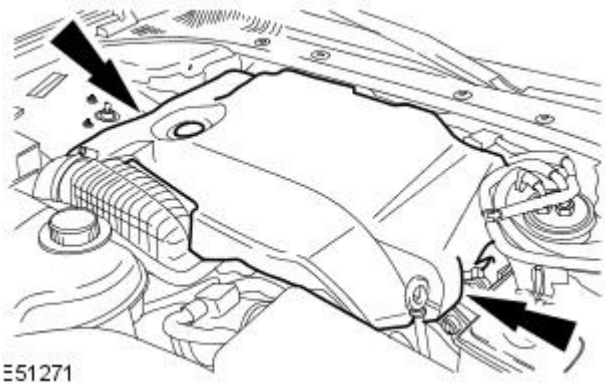


**18.** Install the oil filler cap.

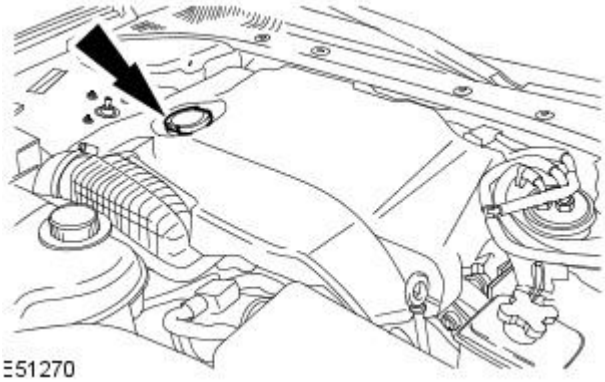


GETtheMANUALS.org

# Fuel System - General Information - Low-Pressure Fuel System Bleeding

General Procedures

• WARNINGS:

Wait at least 30 seconds after the engine stops before commencing any repair to the high-pressure fuel injection system. Failure to follow this instruction may result in personal injury.

Before any work is carried out on the fuel system, ground the vehicle to earth and maintain the ground connection until the work is complete.

Do not smoke or carry lighted tobacco or open flame of any type when working on or near any fuel related components. Highly flammable vapors are always present and may ignite. Failure to follow these instructions may result in personal injury.

After carrying out repairs, the fuel system must be checked visually for leaks. Failure to follow these instructions may result in personal injury.

If taken internally do not induce vomiting, seek immediate medical attention. Failure to follow these instructions may result in personal injury.

If fuel contacts the eyes, flush the eyes with cold water or eyewash solution and seek medical attention.

Wash hands thoroughly after handling, as prolonged contact may cause irritation. Should irritation develop, seek medical attention.

This procedure involves fuel handling. Be prepared for fuel spillage at all times and always observe fuel handling precautions. Failure to follow these instructions may result in personal injury.

• CAUTIONS:

Diesel fuel injection equipment is manufactured to very precise tolerances and fine clearances. It is therefore essential that absolute cleanliness is observed when working with these components. Always fit blanking plugs to any open orifices or lines.

This procedure must be carried out before the engine is attempted to be started, following removal or replacement of any low pressure fuel system component. Failure to follow this instruction will result in damage to the fuel injection pump.

The engine must not be cranked using the starter motor for more than 30 seconds. The starter motor must be allowed to cool for at least 5 minutes after cranking for 30 seconds. Failure to follow these instructions will result in damage to the starter motor.

• NOTE: This procedure is necessary if any low-pressure fuel system components are removed or replaced. These include the fuel filter, fuel lines, fuel tank or fuel cooler.

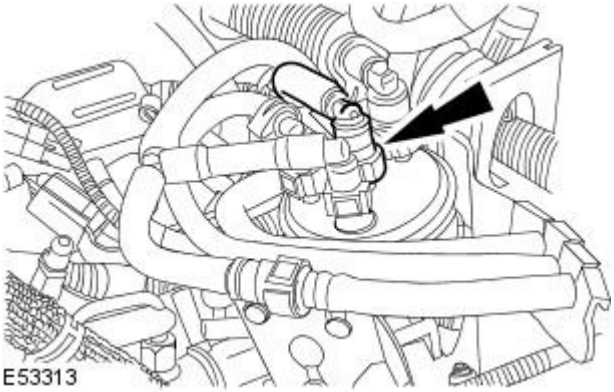


1. Disconnect the fuel filter to fuel pump supply line from the fuel filter. For additional information, refer to: Quick Release Coupling - Push Connect (310-00 Fuel System - General Information, General Procedures).

2. CAUTION: The tube used to bleed the low pressure fuel system must be absolutely clean. Failure to follow this instruction may result in foreign matter ingress to the fuel injection system.

   Connect a suitable clean, clear tube to the fuel pump supply outlet.

3. Place a suitable container under the tube to catch any escaping fuel.
4. Turn the ignition switch to the **ON** position for 10 seconds. The fuel pump in the fuel tank will be audible.
5. Turn the ignition switch to the **OFF** position.
6. Repeat steps 2 and 3 until air-free fuel escapes from the tube.
7. Disconnect and discard the tube from the fuel filter outlet line.

GETtheMANUALS.org

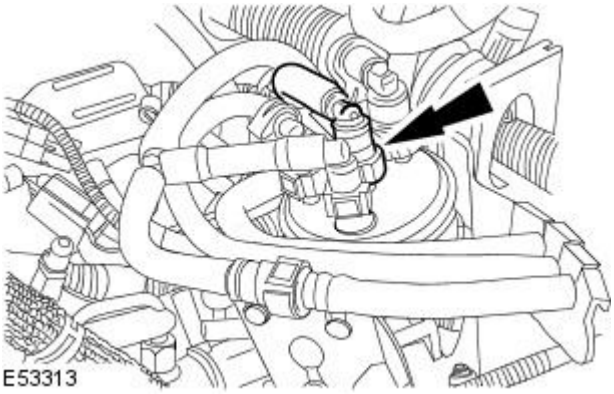


**8.** Connect the fuel filter to fuel pump supply line to the fuel filter.
For additional information, refer to: Quick Release Coupling - Push Connect (310-00 Fuel System - General Information, General Procedures).

**9.** CAUTION: If any high pressure fuel system components have been removed or replaced, the high pressure fuel system bleeding procedure must be carried out before the engine is started. Failure to follow this instruction may result in damage to the fuel injection pump.

If necessary, bleed the high pressure fuel system.
For additional information, refer to: High-Pressure Fuel System Bleeding (310-00 Fuel System - General Information, General Procedures).

**10.** Start the engine and allow to idle.

GETtheMANUALS.org

# Fuel System - General Information - Quick Release Coupling - Push Connect

General Procedures

## Disconnect

**1.** WARNINGS:

Place the vehicle in a quarantined area and arrange "No Smoking/Petrol Fumes" signs about the vehicle.

Before any work is carried out on the fuel system, ground the vehicle to earth and maintain the ground connection until the work is complete.

Do not smoke or carry lighted tobacco or open flame of any type when working on or near any fuel related components. Highly flammable vapors are always present and may ignite. Failure to follow these instructions may result in personal injury.

The fuel system remains pressurized for a long time after the ignition is switched off. The fuel pressure must be relieved before attempting any repairs. Failure to follow these instructions may result in personal injury.

After carrying out repairs, the fuel system must be checked visually for leaks. Failure to follow these instructions may result in personal injury.

This procedure involves fuel handling. Be prepared for fuel spillage at all times and always observe fuel handling precautions. Failure to follow these instructions may result in personal injury.

If taken internally do not induce vomiting, seek immediate medical attention. Failure to follow these instructions may result in personal injury.

If fuel contacts the eyes, flush the eyes with cold water or eyewash solution and seek medical attention.

Wash hands thoroughly after handling, as prolonged contact may cause irritation. Should irritation develop, seek medical attention.

Relieve the fuel system pressure. For additional information, refer to the procedure in this section:
For additional information, refer to: Fuel System Pressure Release (310-00 Fuel System - General Information, General Procedures).

**2.** Disconnect the push connect fitting.

1. Press the tang.
2. Disconnect the push connect fitting.

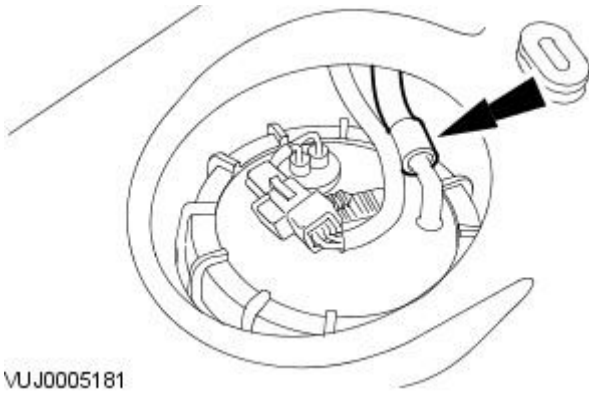


## Connect

GETtheMANUALS.org

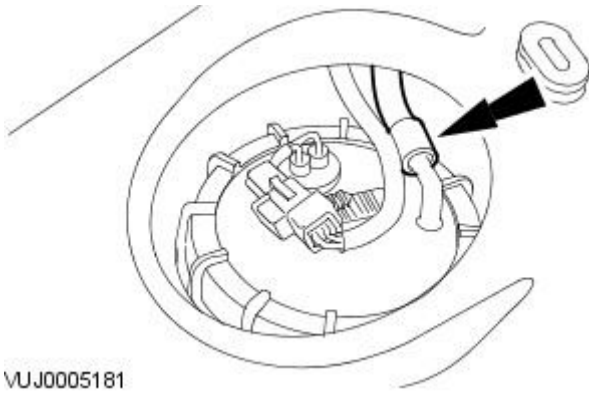


**1.** To connect.

- Support the male stub.
- Push the connector fitting onto the stub until an audible click can be heard.
- Check the connection by a gentle tug test.

GETtheMANUALS.org

# Fuel System - General Information - Quick Release Coupling

General Procedures

## Disconnect

**1.** WARNINGS:

Place the vehicle in a quarantined area and arrange "No Smoking/Petrol Fumes" signs about the vehicle.

Before any work is carried out on the fuel system, ground the vehicle to earth and maintain the ground connection until the work is complete.

Do not smoke or carry lighted tobacco or open flame of any type when working on or near any fuel related components. Highly flammable vapors are always present and may ignite. Failure to follow these instructions may result in personal injury.

The fuel system remains pressurized for a long time after the ignition is switched off. The fuel pressure must be relieved before attempting any repairs. Failure to follow these instructions may result in personal injury.

After carrying out repairs, the fuel system must be checked visually for leaks. Failure to follow these instructions may result in personal injury.

This procedure involves fuel handling. Be prepared for fuel spillage at all times and always observe fuel handling precautions. Failure to follow these instructions may result in personal injury.

If taken internally do not induce vomiting, seek immediate medical attention. Failure to follow these instructions may result in personal injury.

If fuel contacts the eyes, flush the eyes with cold water or eyewash solution and seek medical attention.

Wash hands thoroughly after handling, as prolonged contact may cause irritation. Should irritation develop, seek medical attention.

Relieve the fuel system pressure. For additional information, refer to the procedure in this section: Pressure Relief.

**2.** Disconnect the quick release fitting.

1. Release the retaining clip.
2. Disconnect the quick release fitting.

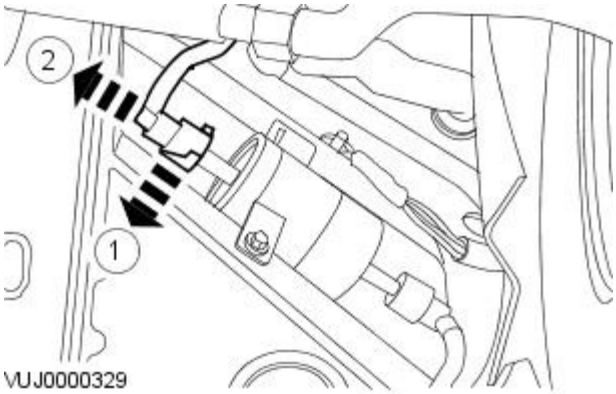


## Connect

**1.** To connect, reverse the disconnect procedure.

GETtheMANUALS.org

# Fuel System - General Information - Spring Lock Couplings

General Procedures

| Special Tool(s) | |
|---|---|
| 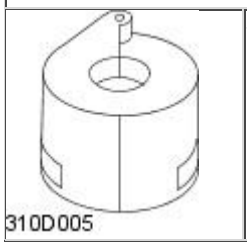 | Spring Lock Coupling Tool or Equivalent<br><br>310-D005 (23-040) |

## Disconnect

**1.** WARNINGS:

Place the vehicle in a quarantined area and arrange "No Smoking/Petrol Fumes" signs about the vehicle.

Before any work is carried out on the fuel system, ground the vehicle to earth and maintain the ground connection until the work is complete.

Do not smoke or carry lighted tobacco or open flame of any type when working on or near any fuel related components. Highly flammable vapors are always present and may ignite. Failure to follow these instructions may result in personal injury.

The fuel system remains pressurized for a long time after the ignition is switched off. The fuel pressure must be relieved before attempting any repairs. Failure to follow these instructions may result in personal injury.

After carrying out repairs, the fuel system must be checked visually for leaks. Failure to follow these instructions may result in personal injury.

This procedure involves fuel handling. Be prepared for fuel spillage at all times and always observe fuel handling precautions. Failure to follow these instructions may result in personal injury.

If taken internally do not induce vomiting, seek immediate medical attention. Failure to follow these instructions may result in personal injury.

If fuel contacts the eyes, flush the eyes with cold water or eyewash solution and seek medical attention.

Wash hands thoroughly after handling, as prolonged contact may cause irritation. Should irritation develop, seek medical attention.

Relieve the fuel system pressure. For additional information, refer to the procedure in this section: Pressure Relief.

**2.** Remove the safety clip from the spring lock coupling.

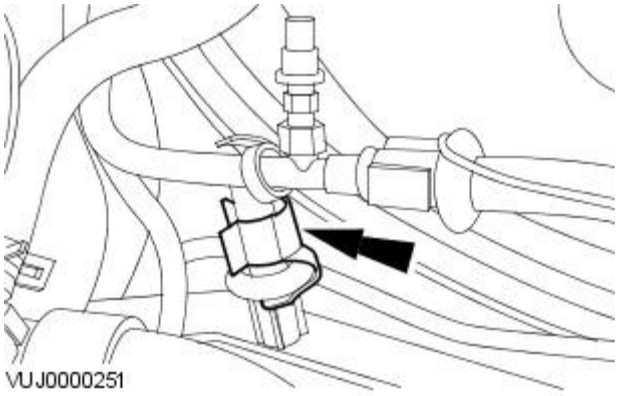


GETtheMANUALS.org

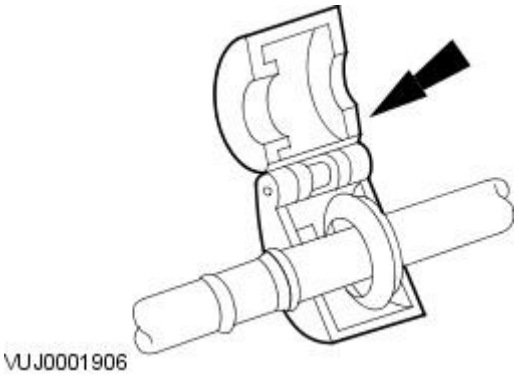


**3.** Install the special tool.

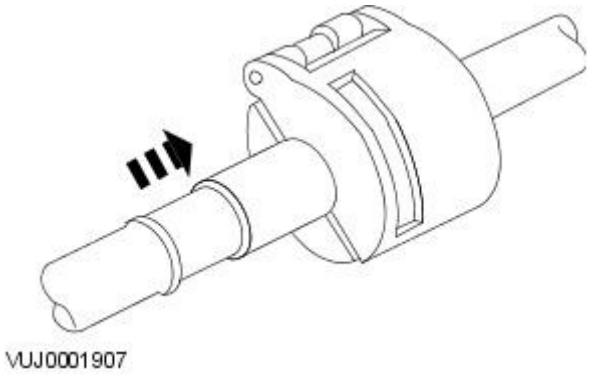


**4.** Close the special tool and push it into the female end of the spring lock coupling.

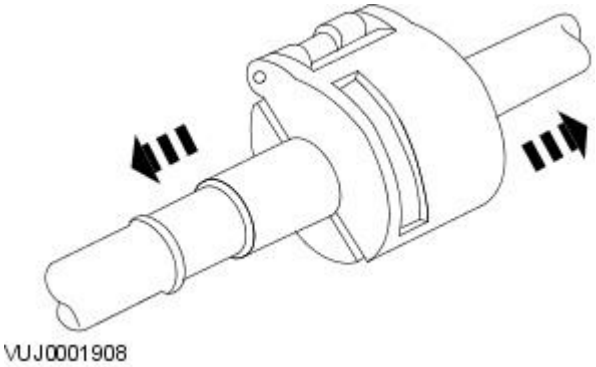


**5.** Disconnect the spring lock coupling.

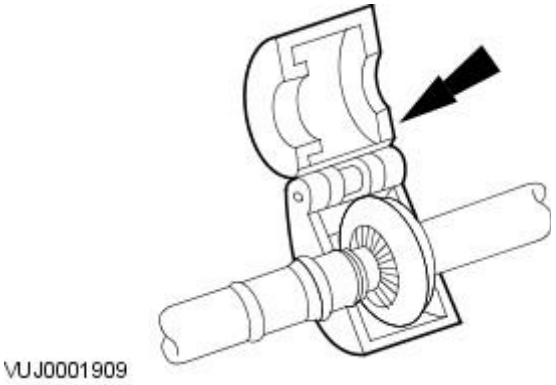


**6.** Remove the special tool.

## Connect

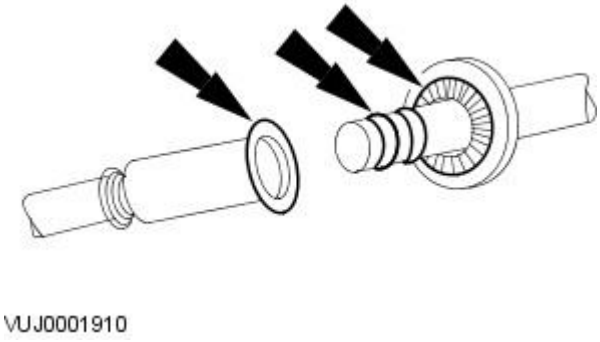


**1.** NOTE: Install new O-ring seals.

- NOTE: Install a new garter spring.

Clean and inspect the male and female ends of the spring lock coupling.

GETtheMANUALS.org

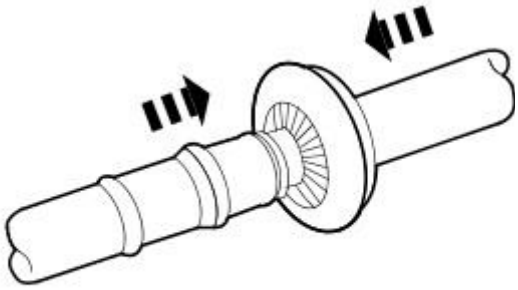

E31439

**2.** WARNING: Make sure the garter spring snaps over the male end of the spring lock coupling.

Connect the spring lock coupling.

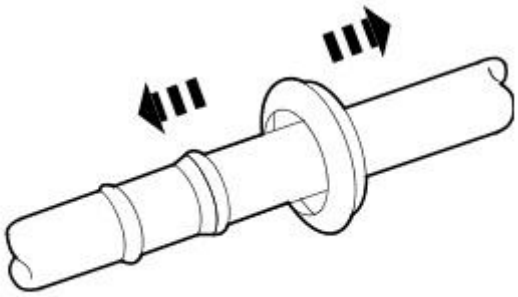

E31440

**3.** Check the spring lock coupling to make sure it is correctly connected.

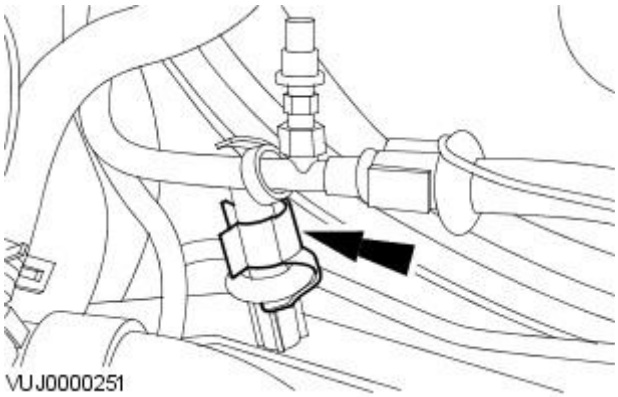

VUJ0000251

**4.** Install the safety clip to the spring lock coupling.

GETtheMANUALS.org

# Fuel Tank and Lines -

**Fuel Pressures**

| Variant | Fuel Pressure at Idle | Fuel Pressure at Wide Open Throttle |
|---|---|---|
| Vehicles with PTEC engine management: | | |
| All | 2.2 bar (31.9 lb/in²) (220 kPa) | 2.8 bar (40.6 lb/in²) (280 kPa) |
| Vehicles with Denso engine management: | | |
| V8 Naturally aspirated | 3 bar (43.5 lb/in²) (300 kPa) | 3.8 bar (55.1 lb/in²) (380 kPa) |
| V6 Naturally aspirated | 3.3 bar (47.9 lb/in²) (330 kPa) | 3.8 bar (55.1 lb/in²) (380 kPa) |
| V8 Supercharged | 3 bar (43.5 lb/in²) (300 kPa) | 5 bar (72.5 lb/in²) (500 kPa) |

**Torque Specifications**

| Description | Nm | lb/ft |
|---|---|---|
| Fuel tank support strap retaining bolts | 35 | 26 |
| Fuel pump module locking ring | 60 | 44 |
| Fuel transfer pump locking ring | 60 | 44 |

GETtheMANUALS.org

# Fuel Tank and Lines - Fuel Tank and LinesVIN Range: M45255->N52047

Description and Operation

Vehicles without supercharger

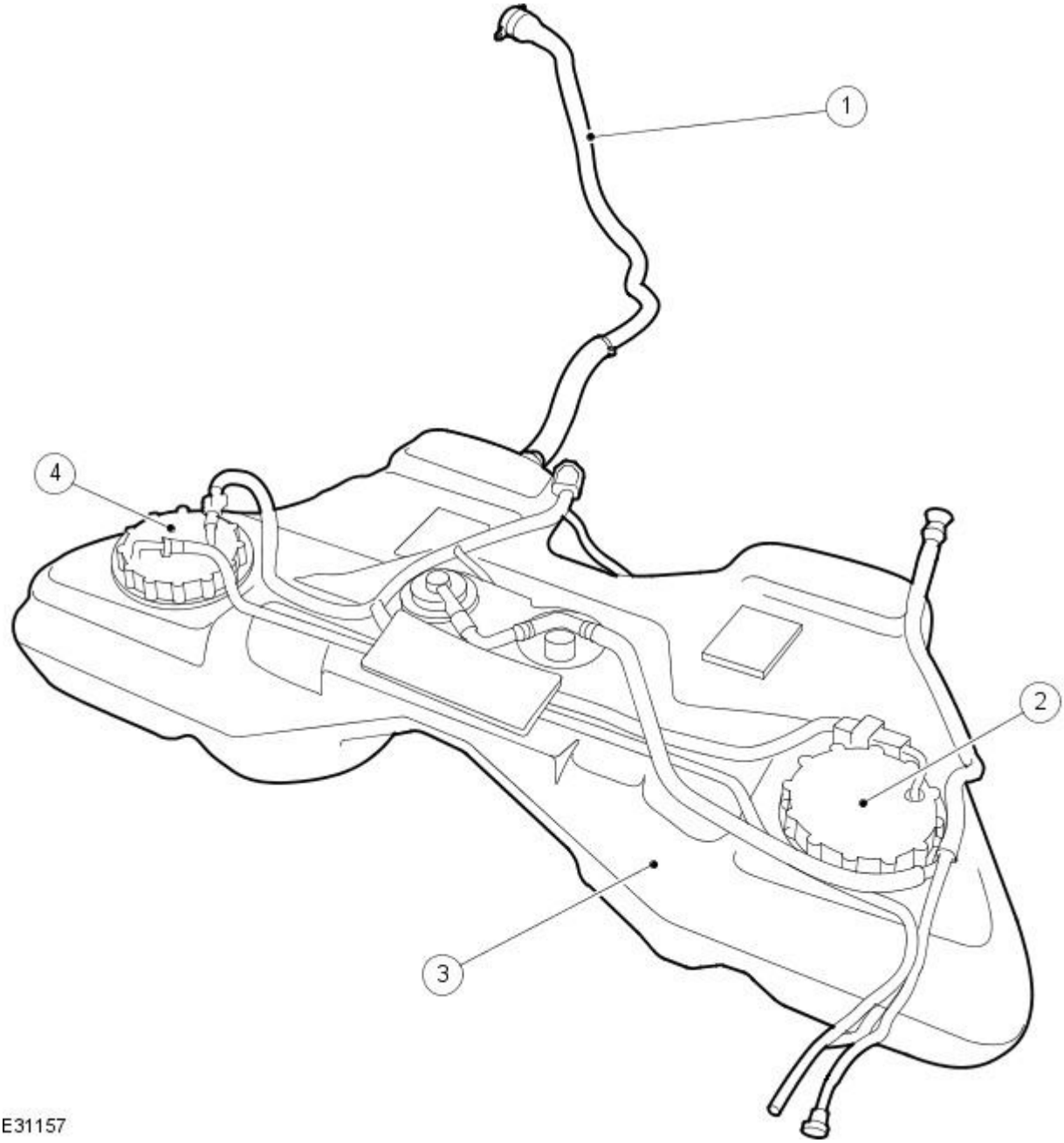


| Item | Part Number | Description |
|---|---|---|
| 1 | - | Fuel tank filler pipe |
| 2 | - | Fuel transfer pump |
| 3 | - | Fuel tank |
| 4 | - | Fuel pump module |

Vehicles with supercharger

GETtheMANUALS.org

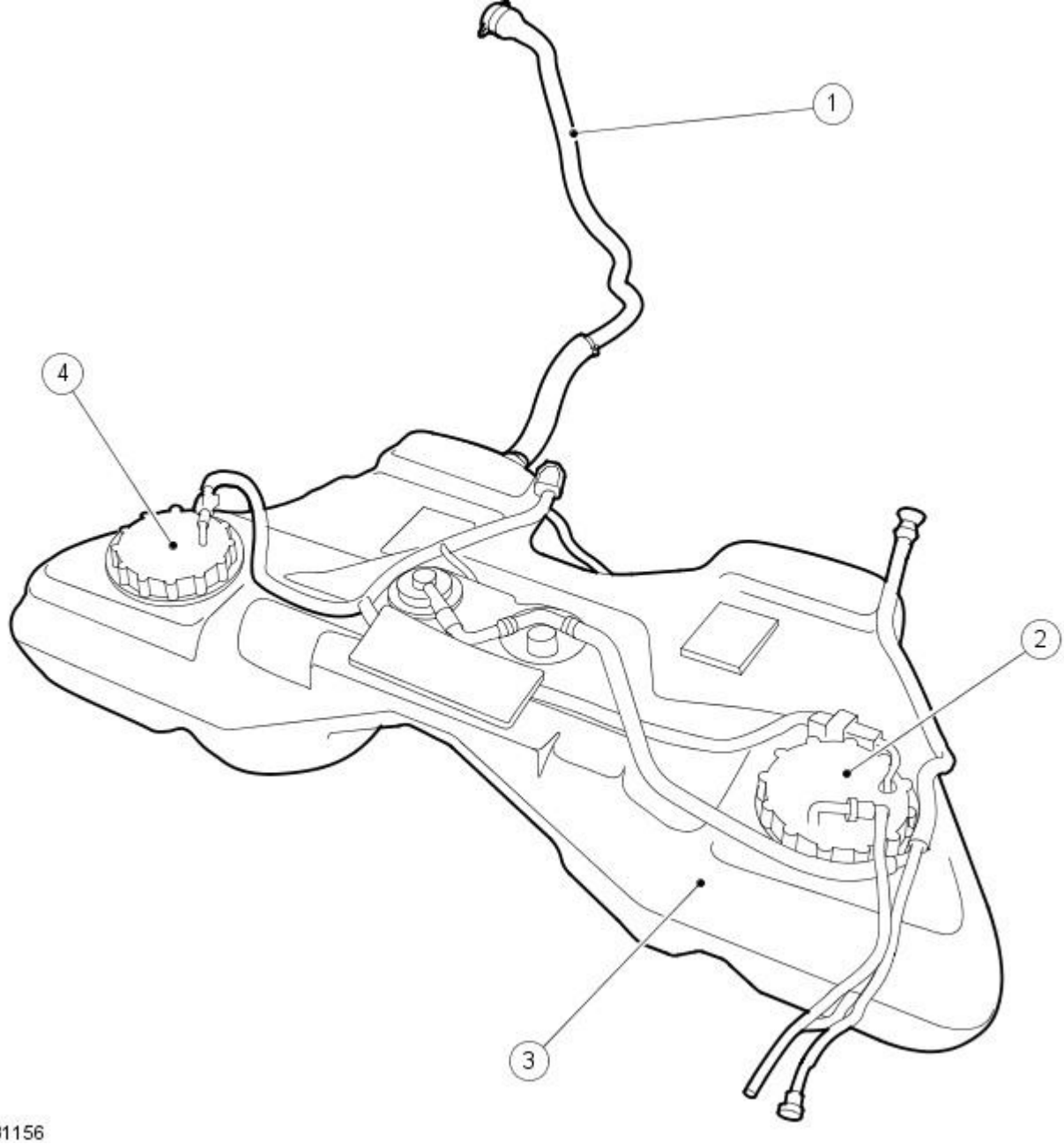


E31156

| Item | Part Number | Description |
|---|---|---|
| 1 | — | Fuel tank filler pipe |
| 2 | — | Left-hand fuel pump module |
| 3 | — | Fuel tank |
| 4 | — | Right-hand fuel pump module |

Vehicles with Diesel Engine

GETtheMANUALS.org

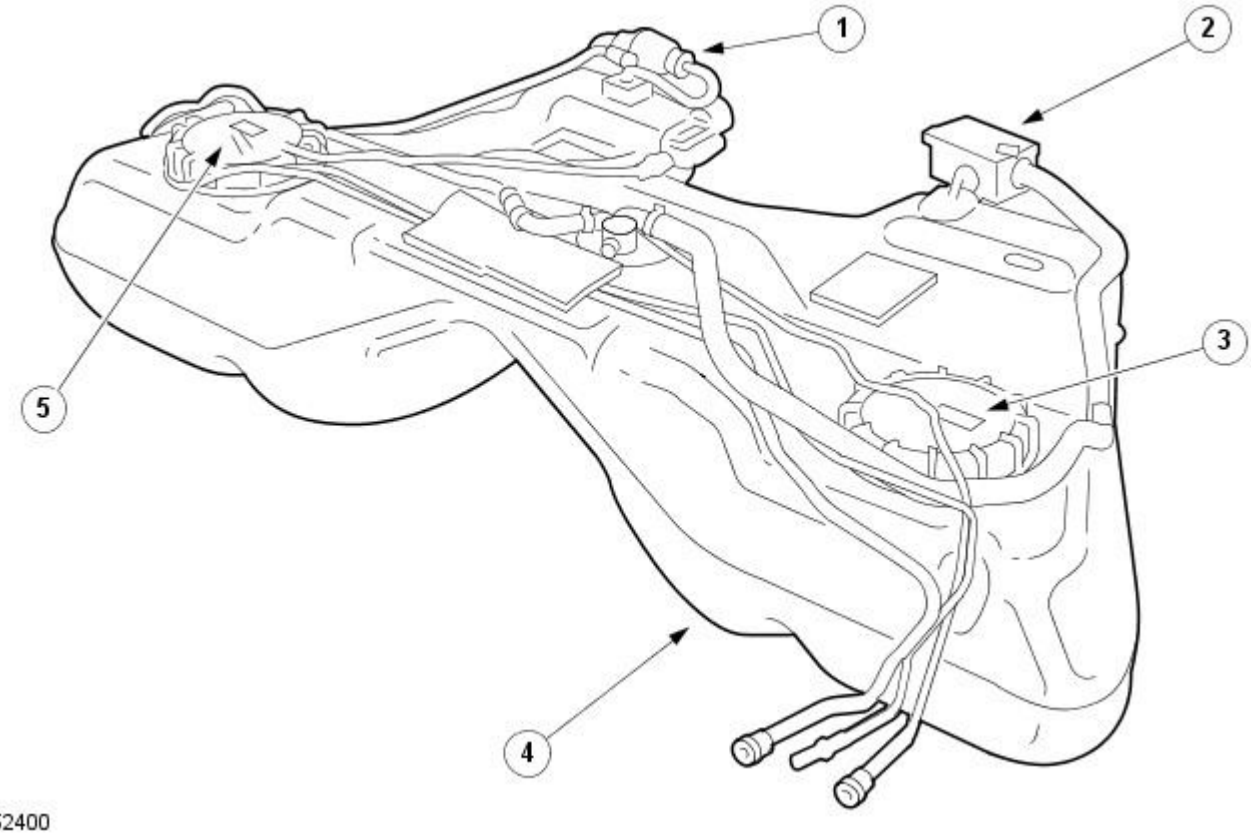


E52400

| Item | Part Number | Description |
|---|---|---|
| 1 | - | Auxiliary heater fuel supply pump |
| 2 | - | Fuel tank ventilation filter |
| 3 | - | Left-hand fuel level sensor module |
| 4 | - | Fuel tank |
| 5 | - | Right-hand fuel pump module |

## Fuel Tank

All Except Vehicles with Diesel Engine

The fuel tank is of a plastic construction and is retained to the vehicle by means of two steel support straps. The fuel tank support straps are mounted onto the underside of the vehicle chassis towards the front of the fuel tank and bolt to the vehicle towards the rear of the fuel tank. Fuel tank ventilation is achieved through a fuel tank roll-over valve into an evaporative emission canister which absorbs fuel tank vapor. The fuel tank roll-over valve is integral to the fuel tank and will prevent fuel loss from the fuel tank if the vehicle becomes inverted.

Vehicles with Diesel Engine

The fuel tank is of a plastic construction and is retained to the vehicle by means of two steel support straps. The fuel tank support straps are mounted onto the underside of the vehicle chassis towards the front of the fuel tank and bolt to the vehicle towards the rear of the fuel tank. Fuel tank ventilation is achieved through a fuel tank roll-over valve into a ventilation filter. The fuel tank roll-over valve is integral to the fuel tank and will prevent fuel loss from the fuel tank if the vehicle becomes inverted.

## Fuel Filter

All Except Vehicles with Diesel Engine

The fuel filter is of a conventional construction being that of a paper element sealed within a steel canister. The fuel filter is located behind the left-hand front fender splash shield.

Vehicles with Diesel Engine

The diesel fuel filter is located in the engine compartment. Incorporated in to the fuel filter housing is a bimetallic valve which will start to close at 30°C (86°F) and will fully close at 50°C (122°F).

When the bimetallic valve is open, fuel is only allowed to pass through the fuel cooler in the engine vee, which aids warm up of the fuel at low temperatures. When the fuel temperature increases, the bimetallic valve closes, diverting fuel through the under-floor fuel cooler which then lowers the fuel temperature before returning the fuel back to the fuel filter.

The fuel filter has an air bleed return to the fuel tank which returns excess air and fuel back to the fuel tank.

## Fuel Tank Filler Pipe

Vehicles built up to 01/2004

The fuel tank filler pipe is of steel construction and is retained to the vehicle by means of one lower retaining bolt and three upper retaining bolts. The fuel tank filler pipe is fitted with a twist-fit filler cap, which seals the system.

Vehicles built 02/2004 onwards

The fuel tank filler pipe is of stainless steel construction and is retained to the vehicle by means of one lower retaining bolt, one lower retaining nut and one upper retaining nut. The fuel tank filler pipe is fitted with a twist-fit filler cap, which seals the system.

## Inertia Fuel Shutoff (IFS) Switch

GETtheMANUALS.org

All vehicles

The inertia fuel shutoff (IFS) switch is designed to cut power to the fuel pump in the event of an accident. It is located behind the left-hand cowl side trim panel.

## Fuel Pumps

All Except Vehicles with Diesel Engine

The fuel pumps are electric turbine type pumps and are located inside the fuel tank, one on the left-hand side and one on the right-hand side on supercharged vehicles. They both feature an integral fuel tank sender unit and each is retained to the fuel tank by means of a locking ring.

As the fuel tank is of a saddle design, a fuel pump module and a fuel transfer pump are incorporated. The fuel pump module located in the right-hand side of the fuel tank transfers fuel to the left-hand side of the fuel tank. The fuel transfer pump located in the left-hand side of the fuel tank transfers fuel to the fuel pump module and then the engine.

Vehicles with Diesel Engine

The fuel pump is an electric turbine type and is located in the right-hand side of the fuel tank. The fuel pump supplies fuel to the fuel injection pump and also circulates fuel from the left-hand side of the fuel tank by means of fuel transfer pipes incorporated in the fuel pump module.

The fuel tank incorporates two fuel level sensors, one in the right hand fuel pump module and one in the left-hand fuel tank level sensor. Both the fuel pump and fuel tank level sensor modules are retained to the fuel tank by means of a locking ring.

## Fuel cooler

Vehicles with Diesel Engine

Two fuel coolers are fitted to the vehicle. One is located in the vee of the engine block, which has a coolant connection to aid heat transfer. The second cooler is located in the fuel return line and is located under the vehicle on the left-hand side. Fuel flow through the under-floor cooler is controlled by the fuel filter.

GETtheMANUALS.org

# Fuel Tank and Lines - Fuel Tank and LinesVIN Range: N52048->N99999

Description and Operation

Vehicles without Diesel Engine

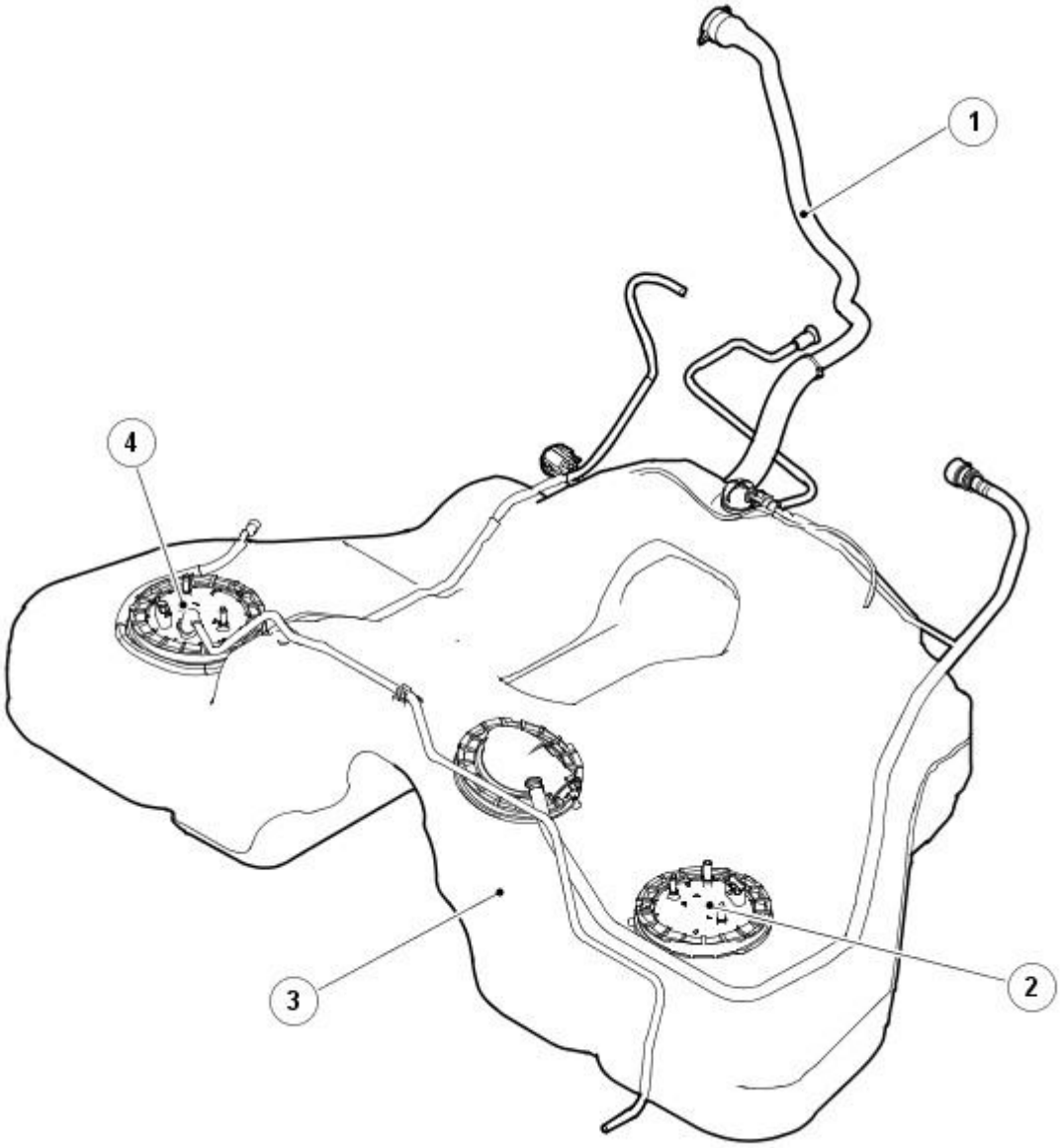


E64139

| Item | Part Number | Description |
|---|---|---|
| 1 | - | Fuel tank filler pipe |
| 2 | - | Fuel transfer module |
| 3 | - | Fuel tank |
| 4 | - | Fuel pump module |

Vehicles with Diesel Engine

GETtheMANUALS.org

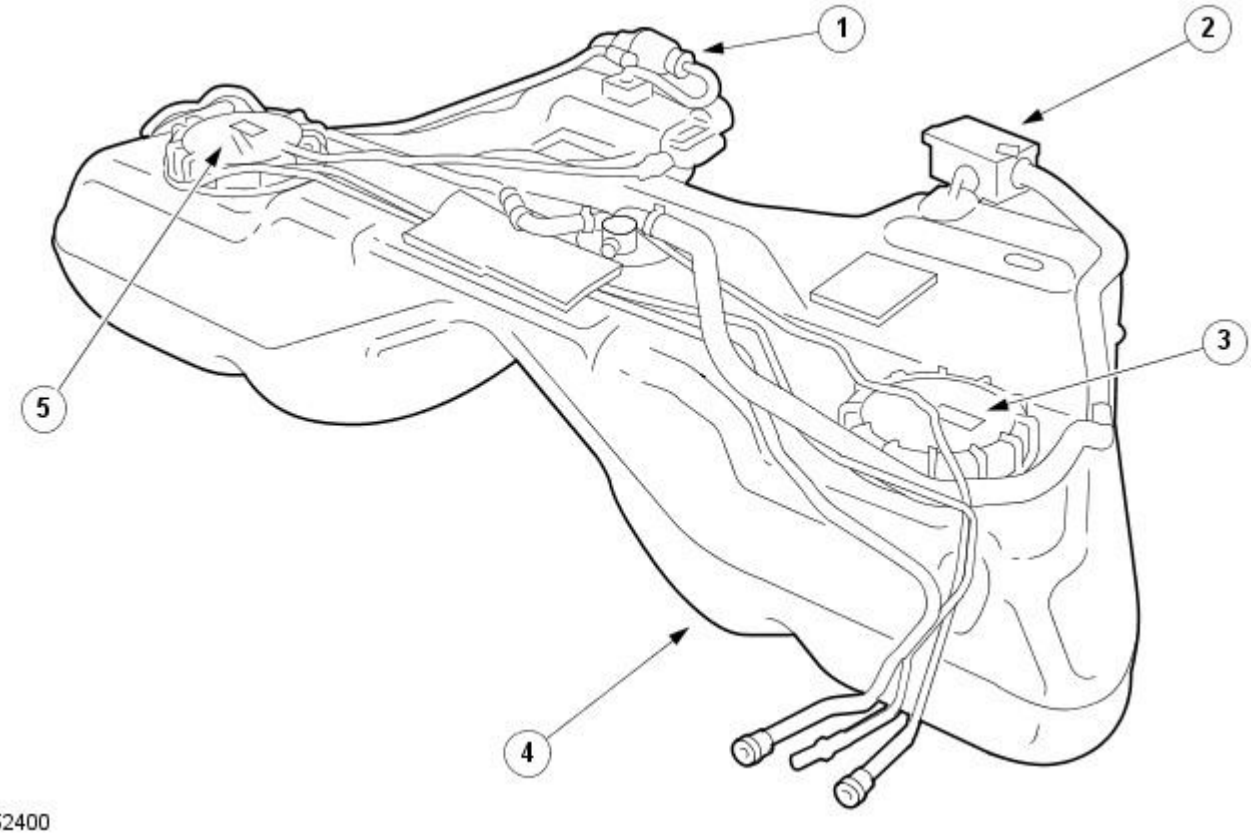


E52400

| Item | Part Number | Description |
|---|---|---|
| 1 | - | Auxiliary heater fuel supply pump |
| 2 | - | Fuel tank ventilation filter |
| 3 | - | Left-hand fuel level sensor module |
| 4 | - | Fuel tank |
| 5 | - | Right-hand fuel pump module |

## Fuel Tank

Vehicles without Diesel Engine

The fuel tank is of a plastic construction and is retained to the vehicle by means of two steel support straps. The fuel tank support straps are mounted onto the underside of the vehicle chassis towards the front of the fuel tank and bolt to the vehicle towards the rear of the fuel tank. Fuel tank ventilation is achieved through a fuel tank roll-over valve into an evaporative emission canister which absorbs fuel tank vapor. The fuel tank roll-over valve is integral to the fuel tank and will prevent fuel loss from the fuel tank if the vehicle becomes inverted.

Vehicles with Diesel Engine

The fuel tank is of a plastic construction and is retained to the vehicle by means of two steel support straps. The fuel tank support straps are mounted onto the underside of the vehicle chassis towards the front of the fuel tank and bolt to the vehicle towards the rear of the fuel tank. Fuel tank ventilation is achieved through a fuel tank roll-over valve into a ventilation filter. The fuel tank roll-over valve is integral to the fuel tank and will prevent fuel loss from the fuel tank if the vehicle becomes inverted.

## Fuel Filter

Vehicles without Diesel Engine

The fuel filter is of a conventional construction being that of a paper element sealed within a steel canister. The fuel filter is located behind the left-hand front fender splash shield.

Vehicles with Diesel Engine

The diesel fuel filter is located in the engine compartment. Incorporated in to the fuel filter housing is a bimetallic valve which will start to close at 30°C (86°F) and will fully close at 50°C (122°F).

When the bimetallic valve is open, fuel is only allowed to pass through the fuel cooler in the engine vee, which aids warm up of the fuel at low temperatures. When the fuel temperature increases, the bimetallic valve closes, diverting fuel through the under-floor fuel cooler which then lowers the fuel temperature before returning the fuel back to the fuel filter.

The fuel filter has an air bleed return to the fuel tank which returns excess air and fuel back to the fuel tank.

## Fuel Tank Filler Pipe

The fuel tank filler pipe is of stainless steel construction and is retained to the vehicle by means of one lower retaining bolt, one lower retaining nut and one upper retaining nut. The fuel tank filler pipe is fitted with a twist-fit filler cap, which seals the system.

## Inertia Fuel Shutoff (IFS) Switch

The inertia fuel shutoff (IFS) switch is designed to cut power to the fuel pump in the event of an accident. It is located behind the left-hand cowl side trim panel.

## Fuel Modules

GETtheMANUALS.org

Vehicles without Diesel Engine

As the fuel tank is of a saddle design, a fuel pump module and a fuel transfer module are incorporated.

The fuel pump module is an electric turbine type pump and is located inside the fuel tank, on the right-hand side. Both the fuel pump and fuel transfer module feature an integral fuel tank sender unit and each is retained to the fuel tank by means of a locking ring.

Vehicles with Diesel Engine

The fuel pump is an electric turbine type and is located in the right-hand side of the fuel tank. The fuel pump supplies fuel to the fuel injection pump and also circulates fuel from the left-hand side of the fuel tank by means of fuel transfer pipes incorporated in the fuel pump module.

The fuel tank incorporates two fuel level sensors, one in the right-hand fuel pump module and one in the left-hand fuel tank level sensor. Both the fuel pump and fuel tank level sensor modules are retained to the fuel tank by means of a locking ring.

## Fuel cooler

Vehicles with Diesel Engine

Two fuel coolers are fitted to the vehicle. One is located in the vee of the engine block, which has a coolant connection to aid heat transfer. The second cooler is located in the fuel return line and is located under the vehicle on the left-hand side. Fuel flow through the underfloor cooler is controlled by the fuel filter.

GETtheMANUALS.org

# Fuel Tank and Lines - Fuel Tank and LinesV8 4.2L Petrol/V8 S/C 4.2L Petrol/2.5L NA V6 - AJV6/3.0L NA V6 - AJ27, VIN Range: M45255->N52047

Diagnosis and Testing

1. **1.** Verify the customer concern by operating the system.
2. **2.** Visually inspect for obvious signs of mechanical or electrical damage.

**Visual Inspection Chart**

| Mechanical | Electrical |
|---|---|
| Damaged fuel lines. | Inertia fuel shutoff (IFS) switch. |
| Damaged push connect fittings. | Loose or corroded electrical connectors. |
| Fuel leaks. | Fuel pump module |
| Damaged fuel tank filler pipe cap. | Fuse(s) |
| Damaged fuel tank filler pipe. | - |

3. **3.** If an obvious cause for an observed or reported concern is found, correct the cause (if possible) before proceeding to the next step.
4. **4.** If the concern is not visually evident, verify the symptom and refer to Jaguar Approved Diagnostic System.

GETtheMANUALS.org

# Fuel Tank and Lines - Fuel Tank and LinesV8 4.2L Petrol/V8 S/C 4.2L Petrol/2.5L NA V6 - AJV6/3.0L NA V6 - AJ27, VIN Range: N52048->N80180

Diagnosis and Testing

## Overview

There are changes to the engine management system (EMS) for 2006 my, the most obvious of which will be the change to 7-digit diagnostic trouble codes (DTCs) from the familiar 5-digit, and the change from two fuel pumps for vehicles with supercharger to a single pump.

For additional information on the description and operation of the fuel system.
REFER to: Fuel Tank and Lines - VIN Range: N52048->N99999 (310-01 Fuel Tank and Lines, Description and Operation).

## Inspection and Verification

1. **1.** Verify the customer concern.
2. **2.** Visually inspect for obvious signs of mechanical or electrical damage.

**Visual Inspection Chart**

| Mechanical | Electrical |
|---|---|
| • Fuel leaks<br>• Damaged fuel lines<br>• Damaged push connect fittings<br>• Fuel level<br>• Fuel contamination/grade/quality<br>• Damaged fuel tank filler pipe cap<br>• Damaged fuel tank filler pipe | • Fuses<br>• Inertia switch<br>• Loose or corroded electrical connectors<br>• Harnesses<br>• Fuel pump driver module (FPDM)<br>• Rear electronic module (REM)<br>• Fuel pump relay<br>• Engine control module (ECM) |

3. **3.** If an obvious cause for an observed or reported symptom is found, correct the cause (if possible) before proceeding to the next step.
4. **4.** If the cause is not visually evident use the Jaguar approved diagnostic system or a scan tool to retrieve the fault codes before proceeding to the diagnostic trouble code (DTC) Index.

## Symptom Chart

| Symptom | Possible source | Action |
|---|---|---|
| Engine cranks, but does not fire | • Engine breather system disconnected/restricted<br>• Ignition system<br>• Fuel system<br>• Harness<br>• Crankshaft position (CKP) sensor<br>• ECM fault | Check the engine breather system,<br>REFER to: Engine Emission Control - VIN Range: N80181->R99999 (303-08A Engine Emission Control - V8 4.2L Petrol/V8 S/C 4.2L Petrol/2.5L NA V6 - AJV6/3.0L NA V6 - AJ27, Diagnosis and Testing).<br>For ignition system,<br>REFER to: Engine Ignition - VIN Range: N52048->N99999 (303-07A Engine Ignition - 2.5L NA V6 - AJV6/3.0L NA V6 - AJ27, Diagnosis and Testing).<br>or<br>REFER to: Engine Ignition - VIN Range: N52048->N99999 (303-07B Engine Ignition - V8 4.2L Petrol/V8 S/C 4.2L Petrol, Diagnosis and Testing).<br>For fuel pressure test, GO to Pinpoint Test E. For CKP tests,<br>REFER to: Electronic Engine Controls - VIN Range: N80181->R99999 (303-14A Electronic Engine Controls - 2.5L NA V6 - AJV6/3.0L NA V6 - AJ27, Diagnosis and Testing).<br>or<br>REFER to: Electronic Engine Controls - VIN Range: N80181->R99999 (303-14B Electronic Engine Controls - V8 4.2L Petrol/V8 S/C 4.2L Petrol, Diagnosis and Testing).<br>Refer to the warranty policy and procedures manual if an ECM is suspect. |
| Engine cranks and fires, but will not start | • Evaporative emissions purge valve<br>• Fuel pump<br>• Spark plugs<br>• HT short to ground (tracking) check rubber boots for cracks/damage<br>• Ignition coil failure(s)<br>• Harness | REFER to: Evaporative Emissions - VIN Range: N52048->N99999 (303-13 Evaporative Emissions, Diagnosis and Testing).For purge valve tests, For fuel pressure test, GO to Pinpoint Test E.<br>For ignition system,<br>REFER to: Engine Ignition - VIN Range: N52048->N99999 (303-07A Engine Ignition - 2.5L NA V6 - AJV6/3.0L NA V6 - AJ27, Diagnosis and Testing).<br>or<br>REFER to: Engine Ignition - VIN Range: N52048->N99999 (303-07B Engine Ignition - V8 4.2L Petrol/V8 S/C 4.2L Petrol, Diagnosis and Testing). |
| Difficult to start cold | • Check coolant anti-freeze content<br>• Battery<br>• CKP sensor<br>• Exhaust gas recirculation (EGR) valve stuck open<br>• Fuel pump<br>• Evaporative emissions purge valve | Check engine coolant level and condition. For battery information,<br>REFER to: Battery (414-01 Battery, Mounting and Cables, Diagnosis and Testing).<br>For CKP sensor tests,<br>REFER to: Electronic Engine Controls - VIN Range: N80181->R99999 (303-14A Electronic Engine Controls - 2.5L NA V6 - AJV6/3.0L NA V6 - AJ27, Diagnosis and Testing).<br>or<br>REFER to: Electronic Engine Controls - VIN Range: N80181->R99999 (303-14B Electronic Engine Controls - V8 4.2L Petrol/V8 S/C 4.2L Petrol, Diagnosis and Testing).<br>For EGR system information,<br>REFER to: Engine Emission Control - VIN Range: N80181->R99999 (303-08A Engine Emission Control - V8 4.2L Petrol/V8 S/C 4.2L Petrol/2.5L NA V6 - AJV6/3.0L NA V6 - AJ27, |

GETtheMANUAL.com

| Symptom | Possible source | Action |
|---|---|---|
| | | Diagnosis and Testing).<br>For fuel pressure test, GO to Pinpoint Test E. For purge valve tests,<br>REFER to: Evaporative Emissions - VIN Range: N52048->N99999 (303-13 Evaporative Emissions, Diagnosis and Testing). |
| Difficult to start hot | • Injector leak<br>• Engine fuel temperature (EFT) sensor<br>• Intake air temperature (IAT) sensor<br>• Mass air flow (MAF) sensor<br>• Evaporative emissions purge valve<br>• Fuel pump<br>• Ignition system<br>• EGR valve stuck open | For fuel injector information,<br>REFER to: Fuel Injectors (303-04A Fuel Charging and Controls - 2.5L NA V6 - AJV6/3.0L NA V6 - AJ27, Removal and Installation).<br>or<br>REFER to: Fuel Injectors (303-04B Fuel Charging and Controls - V8 4.2L Petrol/V8 S/C 4.2L Petrol, Removal and Installation).<br>For EFT, IAT and MAF sensor tests,<br>REFER to: Electronic Engine Controls - VIN Range: N80181->R99999 (303-14A Electronic Engine Controls - 2.5L NA V6 - AJV6/3.0L NA V6 - AJ27, Diagnosis and Testing).<br>or<br>REFER to: Electronic Engine Controls - VIN Range: N80181->R99999 (303-14B Electronic Engine Controls - V8 4.2L Petrol/V8 S/C 4.2L Petrol, Diagnosis and Testing).<br>For purge valve tests,<br>REFER to: Evaporative Emissions - VIN Range: N52048->N99999 (303-13 Evaporative Emissions, Diagnosis and Testing).<br>For fuel pressure test, GO to Pinpoint Test E. For ignition system,<br>REFER to: Engine Ignition - VIN Range: N52048->N99999 (303-07A Engine Ignition - 2.5L NA V6 - AJV6/3.0L NA V6 - AJ27, Diagnosis and Testing).<br>or<br>REFER to: Engine Ignition - VIN Range: N52048->N99999 (303-07B Engine Ignition - V8 4.2L Petrol/V8 S/C 4.2L Petrol, Diagnosis and Testing).<br>For EGR tests,<br>REFER to: Engine Emission Control - VIN Range: N80181->R99999 (303-08A Engine Emission Control - V8 4.2L Petrol/V8 S/C 4.2L Petrol/2.5L NA V6 - AJV6/3.0L NA V6 - AJ27, Diagnosis and Testing). |
| Difficult to start after hot soak (vehicle standing after engine has reached operating temperature) | • Injector leak<br>• EFT sensor<br>• IAT sensor<br>• MAF sensor<br>• Evaporative emissions purge valve<br>• Fuel pump<br>• Ignition system<br>• EGR valve stuck open | For fuel injector tests,<br>REFER to: Fuel Charging and Controls - VIN Range: N52048->N99999 (303-04A Fuel Charging and Controls - 2.5L NA V6 - AJV6/3.0L NA V6 - AJ27, Diagnosis and Testing).<br>or<br>REFER to: Fuel Charging and Controls - VIN Range: N52048->N99999 (303-04B Fuel Charging and Controls - V8 4.2L Petrol/V8 S/C 4.2L Petrol, Diagnosis and Testing).<br>For fuel temperature sensor, IAT sensor and MAF sensor tests,<br>REFER to: Electronic Engine Controls - VIN Range: N80181->R99999 (303-14A Electronic Engine Controls - 2.5L NA V6 - AJV6/3.0L NA V6 - AJ27, Diagnosis and Testing).<br>or<br>REFER to: Electronic Engine Controls - VIN Range: N80181->R99999 (303-14B Electronic Engine Controls - V8 4.2L Petrol/V8 S/C 4.2L Petrol, Diagnosis and Testing).<br>For purge valve tests,<br>REFER to: Evaporative Emissions - VIN Range: N52048->N99999 (303-13 Evaporative Emissions, Diagnosis and Testing).<br>For fuel pressure test, GO to Pinpoint Test E. For ignition system,<br>REFER to: Electronic Engine Controls - VIN Range: N80181->R99999 (303-14A Electronic Engine Controls - 2.5L NA V6 - AJV6/3.0L NA V6 - AJ27, Diagnosis and Testing).<br>or<br>REFER to: Electronic Engine Controls - VIN Range: N80181->R99999 (303-14B Electronic Engine Controls - V8 4.2L Petrol/V8 S/C 4.2L Petrol, Diagnosis and Testing).<br>For EGR tests,<br>REFER to: Engine Emission Control - VIN Range: N80181->R99999 (303-08A Engine Emission Control - V8 4.2L Petrol/V8 S/C 4.2L Petrol/2.5L NA V6 - AJV6/3.0L NA V6 - AJ27, Diagnosis and Testing). |
| Engine stalls soon after start | • Breather system disconnected/restricted<br>• ECM relay<br>• Harness<br>• MAF sensor<br>• Ignition system<br>• Air filter restricted<br>• Fuel lines<br>• Fuel rail pressure (FRP) sensor<br>• Air leakage | For breather system information,<br>REFER to: Engine Emission Control - VIN Range: N80181->R99999 (303-08A Engine Emission Control - V8 4.2L Petrol/V8 S/C 4.2L Petrol/2.5L NA V6 - AJV6/3.0L NA V6 - AJ27, Diagnosis and Testing).<br>For ECM relay and MAF sensor tests,<br>REFER to: Electronic Engine Controls - VIN Range: N80181->R99999 (303-14A Electronic Engine Controls - 2.5L NA V6 - AJV6/3.0L NA V6 - AJ27, Diagnosis and Testing).<br>or<br>REFER to: Electronic Engine Controls - VIN Range: N80181->R99999 (303-14B Electronic Engine Controls - V8 4.2L Petrol/V8 S/C 4.2L Petrol, Diagnosis and Testing).<br>For ignition system,<br>REFER to: Engine Ignition - VIN Range: N52048->N99999 (303-07A Engine Ignition - 2.5L NA V6 - AJV6/3.0L NA V6 - AJ27, Diagnosis and Testing).<br>or<br>REFER to: Engine Ignition - VIN Range: N52048->N99999 (303-07B Engine Ignition - V8 4.2L Petrol/V8 S/C 4.2L Petrol, Diagnosis and Testing). |

GETtheMANUAL.com

| Symptom | Possible source | Action |
|---|---|---|
| | | For air filter and intake information,<br>REFER to: Intake Air Distribution and Filtering - VIN Range: N52048->N99999 (303-12A Intake Air Distribution and Filtering - 2.5L NA V6 - AJV6/3.0L NA V6 - AJ27, Diagnosis and Testing).<br>or<br>REFER to: Intake Air Distribution and Filtering - VIN Range: N52048->N99999 (303-12B Intake Air Distribution and Filtering - V8 4.2L Petrol/V8 S/C 4.2L Petrol, Diagnosis and Testing).<br>For fuel line tests, GO to Pinpoint Test F. For FRP sensor tests,<br>REFER to: Electronic Engine Controls - VIN Range: N80181->R99999 (303-14A Electronic Engine Controls - 2.5L NA V6 - AJV6/3.0L NA V6 - AJ27, Diagnosis and Testing).<br>or<br>REFER to: Electronic Engine Controls - VIN Range: N80181->R99999 (303-14B Electronic Engine Controls - V8 4.2L Petrol/V8 S/C 4.2L Petrol, Diagnosis and Testing). |
| Engine hesitates/poor acceleration | • Fuel pump<br>• Injector leak<br>• Fuel pressure<br>• Fuel lines<br>• Air leakage<br>• Throttle position (TP) sensors<br>• Accelerator pedal position (APP) sensor<br>• Throttle motor<br>• Ignition system<br>• EGR system<br>• HO2 sensors<br>• Transmission malfunction<br>• Restricted pedal travel (carpet, etc) | For fuel pressure test, GO to Pinpoint Test E. For fuel line tests, GO to Pinpoint Test F. For intake system,<br>REFER to: Intake Air Distribution and Filtering - VIN Range: N52048->N99999 (303-12A Intake Air Distribution and Filtering - 2.5L NA V6 - AJV6/3.0L NA V6 - AJ27, Diagnosis and Testing).<br>or<br>REFER to: Intake Air Distribution and Filtering - VIN Range: N52048->N99999 (303-12B Intake Air Distribution and Filtering - V8 4.2L Petrol/V8 S/C 4.2L Petrol, Diagnosis and Testing).<br>For FRP, TP, APP sensor and throttle motor tests,<br>REFER to: Electronic Engine Controls - VIN Range: N80181->R99999 (303-14A Electronic Engine Controls - 2.5L NA V6 - AJV6/3.0L NA V6 - AJ27, Diagnosis and Testing).<br>or<br>REFER to: Electronic Engine Controls - VIN Range: N80181->R99999 (303-14B Electronic Engine Controls - V8 4.2L Petrol/V8 S/C 4.2L Petrol, Diagnosis and Testing).<br>For ignition system,<br>REFER to: Engine Ignition - VIN Range: N52048->N99999 (303-07A Engine Ignition - 2.5L NA V6 - AJV6/3.0L NA V6 - AJ27, Diagnosis and Testing).<br>or<br>REFER to: Engine Ignition - VIN Range: N52048->N99999 (303-07B Engine Ignition - V8 4.2L Petrol/V8 S/C 4.2L Petrol, Diagnosis and Testing).<br>For EGR,<br>REFER to: Engine Emission Control - VIN Range: N80181->R99999 (303-08A Engine Emission Control - V8 4.2L Petrol/V8 S/C 4.2L Petrol/2.5L NA V6 - AJV6/3.0L NA V6 - AJ27, Diagnosis and Testing).<br>Check for DTCs indicating a faulty HO2 sensor. Refer to the DTC index. For transmission information,<br>REFER to: Diagnostic Strategy - VIN Range: N52048->N99999 (307-01 Automatic Transmission/Transaxle, Diagnosis and Testing).<br>Check accelerator pedal travel. |
| Engine backfires | • Fuel pump<br>• Fuel lines<br>• Air leakage<br>• MAF sensor<br>• APP sensor<br>• HO2 sensors<br>• Ignition system<br>• Sticking variable camshaft timing (VCT) hub | For fuel pressure test, GO to Pinpoint Test E. For fuel line tests, GO to Pinpoint Test F. For intake system,<br>REFER to: Intake Air Distribution and Filtering - VIN Range: N52048->N99999 (303-12A Intake Air Distribution and Filtering - 2.5L NA V6 - AJV6/3.0L NA V6 - AJ27, Diagnosis and Testing).<br>or<br>REFER to: Intake Air Distribution and Filtering - VIN Range: N52048->N99999 (303-12B Intake Air Distribution and Filtering - V8 4.2L Petrol/V8 S/C 4.2L Petrol, Diagnosis and Testing).<br>For MAF and APP sensor tests,<br>REFER to: Electronic Engine Controls - VIN Range: N80181->R99999 (303-14A Electronic Engine Controls - 2.5L NA V6 - AJV6/3.0L NA V6 - AJ27, Diagnosis and Testing).<br>or<br>REFER to: Electronic Engine Controls - VIN Range: N80181->R99999 (303-14B Electronic Engine Controls - V8 4.2L Petrol/V8 S/C 4.2L Petrol, Diagnosis and Testing).<br>Check for DTCs indicating a faulty HO2 sensor. Refer to the DTC index. For ignition system,<br>REFER to: Engine Ignition - VIN Range: N52048->N99999 (303-07A Engine Ignition - 2.5L NA V6 - AJV6/3.0L NA V6 - AJ27, Diagnosis and Testing).<br>or<br>REFER to: Engine Ignition - VIN Range: N52048->N99999 (303-07B Engine Ignition - V8 4.2L Petrol/V8 S/C 4.2L Petrol, Diagnosis and Testing).<br>Check DTCs for VCT range/performance fault. For VCT information,<br>REFER to: Engine - V8 4.2L Petrol/V8 S/C 4.2L Petrol/2.5L NA V6 - AJV6/3.0L NA V6 - AJ27 (303-00 Engine System - General Information, Diagnosis and Testing). |
| Engine surges | • Fuel pump<br>• Fuel lines<br>• MAF sensor<br>• Harness<br>• TP sensors<br>• Throttle motor<br>• Ignition system | For fuel pressure test, GO to Pinpoint Test E. For fuel line tests, GO to Pinpoint Test F. For MAF sensor, TP sensor, and throttle motor relay tests,<br>REFER to: Electronic Engine Controls - VIN Range: N80181->R99999 (303-14A Electronic Engine Controls - 2.5L NA V6 - AJV6/3.0L NA V6 - AJ27, Diagnosis and Testing).<br>or<br>REFER to: Electronic Engine Controls - VIN Range: |

GETtheMANUALS.org

| Symptom | Possible source | Action |
|---|---|---|
| | | N80181->R99999 (303-14B Electronic Engine Controls - V8 4.2L Petrol/V8 S/C 4.2L Petrol, Diagnosis and Testing).<br>For ignition system,<br>REFER to: Engine Ignition - VIN Range: N52048->N99999 (303-07A Engine Ignition - 2.5L NA V6 - AJV6/3.0L NA V6 - AJ27, Diagnosis and Testing).<br>or<br>REFER to: Engine Ignition - VIN Range: N52048->N99999 (303-07B Engine Ignition - V8 4.2L Petrol/V8 S/C 4.2L Petrol, Diagnosis and Testing). |
| Engine detonates/knocks | • Knock sensor (KS)/circuit malfunction<br>• Fuel pump<br>• Fuel lines<br>• FRP sensor<br>• MAF sensor<br>• HO2 sensors<br>• Air leakage<br>• Sticking VCT hub<br>• BARO sensor malfunction (internal ECM fault) | For KS circuit tests,<br>REFER to: Electronic Engine Controls - VIN Range: N80181->R99999 (303-14A Electronic Engine Controls - 2.5L NA V6 - AJV6/3.0L NA V6 - AJ27, Diagnosis and Testing).<br>or<br>REFER to: Electronic Engine Controls - VIN Range: N80181->R99999 (303-14B Electronic Engine Controls - V8 4.2L Petrol/V8 S/C 4.2L Petrol, Diagnosis and Testing).<br>For fuel pressure test, GO to Pinpoint Test E. For fuel line tests, GO to Pinpoint Test F. For MAF, FRP sensor and HO2 sensor tests,<br>REFER to: Electronic Engine Controls - VIN Range: N80181->R99999 (303-14A Electronic Engine Controls - 2.5L NA V6 - AJV6/3.0L NA V6 - AJ27, Diagnosis and Testing).<br>or<br>REFER to: Electronic Engine Controls - VIN Range: N80181->R99999 (303-14B Electronic Engine Controls - V8 4.2L Petrol/V8 S/C 4.2L Petrol, Diagnosis and Testing).<br>For intake system,<br>REFER to: Intake Air Distribution and Filtering - VIN Range: N52048->N99999 (303-12A Intake Air Distribution and Filtering - 2.5L NA V6 - AJV6/3.0L NA V6 - AJ27, Diagnosis and Testing).<br>or<br>REFER to: Intake Air Distribution and Filtering - VIN Range: N52048->N99999 (303-12B Intake Air Distribution and Filtering - V8 4.2L Petrol/V8 S/C 4.2L Petrol, Diagnosis and Testing).<br>Check DTCs for VCT range/performance fault. For VCT information,<br>REFER to: Engine - V8 4.2L Petrol/V8 S/C 4.2L Petrol/2.5L NA V6 - AJV6/3.0L NA V6 - AJ27 (303-00 Engine System - General Information, Diagnosis and Testing).<br>Refer to the warranty policy and procedures manual if an ECM is suspect. |

## DTC index

• NOTE: Generic scan tools may not read the codes listed, or may read only 5-digit codes. Match the 5 digits from the scan tool to the first 5 digits of the 7-digit code listed to identify the fault (the last 2 digits give extra information read by the manufacturer-approved diagnostic system).

• NOTE: For a full list of DTCs,
REFER to: Electronic Engine Controls - VIN Range: N80181->R99999 (303-14A Electronic Engine Controls - 2.5L NA V6 - AJV6/3.0L NA V6 - AJ27, Diagnosis and Testing).
or
REFER to: Electronic Engine Controls - VIN Range: N80181->R99999 (303-14B Electronic Engine Controls - V8 4.2L Petrol/V8 S/C 4.2L Petrol, Diagnosis and Testing).

| DTC | Description | Possible source | Action |
|---|---|---|---|
| P008700 | Fuel rail/system pressure - too low | • Fuel rail pressure (FRP) sensor disconnected<br>• FRP sensor to ECM sensing circuit: short circuit to ground<br>• FRP sensor supply circuit: high resistance<br>• FRP sensor failure<br>• Fuel pump failure<br>• Fuel line leak<br>• Restricted fuel line | For FRP sensor tests,<br>REFER to: Electronic Engine Controls - VIN Range: N80181->R99999 (303-14A Electronic Engine Controls - 2.5L NA V6 - AJV6/3.0L NA V6 - AJ27, Diagnosis and Testing).<br>or<br>REFER to: Electronic Engine Controls - VIN Range: N80181->R99999 (303-14B Electronic Engine Controls - V8 4.2L Petrol/V8 S/C 4.2L Petrol, Diagnosis and Testing).<br>For fuel line tests, GO to Pinpoint Test F. For fuel pressure tests, GO to Pinpoint Test E. |
| P008800 | Fuel rail/system pressure - too high | • FRP sensor to ECM wiring (supply/sense): short circuit to each other<br>• FRP sensor to ECM sense circuit: short circuit to power<br>• FRP sensor ground circuit: high resistance<br>• FRP sensor failure<br>• Restricted fuel line<br>• Fuel pump short circuit to battery | For FRP sensor tests,<br>REFER to: Electronic Engine Controls - VIN Range: N80181->R99999 (303-14A Electronic Engine Controls - 2.5L NA V6 - AJV6/3.0L NA V6 - AJ27, Diagnosis and Testing).<br>or<br>REFER to: Electronic Engine Controls - VIN Range: N80181->R99999 (303-14B Electronic Engine Controls - V8 4.2L Petrol/V8 S/C 4.2L Petrol, Diagnosis and Testing).<br>For fuel line tests, GO to Pinpoint Test F. |
| P017100 | System too lean (right hand bank) | • Air intake leak between MAF sensor and cylinder head<br>• Fuel filter/system restriction<br>• Fuel injector restriction<br>• MAF sensor fault (low intake air flow)<br>• Exhaust leak (before catalyst) | For intake system information,<br>REFER to: Intake Air Distribution and Filtering - VIN Range: N52048->N99999 (303-12A Intake Air Distribution and Filtering - 2.5L NA V6 - AJV6/3.0L NA V6 - AJ27, Diagnosis and Testing).<br>or<br>REFER to: Intake Air Distribution and Filtering - VIN Range: N52048->N99999 (303-12B Intake Air Distribution and Filtering - V8 4.2L Petrol/V8 S/C 4.2L Petrol, Diagnosis and Testing). |

GETtheMANUALS.org

| DTC | Description | Possible source | Action |
|---|---|---|---|
| | | | For fuel line tests, GO to Pinpoint Test F. For fuel pressure tests, GO to Pinpoint Test E. For fuel injector tests,<br>REFER to: Fuel Charging and Controls - VIN Range: N52048->N99999 (303-04A Fuel Charging and Controls - 2.5L NA V6 - AJV6/3.0L NA V6 - AJ27, Diagnosis and Testing).<br>or<br>REFER to: Fuel Charging and Controls - VIN Range: N52048->N99999 (303-04B Fuel Charging and Controls - V8 4.2L Petrol/V8 S/C 4.2L Petrol, Diagnosis and Testing).<br>For MAF sensor circuit tests,<br>REFER to: Electronic Engine Controls - VIN Range: N80181->R99999 (303-14A Electronic Engine Controls - 2.5L NA V6 - AJV6/3.0L NA V6 - AJ27, Diagnosis and Testing).<br>or<br>REFER to: Electronic Engine Controls - VIN Range: N80181->R99999 (303-14B Electronic Engine Controls - V8 4.2L Petrol/V8 S/C 4.2L Petrol, Diagnosis and Testing).<br>Check the exhaust system (before catalyst) for condition and security,<br>REFER to: Exhaust System - VIN Range: N13089->N99999 (309-00 Exhaust System, Diagnosis and Testing). |
| P0017400 | System too lean (left hand bank) | • Air intake leak between MAF sensor and cylinder head<br>• Fuel filter/system restriction<br>• Fuel injector restriction<br>• MAF sensor fault (low intake air flow)<br>• Exhaust leak (before catalyst) | For intake system information,<br>REFER to: Intake Air Distribution and Filtering - VIN Range: N52048->N99999 (303-12A Intake Air Distribution and Filtering - 2.5L NA V6 - AJV6/3.0L NA V6 - AJ27, Diagnosis and Testing).<br>or<br>REFER to: Intake Air Distribution and Filtering - VIN Range: N52048->N99999 (303-12B Intake Air Distribution and Filtering - V8 4.2L Petrol/V8 S/C 4.2L Petrol, Diagnosis and Testing).<br>For fuel line tests, GO to Pinpoint Test F. For fuel pressure tests, GO to Pinpoint Test E. For fuel injector tests,<br>REFER to: Fuel Charging and Controls - VIN Range: N52048->N99999 (303-04A Fuel Charging and Controls - 2.5L NA V6 - AJV6/3.0L NA V6 - AJ27, Diagnosis and Testing).<br>or<br>REFER to: Fuel Charging and Controls - VIN Range: N52048->N99999 (303-04B Fuel Charging and Controls - V8 4.2L Petrol/V8 S/C 4.2L Petrol, Diagnosis and Testing).<br>For MAF sensor circuit tests,<br>REFER to: Electronic Engine Controls - VIN Range: N80181->R99999 (303-14A Electronic Engine Controls - 2.5L NA V6 - AJV6/3.0L NA V6 - AJ27, Diagnosis and Testing).<br>or<br>REFER to: Electronic Engine Controls - VIN Range: N80181->R99999 (303-14B Electronic Engine Controls - V8 4.2L Petrol/V8 S/C 4.2L Petrol, Diagnosis and Testing).<br>Check the exhaust system (before catalyst) for condition and security,<br>REFER to: Exhaust System - VIN Range: N13089->N99999 (309-00 Exhaust System, Diagnosis and Testing). |
| P030000 | Random/multiple cylinder misfire detected | • ECM to ignition coil primary circuit faults (cylinder misfire detected DTCs also logged)<br>• Ignition coil failure<br>• Spark plug failure/fouled/incorrect gap<br>• Fuel delivery pressure (low/high)<br>• Fuel injector circuit fault(s) (injector DTCs also logged)<br>• Fuel injectors restricted/leaking<br>• Fuel injectors continuously open<br>• Fuel contamination<br>• Cylinder compression low<br>• Worn camshaft/broken valve springs<br>• Valve clearance adjustment | For ignition coil and spark plug tests,<br>REFER to: Engine Ignition - VIN Range: N52048->N99999 (303-07A Engine Ignition - 2.5L NA V6 - AJV6/3.0L NA V6 - AJ27, Diagnosis and Testing).<br>or<br>REFER to: Engine Ignition - VIN Range: N52048->N99999 (303-07B Engine Ignition - V8 4.2L Petrol/V8 S/C 4.2L Petrol, Diagnosis and Testing).<br>For fuel pressure test, GO to Pinpoint Test E. For fuel injector circuit tests,<br>REFER to: Fuel Charging and Controls - VIN Range: N52048->N99999 (303-04A Fuel Charging and Controls - 2.5L NA V6 - AJV6/3.0L NA V6 - AJ27, Diagnosis and Testing).<br>or<br>REFER to: Fuel Charging and Controls - VIN Range: N52048->N99999 (303-04B Fuel Charging and Controls - V8 4.2L Petrol/V8 S/C 4.2L Petrol, Diagnosis and Testing).<br>Check compressions, valve gear, etc,<br>REFER to: Engine - V8 4.2L Petrol/V8 S/C 4.2L Petrol/2.5L NA V6 - AJV6/3.0L NA V6 - AJ27 (303-00 Engine System - General Information, Diagnosis and Testing). |

GETtheMANUALS.org

| DTC | Description | Possible source | Action |
|---|---|---|---|
| P046129 | Fuel level sensor A circuit range/performance - signal invalid | • Fuel level sensor to rear electronic module (REM) circuits; intermittent short circuit, high resistance<br>• Fuel level sensor failure<br>• REM fault (incorrect fuel level data) | For fuel level sensor tests, GO to Pinpoint Test B. |
| P04612F | Fuel level sensor A circuit range/performance - signal erratic | • Fuel level sensor to rear electronic module (REM) circuits; intermittent short circuit, high resistance<br>• Fuel level sensor failure<br>• REM fault (incorrect fuel level data) | For fuel level sensor tests, GO to Pinpoint Test B. |
| P046200 | Fuel level sensor A circuit low input | • Fuel level sensor to rear electronic module (REM) circuits; intermittent short circuit to ground or high resistance<br>• Fuel level sensor failure<br>• REM fault (incorrect fuel level data) | For fuel level sensor tests, GO to Pinpoint Test B. |
| P046300 | Fuel level sensor A circuit high input | • Fuel level sensor to rear electronic module (REM) circuits; intermittent short circuit to power<br>• Fuel level sensor failure<br>• REM fault (incorrect fuel level data) | For fuel level sensor tests, GO to Pinpoint Test B. |
| P062700 | Fuel pump A control circuit/open | • Invalid fuel pump duty requested by ECM | Refer to the warranty policy and procedures manual if an ECM is suspect. |
| P062A00 | Fuel pump driver module (FPDM) control circuit range/performance (vehicles with supercharger only) | • ECM to FPDM control drive circuits; intermittent short circuit, high resistance<br>• FPDM failure<br>• Rear electronic module (REM) failure | For REM power and ground tests, GO to Pinpoint Test A. For ECM to FPDM circuit tests, GO to Pinpoint Test D. |
| P263500 | Fuel pump A low flow/performance (fuel pump not activated when requested by ECM) | • ECM to rear electronic module (REM) drive circuit: short circuit, high resistance<br>• Fuel pump failure<br>• REM failure | For REM power and ground tests, GO to Pinpoint Test A. For ECM to REM circuit tests, GO to Pinpoint Test C. Check the fuel pressure. GO to Pinpoint Test E. |

## Pinpoint tests

CAUTION: When probing connectors to take measurements in the course of the pinpoint tests, use the adaptor kit, part number 3548-1358-00.

• NOTE: When performing electrical voltage or resistance tests, always use a digital multimeter (DMM) accurate to 3 decimal places, and with an up-to-date calibration certificate. When testing resistance, always take the resistance of the DMM leads into account.

• NOTE: Check and rectify basic faults before beginning diagnostic routines involving pinpoint tests.

**PINPOINT TEST A : REM POWER AND GROUND CIRCUITS**

| TEST CONDITIONS | DETAILS/RESULTS/ACTIONS |
|---|---|
| **A1: CHECK THE IGNITION POWER SUPPLY TO THE REM** | |
| | 1 Key off.<br>2 Disconnect the REM electrical connector, CA100.<br>3 Key on, engine off.<br>4 Measure the voltage between:<br>**REM connector CA100, harness side** — **Battery**<br>Pin 08 — Negative terminal |
| | Is the voltage less than 10 volts?<br>**Yes**<br>REPAIR the circuit between the battery and the REM. This circuit includes splice CAS31, the inertia switch and fuse 4 of the primary junction box. For additional information, refer to the wiring diagrams. CLEAR the DTC, test the system for normal operation.<br>**No**<br>GO to A2. |
| **A2: CHECK THE POWER SUPPLY VOLTAGE TO THE REM** | |
| | 1 Key off.<br>2 Disconnect the REM electrical connector, CA100.<br>3 Measure the voltage between:<br>**REM connector CA101, harness side** — **Battery**<br>Pin 01 — Negative terminal |
| | Is the voltage less than 10 volts?<br>**Yes**<br>REPAIR the circuit between the battery and the REM. This circuit includes fuse 47 of the rear power distribution box and the fuel pump relay. For additional information, refer to the wiring diagrams. CLEAR the DTC, test the system for normal operation.<br>**No**<br>GO to A3. |
| **A3: CHECK THE GROUND TO THE REM** | |
| | 1 Key off.<br>2 Measure the resistance between:<br>**REM connector CA101, harness side** — **Battery**<br>pin 02 — Negative terminal |

GETtheMANUALS.org

| | |
|---|---|
| | Is the resistance greater than 5 ohms?<br>**Yes**<br>REPAIR the high resistance circuit. For additional information, refer to the wiring diagrams. CLEAR the DTC, test the system for normal operation.<br>**No**<br>CHECK for DTCs. REFER to the DTC index. |

## PINPOINT TEST B : FUEL LEVEL SENSOR(S) CIRCUIT RANGE/PERFORMANCE

| TEST CONDITIONS | DETAILS/RESULTS/ACTIONS |
|---|---|
| **B1: CHECK THE SIGNAL CIRCUIT BETWEEN THE REM AND LEVEL SENSOR A FOR SHORT CIRCUIT TO GROUND** | |
| | 1 Disconnect the fuel pump module electrical connector, FP16. |
| | 2 Measure the resistance between: |
| | **Fuel module connector FP16, harness side** / **Battery**<br>Pin 02 / Negative terminal |
| | Is the resistance less than 10,000 ohms?<br>**Yes**<br>REPAIR the short circuit. For additional information, refer to the wiring diagrams. CLEAR the DTC, test the system for normal operation.<br>**No**<br>GO to B2. |
| **B2: CHECK THE SIGNAL CIRCUIT BETWEEN THE REM AND LEVEL SENSOR A FOR SHORT CIRCUIT TO POWER** | |
| | 1 Measure the resistance between: |
| | **Fuel module connector FP16, harness side** / **Battery**<br>Pin 02 / Positive terminal |
| | Is the resistance less than 10,000 ohms?<br>**Yes**<br>REPAIR the short circuit. For additional information, refer to the wiring diagrams. CLEAR the DTC, test the system for normal operation.<br>**No**<br>GO to B3. |
| **B3: CHECK THE SIGNAL CIRCUIT BETWEEN THE REM AND LEVEL SENSOR B FOR SHORT CIRCUIT TO GROUND** | |
| | 1 Measure the resistance between: |
| | **Fuel module connector FP16, harness side** / **Battery**<br>Pin 06 / Negative terminal |
| | Is the resistance less than 10,000 ohms?<br>**Yes**<br>REPAIR the short circuit. For additional information, refer to the wiring diagrams. CLEAR the DTC, test the system for normal operation.<br>**No**<br>GO to B4. |
| **B4: CHECK THE SIGNAL CIRCUIT BETWEEN THE REM AND LEVEL SENSOR B FOR SHORT CIRCUIT TO POWER** | |
| | 1 Measure the resistance between: |
| | **Fuel module connector FP16, harness side** / **Battery**<br>Pin 06 / Positive terminal |
| | Is the resistance less than 10,000 ohms?<br>**Yes**<br>REPAIR the short circuit. For additional information, refer to the wiring diagrams. CLEAR the DTC, test the system for normal operation.<br>**No**<br>GO to B5. |
| **B5: CHECK THE LEVEL SENSOR GROUND CIRCUIT BETWEEN THE REM AND LEVEL SENSORS FOR SHORT CIRCUIT TO GROUND** | |
| | 1 Measure the resistance between: |
| | **Fuel module connector FP16, harness side** / **Battery**<br>Pin 01 / Negative terminal |
| | 2 Measure the resistance between: |
| | **Fuel module connector FP16, harness side** / **Battery**<br>Pin 05 / Negative terminal |
| | Is either resistance less than 10,000 ohms?<br>**Yes**<br>REPAIR the short circuit. For additional information, refer to the wiring diagrams. CLEAR the DTC, test the system for normal operation.<br>**No**<br>GO to B6. |
| **B6: CHECK THE LEVEL SENSOR GROUND CIRCUIT BETWEEN THE REM AND LEVEL SENSORS FOR SHORT CIRCUIT TO POWER** | |
| | 1 Measure the resistance between: |
| | **Fuel module connector FP16, harness side** / **Battery**<br>Pin 01 / Positive terminal |
| | 2 Measure the resistance between: |
| | **Fuel module connector FP16, harness side** / **Battery**<br>Pin 05 / Negative terminal |
| | Is either resistance less than 10,000 ohms?<br>**Yes**<br>REPAIR the short circuit. For additional information, refer to the wiring diagrams. CLEAR the DTC, test the system for normal operation.<br>**No**<br>GO to B7. |
| **B7: CHECK THE SENSOR A RESISTANCE EMPTY** | |
| | 1 Remove the right-hand fuel pump module.<br>REFER to: Fuel Pump Module - V8 4.2L Petrol/V8 S/C 4.2L Petrol/2.5L NA V6 - AJV6/3.0L NA V6 - AJ27, VIN Range: N52048->N99999 (310-01 Fuel Tank and Lines, Removal and Installation). |
| | 2 Move the sensor float to it's lowest position. |
| | 3 Measure the resistance between: |
| | **Fuel module connector FP16, component side** / **Fuel module connector FP16, component side**<br>Pin 02 / Pin 01 |

GETtheMANUALS.org

Is the resistance 15 ohms?

**Yes**

GO to B8.

**No**

INSTALL a new level sensor,
REFER to: Fuel Level Sender RH - V8 4.2L Petrol/V8 S/C 4.2L Petrol/2.5L NA V6 - AJV6/3.0L NA V6 - AJ27, VIN Range: N52048->N99999 (310-01 Fuel Tank and Lines, Removal and Installation).
CLEAR the DTC, test the system for normal operation.

**B8: CHECK THE SENSOR A RESISTANCE FULL**

1. Move the sensor float to it's highest position.
2. Measure the resistance between:

| Fuel module connector FP16, component side | Fuel module connector FP16, component side |
|---|---|
| Pin 02 | Pin 01 |

Is the resistance 160 ohms?

**Yes**

GO to B9.

**No**

INSTALL a new level sensor,
REFER to: Fuel Level Sender RH - V8 4.2L Petrol/V8 S/C 4.2L Petrol/2.5L NA V6 - AJV6/3.0L NA V6 - AJ27, VIN Range: N52048->N99999 (310-01 Fuel Tank and Lines, Removal and Installation).
CLEAR the DTC, test the system for normal operation.

**B9: CHECK THE SENSOR B RESISTANCE EMPTY**

1. Remove the left-hand fuel pump module.
REFER to: Fuel Pump Module - V8 4.2L Petrol/V8 S/C 4.2L Petrol/2.5L NA V6 - AJV6/3.0L NA V6 - AJ27, VIN Range: N52048->N99999 (310-01 Fuel Tank and Lines, Removal and Installation).
2. Move the sensor float to it's lowest position.
3. Measure the resistance between:

| Fuel module connector FP16, component side | Fuel module connector FP16, component side |
|---|---|
| Pin 06 | Pin 05 |

Is the resistance 15 ohms?

**Yes**

GO to B10.

**No**

INSTALL a new level sensor,
REFER to: Fuel Level Sender LH - V8 4.2L Petrol/V8 S/C 4.2L Petrol/2.5L NA V6 - AJV6/3.0L NA V6 - AJ27, VIN Range: N52048->N99999 (310-01 Fuel Tank and Lines, Removal and Installation).
CLEAR the DTC, test the system for normal operation.

**B10: CHECK THE SENSOR B RESISTANCE FULL**

1. Move the sensor float to it's highest position.
2. Measure the resistance between:

| Fuel module connector FP16, component side | Fuel module connector FP16, component side |
|---|---|
| Pin 06 | Pin 05 |

Is the resistance 160 ohms?

**Yes**

GO to B13.

**No**

INSTALL a new level sensor,
REFER to: Fuel Level Sender LH - V8 4.2L Petrol/V8 S/C 4.2L Petrol/2.5L NA V6 - AJV6/3.0L NA V6 - AJ27, VIN Range: N52048->N99999 (310-01 Fuel Tank and Lines, Removal and Installation).
CLEAR the DTC, test the system for normal operation.

**B11: CHECK THE SENSOR B RESISTANCE EMPTY**

1. Remove the left-hand fuel pump module.
REFER to: Fuel Pump Module - V8 4.2L Petrol/V8 S/C 4.2L Petrol/2.5L NA V6 - AJV6/3.0L NA V6 - AJ27, VIN Range: N52048->N99999 (310-01 Fuel Tank and Lines, Removal and Installation).
2. Move the sensor float to it's lowest position.
3. Measure the resistance between:

| Fuel module connector FP16, component side | Fuel module connector FP16, component side |
|---|---|
| Pin 06 | Pin 05 |

Is the resistance 15 ohms?

**Yes**

GO to B12.

**No**

INSTALL a new level sensor,
REFER to: Fuel Level Sender LH - V8 4.2L Petrol/V8 S/C 4.2L Petrol/2.5L NA V6 - AJV6/3.0L NA V6 - AJ27, VIN Range: N52048->N99999 (310-01 Fuel Tank and Lines, Removal and Installation).
CLEAR the DTC, test the system for normal operation.

**B12: CHECK THE SENSOR B RESISTANCE FULL**

1. Move the sensor float to it's highest position.
2. Measure the resistance between:

| Fuel module connector FP16, component side | Fuel module connector FP16, component side |
|---|---|
| Pin 06 | Pin 05 |

Is the resistance 160 ohms?

**Yes**

GO to B13.

**No**

INSTALL a new level sensor,
REFER to: Fuel Level Sender LH - V8 4.2L Petrol/V8 S/C 4.2L Petrol/2.5L NA V6 - AJV6/3.0L NA V6 - AJ27, VIN Range: N52048->N99999 (310-01 Fuel Tank and Lines, Removal and Installation).
CLEAR the DTC, test the system for normal operation.

**B13: CHECK THE SIGNAL CIRCUIT BETWEEN THE REM AND LEVEL SENSOR A FOR HIGH RESISTANCE**

1. Disconnect the REM electrical connector, CA101.
2. Measure the resistance between:

| REM connector CA101, harness side | Fuel module connector FP16, harness side |
|---|---|
| Pin 15 | Pin 02 |

GETtheMANUALS.org

Is the resistance greater than 5 ohms?

**Yes**

REPAIR the high resistance circuit. For additional information, refer to the wiring diagrams. CLEAR the DTC, test the system for normal operation.

**No**

GO to B14.

**B14: CHECK THE SIGNAL CIRCUIT BETWEEN THE REM AND LEVEL SENSOR B FOR HIGH RESISTANCE**

1 Measure the resistance between:

| REM connector CA101, harness side | Fuel module connector FP16, harness side |
|---|---|
| Pin 16 | Pin 06 |

Is the resistance greater than 5 ohms?

**Yes**

REPAIR the high resistance circuit. For additional information, refer to the wiring diagrams. CLEAR the DTC, test the system for normal operation.

**No**

GO to B15.

**B15: CHECK THE LEVEL SENSOR GROUND CIRCUIT BETWEEN THE REM AND LEVEL SENSORS FOR HIGH RESISTANCE**

1 Disconnect the REM electrical connector, CA103.

2 Measure the resistance between:

| REM connector CA103, harness side | Fuel module connector FP16, harness side |
|---|---|
| Pin 23 | Pin 01 |

3 Measure the resistance between:

| REM connector CA103, harness side | Fuel module connector FP16, harness side |
|---|---|
| Pin 23 | Pin 05 |

Is either resistance greater than 5 ohms?

**Yes**

REPAIR the high resistance circuit. For additional information, refer to the wiring diagrams. CLEAR the DTC, test the system for normal operation.

**No**

CHECK for DTCs. REFER to the DTC index.

## PINPOINT TEST C : ECM TO REM DRIVE CIRCUIT

| TEST CONDITIONS | DETAILS/RESULTS/ACTIONS |
|---|---|

**C1: CHECK THE ECM TO REM DRIVE CIRCUIT FOR SHORT CIRCUIT TO GROUND**

1 Disconnect the REM electrical connector, CA103.

2 Measure the resistance between:

| REM connector CA103, harness side | Battery |
|---|---|
| Pin 19 | Negative terminal |

Is the resistance less than 10,000 ohms?

**Yes**

REPAIR the short circuit. For additional information, refer to the wiring diagrams. CLEAR the DTC, test the system for normal operation.

**No**

GO to C2.

**C2: CHECK THE ECM TO REM DRIVE CIRCUIT FOR SHORT CIRCUIT TO POWER**

1 Measure the resistance between:

| REM connector CA103, harness side | Battery |
|---|---|
| Pin 19 | Positive terminal |

Is the resistance less than 10,000 ohms?

**Yes**

REPAIR the short circuit. For additional information, refer to the wiring diagrams. CLEAR the DTC, test the system for normal operation.

**No**

GO to C3.

**C3: CHECK THE ECM TO REM DRIVE CIRCUIT FOR HIGH RESISTANCE**

1 Disconnect the ECM electrical connector, FH300.

2 Measure the resistance between:

| REM connector CA103, harness side | ECM connector FH300, harness side |
|---|---|
| Pin 19 | Pin 20 |

Is the resistance greater than 5 ohms?

**Yes**

REPAIR the high resistance circuit. For additional information, refer to the wiring diagrams. CLEAR the DTC, test the system for normal operation.

**No**

CHECK for DTCs indicating a REM or ECM fault. REFER to the DTC index.
REFER to: Electronic Engine Controls - VIN Range: N80181->R99999 (303-14A Electronic Engine Controls - 2.5L NA V6 - AJV6/3.0L NA V6 - AJ27, Diagnosis and Testing).
For vehicles with 3.0L engines and
REFER to: Electronic Engine Controls - VIN Range: N80181->R99999 (303-14B Electronic Engine Controls - V8 4.2L Petrol/V8 S/C 4.2L Petrol, Diagnosis and Testing).
For vehicles with 3.5L and 4.2L engines.

## PINPOINT TEST D : FUEL PUMP DRIVE CIRCUITS (VEHICLES WITH SUPERCHARGER)

| TEST CONDITIONS | DETAILS/RESULTS/ACTIONS |
|---|---|

**D1: CHECK THE IGNITION POWER SUPPLY TO THE FPDM**

1 Key off.

2 Disconnect the FPDM electrical connector, FP15.

3 Key on, engine off.

4 Measure the voltage between:

| FPDM connector FP15, harness side | Battery |
|---|---|
| pin 05 | Negative terminal |

GETtheMANUALS.org

Is the voltage less than 10 volts?

**Yes**

REPAIR the circuit between the battery and the FPDM. This circuit includes fuse 49 of the rear power distribution box. For additional information, refer to the wiring diagrams. CLEAR the DTC, test the system for normal operation.

**No**

GO to D2.

**D2: CHECK THE GROUND TO THE FPDM**

1 Key off.

2 Measure the resistance between:

| FPDM connector FP15, harness side | Battery |
|---|---|
| pin 06 | Negative terminal |

Is the resistance greater than 5 ohms?

**Yes**

REPAIR the high resistance circuit. For additional information, refer to the wiring diagrams. CLEAR the DTC, test the system for normal operation.

**No**

GO to D3.

**D3: CHECK THE FPDM TO FUEL PUMP NEGATIVE CIRCUIT FOR SHORT CIRCUIT TO GROUND**

1 Measure the resistance between:

| Fuel pump module connector FP15, harness side | Battery |
|---|---|
| Pin 02 | Negative terminal |

Is the resistance less than 10,000 ohms?

**Yes**

REPAIR the short circuit. For additional information, refer to the wiring diagrams. CLEAR the DTC, test the system for normal operation.

**No**

GO to D4.

**D4: CHECK THE FPDM TO FUEL PUMP NEGATIVE CIRCUIT FOR SHORT CIRCUIT TO POWER**

1 Measure the resistance between:

| Fuel pump module connector FP15, harness side | Battery |
|---|---|
| Pin 02 | Positive terminal |

Is the resistance less than 10,000 ohms?

**Yes**

REPAIR the short circuit. For additional information, refer to the wiring diagrams. CLEAR the DTC, test the system for normal operation.

**No**

GO to D5.

**D5: CHECK THE FPDM TO FUEL PUMP POSITIVE CIRCUIT FOR SHORT CIRCUIT TO GROUND**

1 Measure the resistance between:

| Fuel pump module connector FP15, harness side | Battery |
|---|---|
| Pin 01 | Negative terminal |

Is the resistance less than 10,000 ohms?

**Yes**

REPAIR the short circuit. For additional information, refer to the wiring diagrams. CLEAR the DTC, test the system for normal operation.

**No**

GO to D6.

**D6: CHECK THE FPDM TO FUEL PUMP POSITIVE CIRCUIT FOR SHORT CIRCUIT TO POWER**

1 Measure the resistance between:

| Fuel pump module connector FP15, harness side | Battery |
|---|---|
| Pin 01 | Positive terminal |

Is the resistance less than 10,000 ohms?

**Yes**

REPAIR the short circuit. For additional information, refer to the wiring diagrams. CLEAR the DTC, test the system for normal operation.

**No**

GO to D7.

**D7: CHECK THE FPDM TO FUEL PUMP NEGATIVE CIRCUIT FOR HIGH RESISTANCE**

1 Disconnect the fuel pump module electrical connector, FP16.

2 Measure the resistance between:

| FPDM connector FP15, harness side | Fuel module connector FP16, harness side |
|---|---|
| Pin 02 | Pin 03 |

Is the resistance greater than 5 ohms?

**Yes**

REPAIR the high resistance circuit. For additional information, refer to the wiring diagrams. CLEAR the DTC, test the system for normal operation.

**No**

GO to D8.

**D8: CHECK THE FPDM TO FUEL PUMP POSITIVE CIRCUIT FOR HIGH RESISTANCE**

1 Measure the resistance between:

| FPDM connector FP15, harness side | Fuel module connector FP16, harness side |
|---|---|
| Pin 01 | Pin 04 |

Is the resistance greater than 5 ohms?

**Yes**

REPAIR the high resistance circuit. For additional information, refer to the wiring diagrams. CLEAR the DTC, test the system for normal operation.

**No**

CHECK for DTCs indicating a module fault. REFER to the DTC index.

REFER to: Electronic Engine Controls - VIN Range: N80181->R99999 (303-14A Electronic Engine Controls - 2.5L NA V6 - AJV6/3.0L NA V6 - AJ27, Diagnosis and Testing).

For vehicles with 3.0L engines and

REFER to: Electronic Engine Controls - VIN Range: N80181->R99999 (303-14B Electronic Engine Controls - V8 4.2L Petrol/V8 S/C 4.2L Petrol, Diagnosis and Testing).

For vehicles with 3.5L and 4.2L engines.

GETtheMANUALS.org

**PINPOINT TEST E : CHECK THE FUEL SYSTEM PRESSURE**

| TEST CONDITIONS | DETAILS/RESULTS/ACTIONS |
|---|---|
| **E1: CHECK THE PUMP ACTIVITY** | |
| | 1 Remove the rear seat cushion.<br>REFER to: Rear Seat Cushion (501-10 Seating, Removal and Installation). |
| | 2 Key on, engine off. |
| | 3 Make sure the fuel pump relay is energized. |
| | 4 Listen for pump noise. |
| | Can the fuel pump be heard running?<br>**Yes**<br>GO to E2.<br>**No**<br>CHECK for DTCs. REFER to the DTC index. |
| **E2: CHECK THE FUEL SYSTEM PRESSURE** | |
| | WARNING: This procedure involves fuel handling. Be prepared for fuel spillage at all times and always observe fuel handling precautions. Failure to follow these instructions may result in personal injury.<br><br>• NOTE: The fuel pressure can be tested using the Jaguar approved diagnostic system datalogger facility, or by the use of a suitable gauge from the schraeder connector on the special tool fitted to the fuel rail.<br>REFER to: Fuel System Pressure Check (310-00 Fuel System - General Information, General Procedures).<br><br>1 Apply the parking brake. |
| | 2 Make sure the gear selector is in the **NEUTRAL** position for vehicles fitted with manual transmission, **PARK** position for vehicles fitted with automatic transmission. |
| | 3 Connect a suitable gauge to the fuel Schraeder valve. |
| | 4 Disconnect and plug the vacuum hose from the pressure regulator. |
| | 5 Key on, engine off.<br>• Make sure there are no leaks from the gauge connections |
| | 6 Record the fuel pressure reading. |
| | Is the fuel pressure between 4 and 5 bar (58.01 and 72.51 lb/in²)?<br>**Yes**<br>GO to E3.<br>**No**<br>CHECK for DTCs. REFER to the DTC index. |
| **E3: CHECK THE FUEL SYSTEM PRESSURE WITH THE ENGINE CRANKING** | |
| | 1 Key in start position. |
| | 2 Record the fuel pressure reading. |
| | Is the fuel pressure between 4 and 5 bar (58.01 and 72.51 lb/in²)?<br>**Yes**<br>GO to E4.<br>**No**<br>CHECK for DTCs. REFER to the DTC index. |
| **E4: CHECK THE FUEL SYSTEM PRESSURE WITH THE ENGINE IDLING (WHERE POSSIBLE)** | |
| | 1 Key on, engine running. |
| | Is the fuel pressure between 4 and 5 bar (58.01 and 72.51 lb/in²)?<br>**Yes**<br>CHECK for DTCs and symptoms indicating another cause of the problem.<br>**No**<br>CHECK for DTCs. If there are no codes, suspect pump module failure.<br>REFER to: Fuel Pump Module - V8 4.2L Petrol/V8 S/C 4.2L Petrol/2.5L NA V6 - AJV6/3.0L NA V6 - AJ27, VIN Range: N52048->N99999 (310-01 Fuel Tank and Lines, Removal and Installation). |

## PINPOINT TEST F : CHECK THE FUEL LINES

| TEST CONDITIONS | DETAILS/RESULTS/ACTIONS |
|---|---|
| **F1: CHECK THE FUEL LINES FOR RESTRICTIONS** | |
| | WARNING: This procedure involves fuel handling. Be prepared for fuel spillage at all times and always observe fuel handling precautions. Failure to follow these instructions may result in personal injury.<br><br>1 Detach the fuel line from the fuel rail and from the fuel pump module. |
| | 2 Using an air line gently blow through the line checking for blockages or restrictions. |
| | Is a blockage or restriction evident?<br>**Yes**<br>CLEAR/REPAIR the blocked or restricted fuel line and test the system for normal operation.<br>**No**<br>GO to F2. |
| **F2: CHECK THE FUEL TANK LINES FOR RESTRICTIONS** | |
| | 1 Remove the fuel and transfer pump module locking rings.<br>REFER to: Fuel Pump Module - V8 4.2L Petrol/V8 S/C 4.2L Petrol/2.5L NA V6 - AJV6/3.0L NA V6 - AJ27, VIN Range: N52048->N99999 (310-01 Fuel Tank and Lines, Removal and Installation). |
| | 2 Detach the fuel lines from the transfer and fuel pump modules. |
| | 3 Using an air line gently blow through the line checking for blockages or restrictions. |
| | Is a blockage or restriction evident?<br>**Yes**<br>CLEAR/REPAIR the blocked or restricted fuel line and test the system for normal operation.<br>**No**<br>CHECK for DTCs and symptoms indicating another cause of the problem. |

GETtheMANUALS.org

# Fuel Tank and Lines - Fuel Tank and LinesV8 4.2L Petrol/V8 S/C 4.2L Petrol/2.5L NA V6 - AJV6/3.0L NA V6 - AJ27, VIN Range: N80181->R99999

Diagnosis and Testing

## Overview

There are changes to the engine management system (EMS) for 2006 my, the most obvious of which will be the change to 7-digit diagnostic trouble codes (DTCs) from the familiar 5-digit, and the change from two fuel pumps for vehicles with supercharger to a single pump.

For additional information on the description and operation of the fuel system.
REFER to: Fuel Tank and Lines - VIN Range: N52048->N99999 (310-01 Fuel Tank and Lines, Description and Operation).

## Inspection and Verification

1. **1.** Verify the customer concern.
2. **2.** Visually inspect for obvious signs of mechanical or electrical damage.

**Visual Inspection Chart**

| Mechanical | Electrical |
|---|---|
| • Fuel leaks<br>• Damaged fuel lines<br>• Damaged push connect fittings<br>• Fuel level<br>• Fuel contamination/grade/quality<br>• Damaged fuel tank filler pipe cap<br>• Damaged fuel tank filler pipe | • Fuses<br>• Inertia switch<br>• Loose or corroded electrical connectors<br>• Harnesses<br>• Fuel pump driver module (FPDM)<br>• Rear electronic module (REM)<br>• Fuel pump relay<br>• Engine control module (ECM) |

3. **3.** If an obvious cause for an observed or reported symptom is found, correct the cause (if possible) before proceeding to the next step.
4. **4.** If the cause is not visually evident use the Jaguar approved diagnostic system or a scan tool to retrieve the fault codes before proceeding to the diagnostic trouble code (DTC) Index.

## Symptom Chart

| Symptom | Possible source | Action |
|---|---|---|
| Engine cranks, but does not fire | • Engine breather system disconnected/restricted<br>• Ignition system<br>• Fuel system<br>• Harness<br>• Crankshaft position (CKP) sensor<br>• ECM fault | Check the engine breather system,<br>REFER to: Engine Emission Control - VIN Range: N80181->R99999 (303-08A Engine Emission Control - V8 4.2L Petrol/V8 S/C 4.2L Petrol/2.5L NA V6 - AJV6/3.0L NA V6 - AJ27, Diagnosis and Testing).<br>For ignition system,<br>REFER to: Engine Ignition - VIN Range: N52048->N99999 (303-07A Engine Ignition - 2.5L NA V6 - AJV6/3.0L NA V6 - AJ27, Diagnosis and Testing).<br>or<br>REFER to: Engine Ignition - VIN Range: N52048->N99999 (303-07B Engine Ignition - V8 4.2L Petrol/V8 S/C 4.2L Petrol, Diagnosis and Testing).<br>For fuel pressure test, GO to Pinpoint Test E. For CKP tests,<br>REFER to: Electronic Engine Controls - VIN Range: N80181->R99999 (303-14A Electronic Engine Controls - 2.5L NA V6 - AJV6/3.0L NA V6 - AJ27, Diagnosis and Testing).<br>or<br>REFER to: Electronic Engine Controls - VIN Range: N80181->R99999 (303-14B Electronic Engine Controls - V8 4.2L Petrol/V8 S/C 4.2L Petrol, Diagnosis and Testing).<br>Refer to the warranty policy and procedures manual if an ECM is suspect. |
| Engine cranks and fires, but will not start | • Evaporative emissions purge valve<br>• Fuel pump<br>• Spark plugs<br>• HT short to ground (tracking) check rubber boots for cracks/damage<br>• Ignition coil failure(s)<br>• Harness | REFER to: Evaporative Emissions - VIN Range: N52048->N99999 (303-13 Evaporative Emissions, Diagnosis and Testing).For purge valve tests, For fuel pressure test, GO to Pinpoint Test E.<br>For ignition system,<br>REFER to: Engine Ignition - VIN Range: N52048->N99999 (303-07A Engine Ignition - 2.5L NA V6 - AJV6/3.0L NA V6 - AJ27, Diagnosis and Testing).<br>or<br>REFER to: Engine Ignition - VIN Range: N52048->N99999 (303-07B Engine Ignition - V8 4.2L Petrol/V8 S/C 4.2L Petrol, Diagnosis and Testing). |
| Difficult to start cold | • Check coolant anti-freeze content<br>• Battery<br>• CKP sensor<br>• Exhaust gas recirculation (EGR) valve stuck open<br>• Fuel pump<br>• Evaporative emissions purge valve | Check engine coolant level and condition. For battery information,<br>REFER to: Battery (414-01 Battery, Mounting and Cables, Diagnosis and Testing).<br>For CKP sensor tests,<br>REFER to: Electronic Engine Controls - VIN Range: N80181->R99999 (303-14A Electronic Engine Controls - 2.5L NA V6 - AJV6/3.0L NA V6 - AJ27, Diagnosis and Testing).<br>or<br>REFER to: Electronic Engine Controls - VIN Range: N80181->R99999 (303-14B Electronic Engine Controls - V8 4.2L Petrol/V8 S/C 4.2L Petrol, Diagnosis and Testing).<br>For EGR system information,<br>REFER to: Engine Emission Control - VIN Range: N80181->R99999 (303-08A Engine Emission Control - V8 4.2L Petrol/V8 S/C 4.2L Petrol/2.5L NA V6 - AJV6/3.0L NA V6 - AJ27, |

GETtheMANUAL.com

| Symptom | Possible source | Action |
|---|---|---|
| | | Diagnosis and Testing).<br>For fuel pressure test, GO to Pinpoint Test E. For purge valve tests,<br>REFER to: Evaporative Emissions - VIN Range: N52048->N99999 (303-13 Evaporative Emissions, Diagnosis and Testing). |
| Difficult to start hot | • Injector leak<br>• Engine fuel temperature (EFT) sensor<br>• Intake air temperature (IAT) sensor<br>• Mass air flow (MAF) sensor<br>• Evaporative emissions purge valve<br>• Fuel pump<br>• Ignition system<br>• EGR valve stuck open | For fuel injector information,<br>REFER to: Fuel Injectors (303-04A Fuel Charging and Controls - 2.5L NA V6 - AJV6/3.0L NA V6 - AJ27, Removal and Installation).<br>or<br>REFER to: Fuel Injectors (303-04B Fuel Charging and Controls - V8 4.2L Petrol/V8 S/C 4.2L Petrol, Removal and Installation).<br>For EFT, IAT and MAF sensor tests,<br>REFER to: Electronic Engine Controls - VIN Range: N80181->R99999 (303-14A Electronic Engine Controls - 2.5L NA V6 - AJV6/3.0L NA V6 - AJ27, Diagnosis and Testing).<br>or<br>REFER to: Electronic Engine Controls - VIN Range: N80181->R99999 (303-14B Electronic Engine Controls - V8 4.2L Petrol/V8 S/C 4.2L Petrol, Diagnosis and Testing).<br>For purge valve tests,<br>REFER to: Evaporative Emissions - VIN Range: N52048->N99999 (303-13 Evaporative Emissions, Diagnosis and Testing).<br>For fuel pressure test, GO to Pinpoint Test E. For ignition system,<br>REFER to: Engine Ignition - VIN Range: N52048->N99999 (303-07A Engine Ignition - 2.5L NA V6 - AJV6/3.0L NA V6 - AJ27, Diagnosis and Testing).<br>or<br>REFER to: Engine Ignition - VIN Range: N52048->N99999 (303-07B Engine Ignition - V8 4.2L Petrol/V8 S/C 4.2L Petrol, Diagnosis and Testing).<br>For EGR tests,<br>REFER to: Engine Emission Control - VIN Range: N80181->R99999 (303-08A Engine Emission Control - V8 4.2L Petrol/V8 S/C 4.2L Petrol/2.5L NA V6 - AJV6/3.0L NA V6 - AJ27, Diagnosis and Testing). |
| Difficult to start after hot soak (vehicle standing after engine has reached operating temperature) | • Injector leak<br>• EFT sensor<br>• IAT sensor<br>• MAF sensor<br>• Evaporative emissions purge valve<br>• Fuel pump<br>• Ignition system<br>• EGR valve stuck open | For fuel injector tests,<br>REFER to: Fuel Charging and Controls - VIN Range: N52048->N99999 (303-04A Fuel Charging and Controls - 2.5L NA V6 - AJV6/3.0L NA V6 - AJ27, Diagnosis and Testing).<br>or<br>REFER to: Fuel Charging and Controls - VIN Range: N52048->N99999 (303-04B Fuel Charging and Controls - V8 4.2L Petrol/V8 S/C 4.2L Petrol, Diagnosis and Testing).<br>For fuel temperature sensor, IAT sensor and MAF sensor tests,<br>REFER to: Electronic Engine Controls - VIN Range: N80181->R99999 (303-14A Electronic Engine Controls - 2.5L NA V6 - AJV6/3.0L NA V6 - AJ27, Diagnosis and Testing).<br>or<br>REFER to: Electronic Engine Controls - VIN Range: N80181->R99999 (303-14B Electronic Engine Controls - V8 4.2L Petrol/V8 S/C 4.2L Petrol, Diagnosis and Testing).<br>For purge valve tests,<br>REFER to: Evaporative Emissions - VIN Range: N52048->N99999 (303-13 Evaporative Emissions, Diagnosis and Testing).<br>For fuel pressure test, GO to Pinpoint Test E. For ignition system,<br>REFER to: Electronic Engine Controls - VIN Range: N80181->R99999 (303-14A Electronic Engine Controls - 2.5L NA V6 - AJV6/3.0L NA V6 - AJ27, Diagnosis and Testing).<br>or<br>REFER to: Electronic Engine Controls - VIN Range: N80181->R99999 (303-14B Electronic Engine Controls - V8 4.2L Petrol/V8 S/C 4.2L Petrol, Diagnosis and Testing).<br>For EGR tests,<br>REFER to: Engine Emission Control - VIN Range: N80181->R99999 (303-08A Engine Emission Control - V8 4.2L Petrol/V8 S/C 4.2L Petrol/2.5L NA V6 - AJV6/3.0L NA V6 - AJ27, Diagnosis and Testing). |
| Engine stalls soon after start | • Breather system disconnected/restricted<br>• ECM relay<br>• Harness<br>• MAF sensor<br>• Ignition system<br>• Air filter restricted<br>• Fuel lines<br>• Fuel rail pressure (FRP) sensor<br>• Air leakage | For breather system information,<br>REFER to: Engine Emission Control - VIN Range: N80181->R99999 (303-08A Engine Emission Control - V8 4.2L Petrol/V8 S/C 4.2L Petrol/2.5L NA V6 - AJV6/3.0L NA V6 - AJ27, Diagnosis and Testing).<br>For ECM relay and MAF sensor tests,<br>REFER to: Electronic Engine Controls - VIN Range: N80181->R99999 (303-14A Electronic Engine Controls - 2.5L NA V6 - AJV6/3.0L NA V6 - AJ27, Diagnosis and Testing).<br>or<br>REFER to: Electronic Engine Controls - VIN Range: N80181->R99999 (303-14B Electronic Engine Controls - V8 4.2L Petrol/V8 S/C 4.2L Petrol, Diagnosis and Testing).<br>For ignition system,<br>REFER to: Engine Ignition - VIN Range: N52048->N99999 (303-07A Engine Ignition - 2.5L NA V6 - AJV6/3.0L NA V6 - AJ27, Diagnosis and Testing).<br>or<br>REFER to: Engine Ignition - VIN Range: N52048->N99999 (303-07B Engine Ignition - V8 4.2L Petrol/V8 S/C 4.2L Petrol, Diagnosis and Testing). |

GETtheMANUAL.com

| Symptom | Possible source | Action |
|---|---|---|
| | | For air filter and intake information,<br>REFER to: Intake Air Distribution and Filtering - VIN Range: N52048->N99999 (303-12A Intake Air Distribution and Filtering - 2.5L NA V6 - AJV6/3.0L NA V6 - AJ27, Diagnosis and Testing).<br>or<br>REFER to: Intake Air Distribution and Filtering - VIN Range: N52048->N99999 (303-12B Intake Air Distribution and Filtering - V8 4.2L Petrol/V8 S/C 4.2L Petrol, Diagnosis and Testing).<br>For fuel line tests, GO to Pinpoint Test F. For FRP sensor tests,<br>REFER to: Electronic Engine Controls - VIN Range: N80181->R99999 (303-14A Electronic Engine Controls - 2.5L NA V6 - AJV6/3.0L NA V6 - AJ27, Diagnosis and Testing).<br>or<br>REFER to: Electronic Engine Controls - VIN Range: N80181->R99999 (303-14B Electronic Engine Controls - V8 4.2L Petrol/V8 S/C 4.2L Petrol, Diagnosis and Testing). |
| Engine hesitates/poor acceleration | • Fuel pump<br>• Injector leak<br>• Fuel pressure<br>• Fuel lines<br>• Air leakage<br>• Throttle position (TP) sensors<br>• Accelerator pedal position (APP) sensor<br>• Throttle motor<br>• Ignition system<br>• EGR system<br>• HO2 sensors<br>• Transmission malfunction<br>• Restricted pedal travel (carpet, etc) | For fuel pressure test, GO to Pinpoint Test E. For fuel line tests, GO to Pinpoint Test F. For intake system,<br>REFER to: Intake Air Distribution and Filtering - VIN Range: N52048->N99999 (303-12A Intake Air Distribution and Filtering - 2.5L NA V6 - AJV6/3.0L NA V6 - AJ27, Diagnosis and Testing).<br>or<br>REFER to: Intake Air Distribution and Filtering - VIN Range: N52048->N99999 (303-12B Intake Air Distribution and Filtering - V8 4.2L Petrol/V8 S/C 4.2L Petrol, Diagnosis and Testing).<br>For FRP, TP, APP sensor and throttle motor tests,<br>REFER to: Electronic Engine Controls - VIN Range: N80181->R99999 (303-14A Electronic Engine Controls - 2.5L NA V6 - AJV6/3.0L NA V6 - AJ27, Diagnosis and Testing).<br>or<br>REFER to: Electronic Engine Controls - VIN Range: N80181->R99999 (303-14B Electronic Engine Controls - V8 4.2L Petrol/V8 S/C 4.2L Petrol, Diagnosis and Testing).<br>For ignition system,<br>REFER to: Engine Ignition - VIN Range: N52048->N99999 (303-07A Engine Ignition - 2.5L NA V6 - AJV6/3.0L NA V6 - AJ27, Diagnosis and Testing).<br>or<br>REFER to: Engine Ignition - VIN Range: N52048->N99999 (303-07B Engine Ignition - V8 4.2L Petrol/V8 S/C 4.2L Petrol, Diagnosis and Testing).<br>For EGR,<br>REFER to: Engine Emission Control - VIN Range: N80181->R99999 (303-08A Engine Emission Control - V8 4.2L Petrol/V8 S/C 4.2L Petrol/2.5L NA V6 - AJV6/3.0L NA V6 - AJ27, Diagnosis and Testing).<br>Check for DTCs indicating a faulty HO2 sensor. Refer to the DTC index. For transmission information,<br>REFER to: Diagnostic Strategy - VIN Range: N52048->N99999 (307-01 Automatic Transmission/Transaxle, Diagnosis and Testing).<br>Check accelerator pedal travel. |
| Engine backfires | • Fuel pump<br>• Fuel lines<br>• Air leakage<br>• MAF sensor<br>• APP sensor<br>• HO2 sensors<br>• Ignition system<br>• Sticking variable camshaft timing (VCT) hub | For fuel pressure test, GO to Pinpoint Test E. For fuel line tests, GO to Pinpoint Test F. For intake system,<br>REFER to: Intake Air Distribution and Filtering - VIN Range: N52048->N99999 (303-12A Intake Air Distribution and Filtering - 2.5L NA V6 - AJV6/3.0L NA V6 - AJ27, Diagnosis and Testing).<br>or<br>REFER to: Intake Air Distribution and Filtering - VIN Range: N52048->N99999 (303-12B Intake Air Distribution and Filtering - V8 4.2L Petrol/V8 S/C 4.2L Petrol, Diagnosis and Testing).<br>For MAF and APP sensor tests,<br>REFER to: Electronic Engine Controls - VIN Range: N80181->R99999 (303-14A Electronic Engine Controls - 2.5L NA V6 - AJV6/3.0L NA V6 - AJ27, Diagnosis and Testing).<br>or<br>REFER to: Electronic Engine Controls - VIN Range: N80181->R99999 (303-14B Electronic Engine Controls - V8 4.2L Petrol/V8 S/C 4.2L Petrol, Diagnosis and Testing).<br>Check for DTCs indicating a faulty HO2 sensor. Refer to the DTC index. For ignition system,<br>REFER to: Engine Ignition - VIN Range: N52048->N99999 (303-07A Engine Ignition - 2.5L NA V6 - AJV6/3.0L NA V6 - AJ27, Diagnosis and Testing).<br>or<br>REFER to: Engine Ignition - VIN Range: N52048->N99999 (303-07B Engine Ignition - V8 4.2L Petrol/V8 S/C 4.2L Petrol, Diagnosis and Testing).<br>Check DTCs for VCT range/performance fault. For VCT information,<br>REFER to: Engine - V8 4.2L Petrol/V8 S/C 4.2L Petrol/2.5L NA V6 - AJV6/3.0L NA V6 - AJ27 (303-00 Engine System - General Information, Diagnosis and Testing). |
| Engine surges | • Fuel pump<br>• Fuel lines<br>• MAF sensor<br>• Harness<br>• TP sensors<br>• Throttle motor<br>• Ignition system | For fuel pressure test, GO to Pinpoint Test E. For fuel line tests, GO to Pinpoint Test F. For MAF sensor, TP sensor, and throttle motor relay tests,<br>REFER to: Electronic Engine Controls - VIN Range: N80181->R99999 (303-14A Electronic Engine Controls - 2.5L NA V6 - AJV6/3.0L NA V6 - AJ27, Diagnosis and Testing).<br>or<br>REFER to: Electronic Engine Controls - VIN Range: |

GETtheMANUALS.org

| Symptom | Possible source | Action |
|---|---|---|
| | | N80181->R99999 (303-14B Electronic Engine Controls - V8 4.2L Petrol/V8 S/C 4.2L Petrol, Diagnosis and Testing).<br>For ignition system,<br>REFER to: Engine Ignition - VIN Range: N52048->N99999 (303-07A Engine Ignition - 2.5L NA V6 - AJV6/3.0L NA V6 - AJ27, Diagnosis and Testing).<br>or<br>REFER to: Engine Ignition - VIN Range: N52048->N99999 (303-07B Engine Ignition - V8 4.2L Petrol/V8 S/C 4.2L Petrol, Diagnosis and Testing). |
| Engine detonates/knocks | • Knock sensor (KS)/circuit malfunction<br>• Fuel pump<br>• Fuel lines<br>• FRP sensor<br>• MAF sensor<br>• HO2 sensors<br>• Air leakage<br>• Sticking VCT hub<br>• BARO sensor malfunction (internal ECM fault) | For KS circuit tests,<br>REFER to: Electronic Engine Controls - VIN Range: N80181->R99999 (303-14A Electronic Engine Controls - 2.5L NA V6 - AJV6/3.0L NA V6 - AJ27, Diagnosis and Testing).<br>or<br>REFER to: Electronic Engine Controls - VIN Range: N80181->R99999 (303-14B Electronic Engine Controls - V8 4.2L Petrol/V8 S/C 4.2L Petrol, Diagnosis and Testing).<br>For fuel pressure test, GO to Pinpoint Test E. For fuel line tests, GO to Pinpoint Test F. For MAF, FRP sensor and HO2 sensor tests,<br>REFER to: Electronic Engine Controls - VIN Range: N80181->R99999 (303-14A Electronic Engine Controls - 2.5L NA V6 - AJV6/3.0L NA V6 - AJ27, Diagnosis and Testing).<br>or<br>REFER to: Electronic Engine Controls - VIN Range: N80181->R99999 (303-14B Electronic Engine Controls - V8 4.2L Petrol/V8 S/C 4.2L Petrol, Diagnosis and Testing).<br>For intake system,<br>REFER to: Intake Air Distribution and Filtering - VIN Range: N52048->N99999 (303-12A Intake Air Distribution and Filtering - 2.5L NA V6 - AJV6/3.0L NA V6 - AJ27, Diagnosis and Testing).<br>or<br>REFER to: Intake Air Distribution and Filtering - VIN Range: N52048->N99999 (303-12B Intake Air Distribution and Filtering - V8 4.2L Petrol/V8 S/C 4.2L Petrol, Diagnosis and Testing).<br>Check DTCs for VCT range/performance fault. For VCT information,<br>REFER to: Engine - V8 4.2L Petrol/V8 S/C 4.2L Petrol/2.5L NA V6 - AJV6/3.0L NA V6 - AJ27 (303-00 Engine System - General Information, Diagnosis and Testing).<br>Refer to the warranty policy and procedures manual if an ECM is suspect. |

## DTC index

• NOTE: Generic scan tools may not read the codes listed, or may read only 5-digit codes. Match the 5 digits from the scan tool to the first 5 digits of the 7-digit code listed to identify the fault (the last 2 digits give extra information read by the manufacturer-approved diagnostic system).

• NOTE: For a full list of DTCs,
REFER to: Electronic Engine Controls - VIN Range: N80181->R99999 (303-14A Electronic Engine Controls - 2.5L NA V6 - AJV6/3.0L NA V6 - AJ27, Diagnosis and Testing).
or
REFER to: Electronic Engine Controls - VIN Range: N80181->R99999 (303-14B Electronic Engine Controls - V8 4.2L Petrol/V8 S/C 4.2L Petrol, Diagnosis and Testing).

| DTC | Description | Possible source | Action |
|---|---|---|---|
| P008700 | Fuel rail/system pressure - too low | • Fuel rail pressure (FRP) sensor disconnected<br>• FRP sensor to ECM sensing circuit: short circuit to ground<br>• FRP sensor supply circuit: high resistance<br>• FRP sensor failure<br>• Fuel pump failure<br>• Fuel line leak<br>• Restricted fuel line | For FRP sensor tests,<br>REFER to: Electronic Engine Controls - VIN Range: N80181->R99999 (303-14A Electronic Engine Controls - 2.5L NA V6 - AJV6/3.0L NA V6 - AJ27, Diagnosis and Testing).<br>or<br>REFER to: Electronic Engine Controls - VIN Range: N80181->R99999 (303-14B Electronic Engine Controls - V8 4.2L Petrol/V8 S/C 4.2L Petrol, Diagnosis and Testing).<br>For fuel line tests, GO to Pinpoint Test F. For fuel pressure tests, GO to Pinpoint Test E. |
| P008800 | Fuel rail/system pressure - too high | • FRP sensor to ECM wiring (supply/sense): short circuit to each other<br>• FRP sensor to ECM sense circuit: short circuit to power<br>• FRP sensor ground circuit: high resistance<br>• FRP sensor failure<br>• Restricted fuel line<br>• Fuel pump short circuit to battery | For FRP sensor tests,<br>REFER to: Electronic Engine Controls - VIN Range: N80181->R99999 (303-14A Electronic Engine Controls - 2.5L NA V6 - AJV6/3.0L NA V6 - AJ27, Diagnosis and Testing).<br>or<br>REFER to: Electronic Engine Controls - VIN Range: N80181->R99999 (303-14B Electronic Engine Controls - V8 4.2L Petrol/V8 S/C 4.2L Petrol, Diagnosis and Testing).<br>For fuel line tests, GO to Pinpoint Test F. |
| P017100 | System too lean (right hand bank) | • Air intake leak between MAF sensor and cylinder head<br>• Fuel filter/system restriction<br>• Fuel injector restriction<br>• MAF sensor fault (low intake air flow)<br>• Exhaust leak (before catalyst) | For intake system information,<br>REFER to: Intake Air Distribution and Filtering - VIN Range: N52048->N99999 (303-12A Intake Air Distribution and Filtering - 2.5L NA V6 - AJV6/3.0L NA V6 - AJ27, Diagnosis and Testing).<br>or<br>REFER to: Intake Air Distribution and Filtering - VIN Range: N52048->N99999 (303-12B Intake Air Distribution and Filtering - V8 4.2L Petrol/V8 S/C 4.2L Petrol, Diagnosis and Testing). |

GETtheMANUALS.org

| DTC | Description | Possible source | Action |
|---|---|---|---|
| | | | For fuel line tests, GO to Pinpoint Test F. For fuel pressure tests, GO to Pinpoint Test E. For fuel injector tests,<br>REFER to: Fuel Charging and Controls - VIN Range: N52048->N99999 (303-04A Fuel Charging and Controls - 2.5L NA V6 - AJV6/3.0L NA V6 - AJ27, Diagnosis and Testing).<br>or<br>REFER to: Fuel Charging and Controls - VIN Range: N52048->N99999 (303-04B Fuel Charging and Controls - V8 4.2L Petrol/V8 S/C 4.2L Petrol, Diagnosis and Testing).<br>For MAF sensor circuit tests,<br>REFER to: Electronic Engine Controls - VIN Range: N80181->R99999 (303-14A Electronic Engine Controls - 2.5L NA V6 - AJV6/3.0L NA V6 - AJ27, Diagnosis and Testing).<br>or<br>REFER to: Electronic Engine Controls - VIN Range: N80181->R99999 (303-14B Electronic Engine Controls - V8 4.2L Petrol/V8 S/C 4.2L Petrol, Diagnosis and Testing).<br>Check the exhaust system (before catalyst) for condition and security,<br>REFER to: Exhaust System - VIN Range: N13089->N99999 (309-00 Exhaust System, Diagnosis and Testing). |
| P0017400 | System too lean (left hand bank) | • Air intake leak between MAF sensor and cylinder head<br>• Fuel filter/system restriction<br>• Fuel injector restriction<br>• MAF sensor fault (low intake air flow)<br>• Exhaust leak (before catalyst) | For intake system information,<br>REFER to: Intake Air Distribution and Filtering - VIN Range: N52048->N99999 (303-12A Intake Air Distribution and Filtering - 2.5L NA V6 - AJV6/3.0L NA V6 - AJ27, Diagnosis and Testing).<br>or<br>REFER to: Intake Air Distribution and Filtering - VIN Range: N52048->N99999 (303-12B Intake Air Distribution and Filtering - V8 4.2L Petrol/V8 S/C 4.2L Petrol, Diagnosis and Testing).<br>For fuel line tests, GO to Pinpoint Test F. For fuel pressure tests, GO to Pinpoint Test E. For fuel injector tests,<br>REFER to: Fuel Charging and Controls - VIN Range: N52048->N99999 (303-04A Fuel Charging and Controls - 2.5L NA V6 - AJV6/3.0L NA V6 - AJ27, Diagnosis and Testing).<br>or<br>REFER to: Fuel Charging and Controls - VIN Range: N52048->N99999 (303-04B Fuel Charging and Controls - V8 4.2L Petrol/V8 S/C 4.2L Petrol, Diagnosis and Testing).<br>For MAF sensor circuit tests,<br>REFER to: Electronic Engine Controls - VIN Range: N80181->R99999 (303-14A Electronic Engine Controls - 2.5L NA V6 - AJV6/3.0L NA V6 - AJ27, Diagnosis and Testing).<br>or<br>REFER to: Electronic Engine Controls - VIN Range: N80181->R99999 (303-14B Electronic Engine Controls - V8 4.2L Petrol/V8 S/C 4.2L Petrol, Diagnosis and Testing).<br>Check the exhaust system (before catalyst) for condition and security,<br>REFER to: Exhaust System - VIN Range: N13089->N99999 (309-00 Exhaust System, Diagnosis and Testing). |
| P030000 | Random/multiple cylinder misfire detected | • ECM to ignition coil primary circuit faults (cylinder misfire detected DTCs also logged)<br>• Ignition coil failure<br>• Spark plug failure/fouled/incorrect gap<br>• Fuel delivery pressure (low/high)<br>• Fuel injector circuit fault(s) (injector DTCs also logged)<br>• Fuel injectors restricted/leaking<br>• Fuel injectors continuously open<br>• Fuel contamination<br>• Cylinder compression low<br>• Worn camshaft/broken valve springs<br>• Valve clearance adjustment | For ignition coil and spark plug tests,<br>REFER to: Engine Ignition - VIN Range: N52048->N99999 (303-07A Engine Ignition - 2.5L NA V6 - AJV6/3.0L NA V6 - AJ27, Diagnosis and Testing).<br>or<br>REFER to: Engine Ignition - VIN Range: N52048->N99999 (303-07B Engine Ignition - V8 4.2L Petrol/V8 S/C 4.2L Petrol, Diagnosis and Testing).<br>For fuel pressure test, GO to Pinpoint Test E. For fuel injector circuit tests,<br>REFER to: Fuel Charging and Controls - VIN Range: N52048->N99999 (303-04A Fuel Charging and Controls - 2.5L NA V6 - AJV6/3.0L NA V6 - AJ27, Diagnosis and Testing).<br>or<br>REFER to: Fuel Charging and Controls - VIN Range: N52048->N99999 (303-04B Fuel Charging and Controls - V8 4.2L Petrol/V8 S/C 4.2L Petrol, Diagnosis and Testing).<br>Check compressions, valve gear, etc,<br>REFER to: Engine - V8 4.2L Petrol/V8 S/C 4.2L Petrol/2.5L NA V6 - AJV6/3.0L NA V6 - AJ27 (303-00 Engine System - General Information, Diagnosis and Testing). |

GETtheMANUALS.org

| DTC | Description | Possible source | Action |
|---|---|---|---|
| P046129 | Fuel level sensor A circuit range/performance - signal invalid | • Fuel level sensor to rear electronic module (REM) circuits; intermittent short circuit, high resistance<br>• Fuel level sensor failure<br>• REM fault (incorrect fuel level data) | For fuel level sensor tests, GO to Pinpoint Test B. |
| P04612F | Fuel level sensor A circuit range/performance - signal erratic | • Fuel level sensor to rear electronic module (REM) circuits; intermittent short circuit, high resistance<br>• Fuel level sensor failure<br>• REM fault (incorrect fuel level data) | For fuel level sensor tests, GO to Pinpoint Test B. |
| P046200 | Fuel level sensor A circuit low input | • Fuel level sensor to rear electronic module (REM) circuits; intermittent short circuit to ground or high resistance<br>• Fuel level sensor failure<br>• REM fault (incorrect fuel level data) | For fuel level sensor tests, GO to Pinpoint Test B. |
| P046300 | Fuel level sensor A circuit high input | • Fuel level sensor to rear electronic module (REM) circuits; intermittent short circuit to power<br>• Fuel level sensor failure<br>• REM fault (incorrect fuel level data) | For fuel level sensor tests, GO to Pinpoint Test B. |
| P062700 | Fuel pump A control circuit/open | • Invalid fuel pump duty requested by ECM | Refer to the warranty policy and procedures manual if an ECM is suspect. |
| P062A00 | Fuel pump driver module (FPDM) control circuit range/performance (vehicles with supercharger only) | • ECM to FPDM control drive circuits; intermittent short circuit, high resistance<br>• FPDM failure<br>• Rear electronic module (REM) failure | For REM power and ground tests, GO to Pinpoint Test A. For ECM to FPDM circuit tests, GO to Pinpoint Test D. |
| P263500 | Fuel pump A low flow/performance (fuel pump not activated when requested by ECM) | • ECM to rear electronic module (REM) drive circuit: short circuit, high resistance<br>• Fuel pump failure<br>• REM failure | For REM power and ground tests, GO to Pinpoint Test A. For ECM to REM circuit tests, GO to Pinpoint Test C. Check the fuel pressure. GO to Pinpoint Test E. |

## Pinpoint tests

CAUTION: When probing connectors to take measurements in the course of the pinpoint tests, use the adaptor kit, part number 3548-1358-00.

• NOTE: When performing electrical voltage or resistance tests, always use a digital multimeter (DMM) accurate to 3 decimal places, and with an up-to-date calibration certificate. When testing resistance, always take the resistance of the DMM leads into account.

• NOTE: Check and rectify basic faults before beginning diagnostic routines involving pinpoint tests.

**PINPOINT TEST A : REM POWER AND GROUND CIRCUITS**

| TEST CONDITIONS | DETAILS/RESULTS/ACTIONS |
|---|---|
| **A1: CHECK THE IGNITION POWER SUPPLY TO THE REM** | |
| | 1 Key off.<br>2 Disconnect the REM electrical connector, CA100.<br>3 Key on, engine off.<br>4 Measure the voltage between:<br>**REM connector CA100, harness side** — **Battery**<br>Pin 08 — Negative terminal |
| | Is the voltage less than 10 volts?<br>**Yes**<br>REPAIR the circuit between the battery and the REM. This circuit includes splice CAS31, the inertia switch and fuse 4 of the primary junction box. For additional information, refer to the wiring diagrams. CLEAR the DTC, test the system for normal operation.<br>**No**<br>GO to A2. |
| **A2: CHECK THE POWER SUPPLY VOLTAGE TO THE REM** | |
| | 1 Key off.<br>2 Disconnect the REM electrical connector, CA100.<br>3 Measure the voltage between:<br>**REM connector CA101, harness side** — **Battery**<br>Pin 01 — Negative terminal |
| | Is the voltage less than 10 volts?<br>**Yes**<br>REPAIR the circuit between the battery and the REM. This circuit includes fuse 47 of the rear power distribution box and the fuel pump relay. For additional information, refer to the wiring diagrams. CLEAR the DTC, test the system for normal operation.<br>**No**<br>GO to A3. |
| **A3: CHECK THE GROUND TO THE REM** | |
| | 1 Key off.<br>2 Measure the resistance between:<br>**REM connector CA101, harness side** — **Battery**<br>pin 02 — Negative terminal |

GETtheMANUALS.org

| | |
|---|---|
| | Is the resistance greater than 5 ohms?<br>**Yes**<br>REPAIR the high resistance circuit. For additional information, refer to the wiring diagrams. CLEAR the DTC, test the system for normal operation.<br>**No**<br>CHECK for DTCs. REFER to the DTC index. |

## PINPOINT TEST B : FUEL LEVEL SENSOR(S) CIRCUIT RANGE/PERFORMANCE

| TEST CONDITIONS | DETAILS/RESULTS/ACTIONS |
|---|---|
| **B1: CHECK THE SIGNAL CIRCUIT BETWEEN THE REM AND LEVEL SENSOR A FOR SHORT CIRCUIT TO GROUND** | |
| | 1 Disconnect the fuel pump module electrical connector, FP16. |
| | 2 Measure the resistance between: |
| | **Fuel module connector FP16, harness side** / **Battery**<br>Pin 02 / Negative terminal |
| | Is the resistance less than 10,000 ohms?<br>**Yes**<br>REPAIR the short circuit. For additional information, refer to the wiring diagrams. CLEAR the DTC, test the system for normal operation.<br>**No**<br>GO to B2. |
| **B2: CHECK THE SIGNAL CIRCUIT BETWEEN THE REM AND LEVEL SENSOR A FOR SHORT CIRCUIT TO POWER** | |
| | 1 Measure the resistance between: |
| | **Fuel module connector FP16, harness side** / **Battery**<br>Pin 02 / Positive terminal |
| | Is the resistance less than 10,000 ohms?<br>**Yes**<br>REPAIR the short circuit. For additional information, refer to the wiring diagrams. CLEAR the DTC, test the system for normal operation.<br>**No**<br>GO to B3. |
| **B3: CHECK THE SIGNAL CIRCUIT BETWEEN THE REM AND LEVEL SENSOR B FOR SHORT CIRCUIT TO GROUND** | |
| | 1 Measure the resistance between: |
| | **Fuel module connector FP16, harness side** / **Battery**<br>Pin 06 / Negative terminal |
| | Is the resistance less than 10,000 ohms?<br>**Yes**<br>REPAIR the short circuit. For additional information, refer to the wiring diagrams. CLEAR the DTC, test the system for normal operation.<br>**No**<br>GO to B4. |
| **B4: CHECK THE SIGNAL CIRCUIT BETWEEN THE REM AND LEVEL SENSOR B FOR SHORT CIRCUIT TO POWER** | |
| | 1 Measure the resistance between: |
| | **Fuel module connector FP16, harness side** / **Battery**<br>Pin 06 / Positive terminal |
| | Is the resistance less than 10,000 ohms?<br>**Yes**<br>REPAIR the short circuit. For additional information, refer to the wiring diagrams. CLEAR the DTC, test the system for normal operation.<br>**No**<br>GO to B5. |
| **B5: CHECK THE LEVEL SENSOR GROUND CIRCUIT BETWEEN THE REM AND LEVEL SENSORS FOR SHORT CIRCUIT TO GROUND** | |
| | 1 Measure the resistance between: |
| | **Fuel module connector FP16, harness side** / **Battery**<br>Pin 01 / Negative terminal |
| | 2 Measure the resistance between: |
| | **Fuel module connector FP16, harness side** / **Battery**<br>Pin 05 / Negative terminal |
| | Is either resistance less than 10,000 ohms?<br>**Yes**<br>REPAIR the short circuit. For additional information, refer to the wiring diagrams. CLEAR the DTC, test the system for normal operation.<br>**No**<br>GO to B6. |
| **B6: CHECK THE LEVEL SENSOR GROUND CIRCUIT BETWEEN THE REM AND LEVEL SENSORS FOR SHORT CIRCUIT TO POWER** | |
| | 1 Measure the resistance between: |
| | **Fuel module connector FP16, harness side** / **Battery**<br>Pin 01 / Positive terminal |
| | 2 Measure the resistance between: |
| | **Fuel module connector FP16, harness side** / **Battery**<br>Pin 05 / Negative terminal |
| | Is either resistance less than 10,000 ohms?<br>**Yes**<br>REPAIR the short circuit. For additional information, refer to the wiring diagrams. CLEAR the DTC, test the system for normal operation.<br>**No**<br>GO to B7. |
| **B7: CHECK THE SENSOR A RESISTANCE EMPTY** | |
| | 1 Remove the right-hand fuel pump module.<br>REFER to: Fuel Pump Module - V8 4.2L Petrol/V8 S/C 4.2L Petrol/2.5L NA V6 - AJV6/3.0L NA V6 - AJ27, VIN Range: N52048->N99999 (310-01 Fuel Tank and Lines, Removal and Installation). |
| | 2 Move the sensor float to it's lowest position. |
| | 3 Measure the resistance between: |
| | **Fuel module connector FP16, component side** / **Fuel module connector FP16, component side**<br>Pin 02 / Pin 01 |

GETtheMANUALS.org

Is the resistance 15 ohms?

**Yes**

GO to B8.

**No**

INSTALL a new level sensor,
REFER to: Fuel Level Sender RH - V8 4.2L Petrol/V8 S/C 4.2L Petrol/2.5L NA V6 - AJV6/3.0L NA V6 - AJ27, VIN Range: N52048->N99999 (310-01 Fuel Tank and Lines, Removal and Installation).
CLEAR the DTC, test the system for normal operation.

**B8: CHECK THE SENSOR A RESISTANCE FULL**

1. Move the sensor float to it's highest position.
2. Measure the resistance between:

| Fuel module connector FP16, component side | Fuel module connector FP16, component side |
|---|---|
| Pin 02 | Pin 01 |

Is the resistance 160 ohms?

**Yes**

GO to B9.

**No**

INSTALL a new level sensor,
REFER to: Fuel Level Sender RH - V8 4.2L Petrol/V8 S/C 4.2L Petrol/2.5L NA V6 - AJV6/3.0L NA V6 - AJ27, VIN Range: N52048->N99999 (310-01 Fuel Tank and Lines, Removal and Installation).
CLEAR the DTC, test the system for normal operation.

**B9: CHECK THE SENSOR B RESISTANCE EMPTY**

1. Remove the left-hand fuel pump module.
REFER to: Fuel Pump Module - V8 4.2L Petrol/V8 S/C 4.2L Petrol/2.5L NA V6 - AJV6/3.0L NA V6 - AJ27, VIN Range: N52048->N99999 (310-01 Fuel Tank and Lines, Removal and Installation).
2. Move the sensor float to it's lowest position.
3. Measure the resistance between:

| Fuel module connector FP16, component side | Fuel module connector FP16, component side |
|---|---|
| Pin 06 | Pin 05 |

Is the resistance 15 ohms?

**Yes**

GO to B10.

**No**

INSTALL a new level sensor,
REFER to: Fuel Level Sender LH - V8 4.2L Petrol/V8 S/C 4.2L Petrol/2.5L NA V6 - AJV6/3.0L NA V6 - AJ27, VIN Range: N52048->N99999 (310-01 Fuel Tank and Lines, Removal and Installation).
CLEAR the DTC, test the system for normal operation.

**B10: CHECK THE SENSOR B RESISTANCE FULL**

1. Move the sensor float to it's highest position.
2. Measure the resistance between:

| Fuel module connector FP16, component side | Fuel module connector FP16, component side |
|---|---|
| Pin 06 | Pin 05 |

Is the resistance 160 ohms?

**Yes**

GO to B13.

**No**

INSTALL a new level sensor,
REFER to: Fuel Level Sender LH - V8 4.2L Petrol/V8 S/C 4.2L Petrol/2.5L NA V6 - AJV6/3.0L NA V6 - AJ27, VIN Range: N52048->N99999 (310-01 Fuel Tank and Lines, Removal and Installation).
CLEAR the DTC, test the system for normal operation.

**B11: CHECK THE SENSOR B RESISTANCE EMPTY**

1. Remove the left-hand fuel pump module.
REFER to: Fuel Pump Module - V8 4.2L Petrol/V8 S/C 4.2L Petrol/2.5L NA V6 - AJV6/3.0L NA V6 - AJ27, VIN Range: N52048->N99999 (310-01 Fuel Tank and Lines, Removal and Installation).
2. Move the sensor float to it's lowest position.
3. Measure the resistance between:

| Fuel module connector FP16, component side | Fuel module connector FP16, component side |
|---|---|
| Pin 06 | Pin 05 |

Is the resistance 15 ohms?

**Yes**

GO to B12.

**No**

INSTALL a new level sensor,
REFER to: Fuel Level Sender LH - V8 4.2L Petrol/V8 S/C 4.2L Petrol/2.5L NA V6 - AJV6/3.0L NA V6 - AJ27, VIN Range: N52048->N99999 (310-01 Fuel Tank and Lines, Removal and Installation).
CLEAR the DTC, test the system for normal operation.

**B12: CHECK THE SENSOR B RESISTANCE FULL**

1. Move the sensor float to it's highest position.
2. Measure the resistance between:

| Fuel module connector FP16, component side | Fuel module connector FP16, component side |
|---|---|
| Pin 06 | Pin 05 |

Is the resistance 160 ohms?

**Yes**

GO to B13.

**No**

INSTALL a new level sensor,
REFER to: Fuel Level Sender LH - V8 4.2L Petrol/V8 S/C 4.2L Petrol/2.5L NA V6 - AJV6/3.0L NA V6 - AJ27, VIN Range: N52048->N99999 (310-01 Fuel Tank and Lines, Removal and Installation).
CLEAR the DTC, test the system for normal operation.

**B13: CHECK THE SIGNAL CIRCUIT BETWEEN THE REM AND LEVEL SENSOR A FOR HIGH RESISTANCE**

1. Disconnect the REM electrical connector, CA101.
2. Measure the resistance between:

| REM connector CA101, harness side | Fuel module connector FP16, harness side |
|---|---|
| Pin 15 | Pin 02 |

GETtheMANUALS.org

Is the resistance greater than 5 ohms?

**Yes**

REPAIR the high resistance circuit. For additional information, refer to the wiring diagrams. CLEAR the DTC, test the system for normal operation.

**No**

GO to B14.

**B14: CHECK THE SIGNAL CIRCUIT BETWEEN THE REM AND LEVEL SENSOR B FOR HIGH RESISTANCE**

1 Measure the resistance between:

| REM connector CA101, harness side | Fuel module connector FP16, harness side |
|---|---|
| Pin 16 | Pin 06 |

Is the resistance greater than 5 ohms?

**Yes**

REPAIR the high resistance circuit. For additional information, refer to the wiring diagrams. CLEAR the DTC, test the system for normal operation.

**No**

GO to B15.

**B15: CHECK THE LEVEL SENSOR GROUND CIRCUIT BETWEEN THE REM AND LEVEL SENSORS FOR HIGH RESISTANCE**

1 Disconnect the REM electrical connector, CA103.

2 Measure the resistance between:

| REM connector CA103, harness side | Fuel module connector FP16, harness side |
|---|---|
| Pin 23 | Pin 01 |

3 Measure the resistance between:

| REM connector CA103, harness side | Fuel module connector FP16, harness side |
|---|---|
| Pin 23 | Pin 05 |

Is either resistance greater than 5 ohms?

**Yes**

REPAIR the high resistance circuit. For additional information, refer to the wiring diagrams. CLEAR the DTC, test the system for normal operation.

**No**

CHECK for DTCs. REFER to the DTC index.

## PINPOINT TEST C : ECM TO REM DRIVE CIRCUIT

| TEST CONDITIONS | DETAILS/RESULTS/ACTIONS |
|---|---|

**C1: CHECK THE ECM TO REM DRIVE CIRCUIT FOR SHORT CIRCUIT TO GROUND**

1 Disconnect the REM electrical connector, CA103.

2 Measure the resistance between:

| REM connector CA103, harness side | Battery |
|---|---|
| Pin 19 | Negative terminal |

Is the resistance less than 10,000 ohms?

**Yes**

REPAIR the short circuit. For additional information, refer to the wiring diagrams. CLEAR the DTC, test the system for normal operation.

**No**

GO to C2.

**C2: CHECK THE ECM TO REM DRIVE CIRCUIT FOR SHORT CIRCUIT TO POWER**

1 Measure the resistance between:

| REM connector CA103, harness side | Battery |
|---|---|
| Pin 19 | Positive terminal |

Is the resistance less than 10,000 ohms?

**Yes**

REPAIR the short circuit. For additional information, refer to the wiring diagrams. CLEAR the DTC, test the system for normal operation.

**No**

GO to C3.

**C3: CHECK THE ECM TO REM DRIVE CIRCUIT FOR HIGH RESISTANCE**

1 Disconnect the ECM electrical connector, FH300.

2 Measure the resistance between:

| REM connector CA103, harness side | ECM connector FH300, harness side |
|---|---|
| Pin 19 | Pin 20 |

Is the resistance greater than 5 ohms?

**Yes**

REPAIR the high resistance circuit. For additional information, refer to the wiring diagrams. CLEAR the DTC, test the system for normal operation.

**No**

CHECK for DTCs indicating a REM or ECM fault. REFER to the DTC index.
REFER to: Electronic Engine Controls - VIN Range: N80181->R99999 (303-14A Electronic Engine Controls - 2.5L NA V6 - AJV6/3.0L NA V6 - AJ27, Diagnosis and Testing).
For vehicles with 3.0L engines and
REFER to: Electronic Engine Controls - VIN Range: N80181->R99999 (303-14B Electronic Engine Controls - V8 4.2L Petrol/V8 S/C 4.2L Petrol, Diagnosis and Testing).
For vehicles with 3.5L and 4.2L engines.

## PINPOINT TEST D : FUEL PUMP DRIVE CIRCUITS (VEHICLES WITH SUPERCHARGER)

| TEST CONDITIONS | DETAILS/RESULTS/ACTIONS |
|---|---|

**D1: CHECK THE IGNITION POWER SUPPLY TO THE FPDM**

1 Key off.

2 Disconnect the FPDM electrical connector, FP15.

3 Key on, engine off.

4 Measure the voltage between:

| FPDM connector FP15, harness side | Battery |
|---|---|
| pin 05 | Negative terminal |

GETtheMANUALS.org

Is the voltage less than 10 volts?

**Yes**

REPAIR the circuit between the battery and the FPDM. This circuit includes fuse 49 of the rear power distribution box. For additional information, refer to the wiring diagrams. CLEAR the DTC, test the system for normal operation.

**No**

GO to D2.

**D2: CHECK THE GROUND TO THE FPDM**

1 Key off.

2 Measure the resistance between:

| FPDM connector FP15, harness side | Battery |
|---|---|
| pin 06 | Negative terminal |

Is the resistance greater than 5 ohms?

**Yes**

REPAIR the high resistance circuit. For additional information, refer to the wiring diagrams. CLEAR the DTC, test the system for normal operation.

**No**

GO to D3.

**D3: CHECK THE FPDM TO FUEL PUMP NEGATIVE CIRCUIT FOR SHORT CIRCUIT TO GROUND**

1 Measure the resistance between:

| Fuel pump module connector FP15, harness side | Battery |
|---|---|
| Pin 02 | Negative terminal |

Is the resistance less than 10,000 ohms?

**Yes**

REPAIR the short circuit. For additional information, refer to the wiring diagrams. CLEAR the DTC, test the system for normal operation.

**No**

GO to D4.

**D4: CHECK THE FPDM TO FUEL PUMP NEGATIVE CIRCUIT FOR SHORT CIRCUIT TO POWER**

1 Measure the resistance between:

| Fuel pump module connector FP15, harness side | Battery |
|---|---|
| Pin 02 | Positive terminal |

Is the resistance less than 10,000 ohms?

**Yes**

REPAIR the short circuit. For additional information, refer to the wiring diagrams. CLEAR the DTC, test the system for normal operation.

**No**

GO to D5.

**D5: CHECK THE FPDM TO FUEL PUMP POSITIVE CIRCUIT FOR SHORT CIRCUIT TO GROUND**

1 Measure the resistance between:

| Fuel pump module connector FP15, harness side | Battery |
|---|---|
| Pin 01 | Negative terminal |

Is the resistance less than 10,000 ohms?

**Yes**

REPAIR the short circuit. For additional information, refer to the wiring diagrams. CLEAR the DTC, test the system for normal operation.

**No**

GO to D6.

**D6: CHECK THE FPDM TO FUEL PUMP POSITIVE CIRCUIT FOR SHORT CIRCUIT TO POWER**

1 Measure the resistance between:

| Fuel pump module connector FP15, harness side | Battery |
|---|---|
| Pin 01 | Positive terminal |

Is the resistance less than 10,000 ohms?

**Yes**

REPAIR the short circuit. For additional information, refer to the wiring diagrams. CLEAR the DTC, test the system for normal operation.

**No**

GO to D7.

**D7: CHECK THE FPDM TO FUEL PUMP NEGATIVE CIRCUIT FOR HIGH RESISTANCE**

1 Disconnect the fuel pump module electrical connector, FP16.

2 Measure the resistance between:

| FPDM connector FP15, harness side | Fuel module connector FP16, harness side |
|---|---|
| Pin 02 | Pin 03 |

Is the resistance greater than 5 ohms?

**Yes**

REPAIR the high resistance circuit. For additional information, refer to the wiring diagrams. CLEAR the DTC, test the system for normal operation.

**No**

GO to D8.

**D8: CHECK THE FPDM TO FUEL PUMP POSITIVE CIRCUIT FOR HIGH RESISTANCE**

1 Measure the resistance between:

| FPDM connector FP15, harness side | Fuel module connector FP16, harness side |
|---|---|
| Pin 01 | Pin 04 |

Is the resistance greater than 5 ohms?

**Yes**

REPAIR the high resistance circuit. For additional information, refer to the wiring diagrams. CLEAR the DTC, test the system for normal operation.

**No**

CHECK for DTCs indicating a module fault. REFER to the DTC index.

REFER to: Electronic Engine Controls - VIN Range: N80181->R99999 (303-14A Electronic Engine Controls - 2.5L NA V6 - AJV6/3.0L NA V6 - AJ27, Diagnosis and Testing).

For vehicles with 3.0L engines and

REFER to: Electronic Engine Controls - VIN Range: N80181->R99999 (303-14B Electronic Engine Controls - V8 4.2L Petrol/V8 S/C 4.2L Petrol, Diagnosis and Testing).

For vehicles with 3.5L and 4.2L engines.

GETtheMANUALS.org

**PINPOINT TEST E : CHECK THE FUEL SYSTEM PRESSURE**

| TEST CONDITIONS | DETAILS/RESULTS/ACTIONS |
|---|---|
| **E1: CHECK THE PUMP ACTIVITY** | |
| | 1 Remove the rear seat cushion.<br>REFER to: Rear Seat Cushion (501-10 Seating, Removal and Installation). |
| | 2 Key on, engine off. |
| | 3 Make sure the fuel pump relay is energized. |
| | 4 Listen for pump noise. |
| | Can the fuel pump be heard running?<br>**Yes**<br>GO to E2.<br>**No**<br>CHECK for DTCs. REFER to the DTC index. |
| **E2: CHECK THE FUEL SYSTEM PRESSURE** | |
| | WARNING: This procedure involves fuel handling. Be prepared for fuel spillage at all times and always observe fuel handling precautions. Failure to follow these instructions may result in personal injury.<br><br>• NOTE: The fuel pressure can be tested using the Jaguar approved diagnostic system datalogger facility, or by the use of a suitable gauge from the schraeder connector on the special tool fitted to the fuel rail.<br>REFER to: Fuel System Pressure Check (310-00 Fuel System - General Information, General Procedures).<br><br>1 Apply the parking brake. |
| | 2 Make sure the gear selector is in the **NEUTRAL** position for vehicles fitted with manual transmission, **PARK** position for vehicles fitted with automatic transmission. |
| | 3 Connect a suitable gauge to the fuel Schraeder valve. |
| | 4 Disconnect and plug the vacuum hose from the pressure regulator. |
| | 5 Key on, engine off.<br>• Make sure there are no leaks from the gauge connections |
| | 6 Record the fuel pressure reading. |
| | Is the fuel pressure between 4 and 5 bar (58.01 and 72.51 lb/in²)?<br>**Yes**<br>GO to E3.<br>**No**<br>CHECK for DTCs. REFER to the DTC index. |
| **E3: CHECK THE FUEL SYSTEM PRESSURE WITH THE ENGINE CRANKING** | |
| | 1 Key in start position. |
| | 2 Record the fuel pressure reading. |
| | Is the fuel pressure between 4 and 5 bar (58.01 and 72.51 lb/in²)?<br>**Yes**<br>GO to E4.<br>**No**<br>CHECK for DTCs. REFER to the DTC index. |
| **E4: CHECK THE FUEL SYSTEM PRESSURE WITH THE ENGINE IDLING (WHERE POSSIBLE)** | |
| | 1 Key on, engine running. |
| | Is the fuel pressure between 4 and 5 bar (58.01 and 72.51 lb/in²)?<br>**Yes**<br>CHECK for DTCs and symptoms indicating another cause of the problem.<br>**No**<br>CHECK for DTCs. If there are no codes, suspect pump module failure.<br>REFER to: Fuel Pump Module - V8 4.2L Petrol/V8 S/C 4.2L Petrol/2.5L NA V6 - AJV6/3.0L NA V6 - AJ27, VIN Range: N52048->N99999 (310-01 Fuel Tank and Lines, Removal and Installation). |

## PINPOINT TEST F : CHECK THE FUEL LINES

| TEST CONDITIONS | DETAILS/RESULTS/ACTIONS |
|---|---|
| **F1: CHECK THE FUEL LINES FOR RESTRICTIONS** | |
| | WARNING: This procedure involves fuel handling. Be prepared for fuel spillage at all times and always observe fuel handling precautions. Failure to follow these instructions may result in personal injury.<br><br>1 Detach the fuel line from the fuel rail and from the fuel pump module. |
| | 2 Using an air line gently blow through the line checking for blockages or restrictions. |
| | Is a blockage or restriction evident?<br>**Yes**<br>CLEAR/REPAIR the blocked or restricted fuel line and test the system for normal operation.<br>**No**<br>GO to F2. |
| **F2: CHECK THE FUEL TANK LINES FOR RESTRICTIONS** | |
| | 1 Remove the fuel and transfer pump module locking rings.<br>REFER to: Fuel Pump Module - V8 4.2L Petrol/V8 S/C 4.2L Petrol/2.5L NA V6 - AJV6/3.0L NA V6 - AJ27, VIN Range: N52048->N99999 (310-01 Fuel Tank and Lines, Removal and Installation). |
| | 2 Detach the fuel lines from the transfer and fuel pump modules. |
| | 3 Using an air line gently blow through the line checking for blockages or restrictions. |
| | Is a blockage or restriction evident?<br>**Yes**<br>CLEAR/REPAIR the blocked or restricted fuel line and test the system for normal operation.<br>**No**<br>CHECK for DTCs and symptoms indicating another cause of the problem. |

GETtheMANUALS.org

# Fuel Tank and Lines - Fuel Tank and Lines2.7L V6 - TdV6

Diagnosis and Testing

## Principles of Operation

The 2.7L engine differs from the 2.0L diesel, in that it has an electric lift pump in the fuel tank, rather than drawing fuel from the tank with the engine-driven pump.

The fuel tank shares many of the features of the petrol variant, being of the same shape to facilitate the driveshaft, and using a jet pump to transfer fuel across the tank.

For additional information,
REFER to: Fuel Tank and Lines - VIN Range: N52048->N99999 (310-01 Fuel Tank and Lines, Description and Operation).

## Inspection and Verification

• WARNINGS:

Do **NOT** carry out any work on the fuel system with the engine running. The fuel pressure within the system can be as high as 1650 bar (23,930 lb/in²). Failure to follow this instruction may result in personal injury.

Eye protection must be worn at all times when working on or near any fuel related components. Failure to follow this instruction may result in personal injury.

This procedure involves fuel handling. Be prepared for fuel spillage at all times and always observe fuel handling precautions. Failure to follow this instruction may result in personal injury.

After carrying out repairs, the fuel system must be checked visually for leaks. This should be done after the engine has been run, but with the engine switched **OFF**. Failure to follow this instruction may result in personal injury.

If taken internally, **DO NOT** induce vomiting. Seek immediate medical attention. Failure to follow this instruction may result in personal injury.

If fuel contacts the eyes, flush the eyes with cold water or eyewash solution and seek medical attention. Failure to follow this instruction may result in personal injury.

Wash hands thoroughly after handling, as prolonged contact may cause irritation. Should irritation develop, seek medical attention. Failure to follow this instruction may result in personal injury.

• CAUTIONS:

Before disconnecting any part of the system, it is imperative that all dust, dirt and debris is removed from around components to prevent ingress of foreign matter into the fuel system. Failure to follow this instruction may result in damage to the vehicle.

The fuel pipes between the injectors and the rail must be discarded after each use, and new pipes installed. Failure to follow this instruction may result in damage to the vehicle.

It is essential that absolute cleanliness is observed when working with these components. Always install blanking plugs to any open orifices or lines. Failure to follow this instruction may result in damage to the vehicle.

Make sure that the workshop area in which the vehicle is being worked on is as clean and dust-free as possible. Areas in which work on clutches, brakes or where welding or machining are carried out are not suitable in view of the risk of contamination to the fuel system. Failure to follow this instruction may result in damage to the vehicle.

Make sure that any protective clothing worn is clean and made from lint-free non-flocking material. Failure to follow this instruction may result in damage to the vehicle.

Make sure that any protective gloves worn are new and are of the non-powdered latex type. Failure to follow this instruction may result in damage to the vehicle.

Make sure that clean, non-plated tools are used. Clean tools using a new brush that will not lose it's bristles and fresh cleaning fluid prior to starting work on the vehicle. Failure to follow this instruction may result in damage to the vehicle.

Use a steel-topped work bench and cover it with clean, lint-free, non-flocking material. Failure to follow this instruction may result in damage to the vehicle.

When probing connectors to take measurements in the course of the pinpoint tests, use the adaptor kit, part number 3548-1358-00. Failure to follow this instruction may result in damage to the vehicle.

• NOTE: This section contains references to Parameter Identifiers (PIDs). Where the Jaguar approved diagnostic system is not available, a scantool may be used to access these PIDs, all of which give information and some of which can be used to both read information and to activate components. The format of the information may vary, depending on the tool used.

GET theMANUALS.org

• NOTE: When performing voltage or resistance tests, always use a digital multimeter (DMM) accurate to 3 decimal places, and with an up-to-date calibration certificate. When testing resistance, always take the resistance of the DMM leads into account.

• NOTE: Check and rectify basic faults before beginning diagnostic routines involving pinpoint tests.

• NOTE: If DTCs are recorded and the symptom is not present when performing the pinpoint tests, an intermittent concern may be the cause. Always check for loose connections and corroded terminals.

1. **1.** Verify the customer concern.
2. **2.** Visually inspect for obvious signs of mechanical or electrical damage.

| Mechanical | Electrical |
|---|---|
| • Fuel line(s)<br>• Push connect fittings<br>• Fuel leak(s)<br>• Fuel filler cap<br>• Fuel tank filler pipe<br>• Fuel filter<br>• Fuel tank<br>• Fuel tank roll-over valve | • Inertia fuel shutoff (IFS) switch<br>• Lift pump<br>• Electrical connector(s)<br>• Fuse(s)<br>• Damaged or corroded wiring harness<br>• Fuel volume control valve (FVCV)<br>• Fuel pressure control valve (FPCV) |

3. **3.** If an obvious cause for an observed or reported concern is found, correct the cause (if possible) before proceeding to the next step
4. **4.** If the cause is not visually evident, verify the symptom and refer to the symptom chart.

## Symptom chart

| Symptom | Possible source | Action |
|---|---|---|
| Engine cranks, but does not start | • IFS switch<br>• Low/Contaminated fuel<br>• Air ingress<br>• Low pressure circuit fault<br>• Lift pump fault<br>• Blocked fuel filter<br>• FVCV blocked/contaminated<br>• FPCV blocked/contaminated<br>• Pump failure | Check that the inertia switch has not tripped. Check the fuel level/condition, check the lift pump operation,<br>REFER to: Fuel Charging and Controls (303-04C Fuel Charging and Controls - 2.7L V6 - TdV6, Diagnosis and Testing).<br>Check the fuel filter,<br>REFER to: Fuel Filter - 2.7L V6 - TdV6 (310-01 Fuel Tank and Lines, Removal and Installation).<br>Check the low-pressure fuel lines for connection/damage/leaks. Check the FVCV and FPCV,<br>REFER to: Fuel Charging and Controls (303-04C Fuel Charging and Controls - 2.7L V6 - TdV6, Diagnosis and Testing).<br>Check the high-pressure pump,<br>REFER to: Fuel Injection Pump (303-04C Fuel Charging and Controls - 2.7L V6 - TdV6, Removal and Installation). |
| Difficult to start | • Low/contaminated fuel<br>• Blocked fuel filter<br>• Low pressure circuit fault<br>• FVCV blocked/contaminated<br>• FPCV blocked/contaminated<br>• Injector(s) failure | Check the fuel level/condition,<br>REFER to: Fuel Charging and Controls (303-04C Fuel Charging and Controls - 2.7L V6 - TdV6, Diagnosis and Testing).<br>Check the fuel filter,<br>REFER to: Fuel Filter - 2.7L V6 - TdV6 (310-01 Fuel Tank and Lines, Removal and Installation).<br>Check the low-pressure fuel lines for connection/damage/leaks. Check the FVCV and FPCV,<br>REFER to: Fuel Charging and Controls (303-04C Fuel Charging and Controls - 2.7L V6 - TdV6, Diagnosis and Testing).<br>For injector circuit tests,<br>REFER to: Fuel Charging and Controls (303-04C Fuel Charging and Controls - 2.7L V6 - TdV6, Diagnosis and Testing). |
| Rough idle | • Low/contaminated fuel<br>• Blocked fuel filter<br>• Low pressure circuit fault<br>• FVCV blocked/contaminated<br>• FPCV blocked/contaminated<br>• Injector(s) failure | Check the fuel level/condition,<br>REFER to: Fuel Charging and Controls (303-04C Fuel Charging and Controls - 2.7L V6 - TdV6, Diagnosis and Testing).<br>Check the fuel filter,<br>REFER to: Fuel Filter - 2.7L V6 - TdV6 (310-01 Fuel Tank and Lines, Removal and Installation).<br>Check the low-pressure fuel lines for connection/damage/leaks. Check the FVCV and FPCV,<br>REFER to: Fuel Charging and Controls (303-04C Fuel Charging and Controls - 2.7L V6 - TdV6, Diagnosis and Testing).<br>For injector circuit tests,<br>REFER to: Fuel Charging and Controls (303-04C Fuel Charging and Controls - 2.7L V6 - TdV6, Diagnosis and Testing). |
| Lack of power when accelerating | • Air intake circuit fault<br>• Catalyst blocked<br>• Low fuel pressure<br>• EGR valve fault<br>• Turbocharger fault | For air intake tests,<br>REFER to: Intake Air Distribution and Filtering (303-12C Intake Air Distribution and Filtering - 2.7L V6 - TdV6, Diagnosis and Testing).<br>For catalyst checks,<br>REFER to: Exhaust System - VIN Range: M45255->N13088 (309-00 Exhaust System, Diagnosis and Testing).<br>For fuel pressure tests,<br>REFER to: Fuel Charging and Controls (303-04C Fuel Charging and Controls - 2.7L V6 - TdV6, Diagnosis and Testing).<br>For EGR tests,<br>REFER to: Engine Emission Control (303-08B Engine Emission Control - 2.7L V6 - TdV6, Diagnosis and Testing).<br>For turbocharger tests,<br>REFER to: Turbocharger (303-04D Fuel Charging and Controls - Turbocharger - 2.7L V6 - TdV6, Diagnosis and Testing). |
| Engine stops/stalls | • Low/contaminated fuel<br>• Blocked fuel filter<br>• Low pressure circuit fault<br>• FVCV blocked/contaminated<br>• FPCV blocked/contaminated | Check the fuel level/condition,<br>REFER to: Fuel Charging and Controls (303-04C Fuel Charging and Controls - 2.7L V6 - TdV6, Diagnosis and Testing).<br>Check the fuel filter,<br>REFER to: Fuel Filter - 2.7L V6 - TdV6 (310-01 Fuel Tank and Lines, Removal and Installation).<br>Check the low-pressure fuel lines for connection/damage/leaks. Check the FVCV |

GETTHEMANUALS.org

| Symptom | Possible source | Action |
|---|---|---|
| | • High pressure leak | and FPCV,<br>REFER to: Fuel Charging and Controls (303-04C Fuel Charging and Controls - 2.7L V6 - TdV6, Diagnosis and Testing).<br>Check the high-pressure fuel lines for leaks,<br>REFER to: Fuel Charging and Controls (303-04C Fuel Charging and Controls - 2.7L V6 - TdV6, Diagnosis and Testing). |
| Engine judders | • Low/contaminated fuel<br>• Low pressure circuit fault<br>• FVCV blocked/contaminated<br>• FPCV blocked/contaminated<br>• High pressure leak<br>• Pump fault | Check the fuel level/condition,<br>REFER to: Fuel Charging and Controls (303-04C Fuel Charging and Controls - 2.7L V6 - TdV6, Diagnosis and Testing).<br>Check the low-pressure fuel lines for connection/damage/leaks, check the FVCV and FPCV,<br>REFER to: Fuel Charging and Controls (303-04C Fuel Charging and Controls - 2.7L V6 - TdV6, Diagnosis and Testing).<br>Check the high-pressure fuel lines for leaks,<br>REFER to: Fuel Charging and Controls (303-04C Fuel Charging and Controls - 2.7L V6 - TdV6, Diagnosis and Testing).<br>Check the high-pressure pump,<br>REFER to: Fuel Injection Pump (303-04C Fuel Charging and Controls - 2.7L V6 - TdV6, Removal and Installation). |
| Excessive fuel consumption | • Low pressure circuit fault<br>• Fuel temperature sensor leak<br>• High pressure leak<br>• Injector(s) failure | Check the low-pressure fuel lines for connection/damage/leaks. Check the fuel temperature sensor,<br>REFER to: Fuel Temperature Sensor (303-14C Electronic Engine Controls - 2.7L V6 - TdV6, Removal and Installation).<br>Check the high-pressure fuel lines for leaks. For injector circuit tests,<br>REFER to: Fuel Charging and Controls (303-04C Fuel Charging and Controls - 2.7L V6 - TdV6, Diagnosis and Testing). |

## DTC index

| DTC | Symptom | Possible cause | Action |
|---|---|---|---|
| P0460 | Fuel level sensor | • Fuel level sensor fault<br>• Fuel level sensor circuit A fault<br>• Instrument cluster fault | |
| P0461 | Fuel level sensor range/performance | • Fuel level sensor fault<br>• Fuel level sensor circuit A fault<br>• Instrument cluster fault | |
| P0627 | Lift pump | • Electric lift pump relay<br>• Secondary side diagnostics | |
| P0628 | Fuel pump control circuit | • Fuel pump control circuit: short circuit to ground | |
| P0629 | Fuel pump control circuit | • Fuel pump control circuit: open load | |
| P115A | Low fuel level - forced limited power | • Fuel reserve signal range | Low fuel level. If there is sufficient fuel, check for level sensor fault codes. |
| P115B | Low fuel level - forced engine shut-down | • Anti air suction intervention | Low fuel level. If there is sufficient fuel, check for level sensor fault codes. |
| P1933 | Fuel level signal | • CAN signal | |

GETtheMANUALS.org

# Fuel Tank and Lines - Fuel FilterV8 4.2L Petrol/V8 S/C 4.2L Petrol/2.5L NA V6 - AJV6/3.0L NA V6 - AJ27

Removal and Installation

## Removal

**1.** WARNINGS:

Place the vehicle in a quarantined area and arrange "No Smoking/Petrol Fumes" signs about the vehicle.

Before any work is carried out on the fuel system, ground the vehicle to earth and maintain the ground connection until the work is complete.

Do not smoke or carry lighted tobacco or open flame of any type when working on or near any fuel related components. Highly flammable vapors are always present and may ignite. Failure to follow these instructions may result in personal injury.

The fuel system remains pressurized for a long time after the ignition is switched off. The fuel pressure must be relieved before attempting any repairs. Failure to follow these instructions may result in personal injury.

After carrying out repairs, the fuel system must be checked visually for leaks. Failure to follow these instructions may result in personal injury.

This procedure involves fuel handling. Be prepared for fuel spillage at all times and always observe fuel handling precautions. Failure to follow these instructions may result in personal injury.

If taken internally do not induce vomiting, seek immediate medical attention. Failure to follow these instructions may result in personal injury.

If fuel contacts the eyes, flush the eyes with cold water or eyewash solution and seek medical attention.

Wash hands thoroughly after handling, as prolonged contact may cause irritation. Should irritation develop, seek medical attention.

Disconnect the battery ground cable.

De-pressurize the fuel system.
For additional information, refer to Section 310-00 Fuel System - General Information.

**2.** Raise and support the vehicle. For additional information, refer to Section 100-02 Jacking and Lifting.

**3.** Detach the left-hand front fender splash shield.

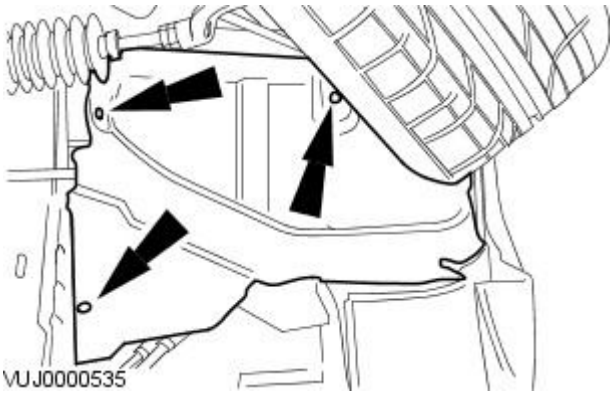


GETtheMANUALS.org

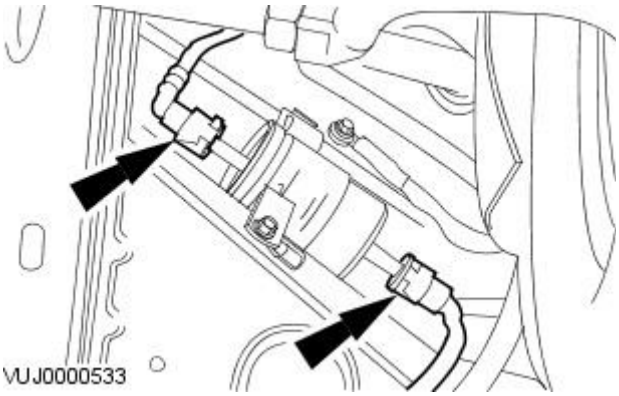


**4.** Disconnect the fuel lines. For additional information, refer to Section 310-00 Fuel System - General Information.

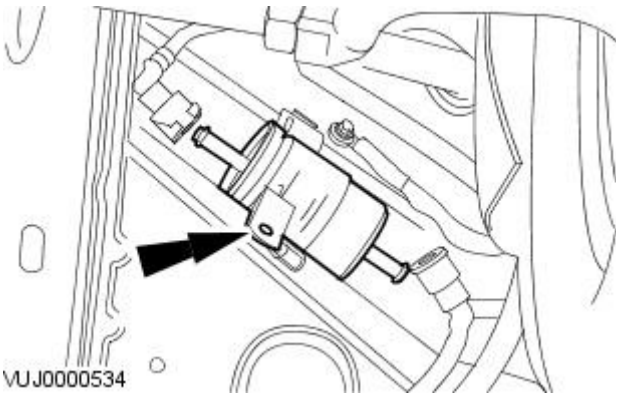


**5.** Loosen the fuel filter bracket retaining bolt.

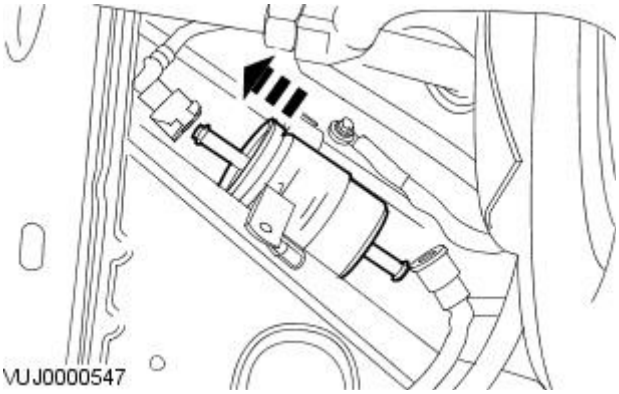


**6.** NOTE: Observe the direction of the fuel filter fuel flow arrow.

Remove the fuel filter.

## Installation

**1.** To install, reverse the removal procedure.

GETtheMANUALS.org

# Fuel Tank and Lines - Fuel Filter2.7L V6 - TdV6

Removal and Installation

## Removal

• WARNINGS:

Do not smoke or carry lighted tobacco or open flame of any type when working on or near any fuel related components. Highly flammable mixtures are always present and can ignite. Failure to follow these instructions may result in personal injury.

This procedure involves fuel handling. Be prepared for fuel spillage at all times and always observe fuel handling precautions. Failure to follow these instructions may result in personal injury.

• CAUTIONS:

Diesel fuel injection equipment is manufactured to very precise tolerances and fine clearances. It is therefore essential that absolute cleanliness is observed when working with these components. Always fit blanking plugs to any open orifices or lines.

Make sure the fuel lines are connected to the correct fuel line connector on the fuel filter. Failure to follow these instructions may result in damage to the engine or fuel injection system.

Always carry out the cleaning process before carrying out any repairs to the fuel injection system components. Failure to follow these instructions may result in foreign matter ingress to the fuel injection system.

• NOTE: Note the position of the fuel lines before removal from the fuel filter.

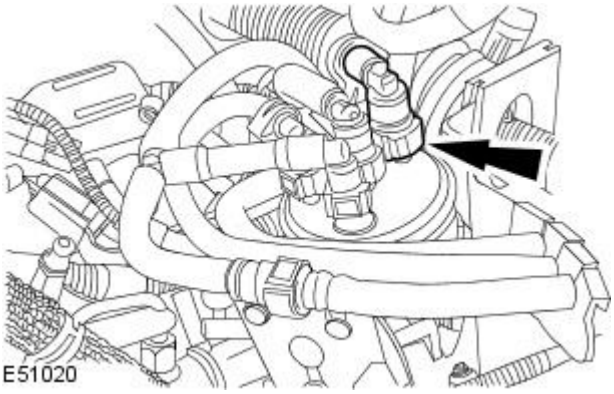


1. Disconnect the fuel tank to fuel filter supply line from the fuel filter.
   For additional information, refer to: Quick Release Coupling - Push Connect (310-00 Fuel System - General Information, General Procedures).

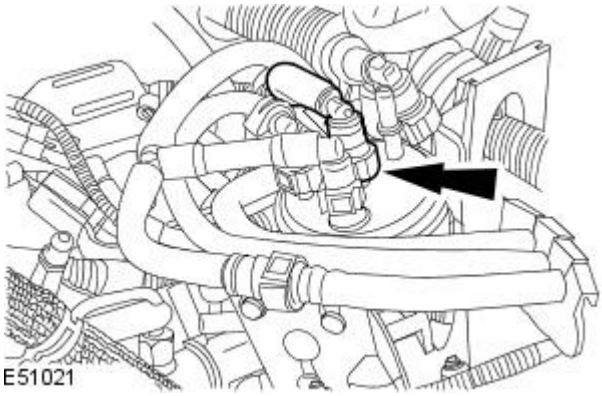


2. Disconnect the fuel filter to fuel pump supply line from the fuel filter.
   For additional information, refer to: Quick Release Coupling - Push Connect (310-00 Fuel System - General Information, General Procedures).
   - Install a blanking plug to the fuel pump fuel supply line.

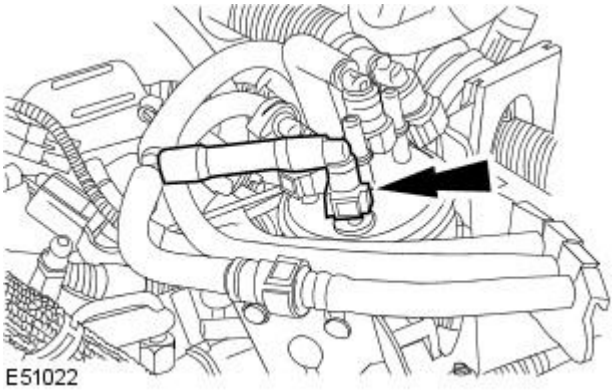


3. Disconnect the fuel pump to fuel filter fuel return line from the fuel filter.
   For additional information, refer to: Quick Release Coupling - Push Connect (310-00 Fuel System - General Information, General Procedures).

GETtheMANUALS.org

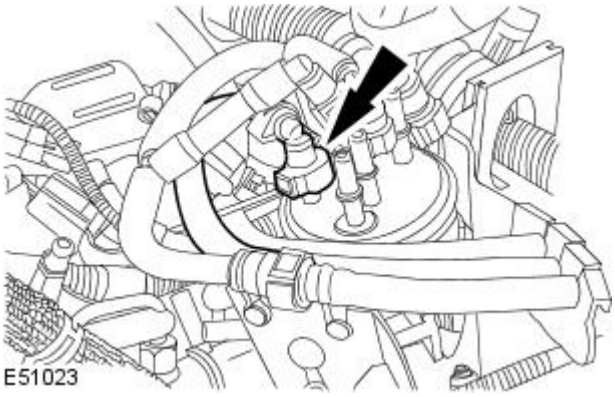


**4.** Disconnect the fuel pump to fuel filter fuel return line from the fuel filter.
For additional information, refer to: Quick Release Coupling - Push Connect (310-00 Fuel System - General Information, General Procedures).

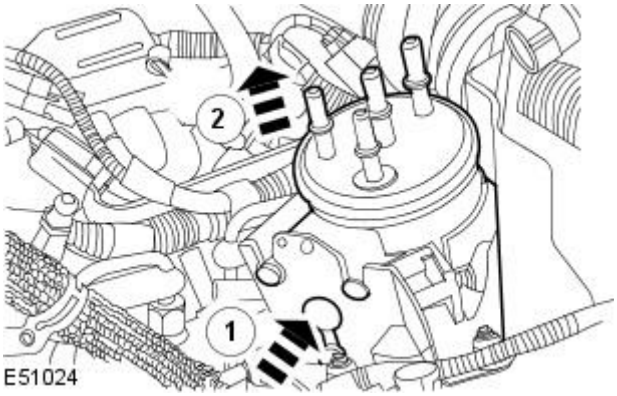


**5.** Remove the fuel filter.

1. Press the fuel filter retaining tang.
2. Remove the fuel filter.

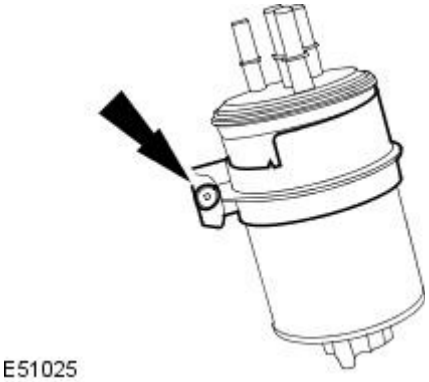


**6.** Remove the fuel filter from the retaining bracket.

## Installation

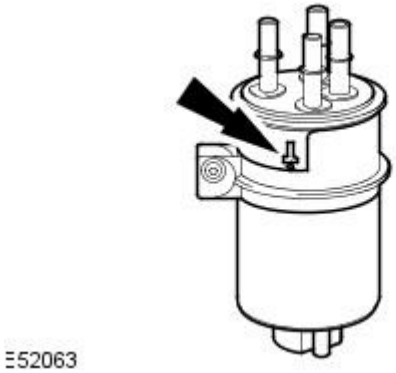


**1.** WARNINGS:

Do not smoke or carry lighted tobacco or open flame of any type when working on or near any fuel related components. Highly flammable mixtures are always present and can ignite. Failure to follow these instructions may result in personal injury.

This procedure involves fuel handling. Be prepared for fuel spillage at all times and always observe fuel handling precautions. Failure to follow these instructions may result in personal injury.

• CAUTIONS:

Diesel fuel injection equipment is manufactured to very precise tolerances and fine clearances. It is therefore essential that absolute cleanliness is observed when working with these components. Always fit blanking plugs to any open orifices or lines.

Make sure the fuel lines are connected to the correct fuel line connector on the fuel filter. Failure to follow these instructions may result in damage to the engine or fuel injection system.

• NOTE: Make sure the fuel filter and fuel filter retaining bracket alignment marks align.

Install the fuel filter to the retaining bracket.

GETtheMANUALS.org

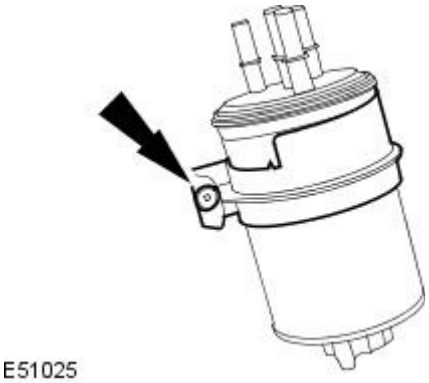


**2.** Tighten to 7 Nm.

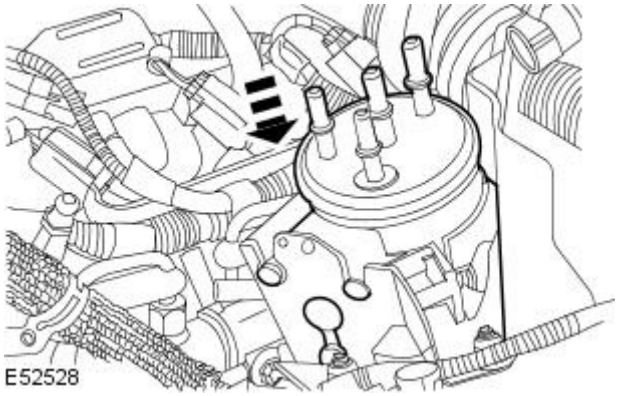


**3.** Install the fuel filter.

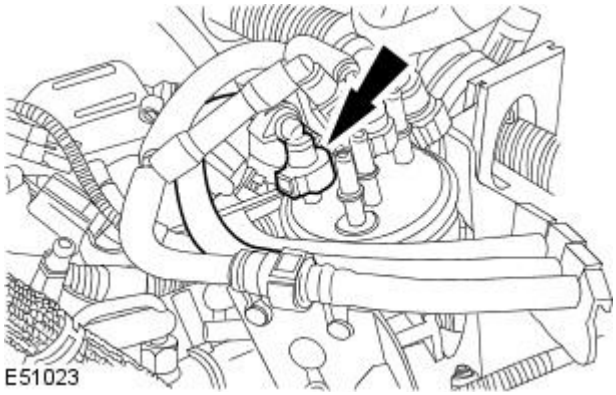


**4.** Connect the fuel pump to fuel filter fuel return line to the fuel filter. For additional information, refer to: Quick Release Coupling - Push Connect (310-00 Fuel System - General Information, General Procedures).

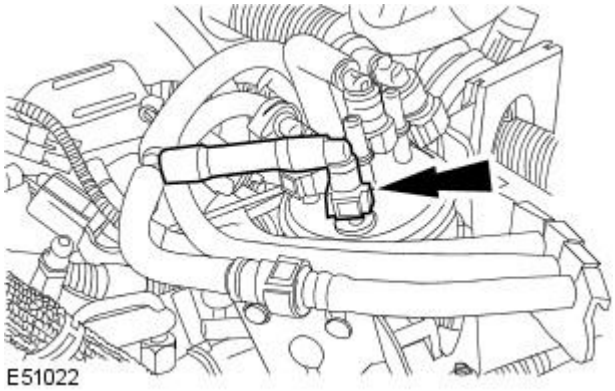


**5.** Connect the fuel pump to fuel filter fuel return line to the fuel filter. For additional information, refer to: Quick Release Coupling - Push Connect (310-00 Fuel System - General Information, General Procedures).

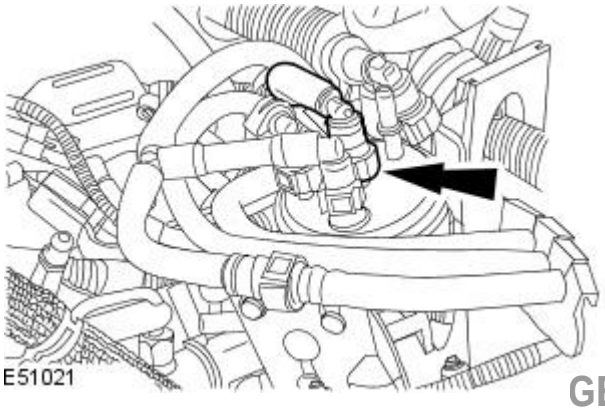


**6.** Connect the fuel pump to fuel filter fuel supply line to the filter. For additional information, refer to: Quick Release Coupling - Push Connect (310-00 Fuel System - General Information, General Procedures).

- Remove the blanking plug.

GETtheMANUALS.org

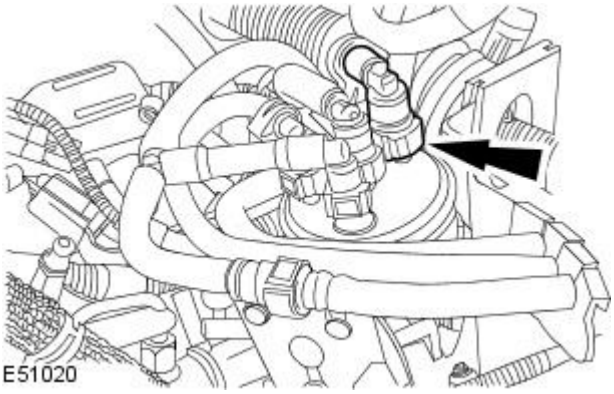


7. Connect the fuel tank to fuel filter fuel supply line to the fuel filter.
   For additional information, refer to: Quick Release Coupling - Push Connect (310-00 Fuel System - General Information, General Procedures).

8. Bleed the low pressure fuel system.
   For additional information, refer to: Low-Pressure Fuel System Bleeding (310-00 Fuel System - General Information, General Procedures).

GETtheMANUALS.org

# Fuel Tank and Lines - Fuel Level Sender LHV8 4.2L Petrol/V8 S/C 4.2L Petrol/2.5L NA V6 - AJV6/3.0L NA V6 - AJ27, VIN Range: M45255->N52047

Removal and Installation

## Removal

• WARNINGS:

Do not smoke or carry lighted tobacco or an open flame of any type when working on or near any fuel related components. Highly flammable vapors are always present and may ignite. Failure to follow these instructions may result in personal injury.

Do not carry or operate cellular phones when working on or near any fuel related components. Highly flammable vapors are always present and may ignite. Failure to follow these instructions may result in personal injury.

This procedure involves fuel handling. Be prepared for fuel spillage at all times and always observe fuel handling precautions. Failure to follow these instructions may result in personal injury.

1. Remove the transfer pump.
   For additional information, refer to: Fuel Transfer Pump - V8 4.2L Petrol/V8 S/C 4.2L Petrol/2.5L NA V6 - AJV6/3.0L NA V6 - AJ27, VIN Range: M45255->N52047 (310-01 Fuel Tank and Lines, Removal and Installation).
2. Disconnect the fuel level sender electrical connector.

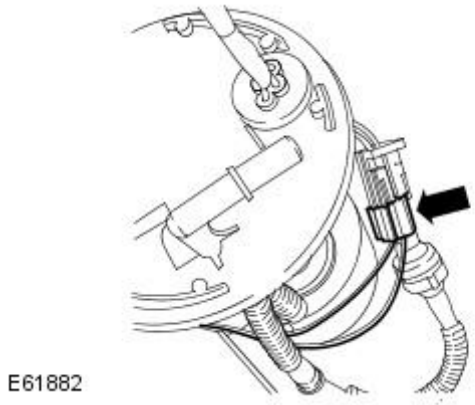


3. Remove the fuel level sender and harness.

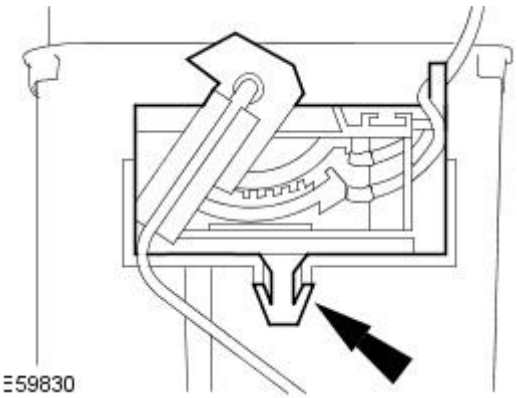


## Installation

• WARNINGS:

Do not smoke or carry lighted tobacco or an open flame of any type when working on or near any fuel related components. Highly flammable vapors are always present and may ignite. Failure to follow these instructions may result in personal injury.

Do not carry or operate cellular phones when working on or near any fuel related components. Highly flammable vapors are always present and may ignite. Failure to follow these instructions may result in personal injury.

This procedure involves fuel handling. Be prepared for fuel spillage at all times and always observe fuel handling precautions. Failure to follow these instructions may result in personal injury.

1. To install, reverse the removal procedure.

GETtheMANUALS.org

# Fuel Tank and Lines - Fuel Level Sender LHV8 4.2L Petrol/V8 S/C 4.2L Petrol/2.5L NA V6 - AJV6/3.0L NA V6 - AJ27, VIN Range: N52048->N99999

Removal and Installation

## Removal

• WARNINGS:

Do not smoke or carry lighted tobacco or an open flame of any type when working on or near any fuel related components. Highly flammable vapors are always present and may ignite. Failure to follow these instructions may result in personal injury.

Do not carry or operate cellular phones when working on or near any fuel related components. Highly flammable vapors are always present and may ignite. Failure to follow these instructions may result in personal injury.

This procedure involves fuel handling. Be prepared for fuel spillage at all times and always observe fuel handling precautions. Failure to follow these instructions may result in personal injury.

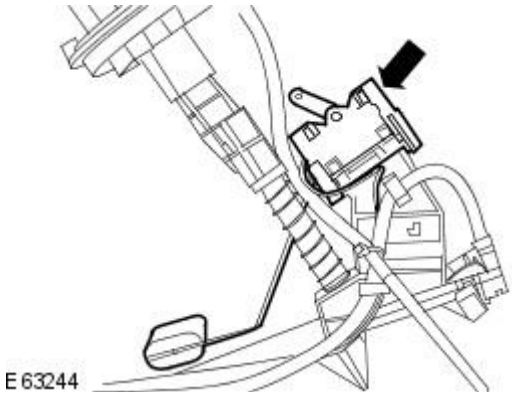


1. Remove the fuel transfer unit.
   For additional information, refer to: Fuel Transfer Unit - V8 4.2L Petrol/V8 S/C 4.2L Petrol/2.5L NA V6 - AJV6/3.0L NA V6 - AJ27, VIN Range: N52048->N99999 (310-01 Fuel Tank and Lines, Removal and Installation).
2. Remove the fuel level sender and harness.
   - Remove and discard the fuel level sender harness tie straps.

## Installation

• WARNINGS:

Do not smoke or carry lighted tobacco or an open flame of any type when working on or near any fuel related components. Highly flammable vapors are always present and may ignite. Failure to follow these instructions may result in personal injury.

Do not carry or operate cellular phones when working on or near any fuel related components. Highly flammable vapors are always present and may ignite. Failure to follow these instructions may result in personal injury.

This procedure involves fuel handling. Be prepared for fuel spillage at all times and always observe fuel handling precautions. Failure to follow these instructions may result in personal injury.

1. To install, reverse the removal procedure.

GETtheMANUALS.org

# Fuel Tank and Lines - Fuel Level Sender RHV8 4.2L Petrol/V8 S/C 4.2L Petrol/2.5L NA V6 - AJV6/3.0L NA V6 - AJ27, VIN Range: M45255->N52047

Removal and Installation

## Removal

• WARNINGS:

Do not smoke or carry lighted tobacco or an open flame of any type when working on or near any fuel related components. Highly flammable vapors are always present and may ignite. Failure to follow these instructions may result in personal injury.

Do not carry or operate cellular phones when working on or near any fuel related components. Highly flammable vapors are always present and may ignite. Failure to follow these instructions may result in personal injury.

This procedure involves fuel handling. Be prepared for fuel spillage at all times and always observe fuel handling precautions. Failure to follow these instructions may result in personal injury.

1. Remove the fuel pump module.
   For additional information, refer to: Fuel Pump Module - V8 4.2L Petrol/V8 S/C 4.2L Petrol/2.5L NA V6 - AJV6/3.0L NA V6 - AJ27, VIN Range: M45255->N52047 (310-01 Fuel Tank and Lines, Removal and Installation).
2. Disconnect the fuel level sender electrical connector.

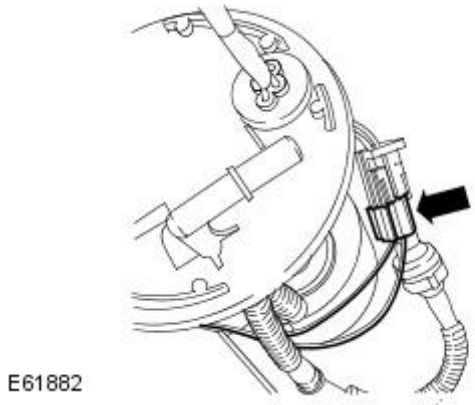


3. Remove the fuel level sender and harness.

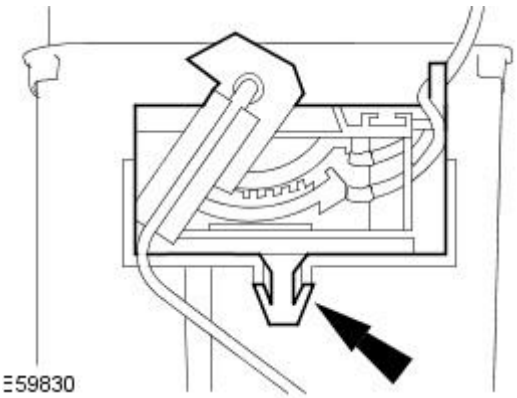


## Installation

• WARNINGS:

Do not smoke or carry lighted tobacco or an open flame of any type when working on or near any fuel related components. Highly flammable vapors are always present and may ignite. Failure to follow these instructions may result in personal injury.

Do not carry or operate cellular phones when working on or near any fuel related components. Highly flammable vapors are always present and may ignite. Failure to follow these instructions may result in personal injury.

This procedure involves fuel handling. Be prepared for fuel spillage at all times and always observe fuel handling precautions. Failure to follow these instructions may result in personal injury.

1. To install, reverse the removal procedure.

GETtheMANUALS.org

# Fuel Tank and Lines - Fuel Level Sender RHV8 4.2L Petrol/V8 S/C 4.2L Petrol/2.5L NA V6 - AJV6/3.0L NA V6 - AJ27, VIN Range: N52048->N99999

Removal and Installation

## Removal

• WARNINGS:

Do not smoke or carry lighted tobacco or an open flame of any type when working on or near any fuel related components. Highly flammable vapors are always present and may ignite. Failure to follow these instructions may result in personal injury.

Do not carry or operate cellular phones when working on or near any fuel related components. Highly flammable vapors are always present and may ignite. Failure to follow these instructions may result in personal injury.

This procedure involves fuel handling. Be prepared for fuel spillage at all times and always observe fuel handling precautions. Failure to follow these instructions may result in personal injury.

1. Remove the fuel pump module.
   For additional information, refer to: Fuel Pump Module - V8 4.2L Petrol/V8 S/C 4.2L Petrol/2.5L NA V6 - AJV6/3.0L NA V6 - AJ27, VIN Range: M45255->N52047 (310-01 Fuel Tank and Lines, Removal and Installation).
2. Disconnect the fuel pump module electrical connector.

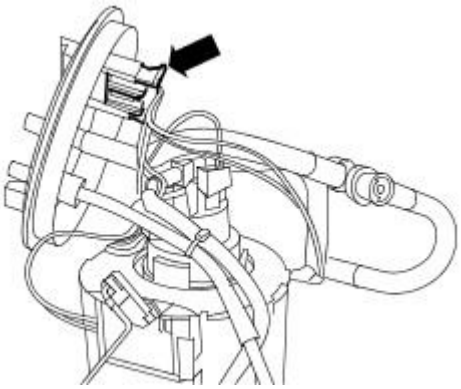

E63239

3. Disconnect the fuel level sender electrical connector.

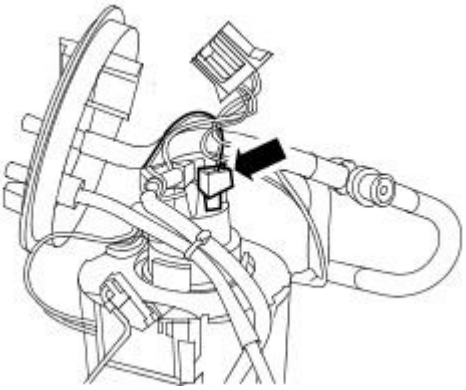

E63240

4. Disconnect the fuel level sender electrical connector.

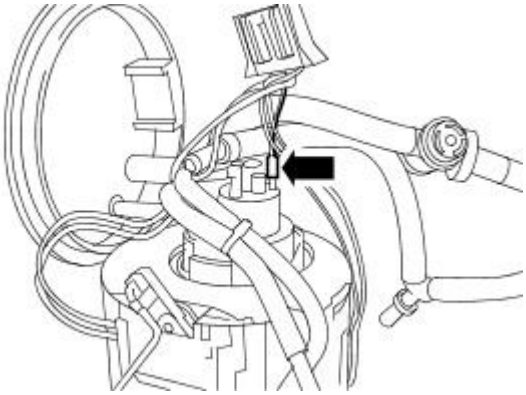

E63241

GETtheMANUALS.org

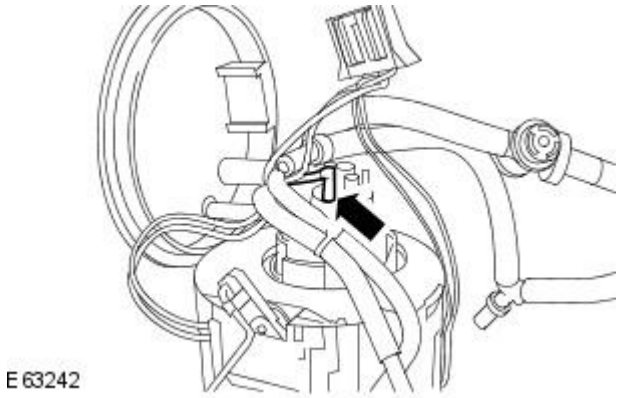


**5.** Disconnect the fuel level sender electrical connector.

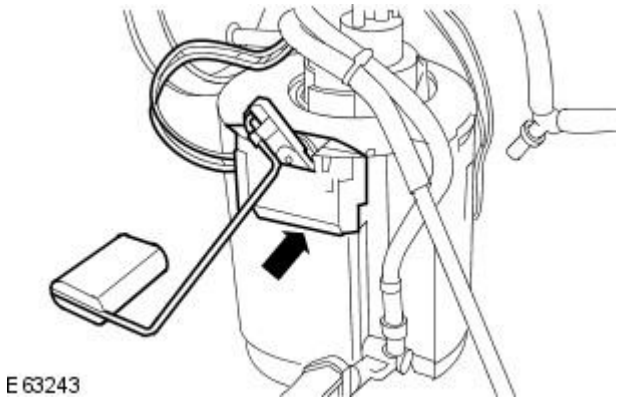


**6.** Remove the fuel level sender and harness.

## Installation

• WARNINGS:

Do not smoke or carry lighted tobacco or an open flame of any type when working on or near any fuel related components. Highly flammable vapors are always present and may ignite. Failure to follow these instructions may result in personal injury.

Do not carry or operate cellular phones when working on or near any fuel related components. Highly flammable vapors are always present and may ignite. Failure to follow these instructions may result in personal injury.

This procedure involves fuel handling. Be prepared for fuel spillage at all times and always observe fuel handling precautions. Failure to follow these instructions may result in personal injury.

**1.** To install, reverse the removal procedure.

GETtheMANUALS.org

# Fuel Tank and Lines - Fuel Pump ModuleV8 4.2L Petrol/V8 S/C 4.2L Petrol/2.5L NA V6 - AJV6/3.0L NA V6 - AJ27, VIN Range: M45255->N52047

Removal and Installation

| Special Tool(s) | |
|---|---|
| | Remover/Installer, Fuel Pump Module/Fuel Transfer Pump Locking Ring<br><br>310-146 |

## Removal

**1.** WARNINGS:

Place the vehicle in a quarantined area and arrange "No Smoking/Petrol Fumes" signs about the vehicle.

Before any work is carried out on the fuel system, ground the vehicle to earth and maintain the ground connection until the work is complete.

Do not smoke or carry lighted tobacco or open flame of any type when working on or near any fuel related components. Highly flammable vapors are always present and may ignite. Failure to follow these instructions may result in personal injury.

The fuel system remains pressurized for a long time after the ignition is switched off. The fuel pressure must be relieved before attempting any repairs. Failure to follow these instructions may result in personal injury.

After carrying out repairs, the fuel system must be checked visually for leaks. Failure to follow these instructions may result in personal injury.

This procedure involves fuel handling. Be prepared for fuel spillage at all times and always observe fuel handling precautions. Failure to follow these instructions may result in personal injury.

If taken internally do not induce vomiting, seek immediate medical attention. Failure to follow these instructions may result in personal injury.

If fuel contacts the eyes, flush the eyes with cold water or eyewash solution and seek medical attention.

Wash hands thoroughly after handling, as prolonged contact may cause irritation. Should irritation develop, seek medical attention.

- NOTE: For vehicles with worm drive clamp, refer to steps 14 and 24.
- NOTE: For vehicles with fuel pump locking ring, refer to steps 15 and 25.

Open the fuel tank filler pipe flap.

**2.** Disconnect the battery ground cable.

**3.** Detach the fuel tank filler pipe cap.

**4.** Release the pressure in the fuel system.
For additional information, refer to: Fuel System Pressure Release (310-00 Fuel System - General Information, General Procedures).

**5.** Remove the rear seat cushion.
For additional information, refer to: Rear Seat Cushion (501-10 Seating, Removal and Installation).

GETtheMANUALS.org

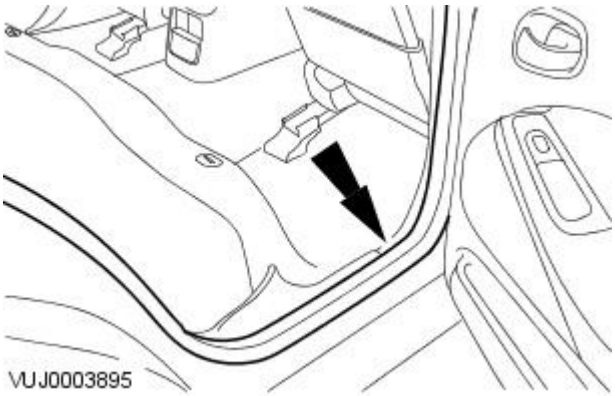


**6.** Detach and reposition the door opening weatherstrip.

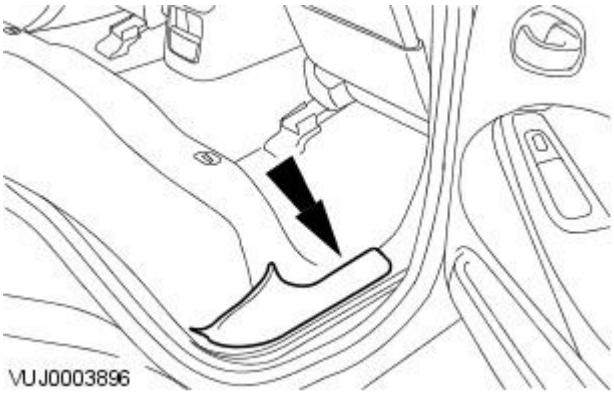


**7.** Remove the scuff plate trim panel.

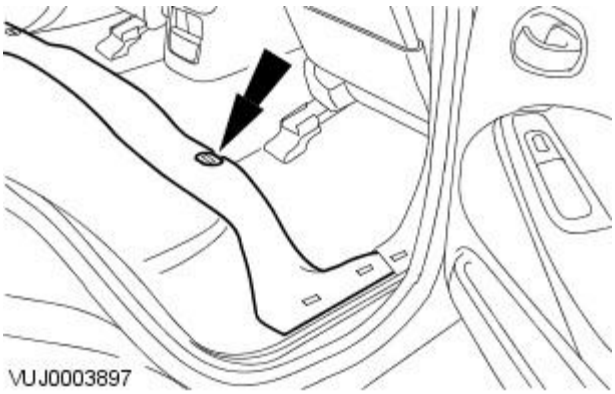


**8.** Detach and reposition the floor covering.

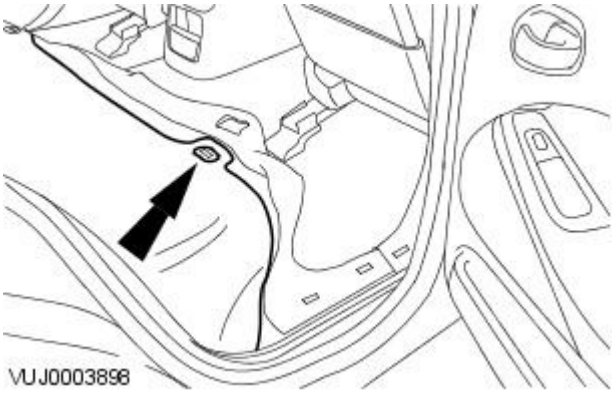


**9.** Detach and reposition the rear seat cushion insulation.

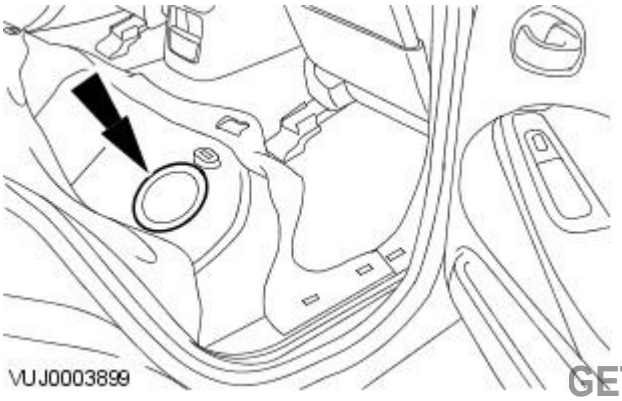


**10.** Remove the floor aperture cover.

GETtheMANUALS.org

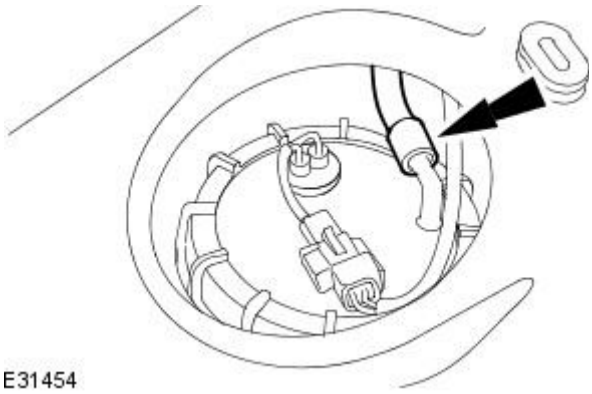


**11.** Disconnect the fuel pump module quick release coupling.

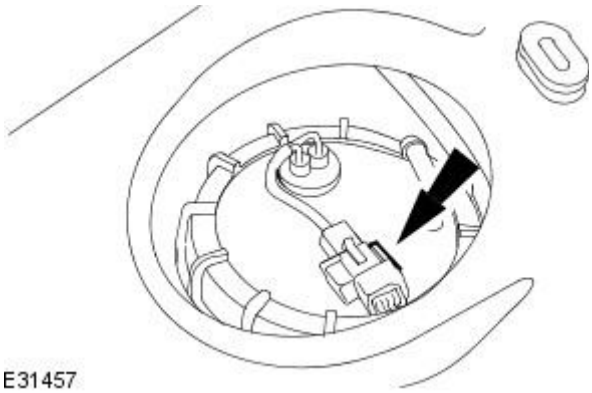


**12.** Detach the fuel pump module electrical connector from the retaining bracket.

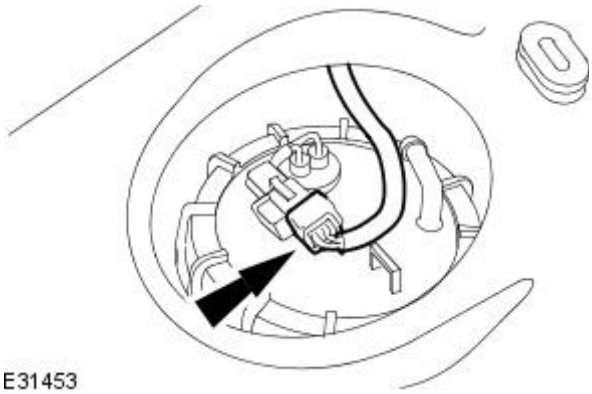


**13.** Disconnect the fuel pump module electrical connector.

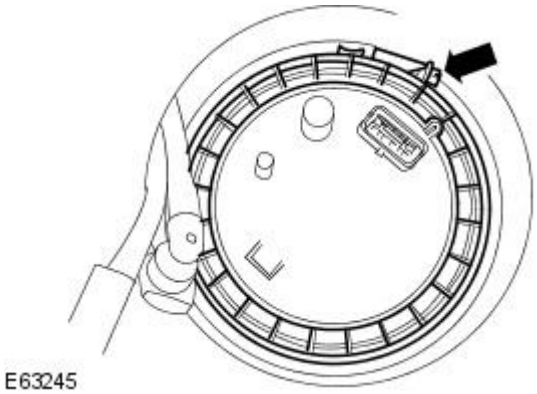


**14.** NOTE: For vehicles with worm drive clamp.

Remove and discard the fuel pump module worm drive clamp.

- Remove and discard the O-ring seal.

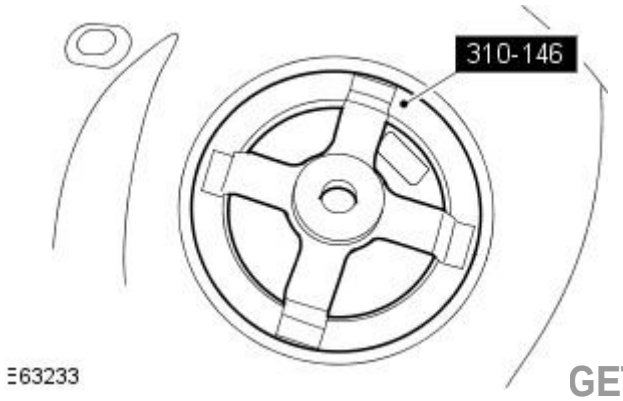


**15.** NOTE: For vehicles with fuel pump locking ring.

Using the special tool, remove the fuel transfer unit locking ring.

GETtheMANUALS.org

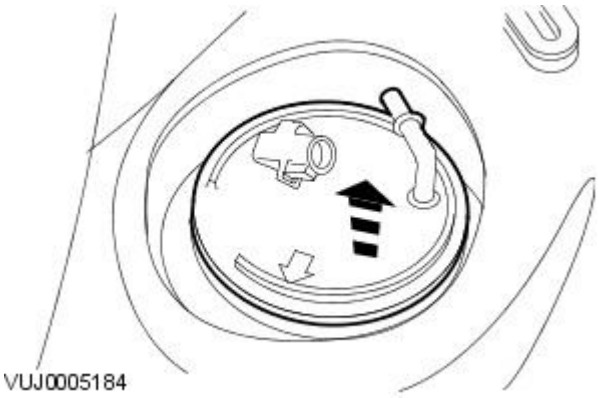


**16.** NOTE: All vehicles.

Detach and reposition the upper part of the fuel pump module.

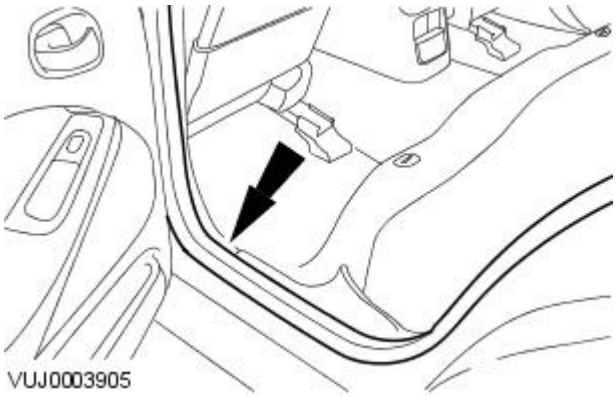


**17.** Detach and reposition the left-hand rear door opening weatherstrip.

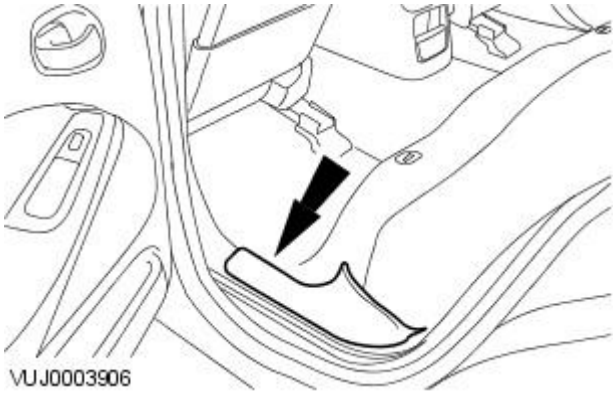


**18.** Remove the scuff plate trim panel.

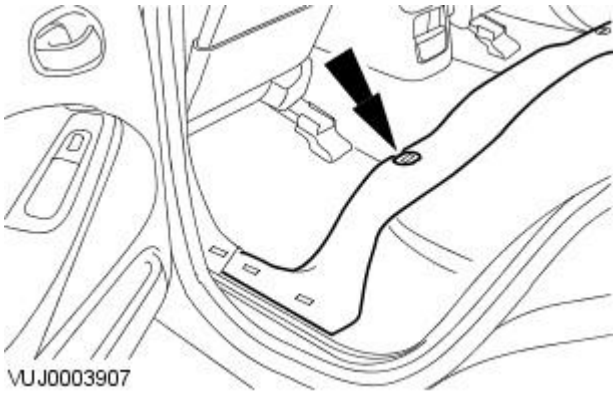


**19.** Detach and reposition the floor covering.

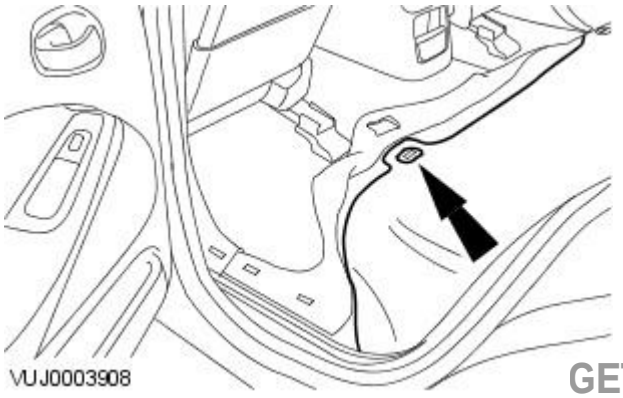


**20.** Detach and reposition the rear seat cushion insulation.

GETtheMANUALS.org

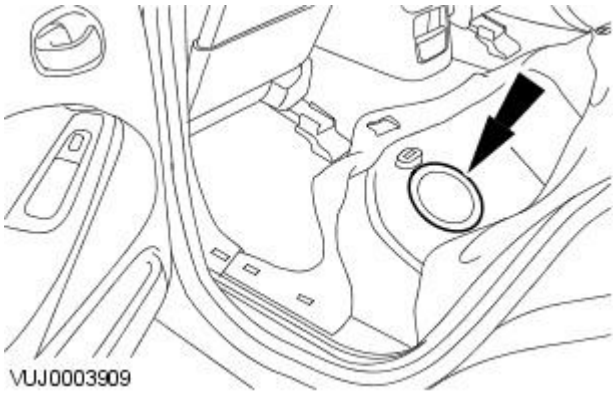


**21.** Remove the floor aperture cover.

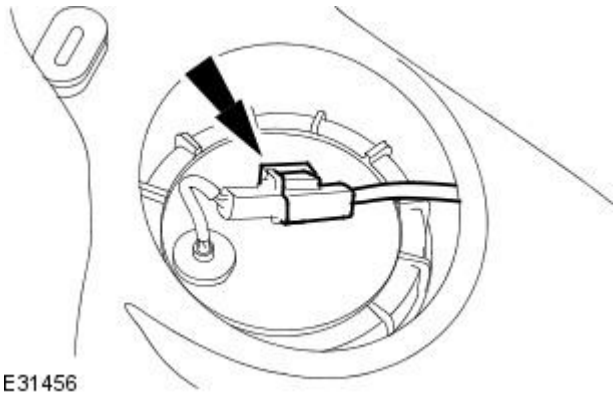


**22.** Detach the fuel transfer pump module electrical connector from the retaining bracket.

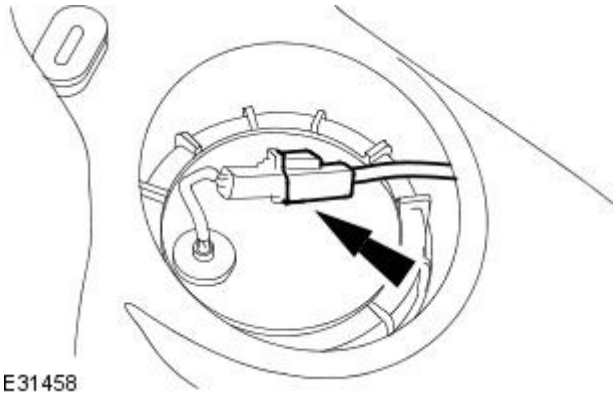


**23.** Disconnect the fuel transfer pump electrical connector.

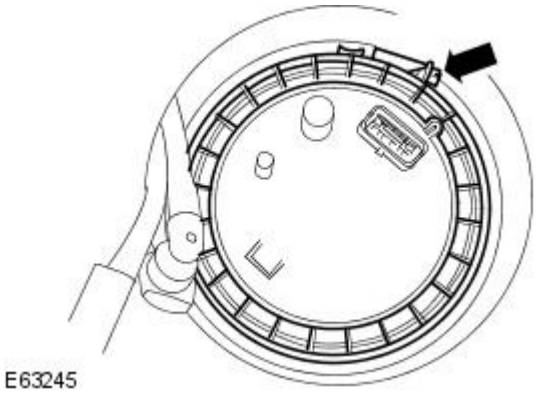


**24.** NOTE: For vehicles with worm drive clamp.

Remove and discard the fuel transfer unit worm drive clamp.

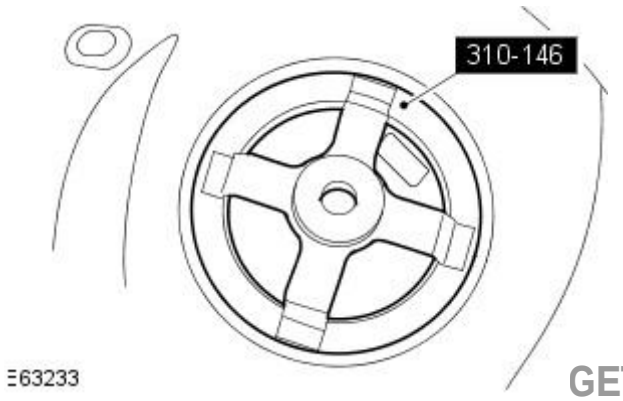


**25.** NOTE: For vehicles with fuel pump locking ring.

Using the special tool, remove the fuel transfer unit locking ring.

GETtheMANUALS.org

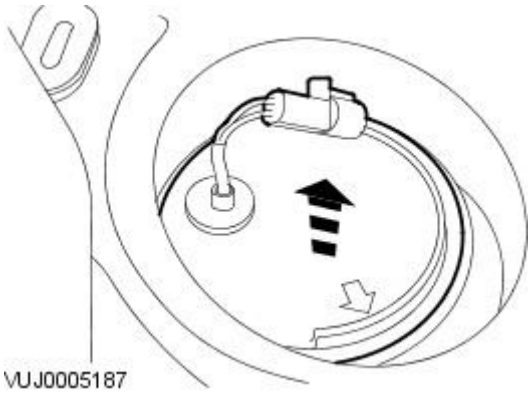


**26.** NOTE: All vehicles.

Detach and reposition the upper part of the fuel transfer pump.

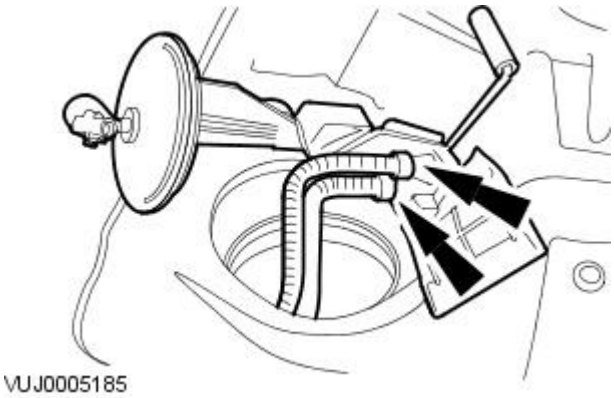


**27.** CAUTION: Make sure no damage occurs to the fuel level float.

Remove the fuel transfer pump.

- Disconnect the fuel cross over lines.

**28.** Remove and discard the fuel transfer pump module gasket.

**29.** Remove the fuel pump module.

- Remove and discard the fuel pump module gasket.

## Installation

• WARNINGS:

Place the vehicle in a quarantined area and arrange "No Smoking/Petrol Fumes" signs about the vehicle.

Before any work is carried out on the fuel system, ground the vehicle to earth and maintain the ground connection until the work is complete.

Do not smoke or carry lighted tobacco or open flame of any type when working on or near any fuel related components. Highly flammable vapors are always present and may ignite. Failure to follow these instructions may result in personal injury.

The fuel system remains pressurized for a long time after the ignition is switched off. The fuel pressure must be relieved before attempting any repairs. Failure to follow these instructions may result in personal injury.

After carrying out repairs, the fuel system must be checked visually for leaks. Failure to follow these instructions may result in personal injury.

This procedure involves fuel handling. Be prepared for fuel spillage at all times and always observe fuel handling precautions. Failure to follow these instructions may result in personal injury.

If taken internally do not induce vomiting, seek immediate medical attention. Failure to follow these instructions may result in personal injury.

If fuel contacts the eyes, flush the eyes with cold water or eyewash solution and seek medical attention.

Wash hands thoroughly after handling, as prolonged contact may cause irritation. Should irritation develop, seek medical attention.

• NOTE: For vehicles with fuel pump locking ring, refer to steps 2 and 13.

• NOTE: For vehicles with worm drive clamp, refer to steps 3 and 14.

GETtheMANUALS.org

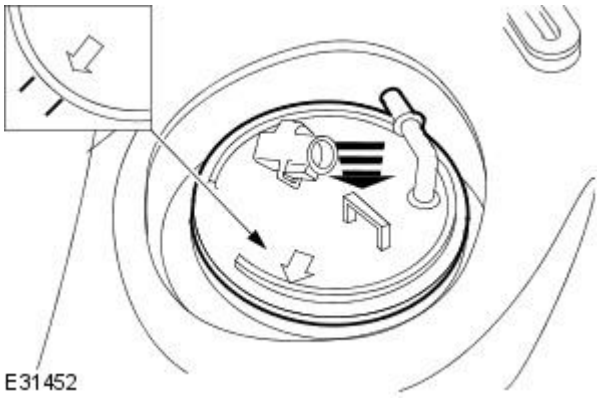


**1.** CAUTIONS:

On vehicles with supercharger make sure the arrow on the fuel pump module and the 'SC' marker on the fuel tank are aligned.

On vehicles without supercharger make sure the arrow on the fuel transfer module and the 'NA' marker on the fuel tank are aligned.

Make sure no damage occurs to the fuel level float.

• NOTE: Install a new gasket to the fuel pump module flange.

• NOTE: Take care not to stretch the gasket.

Install the fuel pump module.

1. Feed the fuel cross-over lines through the fuel pump module hole and across the front of the fuel tank saddle.

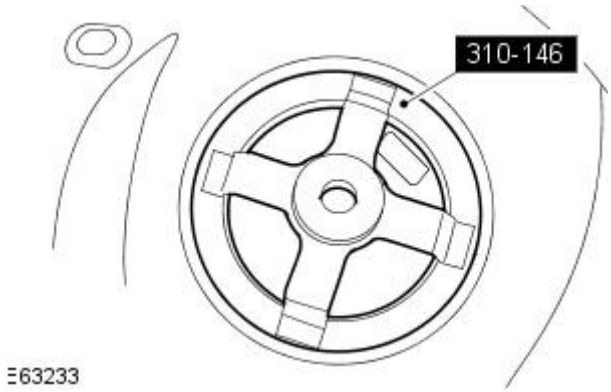


**2.** NOTE: For vehicles with fuel pump locking ring.

Using the special tool, install the fuel transfer unit locking ring.

- Tighten to 60 Nm.

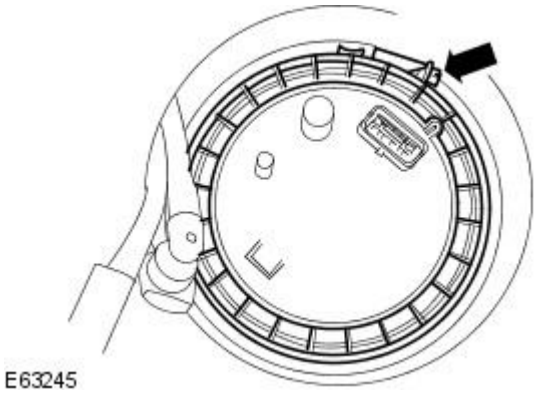


**3.** CAUTION: If the vehicle is fitted with a worm drive clamp which is not fitted with a shear off cap, tighten the clamp to 4Nm.

• NOTE: For vehicles with worm drive clamp.

Install the new fuel transfer unit worm drive clamp.

- Tighten the clamp until the cap shears off.

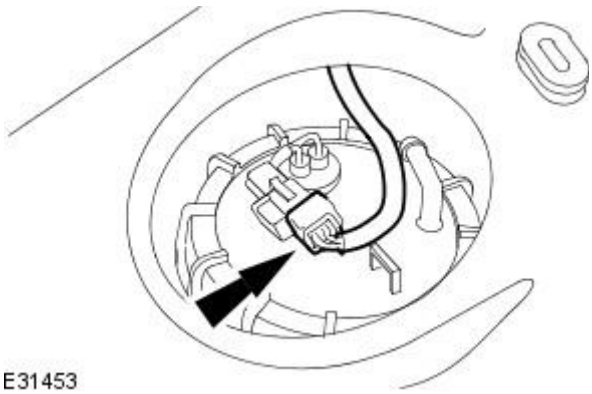


**4.** NOTE: All vehicles.

Connect the fuel pump module electrical connector.

GETtheMANUALS.org

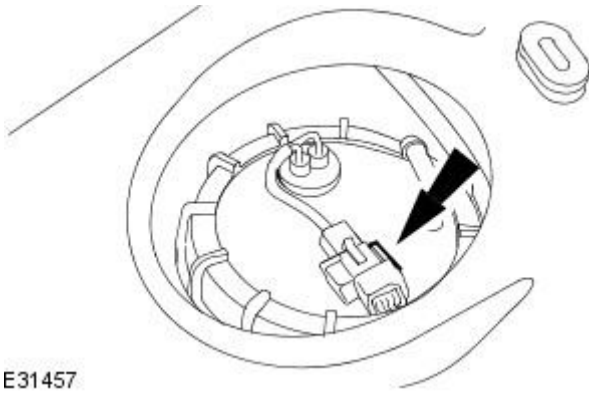


**5.** Attach the fuel pump module electrical connector to the retaining bracket.

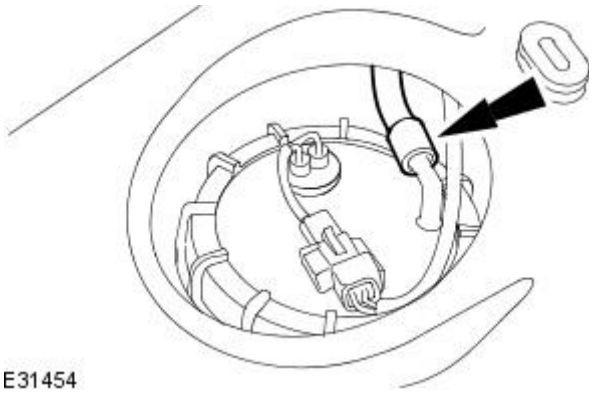


**6.** Connect the fuel pump module quick release coupling.

- Make sure the quick release coupling has latched onto the fuel pump module fuel pipe by pulling the pipe after the connection has been made.

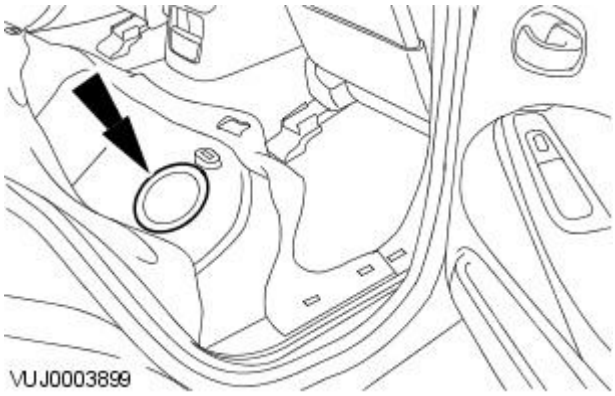


**7.** Install the floor aperture cover.

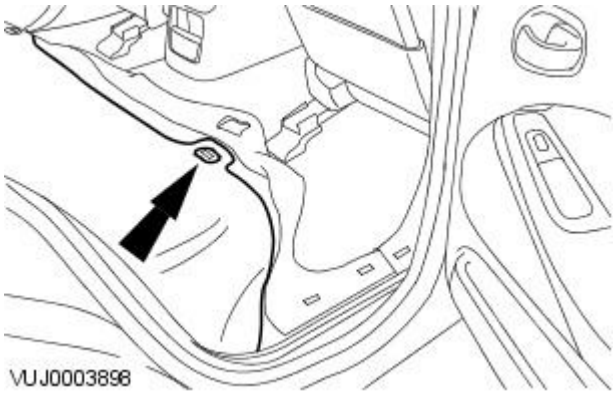


**8.** Attach the rear seat cushion insulation.

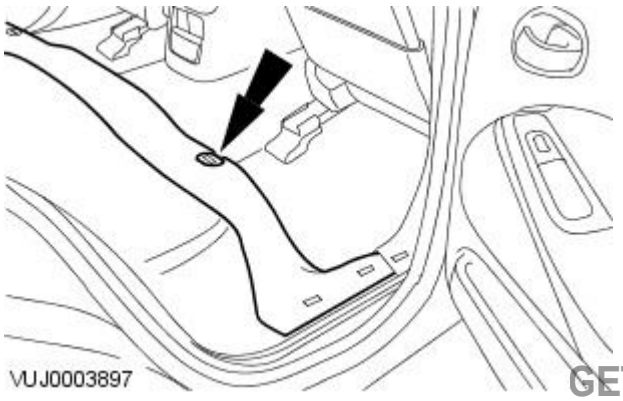


**9.** Attach the floor covering.

GETtheMANUALS.org

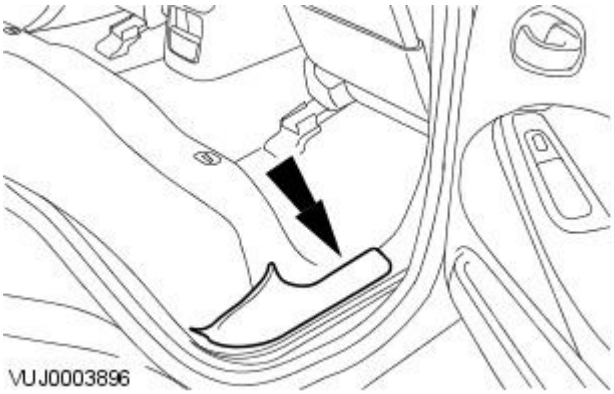


**10.** Install the scuff plate trim panel.

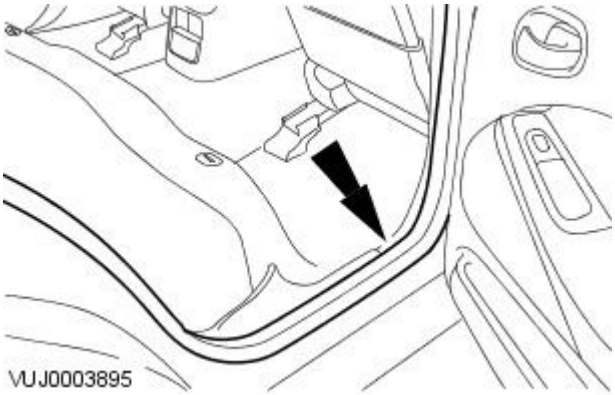


**11.** Attach the door opening weatherstrip.

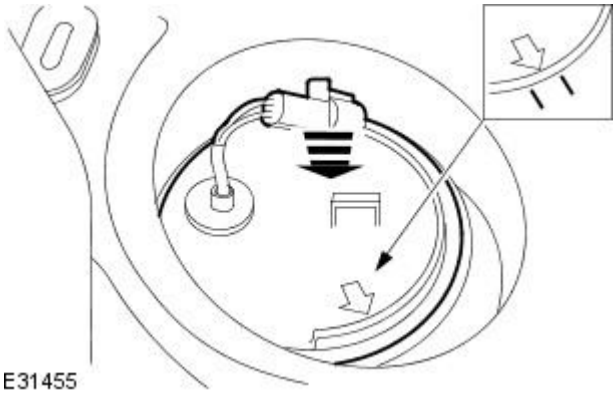


**12.** CAUTIONS:

Vehicles with supercharger - make sure the arrow on the left-hand fuel pump module lines up with the 'SC' marker on the fuel tank.

Vehicles without supercharger - make sure the arrow on the fuel transfer pump lines up with the 'NA' marker on the fuel tank.

Make sure no damage occurs to the fuel level float.

- NOTE: Install a new gasket to the fuel transfer pump flange.
- NOTE: Take care not to stretch the gasket.

Install the fuel transfer pump.

**13.** NOTE: For vehicles with fuel pump locking ring.

Using the special tool, install the fuel transfer unit locking ring.

- Tighten to 60 Nm.

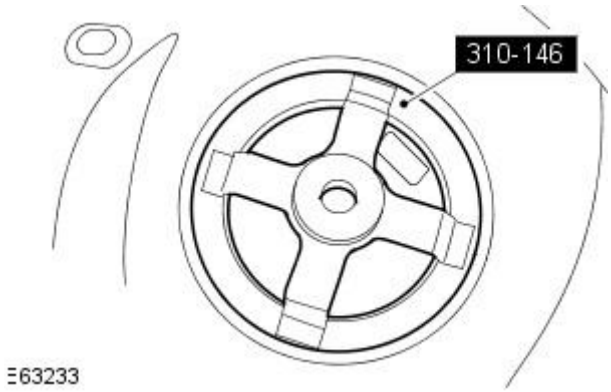


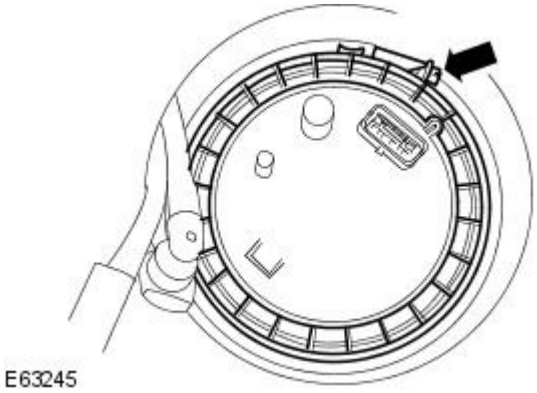


**14.** CAUTION: If the vehicle is fitted with a worm drive clamp which is not fitted with a shear off cap, tighten the clamp to 4Nm.

- NOTE: For vehicles with worm drive clamp.

Install the new fuel transfer unit worm drive clamp.

- Tighten the clamp until the cap shears off.

GETtheMANUALS.org

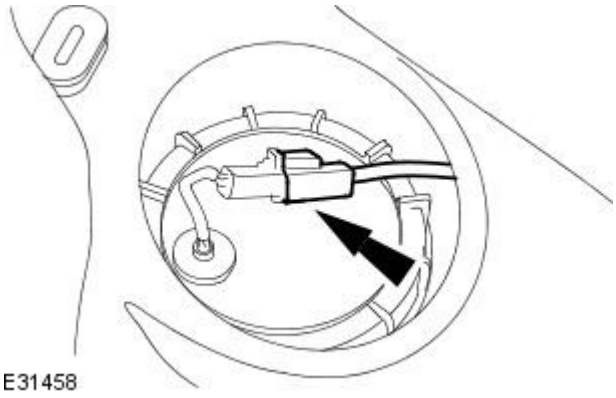


**15.** NOTE: All vehicles.

Connect the fuel transfer pump electrical connector.

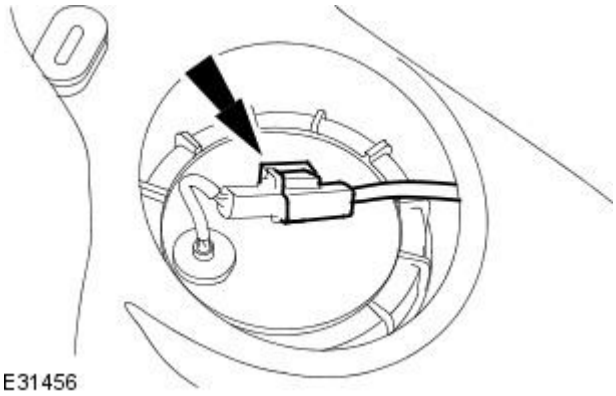


**16.** Attach the fuel transfer pump module electrical connector to the retaining bracket.

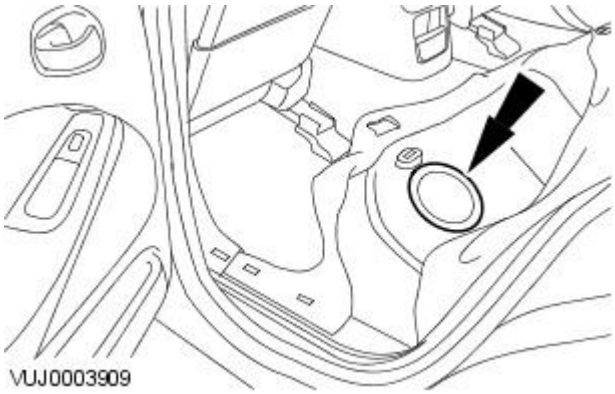


**17.** Install the floor aperture cover.

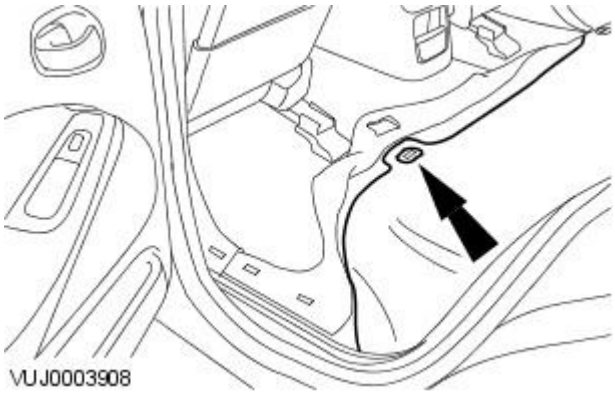


**18.** Attach the rear seat cushion insulation.

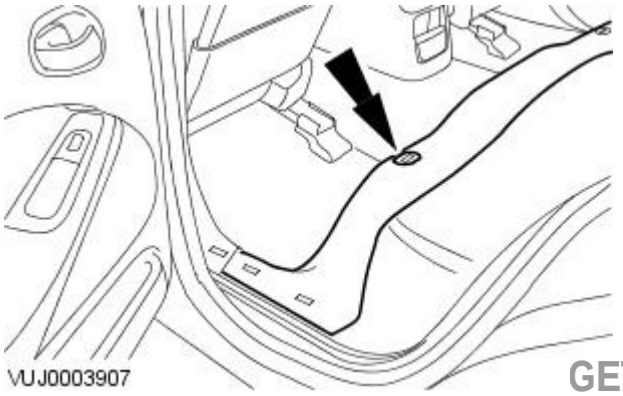


**19.** Attach the floor covering.

GETtheMANUALS.org

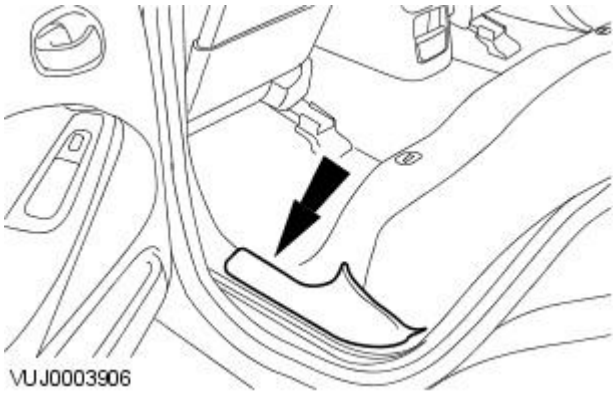


**20.** Install the scuff plate trim panel.

**21.** Install the rear seat cushion.
For additional information, refer to: Rear Seat Cushion (501-10 Seating, Removal and Installation).

**22.** Attach the fuel tank filler pipe cap.

**23.** Connect the battery ground cable.

**24.** Attach the door opening weatherstrip.

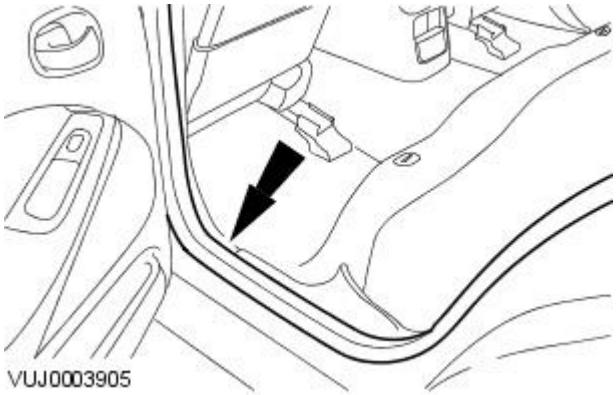


**25.** Close the fuel tank filler pipe flap.

GETtheMANUALS.org

# Fuel Tank and Lines - Fuel Pump ModuleV8 4.2L Petrol/V8 S/C 4.2L Petrol/2.5L NA V6 - AJV6/3.0L NA V6 - AJ27, VIN Range: N52048->N99999

Removal and Installation

| Special Tool(s) | |
|---|---|
| | Remover/Installer, Fuel Pump Module/Fuel Transfer Pump Locking Ring<br><br>310-146 |

## Removal

• WARNINGS:

Place the vehicle in a quarantined area and arrange "No Smoking/Petrol Fumes" signs about the vehicle.

Before any work is carried out on the fuel system, ground the vehicle to earth and maintain the ground connection until the work is complete.

Do not smoke or carry lighted tobacco or open flame of any type when working on or near any fuel related components. Highly flammable vapors are always present and may ignite. Failure to follow these instructions may result in personal injury.

The fuel system remains pressurized for a long time after the ignition is switched off. The fuel pressure must be relieved before attempting any repairs. Failure to follow these instructions may result in personal injury.

After carrying out repairs, the fuel system must be checked visually for leaks. Failure to follow these instructions may result in personal injury.

This procedure involves fuel handling. Be prepared for fuel spillage at all times and always observe fuel handling precautions. Failure to follow these instructions may result in personal injury.

If taken internally do not induce vomiting, seek immediate medical attention. Failure to follow these instructions may result in personal injury.

If fuel contacts the eyes, flush the eyes with cold water or eyewash solution and seek medical attention.

Wash hands thoroughly after handling, as prolonged contact may cause irritation. Should irritation develop, seek medical attention.

• NOTE: Federal market vehicles, refer to step 14.

• NOTE: Non federal market vehicles, refer to step 15.

• NOTE: For vehicles with worm drive clamp, refer to step 14.

• NOTE: For vehicles with fuel pump locking ring, refer to step 15.

**1.** NOTE: All vehicles.

Open the fuel tank filler pipe flap.

**2.** Disconnect the battery ground cable.
For additional information, refer to: Battery Disconnect and Connect (414-01 Battery, Mounting and Cables, General Procedures).

**3.** Detach the fuel tank filler pipe cap.

**4.** Release the pressure in the fuel system.
For additional information, refer to: Fuel System Pressure Release (310-00 Fuel System - General Information, General Procedures).

**5.** Drain the fuel system.

**6.** Remove the rear seat cushion.
For additional information, refer to: Rear Seat Cushion (501-10 Seating, Removal and Installation).

GETtheMANUALS.org

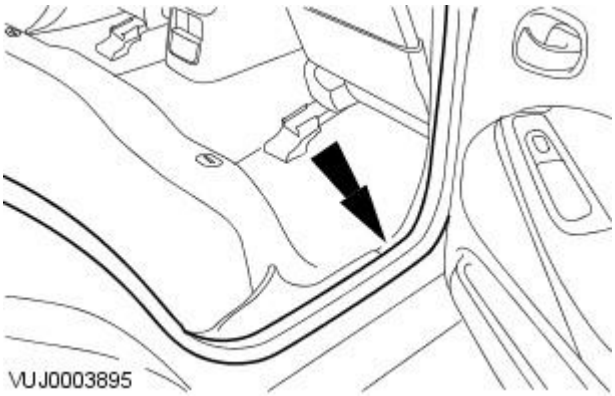


**7.** Detach and reposition the door opening weatherstrip.

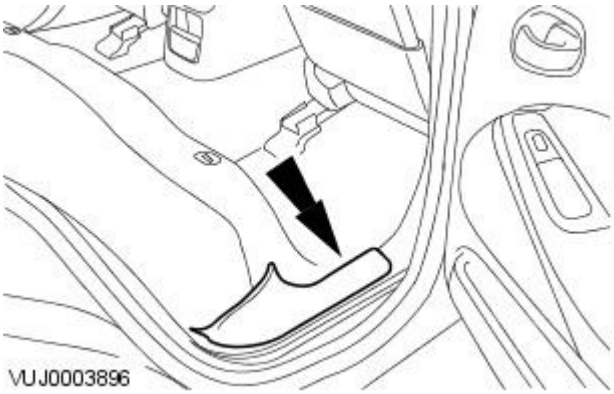


**8.** Remove the scuff plate trim panel.

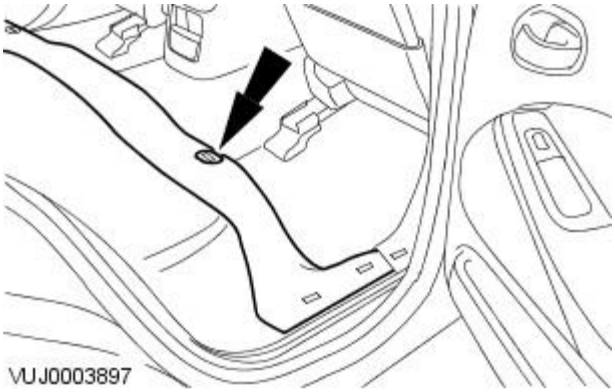


**9.** Detach and reposition the floor covering.

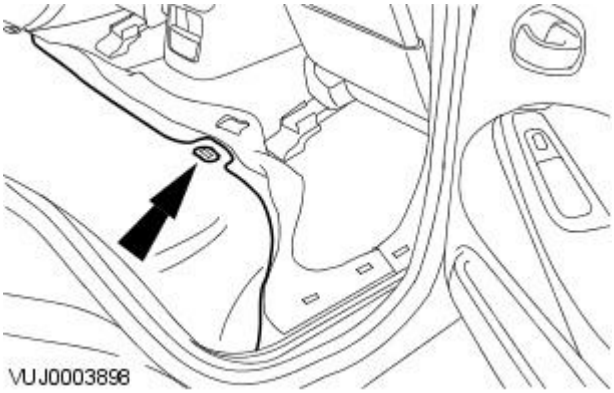


**10.** Detach and reposition the rear seat cushion insulation.

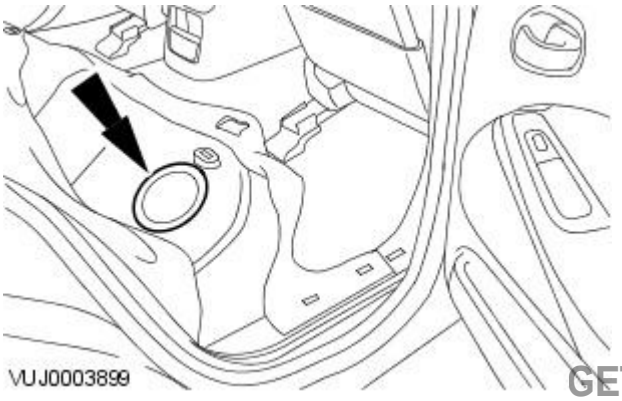


**11.** Remove the floor aperture cover.

GETtheMANUALS.org

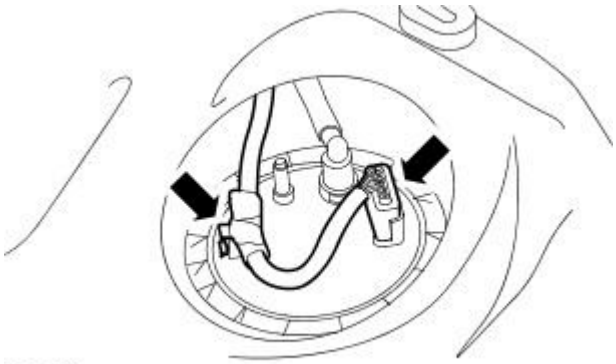

E63231

**12.** Disconnect the fuel pump module electrical connector.

- Detach the fuel pump module wiring harness from the retaining bracket.

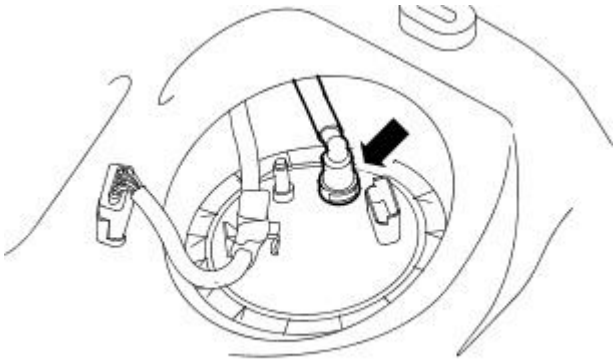

E63232

**13.** Disconnect the fuel pump module quick release coupling.

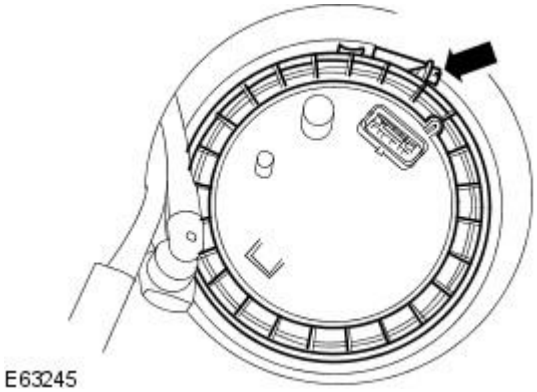

E63245

**14.** NOTE: For vehicles with worm drive clamp.

Remove and discard the fuel transfer unit worm drive clamp.

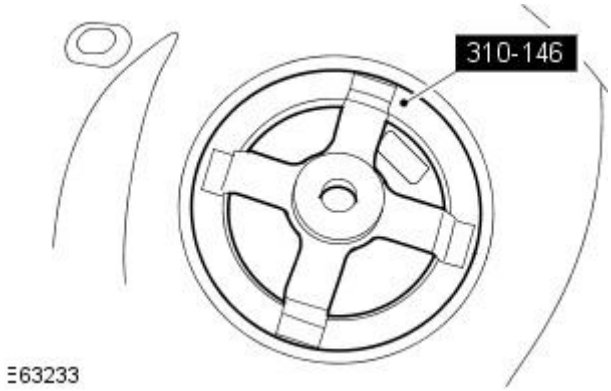


E63233

**15.** NOTE: For vehicles with fuel pump locking ring.

Using the special tool, remove the fuel transfer unit locking ring.

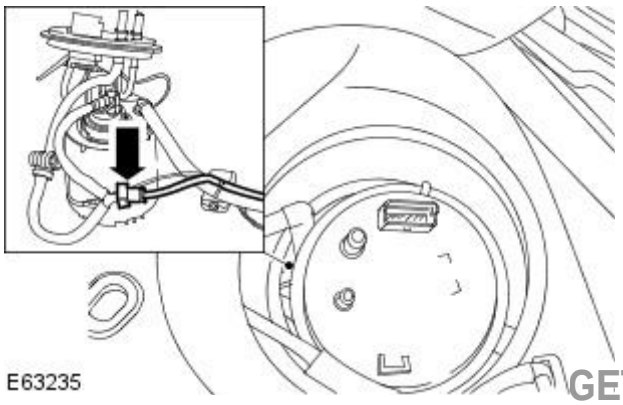

E63235

**16.** NOTE: All vehicles.

Disconnect the fuel transfer module transfer feed tube.

GETtheMANUALS.org

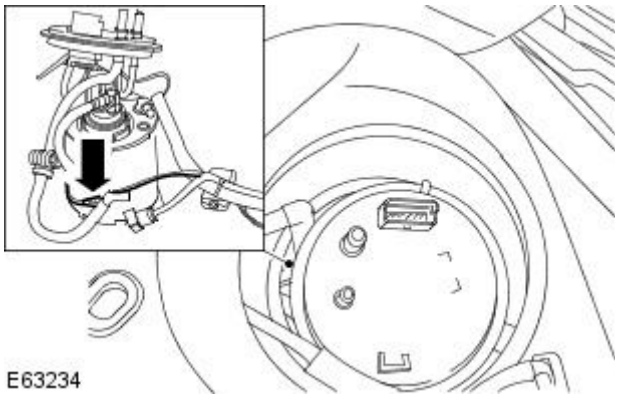


**17.** Disconnect the left-hand fuel sender gauge electrical connector.

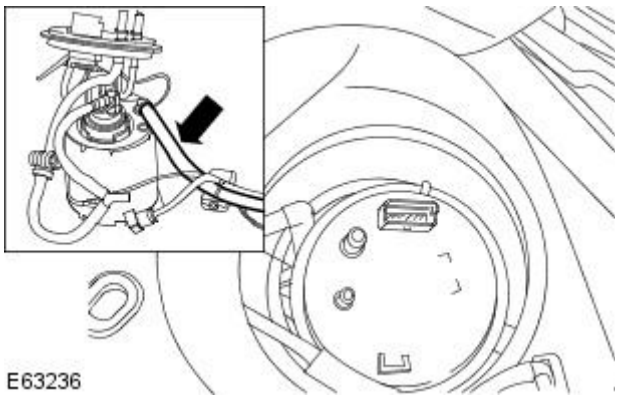


**18.** Disconnect the fuel transfer module transfer return tube.

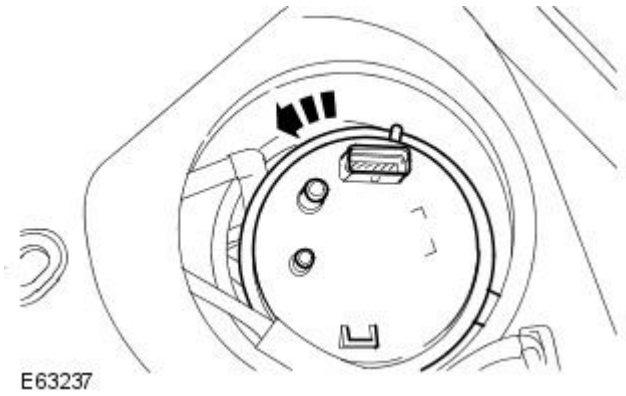


**19.** CAUTION: Make sure no damage occurs to the fuel level float.

Remove the fuel pump module.

- Press down and rotate the base of the fuel pump module counter-clockwise.

## Installation

- NOTE: For vehicles with fuel pump locking ring, refer to step 6.
- NOTE: For vehicles with worm drive clamp, refer to step 5.

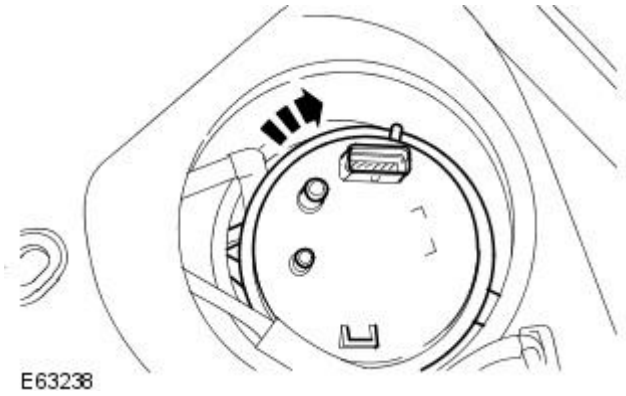


**1.** CAUTIONS:

On vehicles with supercharger make sure the arrow on the fuel pump module and the 'SC' marker on the fuel tank are aligned.

On vehicles without supercharger make sure the arrow on the fuel transfer module and the 'NA' marker on the fuel tank are aligned.

Make sure no damage occurs to the fuel level float.

- NOTE: All vehicles.

Install the fuel pump module.

- Press down and rotate the base of the fuel pump module clockwise.

GETtheMANUALS.org

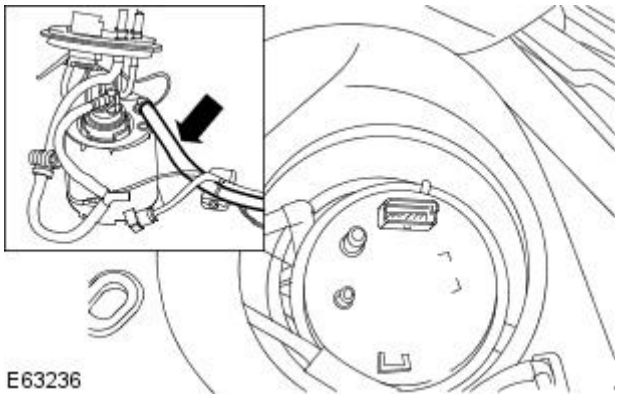


**2.** Connect the transfer module transfer return tube.

- Make sure the coupling has latched onto the fuel pump module by pulling the tube after the connection has been made.

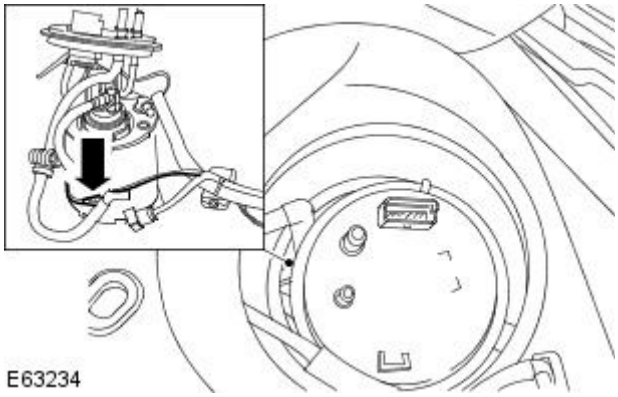


**3.** Connect the left-hand fuel sender gauge electrical connector.

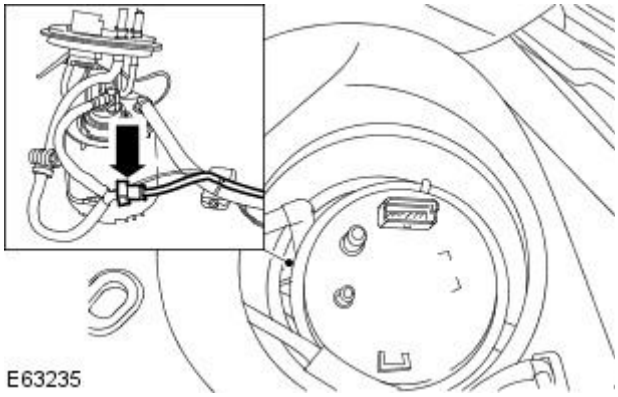


**4.** Connect the transfer module transfer feed tube.

- Make sure the quick release coupling has latched onto the fuel pump module fuel tube by pulling the tube after the connection has been made.

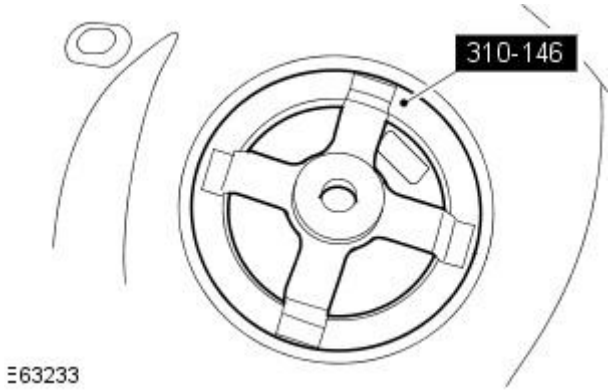


**5.** NOTE: For vehicles with fuel pump locking ring.

Using the special tool, install the fuel pump module locking ring.

- Install a new O-ring seal.
- Tighten to 60 Nm.

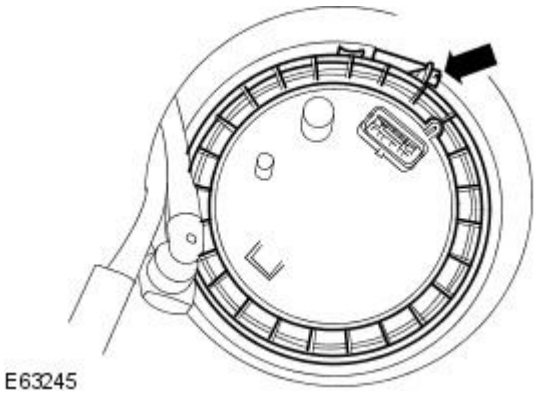


**6.** CAUTION: If the vehicle is fitted with a worm drive clamp which is not fitted with a shear off cap, tighten the clamp to 4Nm.

• NOTE: For vehicles with worm drive clamp.

Install the fuel pump module worm drive clamp.

- Tighten the clamp until the cap shears off.

GETtheMANUALS.org

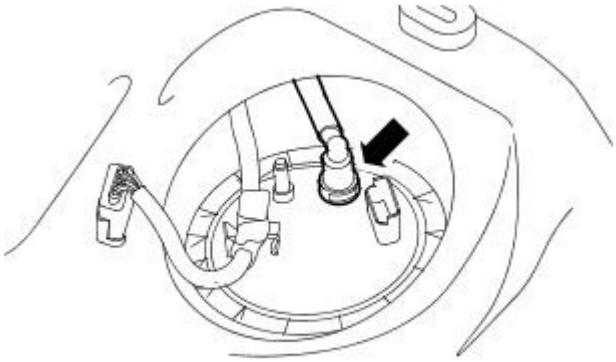

E63232

**7.** NOTE: All vehicles.

Connect the fuel pump module quick release coupling.

- Make sure the quick release coupling has latched onto the fuel pump module fuel pipe by pulling the pipe after the connection has been made.

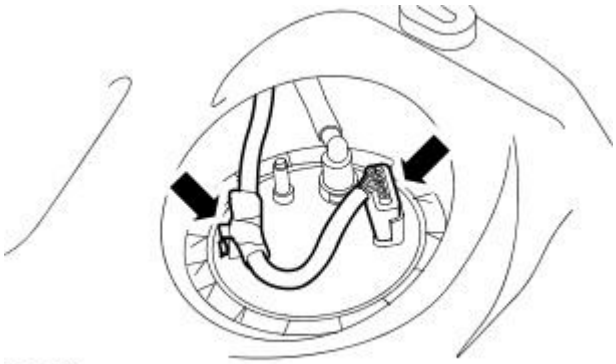

E63231

**8.** Connect the fuel pump module electrical connector.

- Attach the fuel pump module wiring harness to the retaining bracket.

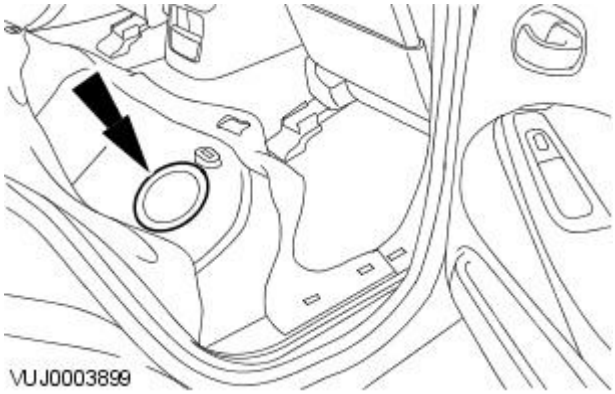

VUJ0003899

**9.** Install the floor aperture cover.

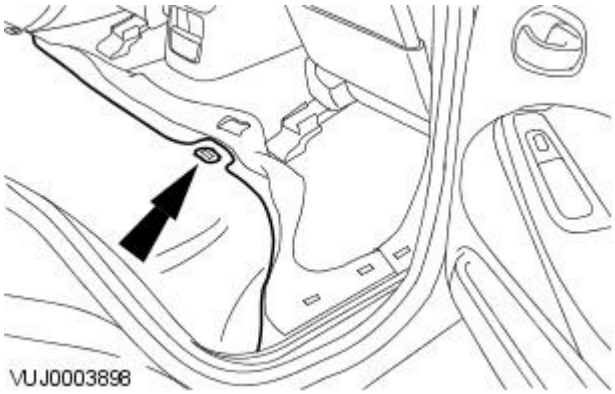

VUJ0003898

**10.** Attach the rear seat cushion insulation.

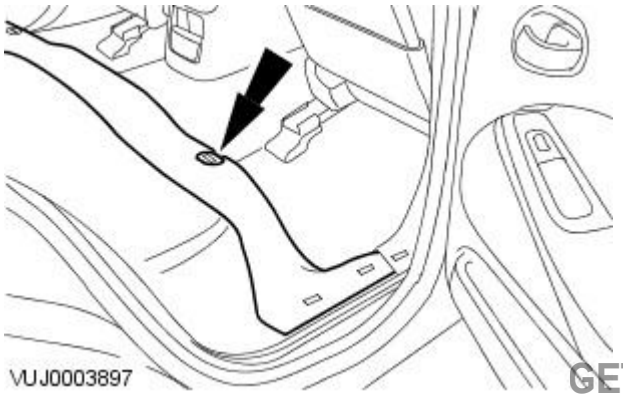

VUJ0003897

**11.** Attach the floor covering.

GETtheMANUALS.org

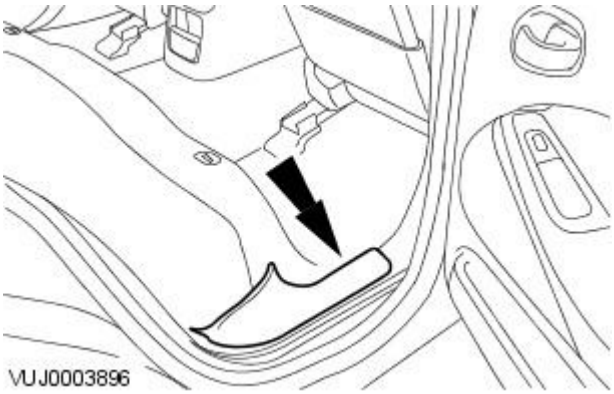


**12.** Install the scuff plate trim panel.

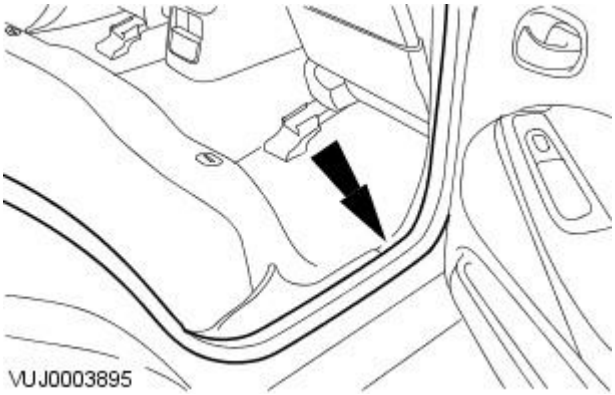


**13.** Attach the door opening weatherstrip.

**14.** Install the rear seat cushion.
For additional information, refer to: Rear Seat Cushion (501-10 Seating, Removal and Installation).

**15.** Attach the fuel tank filler pipe cap.

**16.** Connect the battery ground cable.
For additional information, refer to: Battery Connect (414-01 Battery, Mounting and Cables, General Procedures).

**17.** Close the fuel tank filler pipe flap.

GETtheMANUALS.org

# Fuel Tank and Lines - Fuel Pump Module2.7L V6 - TdV6

Removal and Installation

| Special Tool(s) | |
|---|---|
| 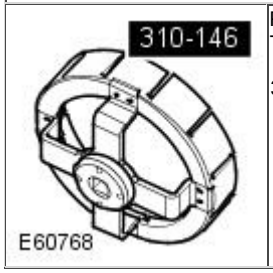  | Remover/Installer, Fuel Pump Module/Fuel Transfer Pump Locking Ring<br><br>310-146 |

## Removal

**1.** WARNINGS:

Place the vehicle in a quarantined area and arrange "No Smoking/Petrol Fumes" signs about the vehicle.

Before any work is carried out on the fuel system, ground the vehicle to earth and maintain the ground connection until the work is complete.

Do not smoke or carry lighted tobacco or open flame of any type when working on or near any fuel related components. Highly flammable vapors are always present and may ignite. Failure to follow these instructions may result in personal injury.

The fuel system remains pressurized for a long time after the ignition is switched off. The fuel pressure must be relieved before attempting any repairs. Failure to follow these instructions may result in personal injury.

After carrying out repairs, the fuel system must be checked visually for leaks. Failure to follow these instructions may result in personal injury.

This procedure involves fuel handling. Be prepared for fuel spillage at all times and always observe fuel handling precautions. Failure to follow these instructions may result in personal injury.

If taken internally do not induce vomiting, seek immediate medical attention. Failure to follow these instructions may result in personal injury.

If fuel contacts the eyes, flush the eyes with cold water or eyewash solution and seek medical attention.

Wash hands thoroughly after handling, as prolonged contact may cause irritation. Should irritation develop, seek medical attention.

Remove the fuel level sensor.
For additional information, refer to: Fuel Transfer Unit - 2.7L V6 - TdV6 (310-01 Fuel Tank and Lines, Removal and Installation).

**2.** Detach and reposition the door opening weatherstrip.

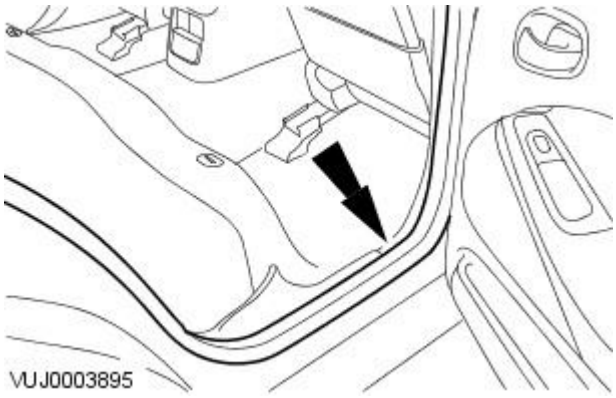


GETtheMANUALS.org

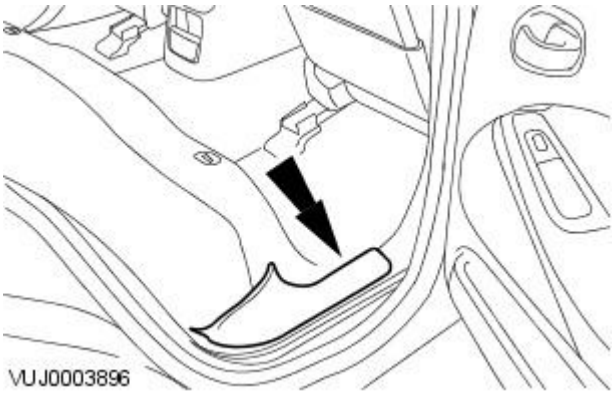


**3.** Remove the scuff plate trim panel.

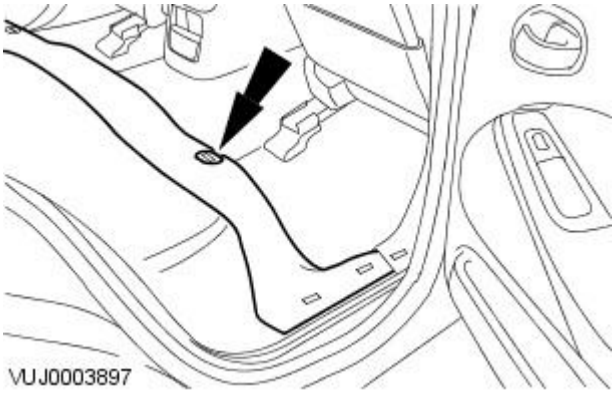


**4.** Detach and reposition the floor covering.

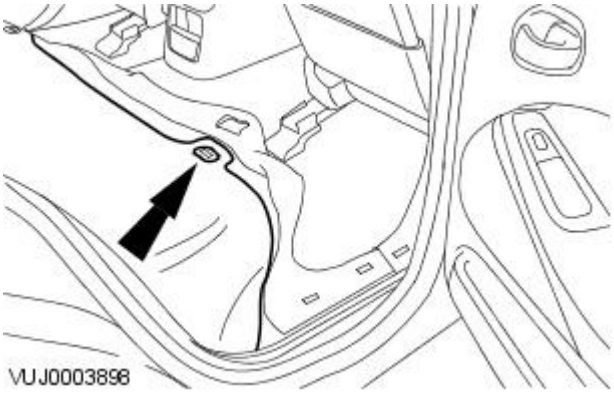


**5.** Detach and reposition the rear seat cushion insulation.

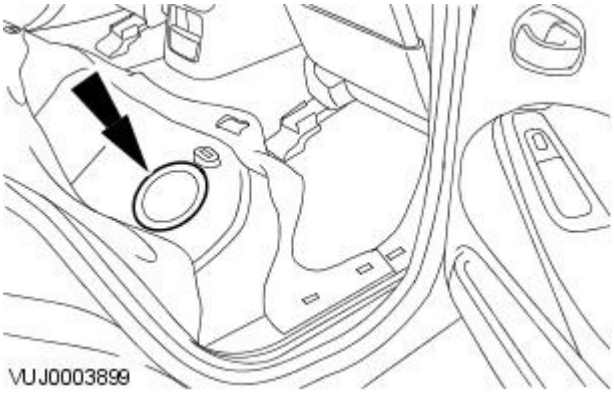


**6.** Remove the floor aperture cover.

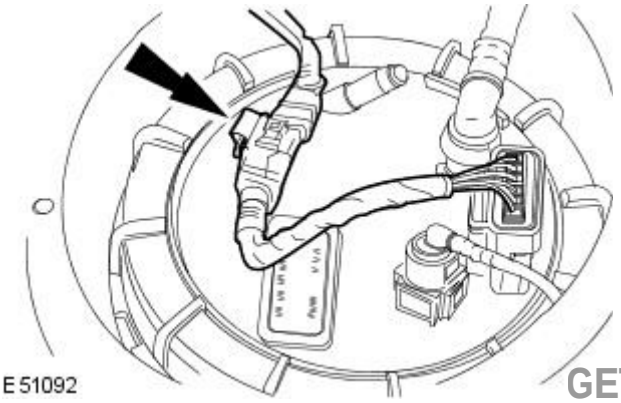


**7.** Detach the fuel pump module electrical connector from the retaining bracket.

GETtheMANUALS.org

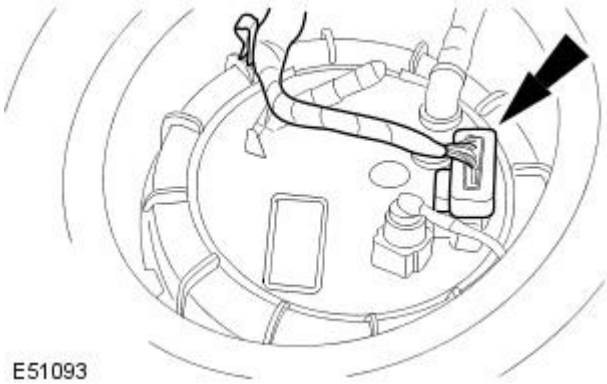


**8.** Disconnect the fuel pump module electrical connector.

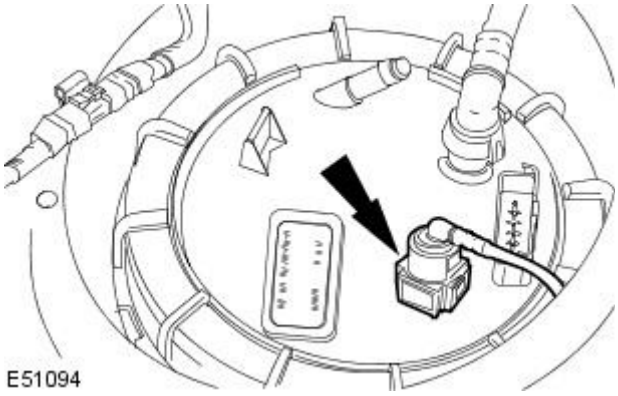


**9.** Disconnect the auxiliary heater fuel supply line quick release coupling.
For additional information, refer to: Quick Release Coupling - Push Connect (310-00 Fuel System - General Information, General Procedures).

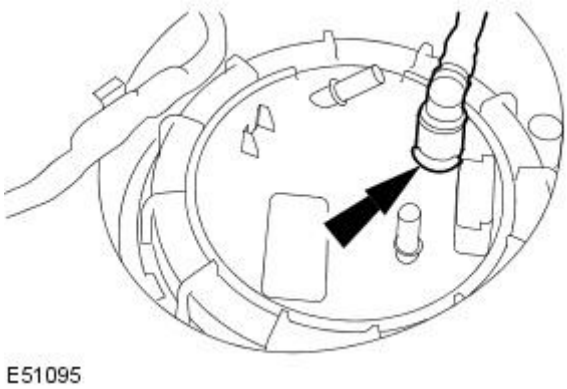


**10.** Disconnect the fuel supply line quick release coupling.
For additional information, refer to: Quick Release Coupling - Push Connect (310-00 Fuel System - General Information, General Procedures).

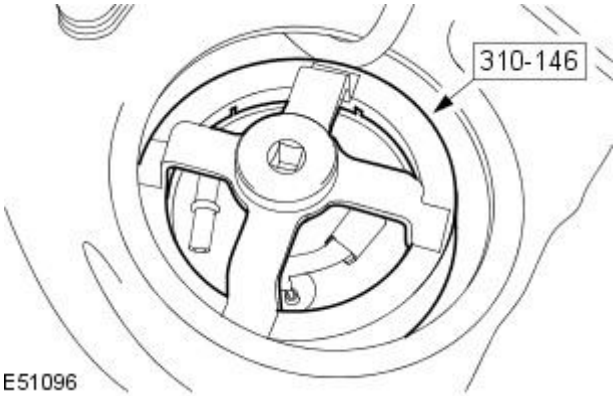


**11.** CAUTION: Make sure no damage occurs to the fuel pump module when removing the locking ring.

Using the special tool, remove the fuel pump module locking ring.

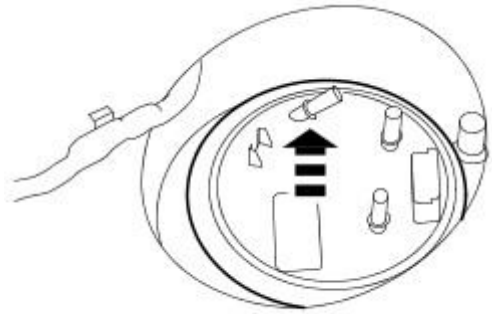


**12.** Detach and reposition the upper part of the fuel pump module.

GETtheMANUALS.org

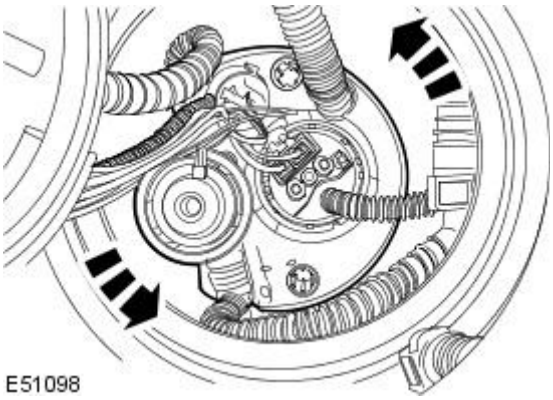


**13.** Detach the fuel pump module from the fuel tank.

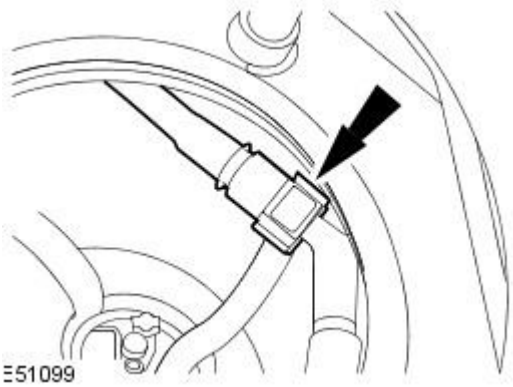


**14.** Disconnect the fuel transfer line quick release coupling.
For additional information, refer to: Quick Release Coupling - Push Connect (310-00 Fuel System - General Information, General Procedures).

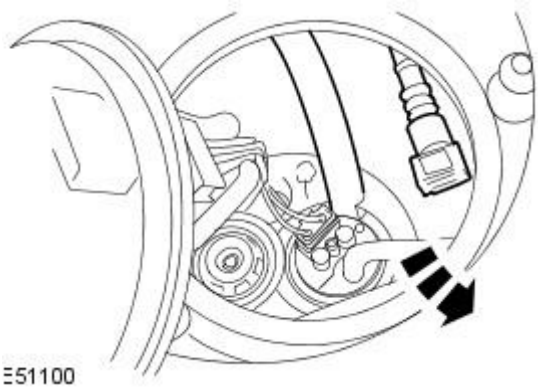


**15.** Feed the fuel transfer pipes across the front of the fuel tank saddle and through the fuel pump module aperture.

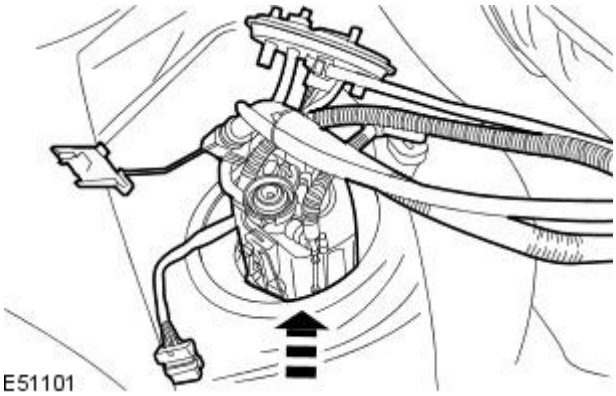


**16.** CAUTION: Make sure no damage occurs to the fuel level float.

Remove the fuel pump module.

- Remove and discard the fuel pump module gasket.

## Installation

• WARNINGS:

Place the vehicle in a quarantined area and arrange "No Smoking/Petrol Fumes" signs about the vehicle.

Before any work is carried out on the fuel system, ground the vehicle to earth and maintain the ground connection until the work is complete.

Do not smoke or carry lighted tobacco or open flame of any type when working on or near any fuel related components. Highly flammable vapors are always present and may ignite. Failure to follow these instructions may result in personal injury.

GETtheMANUALS.org

The fuel system remains pressurized for a long time after the ignition is switched off. The fuel pressure must be relieved before attempting any repairs. Failure to follow these instructions may result in personal injury.

After carrying out repairs, the fuel system must be checked visually for leaks. Failure to follow these instructions may result in personal injury.

This procedure involves fuel handling. Be prepared for fuel spillage at all times and always observe fuel handling precautions. Failure to follow these instructions may result in personal injury.

If taken internally do not induce vomiting, seek immediate medical attention. Failure to follow these instructions may result in personal injury.

If fuel contacts the eyes, flush the eyes with cold water or eyewash solution and seek medical attention.

Wash hands thoroughly after handling, as prolonged contact may cause irritation. Should irritation develop, seek medical attention.

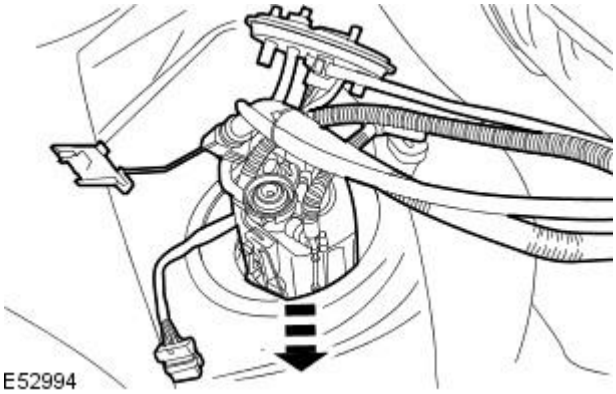


**1.** CAUTION: Make sure no damage occurs to the fuel level float of fuel pump components.

- NOTE: Install a new gasket to the fuel pump module flange.
- NOTE: Take care not to stretch the gasket.

Install the fuel pump module.

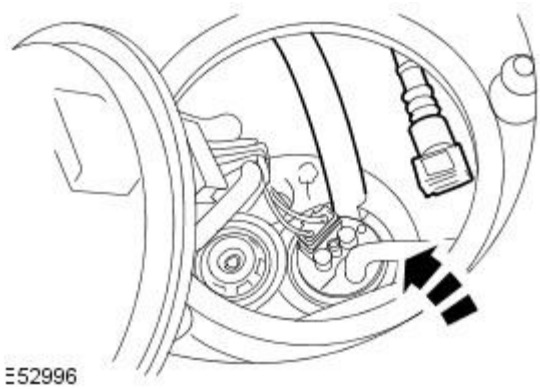


**2.** Feed the fuel transfer lines through the fuel pump module aperture and across the front of the fuel tank saddle.

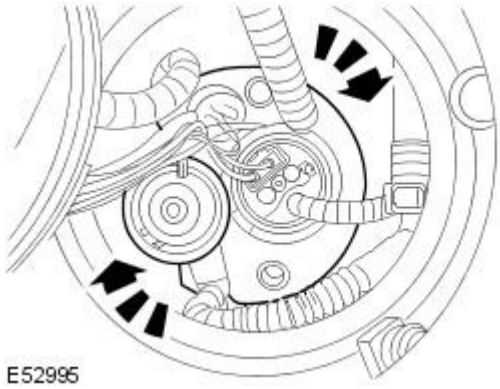


**3.** Attach the fuel pump module to the fuel tank.

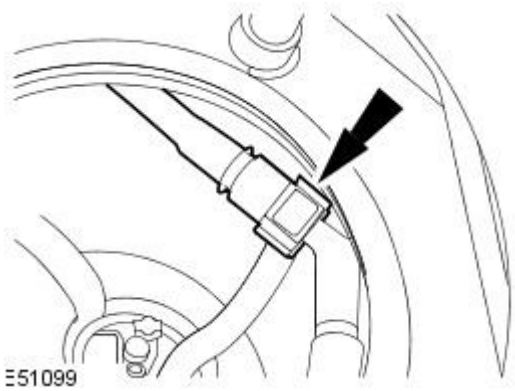


**4.** Connect the fuel transfer pipe quick release coupling.
For additional information, refer to: Quick Release Coupling - Push Connect (310-00 Fuel System - General Information, General Procedures).
.

GETtheMANUALS.org

**5.** Reposition the upper part of the fuel pump module.

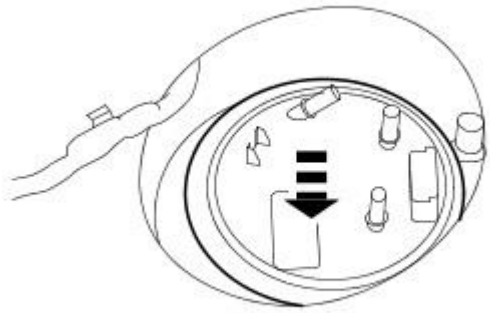

E51102

**6.** Align the arrow on the fuel pump module with the alignment marks on the fuel tank.

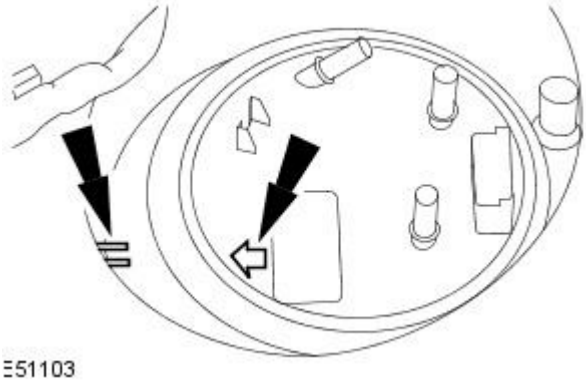

E51103

**7.** CAUTION: Make sure no damage occurs to the fuel pump module when installing the locking ring.

Using the special tool, install the fuel pump module locking ring.

- Tighten to 60 Nm.

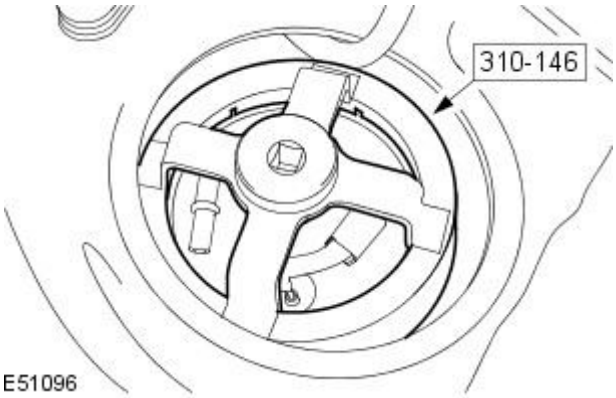


E51096

**8.** Connect the fuel pump module quick release coupling.
For additional information, refer to: Quick Release Coupling - Push Connect (310-00 Fuel System - General Information, General Procedures).

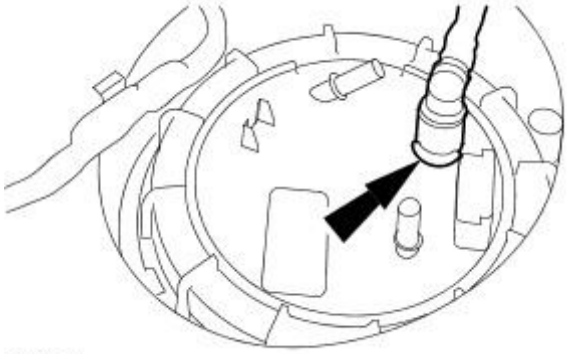

E51095

**9.** Connect the auxiliary heater fuel supply line quick release coupling.
For additional information, refer to: Quick Release Coupling - Push Connect (310-00 Fuel System - General Information, General Procedures).

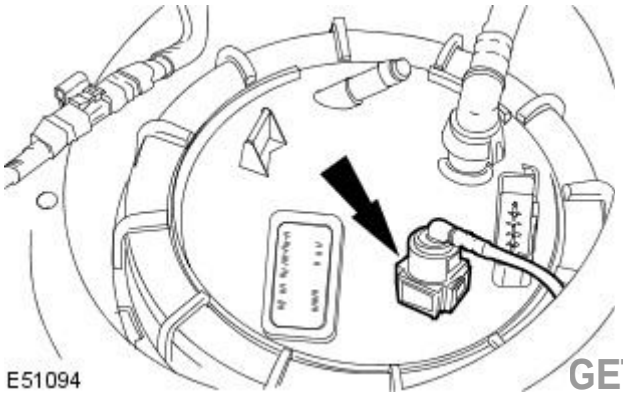

E51094

GETtheMANUALS.org

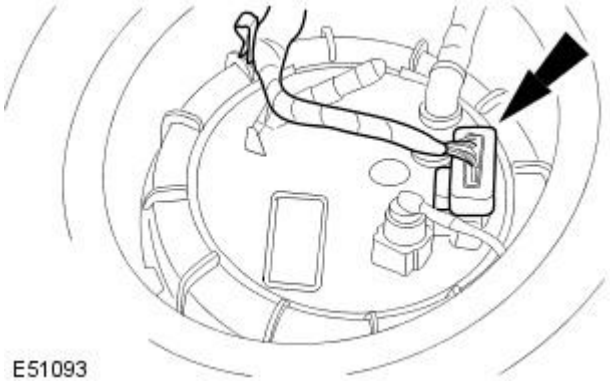


**10.** Connect the fuel pump module electrical connector.

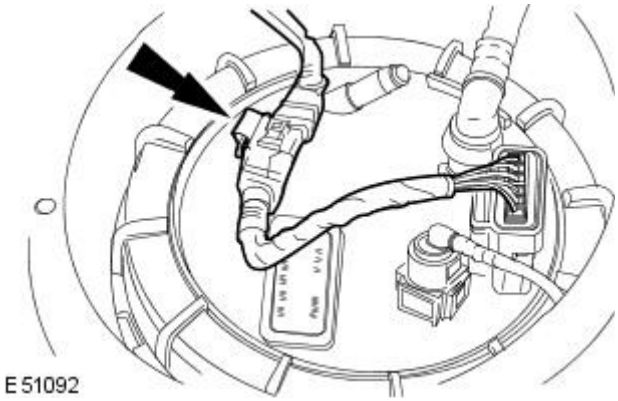


**11.** Attach the fuel pump module electrical connector to the retaining bracket.

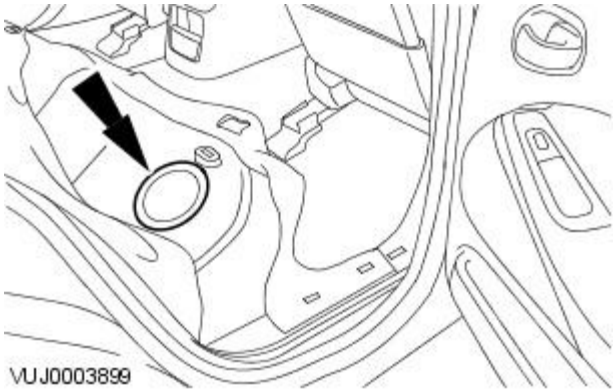


**12.** Install the floor aperture cover.

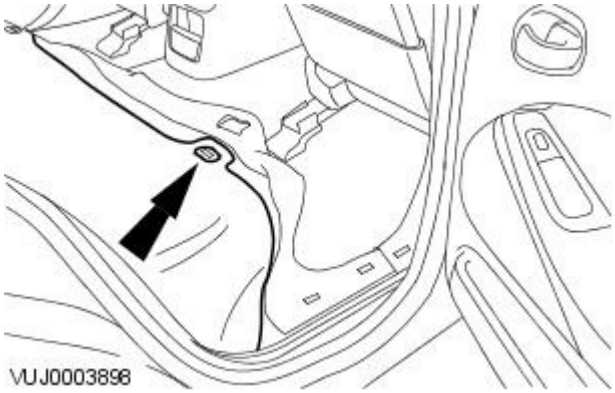


**13.** Attach the rear seat cushion insulation.

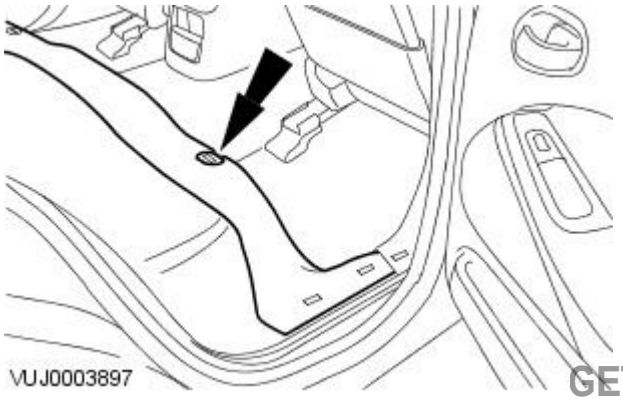


**14.** Attach the floor covering.

GETtheMANUALS.org

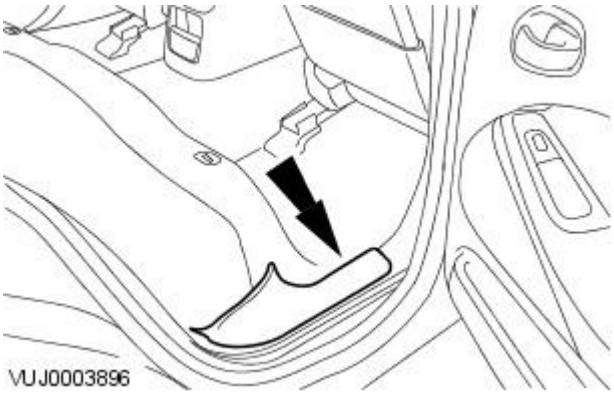


**15.** Install the scuff plate trim panel.

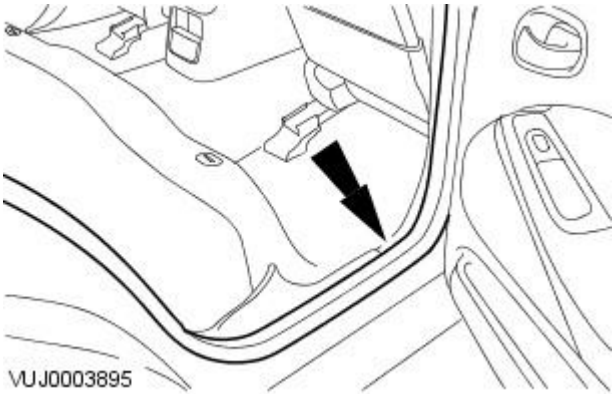


**16.** Attach the door opening weatherstrip.

**17.** Install the fuel level sensor.
For additional information, refer to: Fuel Transfer Unit - 2.7L V6 - TdV6 (310-01 Fuel Tank and Lines, Removal and Installation).

GETtheMANUALS.org

# Fuel Tank and Lines - Fuel TankV8 4.2L Petrol / V8 S/C 4.2L Petrol / 2.5L NA V6 - AJV6 / 3.0L NA V6 - AJ27

Removal and Installation

## Removal

**1.** WARNINGS:

Place the vehicle in a well ventilated, quarantined, area and arrange "No Smoking/Fuel Fumes" signs about the vehicle.

Before any work is carried out on the fuel system, ground the vehicle to earth and maintain the ground connection until the work is complete.

Do not smoke or carry lighted tobacco or open flame of any type when working on or near any fuel related components. Highly flammable vapors are always present and may ignite. Failure to follow these instructions may result in personal injury.

The fuel system remains pressurized for a long time after the ignition is switched off. The fuel pressure must be relieved before attempting any repairs. Failure to follow these instructions may result in personal injury.

After carrying out repairs, the fuel system must be checked visually for leaks. Failure to follow these instructions may result in personal injury.

This procedure involves fuel handling. Be prepared for fuel spillage at all times and always observe fuel handling precautions. Failure to follow these instructions may result in personal injury.

If taken internally do not induce vomiting, seek immediate medical attention. Failure to follow these instructions may result in personal injury.

If fuel contacts the eyes, flush the eyes with cold water or eyewash solution and seek medical attention.

Wash hands thoroughly after handling, as prolonged contact may cause irritation. Should irritation develop, seek medical attention.

Drain the fuel tank.
For additional information, refer to: Fuel Tank Draining - VIN Range: N52048->N99999 (310-00 Fuel System - General Information, General Procedures).

**2.** Remove the driveshaft.
For additional information, refer to: Driveshaft (205-01 Driveshaft, Removal and Installation).

**3.** Remove the fuel tank filler pipe to fuel tank hose.

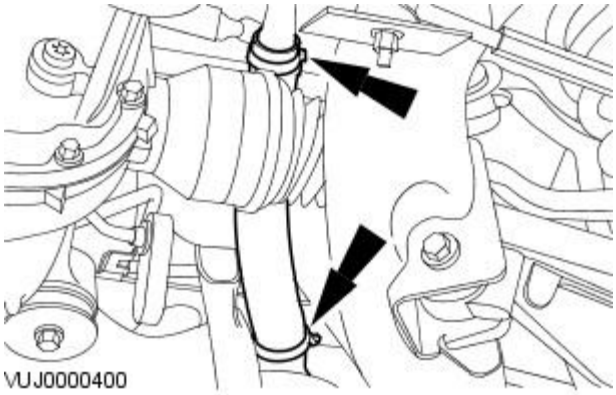


GETtheMANUALS.org

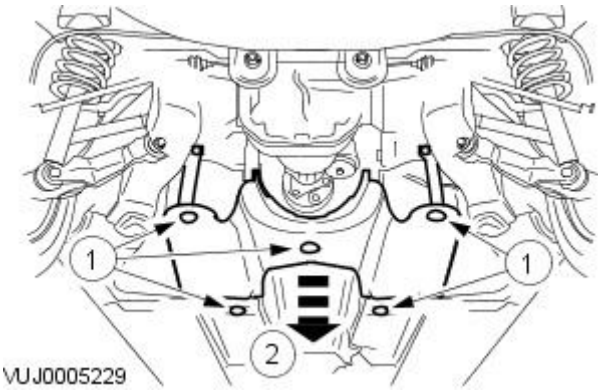


**4.** Remove the fuel tank heatshield.

1. Remove the fuel tank heatshield retaining nuts.
2. Remove the fuel tank heatshield.

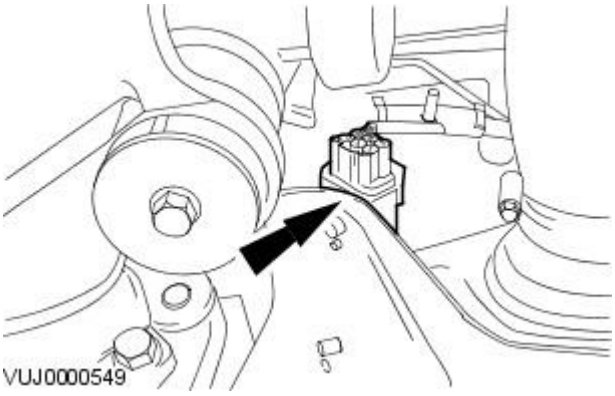


**5.** Disconnect the fuel tank electrical connector.

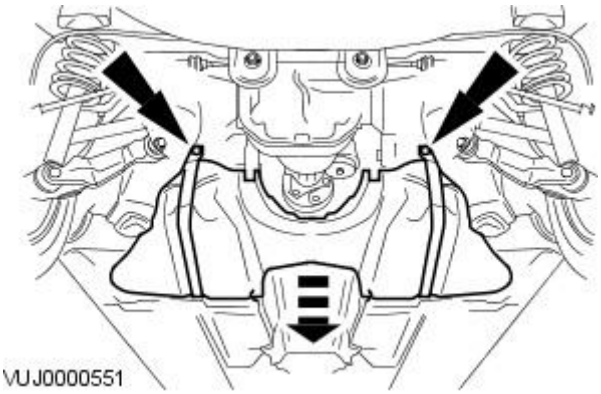


**6.** CAUTION: When supporting the fuel tank, use a suitable packing material to prevent damage to the underside of the fuel tank.

Remove the fuel tank.

- Detach the fuel tank support straps.

## Installation

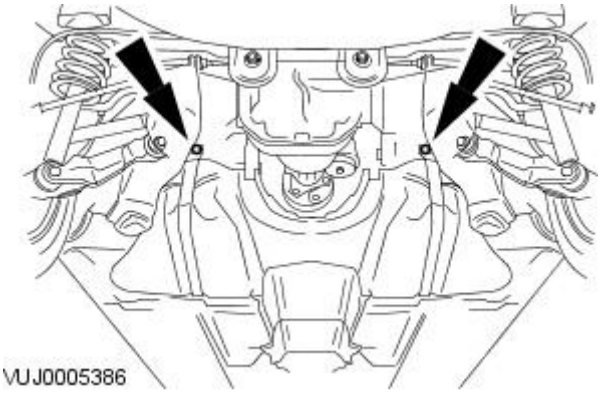


**1.** To install, reverse the removal procedure.

- Tighten to 35 Nm.

GETtheMANUALS.org

# Fuel Tank and Lines - Fuel Tank2.7L V6 - TdV6

Removal and Installation

## Removal

**1.** WARNINGS:

Place the vehicle in a well ventilated, quarantined, area and arrange "No Smoking/Fuel Fumes" signs about the vehicle.

Before any work is carried out on the fuel system, ground the vehicle to earth and maintain the ground connection until the work is complete.

Do not smoke or carry lighted tobacco or open flame of any type when working on or near any fuel related components. Highly flammable vapors are always present and may ignite. Failure to follow these instructions may result in personal injury.

The fuel system remains pressurized for a long time after the ignition is switched off. The fuel pressure must be relieved before attempting any repairs. Failure to follow these instructions may result in personal injury.

After carrying out repairs, the fuel system must be checked visually for leaks. Failure to follow these instructions may result in personal injury.

This procedure involves fuel handling. Be prepared for fuel spillage at all times and always observe fuel handling precautions. Failure to follow these instructions may result in personal injury.

If taken internally do not induce vomiting, seek immediate medical attention. Failure to follow these instructions may result in personal injury.

If fuel contacts the eyes, flush the eyes with cold water or eyewash solution and seek medical attention.

Wash hands thoroughly after handling, as prolonged contact may cause irritation. Should irritation develop, seek medical attention.

Drain the fuel tank.
For additional information, refer to: Fuel Tank Draining - 2.7L V6 - TdV6, VIN Range: M45255->N52047 (310-00 Fuel System - General Information, General Procedures).

**2.** Remove the driveshaft.
For additional information, refer to: Driveshaft (205-01 Driveshaft, Removal and Installation).

**3.** Remove the fuel tank filler pipe to fuel tank hose.

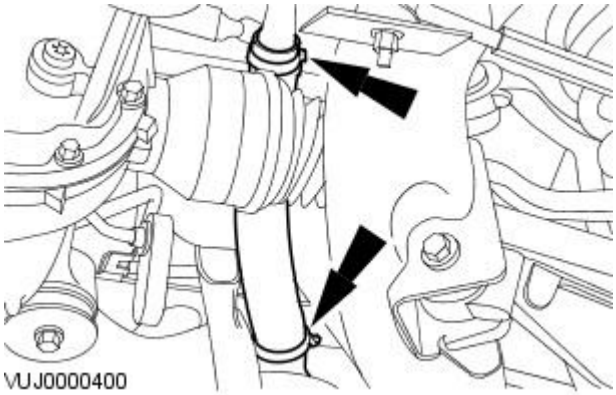


GETtheMANUALS.org

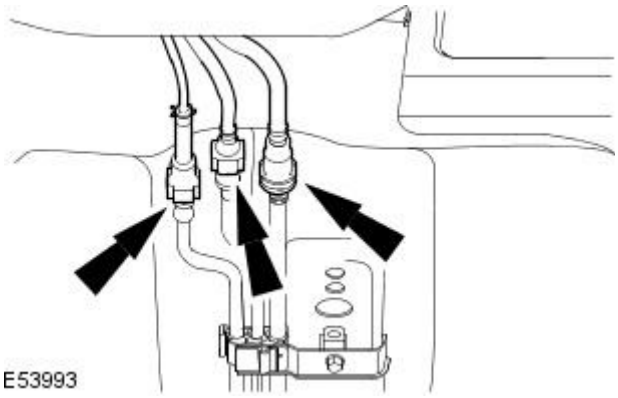


**4.** Disconnect the fuel feed and return lines.

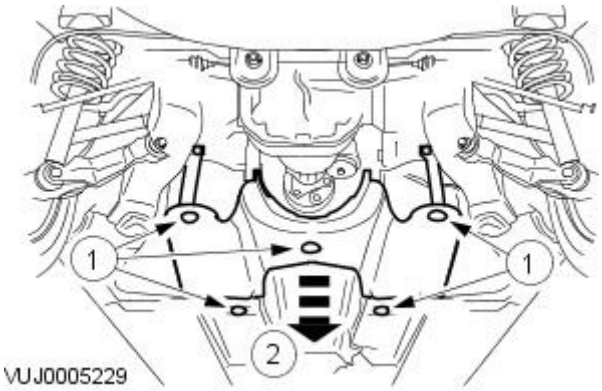


**5.** Remove the fuel tank heatshield.

1. Remove the fuel tank heatshield retaining nuts.
2. Remove the fuel tank heatshield.

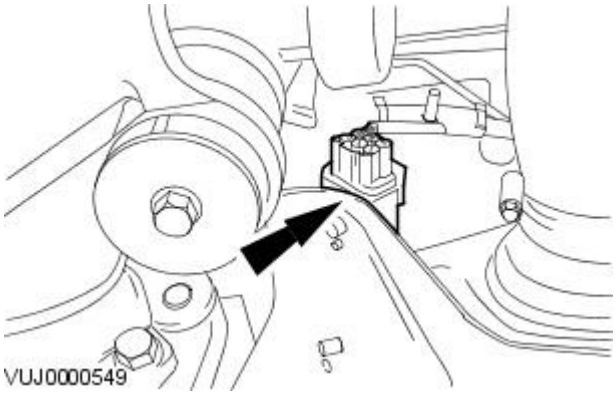


**6.** Disconnect the fuel tank electrical connector.

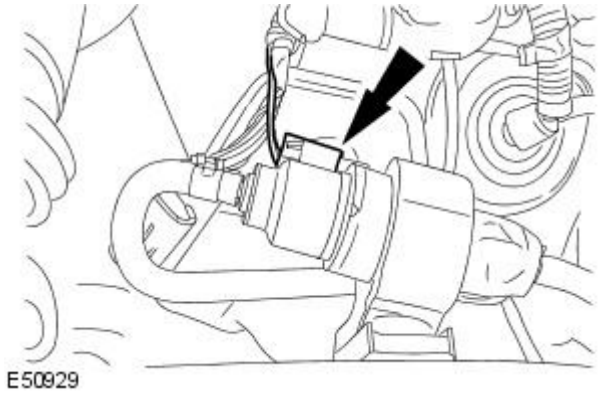


**7.** Disconnect the fuel fired heater electrical connector.

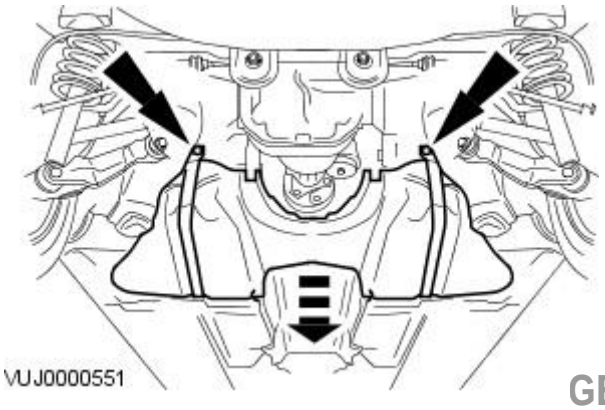


**8.** CAUTION: When supporting the fuel tank, use a suitable packing material to prevent damage to the underside of the fuel tank.

Remove the fuel tank.

- Detach the fuel tank support straps.

GETtheMANUALS.org

## Installation

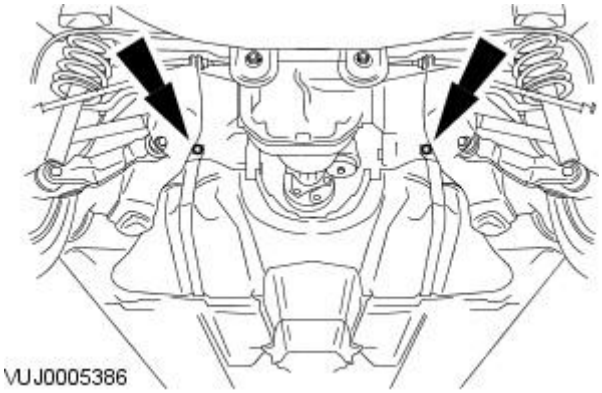


**1.** To install, reverse the removal procedure.

- Tighten to 35 Nm.

GETtheMANUALS.org

# Fuel Tank and Lines - Fuel Tank Filler Pipe

Removal and Installation

## Removal

All vehicles

**1.** WARNINGS:

Place the vehicle in a quarantined area and arrange “No Smoking/Petrol Fumes” signs about the vehicle.

Before any work is carried out on the fuel system, ground the vehicle to earth and maintain the ground connection until the work is complete.

Do not smoke or carry lighted tobacco or open flame of any type when working on or near any fuel related components. Highly flammable vapors are always present and may ignite. Failure to follow these instructions may result in personal injury.

The fuel system remains pressurized for a long time after the ignition is switched off. The fuel pressure must be relieved before attempting any repairs. Failure to follow these instructions may result in personal injury.

After carrying out repairs, the fuel system must be checked visually for leaks. Failure to follow these instructions may result in personal injury.

This procedure involves fuel handling. Be prepared for fuel spillage at all times and always observe fuel handling precautions. Failure to follow these instructions may result in personal injury.

If taken internally do not induce vomiting, seek immediate medical attention. Failure to follow these instructions may result in personal injury.

If fuel contacts the eyes, flush the eyes with cold water or eyewash solution and seek medical attention.

Wash hands thoroughly after handling, as prolonged contact may cause irritation. Should irritation develop, seek medical attention.

De-pressurize the fuel system.
For additional information, refer to: Fuel System Pressure Release (310-00 Fuel System - General Information, General Procedures).

**2.** Remove the fuel tank filler pipe cap.

Vehicles built up to 01/2004

**3.** Remove the fuel tank filler pipe upper retaining bolts.

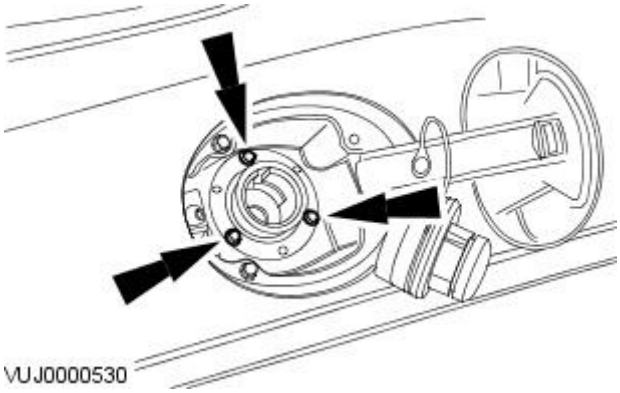


All vehicles

**4.** Remove the right-hand rear wheel and tire. For additional information, refer to
For additional information, refer to: Wheel and Tire (204-04 Wheels and Tires, Removal and Installation).

Vehicles built up to 01/2004

GETtheMANUALS.org

**5.** Remove the right-hand rear fender splash shield.

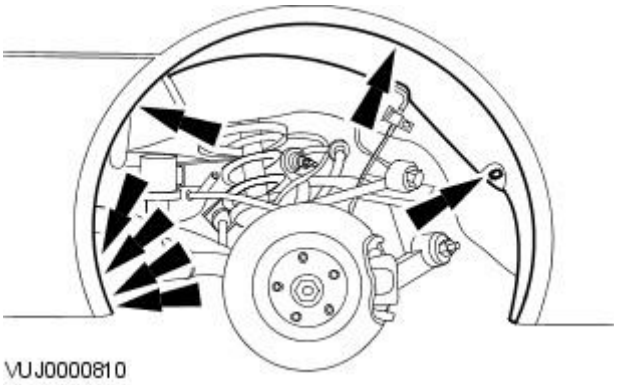


Vehicles built 02/2004 onwards

**6.** Remove the right-hand rear fender splash shield.

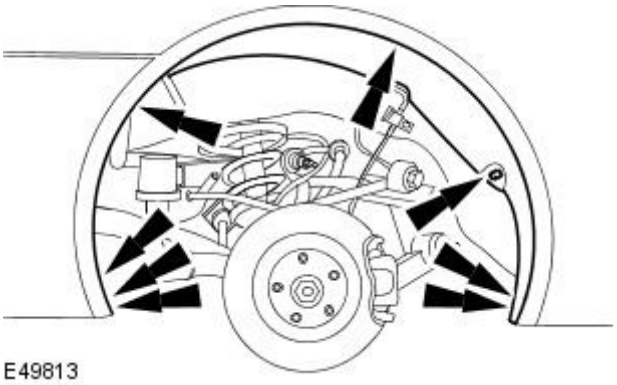


Vehicles built up to 01/2004

**7.** Detach the fuel tank filler pipe.

1. Disconnect the fuel hose.
2. Detach the fuel tank filler pipe.

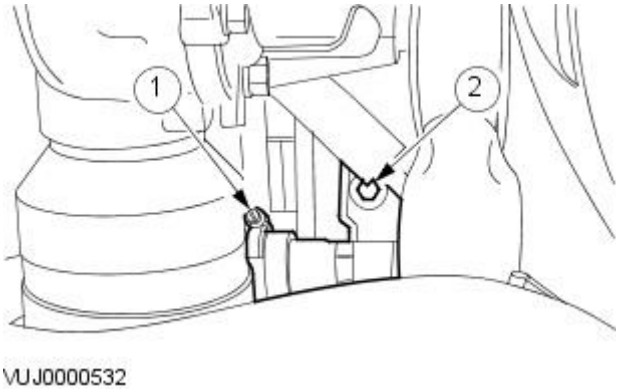


Vehicles built 02/2004 onwards

**8.** Remove the fuel tank filler pipe retaining nut.

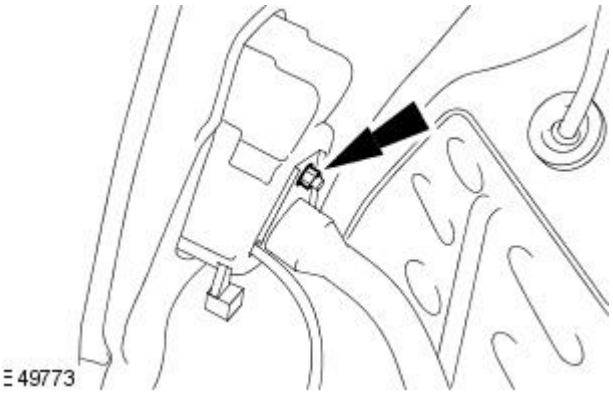


GETtheMANUALS.org

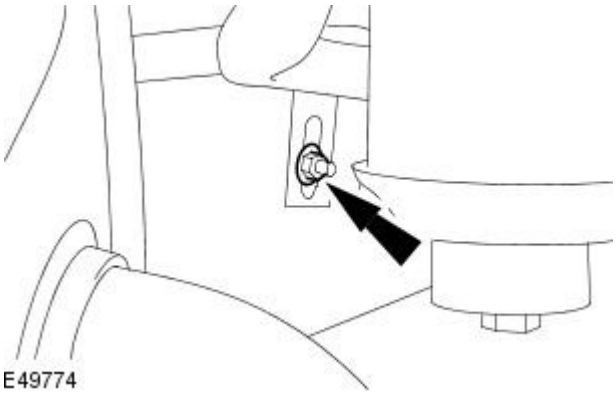


**9.** Remove the fuel tank filler pipe retaining nut.

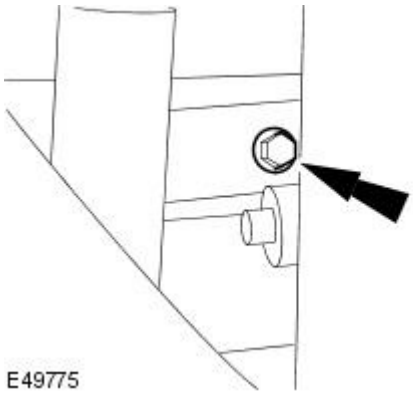


**10.** Remove the fuel tank filler pipe retaining bolt.

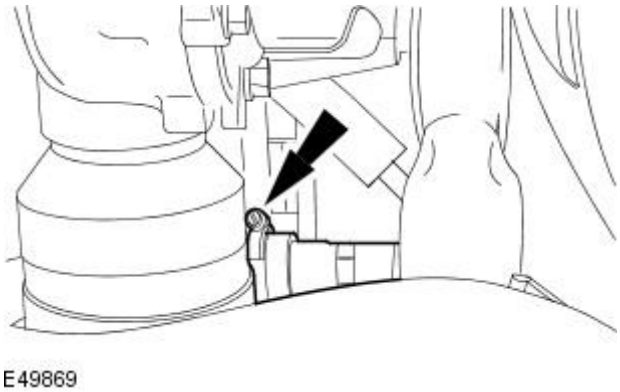


**11.** Detach the fuel tank filler pipe.

All vehicles

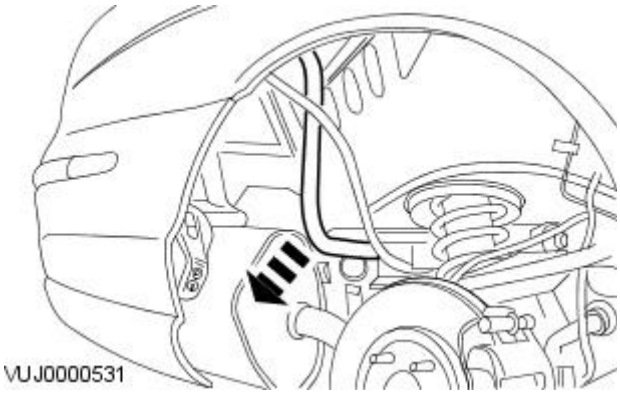


**12.** Remove the fuel tank filler pipe.

## Installation

**1.** To install, reverse the removal procedure.

GETtheMANUALS.org

# Fuel Tank and Lines - Fuel Transfer PumpV8 4.2L Petrol/V8 S/C 4.2L Petrol/2.5L NA V6 - AJV6/3.0L NA V6 - AJ27, VIN Range: M45255->N52047

Removal and Installation

| Special Tool(s) | |
|---|---|
| 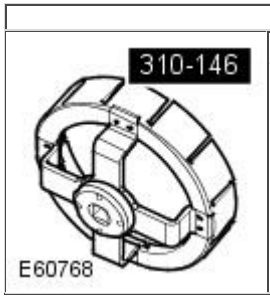  | Remover/Installer, Fuel Pump Module/Fuel Transfer Pump Locking Ring<br><br>310-146 |

## Removal

**1.** WARNINGS:

Place the vehicle in a quarantined area and arrange "No Smoking/Petrol Fumes" signs about the vehicle.

Before any work is carried out on the fuel system, ground the vehicle to earth and maintain the ground connection until the work is complete.

Do not smoke or carry lighted tobacco or open flame of any type when working on or near any fuel related components. Highly flammable vapors are always present and may ignite. Failure to follow these instructions may result in personal injury.

The fuel system remains pressurized for a long time after the ignition is switched off. The fuel pressure must be relieved before attempting any repairs. Failure to follow these instructions may result in personal injury.

After carrying out repairs, the fuel system must be checked visually for leaks. Failure to follow these instructions may result in personal injury.

This procedure involves fuel handling. Be prepared for fuel spillage at all times and always observe fuel handling precautions. Failure to follow these instructions may result in personal injury.

If taken internally do not induce vomiting, seek immediate medical attention. Failure to follow these instructions may result in personal injury.

If fuel contacts the eyes, flush the eyes with cold water or eyewash solution and seek medical attention.

Wash hands thoroughly after handling, as prolonged contact may cause irritation. Should irritation develop, seek medical attention.

- NOTE: For vehicles with worm drive clamp, refer to step 13.
- NOTE: For vehicles with fuel pump locking ring, refer to steps 14.

Open the fuel tank filler pipe flap.

**2.** Disconnect the battery ground cable.

**3.** Detach the fuel tank filler pipe cap.

**4.** De-pressurize the fuel system.
For additional information, refer to: Fuel System Pressure Release (310-00 Fuel System - General Information, General Procedures).

**5.** Remove the rear seat cushion.
For additional information, refer to: Rear Seat Cushion (501-10 Seating, Removal and Installation).

GETtheMANUALS.org

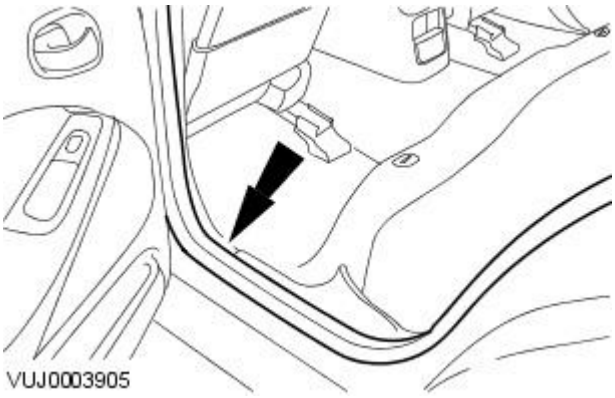


**6.** Detach and reposition the door opening weatherstrip.

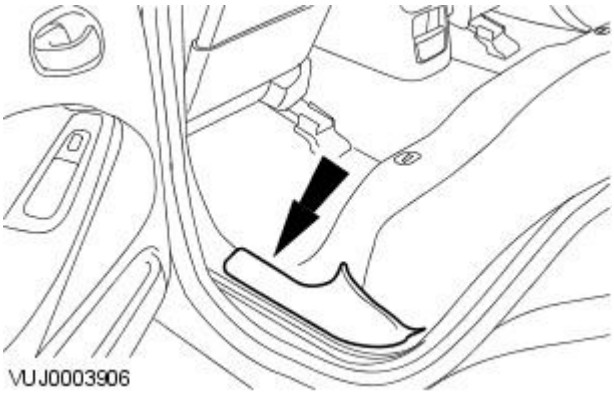


**7.** Remove the scuff plate trim panel.

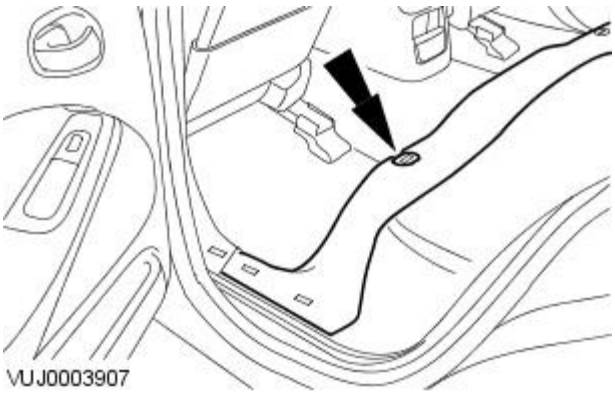


**8.** Detach and reposition the floor covering.

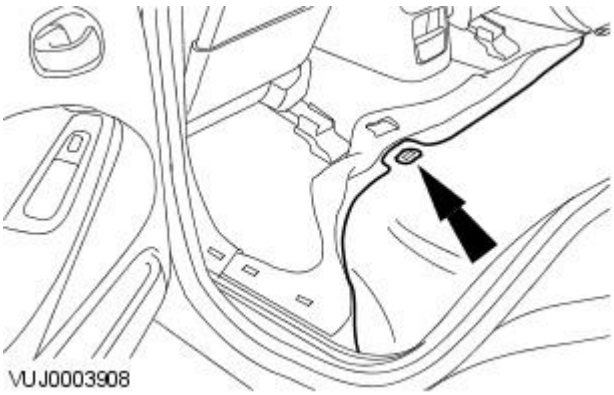


**9.** Detach and reposition the rear seat cushion insulation.

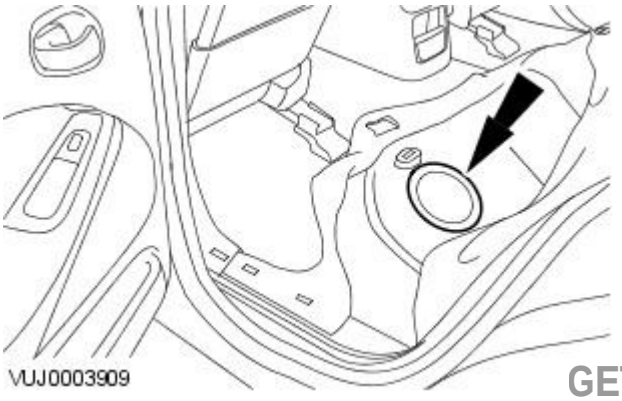


**10.** Remove the floor aperture cover.

GETtheMANUALS.org

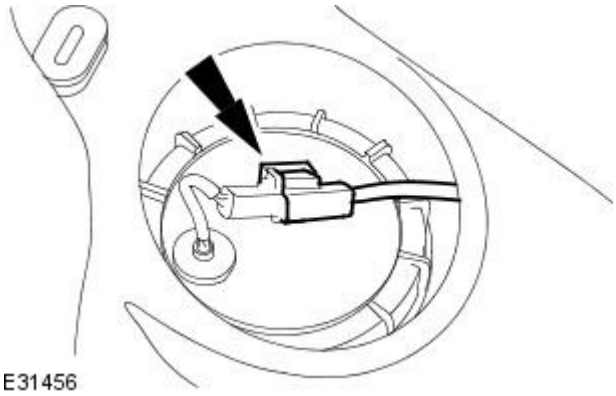


**11.** Detach the fuel transfer pump module electrical connector from the retaining bracket.

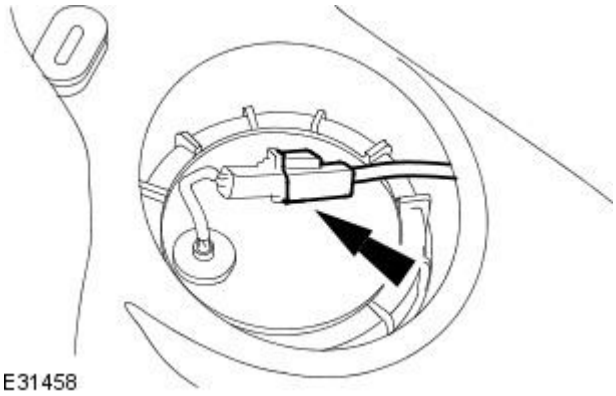


**12.** Disconnect the fuel transfer pump electrical connector.

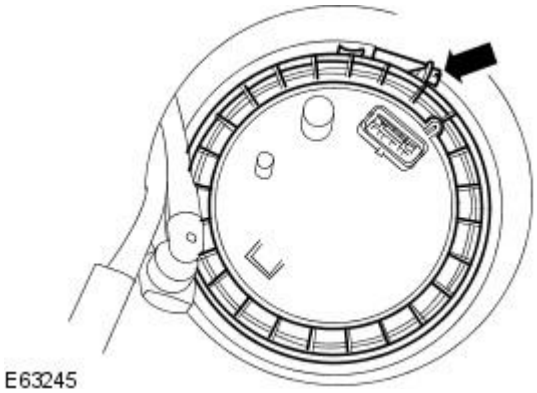


**13.** NOTE: For vehicles with worm drive clamp.

Remove the fuel pump module worm drive clamp.

- Remove and discard the O-ring seal.

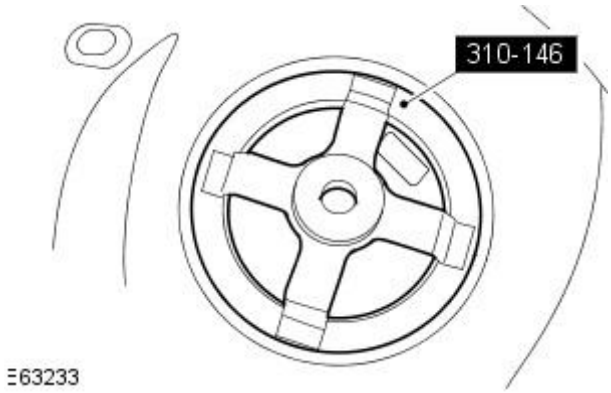


**14.** NOTE: For vehicles with fuel pump locking ring.

Using the special tool, remove the fuel pump module locking ring.

- Remove and discard the O-ring seal.

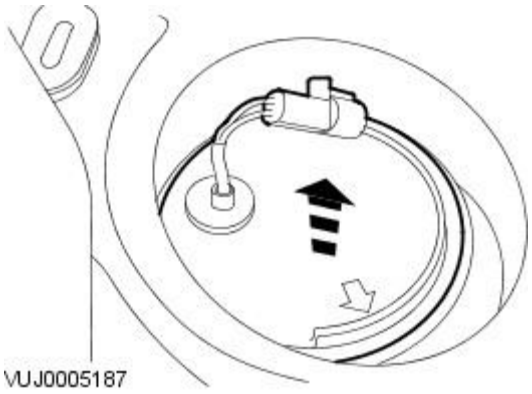


**15.** NOTE: All vehicles.

Detach and reposition the upper part of the fuel transfer pump.

GETtheMANUALS.org

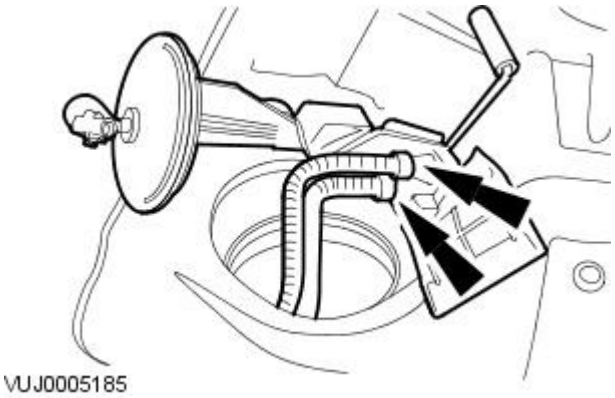


**16.** CAUTION: Make sure no damage occurs to the fuel level float.

Remove the fuel transfer pump.

- Disconnect the fuel cross over lines.

## Installation

• WARNINGS:

Place the vehicle in a quarantined area and arrange "No Smoking/Petrol Fumes" signs about the vehicle.

Before any work is carried out on the fuel system, ground the vehicle to earth and maintain the ground connection until the work is complete.

Do not smoke or carry lighted tobacco or open flame of any type when working on or near any fuel related components. Highly flammable vapors are always present and may ignite. Failure to follow these instructions may result in personal injury.

The fuel system remains pressurized for a long time after the ignition is switched off. The fuel pressure must be relieved before attempting any repairs. Failure to follow these instructions may result in personal injury.

After carrying out repairs, the fuel system must be checked visually for leaks. Failure to follow these instructions may result in personal injury.

This procedure involves fuel handling. Be prepared for fuel spillage at all times and always observe fuel handling precautions. Failure to follow these instructions may result in personal injury.

If taken internally do not induce vomiting, seek immediate medical attention. Failure to follow these instructions may result in personal injury.

If fuel contacts the eyes, flush the eyes with cold water or eyewash solution and seek medical attention.

Wash hands thoroughly after handling, as prolonged contact may cause irritation. Should irritation develop, seek medical attention.

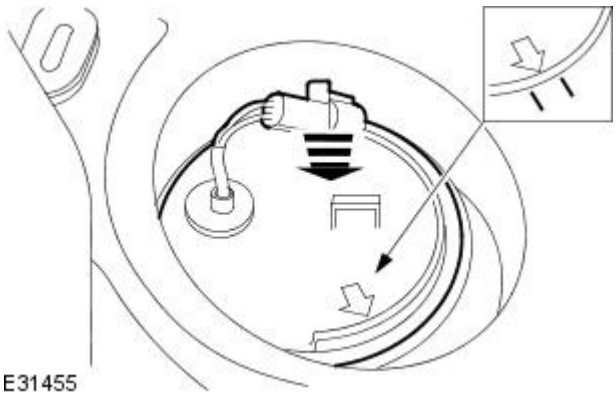


**1.** CAUTIONS:

Vehicles with supercharger - make sure the arrow on the left-hand fuel pump module lines up with the 'SC' marker on the fuel tank.

Vehicles without supercharger - make sure the arrow on the fuel transfer pump lines up with the 'NA' marker on the fuel tank.

Make sure no damage occurs to the fuel level float.

• NOTE: Install a new gasket to the fuel transfer pump flange.

• NOTE: Take care not to stretch the gasket.

To install, reverse the removal procedure.

**2.** NOTE: For vehicles with fuel pump locking ring.

Using the special tool, install the fuel pump module locking ring.

- Install a new O-ring seal.
- Tighten to 60 Nm.

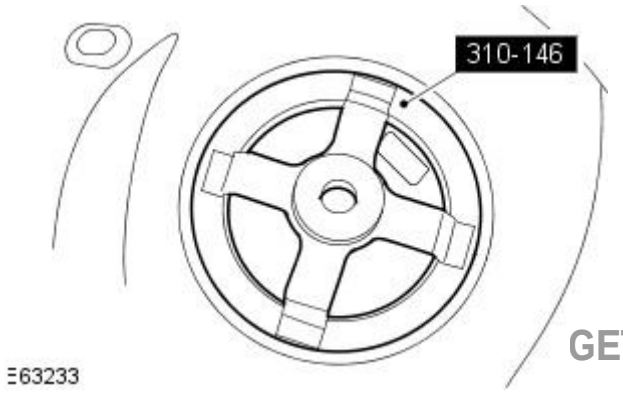


GETtheMANUALS.org

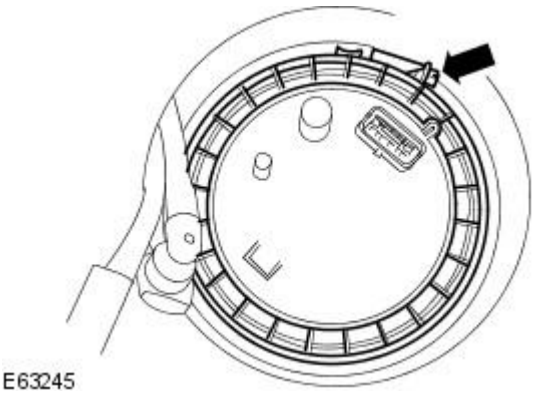


**3.** CAUTION: If the vehicle is fitted with a worm drive clamp which is not fitted with a shear off cap, tighten the clamp to 4Nm.

• NOTE: For vehicles with worm drive clamp.

Install the fuel pump module worm drive clamp.

- Tighten the clamp until the cap shears off.

GETtheMANUALS.org

# Fuel Tank and Lines - Fuel Transfer UnitV8 4.2L Petrol/V8 S/C 4.2L Petrol/2.5L NA V6 - AJV6/3.0L NA V6 - AJ27, VIN Range: N52048->N99999

Removal and Installation

| Special Tool(s) | |
|---|---|
| 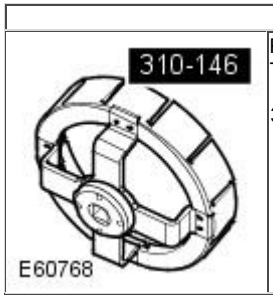  | Remover/Installer, Fuel Pump Module/Fuel Transfer Pump Locking Ring<br><br>310-146 |

## Removal

• WARNINGS:

Place the vehicle in a quarantined area and arrange "No Smoking/Petrol Fumes" signs about the vehicle.

Before any work is carried out on the fuel system, ground the vehicle to earth and maintain the ground connection until the work is complete.

Do not smoke or carry lighted tobacco or open flame of any type when working on or near any fuel related components. Highly flammable vapors are always present and may ignite. Failure to follow these instructions may result in personal injury.

The fuel system remains pressurized for a long time after the ignition is switched off. The fuel pressure must be relieved before attempting any repairs. Failure to follow these instructions may result in personal injury.

After carrying out repairs, the fuel system must be checked visually for leaks. Failure to follow these instructions may result in personal injury.

This procedure involves fuel handling. Be prepared for fuel spillage at all times and always observe fuel handling precautions. Failure to follow these instructions may result in personal injury.

If taken internally do not induce vomiting, seek immediate medical attention. Failure to follow these instructions may result in personal injury.

If fuel contacts the eyes, flush the eyes with cold water or eyewash solution and seek medical attention.

Wash hands thoroughly after handling, as prolonged contact may cause irritation. Should irritation develop, seek medical attention.

• NOTE: For vehicles with worm drive clamp, refer to steps 14 and 25.

• NOTE: For vehicles with fuel pump locking ring, refer to steps 15 and 26.

**1.** NOTE: All vehicles

Open the fuel tank filler pipe flap.

**2.** Disconnect the battery ground cable.
For additional information, refer to: Battery Disconnect and Connect (414-01 Battery, Mounting and Cables, General Procedures).

**3.** Detach the fuel tank filler pipe cap.

**4.** Release the pressure in the fuel system.
For additional information, refer to: Fuel System Pressure Release (310-00 Fuel System - General Information, General Procedures).

**5.** Drain the fuel system.
For additional information, refer to: Fuel Tank Draining - VIN Range: N52048->N99999 (310-00 Fuel System - General Information, General Procedures).

**6.** Remove the rear seat cushion.
For additional information, refer to: Rear Seat Cushion (501-10 Seating, Removal and Installation).

GETtheMANUALS.org

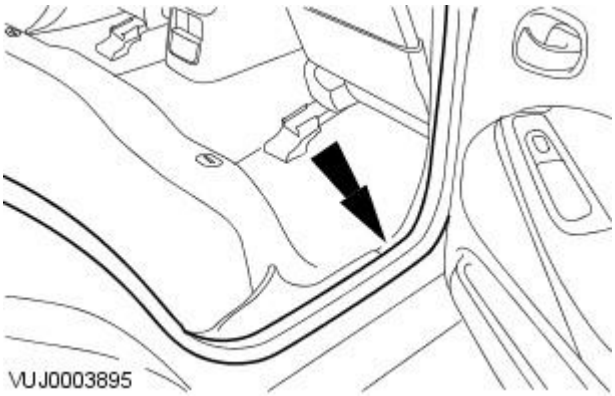


**7.** Detach and reposition the door opening weatherstrip.

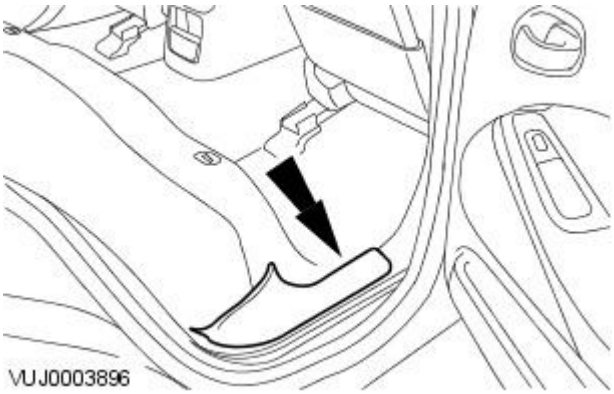


**8.** Remove the scuff plate trim panel.

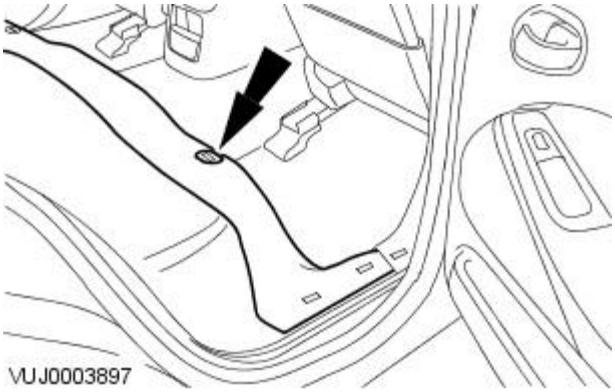


**9.** Detach and reposition the floor covering.

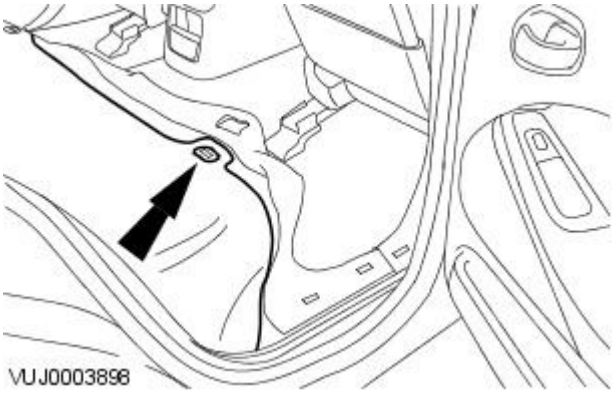


**10.** Detach and reposition the rear seat cushion insulation.

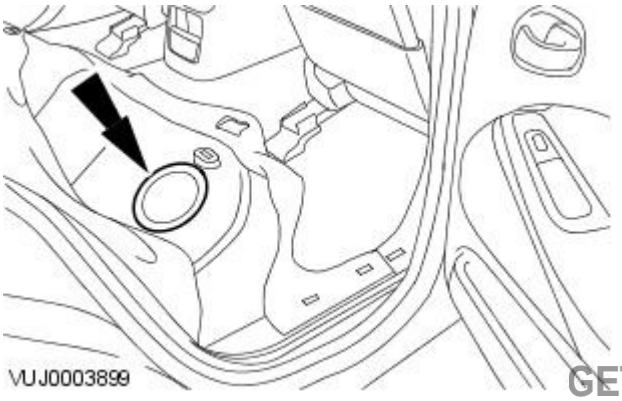


**11.** Remove the floor aperture cover.

GETtheMANUALS.org

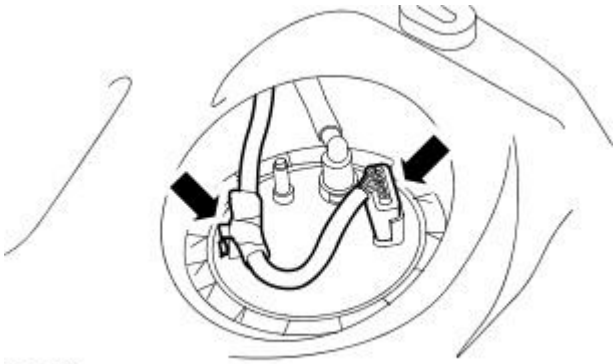

E63231

**12.** Disconnect the fuel pump module electrical connector.

- Detach the fuel pump module wiring harness from the retaining bracket.

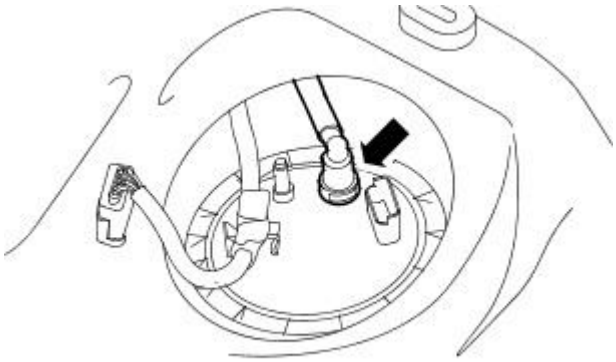

E63232

**13.** Disconnect the fuel pump module quick release coupling.

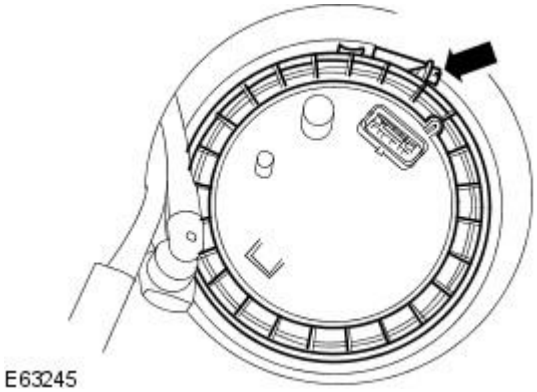

E63245

**14.** NOTE: For vehicles with worm drive clamp.

Remove the fuel pump module worm drive clamp.

- Remove and discard the O-ring seal.

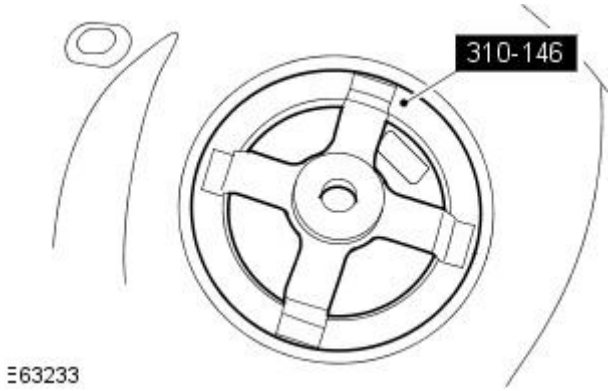


E63233

**15.** NOTE: For vehicles with fuel pump locking ring.

Using the special tool, remove the fuel pump module locking ring.

- Remove and discard the O-ring seal.

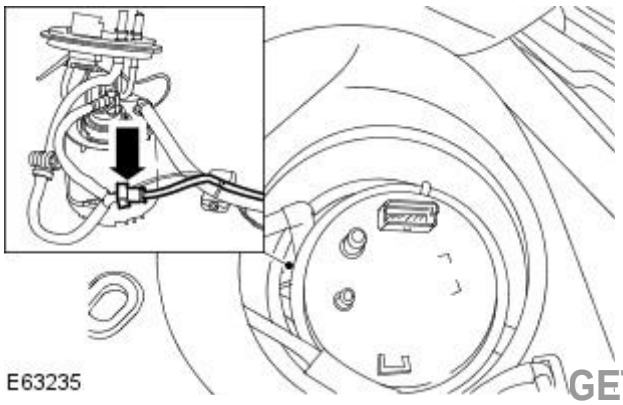

E63235

**16.** NOTE: All vehicles.

Disconnect the fuel transfer unit transfer feed tube.

GETtheMANUALS.org

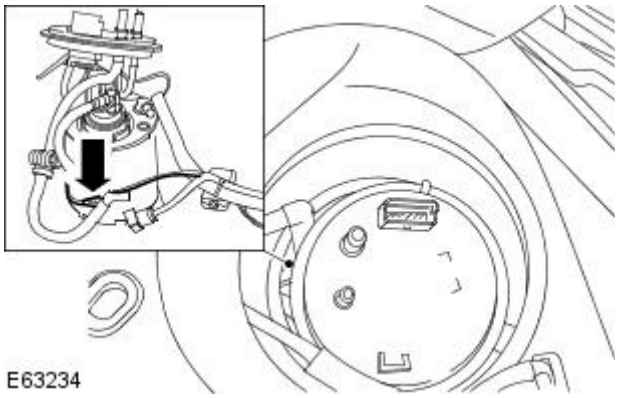


**17.** Disconnect the left-hand fuel sender gauge electrical connector.

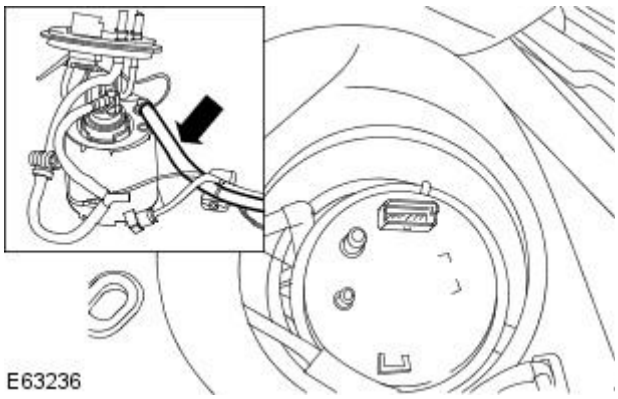


**18.** Disconnect the fuel transfer unit transfer return tube.

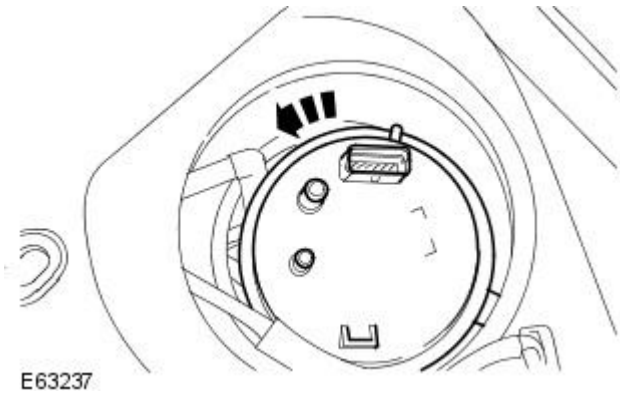


**19.** Release the fuel pump module.

- Press down and rotate the fuel pump module counter-clockwise.

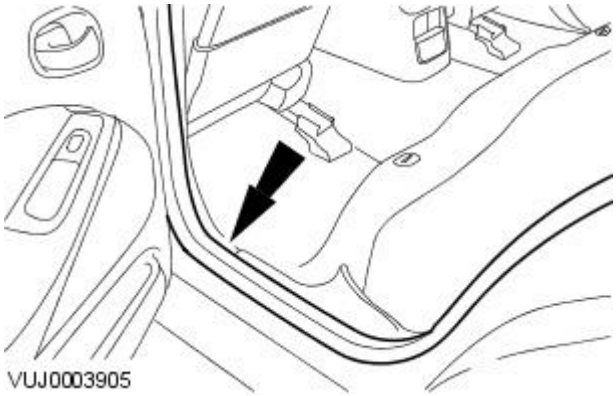


**20.** Detach and reposition the door opening weatherstrip.

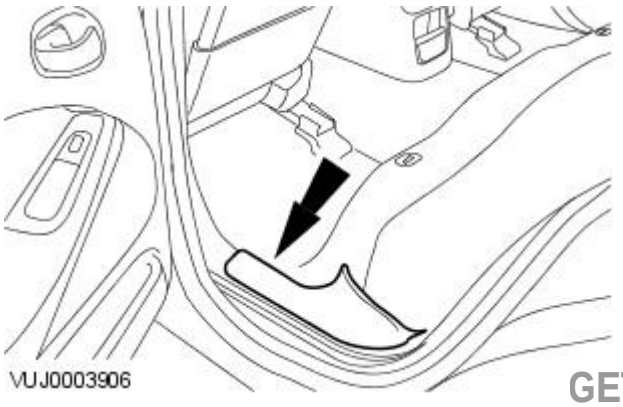


**21.** Remove the scuff plate trim panel.

GETtheMANUALS.org

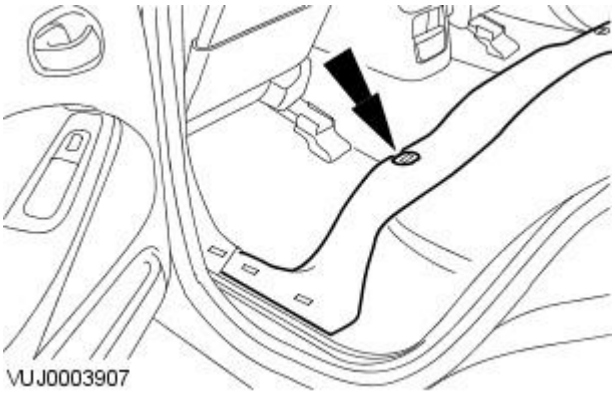


**22.** Detach and reposition the floor covering.

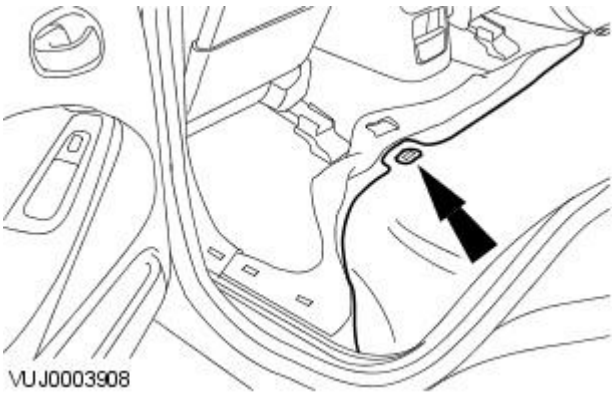


**23.** Detach and reposition the rear seat cushion insulation.

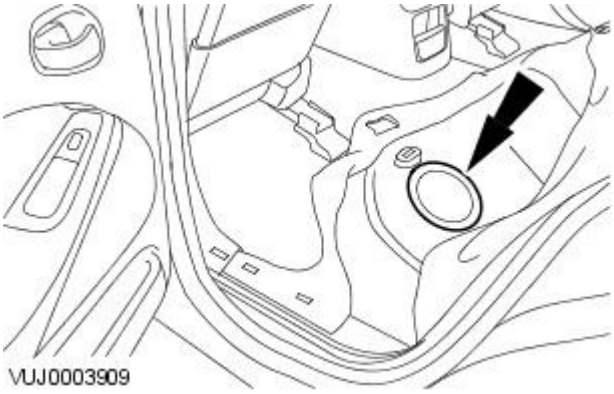


**24.** Remove the floor aperture cover.

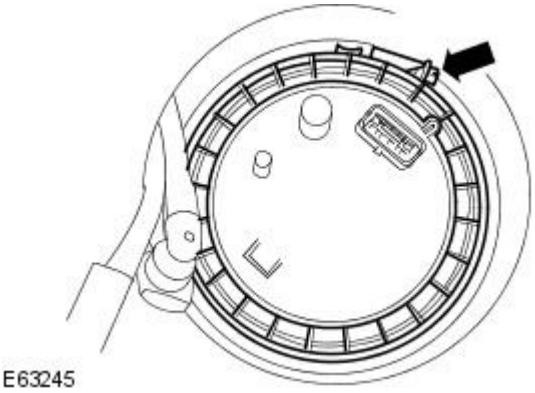


**25.** NOTE: For vehicles with worm drive clamp.

Remove and discard the fuel transfer unit worm drive clamp.

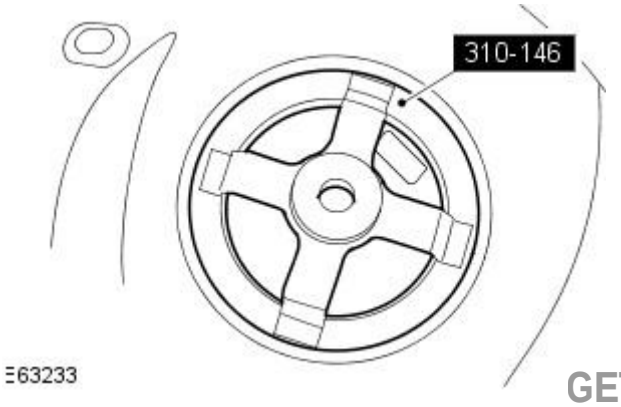


**26.** NOTE: For vehicles with fuel pump locking ring.

Using the special tool, remove the fuel transfer unit locking ring.

GETtheMANUALS.org

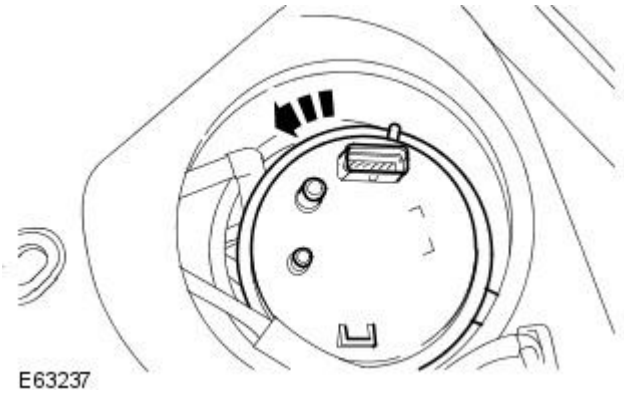


**27.** CAUTION: Make sure no damage occurs to the fuel level float.

• NOTE: All vehicles.

Remove the fuel transfer unit.

- Press down and rotate the base of the fuel transfer unit counter-clockwise.
- Remove and discard the O-ring seal.

## Installation

• NOTE: For vehicles with fuel pump locking ring, refer to steps 2 and 13.

• NOTE: For vehicles with worm drive clamp, refer to steps 3 and 14.

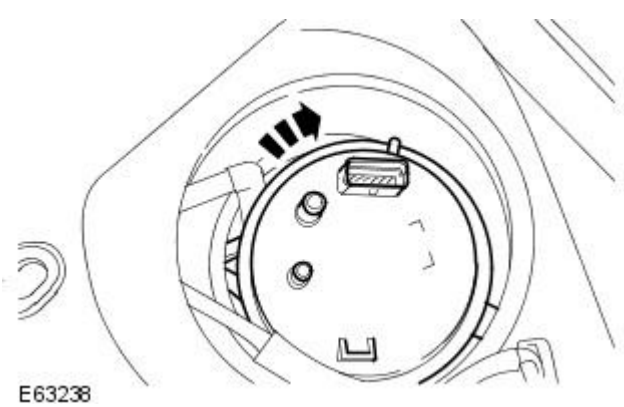


**1.** CAUTION: Make sure no damage occurs to the fuel level float.

• NOTE: All vehicles.

Install the fuel transfer unit.

- Press down and rotate the base of the fuel transfer unit clockwise.
- Install a new O-ring seal.

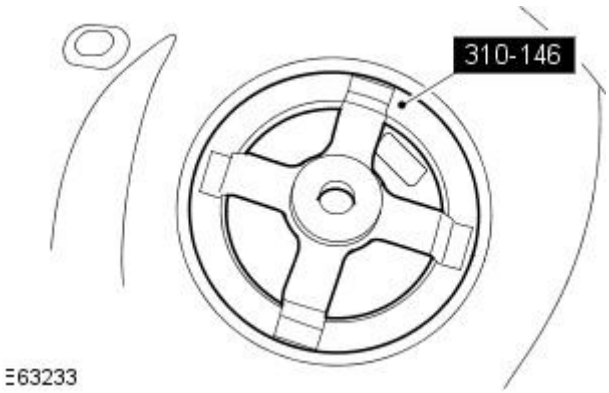


**2.** NOTE: For vehicles with fuel pump locking ring.

Using the special tool, install the fuel transfer unit locking ring.

- Tighten to 60 Nm.

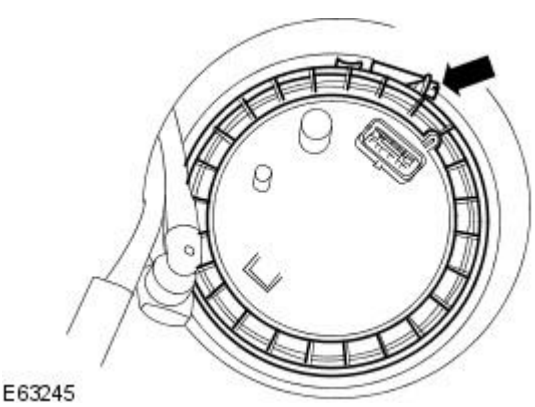


**3.** CAUTION: If the vehicle is fitted with a worm drive clamp which is not fitted with a shear off cap, tighten the clamp to 4Nm.

• NOTE: For vehicles with worm drive clamp.

Install the new fuel transfer unit worm drive clamp.

- Tighten the clamp until the cap shears off.

GETtheMANUALS.org

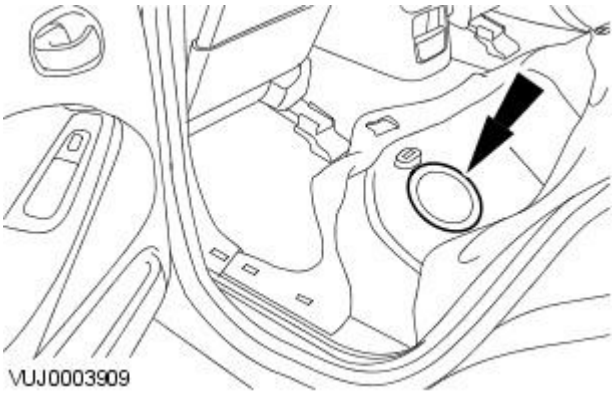


**4.** NOTE: All vehicles.

Install the floor aperture cover.

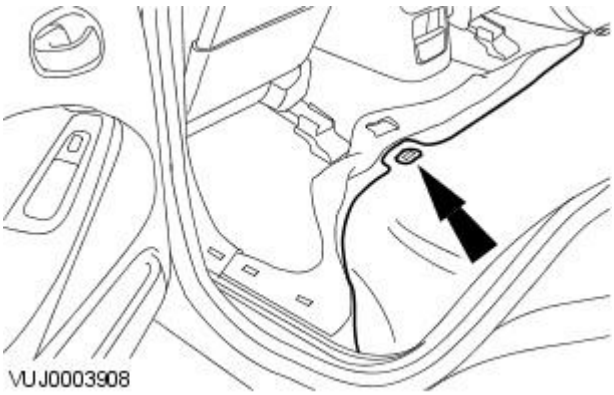


**5.** Attach the rear seat cushion insulation.

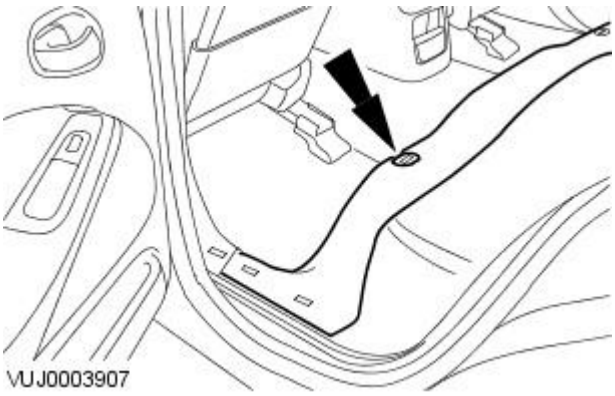


**6.** Attach the floor covering.

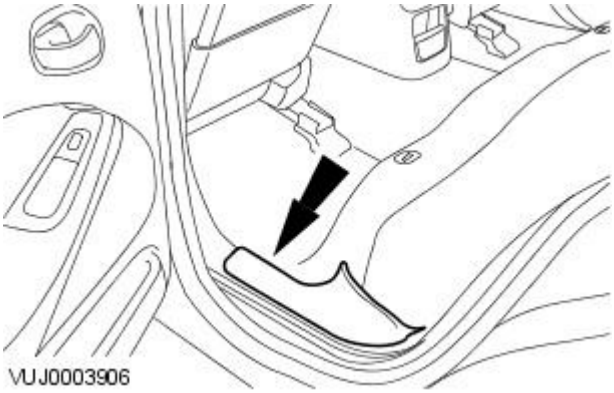


**7.** Install the scuff plate trim panel.

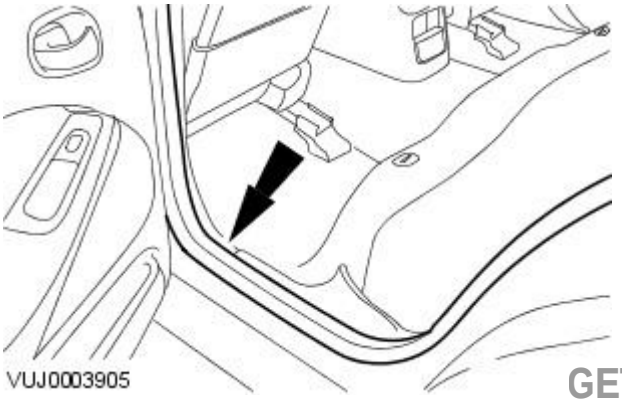


**8.** Attach the door opening weatherstrip.

GETtheMANUALS.org

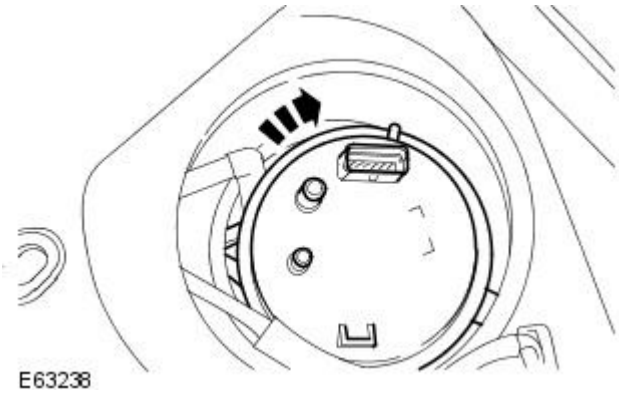


**9.** CAUTIONS:

On vehicles with supercharger make sure the arrow on the fuel pump module and the 'SC' marker on the fuel tank are aligned.

On vehicles without supercharger make sure the arrow on the fuel transfer module and the 'NA' marker on the fuel tank are aligned.

Secure the fuel pump module.

- Press down and rotate the base of the fuel pump module clockwise.

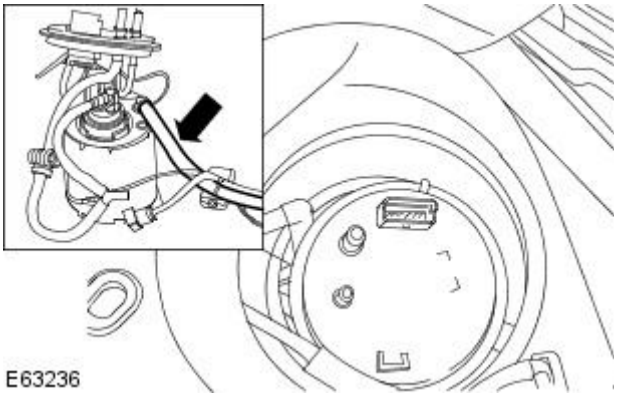


**10.** Connect the fuel transfer unit transfer return tube.

- Make sure the coupling has latched onto the fuel pump module by pulling the tube after the connection has been made.

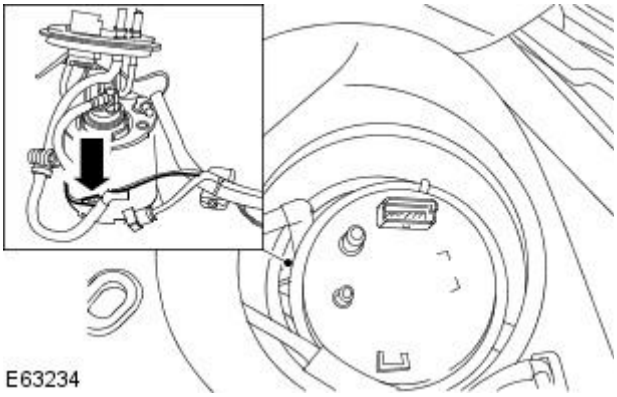


**11.** Connect the left-hand fuel sender gauge electrical connector.

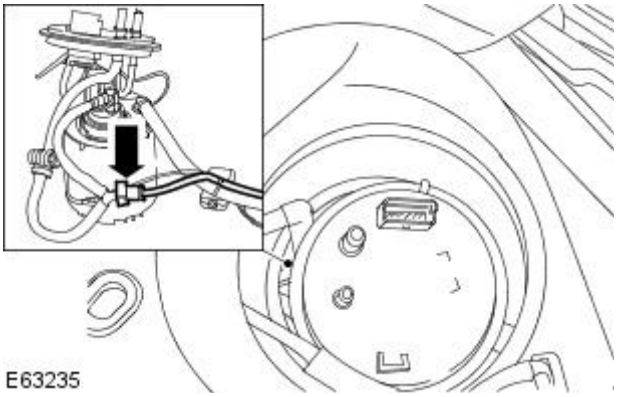


**12.** Connect the fuel transfer unit transfer feed tube.

- Make sure the quick release coupling has latched onto the fuel pump module fuel tube by pulling the tube after the connection has been made.

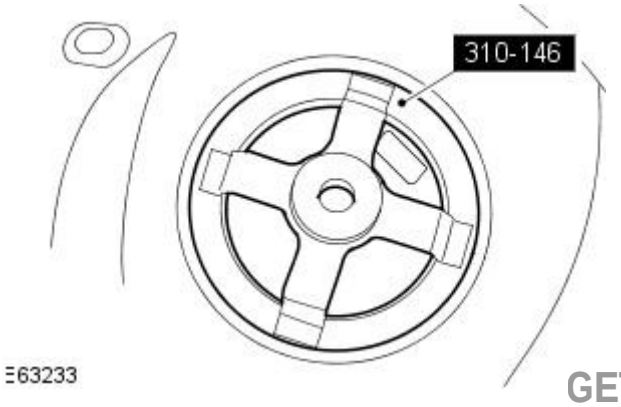


**13.** NOTE: For vehicles with fuel pump locking ring.

Using the special tool, install the fuel pump module locking ring.

- Install a new O-ring seal.
- Tighten to 60 Nm.

GETtheMANUALS.org

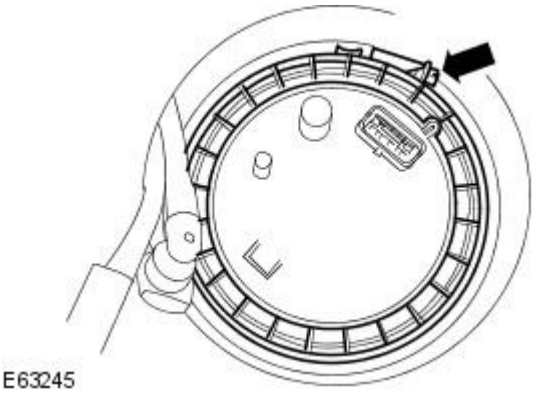


**14.** CAUTION: If the vehicle is fitted with a worm drive clamp which is not fitted with a shear off cap, tighten the clamp to 4Nm.

• NOTE: For vehicles with worm drive clamp.

Install the fuel pump module worm drive clamp..

- Tighten the clamp until the cap shears off.

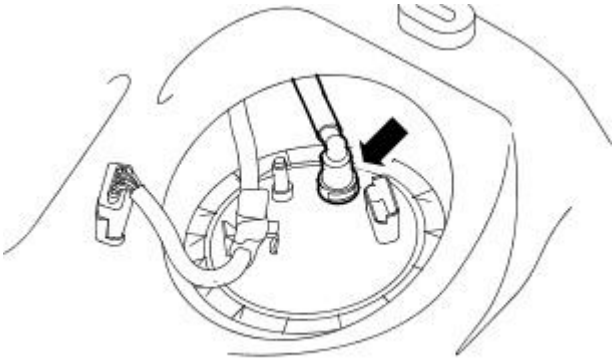


**15.** NOTE: All vehicles.

Connect the fuel pump module quick release coupling.

- Make sure the quick release coupling has latched onto the fuel pump module fuel pipe by pulling the pipe after the connection has been made.

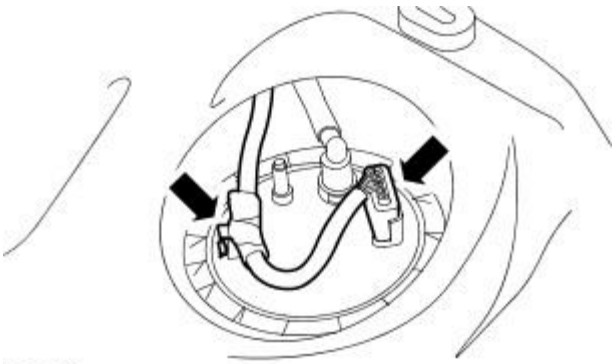


**16.** Connect the fuel pump module electrical connector.

- Attach the fuel pump module wiring harness to the retaining bracket.

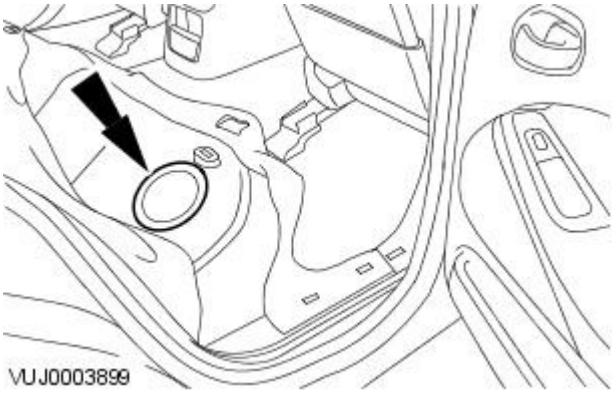


**17.** Install the floor aperture cover.

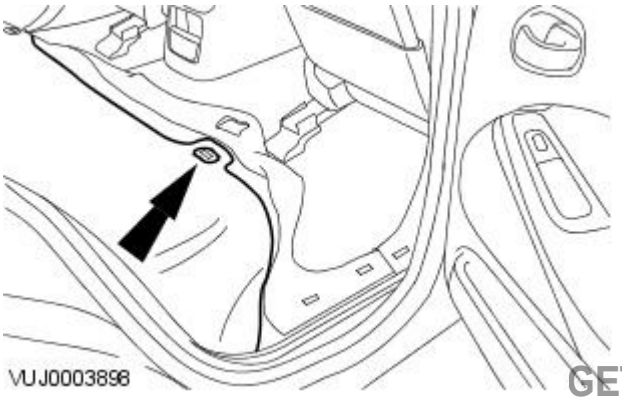


**18.** Attach the rear seat cushion insulation.

GETtheMANUALS.org

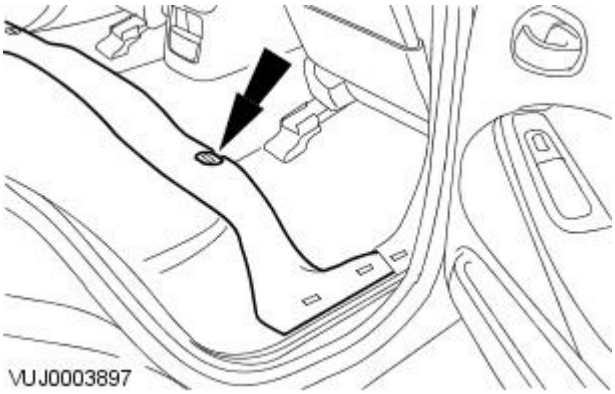


**19.** Attach the floor covering.

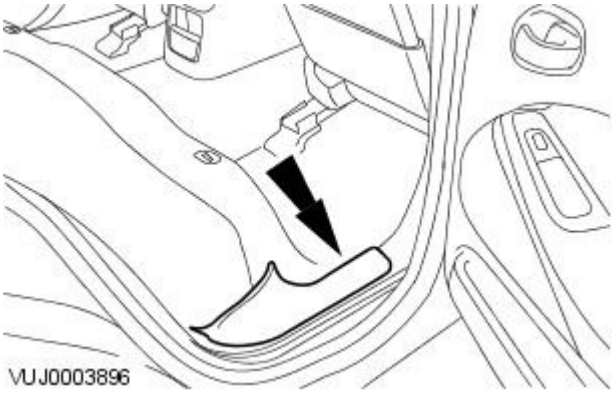


**20.** Install the scuff plate trim panel.

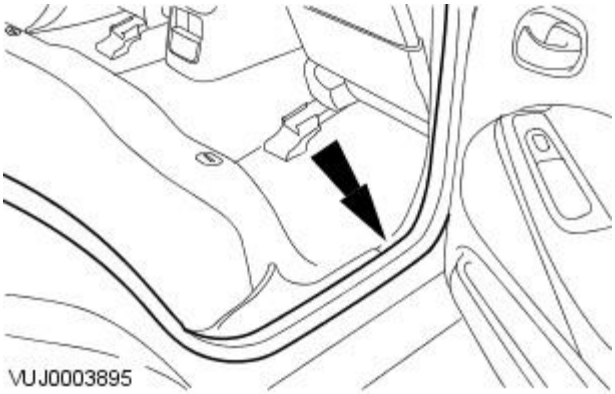


**21.** Attach the door opening weatherstrip.

**22.** Install the rear seat cushion.
For additional information, refer to: Rear Seat Cushion (501-10 Seating, Removal and Installation).

**23.** Attach the fuel tank filler pipe cap.

**24.** Connect the battery ground cable.
For additional information, refer to: Battery Connect (414-01 Battery, Mounting and Cables, General Procedures).

**25.** Close the fuel tank filler pipe flap.

GETtheMANUALS.org

# Fuel Tank and Lines - Fuel Transfer Unit2.7L V6 - TdV6

Removal and Installation

| Special Tool(s) | |
|---|---|
| 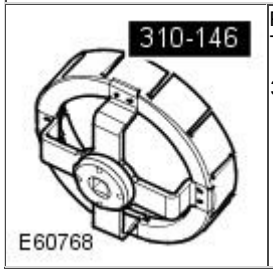  | Remover/Installer, Fuel Pump Module/Fuel Transfer Pump Locking Ring<br><br>310-146 |

## Removal

**1.** WARNINGS:

Place the vehicle in a quarantined area and arrange "No Smoking/Petrol Fumes" signs about the vehicle.

Before any work is carried out on the fuel system, ground the vehicle to earth and maintain the ground connection until the work is complete.

Do not smoke or carry lighted tobacco or open flame of any type when working on or near any fuel related components. Highly flammable vapors are always present and may ignite. Failure to follow these instructions may result in personal injury.

The fuel system remains pressurized for a long time after the ignition is switched off. The fuel pressure must be relieved before attempting any repairs. Failure to follow these instructions may result in personal injury.

After carrying out repairs, the fuel system must be checked visually for leaks. Failure to follow these instructions may result in personal injury.

This procedure involves fuel handling. Be prepared for fuel spillage at all times and always observe fuel handling precautions. Failure to follow these instructions may result in personal injury.

If taken internally do not induce vomiting, seek immediate medical attention. Failure to follow these instructions may result in personal injury.

If fuel contacts the eyes, flush the eyes with cold water or eyewash solution and seek medical attention.

Wash hands thoroughly after handling, as prolonged contact may cause irritation. Should irritation develop, seek medical attention.

Open the fuel tank filler pipe flap.

**2.** Disconnect the battery.
For additional information, refer to: Battery Disconnect and Connect (414-01 Battery, Mounting and Cables, General Procedures).

**3.** Detach the fuel tank filler pipe cap.

**4.** Remove the rear seat cushion.
For additional information, refer to: Rear Seat Cushion (501-10 Seating, Removal and Installation).

**5.** Detach and reposition the door opening weatherstrip.

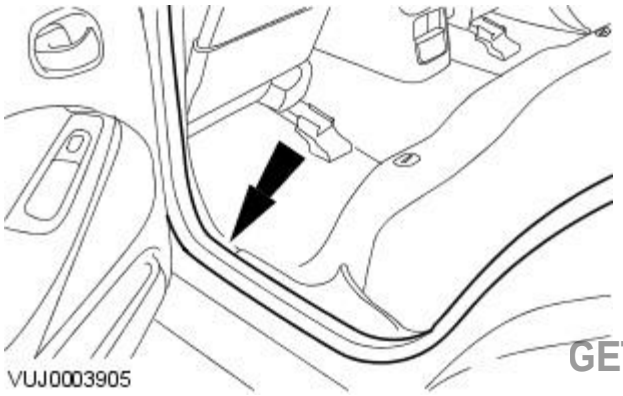


GETtheMANUALS.org

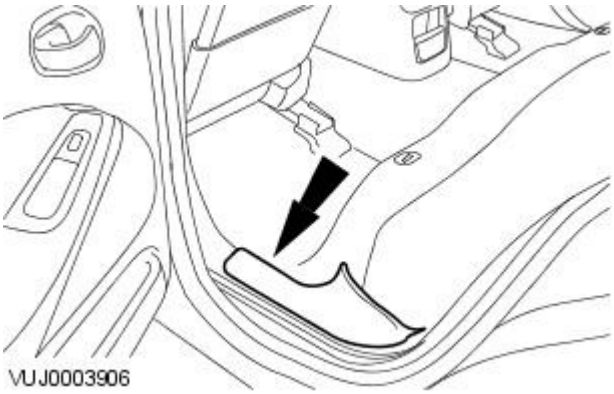


**6.** Remove the scuff plate trim panel.

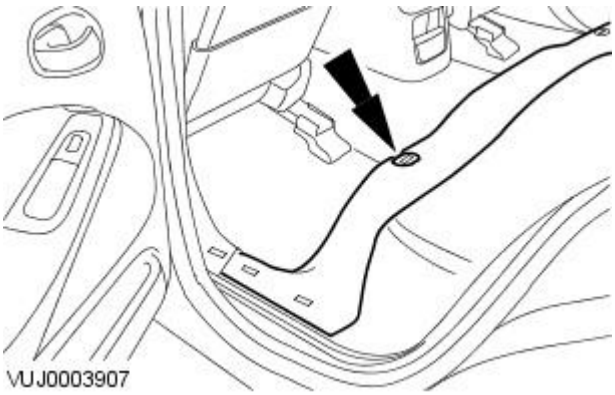


**7.** Detach and reposition the floor covering.

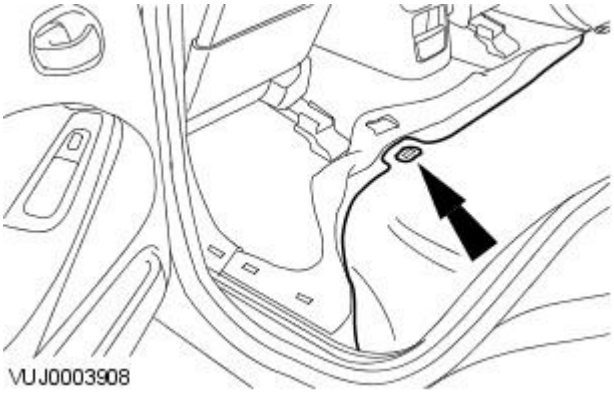


**8.** Detach and reposition the rear seat cushion insulation.

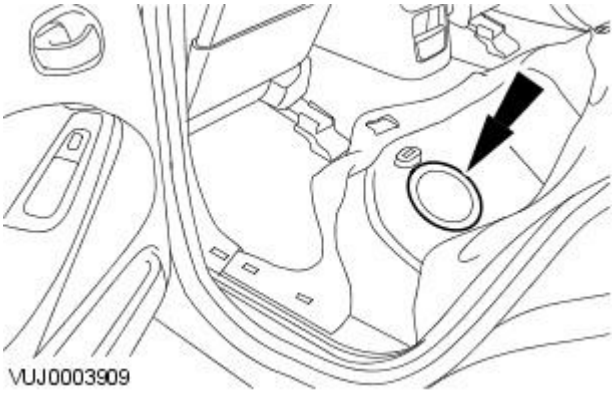


**9.** Remove the floor aperture cover.

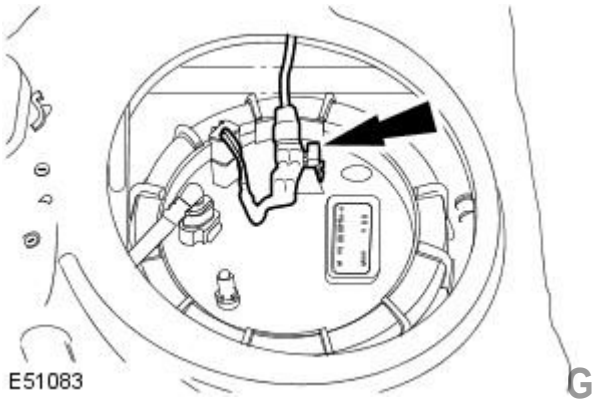


**10.** Detach the fuel level sensor module electrical connector from the retaining bracket.

GETtheMANUALS.org

**11.** Disconnect the fuel level sensor electrical connector.

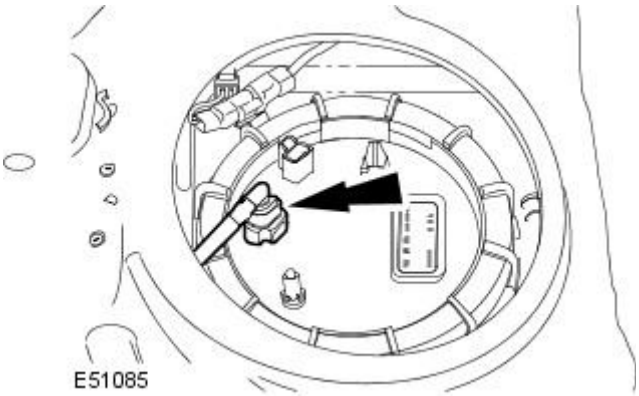


**12.** Disconnect the fuel return line from the fuel level sensor.
For additional information, refer to: Quick Release Coupling - Push Connect (310-00 Fuel System - General Information, General Procedures).

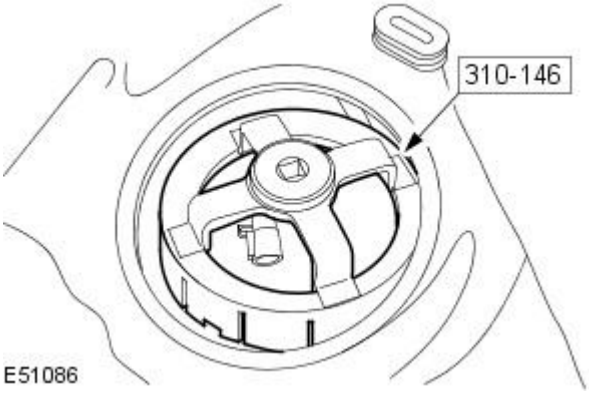


**13.** CAUTION: Make sure no damage occurs to the fuel level sensor when removing the locking ring. Failure to follow this instruction will result in damage to the vehicle.

Using the special tool, remove the fuel level sensor locking ring.

**14.** Detach and reposition the upper part of the fuel level sensor.

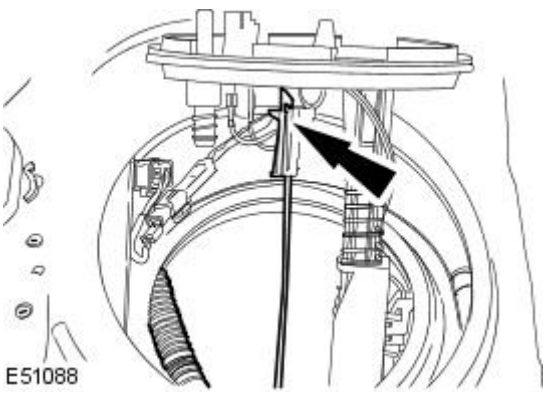


**15.** CAUTION: Make sure no damage occurs to the fuel level float.

Detach the fuel transfer pipe retaining clip.

GETtheMANUALS.org

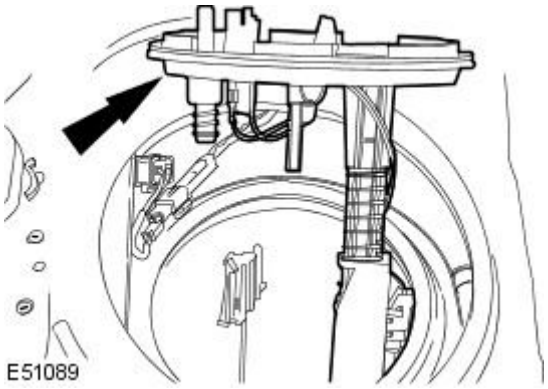


**16.** CAUTION: Make sure no damage occurs to the fuel level float.

Remove the fuel level sensor.

## Installation

• WARNINGS:

Place the vehicle in a quarantined area and arrange "No Smoking/Petrol Fumes" signs about the vehicle.

Before any work is carried out on the fuel system, ground the vehicle to earth and maintain the ground connection until the work is complete.

Do not smoke or carry lighted tobacco or open flame of any type when working on or near any fuel related components. Highly flammable vapors are always present and may ignite. Failure to follow these instructions may result in personal injury.

The fuel system remains pressurized for a long time after the ignition is switched off. The fuel pressure must be relieved before attempting any repairs. Failure to follow these instructions may result in personal injury.

After carrying out repairs, the fuel system must be checked visually for leaks. Failure to follow these instructions may result in personal injury.

This procedure involves fuel handling. Be prepared for fuel spillage at all times and always observe fuel handling precautions. Failure to follow these instructions may result in personal injury.

If taken internally do not induce vomiting, seek immediate medical attention. Failure to follow these instructions may result in personal injury.

If fuel contacts the eyes, flush the eyes with cold water or eyewash solution and seek medical attention.

Wash hands thoroughly after handling, as prolonged contact may cause irritation. Should irritation develop, seek medical attention.

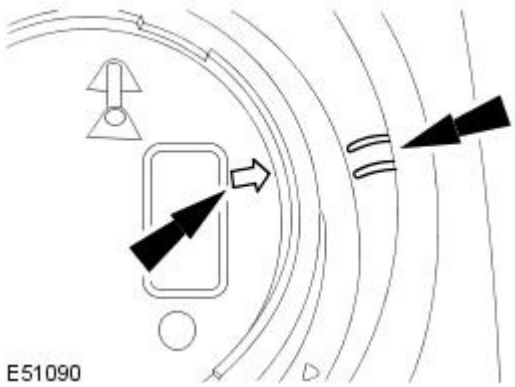


**1.** CAUTIONS:

Make sure no damage occurs to the fuel level float.

Make sure the fuel level sensor flange alignment mark aligns with the arrow on the fuel tank.

• NOTE: Install a new gasket to the fuel level sensor flange.

• NOTE: Take care not to stretch the gasket.

To install, reverse the removal procedure.

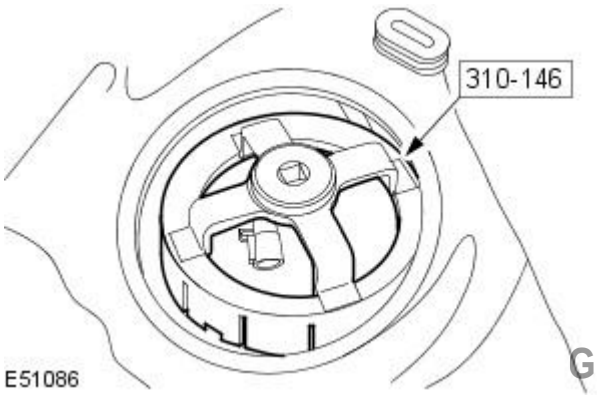


**2.** CAUTION: Make sure no damage occurs to the fuel level sensor when installing the locking ring.

Tighten to 60 Nm.

GETtheMANUALS.org

# Fuel Tank and Lines - Inertia Fuel Shutoff (IFS) Switch

Removal and Installation

## Removal

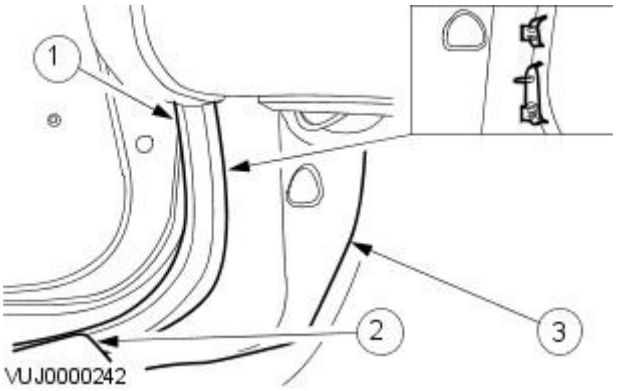


**1.** Remove the cowl side trim panel.

1. Detach the door opening weatherstrip.
2. Detach the scuff plate trim panel.
3. Remove the cowl side trim panel.

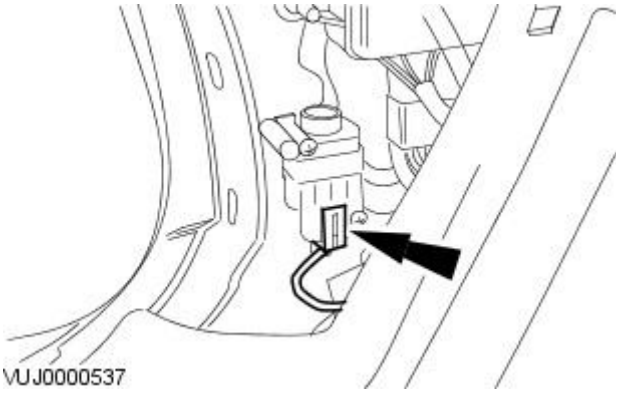


**2.** Disconnect the inertia fuel shutoff (IFS) switch electrical connector.

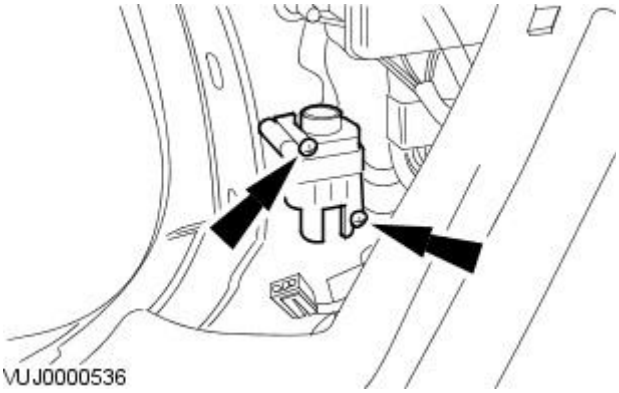


**3.** Remove the IFS switch.

## Installation

**1.** To install, reverse the removal procedure.

GETtheMANUALS.org

# Acceleration Control -

**Torque Specifications**

| Description | Nm | lb-ft | lb-in |
|---|---|---|---|
| Acceleratror pedal | 10 | 7 | 89 |

GETtheMANUALS.org

# Acceleration Control - Acceleration Control

Description and Operation

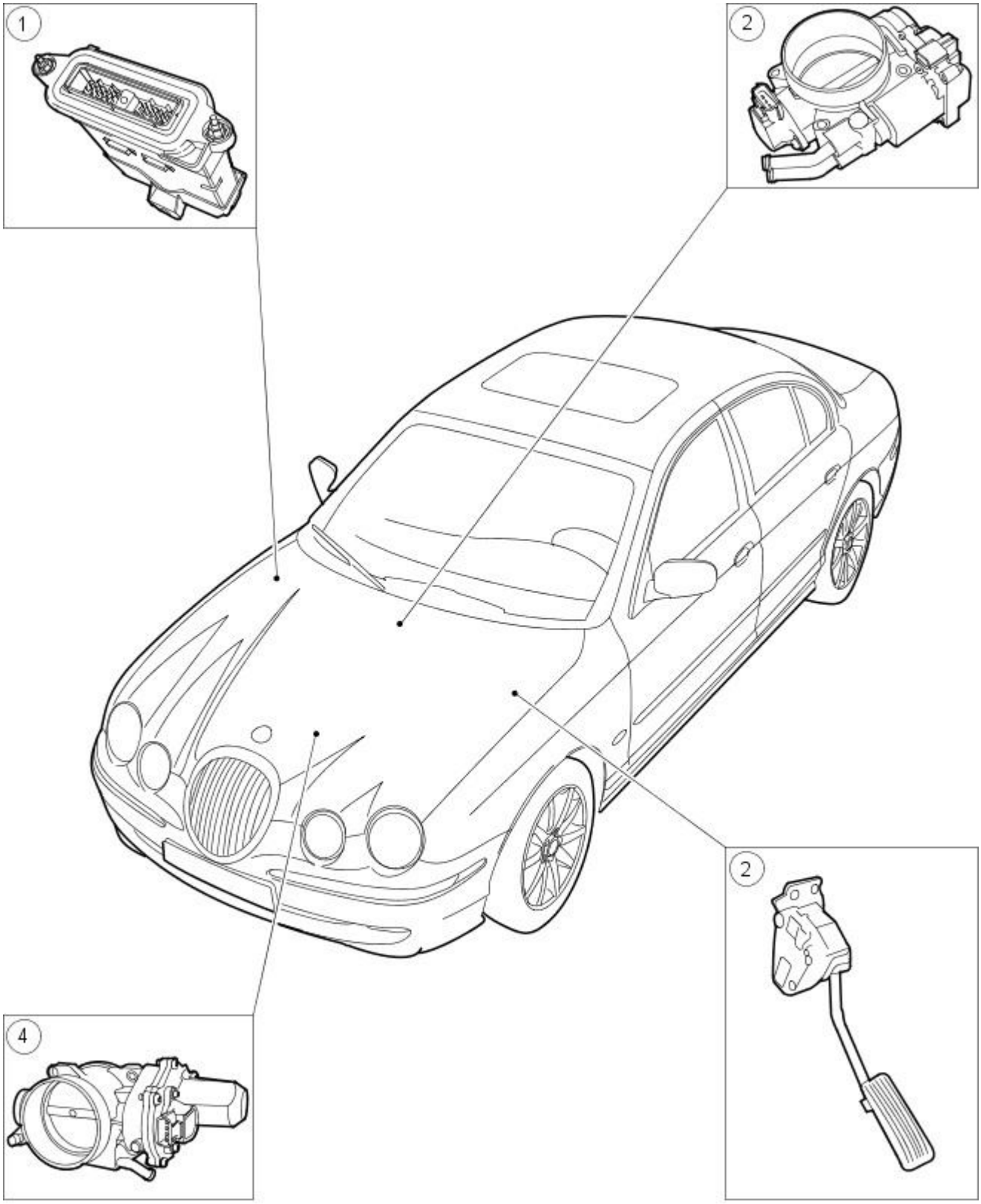


E30322

| Item | Part Number | Description |
|---|---|---|
| 1 | — | Engine control module (ECM) |
| 2 | — | Throttle body. (Vehicles with supercharger) |
| 3 | — | Accelerator pedal |
| 4 | - | Throttle body. (Vehicles without supercharger) |

When the accelerator pedal is applied, the two accelerator position sensors measure the pedal movement and provide an output voltage proportional to pedal movement to the engine control module (ECM). Two sensors are used as a safety feature. The accelerator pedal has two return springs to guarantee the accelerator returns to the zero position when the pedal is released. Whilst comparison checks are carried out on the accelerator pedal for rational values, communications within the ECM are monitored for rational values and responses.

The ECM then provides an output, based on the accelerator pedal position, which drives a DC motor which positions the throttle blade at the requested angle. The throttle blade position is monitored by two sensors for rational value.

The acceleration control system has the necessary safety features to monitor the correct operation of all the components. Depending on the failure state, the acceleration control system can be put in appropriate safe state, from restricting the RPM to limphome mode.

GETTHEMANUALS.com

# Acceleration Control - Acceleration Control

Diagnosis and Testing

1. **1.** Verify the customer concern by operating the system.
2. **2.** Visually inspect for obvious signs of mechanical or electrical damage.
3. **3.** If an obvious cause for an observed or reported concern is found, correct the cause (if possible) before proceeding to the next step.
4. **4.** If the concern is not visually evident, use a fault code reader to retrieve fault code reader to retreive fault codes before proceeding to the Symptom Chart.

**Symptom Chart**

| Symptom | Possible Sources | Action |
|---|---|---|
| DTC P1240, P1241, P1242 | * Accelerator pedal power supply circuit out of range | * GO to Pinpoint Test A. |
| DTC P1122, P1123, P1215, P1216, P1344 | * Accelerator pedal demand sensor output circuit out of range | * GO to Pinpoint Test B. |
| DTC P0121, P0122, P0123 | * Throttle position sensor circuit out of range | * GO to Pinpoint Test C. |
| DTC P1251, P1658, P1631, P1657 | * Throttle motor relay failure | * GO to Pinpoint Test D. |
| DTC P1243 | * Accelerator pedal demand sensor ground; open circuit | * GO to Pinpoint Test E. |
| DTC P1611, P1633 | * Engine control module (ECM) failure | * INSTALL a new ECM. For additional information, refer to Section 303-14A Electronic Engine ControlsSection 303-14B Electronic Engine ControlsSection 303-14C Electronic Engine Controls. |
| DTC P1254, P1250 | * Throttle limp home spring malfunction. | * INSTALL a new throttle body. For additional information refer to Section 303-14A Electronic Engine ControlsSection 303-14B Electronic Engine ControlsSection 303-14C Electronic Engine Controls. |

**PINPOINT TEST A : DTC P1240, P1241, P1242**

| TEST CONDITIONS | DETAILS/RESULTS/ACTIONS |
|---|---|
| **A1: CHECK THE POWER SUPPLY TO THE ACCELERATOR PEDAL DEMAND SENSOR** | |
| | 1 TURN the ignition switch to the RUN position. |
| | 2 Measure the voltage between electrical connector CA88 pin 5 (Y) and ground. |
| | 3 Measure the voltage between electrical connector CA88 pin 2 (Y) and ground. |
| | Is the voltage less than 4.5 volts?<br>**Yes**<br>GO to A2. .<br>**No**<br>DIAGNOSE the electronic engine control system. For additional information, refer to Section 303-14A Electronic Engine ControlsSection 303-14B Electronic Engine ControlsSection 303-14C Electronic Engine Controls. |
| **A2: CHECK CONTINUITY OF THE ACCELERATOR PEDAL DEMAND SENSOR POWER SUPPLY CIRCUIT** | |
| | 1 Turn the ignition switch to the OFF position. |
| | 2 Disconnect the ECM electrical connector PI 1 and the accelerator pedal electrical connector CA 88. |
| | 3 Measure the resistance between PI 1 pin 13 (Y) and CA88 pin 5 (Y). |
| | 4 Measure the resistance between PI 1 pin 12 (OY) and CA88 pin 2 (OY). |
| | Is the resistance less than 5 ohms?<br>**Yes**<br>GO to A3. .<br>**No**<br>REPAIR the power supply circuit from the ECM to the accelerator pedal. CLEAR the DTC. TEST the system for normal operation. |
| **A3: CHECK THE ACCELERATOR PEDAL DEMAND SENSOR POWER SUPPLY FOR A SHORT CIRCUIT TO GROUND** | |
| | 1 Measure the resistance between CA88 pin 5 (Y) and ground. |
| | 2 Measure the resistance between CA88 pin 2 (OY) and ground. |
| | Is the resistance greater than 10,000 ohms?<br>**Yes**<br>DIAGNOSE the electronic engine control system. For additional information, refer to Section 303-14A Electronic Engine ControlsSection 303-14B Electronic Engine ControlsSection 303-14C Electronic Engine Controls.<br>**No**<br>REPAIR the power supply circuit from the ECM to the accelerator pedal. CLEAR the DTC. TEST the system for normal operation. |

**PINPOINT TEST B : DTC P1122, P1123, P1215, P1216, P1344**

| TEST CONDITIONS | DETAILS/RESULTS/ACTIONS |
|---|---|
| **B1: CHECK THE ACCELERATOR PEDAL DEMAND SENSOR OUTPUT** | |
| | 1 Turn the ignition switch to the RUN position. |
| | 2 Measure the voltage between electrical connector CA88 pin 1 (O) and ground with the accelerator pedal released and with the accelerator pedal at full throttle. |
| | 3 Measure the voltage between electrical connector CA88 pin 4 (B) and ground with the accelerator pedal released and with the accelerator pedal at full throttle. |
| | Does the voltage vary between 0.75 volts and 3.5 volts?<br>**Yes**<br>GO to B4. .<br>**No**<br>GO to B2. . |
| **B2: CARRY OUT AN ACCELERATOR PEDAL POSITION SENSOR COMPONENT CHECK** | |
| | 1 Remove the accelerator pedal. For additional information, refer to Pedal. |
| | 2 Measure the resistance between pin 1 and pin 6 of the accelerator pedal. |

CETHOMANUALS.org

| | |
|---|---|
| | 3 Measure the resistance between pin 4 and pin 5 of the accelerator pedal. |
| | Is the resistance between pin 1 and pin 6 between 546 and 1134 ohms, and between pin 4 and pin 5 between 975 and 2025 ohms?<br>**Yes**<br>GO to B3. .<br>**No**<br>INSTALL a new accelerator pedal. For additional information, refer to Pedal. CLEAR the DTC. TEST the system for normal operation. |
| **B3: CHECK THE ACCELERATOR PEDAL DEMAND SENSOR CIRCUIT FOR A SHORT TO GROUND** | |
| | 1 Disconnect the ECM electrical connector PI 1. |
| | 2 Measure the resistance between electrical connector CA 88 pin 1 (O) and ground. |
| | 3 Measure the resistance between electrical connector CA88 pin 4 (B) and ground. |
| | Is the resistance greater than 10,000 ohms?<br>**Yes**<br>GO to B4. .<br>**No**<br>REPAIR the accelerator pedal demand sensor circuit from the ECM to the accelerator pedal. CLEAR the DTC. TEST the system for normal operation. |
| **B4: CHECK THE ACCELERATOR PEDAL DEMAND SENSOR CIRCUIT FOR OPEN CIRCUIT** | |
| | 1 Disconnect the ECM electrical connector PI 1 and the accelerator pedal electrical connector CA 88. |
| | 2 Measure the resistance between PI 1 pin 103 (O) and CA 88 pin 1 (O). |
| | 3 Measure the resistance between PI 1 pin 102 (B) and CA 88 pin 4 (B). |
| | Is the resistance less than 5 ohms?<br>**Yes**<br>DIAGNOSE the electronic engine control system. For additional information, refer to Section 303-14A Electronic Engine ControlsSection 303-14B Electronic Engine ControlsSection 303-14C Electronic Engine Controls.<br>**No**<br>REPAIR the accelerator pedal demand sensor circuit from the ECM to the accelerator pedal. CLEAR the DTC. TEST the system for normal operation. |

| **PINPOINT TEST C : DTC P0121, P0122, P0123** | |
|---|---|
| **TEST CONDITIONS** | **DETAILS/RESULTS/ACTIONS** |
| **C1: CHECK THE POWER SUPPLY TO THE THROTTLE POSITION SENSOR** | |
| | 1 Turn the ignition switch the to the RUN position. |
| | 2 Measure the voltage between the throttle position sensor electrical connector PI 26 pin 4 (OY) and ground. |
| | Is the voltage less than 4.5 volts?<br>**Yes**<br>GO to C2. .<br>**No**<br>GO to C4. . |
| **C2: CHECK THE THROTTLE POSITION SENSOR POWER SUPPLY CIRCUIT FOR OPEN CIRCUIT** | |
| | 1 Turn the ignition switch to the OFF position. |
| | 2 Disconnect the ECM electrical connector PI 1 and the throttle position sensor electrical connector PI 26. |
| | 3 Measure the resistance between PI 1 pin 12 (OY) and PI 26 pin 4 (OY). |
| | Is the resistance less than 5 ohms?<br>**Yes**<br>GO to C3. .<br>**No**<br>REPAIR the throttle position sensor power supply circuit from the ECM to the throttle position sensor. CLEAR the DTC. TEST the system for normal operation. |
| **C3: CHECK THE THROTTLE POSITION SENSOR POWER SUPPLY CIRCUIT FOR A SHORT TO GROUND** | |
| | 1 Measure the resistance between PI 26-pin 4 (OY) and ground. |
| | Is the resistance greater than 10,000 ohms?<br>**Yes**<br>DIAGNOSE the electronic engine control system. For additional information, refer to Section 303-14A Electronic Engine ControlsSection 303-14B Electronic Engine ControlsSection 303-14C Electronic Engine Controls.<br>**No**<br>REPAIR the throttle position sensor power supply circuit from the ECM to the throttle position sensor. CLEAR the DTC. TEST the system for normal operation. |
| **C4: CHECK THE THROTTLE POSITION SENSOR GROUND CIRCUIT** | |
| | 1 Turn the ignition switch to the OFF position. |
| | 2 Disconnect the throttle position sensor electrical connector PI 26. |
| | 3 Measure the resistance between PI 26 pin 1 (BG) and ground. |
| | Is the resistance less than 5 ohms?<br>**Yes**<br>GO to C6. .<br>**No**<br>GO to C5. . |
| **C5: CHECK THE THROTTLE POSITION SENSOR GROUND WIRE FOR OPEN CIRCUIT** | |
| | 1 Disconnect the ECM electrical connector PI I and the throttle position sensor electrical connector PI 26. |
| | 2 Measure the resistance between PI 26 pin 1 (BG) and PI 1 pin 19 (BG). |
| | Is the resistance less than 5 ohms?<br>**Yes**<br>GO to C6. .<br>**No**<br>REPAIR the throttle position sensor ground circuit from the ECM to the throttle position sensor. CLEAR the DTC. TEST the system for normal operation. |
| **C6: CHECK THE THROTTLE POSITION SENSOR** | |
| | 1 Measure the resistance between PI 26 pin 2 and PI 26 pin 4. |
| | 2 Measure the resistance between PI 26 pin 3 and PI 26 pin 4. |
| | Are the resistor values the same?<br>**Yes**<br>GO to C7. .<br>**No**<br>INSTALL a new throttle body. For additional information refer to Section 303-14A Electronic Engine ControlsSection |

GETtheMANUALS.org

| | |
|---|---|
| | 303-14B Electronic Engine ControlsSection 303-14C Electronic Engine Controls. |
| **C7: CHECK CONTINUITY OF THE THROTTLE POSITION SENSOR OUTPUT CIRCUIT** | |
| | 1 Measure the resistance between PI 1 pin 75 (R) and PI 26 pin 3 (R). |
| | 2 Measure the resistance between PI 1 pin 76 (Y) and PI 26 pin 2 (Y). |
| | Is the resistance less than 5 ohms?<br>**Yes**<br>GO to C8. .<br>**No**<br>REPAIR the circuit from the ECM to the throttle position sensor. CLEAR the DTC. TEST the system for normal operation. |
| **C8: CHECK THE THROTTLE POSITION SENSOR OUTPUT CIRCUIT FOR A SHORT TO GROUND** | |
| | 1 Measure the resistance between PI 26 pin 3 (R) and ground. |
| | 2 Measure the resistance between PI 26 pin 2 (Y) and ground. |
| | Is the resistance greater than 10,000 ohms?<br>**Yes**<br>DIAGNOSE the electronic engine control system. For additional information, refer to Section 303-14A Electronic Engine ControlsSection 303-14B Electronic Engine ControlsSection 303-14C Electronic Engine Controls.<br>**No**<br>REPAIR the circuit from the ECM to the throttle position sensor. CLEAR the DTC. TEST the system for normal operation. |

| **PINPOINT TEST D : DTC P1251, P1658, P1631, P1657** | |
|---|---|
| **TEST CONDITIONS** | **DETAILS/RESULTS/ACTIONS** |
| **D1: CHECK THE THROTTLE MOTOR RELAY** | |
| | 1 Turn the ignition switch to the RUN position. |
| | Does the throttle relay make an audible click?<br>**Yes**<br>GO to D2. .<br>**No**<br>GO to D7. . |
| **D2: CHECK THE ECM POWER SUPPLY FROM THE THROTTLE MOTOR RELAY** | |
| | 1 Measure the voltage between the throttle motor relay connector FH 32D pin 5 (NR) and ground. |
| | Is the voltage greater than 10 volts?<br>**Yes**<br>GO to D3. .<br>**No**<br>GO to D4. . |
| **D3: CHECK CONTINUITY OF THE ECM POWER SUPPLY WIRE FROM THE THROTTLE MOTOR RELAY** | |
| | 1 Turn the ignition switch to the OFF position. |
| | 2 Disconnect the ECM electrical connector PI 1 and remove the throttle motor relay. |
| | 3 Measure the resistance between the throttle motor relay electrical connector FH 32D pin 5 (NR) and the ECM electrical connector PI 1 pin 134 (GU). |
| | Is the resistance less than 5 ohms?<br>**Yes**<br>DIAGNOSE the electronic engine control system. For additional information, refer to Section 303-14A Electronic Engine ControlsSection 303-14B Electronic Engine ControlsSection 303-14C Electronic Engine Controls.<br>**No**<br>REPAIR the ECM power supply wire from the throttle motor relay. CLEAR the DTC. TEST the system for normal operation. |
| **D4: CHECK FUSE 18 IN THE FRONT POWER DISTRIBUTION BOX (FPDB).** | |
| | 1 Check the fuse. |
| | Is the fuse OK?<br>**Yes**<br>GO to D5. .<br>**No**<br>GO to D6. . |
| **D5: CHECK THE THROTTLE MOTOR RELAY POWER SUPPLY CIRCUIT** | |
| | 1 Remove the throttle motor relay. |
| | 2 Measure the voltage between the throttle motor relay connector FH 32D pin 3 (YR) and ground. |
| | Is the voltage less than 10 volts?<br>**Yes**<br>REPAIR the throttle motor relay power supply circuit. CLEAR the DTC. TEST the system for normal operation.<br>**No**<br>INSTALL a new throttle motor relay. CLEAR the DTC. TEST the system for normal operation. |
| **D6: CHECK FUSE 18 FOR A SHORT TO GROUND** | |
| | 1 Measure the resistance between fuse 18 and ground. |
| | Is the resistance greater than 10,000 ohms?<br>**Yes**<br>INSTALL a new fuse. CLEAR the DTC. TEST the system for normal operation.<br>**No**<br>REPAIR short to ground between engine compartment fuse box and the throttle motor relay. INSTALL a new fuse. CLEAR the DTC. TEST the system for normal operation. |
| **D7: CHECK THE POWER SUPPLY CIRCUIT TO THE THROTTLE MOTOR RELAY COIL** | |
| | 1 Turn the ignition switch to the RUN position. |
| | 2 Measure the voltage between the throttle motor relay connector FH 32D pin 1 (GR) and ground. |
| | Is the voltage greater than 10 volts?<br>**Yes**<br>GO to D8. .<br>**No**<br>REPAIR the throttle motor relay coil power supply circuit from the engine compartment fuse box. CLEAR the DTC. TEST the system for normal operation. |
| **D8: CHECK CONTINUITY OF THE THROTTLE MOTOR RELAY COIL** | |
| | 1 Remove the throttle motor relay (if not already removed). |
| | 2 Measure the resistance between terminal 1 and terminal 2 of the throttle motor relay. |

GETtheMANUALS.org

| | |
|---|---|
| | Is the resistance between 70 and 90 ohms?<br>**Yes**<br>GO to D9. .<br>**No**<br>INSTALL a new throttle motor relay. CLEAR the DTC. TEST the system for normal operation. |
| **D9: CHECK CONTINUITY OF THE THROTTLE MOTOR RELAY GROUND CIRCUIT** | |
| | 1 Disconnect the ECM electrical connector PI 1. |
| | 2 Measure the resistance between the throttle motor relay electrical connector FH 32D pin 2 (GR) and the ECM electrical connector PI 1 pin 52 (GR). |
| | Is the resistance less than 5 ohms?<br>**Yes**<br>DIAGNOSE the electronic engine control system. For additional information, refer to Section 303-14A Electronic Engine ControlsSection 303-14B Electronic Engine ControlsSection 303-14C Electronic Engine Controls.<br>**No**<br>REPAIR the throttle motor relay ground circuit from the ECM to the engine compartment fuse box. CLEAR the DTC. TEST the system for normal operation. |

| **PINPOINT TEST E : DTC P1243** | |
|---|---|
| **TEST CONDITIONS** | **DETAILS/RESULTS/ACTIONS** |
| **E1: CHECK THE ACCELERATOR PEDAL DEMAND SENSOR GROUND CIRCUIT** | |
| | 1 Disconnect the ECM electrical connector PI 1 and the accelerator pedal electrical connector CA 88. |
| | 2 Measure the resistance between PI 1 pin 19 (BG) and CA 88 pin 6 (BG). |
| | 3 Measure the resistance between PI 1 pin 20 (BG) and CA 88 pin 3 (BG). |
| | Is the resistance less than 5 ohms?<br>**Yes**<br>DIAGNOSE the electronic engine control system. For additional information, refer to Section 303-14A Electronic Engine ControlsSection 303-14B Electronic Engine ControlsSection 303-14C Electronic Engine Controls.<br>**No**<br>REPAIR the accelerator pedal demand sensor ground circuit from the accelerator pedal to the ECM. CLEAR the DTC. TEST the system for normal operation. |

GETtheMANUALS.org

# Acceleration Control - Accelerator Pedal

Removal and Installation

## Removal

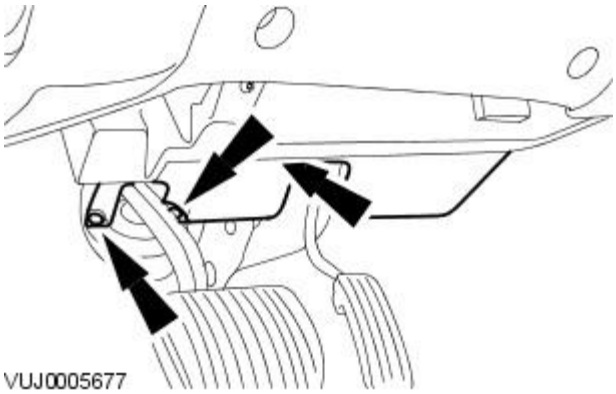


**1.** Remove the driver side instrument panel lower panel.

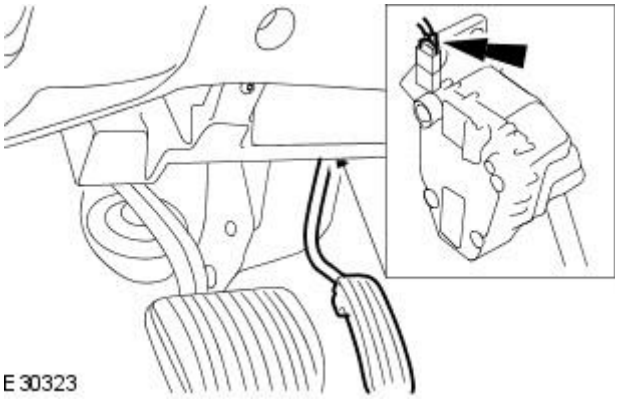


**2.** Disconnect the accelerator pedal electrical connector.

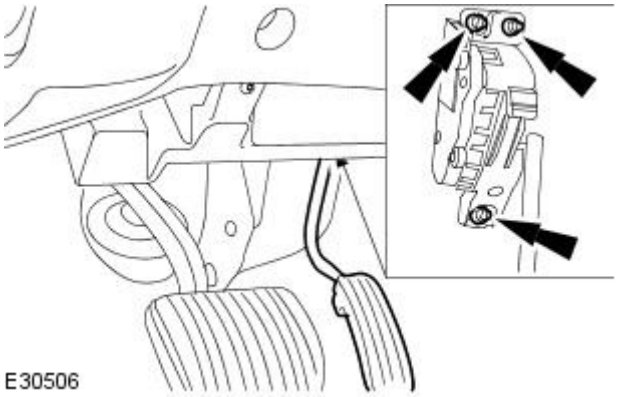


**3.** Remove the accelerator pedal.

- Remove the accelerator pedal retaining screws.
- Remove the accelerator pedal.

## Installation

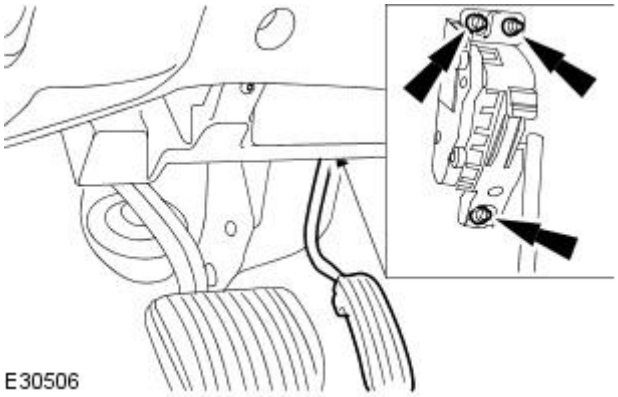


**1.** To install, reverse the removal procedure.

- Tighten to 10 Nm.

GETtheMANUALS.org

# Acceleration Control - Accelerator PedalVehicles With: Adjustable Pedals

Removal and Installation

## Removal

All vehicles

**1.** Adjust the accelerator pedal to it's lowest position.

Right-hand drive vehicles

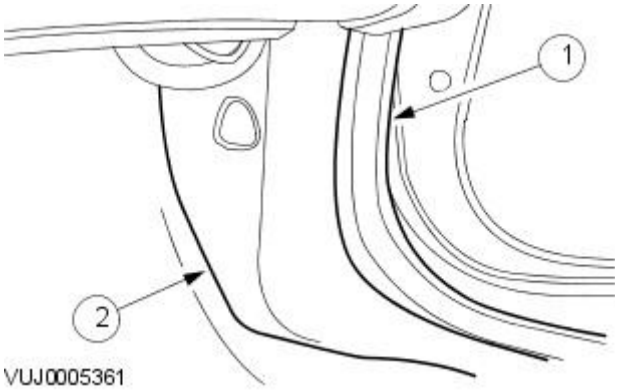


**2.** Remove the driver side cowl side trim panel.

1. Detach the front door aperture seal.
2. Remove the driver side cowl side trim panel.

All vehicles

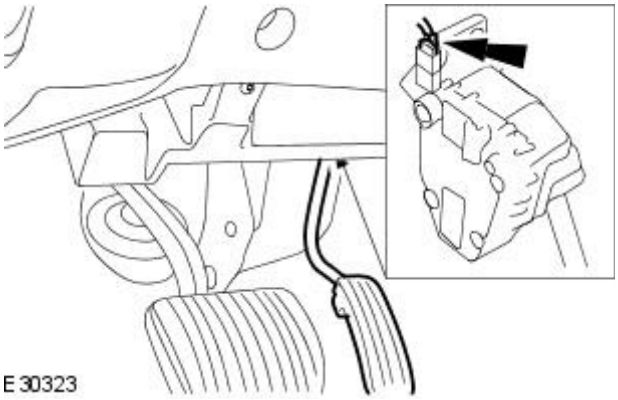


**3.** Disconnect the accelerator pedal electrical connector.

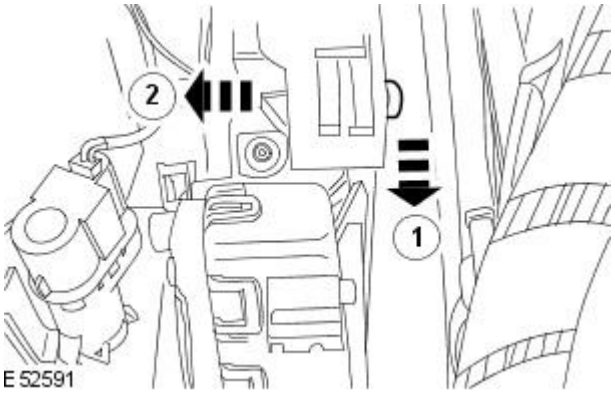


**4.** Remove the accelerator pedal bracket retaining pin.

1. Remove the retaining clip.
2. Remove the accelerator pedal bracket retaining pin.

GETtheMANUALS.org

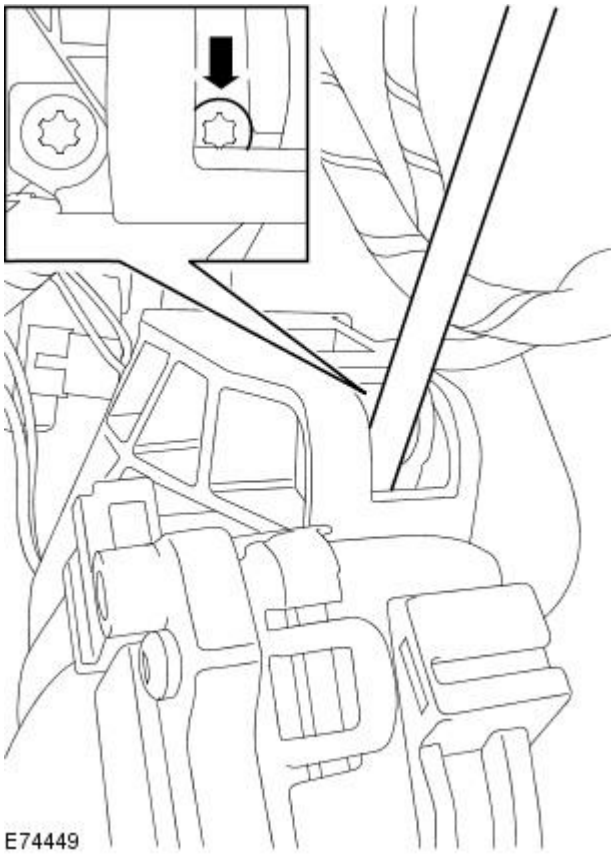


5. Using a suitable T30 Torx key, remove the accelerator pedal retaining screw.

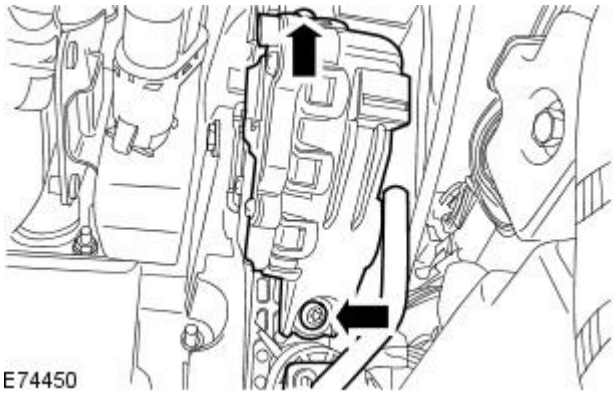


6. Remove the accelerator pedal.

## Installation

All vehicles

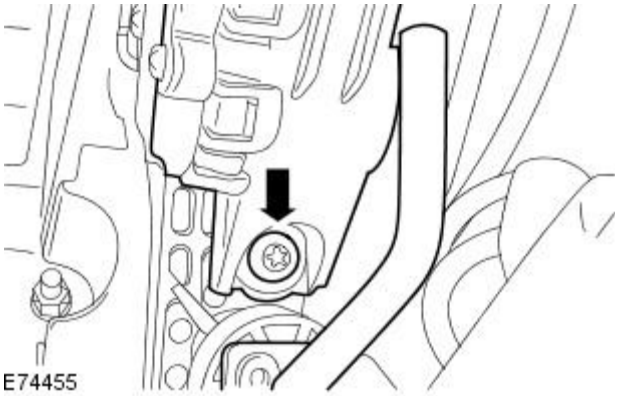


1. Install the accelerator pedal.
   - Loosely install the accelerator pedal retaining screw.

GETtheMANUALS.org

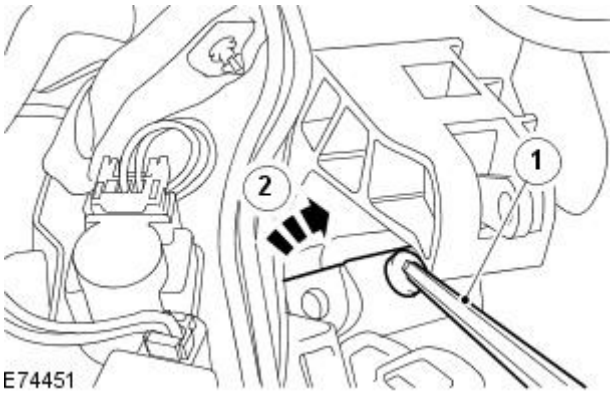


**2.** Reposition and align the accelerator pedal.

**2.** CAUTION: Do not fully tighten the retaining screw using the 4 mm ball ended hexagonal key. Failure to follow this instruction may result in damage to the vehicle.

• NOTE: The 4 mm ball ended hexagonal key is for alignment of the retaining screw only.

1. Using a suitable 4 mm ball ended hexagonal key, install the accelerator retaining screw into the accelerator pedal housing.
2. Reposition and align the accelerator pedal.

**3.** CAUTION: Do not fully tighten the retaining screw using the 4 mm ball ended hexagonal key. Failure to follow this instruction may result in damage to the vehicle.

• NOTE: The 4 mm ball ended hexagonal key is for alignment of the retaining screw only.

Using a suitable 4 mm ball ended hexagonal key, fit but do not fully tighten the accelerator pedal retaining screw.

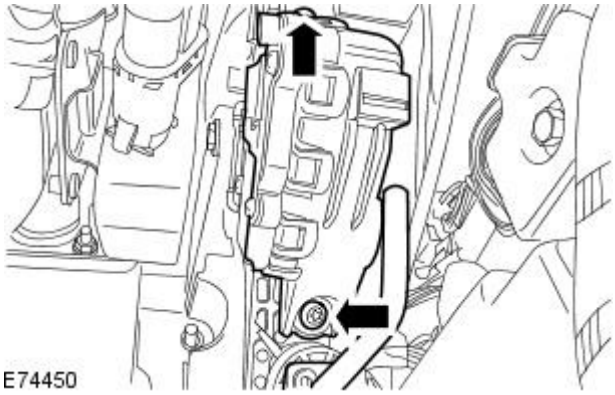


**4.** Tighten the accelerator pedal retaining screws.

- Tighten to 10 Nm.

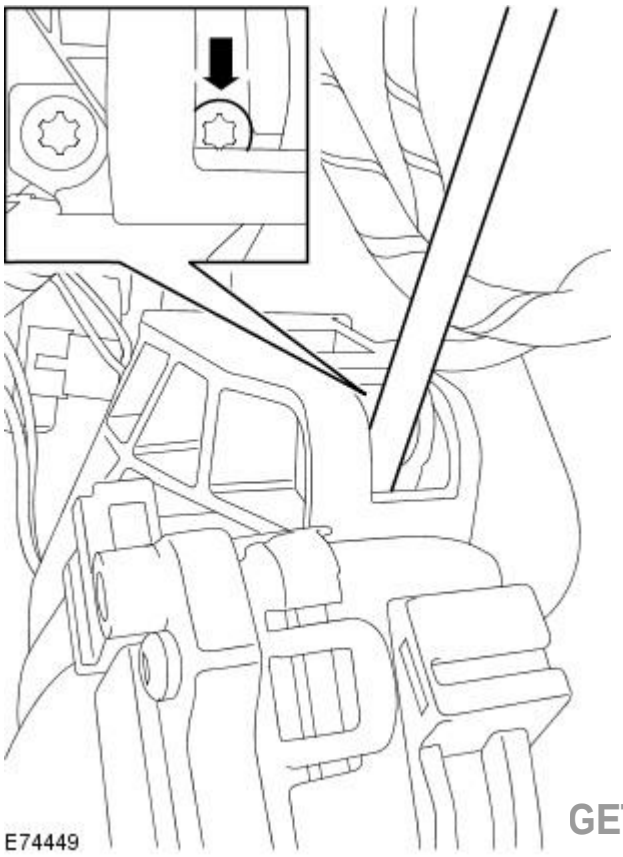


**5.** Using a suitable T30 Torx key, tighten the accelerator pedal retaining screw.

- Tighten to 10 Nm.

GETtheMANUALS.org

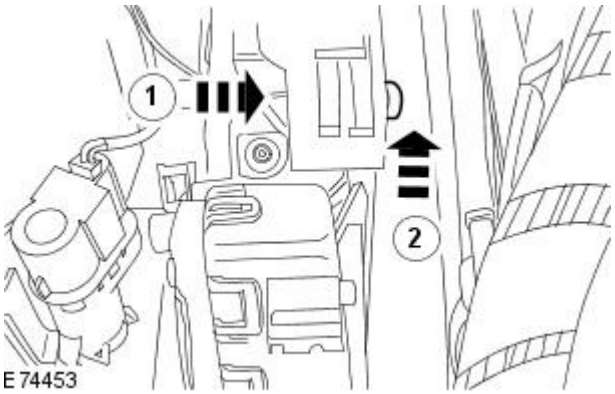


**6.** Install the accelerator pedal bracket retaining pin.

1. Slide the accelerator pedal bracket retaining pin into the bracket.
2. Install the accelerator pedal bracket retaining pin.

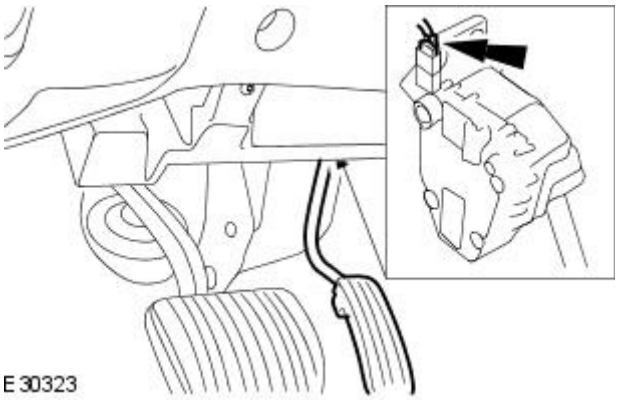


**7.** Connect the accelerator pedal electrical connector.

Right-hand drive vehicles

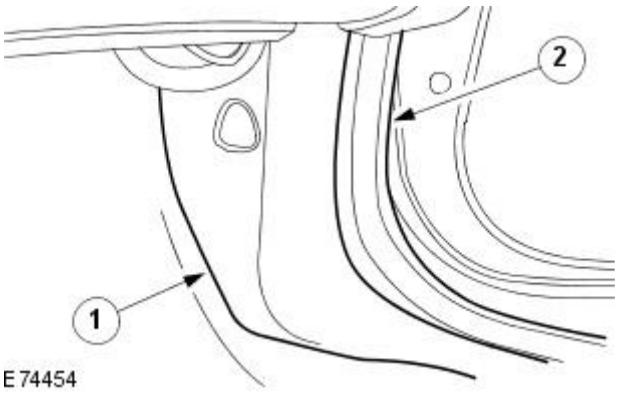


**8.** Attach the front door aperture seal.

1. Install the passenger side cowl side trim panel.
2. Attach the front door aperture seal.

GETtheMANUALS.org

# Speed Control -

**General Specifications**

| Item | Specification |
|---|---|
| Speed control module vertical alignment | 90° ± 0.75° |

**Torque Specifications**

| Description | Nm | lb-ft | lb-in |
|---|---|---|---|
| Speed control module retaining nuts | 5 | - | 44 |
| Speed control module alignment bolt lock nut | 5 | - | 44 |

GETtheMANUALS.org

# Speed Control - Speed ControlVIN Range: M45255->N52047

Description and Operation

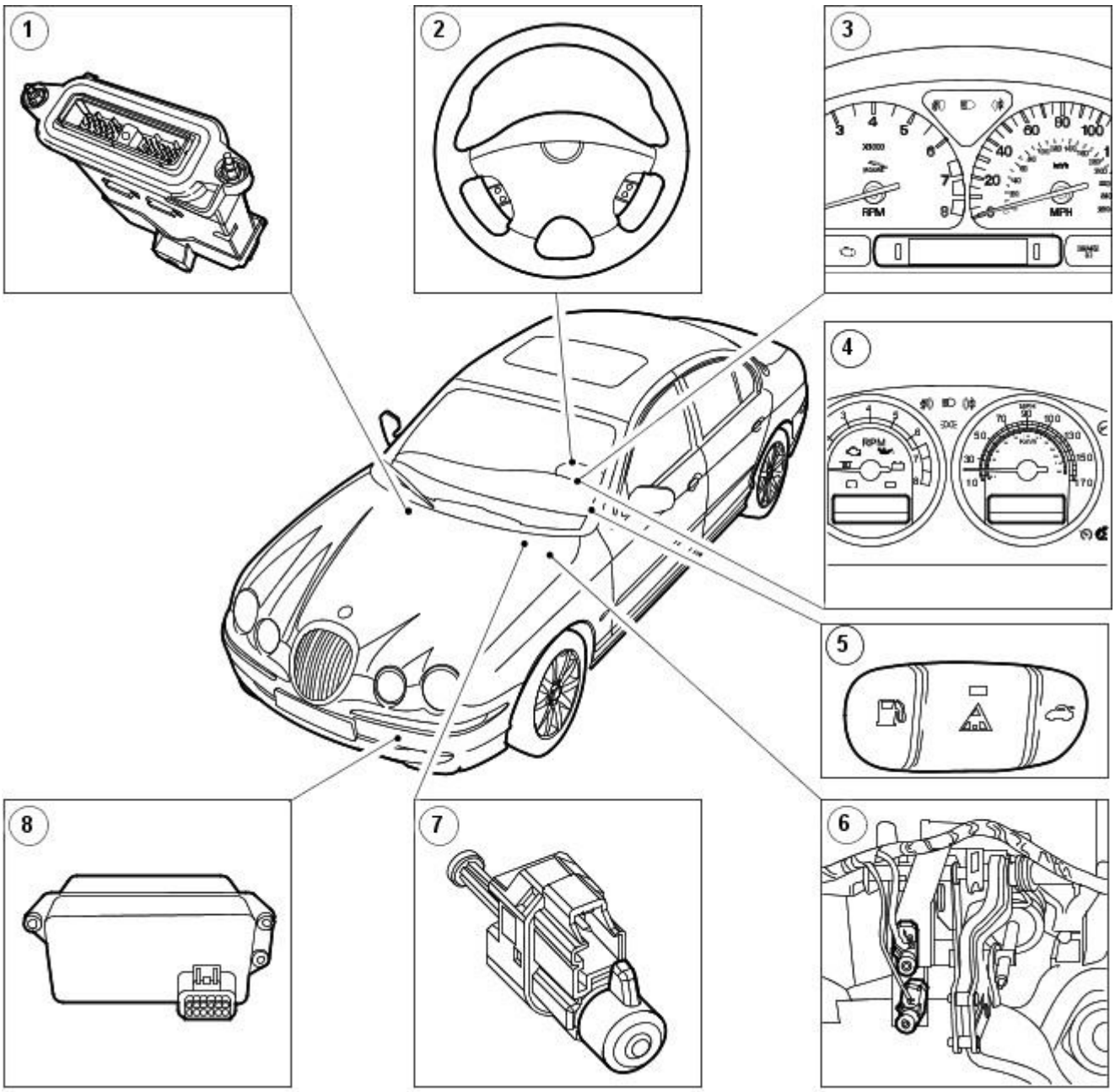


E49864

| Item | Part Number | Description |
|---|---|---|
| 1 | — | Engine control module (ECM) |
| 2 | — | Speed control actuator switches |
| 3 | — | Message center (vehicles built up to 01/2004) |
| 4 | - | Message center (vehicles built 02/2004 onwards) |
| 5 | — | Forward alert switch - vehicles with adaptive speed control |
| 6 | — | Brake pedal position switch and speed control deactivate switch |
| 7 | — | Clutch pedal position sensor |
| 8 | — | Adaptive speed control module - vehicles with adaptive speed control |

## System operation

The speed control system is inoperative below 27 mile/h (43 kph) and inoperative above the following speeds:

- 120 mile/h (193 km) for vehicles fitted with 2.5L/3.0L engine and automatic transmission.
- 125 mile/h (201 km) for all other variants.

The speed control system is designed to maintain a selected vehicle speed between these two parameters.

Any of the switches operated by the brake or clutch pedal (vehicles fitted with manual transmission) will interrupt the speed control operation by switching the signal to the engine control module (ECM). This will allow the system to go into STANDBY mode. Pressing the RESUME switch with the vehicle travelling above 27 mile/h (43 kph) while the system is in STANDBY mode will allow the vehicle to accelerate until the last set speed is resumed.

## Speed control switch - vehicles without adaptive speed control

### RESUME Switch

GETtheMANUALS.org

When the RESUME switch is pressed with the vehicle travelling above 27 mile/h (43 kph) with the system in STANDBY mode, allows the vehicle to accelerate until the last set speed is resumed. The RESUME switch will not function if the ignition switch has been cycled or if the

vehicle speed is below 27 mile/h (43 kph).

**CANCEL Switch**

When the CANCEL switch is pressed with the vehicle travelling above 27 mile/h (43 kph) the system will enter STANDBY mode.

**SET Switch**

When the SET +/- switch is pressed with the vehicle travelling above 27 mile/h (43 kph) the system allows the vehicle speed to be maintained to ± 1 mile/h (1.62 kph). Pressing the SET +/- switch will increase or decrease the vehicle speed respectively until the switch is released. If the respective switch is pressed momentarily, the speed will accelerate or decelerate in 1 mile/h increments.

## Brake Pedal Position (BPP) Switch

If the brake pedal is activated while the speed control system is active, the ECM receives a signal from the brake pedal position switch. This will cancel speed control and allow the throttle blade to return to the position as demanded by the accelerator pedal.

## Speed control deactivation switch (brake).

If the brake pedal is activated while the speed control system is active, the ECM receives a signal from the speed control deactivator switch. This will cancel speed control and allow the throttle blade to return to the position as demanded by the accelerator pedal.

## Speed control deactivation switch (clutch)

If the clutch pedal is activated while the speed control system is active, the ECM receives a signal from the clutch pedal position switch. This will cancel speed control and allow the throttle blade to return to the position as demanded by the accelerator pedal.

## Adaptive speed control

On vehicles for certain markets, an adaptive speed control system is installed as an option. In addition to the normal vehicle speed control functions, this system enables a preset distance to be maintained behind a moving vehicle immediately ahead, without driver intervention.

Automatic Switch Off - Vehicles with Adaptive Speed Control

The adaptive speed control will disengage, but not clear the memory when:

- the CANCEL button is activated.
- the brake pedal is applied.
- the vehicle speed falls below 26Km/h (16mph).
- neutral, park or reverse gear positions are selected.
- traction control is activated.

The adaptive speed control will disengage, and clear the memory when:

- the ignition switch is set to position '0'.
- maximum vehicle speed is reached.
- the parkbrake is applied.
- a fault occurs in the adaptive speed control system.

Forward Alert Switch - Vehicles with Adaptive Speed Control

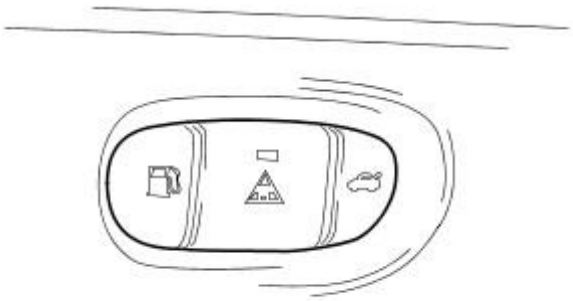

E45966

Forward Alert

The forward alert system is switched on and off by the forward alert switch. The forward alert system additionally provides warnings while the adaptive speed control is not activated.

Speed Control Module

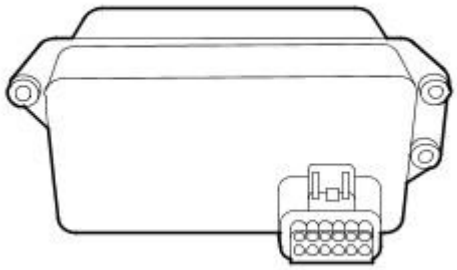

GETtheMANUALS.org

E44823

The adaptive speed control module incorporates a radar sensor and yaw rate sensor to provide system control functions.

Adaptive Speed Control Failure

If a fault occurs during any adaptive speed control operation the adaptive speed control system will be deactivated and will remain in this state until the fault is rectified. The message center will display 'CRUISE NOT AVAILABLE'.

GETtheMANUALS.org

# Speed Control - Speed ControlVIN Range: N52048->N99999

Description and Operation

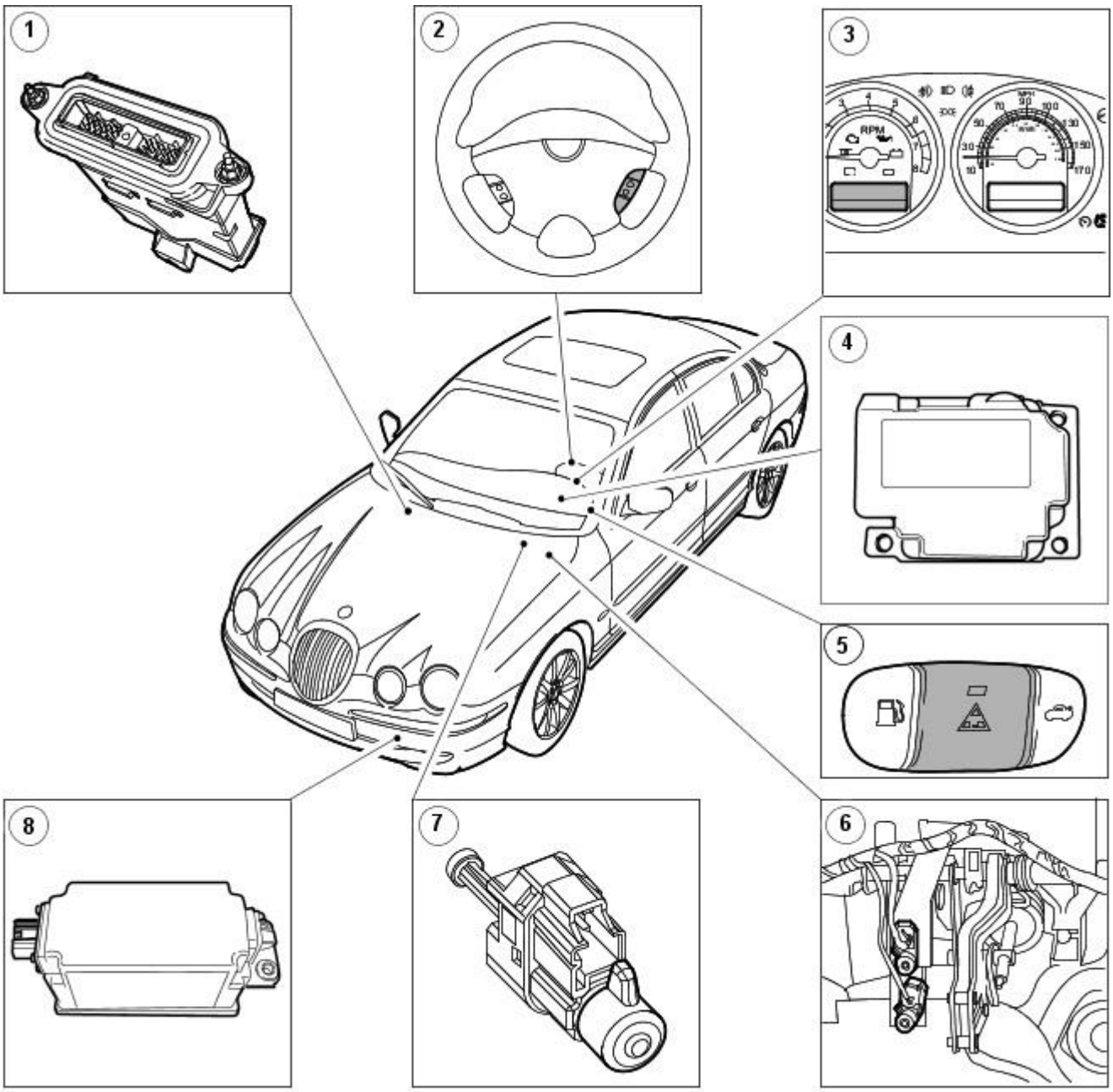


E64560

| Item | Part Number | Description |
|---|---|---|
| 1 | — | Engine control module (ECM) |
| 2 | — | Speed control steering wheel switches |
| 3 | — | Message center |
| 4 | — | Speed control module - vehicles with adaptive speed control |
| 5 | — | Forward alert switch - vehicles with adaptive speed control |
| 6 | — | Brake pedal position switch and speed control deactivate switch |
| 7 | — | Clutch pedal position sensor |
| 8 | - | Speed control sensor - vehicles with adaptive speed control |

## System operation

The speed control system is inoperative below 32 kph (20 mile/h) and inoperative above 250 kph (155 mile/h).

The speed control system is designed to maintain a selected vehicle speed between 32 kph (20 mile/h) and 180 kph (112 mile/h).

Any of the switches operated by the brake will interrupt the speed control operation by switching the signal to the engine control module (ECM). This will allow the system to go into STANDBY mode. Pressing the RESUME switch with the vehicle travelling above 32 kph (20 mile/h) while the system is in STANDBY mode will allow the vehicle to accelerate until the last set speed is resumed.

## Speed Control Steering Wheel Switches

GETtheMANUALS.org

E63500

**RESUME Switch**

When the RESUME switch is operated with the vehicle travelling above 32 kph (20 mile/h) with the system in STANDBY mode, the vehicle is allowed to accelerate until the last set speed is resumed. The RESUME switch will not function if the ignition switch has been cycled or if the vehicle speed is below 32 kph (20 mile/h).

**CANCEL Switch**

When the CANCEL switch is operated with the vehicle travelling above 32 kph (20 mile/h) the system will enter STANDBY mode.

**SET Switch**

When the SET +/- switch is operated with the vehicle travelling above 32 kph (20 mile/h) the system allows the vehicle speed to be maintained to ± 1.62 kph (1 mile/h). Pressing the SET +/- switch will increase or decrease the vehicle speed respectively until the switch is released. If the respective switch is pressed momentarily, the speed will accelerate or decelerate in 1.62 kph (1 mile/h) increments.

## Brake Pedal Position (BPP) Switch

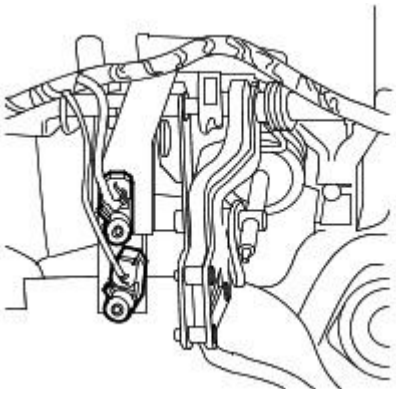
E63502

If the brake pedal is operated while the speed control system is active, the ECM receives a signal from the BPP switch. This will cancel vehicle speed control and allow the throttle blade to return to the position as demanded by the accelerator pedal.

## Speed Control Deactivation Switch (brake).

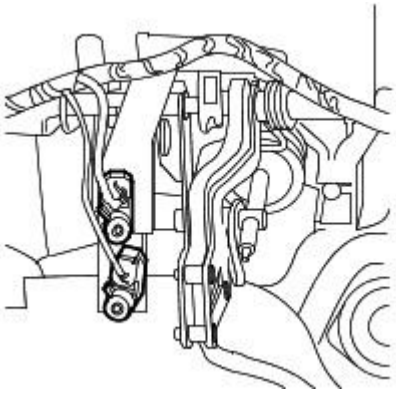
E63502

If the brake pedal is activated while the speed control system is active, the ECM receives a signal from the speed control deactivation switch. This will cancel speed control and allow the throttle blade to return to the position as demanded by the accelerator pedal.

## Clutch Pedal Position Sensor

GETtheMANUALS.org

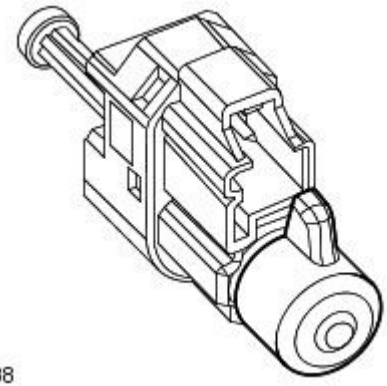

E63838

If the clutch pedal is activated while the speed control system is active, the ECM receives a signal from the clutch pedal position switch. This will cancel speed control and allow the throttle blade to return to the position as demanded by the accelerator pedal.

## Adaptive Speed Control

On vehicles for certain markets, an adaptive speed control system is installed as an option. In addition to the normal vehicle speed control functions, this system enables a preset distance to be maintained behind a moving vehicle immediately ahead, without driver intervention.

Automatic Switch Off - Vehicles with Adaptive Speed Control

The adaptive speed control will disengage, but not clear the memory when:

- the CANCEL button is operated.
- the brake pedal is applied.
- the vehicle speed falls below 32 kph (20 mile/h).
- neutral, park or reverse gear positions are selected.
- traction control is activated.
- cruise override activated for more than five minutes.

The adaptive speed control will disengage, and clear the memory when:

- the ignition switch is set to position '0'.
- a fault occurs in the adaptive speed control system.

Message center

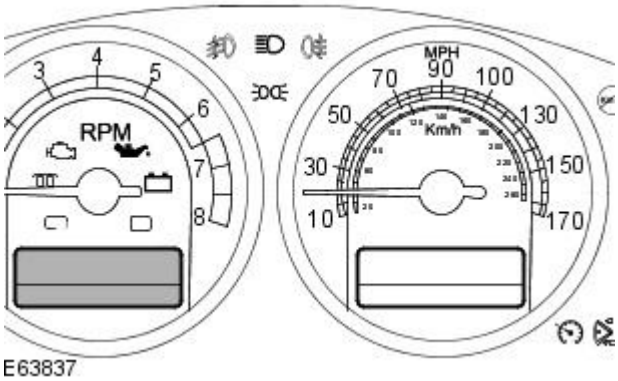


E63837

The message center will keep the driver informed by displaying messages and warnings.

Forward Alert Switch - Vehicles with Adaptive Speed Control

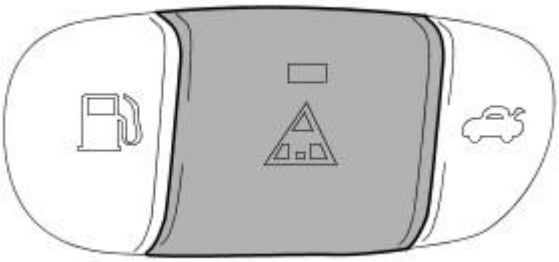

E63839

Forward Alert

The forward alert system is switched on and off by the forward alert switch, which is incorporated into the message center switch. The forward alert system additionally provides warnings while the adaptive speed control is not activated.

Speed Control Module - Vehicles with Adaptive Speed Control

GETtheMANUALS.org

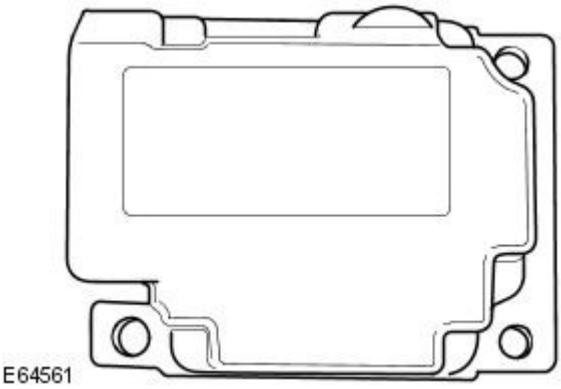

E64561

The speed control module provides system control functions.

Speed Control Sensor - Vehicles with Adaptive Speed Control

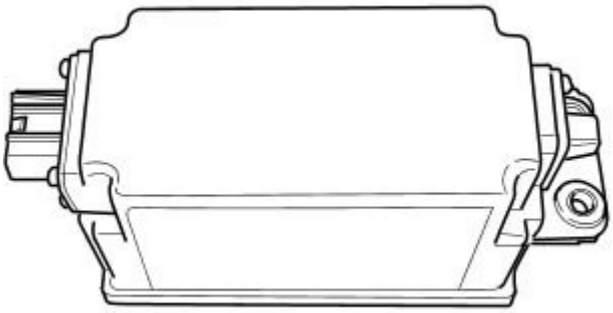

E63818

The speed control sensor incorporates the forward looking radar sensor.

Adaptive Speed Control Failure

If a fault occurs during any adaptive speed control operation, the adaptive speed control system will deactivate and will remain in this state until the fault is rectified. The 'CRUISE NOT AVAILABLE' message will be displayed on the message center on 'demand' by trying to operate the steering wheel control switches. This on 'demand' strategy is intended to show that adaptive speed control is not available and another fault may exist. For example: If an anti-lock brake system or traction control error message is displayed this would imply that the brake system may be effecting or inhibiting the adaptive speed control. If the message center displays 'CRUISE NOT AVAILABLE' permanently or no message is displayed, this may imply that the vehicle has an ECM fault.

GETtheMANUALS.org

# Speed Control - Speed ControlVIN Range: M45255->N13088

Diagnosis and Testing

## Principles of Operation

There are two types of speed (cruise) control fitted, adaptive cruise control (ACC) and non-adaptive cruise control.

The non-adaptive system maintains a road speed selected by the driver from the steering wheel switches, and is cancelled by inputs from the steering wheel **CANCEL** switch, the brake pedal (the system will disengage if the brake pedal is pressed), road speed (the system will disengage if the road speed falls below 26 kph [16 mph]), gear selector position (the system will disengage if **NEUTRAL, PARK** or **REVERSE** gears are selected), traction or stability control (the system will disengage if the traction or stability control is activated).

The adaptive system also maintains a road speed selected by the driver from the steering wheel switches, and is cancelled by the same inputs (the only difference being that the selected speed will show in the message center display), but can also maintain a selected distance from the vehicle in front.

When the system is enabled, the vehicle will maintain the selected speed until another vehicle is detected travelling in the same lane and direction, when it will enter **FOLLOW MODE.**

In this mode, the vehicle will maintain a time gap from the vehicle in front, rather than the selected speed. **This is not a fault**, but a designed feature of the system. The time gap is adjustable, using the **HEADWAY** switches on the steering wheel switchpack, but will default to a longer gap, unless overridden by the driver.

When the vehicle enters **FOLLOW MODE**, the message center will display the **ACC** tell-tale symbol (see the owner's handbook), with a **GAP** indication for four seconds, and the vehicle will maintain the gap from the vehicle in front until;

- The vehicle in front accelerates to a speed above the selected speed, in which case the selected speed will be resumed
- The vehicle in front moves out of lane, or out of view, in which case the selected speed will be resumed
- The vehicle in front slows to below 26 km/h (16 mph), at which speed the system disengages, the message **DRIVER INTERVENE** will display on the message center, and any braking applied by the ACC system will reduce. **This is not a fault** but may involve the driver having to take control and brake him/herself.
- A new gap distance is set by the driver from the steering wheel switches

The ACC system can apply the brakes to maintain the gap to the vehicle in front. The braking force which the system can apply is limited, but can be overridden by the driver braking. This action will cancel the cruise control function, but the system will "remember" the selected speed, and will resume the selected speed by the driver pressing the **RESUME** switch on the steering wheel switchpack

• NOTE: When the system applies the brakes, the brake lights will function exactly as if the driver were braking.

It is possible (for example, when a slow-moving vehicle pulls out into the lane in front), for the degree of braking necessary to avoid a collision to exceed the maximum level of the ACC system. Should this happen, an audible warning will sound, accompanied by a **red** warning light and a **DRIVER INTERVENE** display on the message center, at which point, the driver must take action. **This is not a fault**, but a designed feature of the system.

Should the driver need to go faster than the selected speed, he/she can override the system simply by pressing the accelerator, in which case, the message center will display **CRUISE OVERRIDE.** When the pedal is released, the system will resume operation in whichever mode is appropriate, follow or selected speed.

## Detection

As with most sensors, there are certain conditions under which detection issues can occur. The owner/driver's attention should be drawn to the driver's handbook to avoid misunderstandings as to what is, and isn't, a fault.

Detection issues may occur;

- When driving on a different line to the vehicle in front
- When vehicles edge into your lane
- When going into or coming out of a bend
- With detecting motorcycles
- With detecting stationary objects, such as traffic queues, broken down vehicles, etc

In circumstances such as these, the ACC system may brake late or unexpectedly, or may increase speed. **This is not a fault**, but is the system reacting to detection issues.

The owner's handbook makes it clear that the system should only be used under suitable conditions, but technicians should be wary of wasting time on complaints which are not actually faults.

## Inspection and verification

1. **1.** Verify the customer concern.
2. **2.** Confirm which, if any, warning lights and/or messages were displayed on the instrument cluster.

• NOTE: If any warning lights and/or messages were displayed when the fault occurred, refer to the Driver Information table for DTCs associated with the display, then to the DTC index table for possible sources and actions. Some warnings will appear to clear when the ignition is cycled. This is often because the warning has flagged as a result of one of the vehicle's on-board diagnostic routines having run to detect the fault. If the same routine is not run when the ignition is switched **ON**, the warning will not reflag until the routine does run. See the DTC summaries for drive cycle routines.

3. **3.** Visually inspect for obvious signs of mechanical or electrical damage.

**Visual Inspection Chart**

| Mechanical | Electrical |
|---|---|
| • Speed control module levelling<br>• Engine oil level<br>• Cooling system coolant level<br>• Fuel level<br>• Fuel contamination/grade/quality<br>• Throttle body<br>• Poly-vee belt | • Fuses<br>• Wiring harness<br>• Electrical connector(s)<br>• Controller Area Network circuits<br>• Sensor(s)<br>• Engine control module (ECM)<br>• Transmission control module |

GETtheMANUALS.com

4. **4.** Verify the following systems are working correctly:

- Air intake system
- Cooling system
- Charging system
- Fuel charging system
- Ignition system

5. **5.** If an obvious cause for an observed or reported concern is found, correct the cause (if possible) before proceeding to the next step

• NOTE: If a DTC cannot be cleared, then there is a permanent fault present that flags again as soon as it is cleared. (The exception to this is P1260, which will only clear following an ignition **OFF/ON** cycle after rectification.)

6. **6.** If the cause is not visually evident and the Jaguar approved diagnostic system is not available, use a scan tool to retrieve the fault codes before proceeding to the diagnostic trouble code (DTC) index chart, or the symptom chart if no DTCs are set.

## Speed Control Module Levelling

An incorrectly aligned speed control module can cause incorrect system operation. Before starting any repair work on the ACC system, check the levelling of the speed control module. For further information,
REFER to: Speed Control Module Alignment (310-03 Speed Control, General Procedures).

## Symptom Chart

**Symptom Chart**
• NOTE: Check and rectify basic faults before beginning diagnostic routines involving pinpoint tests.

| Symptom | Possible source | Action |
|---|---|---|
| Speed control inhibited or disabled | • Default mode enabled<br>• Speed control switch(es)<br>• Throttle sensors<br>• Stop lamp switch | • Check message center for default message.<br>• For speed control switch circuit tests, GO to Pinpoint Test B.<br>• For speed control switch input signal tests, GO to Pinpoint Test C.<br>• For headway switch tests, GO to Pinpoint Test E.<br>• For 2.5 and 3.0 L engine throttle position sensor tests, REFER to: Electronic Engine Controls - VIN Range: M45255->N52047 (303-14A Electronic Engine Controls - 2.5L NA V6 - AJV6/3.0L NA V6 - AJ27, Diagnosis and Testing).<br>• For 4.2 L engine throttle position sensor tests, REFER to: Electronic Engine Controls - VIN Range: M45255->N52047 (303-14B Electronic Engine Controls - V8 4.2L Petrol/V8 S/C 4.2L Petrol, Diagnosis and Testing).<br>• Check electrical guides for stop light switch information. |
| Unable to regulate/adjust vehicle speed | • Steering wheel switch malfunction | • For speed control switch circuit tests, GO to Pinpoint Test B.<br>• For speed control switch input signal tests, GO to Pinpoint Test C. |
| Unable to cancel speed control from steering wheel | • Steering wheel switch malfunction | • For speed control switch circuit tests, GO to Pinpoint Test B.<br>• For speed control switch input signal tests, GO to Pinpoint Test C. |
| Unable to cancel speed control from brake pedal | • Brake cancel switch malfunction | • For brake cancel switch tests, GO to Pinpoint Test D. |

## Driver Information Chart

• NOTE: Use this table to identify DTCs associated with the message centre display, then refer to the DTC index for possible sources and actions.

• NOTE: For definitions of Default Modes, see the foot of this table.

| Warning light | Message | Default Mode | DTC |
|---|---|---|---|
| Red | ENGINE SYSTEMS FAULT | Engine shut-down (all cylinders fuel cut) | P1224 |
| Red | ENGINE SYSTEMS FAULT | Limp-Home | P1229 |
| Red | ENGINE SYSTEMS FAULT | Limp-Home | P0121, P0122, P0123, P0222, P0223 |
| Red | ENGINE SYSTEMS FAULT | Limp-Home | P1251, P1631 |
| Red | ENGINE SYSTEMS FAULT | Limp-Home | P1611 |
| Red | ENGINE SYSTEMS FAULT | Limp-Home | P1633 |
| Red | ENGINE SYSTEMS FAULT | High idle | P1344, P1122, P1123, P1215, P1216 |
| Red | RESTRICTED PERFORMANCE | Limp-Home unavailable | P1254 |
| Red | RESTRICTED PERFORMANCE | Limp-Home unavailable | P1250 |
| Red | RESTRICTED PERFORMANCE | Safety redundancy | P1657, P1658 |
| Red | RESTRICTED PERFORMANCE | Safety redundancy | P1634 |
| None | CRUISE OVERRIDE | None | None. See principles of operation in this section |
| Red | DRIVER INTERVENE | None | None. See principles of operation in this section |
| Amber | CRUISE NOT AVAILABLE | None | P1571 |
| Amber | CRUISE NOT AVAILABLE | None | P0568 |
| Amber | CRUISE NOT AVAILABLE | None | P0567 |

GETtheMANUALS.org

| Warning light | Message | Default Mode | DTC |
|---|---|---|---|
| Amber | CRUISE NOT AVAILABLE | None | P0570 |
| Amber | CRUISE NOT AVAILABLE | None | P0569 |
| Amber | CRUISE NOT AVAILABLE | None | P0566 |
| Amber | CRUISE NOT AVAILABLE | None | P1697 |
| Amber | CRUISE NOT AVAILABLE | None | P1696 |
| Amber | RESTRICTED PERFORMANCE | Engine speed limited | P0116, P0117, P0118, P0125 |
| Amber | RESTRICTED PERFORMANCE | Engine speed limited | P0101, P0102, P0103, P0104 |
| Amber | RESTRICTED PERFORMANCE | Engine speed limited | P0300, P0301, p0302, P0303, P0304, P0305, P0306, P0307, P0308, P1313, P1314 |
| Amber | RESTRICTED PERFORMANCE | Engine speed limited | P0327, P0328, P0332, P0333, P1648 |
| Amber | RESTRICTED PERFORMANCE | Engine speed limited | P0351, P0352, P0353, P0354, P0355, P0356, P0357, P0358, P1367, P1368 |
| Amber | RESTRICTED PERFORMANCE | Engine speed limited | P0171, P0172, P0174, P0175 |
| Amber | RESTRICTED PERFORMANCE | Engine speed limited | P0201, P0202, P0203, P0204, P0205, P0206, P0207, P0208 |
| Amber | RESTRICTED PERFORMANCE | Engine speed limited | P0335, P0336 |
| Amber | RESTRICTED PERFORMANCE | Engine speed limited, Reverse throttle progression enabled | P1642 |
| Amber | RESTRICTED PERFORMANCE | Engine speed limited, Reverse throttle progression enabled | P1643 |
| Amber | RESTRICTED PERFORMANCE | Engine speed limited, Reverse throttle progression enabled | P0096, P0097, P0098 |
| Amber | RESTRICTED PERFORMANCE | Engine speed limited, Reverse throttle progression enabled | P1474 |
| Amber | RESTRICTED PERFORMANCE | Engine speed limited | P1234, P1236, P1338 |

## Default mode definitions

**LIMP-HOME MODE**

- Throttle motor off
- Throttle motor relay off
- Throttle motor circuit off
- Fuel intervention
- Speed (cruise) control inhibited

**LIMP-HOME UNAVAILABLE**

- Power limitation
- Vehicle speed limited to 120 kph (75 mph)
- Reverse throttle progression enabled
- Speed (cruise) control Inhibited

**REVERSE THROTTLE PROGRESSION**

- Throttle opening limited to maximum 30%

• NOTE: The throttle operation uses the same map as for reverse gear.

**ENGINE SPEED LIMITED**

- Engine runs normally, up to 3000 rpm
- Engine speed restricted to 3000 rpm maximum, by fuel cut-off

**HIGH IDLE**

- Throttle valve kept in fixed position by motor
- Speed (cruise) control Inhibited

**SAFETY REDUNDANCY**

- Power limitation
- Vehicle speed limited to 120 kph (75 mph)
- Reverse throttle progression enabled
- Speed (cruise) control Inhibited

## Diagnostic trouble code (DTC) index

| DTC | Description | Possible Source | Action |
|---|---|---|---|
| P0566 | Speed control **CANCEL** switch ON fault | • Speed control switches internal steering wheel circuit: short circuit to GROUND<br>• Steering wheel clockspring: short circuit to GROUND<br>• Cassette reel to ECM circuit: short circuit to GROUND<br>• **CANCEL** switch failure (stuck ON) | For speed control switch circuit tests, GO to Pinpoint Test B. |

## Pinpoint Tests

CAUTION: When probing connectors to take measurements in the course of the pinpoint tests, use the adaptor kit, part number 3548-1358-00.

• NOTE: When performing electrical voltage or resistance tests, always use a digital multimeter (DMM) accurate to 3 decimal places, and with an up-to-date calibration certificate. When testing resistance, always take the resistance of the DMM leads into account.

GETmeMANUALS.org

## PINPOINT TEST A : CHECK THE FORWARD ALERT SWITCH

• NOTE: For a quick function check of the switch action, monitor the LED function as the switch is operated.

| TEST CONDITIONS | DETAILS/RESULTS/ACTIONS |
|---|---|
| **A1: CHECK THE FORWARD ALERT SWITCH GROUND** | |
| | 1 Disconnect the forward alert switch electrical connector, FC43. |
| | 2 Measure the resistance between FC43, pin 09 (B) and GROUND. |
| | Is the resistance greater than 5 ohms?<br>**Yes**<br>REPAIR the high resistance circuit. For additional information, refer to the wiring diagrams. TEST the system for normal operation.<br>**No**<br>GO to A2. |
| **A2: CHECK THE FORWARD ALERT SWITCH TO ASCCM CIRCUIT FOR HIGH RESISTANCE** | |
| | 1 Disconnect the battery negative terminal.<br>REFER to: Battery Disconnect and Connect (414-01 Battery, Mounting and Cables, General Procedures). |
| | 2 Disconnect the ASCCM electrical connector, FH107. |
| | 3 Measure the resistance between FC43, pin 07 (GW) and FH107, pin 12 (GW). |
| | Is the resistance greater than 5 ohms?<br>**Yes**<br>REPAIR the high resistance circuit. For additional information, refer to the wiring diagrams. TEST the system for normal operation.<br>**No**<br>GO to A3. |
| **A3: CHECK THE FORWARD ALERT SWITCH TO ASCCM CIRCUIT FOR SHORT CIRCUIT TO GROUND** | |
| | 1 Measure the resistance between FC43, pin 07 (GW) and GROUND. |
| | Is the resistance less than 10,000 ohms?<br>**Yes**<br>REPAIR the short circuit. For additional information, refer to the wiring diagrams. TEST the system for normal operation.<br>**No**<br>GO to A4. |
| **A4: CHECK THE FORWARD ALERT SWITCH GROUND CIRCUIT FOR SHORT TO B+** | |
| | 1 Measure the voltage between FC43, pin 06 (B) and GROUND. |
| | Is the voltage greater than 3 volts?<br>**Yes**<br>REPAIR the short circuit. This circuit includes the splice IPS 35. For additional information, refer to the wiring diagrams. TEST the system for normal operation.<br>**No**<br>INSTALL a new forward alert switch. CLEAR the DTC. TEST the system for normal operation. If the DTC is repeated, contact dealer technical support for advice on possible ECM failure. |

## PINPOINT TEST B : DTC P0566, P0567, P0569, P0570: CHECK THE STEERING WHEEL SWITCH CIRCUIT FOR SHORT TO GROUND

WARNING: TO AVOID ACCIDENTAL DEPLOYMENT AND POSSIBLE PERSONAL INJURY, THE BACKUP POWER SUPPLY MUST BE DEPLETED BEFORE REPAIRING OR REPLACING ANY AIR BAG SUPPLEMENTAL RESTRAINT SYSTEM (SRS) COMPONENTS. TO DEPLETE THE BACKUP POWER SUPPLY ENERGY, DISCONNECT THE BATTERY GROUND CABLE AND WAIT ONE MINUTE. FAILURE TO FOLLOW THIS INSTRUCTION MAY RESULT IN PERSONAL INJURY.

| TEST CONDITIONS | DETAILS/RESULTS/ACTIONS |
|---|---|
| **B1: CHECK THE STEERING WHEEL SPEED CONTROL SWITCH CIRCUIT FOR SHORT TO GROUND** | |
| | 1 Disconnect the battery negative terminal.<br>REFER to: Battery Disconnect and Connect (414-01 Battery, Mounting and Cables, General Procedures). |
| | 2 Wait one minute for the system to become safe. |
| | 3 Disconnect the ECM electrical connector, PI01. |
| | 4 With the switches **NOT** operated, measure the resistance between PI01, pin 47 (WG) and GROUND. |
| | 5 With the switches **NOT** operated, measure the resistance between PI01, pin 48 (YG) and GROUND. |
| | Is the resistance less than 10,000 ohms?<br>**Yes**<br>GO to B2.<br>**No**<br>Contact dealer technical support for advice on possible ECM failure. |
| **B2: CHECK THE STEERING WHEEL SPEED CONTROL SWITCH FOR SHORT TO GROUND** | |
| | 1 Disconnect the steering wheel switch electrical connector, SQ2. |
| | 2 Measure the resistance between SQ02, pin 01 (SR) and GROUND. |
| | 3 Measure the resistance between SQ02, pin 03 (S) and GROUND. |
| | Is either resistance less than 10,000 ohms?<br>**Yes**<br>GO to B3.<br>**No**<br>INSTALL a new speed control switch assembly.<br>REFER to: Speed Control Switch (310-03 Speed Control, Removal and Installation).<br>CLEAR the DTC. TEST the system for normal operation. |
| **B3: CHECK THE STEERING WHEEL CLOCKSPRING FOR SHORT TO GROUND** | |
| | 1 Disconnect the clockspring electrical connector, SW08. |
| | 2 Measure the resistance between FC117, pin 06 (YG) and GROUND. |
| | 3 Measure the resistance between FC117, pin 08 (WG) and GROUND. |
| | Is either resistance less than 10,000 ohms?<br>**Yes**<br>REPAIR the short circuit. For additional information, refer to the wiring diagrams. TEST the system for normal operation.<br>**No**<br>INSTALL a new clockspring.<br>REFER to: Clockspring (501-20B Supplemental Restraint System, Removal and Installation).<br>CLEAR the DTC. TEST the system for normal operation. |

ChryslerPowerTrain.org

## PINPOINT TEST C : DTC P0568: SPEED CONTROL INPUT SIGNAL LOW/HIGH RESISTANCE

WARNING: TO AVOID ACCIDENTAL DEPLOYMENT AND POSSIBLE PERSONAL INJURY, THE BACKUP POWER SUPPLY MUST BE DEPLETED BEFORE REPAIRING OR REPLACING ANY AIR BAG SUPPLEMENTAL RESTRAINT SYSTEM (SRS) COMPONENTS. TO DEPLETE THE BACKUP POWER SUPPLY ENERGY, DISCONNECT THE BATTERY GROUND CABLE AND WAIT ONE MINUTE. FAILURE TO FOLLOW THIS INSTRUCTION MAY RESULT IN PERSONAL INJURY.

| TEST CONDITIONS | DETAILS/RESULTS/ACTIONS |
|---|---|
| **C1: CHECK THE INTERNAL STEERING WHEEL CIRCUIT FOR HIGH RESISTANCE, RESUME SWITCH CIRCUIT** | |
| | 1 Disconnect the battery negative terminal.<br>REFER to: Battery Disconnect and Connect (414-01 Battery, Mounting and Cables, General Procedures). |
| | 2 Wait one minute for the system to become safe. |
| | 3 Disconnect the steering wheel switch electrical connector, SQ02. |
| | 4 Measure the resistance between pins 01 (SR) and 03 (S) of the speed control switch. |
| | 5 Operate the **RESUME** switch. |
| | Does the resistance switch between 4300 and 2100 ohms as the switch is operated?<br>**Yes**<br>GO to C2.<br>**No**<br>INSTALL a new speed control switch assembly.<br>REFER to: Speed Control Switch (310-03 Speed Control, Removal and Installation).<br>CLEAR the DTC. TEST the system for normal operation. |
| **C2: CHECK THE INTERNAL STEERING WHEEL CIRCUIT FOR HIGH RESISTANCE, CANCEL SWITCH CIRCUIT** | |
| | 1 Operate the **CANCEL** switch. |
| | Does the resistance switch between 4300 and zero ohms as the switch is operated?<br>**Yes**<br>GO to C3.<br>**No**<br>INSTALL a new speed control switch assembly.<br>REFER to: Speed Control Switch (310-03 Speed Control, Removal and Installation).<br>CLEAR the DTC. TEST the system for normal operation. |
| **C3: CHECK THE INTERNAL STEERING WHEEL CIRCUIT FOR HIGH RESISTANCE, SET/+ SWITCH CIRCUIT** | |
| | 1 Operate the **SET/+** switch. |
| | Does the resistance switch between 4300 and 1100 ohms as the switch is operated?<br>**Yes**<br>GO to C4.<br>**No**<br>INSTALL a new speed control switch assembly.<br>REFER to: Speed Control Switch (310-03 Speed Control, Removal and Installation).<br>CLEAR the DTC. TEST the system for normal operation. |
| **C4: CHECK THE INTERNAL STEERING WHEEL CIRCUIT FOR HIGH RESISTANCE, SET/- SWITCH CIRCUIT** | |
| | 1 Operate the **SET/-** switch. |
| | Does the resistance switch between 4300 and 120 ohms as the switch is operated?<br>**Yes**<br>GO to C5.<br>**No**<br>INSTALL a new speed control switch assembly.<br>REFER to: Speed Control Switch (310-03 Speed Control, Removal and Installation).<br>CLEAR the DTC. TEST the system for normal operation. |
| **C5: CHECK THE STEERING WHEEL CLOCKSPRING FOR HIGH RESISTANCE** | |
| | 1 Disconnect the clockspring electrical connector, FC117. |
| | 2 Measure the resistance between FC117, pin 06 and the steering wheel switch electrical connector, SQ02 pin 03 (S). |
| | Is the resistance greater than 5 ohms?<br>**Yes**<br>INSTALL a new clockspring.<br>REFER to: Clockspring (501-20B Supplemental Restraint System, Removal and Installation).<br>CLEAR the DTC. TEST the system for normal operation.<br>**No**<br>GO to C6. |
| **C6: CHECK THE STEERING WHEEL CLOCKSPRING FOR HIGH RESISTANCE** | |
| | 1 Measure the resistance between FC117, pin 08 and the steering wheel switch electrical connector, SQ02 pin 01 (SR). |
| | Is the resistance greater than 5 ohms?<br>**Yes**<br>INSTALL a new clockspring.<br>REFER to: Clockspring (501-20B Supplemental Restraint System, Removal and Installation).<br>CLEAR the DTC. TEST the system for normal operation.<br>**No**<br>GO to C7. |
| **C7: CHECK THE STEERING WHEEL CLOCKSPRING TO ECM CIRCUITS FOR HIGH RESISTANCE** | |
| | 1 Disconnect the ECM electrical connector, PI01. |
| | 2 Measure the resistance between FC117, pin 06 (YG) and PI01, pin 48 (YG). |
| | 3 Measure the resistance between FC117, pin 08 (YR) and PI01, pin 47 (YR). |
| | Is either resistance greater than 5 ohms?<br>**Yes**<br>REPAIR the high resistance circuit. For additional information, refer to the wiring diagrams. TEST the system for normal operation.<br>**No**<br>Contact dealer technical support for advice on possible ECM failure. |

## PINPOINT TEST D : DTC P1571: BRAKE ON/OFF SWITCH, BRAKE CANCEL SWITCH MALFUNCTION

| TEST CONDITIONS | DETAILS/RESULTS/ACTIONS |
|---|---|
| **D1: CHECK THE POWER SUPPLY TO THE BRAKE CANCEL SWITCH** | |
| | 1 Disconnect the brake cancel switch electrical connector, CA36. |
| | 2 Turn the ignition switch to the **ON** position. |
| | 3 Measure the voltage between CA36, pin 01 (OY) and GROUND. |

GETtheMANUALS.org

| | |
|---|---|
| | Is the voltage greater than 10 volts?<br>**Yes**<br>GO to D2.<br>**No**<br>REPAIR the circuit between the brake cancel switch and battery. This circuit includes the primary junction box, (fuse 35) and the rear power distribution box, (fuse 25). For additional information, refer to the wiring diagrams. CLEAR the DTC. TEST the system for normal operation. |
| **D2: CHECK THE BRAKE CANCEL SWITCH TO ECM CIRCUIT FOR HIGH RESISTANCE** | |
| | 1 Turn the ignition switch to the **OFF** position. |
| | 2 Disconnect the battery negative terminal.<br>REFER to: Battery Disconnect and Connect (414-01 Battery, Mounting and Cables, General Procedures). |
| | 3 Disconnect the ECM electrical connector, PI01. |
| | 4 Measure the resistance between CA36, pin 02 (OY) and PI01, pin 28 (OY). |
| | Is the resistance greater than 5 ohms?<br>**Yes**<br>REPAIR the high resistance circuit. For additional information, refer to the wiring diagrams. CLEAR the DTC. TEST the system for normal operation.<br>**No**<br>GO to D3. |
| **D3: CHECK THE BRAKE CANCEL SWITCH TO ECM CIRCUIT FOR SHORT TO B+** | |
| | 1 Reconnect the battery negative terminal.<br>REFER to: Battery Connect (414-01 Battery, Mounting and Cables, General Procedures). |
| | 2 Measure the voltage between CA36, pin 02 (OY) and GROUND. |
| | Is the voltage greater than 3 volts?<br>**Yes**<br>REPAIR the short circuit. For additional information, refer to the wiring diagrams. CLEAR the DTC. TEST the system for normal operation.<br>**No**<br>GO to D4. |
| **D4: CHECK THE BRAKE CANCEL SWITCH TO ECM CIRCUIT FOR SHORT TO GROUND** | |
| | 1 Measure the resistance between CA36, pin 02 (OY) and GROUND. |
| | Is the resistance less than 10,000 ohms?<br>**Yes**<br>REPAIR the short circuit. For additional information, refer to the wiring diagrams. CLEAR the DTC. TEST the system for normal operation.<br>**No**<br>INSTALL a new brake cancel switch assembly. CLEAR the DTC. TEST the system for normal operation. |

## PINPOINT TEST E : DTC P1697: ADAPTIVE SPEED CONTROL HEADWAY SWITCH(ES) CIRCUIT MALFUNCTION

WARNING: TO AVOID ACCIDENTAL DEPLOYMENT AND POSSIBLE PERSONAL INJURY, THE BACKUP POWER SUPPLY MUST BE DEPLETED BEFORE REPAIRING OR REPLACING ANY AIR BAG SUPPLEMENTAL RESTRAINT SYSTEM (SRS) COMPONENTS. TO DEPLETE THE BACKUP POWER SUPPLY ENERGY, DISCONNECT THE BATTERY GROUND CABLE AND WAIT ONE MINUTE. FAILURE TO FOLLOW THIS INSTRUCTION MAY RESULT IN PERSONAL INJURY.

| TEST CONDITIONS | DETAILS/RESULTS/ACTIONS |
|---|---|
| **E1: CHECK THE SPEED CONTROL HEADWAY - SWITCH FUNCTION** | |
| | 1 Disconnect the battery negative terminal.<br>REFER to: Battery Disconnect and Connect (414-01 Battery, Mounting and Cables, General Procedures). |
| | 2 Wait one minute for the system to become safe. |
| | 3 Disconnect the steering wheel switch electrical connector, SQ02. |
| | 4 Connect an ohmmeter across pins 01 (SR)and 03 (S) of the speed control switch. |
| | 5 Operate the **HEADWAY** switch. |
| | Does the resistance switch between 4300 and 600 ohms as the switch is operated?<br>**Yes**<br>GO to E2.<br>**No**<br>INSTALL a new speed control switch assembly.<br>REFER to: Speed Control Switch (310-03 Speed Control, Removal and Installation).<br>CLEAR the DTC. TEST the system for normal operation. |
| **E2: CHECK THE SPEED CONTROL HEADWAY + SWITCH FUNCTION** | |
| | 1 Operate the **HEADWAY** switch. |
| | Does the resistance switch between 4300 and 300 ohms as the switch is operated?<br>**Yes**<br>GO to E3.<br>**No**<br>INSTALL a new speed control switch assembly.<br>REFER to: Speed Control Switch (310-03 Speed Control, Removal and Installation).<br>CLEAR the DTC. TEST the system for normal operation. |
| **E3: CHECK THE SPEED CONTROL SWITCH INTERNAL HARNESS FOR SHORT CIRCUIT TO GROUND** | |
| | 1 Measure the resistance between the steering wheel switch electrical connector, SQ02 pin 01 (SR) and GROUND. |
| | 2 Measure the resistance between the steering wheel switch electrical connector, SQ02 pin 03 (S) and GROUND. |
| | Is either resistance less than 10,000 ohms?<br>**Yes**<br>REPAIR the short circuit. For additional information, refer to the wiring diagrams. CLEAR the DTC. TEST the system for normal operation.<br>**No**<br>Check the clockspring for short circuit to ground. GO to Pinpoint Test B. test 2. (The clockspring is the same for adaptive and non-adaptive vehicles). |

## PINPOINT TEST F : DTC C1935, B2369: ADAPTIVE SPEED CONTROL CHIME MODULE CIRCUIT MALFUNCTION

| TEST CONDITIONS | DETAILS/RESULTS/ACTIONS |
|---|---|
| **F1: CHECK THE POWER SUPPLY TO THE ADAPTIVE SPEED CONTROLCHIME MODULE** | |
| | 1 Disconnect the adaptive speed control chime module electrical connector, FC120. |
| | 2 Turn the ignition switch to the **ON** position. |
| | 3 Measure the voltage between FC120, pin 01 (YR) and GROUND. |

CETheMANUALS.org

| | |
|---|---|
| | Is the voltage greater than 10 volts?<br>**Yes**<br>GO to F2.<br>**No**<br>REPAIR the circuit between the adaptive speed control chime module and battery. This circuit includes the primary junction box, (fuse 16). For additional information, refer to the wiring diagrams. CLEAR the DTC. TEST the system for normal operation. |
| **F2: CHECK THE ADAPTIVE SPEED CONTROL CHIME MODULE TO ASCCM CIRCUIT FOR HIGH RESISTANCE** | |
| | 1 Turn the ignition switch to the **OFF** position. |
| | 2 Disconnect the battery negative terminal.<br>REFER to: Battery Disconnect and Connect (414-01 Battery, Mounting and Cables, General Procedures). |
| | 3 Disconnect the ASCCM electrical connector, FH107. |
| | 4 Measure the resistance between FC120, pin 03 (G) and FH107, pin 06 (G). |
| | Is the resistance greater than 5 ohms?<br>**Yes**<br>REPAIR the high resistance circuit. For additional information, refer to the wiring diagrams. CLEAR the DTC. TEST the system for normal operation.<br>**No**<br>GO to F3. |
| **F3: CHECK THE ADAPTIVE SPEED CONTROL CHIME MODULE TO ASCCM CIRCUIT FOR SHORT TO B+** | |
| | 1 Reconnect the battery negative terminal.<br>REFER to: Battery Connect (414-01 Battery, Mounting and Cables, General Procedures). |
| | 2 Measure the voltage between FC120, pin 03 (G) and GROUND. |
| | Is the voltage greater than 3 volts?<br>**Yes**<br>REPAIR the short circuit. For additional information, refer to the wiring diagrams. CLEAR the DTC. TEST the system for normal operation.<br>**No**<br>GO to F4. |
| **F4: CHECK THE ADAPTIVE SPEED CONTROL CHIME MODULE TO ASCCM CIRCUIT FOR SHORT TO GROUND** | |
| | 1 Measure the resistance between FC120, pin 03 (G) and GROUND. |
| | Is the resistance less than 10,000 ohms?<br>**Yes**<br>REPAIR the short circuit. For additional information, refer to the wiring diagrams. CLEAR the DTC. TEST the system for normal operation.<br>**No**<br>INSTALL a new adaptive speed control chime module. CLEAR the DTC. TEST the system for normal operation. |

GETtheMANUALS.org

# Speed Control - Speed ControlVIN Range: N13089->N52047

Diagnosis and Testing

## Principles of Operation

There are two types of speed (cruise) control fitted, adaptive cruise control (ACC) and non-adaptive cruise control.

The non-adaptive system maintains a road speed selected by the driver from the steering wheel switches, and is cancelled by inputs from the steering wheel **CANCEL** switch, the brake pedal (the system will disengage if the brake pedal is pressed), road speed (the system will disengage if the road speed falls below 26 kph [16 mph]), gear selector position (the system will disengage if **NEUTRAL, PARK** or **REVERSE** gears are selected), traction or stability control (the system will disengage if the traction or stability control is activated).

The adaptive system also maintains a road speed selected by the driver from the steering wheel switches, and is cancelled by the same inputs (the only difference being that the stored set speed will show in the message center display), but can also maintain a selected gap from the vehicle in front.

The ACC system fitted to this vehicle varies from past ACC systems in that the forward looking radar (FLR) sensor is a separate component and not integrated into the ACC module.

When the system is enabled, the vehicle will maintain the selected speed until another vehicle is detected travelling in the same lane and direction, when it will enter **FOLLOW MODE.**

In this mode, the vehicle will maintain a time gap from the vehicle in front, rather than the selected speed. **This is not a fault**, but a designed feature of the system. The time gap is adjustable, using the **HEADWAY** switches on the steering wheel switch assembly, but will default to a longer gap, unless overridden by the driver.

When the vehicle enters **FOLLOW MODE**, the message center will display the **ACC** tell-tale symbol (see the owner's handbook), with a **GAP** indication for four seconds, and the vehicle will maintain the gap from the vehicle in front until:

- the vehicle in front accelerates to a speed above the stored set speed, in which case the stored set speed will be resumed.
- the vehicle in front moves out of lane, or out of view, in which case the stored set speed will be resumed.
- the vehicle in front slows to below 26 km/h (16 mph), at which speed the system disengages, the message **DRIVER INTERVENE** will display on the message center accompanied by a chime, and any braking applied by the ACC system will be smoothly reduced. **This is not a fault** but may involve the driver having to take control and brake him/herself.
- a new gap distance is set by the driver from the steering wheel switches.

The ACC system can apply the brakes to maintain the gap to the vehicle in front. The braking force which the system can apply is limited, but can be overridden by the driver braking. This action will cancel the cruise control function, but the system will "remember" the stored set speed, and will resume the stored set speed by the driver pressing the **RESUME** switch on the steering wheel switch assembly.

• NOTE: When the system applies the brakes, the brake lights will function exactly as if the driver were braking.

It is possible (for example, when a slow-moving vehicle pulls out into the lane in front), for the degree of braking necessary to avoid a collision to exceed the maximum level of the ACC system. Should this happen, an audible warning will sound, accompanied by a **red** warning light and a **DRIVER INTERVENE** display on the message center, at which point, the driver must take action. **This is not a fault**, but a designed feature of the system.

Should the driver need to go faster than the stored set speed, he/she can override the system simply by pressing the accelerator, in which case, the message center will display **CRUISE OVERRIDE.** When the pedal is released, the system will resume operation in whichever mode is appropriate, follow or selected speed.

## Detection

As with most sensors, there are certain conditions under which detection issues can occur. The owner/driver's attention should be drawn to the driver's handbook to avoid misunderstandings as to what is, and isn't, a fault.

Detection issues may occur:

- when driving on a different line to the vehicle in front
- when vehicles edge into your lane.
- when going into or coming out of a bend.
- with detecting motorcycles.
- with detecting stationary objects, such as traffic queues, broken down vehicles, etc.

In circumstances such as these, the ACC system may brake late or unexpectedly, or may increase speed. **This is not a fault**, but is the system reacting to detection issues.

The owner's handbook makes it clear that the system should only be used under suitable conditions, but technicians should be wary of wasting time on complaints which are not actually faults.

## Inspection and verification

1. **1.** Verify the customer concern.
2. **2.** Confirm which, if any, warning lights and/or messages were displayed on the instrument cluster.
3. **3.** Visually inspect for obvious signs of mechanical or electrical damage.

**Visual Inspection Chart**

| Mechanical | Electrical |
|---|---|
| • Forward looking radar (FLR) sensor levelling<br>• Engine oil level<br>• Cooling system coolant level<br>• Fuel level<br>• Fuel contamination/grade/quality<br>• Throttle body<br>• Poly-vee belt | • Fuses<br>• Wiring harness<br>• Electrical connector(s)<br>• Controller Area Network (CAN) circuits<br>• Sensor(s)<br>• Forward looking radar (FLR) sensor<br>• Engine control module (ECM)<br>• Adaptive speed control control module<br>• Transmission control module (TCM) |

GETtheMANUALS.org

4. **4.** If an obvious cause for an observed or reported concern is found, correct the cause (if possible) before proceeding to the next step.

5. **5.** If the cause is not visually evident use the Jaguar approved diagnostic system or a scan tool to retrieve the fault codes before proceeding to the diagnostic trouble code (DTC) index chart, or the symptom chart if no DTCs are set.

## Forward looking radar (FLR) sensor levelling

An incorrectly aligned FLR sensor can cause incorrect system operation. Before starting any repair work on the ACC system, check the levelling of the FLR sensor. This is carried out in a similar way to the module levelling in previous systems.
REFER to: Speed Control Module Alignment (310-03 Speed Control, General Procedures).

## Symptom Chart

**Symptom Chart**
• NOTE: Check and rectify basic faults before beginning diagnostic routines involving pinpoint tests.

| Symptom | Possible source | Action |
|---|---|---|
| Speed control inhibited or disabled | • Default mode enabled<br>• Supply voltage to ACC module<br>• Supply voltage to FLR sensor<br>• Steering wheel speed control switch(es)<br>• Steering wheel speed control switch circuit<br>• Throttle sensors<br>• Stop lamp switch | • Check message center for default message.<br>• For ACC module circuit tests, GO to Pinpoint Test H.<br>• For FLR sensor circuit tests, GO to Pinpoint Test H.<br>• For steering wheel speed control switch tests, GO to Pinpoint Test I.<br>• For steering wheel speed control switch circuit tests, GO to Pinpoint Test I.<br>• For 3.0 L engine throttle position sensor tests, REFER to: Electronic Engine Controls - VIN Range: N80181->R99999 (303-14A Electronic Engine Controls - 2.5L NA V6 - AJV6/3.0L NA V6 - AJ27, Diagnosis and Testing).<br>• For 3.5 and 4.2 L engine throttle position sensor tests, REFER to: Electronic Engine Controls - VIN Range: N80181->R99999 (303-14B Electronic Engine Controls - V8 4.2L Petrol/V8 S/C 4.2L Petrol, Diagnosis and Testing).<br>• For brake cancel switch tests, GO to Pinpoint Test J. |
| Unable to regulate/adjust vehicle speed | • Steering wheel switch malfunction | • For speed control switch circuit tests, GO to Pinpoint Test I.<br>• For speed control switch input signal tests, GO to Pinpoint Test I. |
| Unable to cancel speed control from steering wheel | • Steering wheel switch malfunction | • For speed control switch circuit tests, GO to Pinpoint Test I.<br>• For speed control switch input signal tests, GO to Pinpoint Test I. |
| Unable to cancel speed control from brake pedal | • Brake cancel switch malfunction | • For brake cancel switch tests, GO to Pinpoint Test J. |

## Driver Information Chart

• NOTE: Use this table to identify DTC's associated with the message center display, then refer to the DTC index for possible sources and actions.

| Warning light | Message | Default Mode | DTC |
|---|---|---|---|
| Red | Engine systems fault | Engine shut-down (all cylinders fuel cut) | P1224 |
| Red | Engine systems fault | Limp-Home | P1229 |
| Red | Engine systems fault | Limp-Home | P0121, P0122, P0123, P0222, P0223 |
| Red | Engine systems fault | Limp-Home | P1251, P1631 |
| Red | Engine systems fault | Limp-Home | P1611 |
| Red | Engine systems fault | Limp-Home | P1633 |
| Red | Engine systems fault | High idle | P1344, P1122, P1123, P1215, P1216 |
| Red | Restricted performance | Limp-Home unavailable | P1254 |
| Red | Restricted performance | Limp-Home unavailable | P1250 |
| Red | Restricted performance | Safety redundancy | P1657, P1658 |
| Red | Restricted performance | Safety redundancy | P1634 |
| None | Cruise overrride | None | None. See principles of operation in this section |
| Red | Driver intervene | None | None. See principles of operation in this section |
| Amber | Cruise not available | None | P1571 |
| Amber | Cruise not available | None | P0568 |
| Amber | Cruise not available | None | P0567 |
| Amber | Cruise not available | None | P0570 |
| Amber | Cruise not available | None | P0569 |
| Amber | Cruise not available | None | P0566 |
| Amber | Cruise not available | None | P1697 |
| Amber | Cruise not available | None | P1696 |
| Amber | Restricted performance | Engine speed limited | P0116, P0117, P0118, P0125 |
| Amber | Restricted performance | Engine speed limited | P0101, P0102, P0103, P0104 |
| Amber | Restricted performance | Engine speed limited | P0300, P0301, p0302, P0303, P0304, P0305, P0306, P0307, P0308, P1313, P1314 |

GETtheMANUALS.org

| Warning light | Message | Default Mode | DTC |
|---|---|---|---|
| Amber | Restricted performance | Engine speed limited | P0327, P0328, P0332, P0333, P1648 |
| Amber | Restricted performance | Engine speed limited | P0351, P0352, P0353, P0354, P0355, P0356, P0357, P0358, P1367, P1368 |
| Amber | Restricted performance | Engine speed limited | P0171, P0172, P0174, P0175 |
| Amber | Restricted performance | Engine speed limited | P0201, P0202, P0203, P0204, P0205, P0206, P0207, P0208 |
| Amber | Restricted performance | Engine speed limited | P0335, P0336 |
| Amber | Restricted performance | Engine speed limited, reverse throttle progression enabled | P1642 |
| Amber | Restricted performance | Engine speed limited, reverse throttle progression enabled | P1643 |
| Amber | Restricted performance | Engine speed limited, reverse throttle progression enabled | P0096, P0097, P0098 |
| Amber | Restricted performance | Engine speed limited, reverse throttle progression enabled | P1474 |
| Amber | Restricted performance | Engine speed limited | P1234, P1236, P1338 |

## DTC index

| DTC | Description | Possible Source | Action |
|---|---|---|---|
| C1291 | Forward looking radar (FLR) sensor temperature out of range | • FLR sensor is too warm or too cold<br>• FLR sensor failure | Warm up or cool down the FLR sensor to above 40°C or below 70°C. CLEAR the DTC. TEST the system for normal operation. If the DTC is repeated, INSTALL a new FLR sensor.<br>REFER to: Speed Control Sensor (310-03 Speed Control, Removal and Installation). |
| C1292 | FLR sensor blockage detection | • FLR sensor is blocked | Remove any blockages (snow/leaves etc.) from the FLR sensor. |
| C1293 | FLR sensor automatic alignment offset angle out of range | • Sensor requires mechanical levelling<br>• FLR sensor is in service alignment mode | Check FLR sensor levelling (This is done in a similar way to control module alignment in earlier systems). Complete service alignment. Refer to the Jaguar approved diagnostic system. |
| C1294 | Active speed or vehicle speed out of range | • Speed related fault with the engine control module (ECM), transmission control module (TCM), dynamic suspension control module (DSCM), or instrument cluster modules<br>• ACC module failure | Carry out a full vehicle DTC check. Check the ECM, TCM, DSCM, or instrument cluster modules for stored codes. If no DTC's are indicated in the ECM, TCM, DSCM, or instrument cluster modules, INSTALL a new ACC module.<br>REFER to: Speed Control Module (310-03 Speed Control, Removal and Installation). |
| C1459 | Forward alert switch circuit failure | • Forward alert switch failure<br>• Forward alert switch to ACC module circuit short circuit to B+<br>• Forward alert switch to ACC module circuit open circuit | For forward alert switch circuit tests, GO to Pinpoint Test A. |
| C1748 | Forward alert switch circuit short to GROUND | • Forward alert switch failure<br>• Forward alert switch to ACC module circuit short circuit to GROUND | For forward alert switch circuit tests, GO to Pinpoint Test B. |
| B2373 | Forward alert switch LED 1 circuit failure | • Forward alert switch failure<br>• Forward alert switch LED to ACC module circuit short to B+<br>• Forward alert switch LED to ACC module circuit open circuit | For forward alert switch LED tests, GO to Pinpoint Test C. |
| C1920 | Forward alert switch LED 1 circuit short to GROUND | • Forward alert switch failure<br>• Forward alert switch LED to ACC module circuit short circuit to GROUND | For forward alert switch LED tests, GO to Pinpoint Test D. |
| C1935 | Chime circuit failure | • Chime module to ACC module circuit short to B+<br>• Chime module to ACC module circuit open circuit | For adaptive speed control chime module circuit tests, GO to Pinpoint Test E. |
| B1342 | Internal ACC module fault | • ACC module failure | INSTALL a new ACC module.<br>REFER to: Speed Control Module (310-03 Speed Control, Removal and Installation). |
| B2369 | Chime output circuit short to GROUND | • Chime output circuit short to GROUND | For adaptive speed control chime module circuit tests, GO to Pinpoint Test F. |
| B2477 | Module configuration failure | • ACC module is not correctly configured | Configure the ACC module. Refer to the Jaguar approved diagnostic system. |
| U2023 | CAN fault message received from other network modules | • CAN/ACC module related fault with the ECM, TCM, DSCM, or instrument cluster modules<br>• ACC module internal CAN fault<br>• CAN network fault | Carry out a full vehicle DTC check. Check the ECM, TCM, DSCM, or instrument cluster modules for stored ACC related codes. For CAN circuit tests,<br>REFER to: Communications Network - VIN Range: N52048->N99999 (418-00 Module Communications Network, Diagnosis and Testing). |
| U2520 | CAN IC missing | • IC CAN circuit short to B+, open circuit, short circuit to ground | For CAN circuit tests,<br>REFER to: Communications Network - VIN Range: N52048->N99999 (418-00 Module Communications Network, Diagnosis and Testing). |
| U2521 | CAN DSCM missing | • DSCM CAN circuit short to B+, open circuit, short circuit to ground | For CAN circuit tests,<br>REFER to: Communications Network - VIN Range: N52048->N99999 (418-00 Module Communications Network, Diagnosis and Testing). |

GETtheMANUALS.com

| DTC | Description | Possible Source | Action |
|---|---|---|---|
| U2522 | CAN TCM missing | • TCM CAN circuit short to B+, open circuit, short circuit to ground | For CAN circuit tests, REFER to: Communications Network - VIN Range: N52048->N99999 (418-00 Module Communications Network, Diagnosis and Testing). |
| U2523 | CAN ECM missing | • ECM CAN circuit short to B+, open circuit, short circuit to ground | For CAN circuit tests, REFER to: Communications Network - VIN Range: N52048->N99999 (418-00 Module Communications Network, Diagnosis and Testing). |
| U2516 | CAN network fault | • Can network circuit fault | For CAN circuit tests, REFER to: Communications Network - VIN Range: N52048->N99999 (418-00 Module Communications Network, Diagnosis and Testing). |
| U0433 | Invalid data from FLR sensor | • FLR sensor failure | INSTALL a new FLR sensor. REFER to: Speed Control Sensor (310-03 Speed Control, Removal and Installation). |
| U0235 | No communication with FLR sensor | • FLR sensor<br>• FLR sensor CAN circuit | FLR sensor CAN circuit tests, GO to Pinpoint Test G. |
| P0610 | ACC module vehicle option configuration error | • ECM configuration does not support ACC | Check the configuration of the ECM. Refer to the Jaguar approved diagnostic system. |
| P2583 | FLR sensor data | • FLR sensor<br>• FLR sensor CAN circuit | FLR sensor CAN circuit tests, GO to Pinpoint Test G. |

## Pinpoint Tests

**PINPOINT TEST A : DTC C1459: FORWARD ALERT SWITCH CIRCUIT TESTS**

CAUTION: When probing connectors to take measurements in the course of the pinpoint tests, use the adaptor kit, part number 3548-1358-00.

• NOTE: When performing electrical voltage or resistance tests, always use a digital multimeter (DMM) accurate to 3 decimal places, and with an up-to-date calibration certificate. When testing resistance, always take the resistance of the DMM leads into account.

• NOTE: For a quick function check of the switch action, monitor the LED function as the switch is operated.

| TEST CONDITIONS | DETAILS/RESULTS/ACTIONS |
|---|---|
| **A1: CHECK THE FORWARD ALERT SWITCH FOR OPEN CIRCUIT** | |
| | 1 Disconnect the battery negative terminal. |
| | 2 Disconnect the ACC module connector IP78. |
| | 3 Disconnect the forward alert switch connector IP50. |
| | 4 Measure the resistance between the ACC module connector IP78, pin 20 (U) and forward alert switch connector IP50, pin 04 (U). |
| | Is the resistance greater than 5 ohms?<br>**Yes**<br>REPAIR the high resistance circuit. For additional information, refer to the wiring diagrams. CLEAR the DTC. TEST the system for normal operation.<br>**No**<br>GO to A2. |
| **A2: CHECK THE FORWARD ALERT SWITCH FOR SHORT CIRCUIT TO B+** | |
| | 1 Reconnect the battery negative terminal. |
| | 2 Turn the ignition switch to the **ON** position. |
| | 3 Measure the voltage between the ACC module connector IP78, pin 20 (U) and GROUND. |
| | Is the voltage greater than 3 volts?<br>**Yes**<br>REPAIR the short circuit. For additional information, refer to the wiring diagrams. CLEAR the DTC. TEST the system for normal operation.<br>**No**<br>INSTALL a new forward alert switch.<br>REFER to: Speed Control Deactivator Switch (310-03 Speed Control, Removal and Installation).<br>CLEAR the DTC. TEST the system for normal operation. If the DTC is repeated, INSTALL a new ACC module.<br>REFER to: Speed Control Module (310-03 Speed Control, Removal and Installation). |

**PINPOINT TEST B : DTC C1748: FORWARD ALERT SWITCH CIRCUIT TEST**

CAUTION: When probing connectors to take measurements in the course of the pinpoint tests, use the adaptor kit, part number 3548-1358-00.

• NOTE: When performing electrical voltage or resistance tests, always use a digital multimeter (DMM) accurate to 3 decimal places, and with an up-to-date calibration certificate. When testing resistance, always take the resistance of the DMM leads into account.

• NOTE: For a quick function check of the switch action, monitor the LED function as the switch is operated.

| TEST CONDITIONS | DETAILS/RESULTS/ACTIONS |
|---|---|
| **B1: CHECK THE FORWARD ALERT SWITCH CIRCUIT FOR SHORT CIRCUIT TO GROUND** | |
| | 1 Disconnect the battery negative terminal. |
| | 2 Disconnect the ACC module connector IP78. |
| | 3 Disconnect the forward alert switch connector IP50. |
| | 4 Measure the resistance between the ACC module connector, pin 20 (U) and GROUND. |
| | Is the resistance less than 10,000 ohms?<br>**Yes**<br>REPAIR the short circuit. For additional information, refer to the wiring diagrams. CLEAR the DTC. TEST the system for normal operation.<br>**No**<br>INSTALL a new forward alert switch.<br>REFER to: Speed Control Deactivator Switch (310-03 Speed Control, Removal and Installation).<br>CLEAR the DTC. TEST the system for normal operation. If the DTC is repeated, INSTALL a new ACC module.<br>REFER to: Speed Control Module (310-03 Speed Control, Removal and Installation). |

GETtheMANUALS.org

**PINPOINT TEST C : DTC B2373: FORWARD ALERT SWITCH LED CIRCUIT TESTS**

CAUTION: When probing connectors to take measurements in the course of the pinpoint tests, use the adaptor kit, part number 3548-1358-00.

• NOTE: When performing electrical voltage or resistance tests, always use a digital multimeter (DMM) accurate to 3 decimal places, and with an up-to-date calibration certificate. When testing resistance, always take the resistance of the DMM leads into account.

| TEST CONDITIONS | DETAILS/RESULTS/ACTIONS |
|---|---|
| **C1: CHECK THE FORWARD ALERT SWITCH LED CIRCUIT FOR OPEN CIRCUIT** | |
| | 1 Disconnect the battery negative terminal. |
| | 2 Disconnect the ACC module connector IP78. |
| | 3 Disconnect the forward alert switch connector IP50. |
| | 4 Measure the resistance between the ACC module connector IP78, pin 05 (U) and forward alert switch connector IP50, pin 07 (U). |
| | Is the resistance greater than 5 ohms?<br>**Yes**<br>REPAIR the high resistance circuit. For additional information, refer to the wiring diagrams. CLEAR the DTC. TEST the system for normal operation.<br>**No**<br>GO to C2. |
| **C2: CHECK THE FORWARD ALERT SWITCH LED CIRCUIT FOR SHORT CIRCUIT TO B+** | |
| | 1 Reconnect the battery negative terminal. |
| | 2 Turn the ignition switch to the **ON** position. |
| | 3 Measure the voltage between the ACC module connector IP78, pin 05 (U) and GROUND. |
| | Is the voltage greater than 3 volts?<br>**Yes**<br>REPAIR the short circuit. For additional information, refer to the wiring diagrams. CLEAR the DTC. TEST the system for normal operation.<br>**No**<br>INSTALL a new forward alert switch.<br>REFER to: Speed Control Deactivator Switch (310-03 Speed Control, Removal and Installation).<br>CLEAR the DTC. TEST the system for normal operation. If the DTC is repeated, INSTALL a new ACC module, not the forward looking sensor.<br>REFER to: Speed Control Module (310-03 Speed Control, Removal and Installation). |

## PINPOINT TEST D : DTC C1920: FORWARD ALERT SWITCH LED CIRCUIT TESTS

CAUTION: When probing connectors to take measurements in the course of the pinpoint tests, use the adaptor kit, part number 3548-1358-00.

• NOTE: When performing electrical voltage or resistance tests, always use a digital multimeter (DMM) accurate to 3 decimal places, and with an up-to-date calibration certificate. When testing resistance, always take the resistance of the DMM leads into account.

| TEST CONDITIONS | DETAILS/RESULTS/ACTIONS |
|---|---|
| **D1: CHECK THE FORWARD ALERT SWITCH LED CIRCUIT FOR SHORT CIRCUIT TO GROUND** | |
| | 1 Disconnect the battery negative terminal. |
| | 2 Disconnect the ACC module connector IP78. |
| | 3 Disconnect the forward alert switch connector IP50. |
| | 4 Measure the resistance between the ACC module connector, pin 05 (U) and GROUND. |
| | Is the resistance less than 10,000 ohms?<br>**Yes**<br>REPAIR the short circuit. For additional information, refer to the wiring diagrams. CLEAR the DTC. TEST the system for normal operation.<br>**No**<br>INSTALL a new forward alert switch.<br>REFER to: Speed Control Deactivator Switch (310-03 Speed Control, Removal and Installation).<br>CLEAR the DTC. TEST the system for normal operation. If the DTC is repeated, INSTALL a new ACC module, not the forward looking sensor.<br>REFER to: Speed Control Module (310-03 Speed Control, Removal and Installation). |

## PINPOINT TEST E : DTC C1935: CHIME CIRCUIT TESTS

CAUTION: When probing connectors to take measurements in the course of the pinpoint tests, use the adaptor kit, part number 3548-1358-00.

• NOTE: When performing electrical voltage or resistance tests, always use a digital multimeter (DMM) accurate to 3 decimal places, and with an up-to-date calibration certificate. When testing resistance, always take the resistance of the DMM leads into account.

| TEST CONDITIONS | DETAILS/RESULTS/ACTIONS |
|---|---|
| **E1: CHECK THE CHIME CIRCUIT FOR OPEN CIRCUIT** | |
| | 1 Disconnect the battery negative terminal. |
| | 2 Disconnect the ACC module connector IP78. |
| | 3 Disconnect the chime module connector IP11. |
| | 4 Measure the resistance between the ACC module connector IP78, pin 06 (R) and chime module connector IP11, pin 03 (R). |
| | Is the resistance greater than 5 ohms?<br>**Yes**<br>REPAIR the open circuit. For additional information, refer to the wiring diagrams. CLEAR the DTC. TEST the system for normal operation.<br>**No**<br>GO to E2. |
| **E2: CHECK THE CHIME CIRCUIT FOR SHORT CIRCUIT TO B+** | |
| | 1 Reconnect the battery negative terminal. |
| | 2 Connect the battery ground terminal. |
| | 3 Turn the ignition switch to the **ON** position. |
| | 4 Measure the voltage between the ACC module connector IP78, pin 06 (R) and GROUND. |
| | Is the voltage greater than 3 volts?<br>**Yes**<br>REPAIR the short circuit. For additional information, refer to the wiring diagrams. CLEAR the DTC. TEST the system for normal operation.<br>**No**<br>INSTALL a new chime module. CLEAR the DTC. TEST the system for normal operation, If the DTC is repeated, |

GETtheMANUALS.org

| | |
|---|---|
| | INSTALL a new ACC module, not the forward looking sensor.<br>REFER to: Speed Control Module (310-03 Speed Control, Removal and Installation). |

## PINPOINT TEST F : DTC B2369: CHIME CIRCUIT TEST

CAUTION: When probing connectors to take measurements in the course of the pinpoint tests, use the adaptor kit, part number 3548-1358-00.

• NOTE: When performing electrical voltage or resistance tests, always use a digital multimeter (DMM) accurate to 3 decimal places, and with an up-to-date calibration certificate. When testing resistance, always take the resistance of the DMM leads into account.

| TEST CONDITIONS | DETAILS/RESULTS/ACTIONS |
|---|---|
| **F1: CHECK THE CHIME CIRCUIT FOR SHORT CIRCUIT TO GROUND** | |
| | 1 Disconnect the battery negative terminal. |
| | 2 Disconnect the ACC module connector IP78. |
| | 3 Disconnect the chime module connector IP11. |
| | 4 Measure the resistance between the ACC module connector IP78, pin 06 (R) and GROUND. |
| | Is the resistance less than 10,000 ohms?<br>**Yes**<br>REPAIR the short circuit. For additional information, refer to the wiring diagrams. CLEAR the DTC. TEST the system for normal operation.<br>**No**<br>INSTALL a new chime module. CLEAR the DTC. TEST the system for normal operation. If the DTC is repeated, INSTALL a new ACC module, not the forward looking sensor.<br>REFER to: Speed Control Module (310-03 Speed Control, Removal and Installation). |

## PINPOINT TEST G : DTC U0235, P2583: FLR SENSOR CAN CIRCUIT TESTS

CAUTION: When probing connectors to take measurements in the course of the pinpoint tests, use the adaptor kit, part number 3548-1358-00.

• NOTE: When performing electrical voltage or resistance tests, always use a digital multimeter (DMM) accurate to 3 decimal places, and with an up-to-date calibration certificate. When testing resistance, always take the resistance of the DMM leads into account.

| TEST CONDITIONS | DETAILS/RESULTS/ACTIONS |
|---|---|
| **G1: CHECK THE ACC MODULE TO FLR SENSOR CAN 'L' CIRCUIT FOR OPEN CIRCUIT** | |
| | 1 Disconnect the battery negative terminal. |
| | 2 Disconnect the ACC module connector IP78. |
| | 3 Disconnect the FLR sensor connector EC23. |
| | 4 Measure the resistance between the ACC module connector IP78, pin 02 (U) and FLR sensor connector EC23, pin 03 (U). |
| | Is the resistance greater than 5 ohms?<br>**Yes**<br>CHECK connector IP55 for security. REPAIR the open circuit. For additional information, refer to the wiring diagrams. CLEAR the DTC. TEST the system for normal operation.<br>**No**<br>GO to G2. |
| **G2: CHECK THE ACC MODULE TO FLR SENSOR CAN 'L' CIRCUIT FOR SHORT CIRCUIT TO B+** | |
| | 1 Reconnect the battery negative terminal. |
| | 2 Turn the ignition switch to the **ON** position. |
| | 3 Measure the voltage between the ACC module connector IP78, pin 02 (U) and GROUND. |
| | Is the voltage greater than 3 volts?<br>**Yes**<br>REPAIR the short circuit. For additional information, refer to the wiring diagrams. CLEAR the DTC. TEST the system for normal operation.<br>**No**<br>GO to G3. |
| **G3: CHECK THE ACC MODULE TO FLR SENSOR CAN 'L' CIRCUIT FOR SHORT CIRCUIT TO GROUND** | |
| | 1 Measure the resistance between the ACC module connector IP78, pin 02 (U) and GROUND. |
| | Is the resistance less than 10,000 ohms?<br>**Yes**<br>REPAIR the short circuit. For additional information, refer to the wiring diagrams. CLEAR the DTC. TEST the system for normal operation.<br>**No**<br>GO to G4. |
| **G4: CHECK THE ACC MODULE TO FLR SENSOR CAN 'H' CIRCUIT FOR OPEN CIRCUIT** | |
| | 1 Measure the resistance between the ACC module connector IP78, pin 03 (R) and FLR sensor connector EC23, pin 04 (R). |
| | Is the resistance greater than 5 ohms?<br>**Yes**<br>CHECK connector IP55 for security. REPAIR the open circuit. For additional information, refer to the wiring diagrams. CLEAR the DTC. TEST the system for normal operation.<br>**No**<br>GO to G5. |
| **G5: CHECK THE ACC MODULE TO FLR SENSOR CAN 'H' CIRCUIT FOR SHORT CIRCUIT TO B+** | |
| | 1 Measure the voltage between the ACC module connector IP78, pin 03 (R) and GROUND. |
| | Is the voltage greater than 3 volts?<br>**Yes**<br>REPAIR the short circuit. For additional information, refer to the wiring diagrams. CLEAR the DTC. TEST the system for normal operation.<br>**No**<br>GO to G6. |
| **G6: CHECK THE ACC MODULE TO FLR SENSOR CAN 'H' CIRCUIT FOR SHORT CIRCUIT TO GROUND** | |
| | 1 Measure the resistance between the ACC module connector IP78, pin 03 (R) and GROUND. |
| | Is the resistance less than 10,000 ohms?<br>**Yes**<br>REPAIR the short circuit. For additional information, refer to the wiring diagrams. CLEAR the DTC. TEST the system for normal operation.<br>**No** |

GETtheMANUALS.org

| | |
|---|---|
| | INSTALL a new FLR sensor.<br>REFER to: Speed Control Sensor (310-03 Speed Control, Removal and Installation).<br>CLEAR the DTC. TEST the system for normal operation. If the DTC is repeated, INSTALL a new ACC control module, not the forward looking sensor.<br>REFER to: Speed Control Module (310-03 Speed Control, Removal and Installation). |

## PINPOINT TEST H : ACC SYSTEM VOLTAGE TESTS

CAUTION: When probing connectors to take measurements in the course of the pinpoint tests, use the adaptor kit, part number 3548-1358-00.

• NOTE: When performing electrical voltage or resistance tests, always use a digital multimeter (DMM) accurate to 3 decimal places, and with an up-to-date calibration certificate. When testing resistance, always take the resistance of the DMM leads into account.

| TEST CONDITIONS | DETAILS/RESULTS/ACTIONS |
|---|---|
| **H1: CHECK THE IGNITION SUPPLY TO THE ACC MODULE** | |
| | 1 Disconnect the battery negative terminal. |
| | 2 Disconnect the ACC module connector IP78. |
| | 3 Reconnect the battery negative terminal. |
| | 4 Turn the ignition switch to the **ON** position. |
| | 5 Measure the voltage between the ACC connector IP78, pin 14 (WG) and GROUND. |
| | Is the voltage less than 10 volts?<br>**Yes**<br>REPAIR the circuit between the ACC connector IP78, pin 14 (WG) and battery. This circuit includes the passenger junction fuse box, (fuse 02). For additional information, refer to the wiring diagrams. TEST the system for normal operation.<br>**No**<br>GO to H2. |
| **H2: CHECK THE BATTERY SUPPLY TO THE ACC MODULE** | |
| | 1 Measure the voltage between the ACC connector IP78, pin 15 (NW) and GROUND. |
| | Is the voltage less than 10 volts?<br>**Yes**<br>REPAIR the circuit between the ACC module connector IP78, pin 15 (NW) and battery. This circuit includes the passenger junction fuse box, (fuse 27 and the switched system power relay). For additional information, refer to the wiring diagrams. TEST the system for normal operation.<br>**No**<br>GO to H3. |
| **H3: CHECK THE GROUND TO THE ACC MODULE** | |
| | 1 Turn the ignition switch to the **OFF** position. |
| | 2 Disconnect the battery negative terminal. |
| | 3 Measure the resistance between the ACC connector IP78, pin 12 (B) and GROUND. |
| | Is the resistance greater than 5 ohms?<br>**Yes**<br>REPAIR the circuit between the ACC module connector IP78, pin 12 (B) and ground connection G31AL. Check the ground connection for contamination and security. For additional information, refer to the wiring diagrams. TEST the system for normal operation.<br>**No**<br>GO to H4. |
| **H4: CHECK THE IGNITION SUPPLY TO THE FLR SENSOR** | |
| | 1 Disconnect the FLR sensor connector EC23. |
| | 2 Reconnect the battery negative terminal. |
| | 3 Turn the ignition switch to the **ON** position. |
| | 4 Measure the voltage between the FLR sensor connector EC23, pin 01 (WG) and GROUND. |
| | Is the voltage less than 10 volts?<br>**Yes**<br>REPAIR the circuit between the FLR connector EC23, pin 01 (WG) and battery. For additional information, refer to the wiring diagrams. TEST the system for normal operation.<br>**No**<br>GO to H5. |
| **H5: CHECK THE BATTERY SUPPLY TO THE FLR SENSOR** | |
| | 1 Measure the voltage between the FLR sensor connector EC23, pin 05 (NW) and GROUND. |
| | Is the voltage less than 10 volts?<br>**Yes**<br>REPAIR the circuit between the FLR sensor connector EC23, pin 05 (NW) and battery. For additional information, refer to the wiring diagrams. TEST the system for normal operation.<br>**No**<br>GO to H6. |
| **H6: CHECK THE GROUND TO THE FLR SENSOR** | |
| | 1 Turn the ignition switch to the **OFF** position. |
| | 2 Measure the resistance between the FLR sensor connector EC23, pin 02 (B) and GROUND. |
| | Is the resistance greater than 5 ohms?<br>**Yes**<br>REPAIR the circuit between the FLR sensor connector EC23, pin 02 (B) and ground connection G01AL. Check ground connection for contamination and security. For additional information, refer to the wiring diagrams. TEST the system for normal operation.<br>**No**<br>No fault is indicated with the ACC system supply voltages or grounds. To continue the diagnostics, return to the Symptom Chart. |

## PINPOINT TEST I : SPEED CONTROL SWITCH CIRCUIT TESTS

WARNING: To avoid accidental deployment and possible personal injury, the back-up power supply must be depleted before repairing or replacing any air bag supplemental restraint system (SRS) components. To deplete the back-up power supply energy, disconnect the battery GROUND cable and wait one minute. Failure to follow this instruction may result in personal injury.

CAUTION: When probing connectors to take measurements in the course of the pinpoint tests, use the adaptor kit, part number 3548-1358-00.

GETtheMANUALS.org

• NOTE: When performing electrical voltage or resistance tests, always use a digital multimeter (DMM) accurate to 3 decimal places, and with an up-to-date calibration certificate. When testing resistance, always take the resistance of the DMM leads into account.

| TEST CONDITIONS | DETAILS/RESULTS/ACTIONS |
|---|---|
| **I1: CHECK THE STEERING WHEEL SPEED CONTROL SWITCH CIRCUIT FOR OPEN CIRCUIT** | |
| | 1 Disconnect the battery negative terminal. |
| | 2 Wait one minute for the system to become safe. |
| | 3 Disconnect the ECM connector PI01. |
| | 4 Measure the resistance between the ECM connector PI01, pin 47 (WG) and ECM connector PI01, pin 48 (YG). |
| | Is the resistance 4310 ohms?<br>**Yes**<br>GO to I2.<br>**No**<br>GO to I8. |
| **I2: CHECK THE STEERING WHEEL SPEED CONTROL RESUME SWITCH CIRCUIT** | |
| | 1 Measure the resistance between the ECM connector PI01, pin 47 (WG) and ECM connector PI01, pin 48 (YG). |
| | 2 Operate the **RESUME** switch. |
| | Does the resistance switch between 4,310 ohms and 2,110 ohms when the switch is operated?<br>**Yes**<br>GO to I3.<br>**No**<br>INSTALL a new speed control switch assembly.<br>REFER to: Speed Control Switch (310-03 Speed Control, Removal and Installation).<br>TEST the system for normal operation. |
| **I3: CHECK THE STEERING WHEEL SPEED CONTROL SET+ SWITCH CIRCUIT** | |
| | 1 Measure the resistance between the ECM connector PI01, pin 47 (WG) and ECM connector PI01, pin 48 (YG). |
| | 2 Operate the **SET+** switch. |
| | Does the resistance switch between 4,310 ohms and 1,110 ohms when the switch is operated?<br>**Yes**<br>GO to I4.<br>**No**<br>INSTALL a new speed control switch assembly.<br>REFER to: Speed Control Switch (310-03 Speed Control, Removal and Installation).<br>TEST the system for normal operation. |
| **I4: CHECK THE STEERING WHEEL SPEED CONTROL HEADWAY- SWITCH CIRCUIT** | |
| | 1 Measure the resistance between the ECM connector PI01, pin 47 (WG) and ECM connector PI01, pin 48 (YG). |
| | 2 Operate the **HEADWAY-** switch. |
| | Does the resistance switch between 4,310 ohms and 600 ohms when the switch is operated?<br>**Yes**<br>GO to I5.<br>**No**<br>INSTALL a new speed control switch assembly.<br>REFER to: Speed Control Switch (310-03 Speed Control, Removal and Installation).<br>TEST the system for normal operation. |
| **I5: CHECK THE STEERING WHEEL SPEED CONTROL HEADWAY+ SWITCH CIRCUIT** | |
| | 1 Measure the resistance between the ECM connector PI01, pin 47 (WG) and ECM connector PI01, pin 48 (YG). |
| | 2 Operate the **HEADWAY+** switch. |
| | Does the resistance switch between 4,310 ohms and 300 ohms when the switch is operated?<br>**Yes**<br>GO to I6.<br>**No**<br>INSTALL a new speed control switch assembly.<br>REFER to: Speed Control Switch (310-03 Speed Control, Removal and Installation).<br>TEST the system for normal operation. |
| **I6: CHECK THE STEERING WHEEL SPEED CONTROL SET- SWITCH CIRCUIT** | |
| | 1 Measure the resistance between the ECM connector PI01, pin 47 (WG) and ECM connector PI01, pin 48 (YG). |
| | 2 Operate the **SET-** switch. |
| | Does the resistance switch between 4,310 ohms and 120 ohms when the switch is operated?<br>**Yes**<br>GO to I7.<br>**No**<br>INSTALL a new speed control switch assembly.<br>REFER to: Speed Control Switch (310-03 Speed Control, Removal and Installation).<br>TEST the system for normal operation. |
| **I7: CHECK THE STEERING WHEEL SPEED CONTROL CANCEL SWITCH CIRCUIT** | |
| | 1 Measure the resistance between the ECM connector PI01, pin 47 (WG) and ECM connector PI01, pin 48 (YG). |
| | 2 Operate the **CANCEL** switch. |
| | Does the resistance switch between 4,310 ohms and zero ohms when the switch is operated?<br>**Yes**<br>No fault is indicated with the steering wheel speed control switches or circuit. To continue the diagnostics, return to the Symptom Chart.<br>**No**<br>INSTALL a new speed control switch assembly.<br>REFER to: Speed Control Switch (310-03 Speed Control, Removal and Installation).<br>TEST the system for normal operation. |
| **I8: CHECK THE STEERING WHEEL SPEED CONTROL SWITCH CIRCUIT FOR OPEN CIRCUIT** | |
| | 1 Disconnect the clockspring connector SW08. |
| | 2 Measure the resistance between the clockspring connector SW08, pin 08, component side and clockspring connector SW08, pin 06, component side. |
| | Is the resistance 4,310 ohms?<br>**Yes**<br>GO to I10.<br>**No**<br>GO to I9. |
| **I9: CHECK THE STEERING WHEEL SPEED CONTROL SWITCH FOR OPEN CIRCUIT** | |
| | 1 Disconnect the steering wheel speed control switch. |

GETtheMANUALS.org

| | |
|---|---|
| | 2 Measure the resistance between the steering wheel speed control switch connector pins 01 and 02 component side. |
| | Is the resistance 4,310 ohms?<br>**Yes**<br>INSTALL a new clockspring. TEST the system for normal operation.<br>**No**<br>INSTALL a new speed control switch assembly.<br>REFER to: Speed Control Switch (310-03 Speed Control, Removal and Installation).<br>TEST the system for normal operation. |
| **I10: CHECK THE STEERING WHEEL SPEED CONTROL SWITCH CIRCUIT FOR OPEN CIRCUIT** | |
| | 1 Measure the resistance between the ECM connector PI01, pin 47 (WG) and clockspring connector SW08, pin 08 (YR). |
| | Is the resistance greater than 5 ohms?<br>**Yes**<br>REPAIR the circuit between ECM connector PI01, pin 47 (WG) and clockspring connector SW08, pin 08 (YR). For additional information, refer to the wiring diagrams. TEST the system for normal operation.<br>**No**<br>GO to I11. |
| **I11: CHECK THE STEERING WHEEL SPEED CONTROL SWITCH CIRCUIT FOR OPEN CIRCUIT** | |
| | 1 Measure the resistance between the ECM connector PI01, pin 48 (YG) and clockspring connector SW08, pin 06 (YG). |
| | Is the resistance greater than 5 ohms?<br>**Yes**<br>REPAIR the circuit between ECM connector PI01, pin 48 (YG) and clockspring connector SW08, pin 06 (YG). For additional information, refer to the wiring diagrams. TEST the system for normal operation.<br>**No**<br>INSTALL a new speed control switch assembly.<br>REFER to: Speed Control Switch (310-03 Speed Control, Removal and Installation).<br>TEST the system for normal operation. |

## PINPOINT TEST J : BRAKE CANCEL SWITCH CIRCUIT TEST

CAUTION: When probing connectors to take measurements in the course of the pinpoint tests, use the adaptor kit, part number 3548-1358-00.

• NOTE: When performing electrical voltage or resistance tests, always use a digital multimeter (DMM) accurate to 3 decimal places, and with an up-to-date calibration certificate. When testing resistance, always take the resistance of the DMM leads into account.

| TEST CONDITIONS | DETAILS/RESULTS/ACTIONS |
|---|---|
| **J1: CHECK THE BRAKE CANCEL SWITCH CIRCUIT FOR OPEN** | |
| | 1 Disconnect the battery negative terminal. |
| | 2 Disconnect the ECM connector PI01. |
| | 3 Reconnect the battery negative terminal. |
| | 4 Turn the ignition switch to the **ON** position. |
| | 5 Measure the voltage between the ECM connector PI01, pin 09 (U) and GROUND. |
| | Is the voltage less than 12 volts?<br>**Yes**<br>GO to J3.<br>**No**<br>GO to J2. |
| **J2: CHECK THE BRAKE CANCEL SWITCH FUNCTION** | |
| | 1 Press the **brake** pedal. |
| | Does the voltage drop to zero with the brake pedal pressed?<br>**Yes**<br>No fault is indicated with the brake cancel switch or circuit. To continue the diagnostics, return to the Symptom Chart.<br>**No**<br>INSTALL a new brake cancel switch.<br>REFER to: Speed Control Deactivator Switch (310-03 Speed Control, Removal and Installation).<br>TEST the system for normal operation. |
| **J3: CHECK THE VOLTAGE TO THE BRAKE CANCEL SWITCH** | |
| | 1 Disconnect the brake cancel switch connector SW08. |
| | 2 Measure the voltage between the brake cancel connector SW08, pin 01 (WG) and GROUND. |
| | Is the voltage less than 10 volts?<br>**Yes**<br>REPAIR the circuit between the brake cancel switch connector SW08, pin 01 (WG) and splice ECS12. For additional information, refer to the wiring diagrams. TEST the system for normal operation.<br>**No**<br>GO to J4. |
| **J4: CHECK THE BRAKE CANCEL SWITCH CIRCUIT FOR OPEN CIRCUIT** | |
| | 1 Turn the ignition switch to the **OFF** position. |
| | 2 Measure the resistance between the ECM connector PI01, pin 09 (U) and brake cancel switch connector CR77, pin 02 (U). |
| | Is the resistance greater than 5 ohms?<br>**Yes**<br>REPAIR the circuit between the ECM connector PI01, pin 09 (U) and the brake cancel switch connector CR77, pin 02 (U). For additional information, refer to the wiring diagrams. TEST the system for normal operation.<br>**No**<br>INSTALL a new brake cancel switch.<br>REFER to: Speed Control Deactivator Switch (310-03 Speed Control, Removal and Installation).<br>TEST the system for normal operation. |

GETtheMANUALS.org

# Speed Control - Speed Control Module Alignment

General Procedures

| Special Tool(s) | |
|---|---|
| E31844 | Inclinometer<br><br>501-F007 |

• NOTE: Make sure the vehicle is positioned on level ground such as the headlamp alignment area.

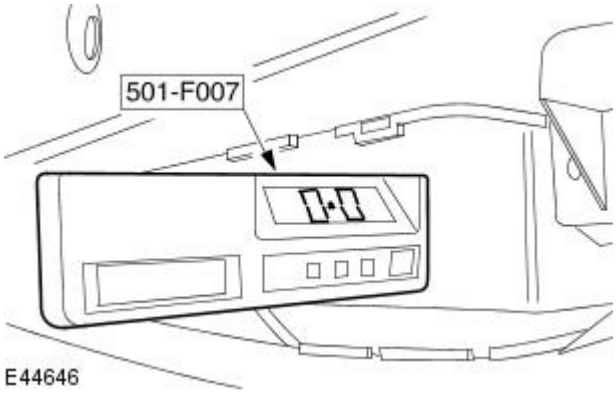


1. Remove the left-hand front bumper access cover.
2. Using the special tool, check the speed control module vertical levelling.

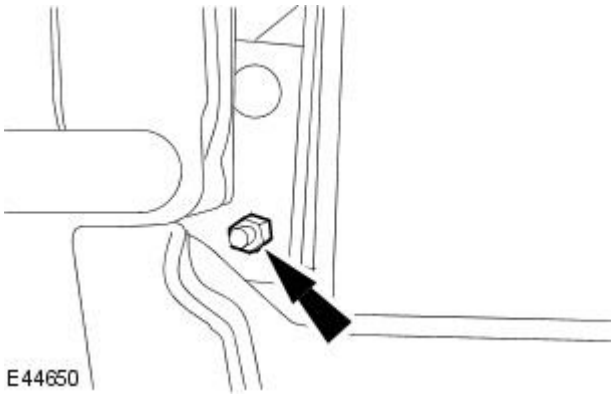


3. Level the speed control module.
   - Rotate the speed control module levelling bolt to achieve a reading of zero degrees ± 0.75°.

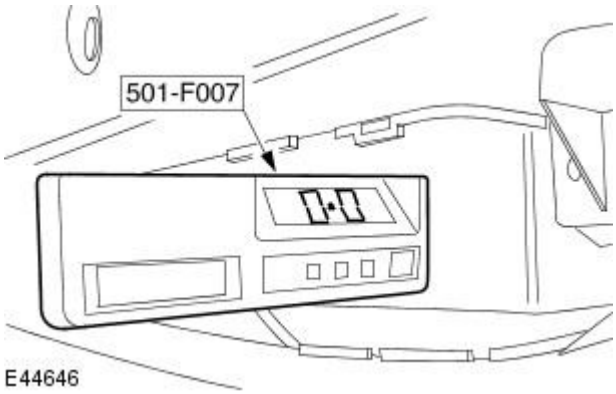


4. Using the special tool, check the speed control module vertical levelling.
5. Install the left-hand front bumper access cover.
6. Carry out the speed control module calibration procedure. For further information, refer to the Jaguar approved diagnostic system.

GETtheMANUALS.org

# Speed Control - Speed Control Deactivator Switch

Removal and Installation

## Removal

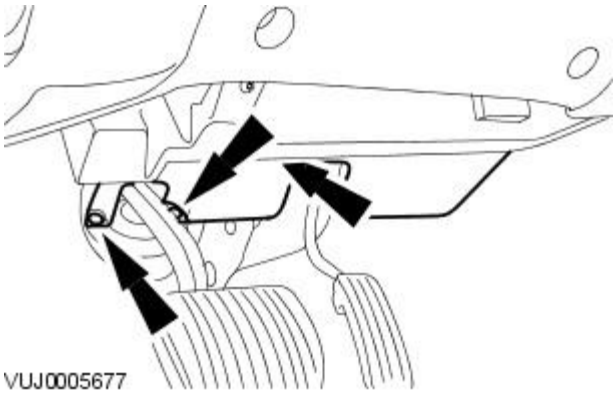


**1.** Remove the driver side instrument panel lower panel.

**2.** Reposition the driver seat to its maximum rearward position.

**3.** Remove the speed control deactivator switch.

1. Disconnect the speed control deactivator switch electrical connector.
2. Remove the speed control deactivator switch.

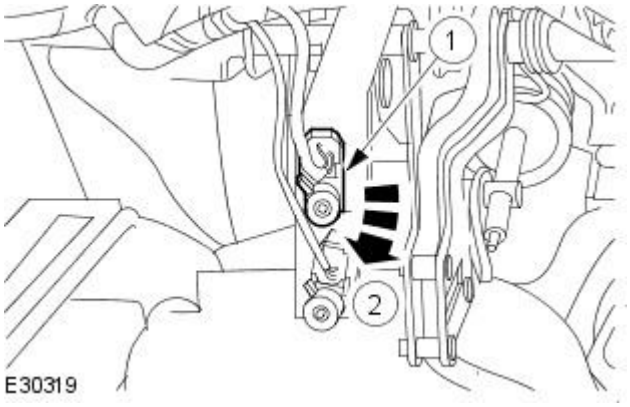


## Installation

**1.** To install, reverse the removal procedure.

- Operate the brake pedal to allow the speed control deactivator switch to remain in the fully extended position during installation.
- Releasing and then pulling back on the pedal untill the pedal reaches the stop in the brake booster, will adjust the speed control de-activator switch plunger to the required setting.

GETtheMANUALS.org

# Speed Control - Speed Control Module

Removal and Installation

## Removal

**1.** CAUTION: Electronic modules are sensitive to static electrical charges. If exposed to these charges, damage may result.

• NOTE: Make sure the audio unit keycode is available before disconnecting the battery ground cable.

Disconnect the battery ground cable.
For additional information, refer to: Battery Disconnect and Connect (414-01 Battery, Mounting and Cables, General Procedures).

**2.** Remove the driver side instrument panel lower trim.

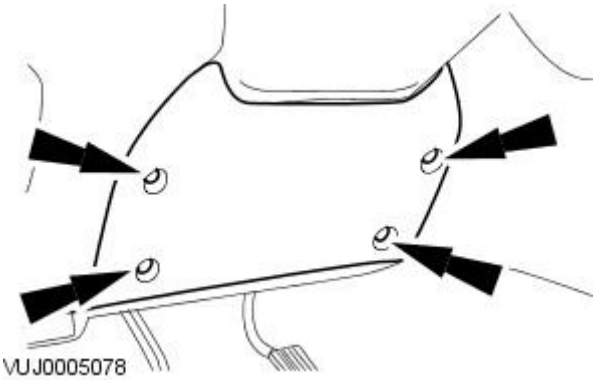


**3.** Disconnect the speed control module electrical connector.

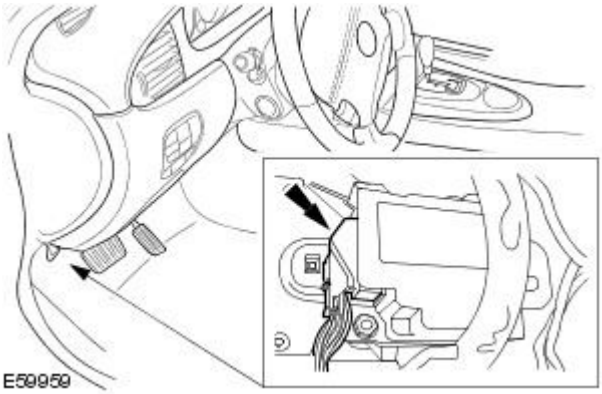


**4.** Remove the speed control module.

- Remove the speed control module retaining nuts.

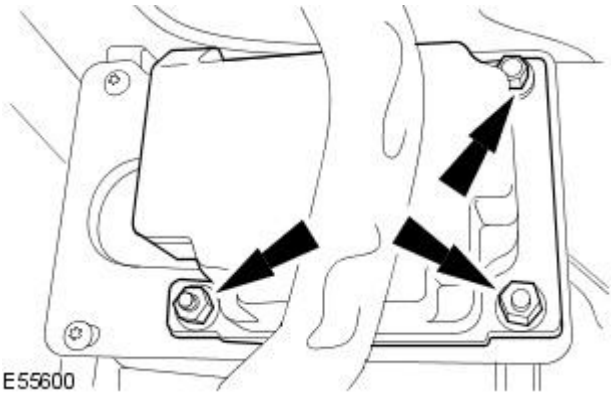


## Installation

**1.** Install the speed control module.

- Tighten to 5 Nm.

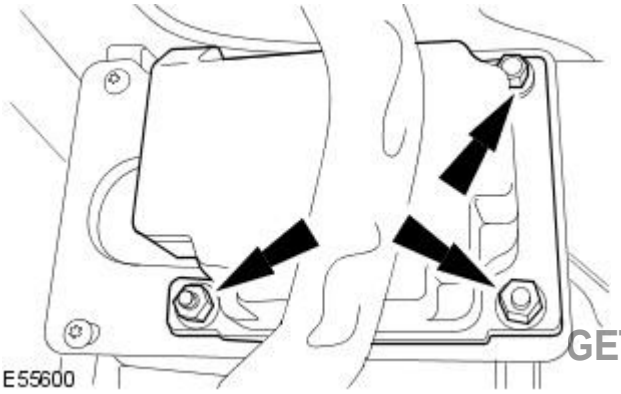


GETtheMANUALS.org

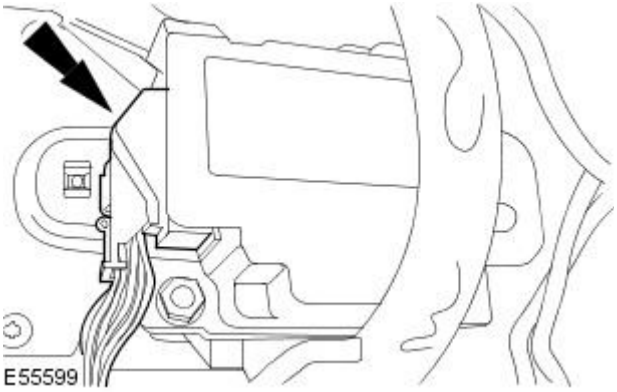


**2.** Connect the speed control module electrical connector.

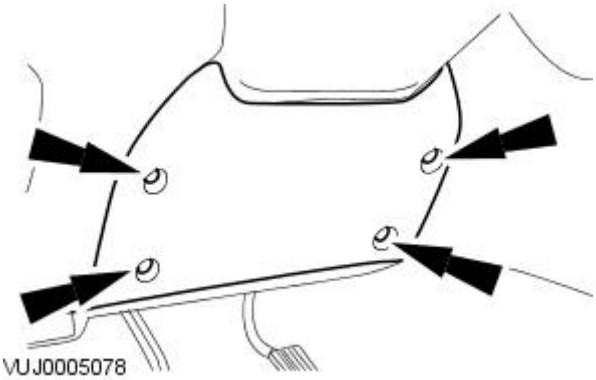


**3.** Install the driver side instrument panel lower trim.

**4.** Connect the battery ground cable.
For additional information, refer to: Battery Connect (414-01 Battery, Mounting and Cables, General Procedures).

**5.** Using the approved Jaguar diagnostic system configure the speed control module.

GETtheMANUALS.org

# Speed Control - Speed Control Sensor

Removal and Installation

## Removal

1. Disconnect the battery ground cable.
   For additional information, refer to: Battery Disconnect and Connect (414-01 Battery, Mounting and Cables, General Procedures).
2. Remove the radiator splash shield.
   For additional information, refer to: Radiator Splash Shield (501-02 Front End Body Panels, Removal and Installation).
3. Disconnect the speed control sensor electrical connector.

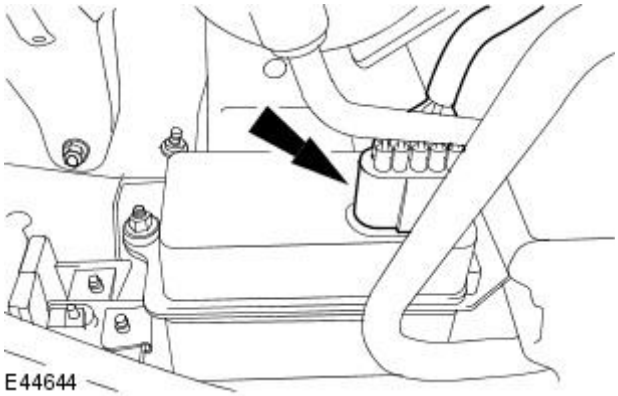

E44644

4. Remove the left-hand front bumper access cover.
5. Remove the speed control sensor.
   - Remove the bolts.

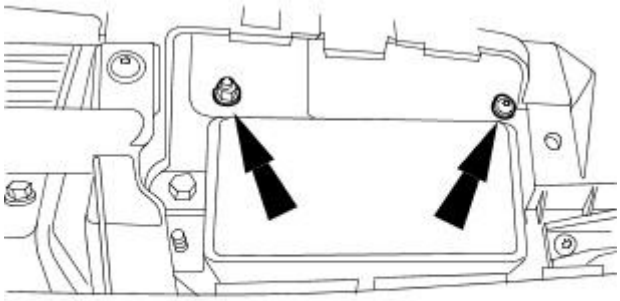

E44645

6. Remove the speed control sensor retaining bracket.
   - Remove the nuts.

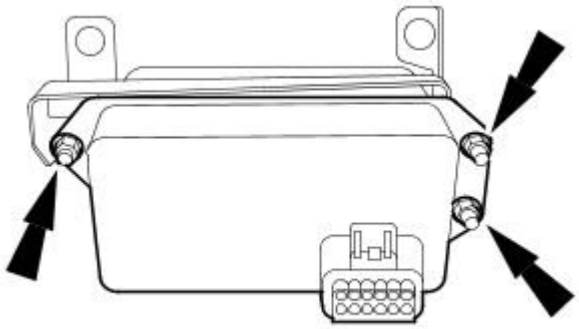

E44649

## Installation

1. Adjust the speed control sensor levelling bolt shoulder to mounting bracket clearance to 4.5 mm.

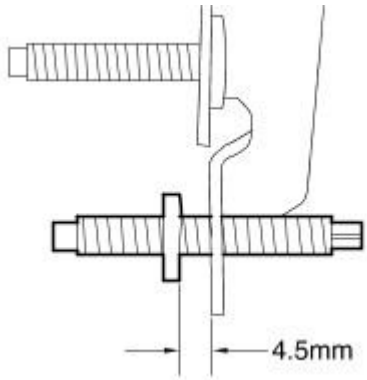


E45021

GETtheMANUALS.org

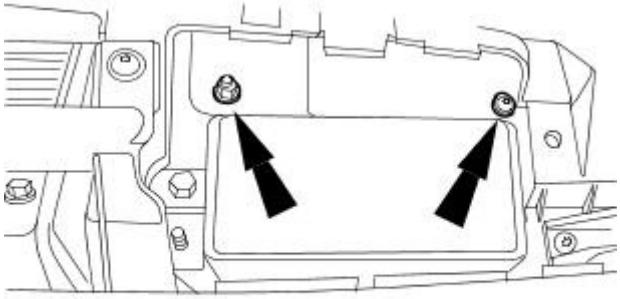

E44645

2. Install the speed control sensor.
   - Tighten to 5 Nm.

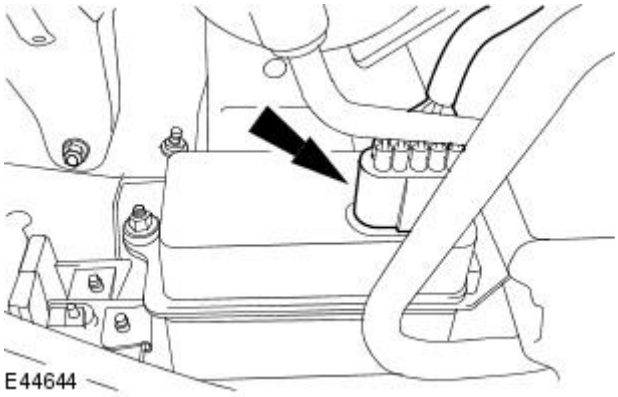

E44644

3. Connect the speed control sensor electrical connector.

4. Install the radiator splash shield.
   For additional information, refer to: Radiator Splash Shield (501-02 Front End Body Panels, Removal and Installation).
5. Connect the battery ground cable.
   For additional information, refer to: Battery Connect (414-01 Battery, Mounting and Cables, General Procedures).
6. Check and adjust the speed control sensor levelling.
   For additional information, refer to: Speed Control Module Alignment (310-03 Speed Control, General Procedures).
7. Install the left-hand front bumper access cover.

GETtheMANUALS.org

# Speed Control - Speed Control Switch

Removal and Installation

## Removal

1. Remove the driver airbag module. For additional information refer to Section 501-20A Safety Belt SystemSection 501-20B Supplemental Restraint System
2. Disconnect the speed control switch electrical connector.

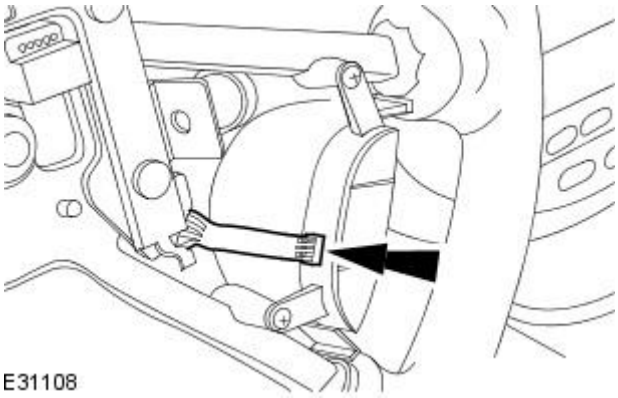


3. Remove the speed control switch

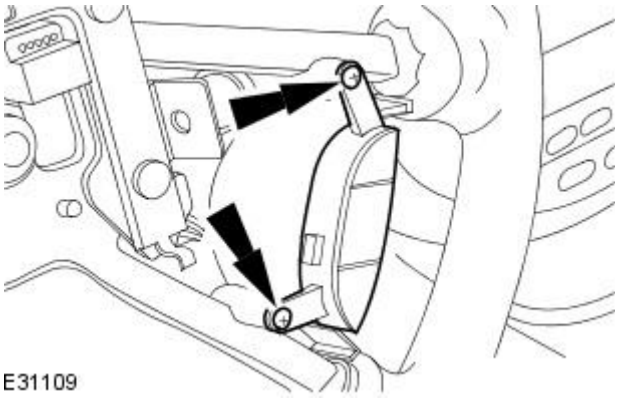


## Installation

1. To install, reverse the removal procedure.
   - Tighten to 2 Nm.

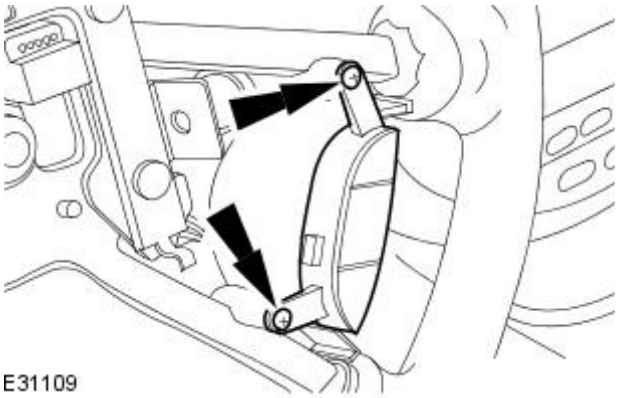


GETtheMANUALS.org

# Climate Control System - General Information -

**Lubricants, Fluids, Sealers and Adhesives**

| Description | Specification |
|---|---|
| Air conditioning refrigerant | HFC 134a |
| Air conditioning compressor oil | WSH M1C231-B |

**Capacities**

| Description | Grammes |
|---|---|
| Air conditioning refrigerant - All except vehicles with diesel engine | 750 |
| Air conditioning refrigerant - Vehicles with diesel engine | 700 |

**Refrigerant Oil Adding Capacities**

| Item | Milliliters |
|---|---|
| Condenser core and desiccant bag | Add 33 |
| Desiccant bag | Add 8 |
| Evaporator | Add 46 |
| Air conditioning (A/C) compressor | Add same quantity as that removed |
| Air conditioning lines - If air conditioning has been operational. | Add 10 per line |

GETtheMANUALS.org

# Climate Control System - General Information - Climate Control System

Description and Operation

The purpose of the air distribution system is to route air to the designated registers. This is accomplished when air enters the plenum and is directed to the desired ducts by the use of air distribution doors.

The air distribution system contains the heater core and evaporator core, blower motor and distribution doors. All of the air is mixed and distributed from the plenum assembly depending on the distribution door positions.

For additional information, refer to: Air Distribution and Filtering (412-01 Air Distribution and Filtering, Description and Operation).

## Heating/Defrosting

The heating system is a water valve controlled system. The ambient air is passed through the cabin air filter, directed through and/or around the heater core and evaporator core, mixed and distributed from the plenum assembly to the floor, panel and/or the defrost ducts as desired.

For additional information, refer to: Heating and Ventilation (412-02A Heating and Ventilation, Description and Operation).

## Auxiliary Heater - Vehicles with Diesel engine

The system consists of a fuel operated heater unit and a fuel dosing pump.

Fuel for the heater system is taken from the vehicle fuel tank, through a line attached to the fuel pump module. Fuel is drawn from the fuel tank by a lift pump and supplied via the dosing pump to the heater unit. In the heater unit, the fuel delivered by the fuel pump is burned and the resultant heat output is used to heat the engine coolant.

An electronic control unit (ECU) integrated into the heater unit controls the operation of the heater unit and the dosing pump. The climate control unit controls the operation of the re-circulation flaps on initial start up.

For additional information, refer to: Auxiliary Heater (412-02B Auxiliary Heating, Description and Operation).

## Heater Core and Evaporator core

The heater core consists of a number of fins and tubes in an arrangement to extract heat from the engine coolant and transfer the heat to the air that passes through the heater core. The evaporator core is a plate/fin type arrangement.

For additional information, refer to: Air Conditioning (412-03 Air Conditioning, Description and Operation).

## Air Conditioning Line Peanut Fitting

Peanut Fitting Assembly

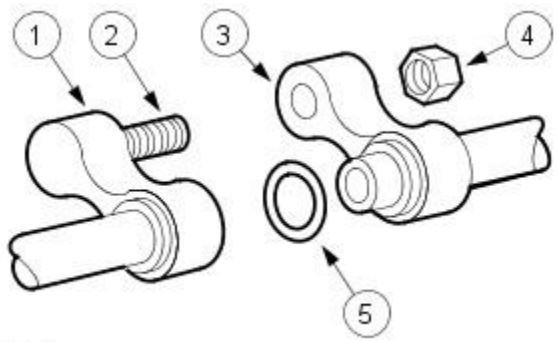


E30131

| Item | Part Number | Description |
|---|---|---|
| 1 | - | Female air conditioning line. |
| 2 | - | Stud. |
| 3 | - | Male air conditioning line. |
| 4 | - | Retaining nut. |
| 5 | - | O-ring seal. |

The connections between the air conditioning (A/C) condensor core/receiver drier and the connections between the lines use peanut fittings.

- The male and female line of the peanut fitting are retained with a nut.
- An O-ring seal is installed around the tube on the male line.
- The female line is welded to the tube and is not adjustable.
- Support the female line with a wrench to prevent the twisting of the tubes.
- The male line will pivot around the tube to allow for alignment with the female line during assembly.
- When correctly assembled, the mating surfaces of the male and female fittings should be flush.

## Blower motor

The brushless blower motor pulls air from the air inlet and forces it into the plenum assembly where it is mixed and distributed. The blower motor has seven speeds (vehicles with telematics have eleven speeds) and is controlled by the climate control assembly.

## Air conditioning refrigerant

The R-134a air conditioning system uses a hydrofluorocarbon (HFC) non-CFC based refrigerant. R-134a requires the use of Jaguar compressor oil or equivalent meeting Jaguar specification. Do not use R-12 tools and equipment when repairing an R-134a system unless specified in the workshop manual. Never mix R-12 and R-134a refrigerants and oils. They are not compatible.

## Air Conditioning (A/C) System

GETtheMANUALS.org

The air conditioning (A/C) system is a multi-piece, single case design, with an integral blower motor. The system allows the operator to

control the temperature by delivering heated or cooled air to maintain a constant temperature. In addition, during A/C operation, it reduces the relative humidity of air inside the vehicle. Controls are provided to adjust the temperature and system functions, including blower motor speeds for desired airflow. Ambient air is passed through during all system operations except for MAX A/C cooling (when recirculated air is used) and OFF.

For additional information, refer to: Air Conditioning (412-03 Air Conditioning, Description and Operation).

## Control System Inputs

The climate control system inputs can be selected from the climate control assembly which offers either AUTO or manual control (MODE).

## Control System Outputs

The air inlet, air distribution and air temperature blend doors are all controlled by electronic actuators.

For additional information, refer to: Control Components (412-04 Control Components, Description and Operation).

GETtheMANUALS.org

# Climate Control System - General Information - Climate Control System

Diagnosis and Testing

• NOTE: All air conditioning (A/C) related tests should be run in an ambient temperature of at least 10°C (50°F).

1. **1.** Verify the customer concern by operating the system.
2. **2.** Visually inspect for obvious signs of mechanical or electrical damage.
3. **3.** Listen for any unusual noises during climate control system operation.
4. **4.** Inspect the air conditioning (A/C) system with an ultraviolet (UV) lamp for traces of UV sensitive leak trace dye.

**Visual Inspection Chart**

| Mechanical | Electrical |
|---|---|
| • Coolant level<br>• Refrigerant (UV lamp)<br>• Drive belt<br>• Control flap(s)<br>• Duct(s)<br>• Register(s)<br>• Cabin air filter<br>• Hose(s)<br>• Dual coolant flow valve<br>• Auxillary coolant flow pump (vehicles fitted with 4.2L engine)<br>• Water pump | • Fuse(s)<br>• Circuit<br>• Blower motor<br>• Electrical connector(s)<br>• Compressor<br>• Cooling fan<br>• Actuators<br>• Climate control assembly<br>• Dual coolant flow valve<br>• Auxillary coolant flow pump (vehicles fitted with 4.2L engine) |

5. **5.** If an obvious cause for an observed or reported concern is found, correct the cause (if possible) before proceeding to the next step.
6. **6.** If the cause is not visually evident, verify the symptom and refer to the Jaguar Approved Diagnostic System.

GETtheMANUALS.org

# Climate Control System - General Information - Air Conditioning (A/C) System Flushing

General Procedures

**1.** WARNINGS:

Use extreme care and observe all safety precautions related to the use of refrigerants. Due to refrigerant hazards, always wear safety goggles and non-penetrable gloves when working on or flushing air conditioning (A/C) systems. Failure to follow this instruction may result in personal injury.

When flushing the A/C system, refer to the manufacturers equipment instructions for additional information. Failure to do so may result in system damage or personal injury.

The A/C refrigerant analyzer must be used before the recovery of any vehicle's A/C refrigerant. Failure to do so puts shop bulk refrigerant at risk of contamination. If the vehicle A/C refrigerant is contaminated, refer the customer to return to the repair facility that performed the last A/C repair. If the customer wishes to pay the additional cost, use the A/C recovery equipment that is designated for recovering contaminated A/C refrigerant. All contaminated A/C refrigerant must be disposed of as hazardous waste. For additional information, refer to the manufacturers equipment instructions. Failure to follow this instruction may result in personal injury.

Prior to using the A/C flushing equipment for the first time, follow the operating instructions. Failure to follow this instruction may result in personal injury.

CAUTION: Prior to flushing, remove and discard the desiccant sack. Depending on the equipment used, other A/C components may have to be removed prior to flushing. For additional information, refer to the manufacturers equipment instructions before flushing the A/C system.

Recover the refrigerant.
For additional information, refer to Air conditioning (A/C) System Recovery, Evacuation and Charging in this section.

**2.** Remove the desiccant sack.
For additional information, refer to Section 412-03 Air Conditioning.

**3.** Flush the system. For additional information, refer to the manufacturers equipment instructions.

**4.** Install new refrigerant lines if blocked with debris.

**5.** Install a new desiccant sack.
For additional information, refer to Section 412-03 Air Conditioning.

**6.** Add the required amount of oil to the A/C system depending on the repair procedure.
For additional information, refer to Refrigerant Oil Adding in this section.

**7.** Evacuate and charge the A/C system.
For additional information, refer to Air conditioning (A/C) System Recovery, Evacuation and Charging in this section.

**8.** Carry out fluorescent dye leak detection test.
For additional information, refer to Flourescent Dye Leak Detection in this section.

**9.** Check the A/C system for correct operation.

GETtheMANUALS.org

# Climate Control System - General Information - Air Conditioning (A/C) System Recovery, Evacuation and Charging

General Procedures

All vehicles

**1.** WARNING: Jaguar Cars Limited. recommend the use of a charging station to carry out recover, evacuation and charging of the refrigerant system. Follow the manufacturers equipment procedures and instructions. Failure to follow this instruction may result in personal injury.

• CAUTIONS:

The air conditioning (A/C) refrigerant analyzer must be used before the recovery of any vehicle's A/C refrigerant. Failure to do so puts shop bulk refrigerant at risk of contamination. If the vehicle A/C refrigerant is contaminated, refer the customer to return to the repair facility that carried out the last A/C repair. If the customer wishes to pay the additional cost, use the A/C recovery equipment that is designated for recovering contaminated A/C refrigerant. All contaminated A/C refrigerant must be disposed of as hazardous waste. For all equipment, follow the manufacturers equipment procedures and instructions. Failure to follow this instruction may result in personal injury.

Do not add R-12 refrigerant to an A/C system that requires the use of R-134a refrigerant. These two types of refrigerant should never be mixed. Doing so may cause damage to the A/C system.

Connect the charging station. For additional information, refer to the manufacturers equipment instructions.

**2.** Recover the refrigerant. For additional information, refer to the manufacturers equipment instructions.

**3.** Carry out the required repair procedure.

**4.** Add the required amount of oil to the A/C system depending on the repair procedure.
For additional information, refer to: Refrigerant Oil Adding (412-00 Climate Control System - General Information, General Procedures).

**5.** Evacuate the A/C system. For additional information, refer to the manufacturers equipment instructions.

**6.** Check the A/C system for a sufficient vacuum. For additional information, refer to the manufacturers equipment instructions.

All except vehicles with diesel engine

**7.** Charge the A/C system with 750 grams of refrigerant.

Vehicles with diesel engine

**8.** Charge the A/C system with 700 grams of refrigerant.

All vehicles

**9.** Check the A/C system for correct operation.

**10.** Carry out flourescent dye leak detection test.
For additional information, refer to: Fluorescent Dye Leak Detection (412-00 Climate Control System - General Information, General Procedures).

GETtheMANUALS.org

# Climate Control System - General Information - Contaminated Refrigerant Handling

General Procedures

**1.** If contaminated refrigerant is detected DO NOT recover the refrigerant into your R-134a OR R-12 recovery/recycling equipment. Take the follow actions:

1. Repeat the test to verify contaminated refrigerant is present.
2. Advise the customer of the contaminated A/C system and any additional cost to repair the system. The customer may wish to return to the repair facility performing the last A/C repair.
3. Recover the contaminated refrigerant using suitable recovery only equipment designed for capturing and storing contaminated refrigerant. This equipment must only be used to recover contaminated refrigerant to prevent the spread to other vehicles. As an alternative, contact an A/C repair facility in your area with the proper equipment to perform the repair.
4. On completion of the recovery of the contaminated refrigerant, it will be necessary to carry out the A/C system flushing procedure.
   For additional information, refer to Air Conditioning (AC) System Flushing in this section.

GETtheMANUALS.org

# Climate Control System - General Information - Electronic Leak Detection

General Procedures

**1.** WARNING: Good ventilation is necessary in the area where A/C leak testing is to be carried out. If the surrounding air is contaminated with refrigerant gas, the leak detector will indicate this gas all the time. Odors from other chemicals such as antifreeze, diesel fuel, disc brake cleaner, or other cleaning solvents can cause the same problem. A fan, even in a well ventilated area, is very helpful in removing small traces of contamination from the air that might affect the leak detector. Failure to follow this instruction may result in personal injury.

Attach an R-134a manifold gauge set or use a UL-approved recovery/recycling device such as an R-134a A/C refrigerant center (which meets SAE Standard J 1991). For additional information, refer to the manufacturers equipment instructions.

- Both gauges should indicate 413-551 kPa (60-80 psi) at 24°C (75°F) with the engine off.
- If little or no pressure is indicated, carry out the air conditioning (A/C) system recovery, evacuation and charging procedure.
  For additional information, refer to Air Conditioning (AC) System Recovery, Evacuation and Charging in this section.

**2.** Use an R134-a Automatic calibration halogen leak detector to leak test the refrigerant system. For additional information, refer to the manufacturers equipment instructions.

**3.** If a leak is found, carry out the air conditioning (A/C) system recovery procedure.
For additional information, refer to Air Conditioning (AC) System Recovery, Evacuation and Charging in this section.

GETtheMANUALS.org

# Climate Control System - General Information - Fluorescent Dye Leak Detection

General Procedures

**1.** WARNING: Eye protection glasses supplied with the ultraviolet (UV) lamp should be used to protect eyesight from harm.

• NOTE: The air conditioning (A/C) system has an R-134a leak trace dye wafer incorporated into the desiccant bag. The exact location of leaks can be pinpointed by the bright yellow/green glow of the tracer dye. Since more than one leak may exist, always inspect each component. If it is necessary to add dye (due to a severe leakage for example) use proprietary tracer dye injection equipment.

Check for leaks using ultraviolet (UV) lamp.

**2.** Check all components, fittings and lines of the A/C system.

**3.** Carry out the repair. For additional information, refer to Section 412-03 Air Conditioning.

**4.** After the leak is repaired, remove any traces of leak trace dye with a general purpose oil solvent.

**5.** Check the A/C system for correct operation.

**6.** Verify the repair by operating the system for a short time and inspecting with the (UV) lamp.

GETtheMANUALS.org

# Climate Control System - General Information - Inspection and Assembly Requirements

General Procedures

**1.** Check for leaks using ultraviolet (UV) Lamp.
For additional information, refer to Flourescent Dye Leak Detection in this section.

**2.** NOTE: Any time a hose or component connection leak is observed, the component and fitting must be separated, cleaned and a new O-ring fitted and lubricated with air conditioning compressor oil.
For additional information, refer to Specifications in this section.

• NOTE: When separating A/C joints, cap the open connections immediately. Do not leave open to atmosphere.

O-ring seal surfaces must be free of dirt, lint, burrs and scratches. The O-ring and connector should be lubricated with air conditioning compressor oil.
For additional information, refer to Specifications in this section.

GETtheMANUALS.org

# Climate Control System - General Information - Manifold Gauge Set Connection

General Procedures

**1.** WARNINGS:

Use extreme care and observe all safety precautions related to the use of refrigerants. Failure to follow this instruction may result in personal injury.

For additional information, refer to the manufacturers equipment instructions. Failure to follow this instruction may result in personal injury and system damage.

Install the manifold gauge set. For additional information, refer to the manufacturers equipment instructions.

**2.** Carry out the repair.

**3.** Remove the manifold gauge set. For additional information, refer to the manufacturers equipment instructions.

**4.** Carry out flourescent dye leak detection test.
For additional information, refer to Flourescent Dye Leak Detection in this section.

**5.** Check air conditioning (A/C) system for correct operation.

GETtheMANUALS.org

# Climate Control System - General Information - Refrigerant Oil Adding

General Procedures

• NOTE: When separating air conditioning (A/C) connections, cap the open connections immediately. Do not leave open to the atmosphere.

**1.** A new replacement A/C compressor contains no refrigerant oil.

- When replacing components of the air conditioning refrigerant system, add oil to the replacement components.
  For additional information, refer to Specifications in this section.
- If evidence of a leak is found, source of the leak is to be rectified.

GETtheMANUALS.org

# Climate Control System - General Information - Refrigerant System Tests

General Procedures

**1.** WARNINGS:

Use extreme care and observe all safety precautions related to the use of refrigerants. Failure to follow this instruction may result in personal injury.

The A/C refrigerant analyzer must be used before the recovery of any vehicle's A/C refrigerant. Failure to do so puts shop bulk refrigerant at risk of contamination. If the vehicle A/C refrigerant is contaminated, refer the customer to return to the repair facility that carried out the last A/C repair. If the customer wishes to pay the additional cost, use the A/C recovery equipment that is designated for recovering contaminated A/C refrigerant. All contaminated A/C refrigerant must be disposed of as hazardous waste. For all equipment, follow the equipment manufacturers procedures and instructions. Failure to follow this instruction may result in personal injury.

• NOTE: Jaguar Cars Ltd. supports the efficient usage, recovery and recycling of the refrigerant used in passenger car air conditioners. Jaguar Cars Ltd. recommends the use of UL-approved recovery/recycling device such as R-134a A/C refrigerant center (which meets SAE Standard J 1991) during any A/C system repair and recharge procedure which requires that the system be evacuated.

Use R-134a A/C Refrigerant Centre to evacuate and recover the A/C system.

- Follow the equipment manufactures procedures and instructions for use of equipment.

GETtheMANUALS.org

# Air Distribution and Filtering -

**Torque Specifications**

| Description | Nm | lb-ft | lb-in |
|---|---|---|---|
| Driver side register duct | 3 | - | 27 |
| Passenger side register duct | 3 | - | 27 |
| Front footwell duct LH | 3 | - | 27 |
| Front footwell duct RH | 3 | - | 27 |

GETtheMANUALS.org

# Air Distribution and Filtering - Air Distribution and Filtering

Description and Operation

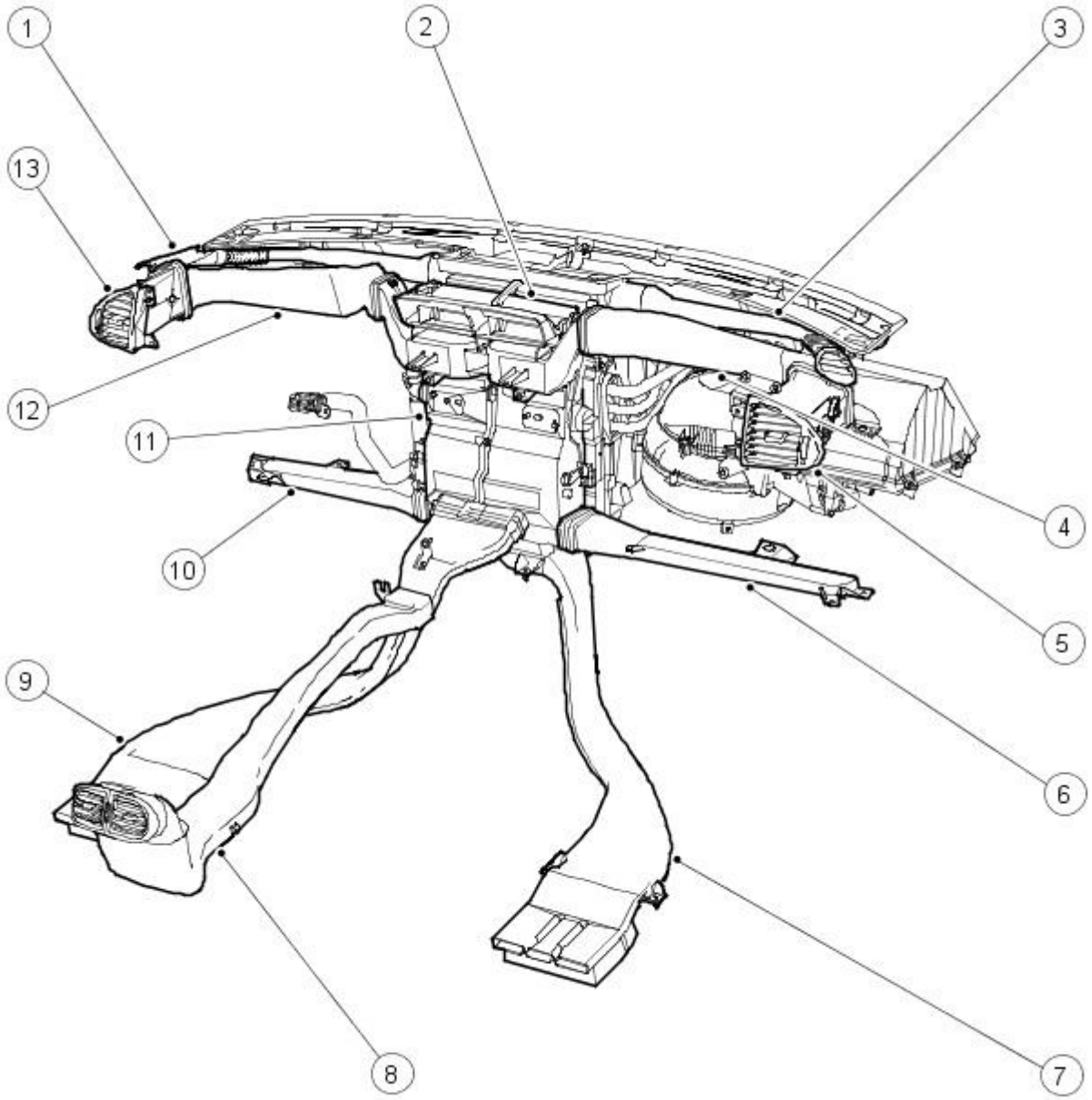


E30315

| Item | Part Number | Description |
|---|---|---|
| 1 | — | Passenger side defrost vent duct |
| 2 | — | Centre register duct |
| 3 | — | Driver side defrost vent duct |
| 4 | — | Driver side register duct |
| 5 | — | Driver side register |
| 6 | — | Front footwell duct RH |
| 7 | — | Rear footwell duct |
| 8 | — | Floor console register duct |
| 9 | — | Rear footwell duct |
| 10 | — | Front footwell duct LH |
| 11 | — | Plenum assembly |
| 12 | — | Passenger side register duct |
| 13 | — | Passenger side register |

The purpose of the air distribution system is to route air to the designated registers . This is accomplished when ambient air enters the plenum through the cabin air filter and is routed to the desired outlets by use of distribution doors.

The cabin air filter is a combination particulate and odour filter.

The air distribution system contains the heater core and evaporator core, blower motor and distribution doors. All of the air is mixed and distributed from the plenum assembly depending on the distribution door positions.

Air ducts direct air to the registers depending on the specific request from the climate control assembly. For additional information, refer to Section 412-04 Control Components

GETtheMANUALS.org

Published: 11-May-2011

# Air Distribution and Filtering - Air Distribution and Filtering

Diagnosis and Testing

For additional information, refer to Section 412-00 Climate Control System - General Information

GETtheMANUALS.org

# Air Distribution and Filtering - Cabin Air Filter

Removal and Installation

## Removal

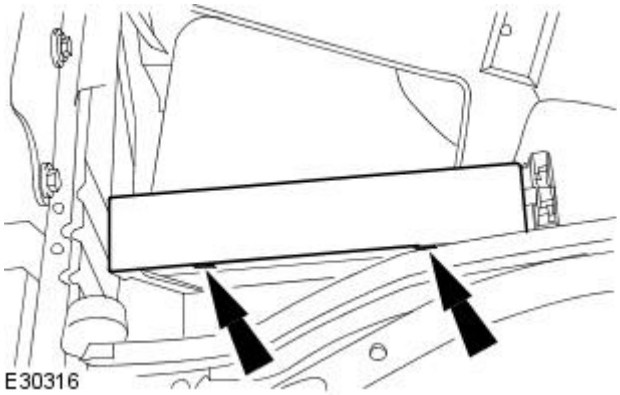


1. Remove the cowl vent screen.
   For additional information, refer to Section 501-02 Front End Body Panels.
2. Open the cabin air filter housing cover.
   - Detach the retaining tangs

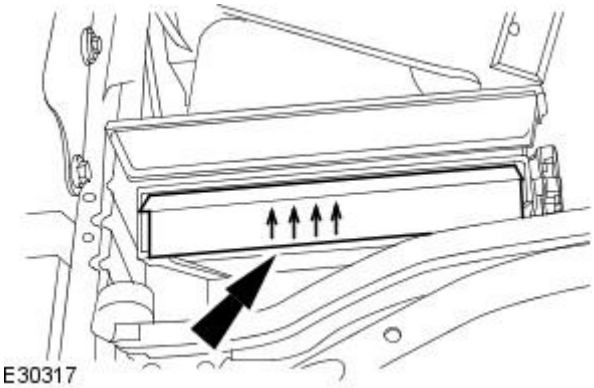


3. Remove the cabin air filter.

## Installation

1. NOTE: Make sure the new cabin air filter is fitted correctly, with the air flow markings on the cabin air filter showing the direction of air flow.

   To install, reverse the removal procedure.

GETtheMANUALS.org

# Air Distribution and Filtering - Center Registers

Removal and Installation

## Removal

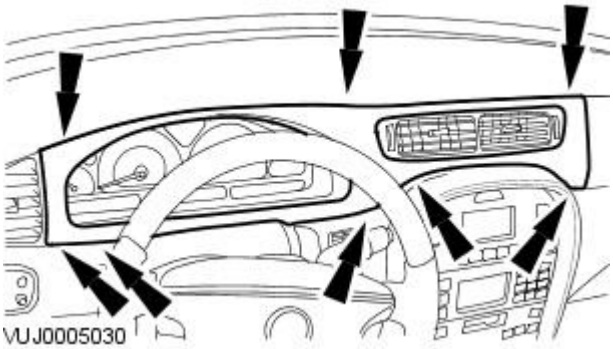


**1.** CAUTION: Make sure damage does not occur to the instrument panel finish panel.

Remove the instrument panel finish panel.

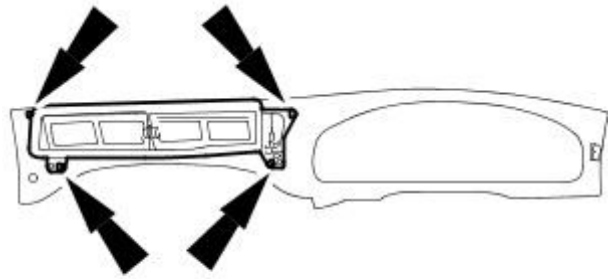


**2.** Remove the center registers.

## Installation

**1.** To install, reverse the removal procedure.

GETtheMANUALS.org

# Air Distribution and Filtering - Driver Side Register

Removal and Installation

## Removal

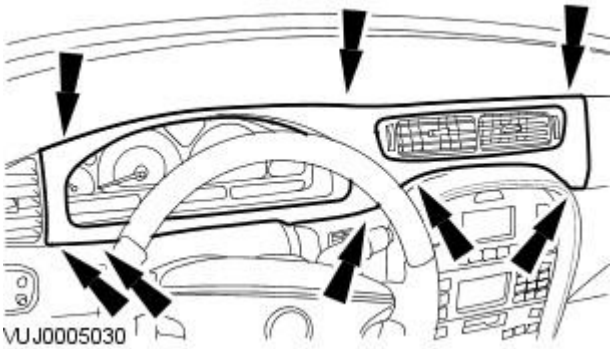


**1.** CAUTION: Make sure damage does not occur to the instrument panel finish panel.

Remove the instrument panel finish panel.

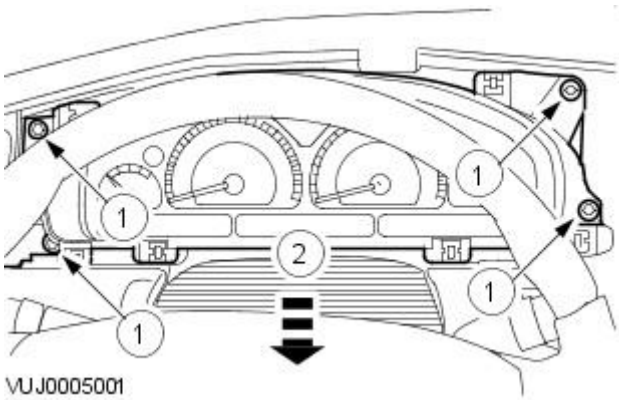


**2.** Remove the instrument cluster finish panel.

1. Remove the retaining screws.
2. Remove the instrument cluster finish panel.

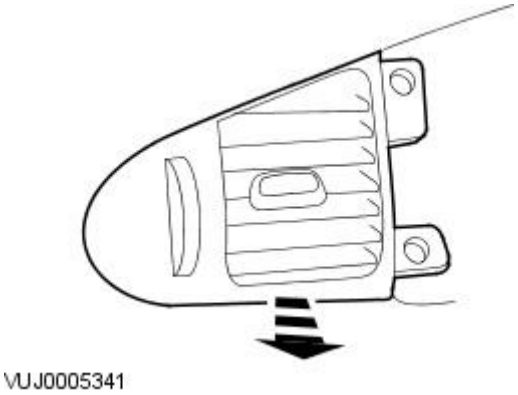


**3.** Remove the driver side register.

## Installation

**1.** To install, reverse the removal procedure.

GETtheMANUALS.org

# Air Distribution and Filtering - Driver Side Register Duct

Removal and Installation

## Removal

1. Lower and extend the steering column to its maximum rearward position.
2. Remove the instrument cluster.
   For additional information, refer to Section 413-01 Instrument Cluster.
3. Remove the driver side register.

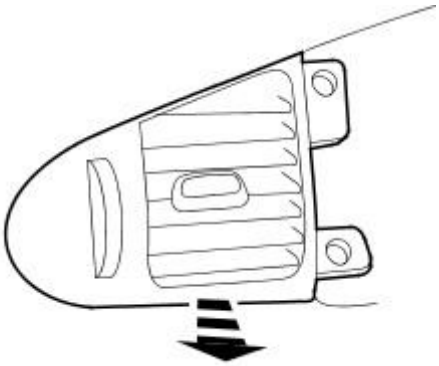

VUJ0005341

4. Remove the driver side register duct retaining screw.

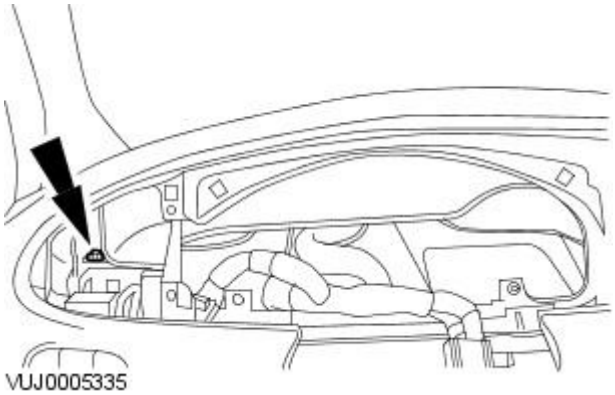

VUJ0005335

5. Detach the driver side register duct.
   1. Release the driver side register duct from the instrument panel.
   2. Detach the driver side register duct.

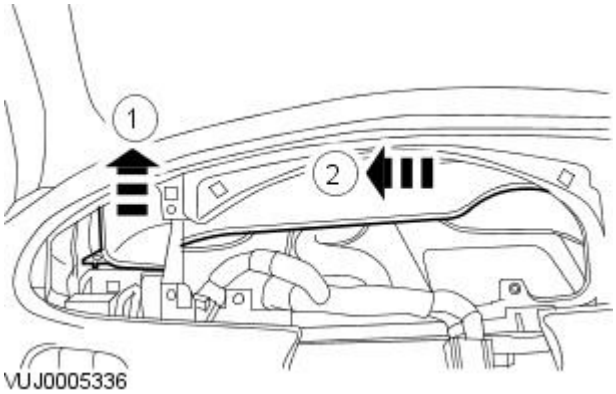


VUJ0005336

6. Remove the driver side register duct.

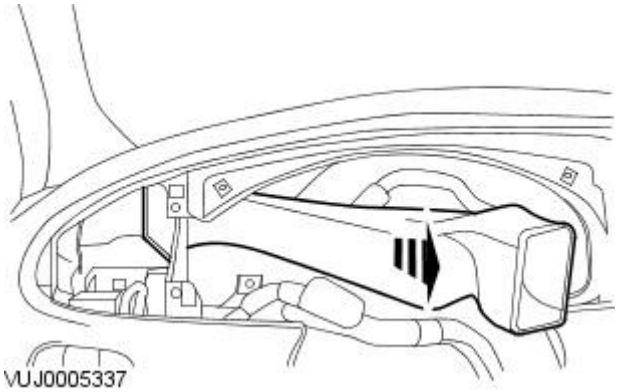

VUJ0005337

## Installation

GETtheMANUALS.org

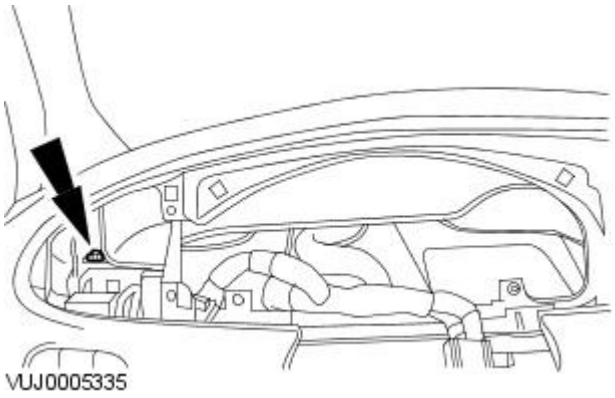


**1.** To install, reverse the removal procedure.

- Tighten to 3Nm.

GETtheMANUALS.org

# Air Distribution and Filtering - Floor Console Register Duct

Removal and Installation

## Removal

1. Remove the floor console.
   For additional information, refer to Section 501-12 Instrument Panel and Console.
2. Release the floor console register duct retaining tangs.

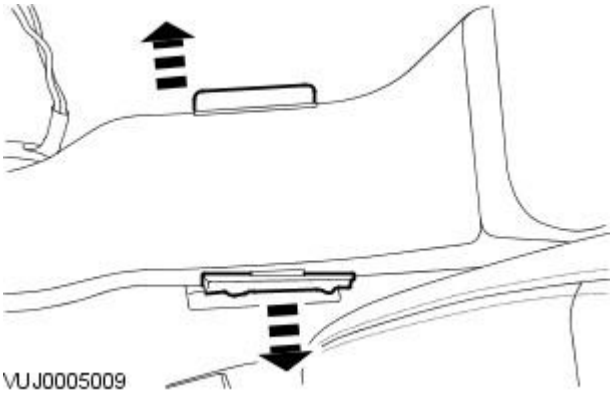


3. Remove the floor console register duct.

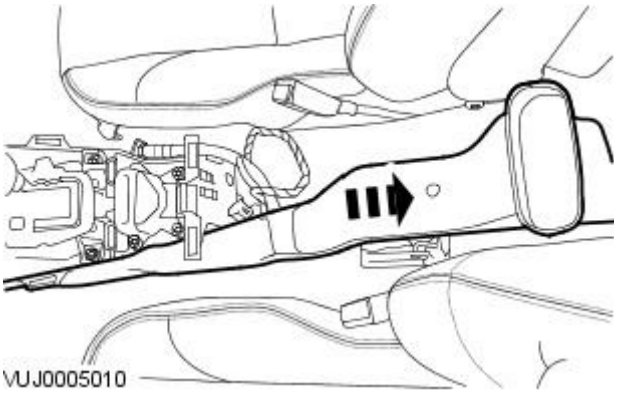


## Installation

1. To install, reverse the removal procedure.

GETtheMANUALS.org

# Air Distribution and Filtering - Front Footwell Duct LH

Removal and Installation

## Removal

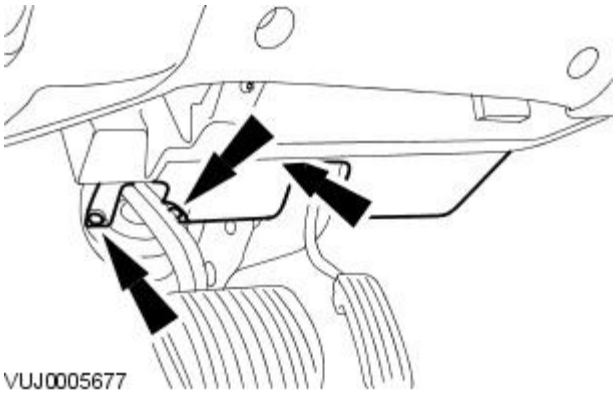


**1.** Remove the driver side instrument panel lower trim panel.

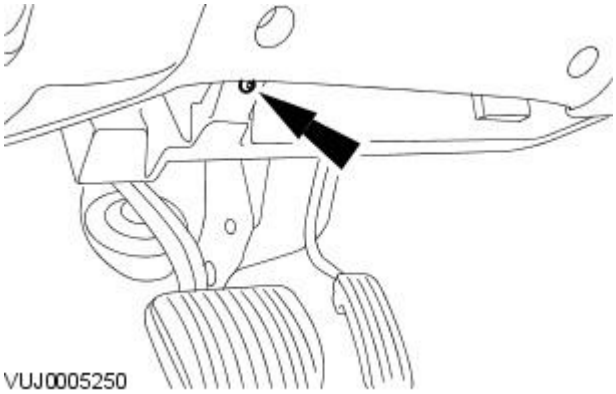


**2.** Remove the front footwell duct left-hand retaining bolt.

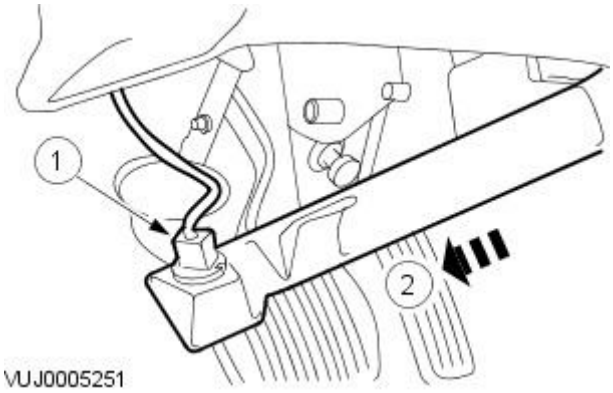


**3.** Remove the front footwell duct left-hand.

1. Detach footwell lamp from the front footwell duct left-hand.
2. Remove the front footwell duct left-hand.

## Installation

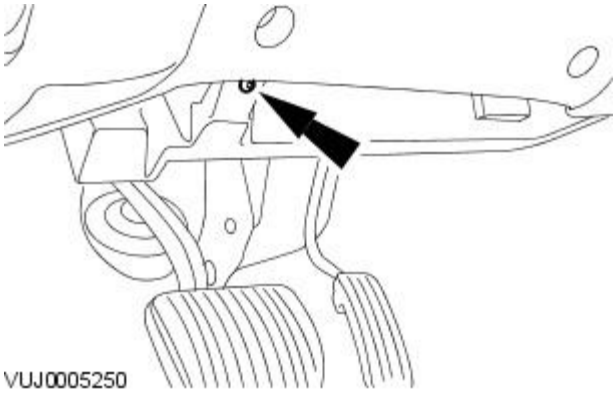


**1.** To install, reverse the removal procedure.

- Tighten to 3Nm.

GETtheMANUALS.org

# Air Distribution and Filtering - Front Footwell Duct RH

Removal and Installation

## Removal

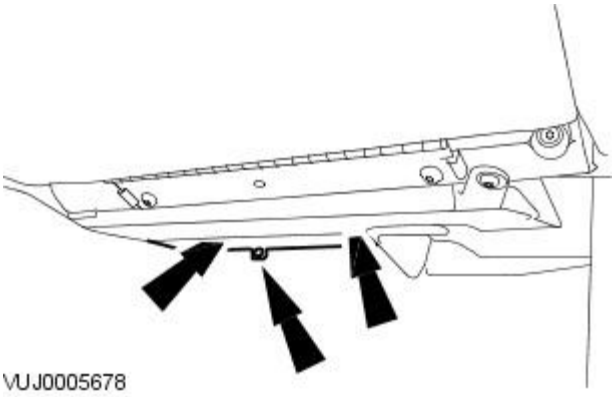


**1.** Remove the passenger side instrument panel lower trim panel.

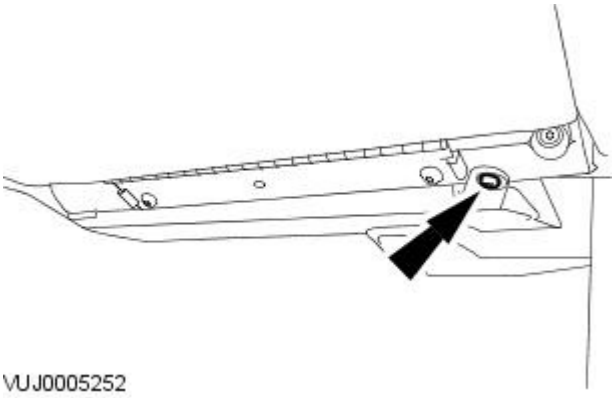


**2.** Remove the front footwell duct right-hand retaining bolt.

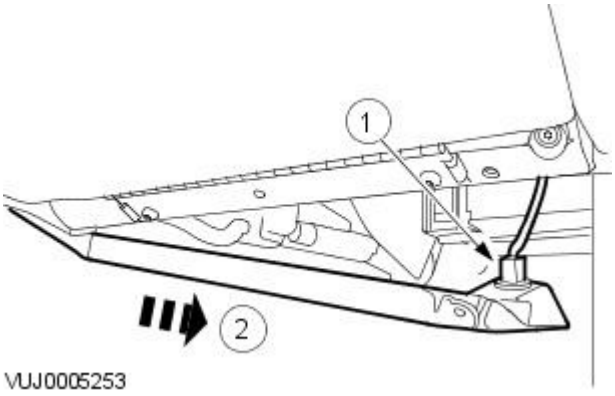


**3.** Remove the front footwell duct right-hand.

1. Detach the footwell lamp from the front footwell duct right-hand.
2. Remove the front footwell duct right-hand.

## Installation

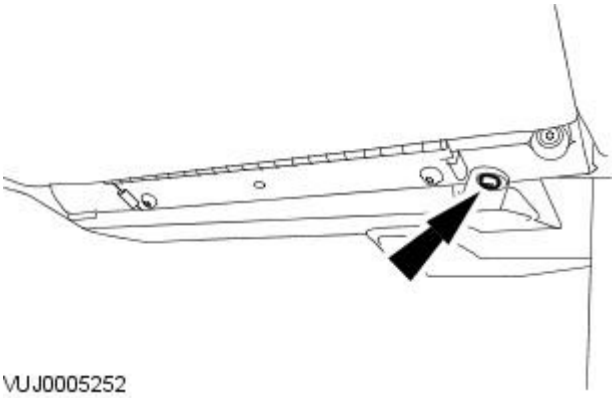


**1.** To install, reverse the removal procedure.

- Tighten to 3Nm.

GETtheMANUALS.org

# Air Distribution and Filtering - Passenger Side Register

Removal and Installation

## Removal

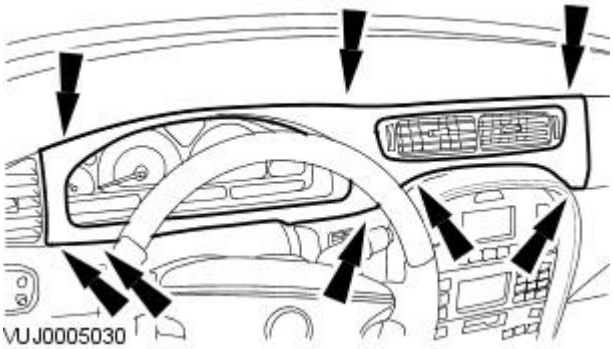


**1.** CAUTION: Make sure damage does not occur to the instrument panel finish panel.

Remove the instrument panel finish panel.

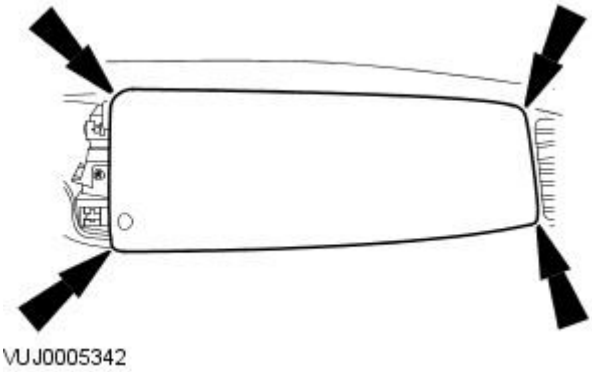


**2.** CAUTION: Make sure damage does not occur to the air bag module finish panel.

Remove the passenger air bag module finish panel.

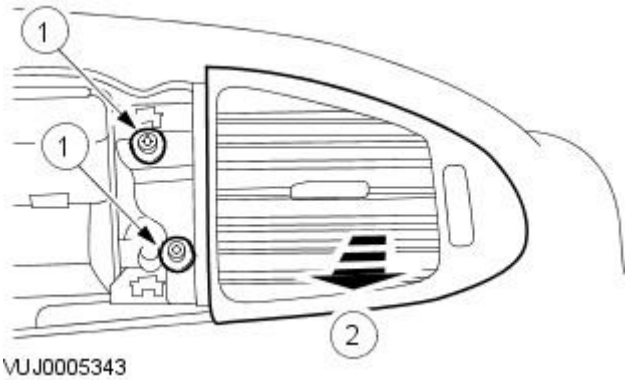


**3.** Remove the passenger side register.

1. Remove the passenger side register retaining screws
2. Remove the passenger side register.

## Installation

**1.** To install, reverse the removal procedure.

GETtheMANUALS.org

# Air Distribution and Filtering - Passenger Side Register Duct

Removal and Installation

## Removal

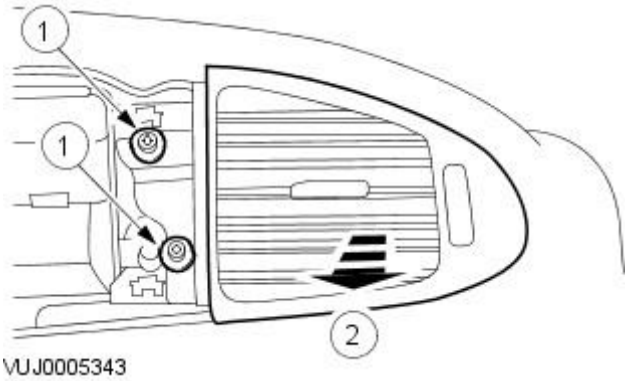


1. Remove the passenger air bag module. For additional information, refer to Section 501-20A Safety Belt System / 501-20B Supplemental Restraint System.
2. Remove the passenger side register.
    1. Remove the passenger side register retaining screws
    2. Remove the passenger side register.

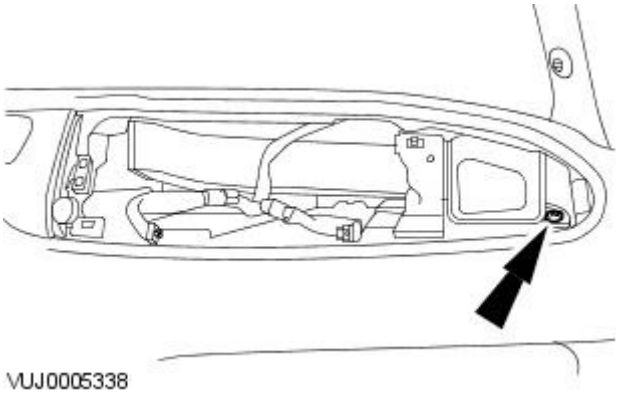


3. Remove the passenger side register duct retaining screw.

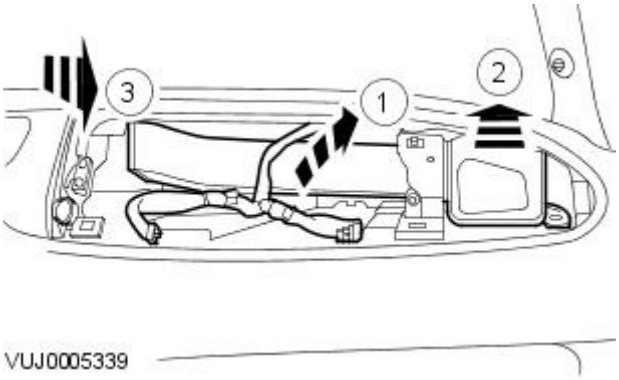


4. Detach passenger side register duct.
    1. Reposition the passenger air bag module electrical harness.
    2. Release the passenger side register duct from the instrument panel.
    3. Detach passenger side register duct.

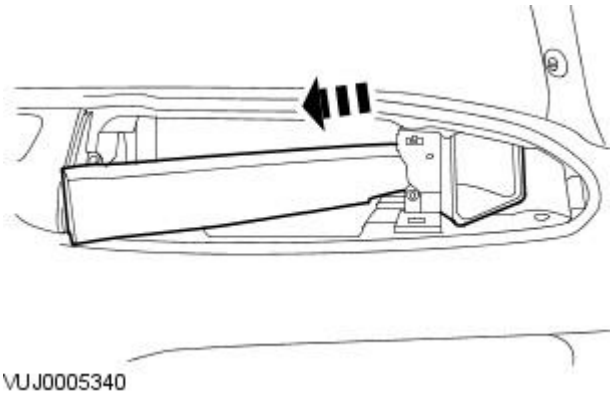


5. Remove the passenger side register duct.

## Installation

GETtheMANUALS.org

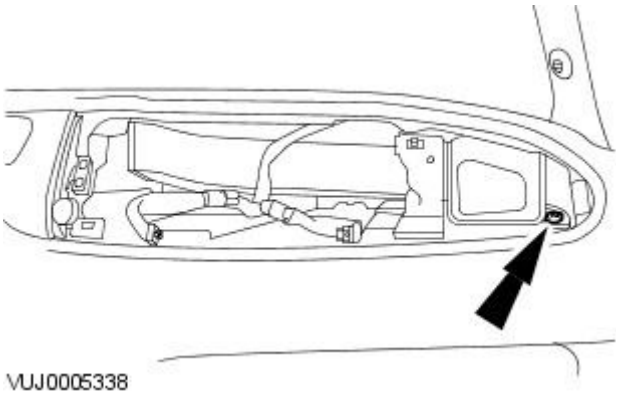


**1.** To install, reverse the removal procedure.

- Tighten to 3Nm.

GETtheMANUALS.org

# Air Distribution and Filtering - Rear Footwell Duct

Removal and Installation

## Removal

1. Remove the instrument panel.
   For additional information, refer to Section 501-12 Instrument Panel and Console.
2. Remove the front seat.
   For additional information, refer to Section 501-10 Seating.
3. Detach the rear footwell duct.
   - Remove the rear footwell duct retaining clips.

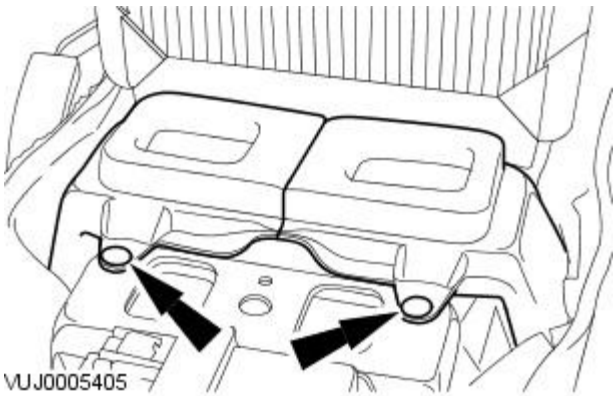


4. CAUTION: Make sure damage does not occur to the floor covering.

   Reposition the floor covering to access the rear floor duct.
5. Remove the rear footwell duct.
   1. Remove the rear footwell duct retaining clips.
   2. Remove the rear footwell duct.

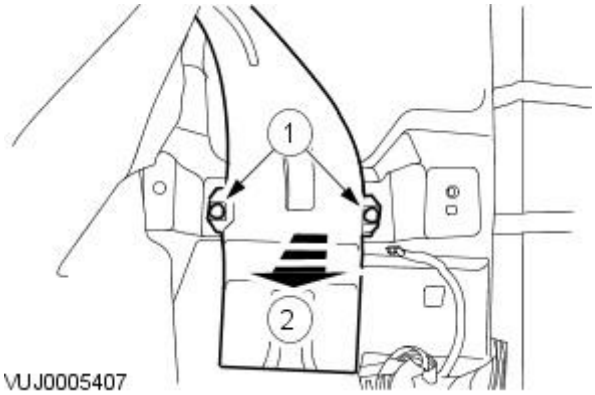


## Installation

1. To install, reverse the removal procedure.

GETtheMANUALS.org

# Heating and Ventilation -

**Torque Specifications**

| Description | Nm | lb-ft | lb-in |
|---|---|---|---|
| Heater hose bracket retaining bolt. | 7 | - | 62 |
| Evaporator core housing retaining nut. | 7 | - | 62 |
| Evaporator core housing retaining bolt. | 7 | - | 62 |
| Expansion valve manifold and tube assembly retaining bolt. | 8 | - | 71 |
| Auxillary coolant flow pump retaining bolt. | 10 | - | 89 |
| Dual coolant flow valve retaining bolt. | 10 | - | 89 |

GETtheMANUALS.org

# Heating and Ventilation - Heating and Ventilation

Description and Operation

The heating and defrosting system:

- controls the vehicle air temperature and, during air conditioning (A/C) operation, reduces the relative humidity of the air inside the vehicle.
- delivers heated or cooled air to maintain the vehicle interior temperature and comfort level.
- controls the brushless blower motor speed.
- allows temperature to be adjusted individually by the driver and the passenger to maintain comfort.
- uses a reheat method to provide conditioned air to the passenger compartment. All airflow from the blower motor passes through the A/C evaporator core. Temperature is regulated by reheating a portion of the air and blending it with the remaining cool air to achieve the desired temperature.
- blends the air temperature by regulating the flow of engine coolant to separate halves of the heater core. A dual coolant flow valve is used to control the flow of coolant.

The blower motor draws ambient air through the cabin air filter during all system operations except for MAX A/C cooling (when recirculated air is used) and OFF. For additional information, refer to Section 412-03 Air Conditioning.

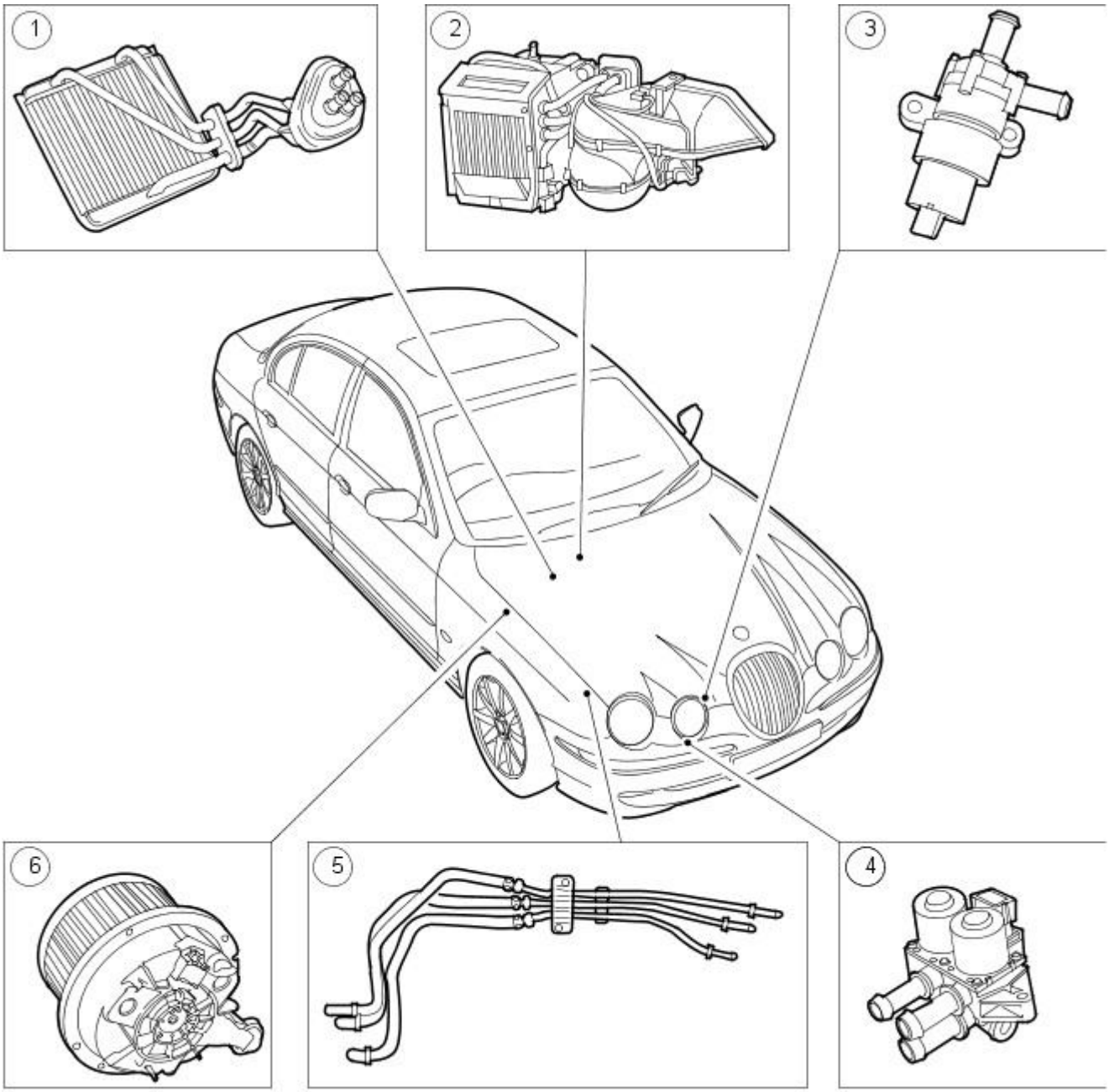


VUJ0005402

| Item | Part Number | Description |
|---|---|---|
| 1 | — | Heater core |
| 2 | — | Heater core and evaporator core housing |
| 3 | — | Auxiliary coolant flow pump - 4.2L only |
| 4 | — | Dual coolant flow valve |
| 5 | — | Heater hose assembly |
| 6 | — | Brushless blower motor |

## Heater core

The heater core consists of fins and tubes arranged to extract heat from the engine coolant and transfer it to the air passing through the heater core. The heater core is separated into two sections. Air passing through one section is directed to the driver side of the vehicle, while air passing through the other section is directed to the passenger side of the vehicle. The heater core has separate inlet ports with a common outlet port.

CERTIFIEDAUDIS.com

## Dual coolant control valve

The dual coolant valve regulates the flow of engine coolant to each half of the heater core. Two electric solenoids, Which are individually actuated by the heater control module, are the control elements. The valve contains three ports:

- inlet port - coolant from the engine
- outlet port - coolant to driver side of heater core
- outlet port - coolant to passenger side of heater core

## Auxiliary coolant flow pump vehicles fitted with 4.2L engine

The auxiliary coolant flow pump is electrically driven and provides increased coolant flow during low engine speed operation. The pump is also used to circulate coolant after the engine is turned off under certain conditions.

## Blower motor

The brushless blower motor pulls air from the air inlet and forces it into the plenum assembly where it is mixed and distributed. The blower motor has eleven speeds (vehicles with telematics have seven speeds) and is controlled by the climate control assembly.

GETtheMANUALS.org

Published: 11-May-2011

# Heating and Ventilation - Heating and Ventilation

Diagnosis and Testing

REFER to Section 412-00 Climate Control System - General Information.

GETtheMANUALS.org

# Heating and Ventilation - Auxiliary Coolant Flow Pump2.7L V6 - TdV6

Removal and Installation

## Removal

1. Remove the air deflector.
   For additional information, refer to: Air Deflector (501-02 Front End Body Panels, Removal and Installation).
2. Disconnect the auxiliary coolant flow pump electrical connector.

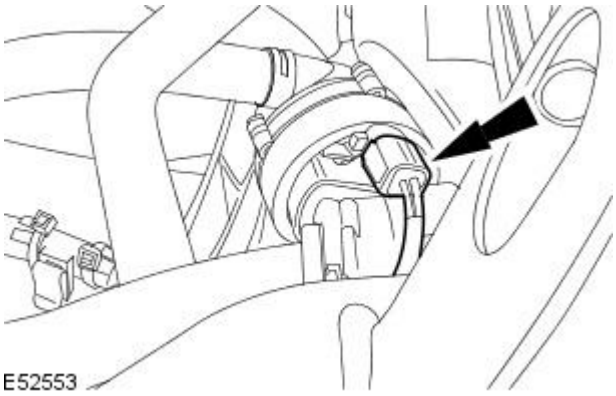


3. NOTE: Using a suitable tool, clamp the hose to minimize coolant loss.

   Detach the lower coolant hose.

4. NOTE: Using a suitable tool, clamp the hose to minimize coolant loss.

   Detach the upper coolant hose.

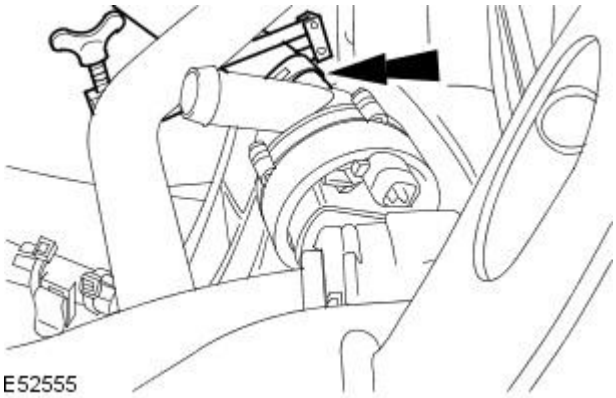


5. Remove the auxiliary coolant flow pump.

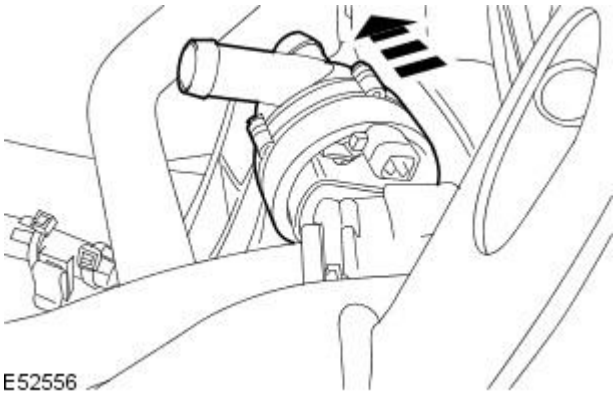


## Installation

GETtheMANUALS.org

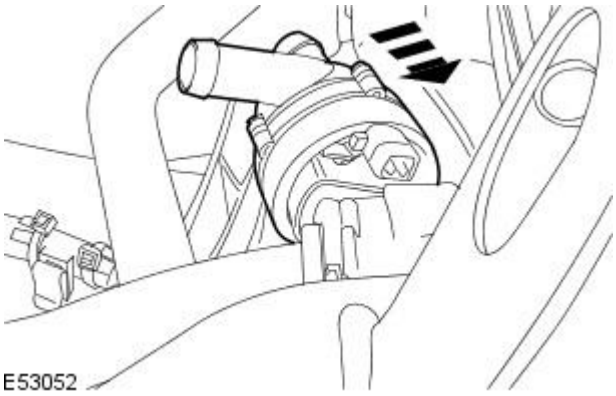


**1.** Install the auxiliary coolant flow pump.

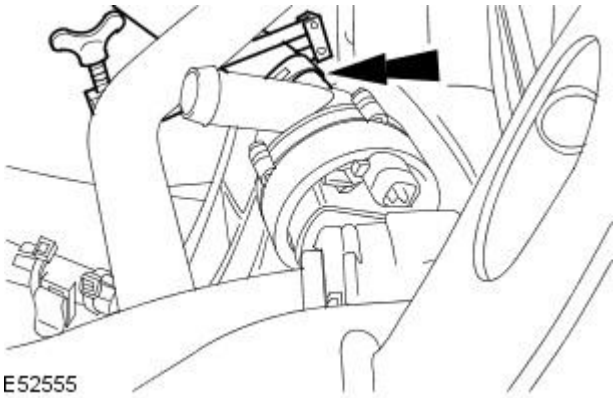


**2.** Attach the upper coolant hose.

- Remove the pipe clamp.

**3.** Attach the lower coolant hose.

- Remove the pipe clamp.

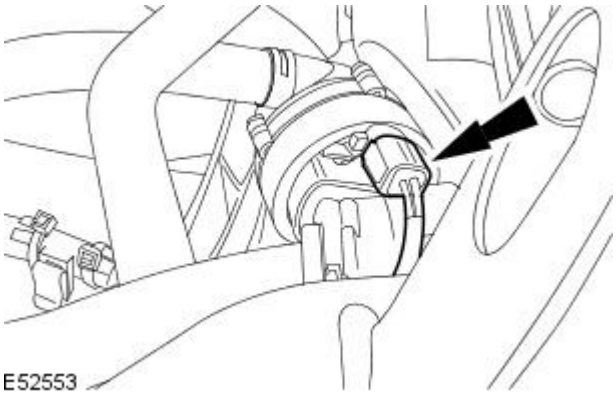


**4.** Connect the auxiliary coolant flow pump electrical connector.

**5.** Remove the coolant expansion tank pressure cap.

**6.** Fill the cooling system up to the MAX mark on the coolant expansion tank using a fifty percent mixture of Jaguar premium cooling system fluid or equivalent, meeting Jaguar specification WSS M97B44-D and fifty percent water.

**7.** Install the coolant expansion tank pressure cap.

**8.** START and RUN the engine.

**9.** Set the heating system to MAX heat, the blower motor to MAX speed and the air distribution to instrument panel registers.

**10.** CAUTION: Observe the engine temperature gauge. If the engine starts to over-heat switch off immediately and allow to cool. Failure to follow this instruction may result in damage to the vehicle.

Allow the engine to RUN until hot air is emitted from the instrument

GETtheMANUALS.org

panel registers, while observing the engine temperature gauge.

**11.** Switch off the engine.

**12.** Allow the engine to cool.

**13.** WARNING: Never remove the coolant pressure cap under any circumstances while the engine is operating. Failure to follow this instruction may result in personal injury. To avoid having scalding hot coolant or steam blow out of the cooling system, use extreme care when removing the coolant pressure cap from a hot cooling system. Wait until the engine has cooled, then wrap a thick cloth around the coolant pressure cap and turn it slowly until the pressure begins to release. Step back while the pressure is released from the system. When certain all the pressure has been released (still with a cloth) turn and remove the coolant pressure cap from the coolant expansion tank. Failure to follow these instructions may result in personal injury.

Release the cooling system pressure.

- Remove the coolant expansion tank pressure cap.

**14.** Fill the cooling system up to the MAX mark on the coolant expansion tank using a fifty percent mixture of Jaguar premium cooling system fluid or equivalent, meeting Jaguar specification WSS M97B44-D and fifty percent water.

**15.** Install the coolant expansion tank pressure cap.

**16.** Raise the vehicle.

**17.** Check for water leaks.

**18.** Install the air deflector.
For additional information, refer to: Air Deflector (501-02 Front End Body Panels, Removal and Installation).

GETtheMANUALS.org

# Heating and Ventilation - Auxiliary Coolant Flow PumpV8 4.2L Petrol/V8 S/C 4.2L Petrol

Removal and Installation

## Removal

1. Carry out the cooling system drain procedure. For additional information, refer to Section 303-03A Engine Cooling / 303-03B Supercharger Cooling / 303-03C Engine Cooling.
2. Remove the radiator upper hose.

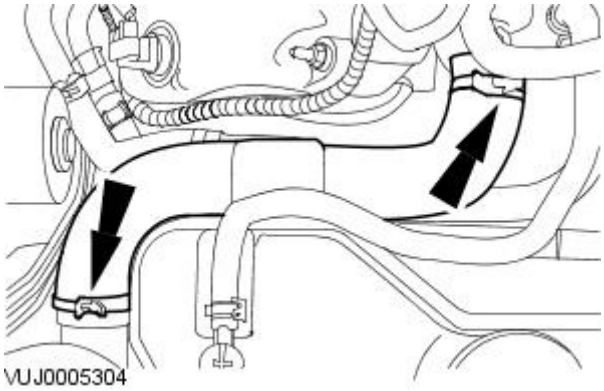


3. Detach the thermostat housing lower hose.

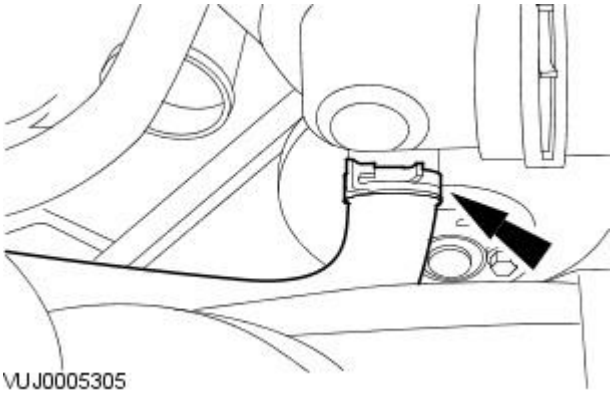


4. Disconnect the coolant expansion tank lower hose.

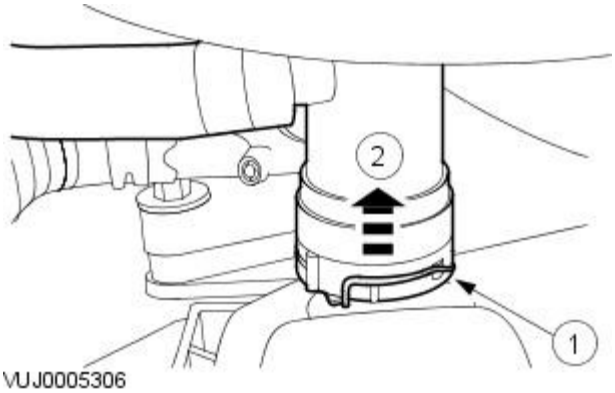


5. Disconnect the heater hose.

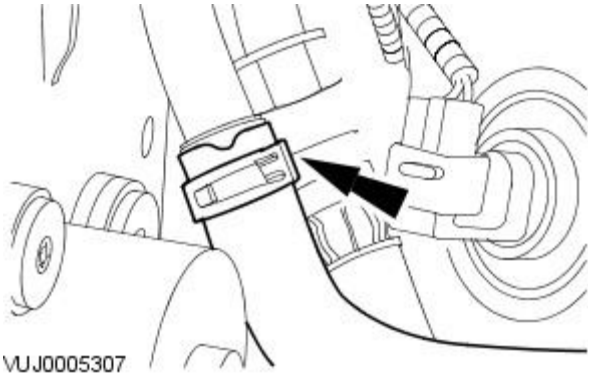


GETtheMANUALS.org

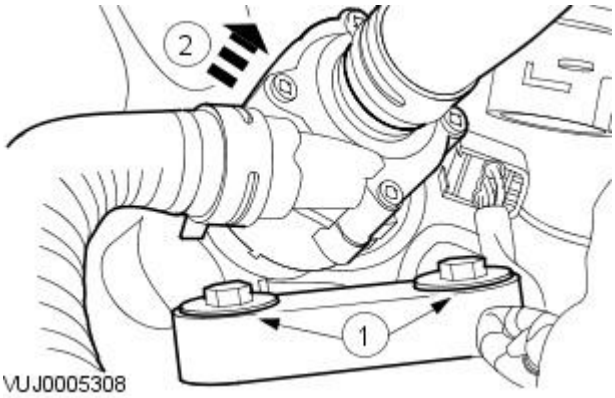


**6.** Detach the auxillary coolant flow pump.

1. Remove the retaining bolts.
2. Detach the auxillary coolant flow pump.

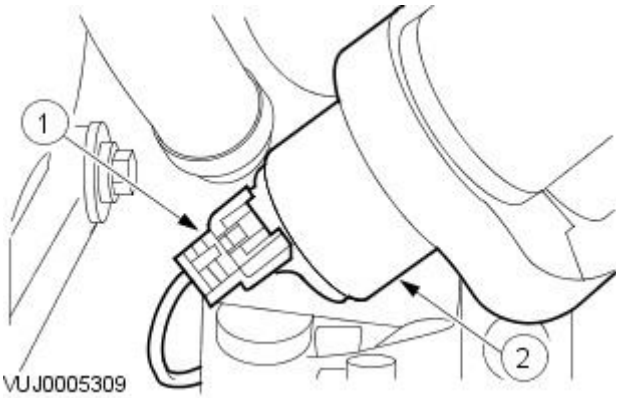


**7.** Remove the auxillary coolant flow pump and hoses.

1. Disconnect the electrical connector.
2. Remove the auxillary coolant flow pump and hoses.

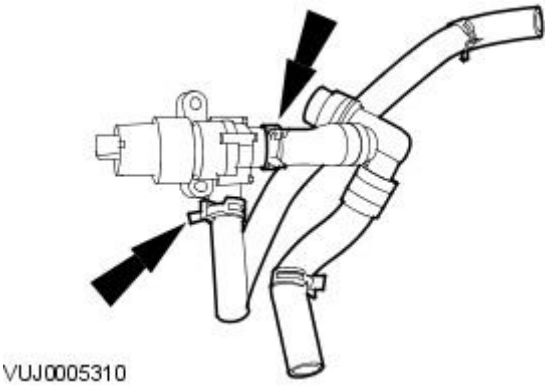


**8.** Remove the auxillary coolant flow pump hoses.

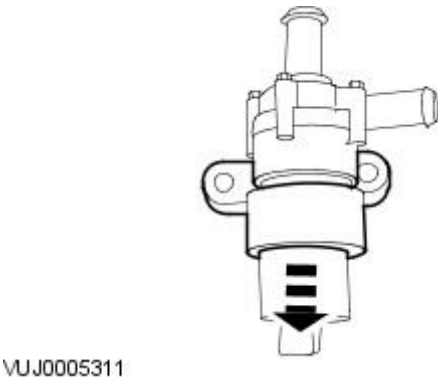


**9.** Remove the auxillary coolant flow pump retaining bracket.

## Installation

GETtheMANUALS.org

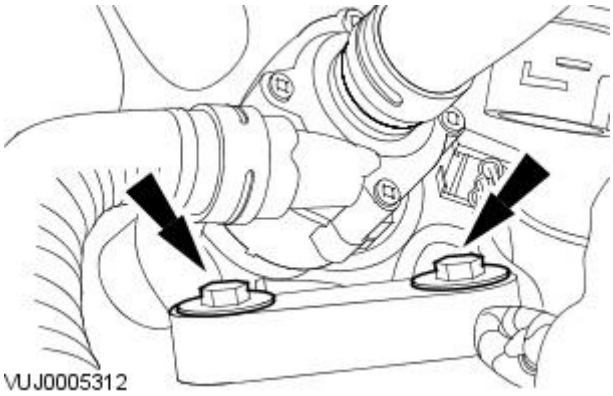


1. To install, reverse the removal procedure.
   - Tighten to 10 Nm.

2. Carry out the cooling system filling and bleeding procedure. For additional information, refer to Section 303-03A Engine Cooling / 303-03B Supercharger Cooling / 303-03C Engine Cooling.

GETtheMANUALS.org

# Heating and Ventilation - Blower Motor

Removal and Installation

## Removal

1. Disconnect the battery ground cable.
   For additional information, refer to Section 414-01 Battery, Mounting and Cables.
2. Remove the passenger side instrument panel closing panel.

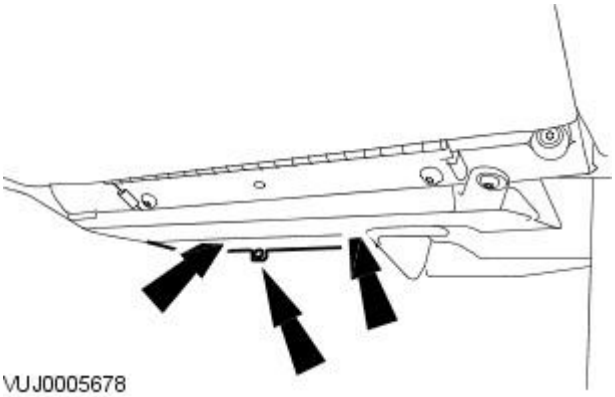


3. Remove the blower motor.
   1. Disconnect the electrical connector.
   2. Remove the blower motor.

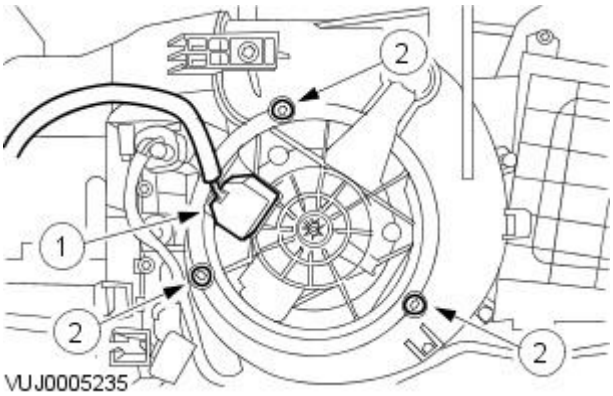


## Installation

1. To install, reverse the removal procedure.

GETtheMANUALS.org

# Heating and Ventilation - Dual Coolant Flow ValveV8 4.2L Petrol/V8 S/C 4.2L Petrol/2.5L NA V6 - AJV6/3.0L NA V6 - AJ27

Removal and Installation

## Removal

All vehicles

1. Drain the cooling system. For additional information, refer to Section 303-03A Engine Cooling / 303-03B Supercharger Cooling / 303-03C Engine Cooling.
2. Remove the wheel and tire assembly.

3. Remove the fender splash shield.

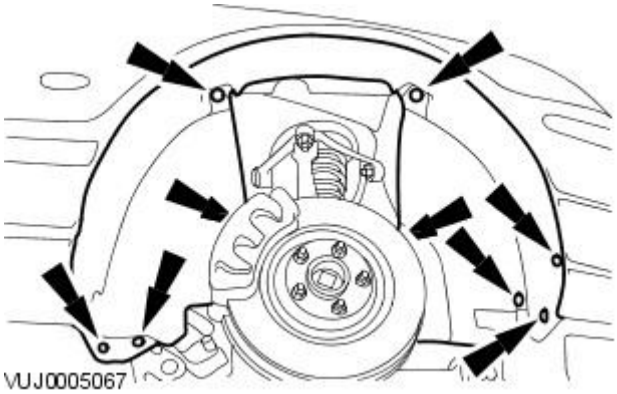


4. Remove the air deflector.

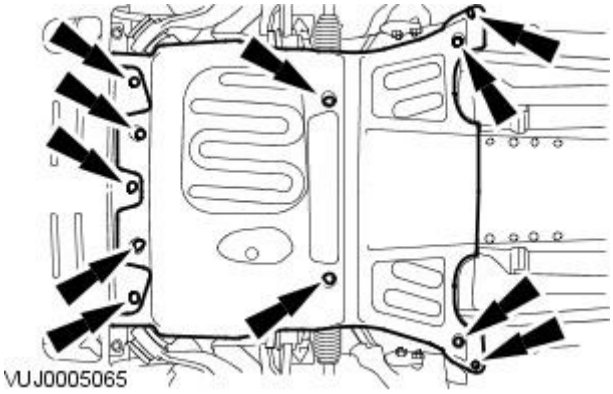


5. Remove the drive belt splash shield.

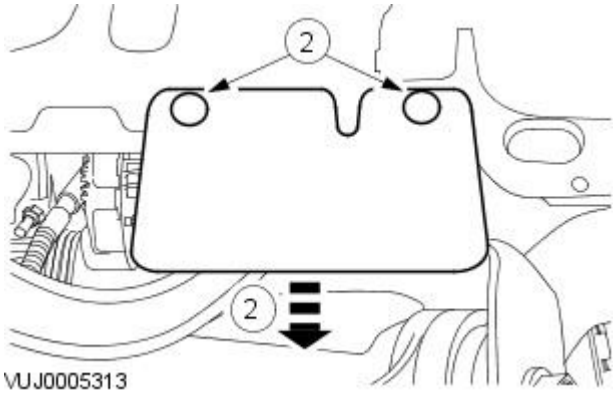


GETtheMANUALS.org

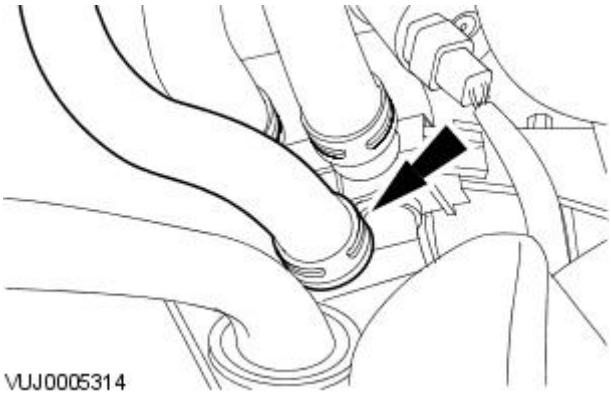


**6.** Disconnect the dual coolant flow valve bottom hose.

For vehicles fitted with 4.2L engine

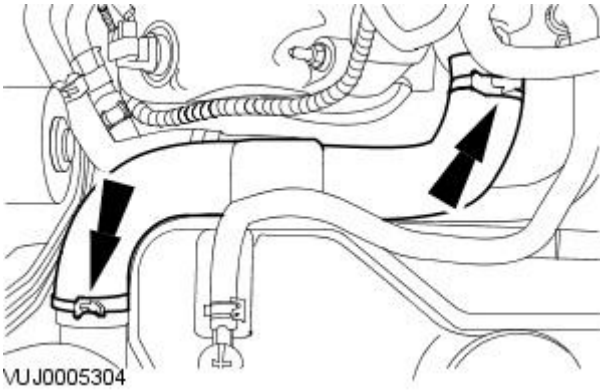


**7.** Remove the radiator upper hose.

All vehicles

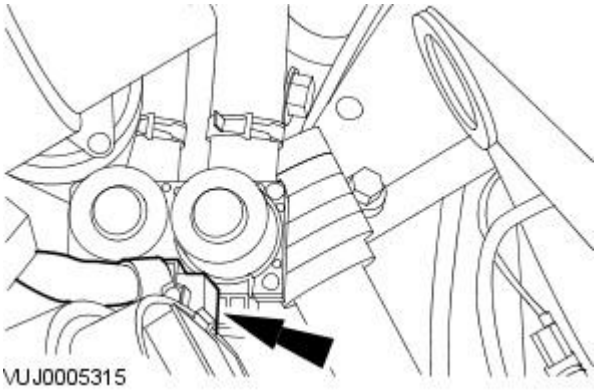


**8.** Disconnect the dual coolant flow valve electrical connector.

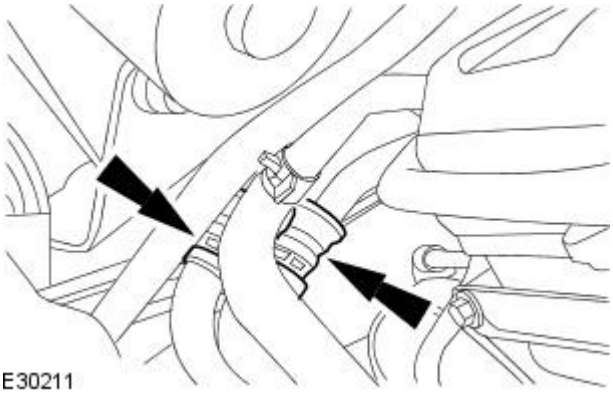


**9.** Disconnect the heater hose couplings.

GETtheMANUALS.org

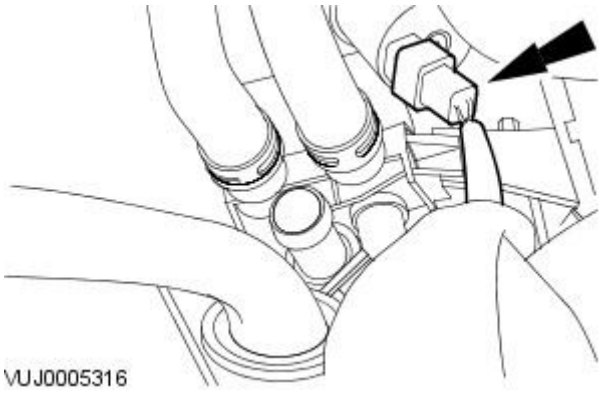


**10.** Disconnect the auxillary coolant flow pump electrical connector.

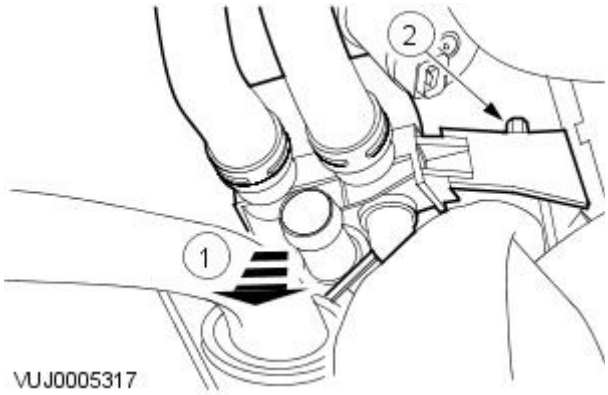


**11.** Remove the dual coolant flow valve.

1. Remove the retaining bolt.
2. Remove the dual coolant flow valve.

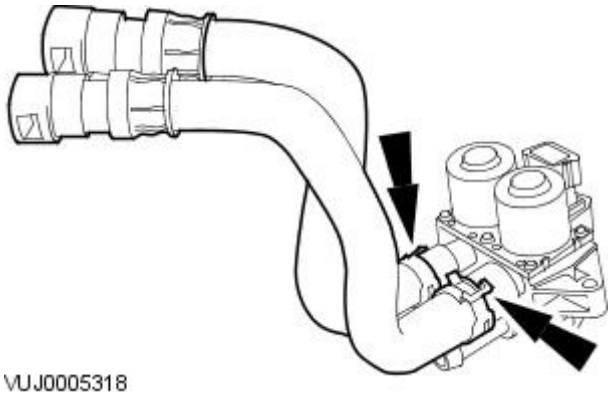


**12.** Remove the dual coolant flow valve hoses.

## Installation

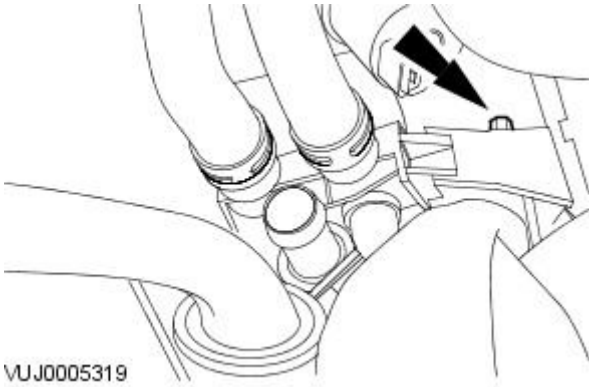


**1.** To install, reverse the removal procedure.

- Tighten to 10 Nm.

GETtheMANUALS.org

# Heating and Ventilation - Dual Coolant Flow Valve2.7L V6 - TdV6

Removal and Installation

## Removal

1. Remove the radiator splash shield.
   For additional information, refer to: Radiator Splash Shield (501-02 Front End Body Panels, Removal and Installation).

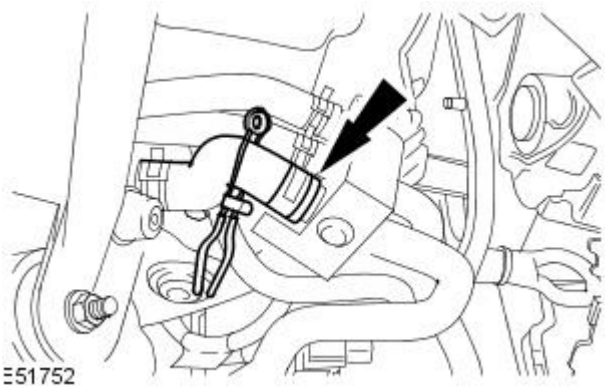


2. NOTE: Using a suitable tool, clamp the hose to minimise coolant loss.

   Detach the heater box return hose.

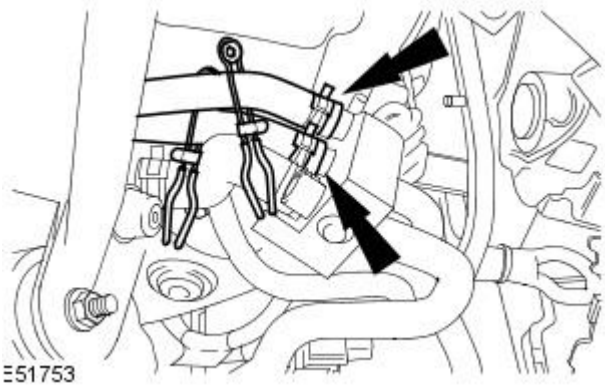


3. NOTE: Using a suitable tool, clamp the hose to minimise coolant loss.

   Detach the heater box supply hoses.

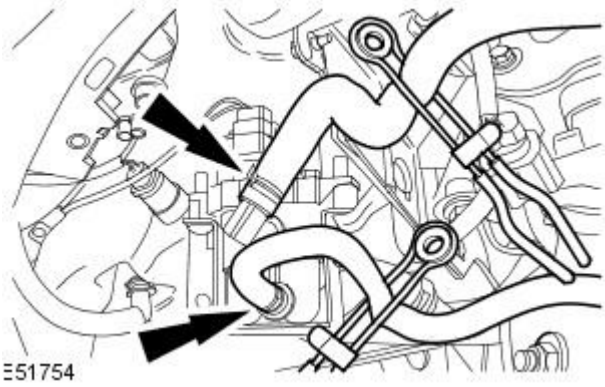


4. NOTE: Using a suitable tool, clamp the hose to minimise coolant loss.

   Detach the auxiliary heater supply and return hoses.

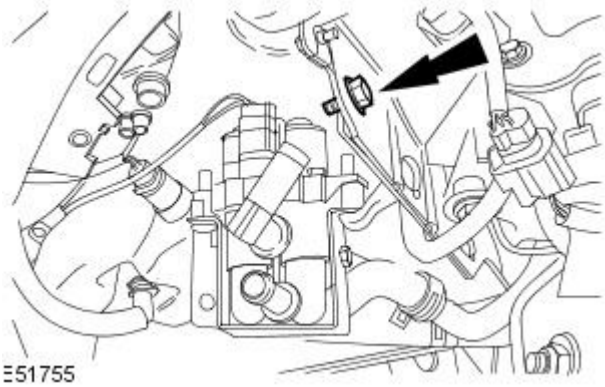


5. Detach the dual coolant flow valve.
   - Remove the dual coolant flow valve bracket retaining bolt.

GETtheMANUALS.org

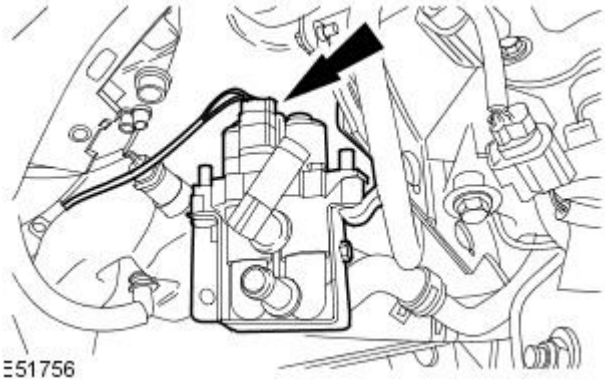


**6.** Remove the dual coolant flow valve.

- Disconnect the dual coolant flow valve electrical connector.

## Installation

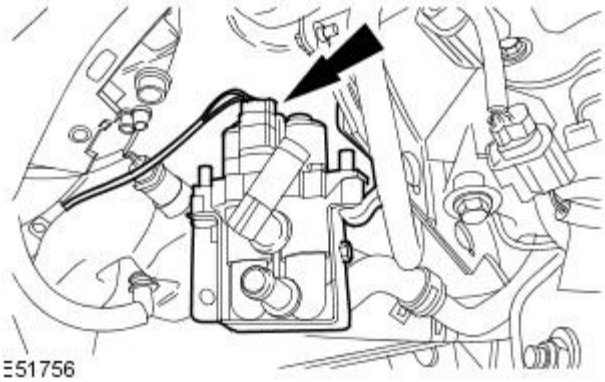


**1.** Install the dual coolant flow valve.

- Connect the dual coolant flow valve electrical connector.

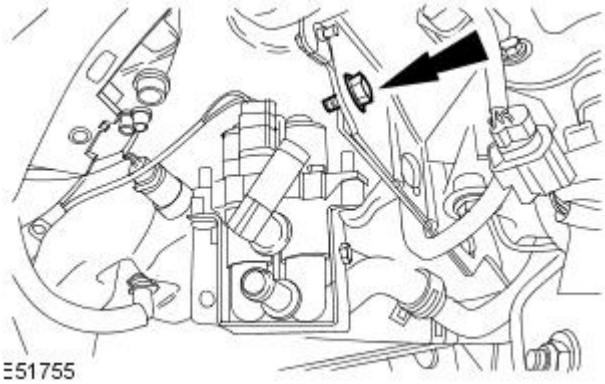


**2.** Attach the dual coolant flow valve.

- Tighten to 17 Nm.

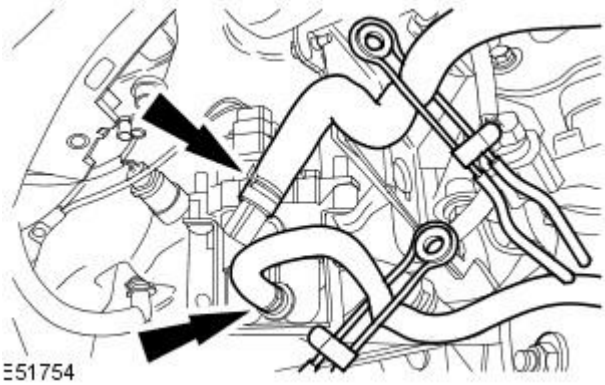


**3.** Attach the auxiliary heater supply and return hoses.

- Remove the pipe clamp.

GETtheMANUALS.org

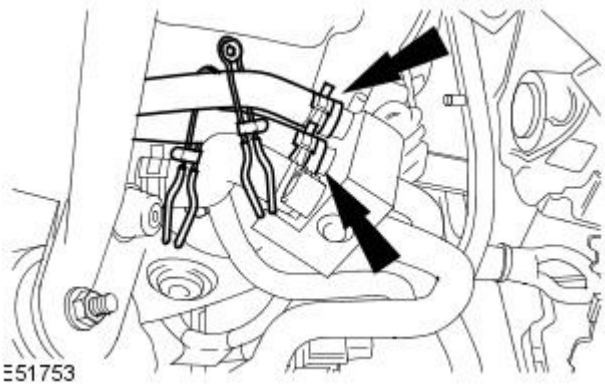


**4.** Attach the heater box supply hoses.

- Remove the pipe clamp.

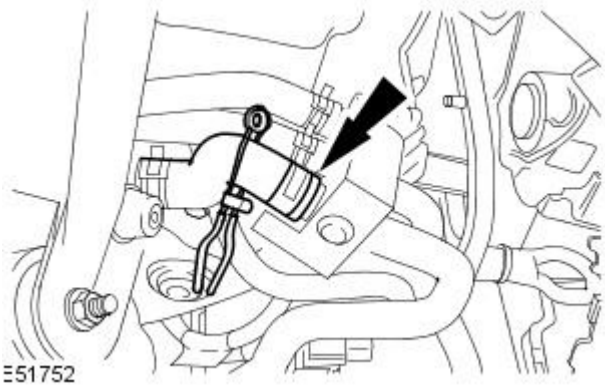


**5.** Attach the heater box return hose.

- Remove the pipe clamp.

**6.** Lower the vehicle.

**7.** Remove the coolant expansion tank pressure cap.

**8.** Fill the cooling system up to the MAX mark on the coolant expansion tank using a fifty percent mixture of Jaguar premium cooling system fluid or equivalent, meeting Jaguar specification WSS M97B44-D and fifty percent water.

**9.** Install the coolant expansion tank pressure cap.

**10.** START and RUN the engine.

**11.** Set the heating system to MAX heat, the blower motor to MAX speed and the air distribution to instrument panel registers.

**12.** CAUTION: Observe the engine temperature gauge. If the engine starts to over-heat switch off immediately and allow to cool. Failure to follow this instruction may result in damage to the vehicle.

Allow the engine to RUN until hot air is emitted from the instrument panel registers, while observing the engine temperature gauge.

**13.** Switch off the engine.

**14.** Allow the engine to cool.

**15.** WARNING: Never remove the coolant pressure cap under any circumstances while the engine is operating. Failure to follow this instruction may result in personal injury. To avoid having scalding hot coolant or steam blow out of the cooling system, use extreme care when removing the coolant pressure cap from a hot cooling system. Wait until the engine has cooled, then wrap a thick cloth around the coolant pressure cap and turn it slowly until the pressure begins to release. Step back while the pressure is released from the system. When certain all the pressure has been released (still with a cloth) turn and remove the coolant pressure cap from the coolant expansion tank. Failure to follow these instructions may result in personal injury.

Release the cooling system pressure.

- Remove the coolant expansion tank pressure cap.

**16.** Fill the cooling system up to the MAX mark on the coolant expansion tank using a fifty percent mixture of Jaguar premium cooling system fluid or equivalent, meeting Jaguar specification WSS M97B44-D and fifty percent water.

**17.** Install the coolant expansion tank pressure cap.

**18.** Raise the vehicle.

**19.** Check for water leaks.

**20.** Install the radiator splash shield.
For additional information, refer to: Radiator Splash Shield (501-02 Front End Body Panels, Removal and Installation).

GETtheMANUALS.org

# Heating and Ventilation - Heater Core and Evaporator Core Housing

Removal and Installation

All vehicles

1. Disconnect the battery ground cable.
   For additional information, refer to Section 414-01 Battery, Mounting and Cables.
2. Carry out the air conditioning recovery procedure.
   For additional information, refer to Section 412-00 Climate Control System - General Information.

Right-hand drive vehicles without supercharger

3. Remove the heater hose.
   For additional information, refer to Heater Hose in this section.

Left-hand drive vehicles and vehicles with supercharger

4. Drain the cooling system. For additional information, refer to Section 303-03A Engine Cooling / 303-03B Supercharger Cooling / 303-03C Engine Cooling.
5. Disconnect the heater hoses from the heater core and evaporator core housing.

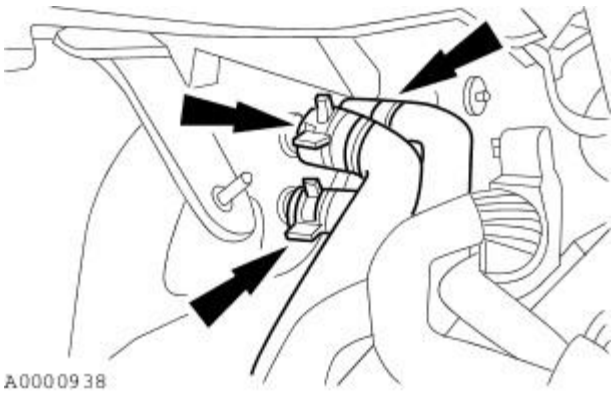


Vehicles with supercharger

6. Remove the throttle body. For additional information, refer to Section 303-04A Fuel Charging and Controls / 303-04B Fuel Charging and Controls / 303-04C Fuel Charging and Controls / 303-04D Fuel Charging and Controls - Turbocharger.

All vehicles

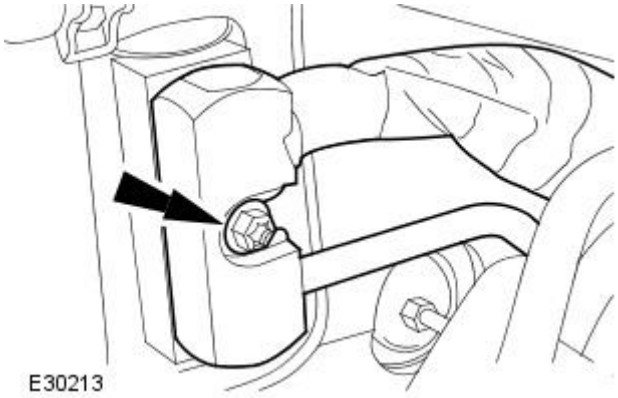


7. NOTE: Cap the air conditioning ports.

   Disconnect the expansion valve manifold and tube assembly.

   - Remove and discard the O-ring seals.

GETtheMANUALS.org

8. Remove the heater core and evaporator core housing retaining nut.

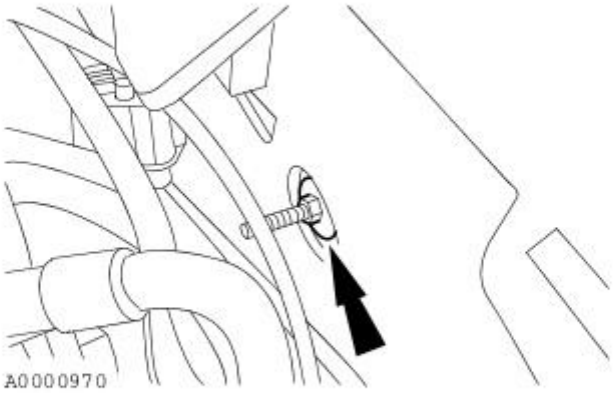


9. Remove the heater core and evaporator core housing retaining nut.

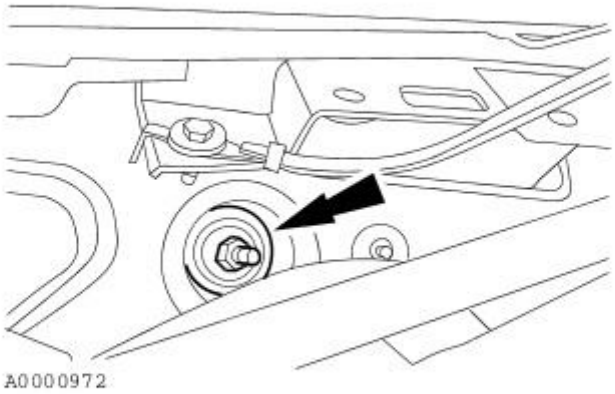


GETtheMANUALS.org

**10.** Remove the heater core and evaporator core housing retaining nut.

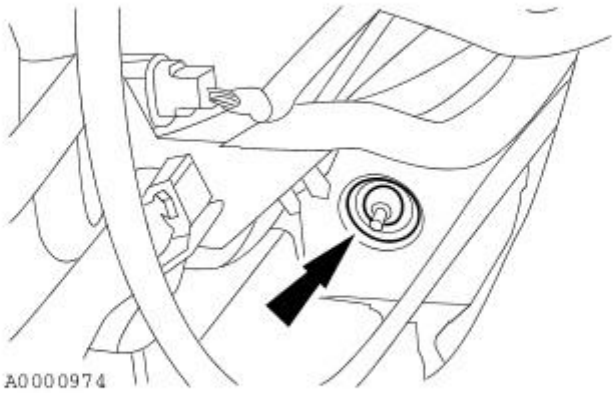


**11.** Remove the instrument panel.
For additional information, refer to Section 501-12 Instrument Panel and Console.

**12.** Detach the rear footwell ducts.

- Remove the pin-type retainers.
- Detach the rear footwell ducts.

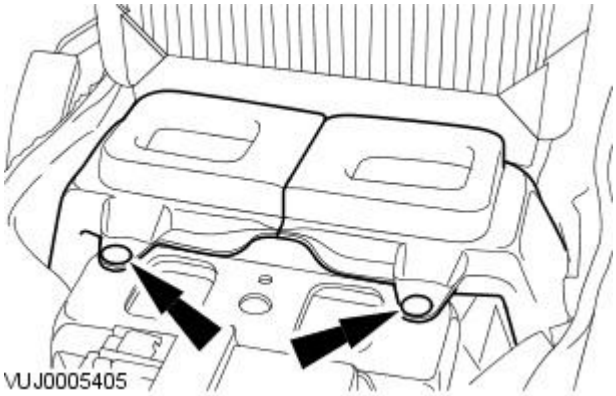


**13.** Remove the engine control module (ECM) retaining bracket.

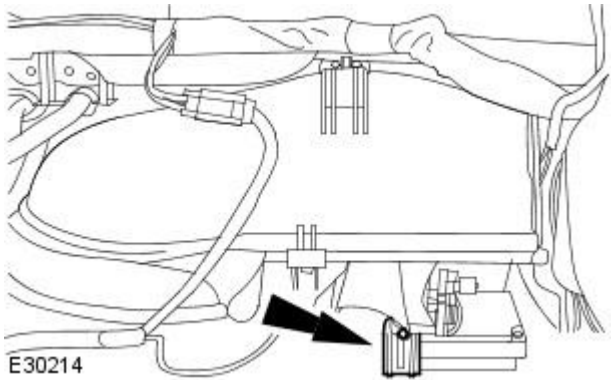


**14.** Remove the heater core and evaporator core housing retaining bolt.

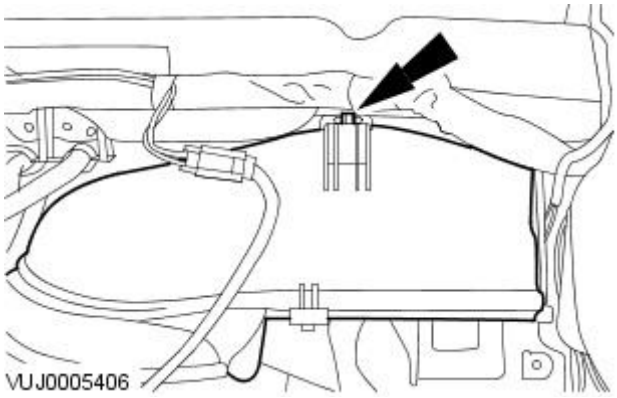


GETtheMANUALS.org

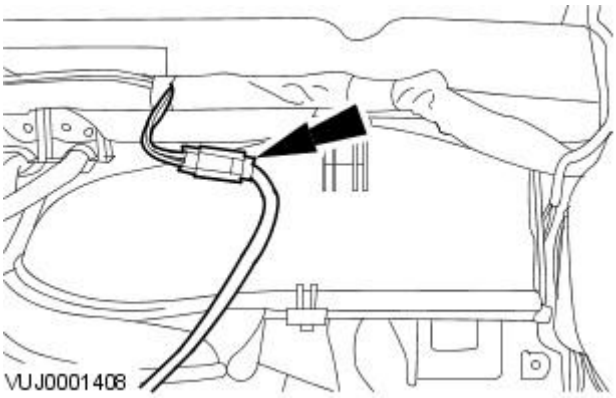


**15.** Disconnect the heater core and evaporator core housing electrical connector.

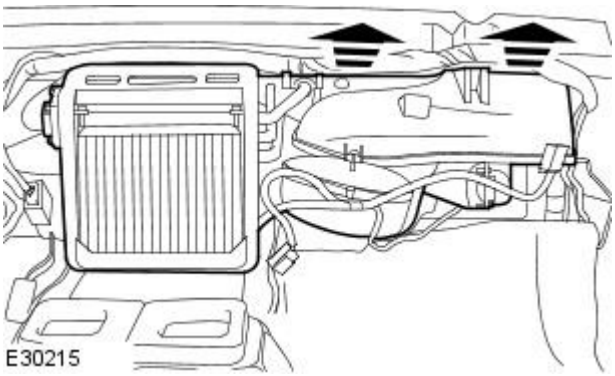


**16.** NOTE: The heater core and evaporator core housing will still contain coolant. Protect the interior of the vehicle from any spillages.

Remove the heater core and evaporator core housing.

## Installation

All vehicles

**1.** Install the heater core and evaporator core housing.

**2.** Connect the heater core and evaporator core housing electrical connector.

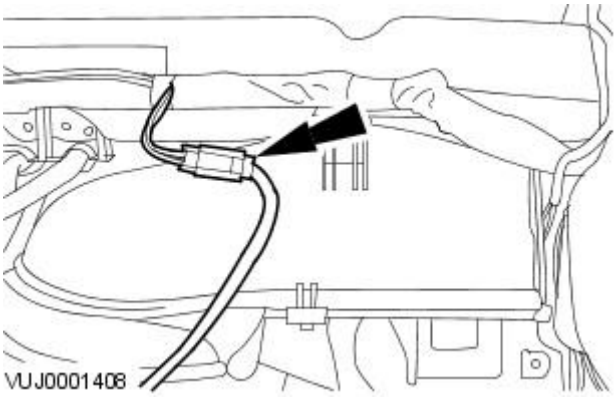


**3.** Install the heater core and evaporator core housing retaining bolt.

- Tighten to 7 Nm.

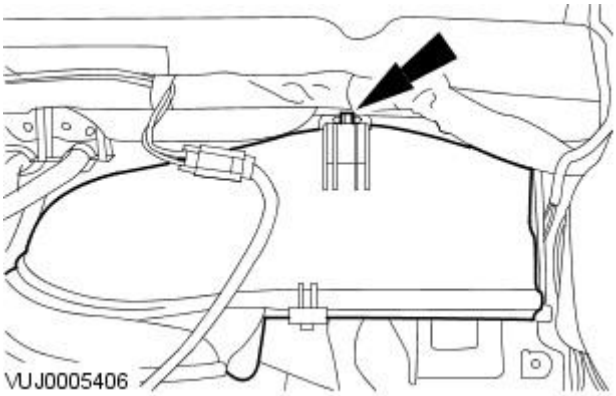


GETtheMANUALS.org

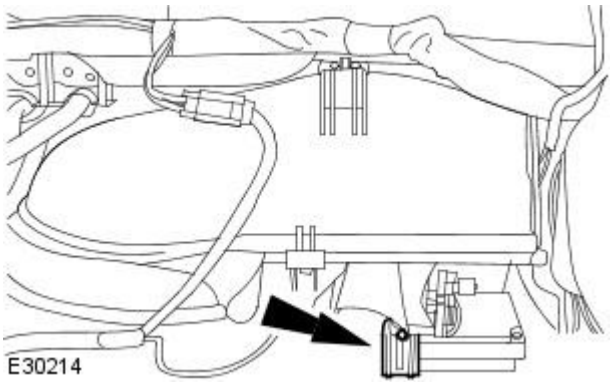


**4.** Install the ECM retaining bracket.

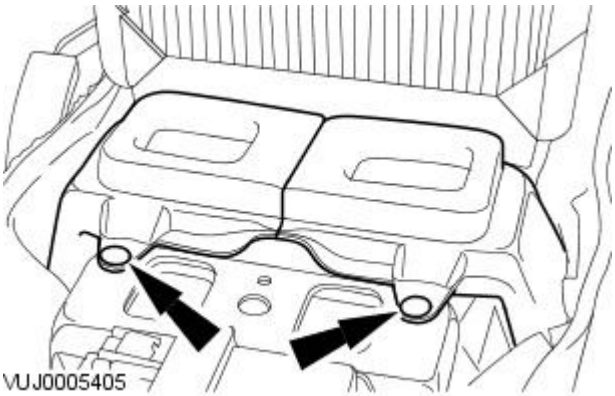


**5.** Attach the rear footwell ducts.

- Install the pin-type retainers.

**6.** Install the instrument panel.
For additional information, refer to Section [501-12 Instrument Panel and Console](#).

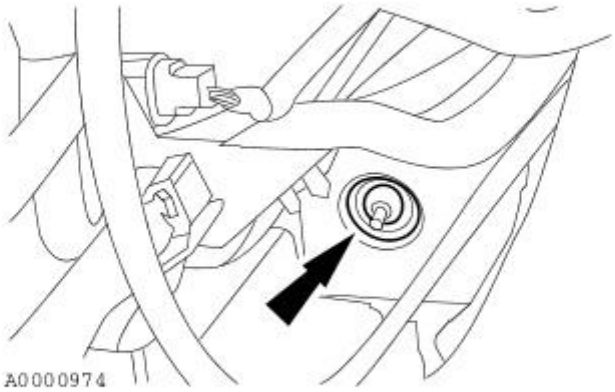


**7.** Install the heater core and evaporator core housing retaining nut.

- Tighten to 7 Nm.

GETtheMANUALS.org

8. Install the heater core and evaporator core housing retaining nut.

- Tighten to 7 Nm.

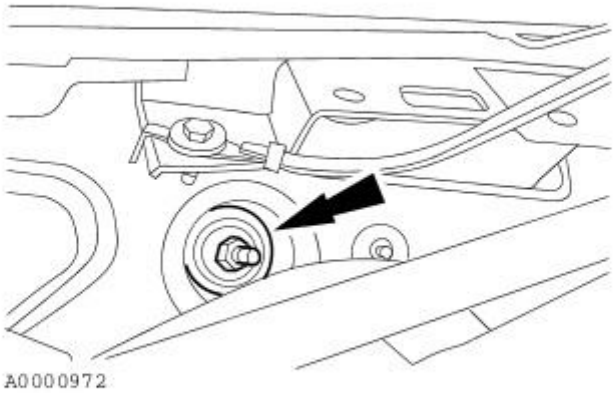


9. Install the heater core and evaporator core housing retaining nut.

Tighten to 7 Nm.

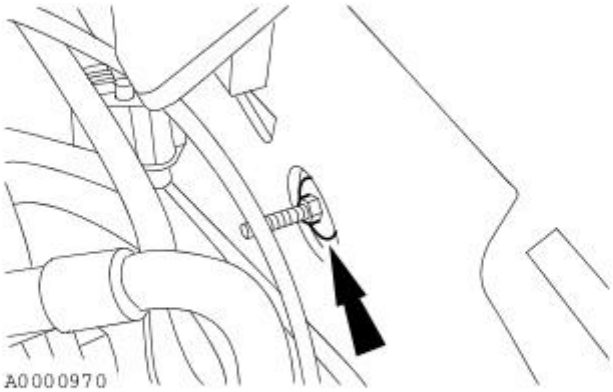


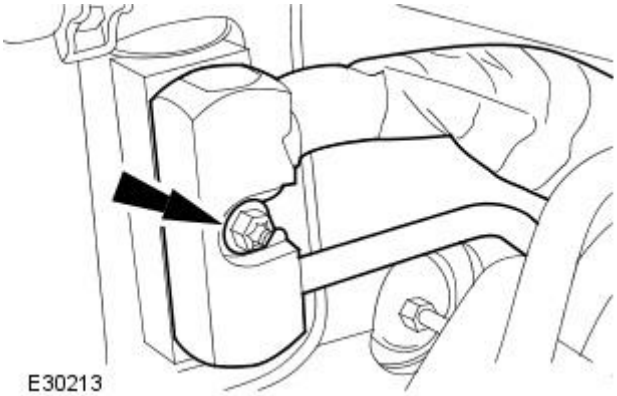


10. NOTE: Uncap the air conditioning ports.

Connect the expansion valve manifold and tube assembly.

- Install new O-ring seals.
- Tighten to 8 Nm.

Vehicles with supercharger

11. Install the throttle body. For additional information, refer to Section 303-04A Fuel Charging and Controls / 303-04B Fuel Charging and Controls / 303-04C Fuel Charging and Controls / 303-04D Fuel Charging and Controls - Turbocharger.

Left-hand drive vehicles and vehicles with supercharger

GETthemANUALS.org

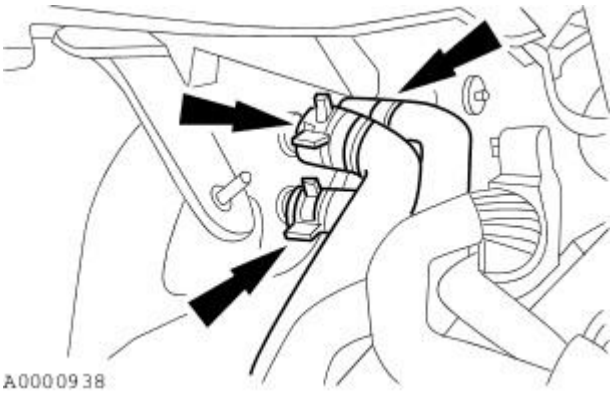


**12.** Connect the heater hoses to the heater core and evaporator core housing.

**13.** Carry out the cooling system filling and bleeding procedure. For additional information, refer to Section 303-03A Engine Cooling / 303-03B Supercharger Cooling / 303-03C Engine Cooling.

Right-hand drive vehicles without supercharger

**14.** Install the heater hose.
For additional information, refer to Heater Hose in this section.

All vehicles

**15.** Carry out the air conditioning evacuation and charge procedure.
For additional information, refer to Section 412-00 Climate Control System - General Information.

**16.** Connect the battery ground cable.
For additional information, refer to Section 414-01 Battery, Mounting and Cables.

GETtheMANUALS.org

# Heating and Ventilation - Heater HoseV8 4.2L Petrol/V8 S/C 4.2L Petrol/2.5L NA V6 - AJV6/3.0L NA V6 - AJ27

Removal and Installation

## Removal

All vehicles

1. Carry out the cooling system drain procedure. For additional information, refer to Section 303-03A Engine Cooling / 303-03B Supercharger Cooling / 303-03C Engine Cooling.
2. Remove the cowl vent screen.
   For additional information, refer to Section 501-02 Front End Body Panels.
3. Remove the engine compartment support.

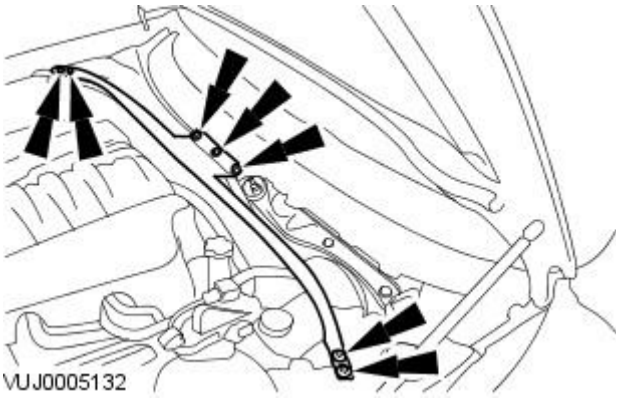


Right-hand drive vehicles

4. Detach the ground cable.

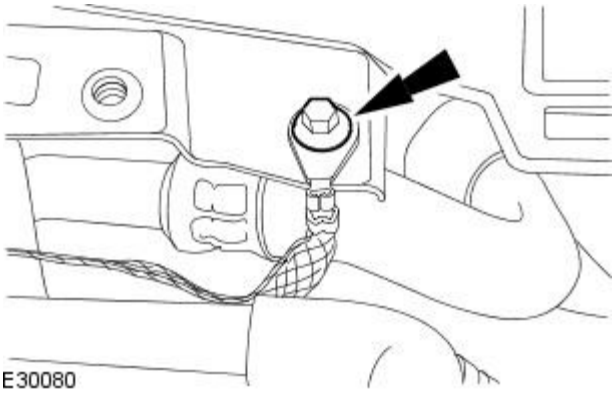


5. NOTE: Brake booster vacuum hose is attached to the induction manifold by a quick release coupling.

   Detach the brake booster vacuum hose from the induction manifold.

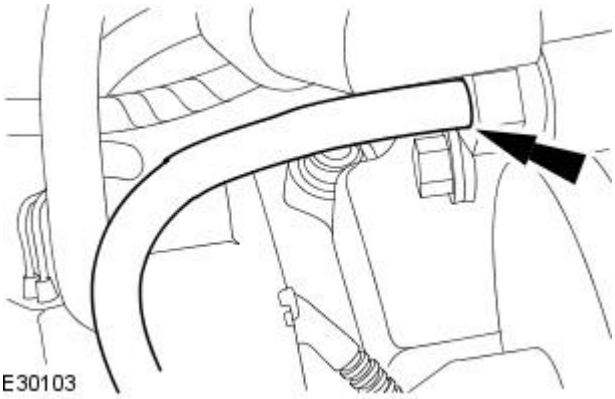


All vehicles

GETtheMANUALS.org

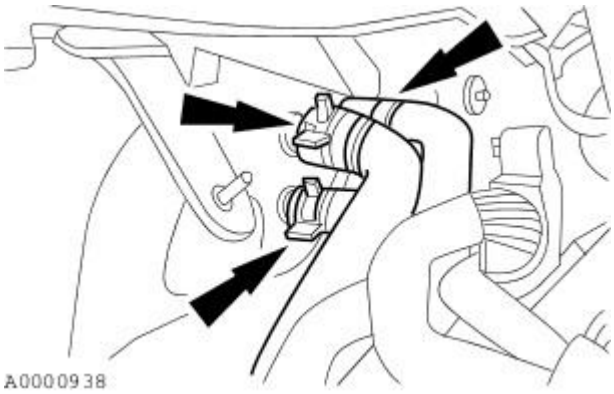


**6.** Disconnect the heater hose from the heater core.

Right-hand drive vehicles fitted with 2.5L and 3.0L engines.

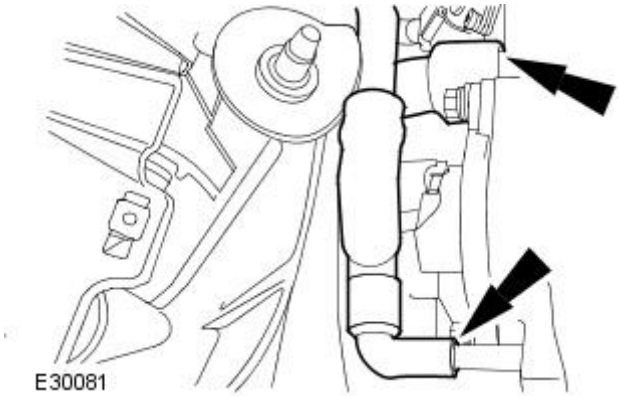


**7.** Disconnect the engine breather hoses.

All vehicles

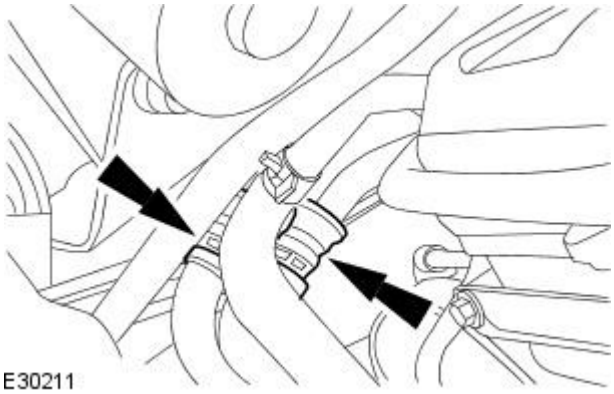


**8.** Disconnect the heater hose couplings.

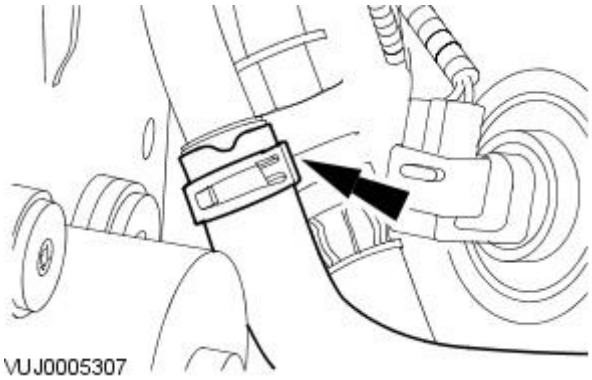


**9.** Disconnect the heater hose.

GETtheMANUALS.org

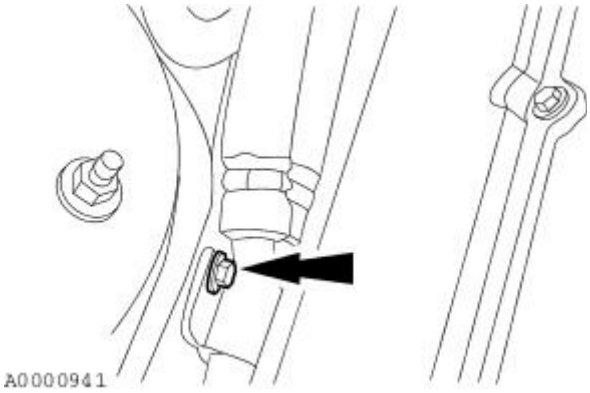


**10.** Detach the heater hose assembly bracket.

**11.** Raise and support vehicle.
For additional information, refer to Section 100-02 Jacking and Lifting.

**12.** Remove the heater hose assembly retaining bolt.

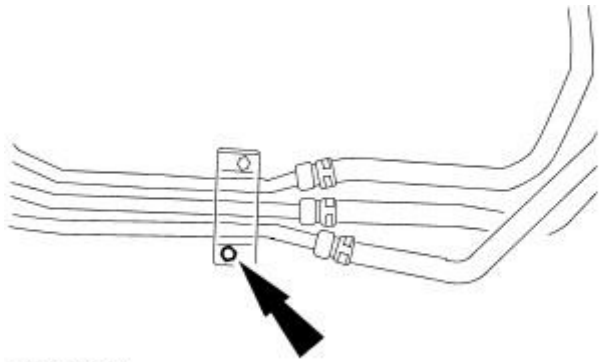


**13.** Lower the vehicle. Remove the heater hose assembly.

**14.** Remove the heater hose assembly.

## Installation

**1.** To install, reverse the removal procedure.

**2.** Tighten to 7 Nm.

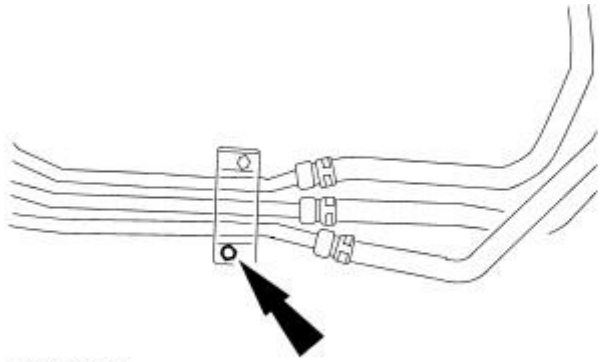


**3.** Tighten to 25 Nm.

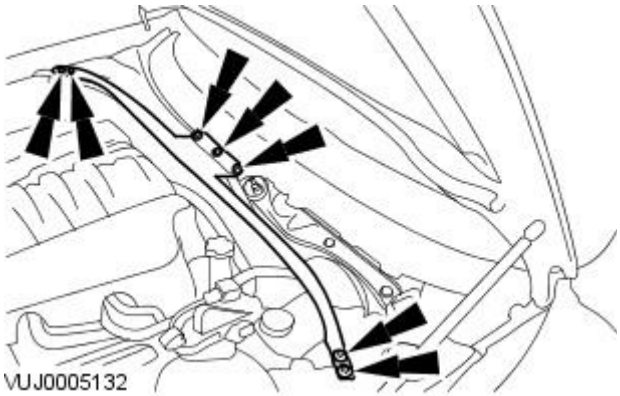


**4.** Carry out the cooling system filling and bleeding procedure. For additional information, refer to Section 303-03A Engine Cooling / 303-03B Supercharger Cooling / 303-03C Engine Cooling.

GETtheMANUALS.org

# Heating and Ventilation - Heater Core and Evaporator Core Housing

Disassembly and Assembly

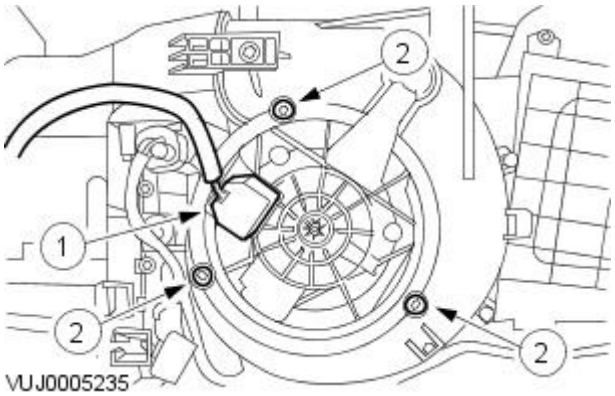


**1.** Remove the heater core and evaporator core housing.
For additional information, refer to Heater core and evaporator core housing in this section.

**2.** Remove the blower motor.

1. Disconnect the electrical connector.
2. Remove the blower motor.

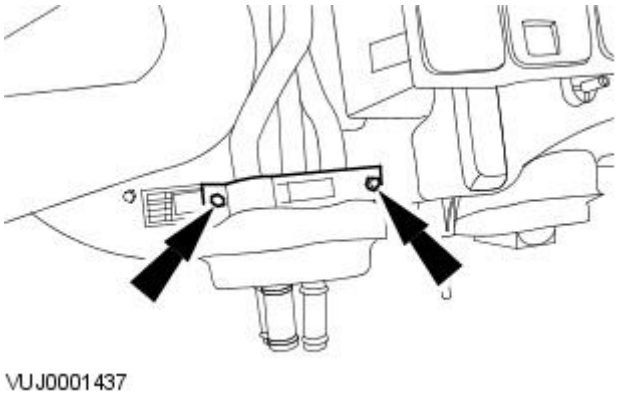


**3.** Remove the heater core pipe retaining bracket.

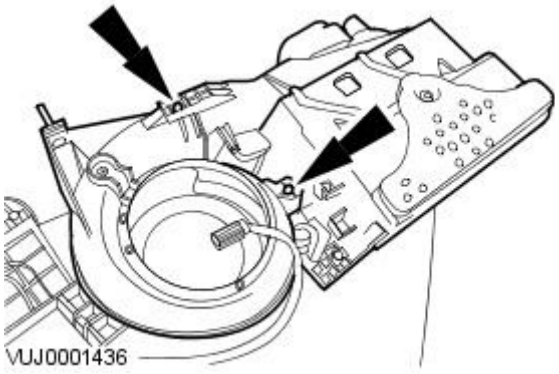


**4.** Remove the blower motor housing.

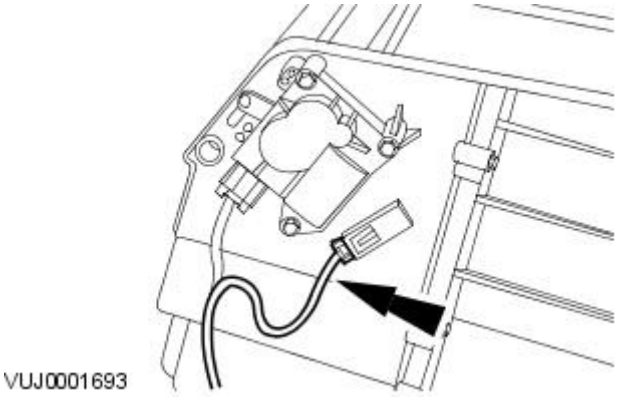


**5.** Disconnect the air discharge temperature sensor.

GETtheMANUALS.org

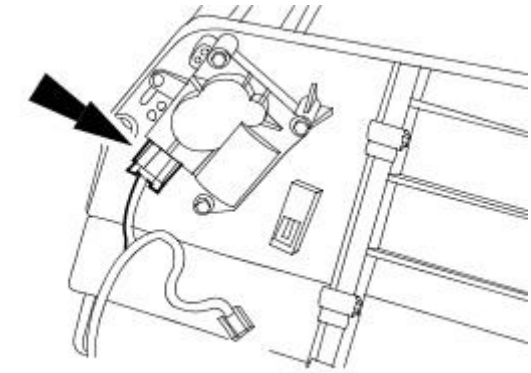

VUJ0005657

**6.** Disconnect the cold air bypass blend door actuator.

**7.** Remove the thermostatic expansion valve insulation.

**8.** Remove the heater core and evaporator core housing retaining bolts.

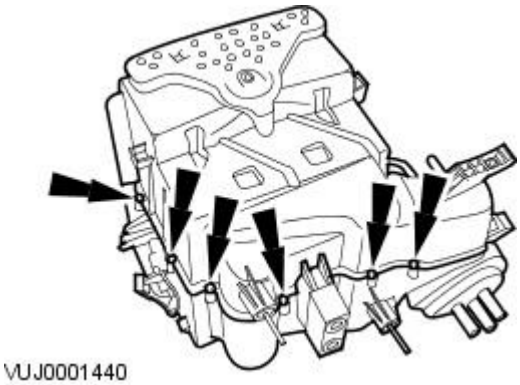

VUJ0001440

**9.** Remove the heater core and evaporator core housing retaining bolts.

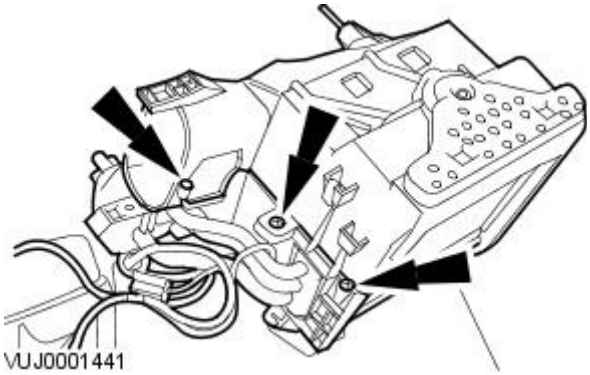

VUJ0001441

**10.** Remove the upper heater core and evaporator core housing..

- Detach the retaining tang.

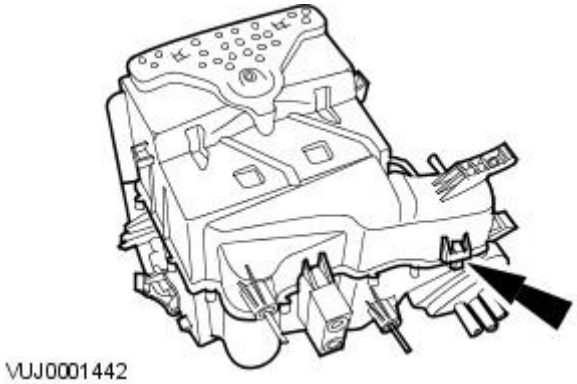

VUJ0001442

**11.** Remove the evaporator core.

1. Remove the heater core.
2. Remove the evaporator core.

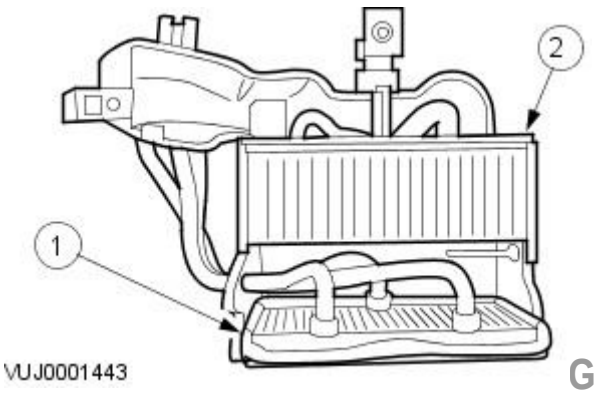


VUJ0001443

## Assembly

**1.** To assemble, reverse the disassembly procedure.

GETtheMANUALS.org

# Auxiliary Heating -

**Torque Specifications**

| Description | Nm | lb-ft | lb-in |
|---|---|---|---|
| Auxiliary heater retaining bolts | 17 | 13 | – |

GETtheMANUALS.org

# Auxiliary Heating - Auxiliary Heater

Description and Operation

The system consists of a fuel operated heater unit and a fuel dosing pump.

Fuel for the heater system is taken from the vehicle fuel tank, through a fuel line attached to the fuel pump module. Fuel is drawn from the fuel tank by the dosing pump to the heater unit. In the heater unit, the fuel delivered by the fuel pump is burned and the resultant heat output is used to heat the engine coolant.

An electronic control module integrated into the heater unit controls the operation of the heater unit and the dosing pump. The climate control unit controls the operation of the re-circulation flaps on initial start up.

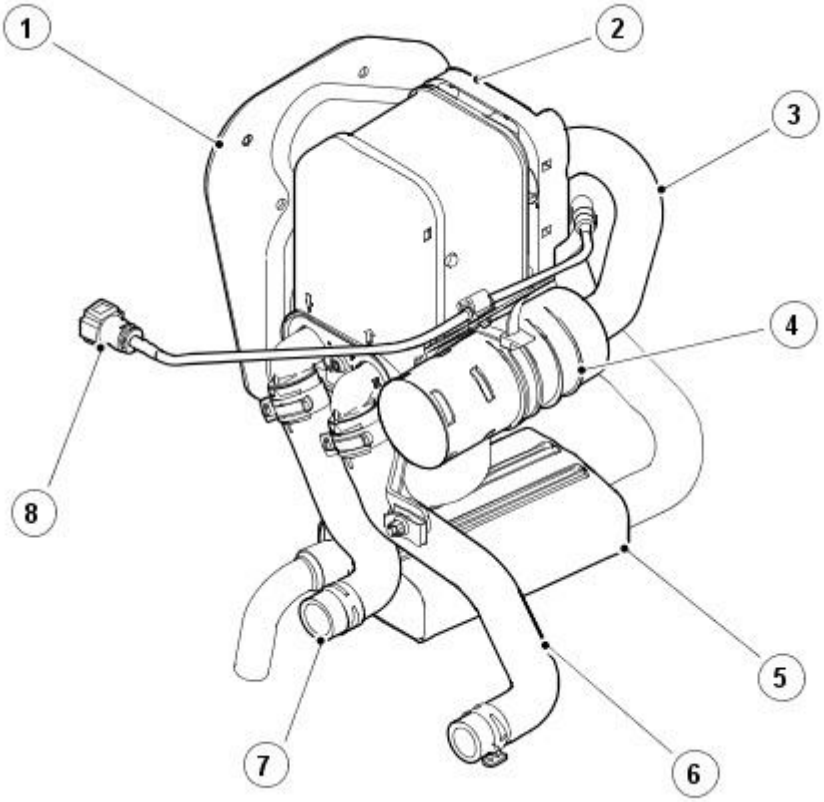


E52410

| Item | Part Number | Description |
|---|---|---|
| 1 | - | Auxiliary heater bracket |
| 2 | - | Auxiliary heater assembly |
| 3 | - | Air intake hose |
| 4 | - | Air intake silencer |
| 5 | - | Exhaust silencer assembly |
| 6 | - | Coolant outlet hose |
| 7 | - | Coolant inlet hose |
| 8 | - | Fuel line |

The auxiliary heater is located behind the left hand side of the front bumper and is accessed via the radiator splash shield.

The auxiliary heater operates in two stages. The system will only ever operate if the engine is running. The ambient temperature has to be below 10° C (50° F) and the coolant temperature has to be lower than 87° C (189° F) at the start of the journey.

The first stage will operate until the coolant temperature reaches 87° C (189° F), and it will then go to the second stage until the coolant temperature reaches 90° C (194° F). At this point the system will switch off. It will switch on again if the coolant temperature drops below 79° C (174° F).

The auxiliary heater will not operate if:

- the supply voltage is below 10.25V
- it is in 'fault lockout'

GETtheMANUALS.org

Published: 11-May-2011

# Auxiliary Heating - Auxiliary Heater

Diagnosis and Testing

1. **1.** For diagnosis and testing of the fuel-fired heater,
   REFER to: Fuel Fired Booster Heater (412-02B Auxiliary Heating, Diagnosis and Testing).

GETtheMANUALS.org

# Auxiliary Heating - Fuel Fired Booster Heater

Diagnosis and Testing

## Principles of operation

The auxiliary heater is a fuel-fired unit which can only operate when the engine is running, when the ambient temperature is below 10 degrees C (50 degreees F), and the coolant temperature is below 87 degrees C (189 degrees F) at the start of the journey.

There are two stages to the operation of the system:

Stage one (full power mode)

The system operates from cold until the coolant temperature reaches 87 degrees C (189 degrees F), when it switches to:

Stage two (half power mode)

The system operates from 87 degrees C (189 degrees F) until the coolant temperature reaches 90 degrees C (194 degrees F), at which point the system switches off.

The system will switch back on if the coolant temperature drops below 79 degrees C (174 degrees F).

The auxiliary heater will not operate if:

- The supply voltage is below 10.25 volts
- The system is in fault lock-out
- The fuel warning light is illuminated
- The coolant temperature is greater than 90 degrees
- The system does not receive a request from the climate control module

For additional information on the operation of the system.
REFER to: Auxiliary Heater (412-02B Auxiliary Heating, Description and Operation).

## Inspection and Verification

1. **1.** Verify the customer concern.
2. **2.** Visually inspect for obvious signs of mechanical or electrical damage.

| Mechanical | Electrical |
|---|---|
| • Fuel supply<br>• Coolant level<br>• Pipework<br>• Heater unit for damage, etc | • Fuses<br>• Connectors<br>• Harness<br>• Control module<br>• Auxiliary heater fuel pump |

3. **3.** If an obvious cause for an observed or reported concern is found, correct the cause (if possible) before proceeding to the next step
4. **4.** A function check option is available using the Jaguar approved diagnostic system. Run this check before condemning any part of the system.

## DTC index (fuel-fired heater)

| DTC | Description | Possible causes | Action |
|---|---|---|---|
| B1A00 | Checksum error | • Internal EEPROM corruption | Reprogramme the module using the Jaguar approved diagnostic system. |
| B1A00 | Low voltage | • Voltage below threshold | Check the battery, charge if necessary.<br>REFER to: Battery (414-01 Battery, Mounting and Cables, Diagnosis and Testing).<br>Check the charging system.<br>REFER to: Generator (414-02 Generator and Regulator, Diagnosis and Testing). |
| B1A00 | High voltage | • Voltage above threshold | Check the charging system.<br>REFER to: Generator (414-02 Generator and Regulator, Diagnosis and Testing).<br>Check to see if a boost charger has been used on the vehicle. Clear the DTC. |
| B1A00 | Module in lock-out mode | • Error detected in system | The error causing this code to set should also set a specific DTC. Check for other DTCs and rectify as necessary before clearing all codes. |
| B1D22 | Water temperature sensor | • Water temperature sensor circuit: short circuit to ground | Check the harness and connections to the auxiliary heater assembly. Clear the code and carry out the function check. If the code sets again, install a new auxiliary heater assembly.<br>REFER to: Auxiliary Heater (412-02B Auxiliary Heating, Removal and Installation). |
| B1D22 | Water temperature sensor | • Water temperature sensor circuit: short circuit to power<br>• Water temperature sensor circuit: open circuit | Check the harness and connections to the auxiliary heater assembly. Clear the code and carry out the function check. If the code sets again, install a new auxiliary heater assembly.<br>REFER to: Auxiliary Heater (412-02B Auxiliary Heating, Removal and Installation). |
| B1D23 | Overheat sensor | • Overheat sensor circuit: open circuit | Check the harness and connections to the auxiliary heater assembly. Clear the code and carry out the function check. If the code sets again, install a new auxiliary heater assembly.<br>REFER to: Auxiliary Heater (412-02B Auxiliary Heating, Removal and Installation). |
| B1D24 | Glow plug | • Glow plug circuit: short circuit to ground | Check the harness and connections to the auxiliary heater assembly. Clear the code and carry out the function check. If the code sets again, install a new auxiliary heater assembly.<br>REFER to: Auxiliary Heater (412-02B Auxiliary Heating, |

GETtheMANUALS.org

| DTC | Description | Possible causes | Action |
|---|---|---|---|
| | | | Removal and Installation). |
| B1D24 | Glow plug | • Glow plug circuit: short circuit to power<br>• Glow plug circuit: open circuit | Check the harness and connections to the auxiliary heater assembly. Clear the code and carry out the function check. If the code sets again, install a new auxiliary heater assembly. REFER to: Auxiliary Heater (412-02B Auxiliary Heating, Removal and Installation). |
| B1D25 | Auxiliary heater fuel pump | • Auxiliary heater fuel pump circuit: short circuit to ground | Carry out the operation check using the Jaguar approved diagnostic system. Listen for the auxiliary heater fuel pump operating. For auxiliary heater fuel pump supply circuit tests, GO to Pinpoint Test A. |
| B1D25 | Auxiliary heater fuel pump | • Auxiliary heater fuel pump circuit: short circuit to power<br>• Auxiliary heater fuel pump circuit: open circuit | Carry out the operation check using the Jaguar approved diagnostic system. For auxiliary heater fuel pump supply circuit tests, GO to Pinpoint Test B. |
| B1D26 | Combustion air fan | • Combustion air fan circuit: short circuit to ground<br>• Engine overload occurred | Check the harness and connections to the auxiliary heater assembly. Clear the code and carry out the function check. If the code sets again, install a new auxiliary heater assembly. REFER to: Auxiliary Heater (412-02B Auxiliary Heating, Removal and Installation). |
| B1D26 | Combustion air fan | • Combustion air fan circuit: short circuit to power<br>• Combustion air fan circuit: open circuit | Check the harness and connections to the auxiliary heater assembly. Clear the code and carry out the function check. If the code sets again, install a new auxiliary heater assembly. REFER to: Auxiliary Heater (412-02B Auxiliary Heating, Removal and Installation). |
| B1D26 | Combustion air fan | • Combustion air fan: blocking protection activated | Check the harness and connections to the auxiliary heater assembly. Clear the code and carry out the function check. If the code sets again, install a new auxiliary heater assembly. REFER to: Auxiliary Heater (412-02B Auxiliary Heating, Removal and Installation). |
| B1D26 | Combustion air fan | • Combustion air fan: hard round-trip detection | Check the harness and connections to the auxiliary heater assembly. Clear the code and carry out the function check. If the code sets again, install a new auxiliary heater assembly. REFER to: Auxiliary Heater (412-02B Auxiliary Heating, Removal and Installation). |
| B1D29 | Auxiliary heater fails to switch on | • No generation of flame, even after restart attempt<br>- Possible fuel supply issue (may be temporary, fuel 'slosh', parked on an incline, etc) | Check for other DTCs. Carry out the function check. If the function check fails with a 'no-start' DTC, access the auxiliary heater fuel pump and check the pump for 'ticking' as the function check runs. Check the fuel lines from the auxiliary heater fuel pump to the auxiliary heater assembly and from the auxiliary heater fuel pump to the fuel tank. Rectify as necessary. |
| B1D30 | No start in test mode. No generation of flame detected in test mode | • No flame detected in the combustion chamber during the function check<br>- This code will not set under normal use, only when the function check is being run. The most likely cause is lack of fuel at the auxiliary heater | Make sure there is sufficient fuel in the tank. Check the fuel lines. If the fuel line has been removed or replaced, prime the auxiliary heater as part of the function check. |
| B1D31 | Flame detected prior to normal operation | • Glow plug fault<br>• Glow plug circuit fault<br>- The resistance of the glow plug is above the value to suggest that a flame is present, but the heater is not operating | Clear the code and carry out the function check. If the code sets again, install a new auxiliary heater assembly. REFER to: Auxiliary Heater (412-02B Auxiliary Heating, Removal and Installation). |
| B1D32 | Flame interruption | • Flame interruption during the heating cycle (More than one instance)<br>- This suggests a fuel supply problem, most likely due to aeration of the fuel supply to the auxiliary heater<br>- May be temporary, fuel 'slosh', parked on an incline, etc | Clear the code and carry out the function check. If the function check fails with a 'no-start' DTC, access the auxiliary heater fuel pump and check the pump for 'ticking' as the function check runs. Check the fuel lines from the auxiliary heater fuel pump to the auxiliary heater assembly and from the auxiliary heater fuel pump to the fuel tank. Rectify as necessary. |
| B1D33 | Flame interruption during normal operation | • Flame interruption during the heating cycle (More than one instance)<br>- This suggests a fuel supply problem, most likely due to aeration of the fuel supply to the auxiliary heater<br>- May be temporary, fuel 'slosh', parked on an incline, etc | Clear the code and carry out the function check. If the function check fails with a 'no-start' DTC, access the auxiliary heater fuel pump and check the pump for 'ticking' as the function check runs. Check the fuel lines from the auxiliary heater fuel pump to the auxiliary heater assembly and from the auxiliary heater fuel pump to the fuel tank. Rectify as necessary. |
| B1D34 | System in lock-out mode | • The system has detected a serious fault and has locked out permanently<br>- The system will not restart until the codes are cleared | Check for other DTCs identifying the cause of the lock-out. Rectify the fault(s) and carry out the function check. **This DTC will also set if there is an internal overheat of the auxiliary heater (for which there is no separate DTC). Check the auxiliary coolant pump operation if this DTC is set.** |
| U0073 | CAN communications fault | • CAN messages are not available at the auxiliary heater<br>• The auxiliary heater cannot transmit CAN messages correctly | Check for CAN error codes in other modules. If there are no other CAN DTCs set, check the auxiliary heater connector and harness.<br>REFER to: Communications Network - VIN Range: N13089->N99999 (418-00, Diagnosis and Testing). |
| U0164 | No communication from the HVAC | • No communication on CAN for more than ten seconds<br>- This code can log if the ignition is turned off with the system in supplemental heat mode. Clear the | REFER to: Communications Network - VIN Range: N13089->N99999 (418-00, Diagnosis and Testing). |

GETtheMANUALS.org

| DTC | Description | Possible causes | Action |
|---|---|---|---|
| | | DTC and check for other codes before beginning detailed diagnosis based on this code alone | |
| U1A00 | Bus communication fault | • Network bus fault | REFER to: Communications Network - VIN Range: N13089->N99999 (418-00, Diagnosis and Testing). |
| U1A03 | Configuration mis-match | • VID block incorrectly configured for vehicle | Reconfigure using the Jaguar approved diagnostic system. |
| U1A446C | Low fuel warning | • Low fuel level detected | No action necessary. The auxiliary heater will not operate at low fuel levels. Refill with fuel, clear the DTC. |

## Pinpoint tests

CAUTION: When probing connectors to take measurements in the course of the pinpoint tests, use the adaptor kit, part number 3548-1358-00. Failure to follow this instruction may result in damage to the vehicle.

• NOTE: This section contains references to Parameter Identifiers (PIDs). Where the Jaguar approved diagnostic system is not available, a scantool may be used to access these PIDs, all of which give information, and some of which can be used to both read information and to activate components. The format of the information may vary, depending on the tool used.

• NOTE: When performing voltage or resistance tests, always use a digital multimeter (DMM) accurate to 3 decimal places, and with an up-to-date calibration certificate. When testing resistance, always take the resistance of the DMM leads into account.

• NOTE: Check and rectify basic faults before beginning diagnostic routines involving pinpoint tests.

• NOTE: If a DTC is detected, all DTCs must be cleared after the concern is repaired. Failure to clear all DTCs may cause driveability concerns.

### PINPOINT TEST A : AUXILIARY HEATER FUEL PUMP SUPPLY CIRCUIT SHORT CIRCUIT TO GROUND

| TEST CONDITIONS | DETAILS/RESULTS/ACTIONS |
|---|---|
| **A1: CHECK THE AUXILIARY HEATER FUEL PUMP SUPPLY CIRCUIT FOR SHORT CIRCUIT TO GROUND** | |
| 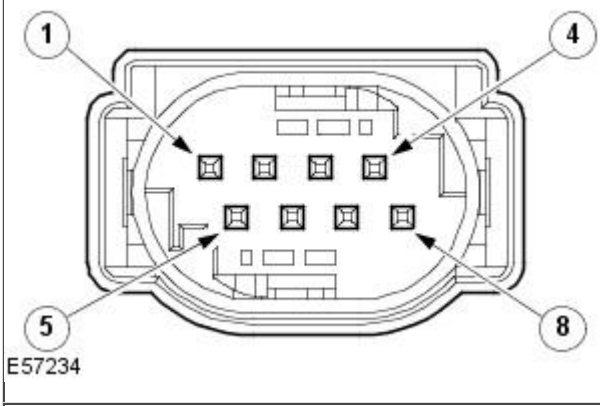 | **Auxiliary heater control module connector 1**<br>Circuit: Auxiliary heater fuel pump - supply (RW) — Pin: 05 |
| 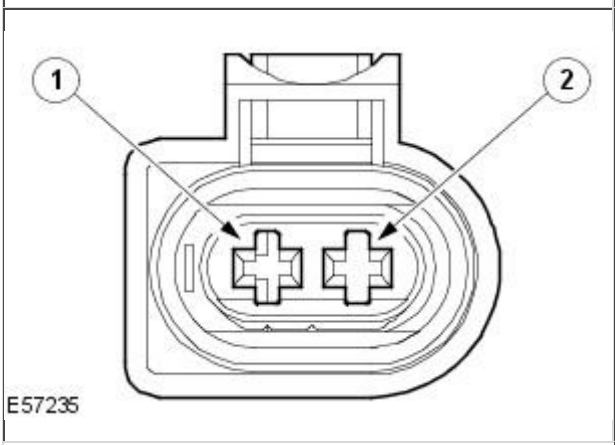 | **Auxiliary heater fuel pump connector**<br>Circuit: Auxiliary heater fuel pump - supply - (RW) — Pin: 01 |
| | 1 Key off.<br>2 Auxiliary heater module 1 connector disconnected.<br>3 Meaure the resistance between:<br>Auxiliary heater module 1 connector, harness side: Auxiliary heater fuel pump - supply - (RW) - Pin 05 — Vehicle battery: Negative post |
| | Is the resistance greater than 100 Kohms?<br>**Yes**<br>The following items have not been fully tested :- Auxiliary heater- Auxiliary heater module 1 connector<br>**No**<br>GO to A2. |
| **A2: CHECK THE AUXILIARY HEATER FUEL PUMP SUPPLY LINE FOR SHORT CIRCUIT TO GROUND** | |
| | 1 Auxiliary heater fuel pump connector disconnected.<br>2 Meaure the resistance between:<br>Auxiliary heater module 1 connector, harness side: Auxiliary heater fuel pump - supply - (RW) - Pin 05 — Vehicle battery: Negative post |

GETtheMANUALS.org

| | |
|---|---|
| | Is the resistance greater than 100 Kohms?<br>**Yes**<br>Install a new auxiliary heater fuel pump.<br>**No**<br>REPAIR the short circuit. For additional information, refer to the wiring diagrams. |

## PINPOINT TEST B : AUXILIARY HEATER FUEL PUMP SUPPLY CIRCUIT, SHORT CIRCUIT TO BATTERY OR OPEN CIRCUIT

| TEST CONDITIONS | DETAILS/RESULTS/ACTIONS |
|---|---|
| **B1: CHECK THE AUXILIARY HEATER FUEL PUMP SUPPLY LINE FOR SHORT CIRCUIT TO BATTERY** | |
| 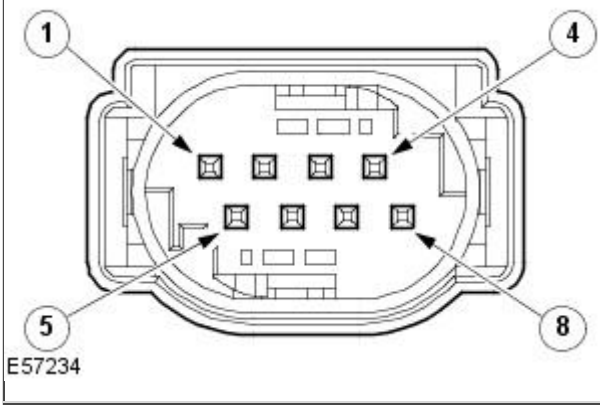 | **Auxiliary heater control module connector 1**<br>**Circuit** / **Pin**<br>Auxiliary heater fuel pump - supply (RW) / 05 |
| 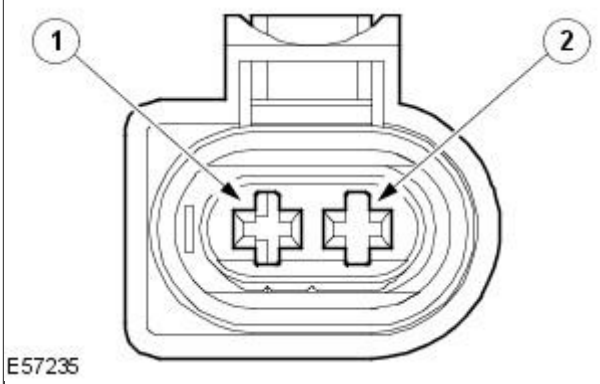 | **Auxiliary heater fuel pump connector**<br>**Circuit** / **Pin**<br>Auxiliary heater fuel pump - supply - (RW) / 01 |
| | 1 Key off.<br>2 Auxiliary heater module 1 connector disconnected.<br>3 Measure the resistance between:<br>**Auxiliary heater module 1 connector, harness side** / **Vehicle battery**<br>Auxiliary heater fuel pump - supply - (RW) - Pin 05 / Positive post |
| | Is the resistance greater than 100 Kohms?<br>**Yes**<br>GO to B2.<br>**No**<br>GO to B3. |
| **B2: CHECK THE AUXILIARY HEATER FUEL PUMP SUPPLY LINE FOR CONTINUITY** | |
| | 1 Auxiliary heater fuel pump connector disconnected.<br>2 Measure the resistance between:<br>**Auxiliary heater module 1 connector, harness side** / **Auxiliary heater fuel pump connector, harness side**<br>Auxiliary heater fuel pump - supply - (RW) - Pin 05 / Auxiliary heater fuel pump - supply - (RW) - Pin 01 |
| | Is the resistance less than 10 ohms?<br>**Yes**<br>The following items have not been fully tested :- Auxiliary heater module 1 connector- Auxiliary heater<br>**No**<br>REPAIR the open circuit. For additional information, refer to the wiring diagrams. |
| **B3: CHECK THE AUXILIARY HEATER FUEL PUMP SUPPLY LINE FOR SHORT CIRCUIT TO BATTERY** | |
| | 1 Auxiliary heater fuel pump connector disconnected.<br>2 Measure the resistance between:<br>**Auxiliary heater module 1 connector, harness side** / **Vehicle battery**<br>Auxiliary heater fuel pump - supply - (RW) - Pin 05 / Positive post |
| | Is the resistance greater than 100 Kohms?<br>**Yes**<br>Install a new auxiliary heater fuel pump.<br>**No**<br>REPAIR the short circuit. For additional information, refer to the wiring diagrams. |

GETtheMANUALS.org

# Auxiliary Heating - Auxiliary Heater

Removal and Installation

## Removal

1. Remove the fender splash shield.
   For additional information, refer to: Fender Splash Shield (501-02 Front End Body Panels, Removal and Installation).
2. Remove the radiator splash shield.

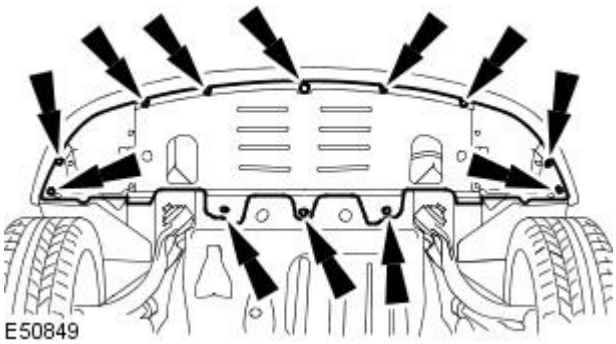


3. Using suitable hose clamping tools, clamp the fuel fired heater coolant hoses to minimise coolant loss.

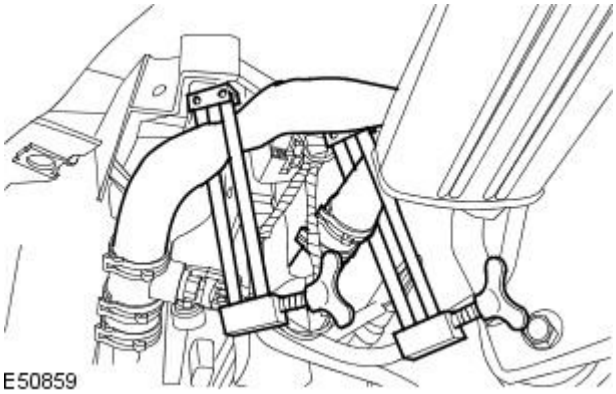


4. Disconnect the fuel fired heater electrical connectors.

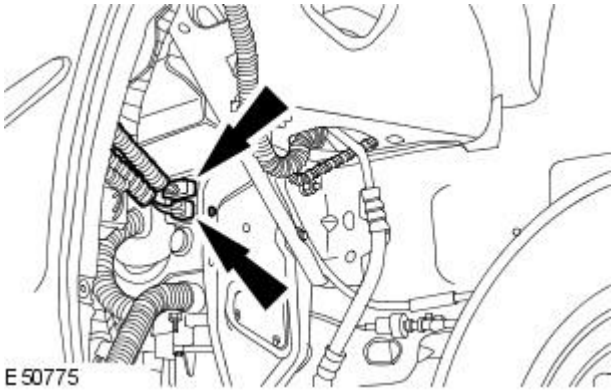


5. Disconnect the fuel fired heater fuel line.

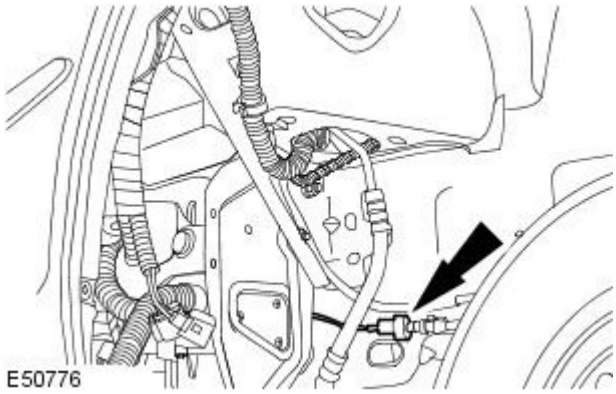


GETtheMANUALS.org

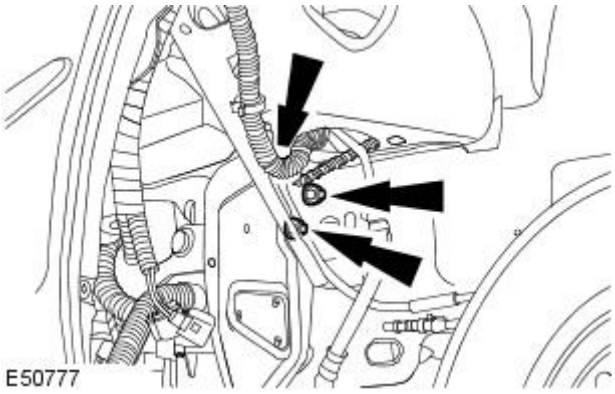


**6.** Remove the fuel fired heater retaining nuts.

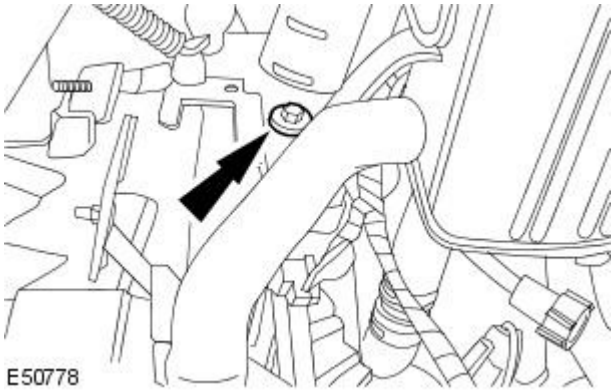


**7.** Detach the fuel fired heater.

- Remove the fuel fired heater retaining bolt.

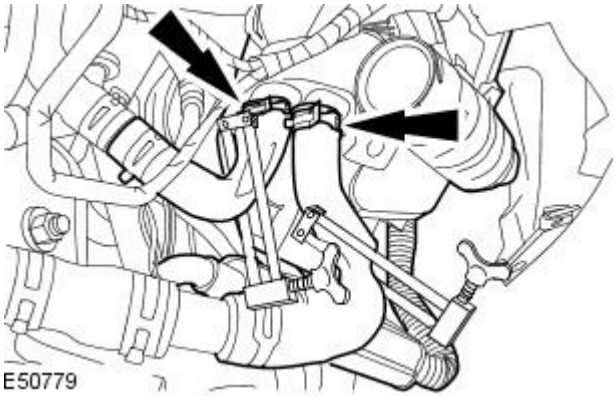


**8.** Remove the fuel fired heater.

- Disconnect the coolant hoses.

## Installation

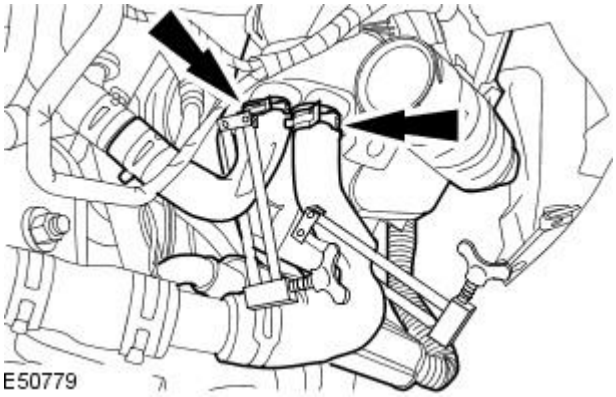


**1.** Install the fuel fired heater.

- Connect the coolant hoses.

GETtheMANUALS.org

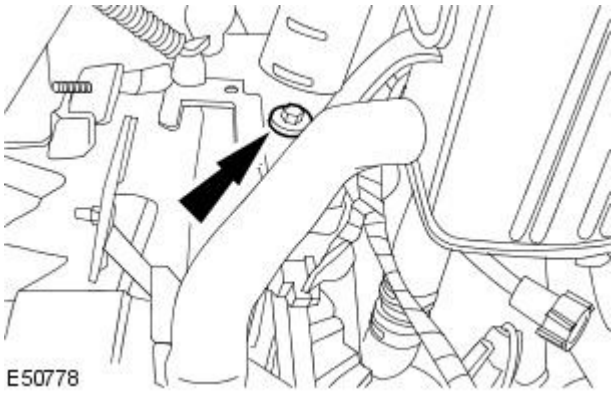


**2.** Attach the fuel fired heater.

- Install the fuel fired heater retaining bolt.

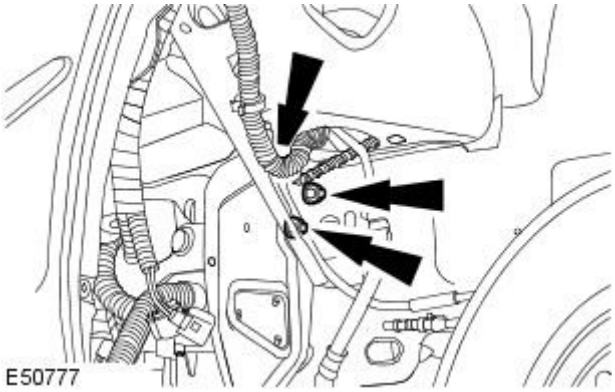


**3.** Install the fuel fired heater retaining nuts.

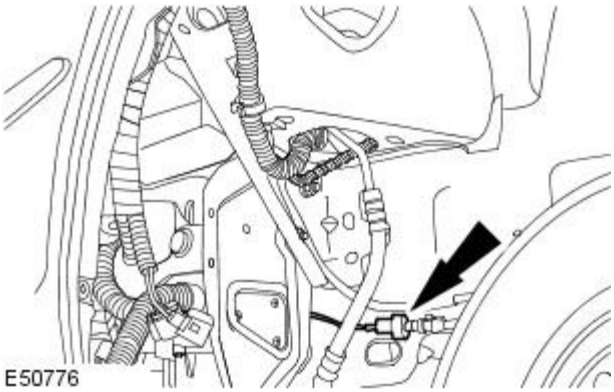


**4.** Connect the fuel fired heater fuel line.

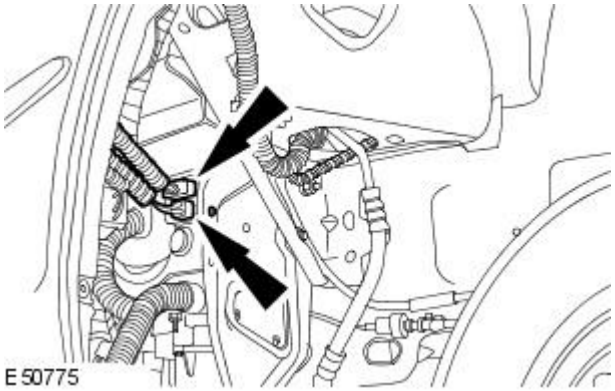


**5.** Connect the fuel fired heater electrical connectors.

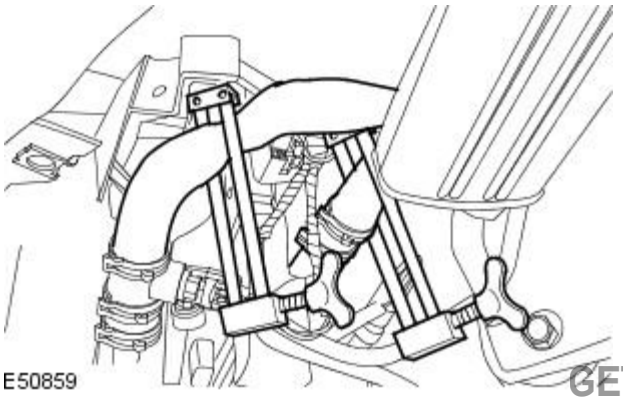


**6.** Remove the hose clamping tools.

GETtheMANUALS.org

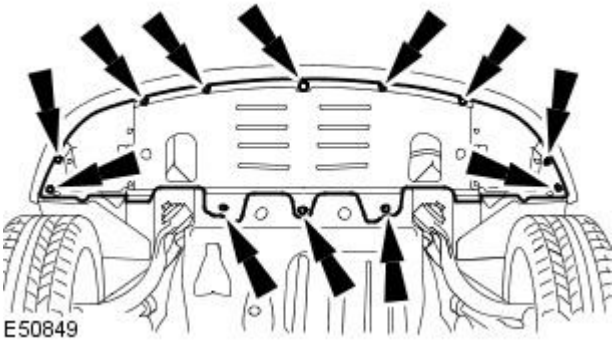


**7.** Install the radiator splash shield.

**8.** Install the fender splash shield.
For additional information, refer to: Fender Splash Shield (501-02 Front End Body Panels, Removal and Installation).

**9.** CAUTION: Do not RUN the engine with the coolant expansion tank pressure cap removed. Failure to follow this instruction may cause damage to the vehicle.

START and RUN the engine.

**10.** SET the heating system to MAX heat, the blower motor to MAX speed and the air distribution to instrument panel registers.

**11.** CAUTION: Observe the engine temperature gauge. If the engine starts to over-heat switch off immediately and allow to cool. Failure to follow this instruction may cause damage to the vehicle.

Allow the engine to RUN until hot air is emitted from the instrument panel registers, while observing the engine temperature gauge.

**12.** Switch off the engine.

**13.** Allow the engine to cool.

**14.** WARNING: Never remove the coolant pressure cap under any circumstances while the engine is operating. Failure to follow this instruction may result in personal injury. To avoid having scalding hot coolant or steam blow out of the cooling system, use extreme care when removing the coolant pressure cap from a hot cooling system. Wait until the engine has cooled, then wrap a thick cloth around the coolant pressure cap and turn it slowly until the pressure begins to release. Step back while the pressure is released from the system. When certain all the pressure has been released (still with a cloth) turn and remove the coolant pressure cap from the coolant expansion tank. Failure to follow these instructions may result in personal injury.

Release the cooling system pressure.

- Remove the coolant expansion tank pressure cap.

**15.** Fill the cooling system up to the MAX mark on the coolant expansion tank using a fifty percent mixture of Jaguar Premium Cooling System Fluid or equivalent, meeting Jaguar specification WSS M97B44-D and fifty percent water.

**16.** Install the coolant expansion tank pressure cap.

GETtheMANUALS.org

# Air Conditioning -

**Torque Specifications**

| Description | Nm | lb-ft | lb-in |
|---|---|---|---|
| Air conditioning (A/C) compressor clutch retaining nut | 26 | 19 | - |
| A/C compressor retaining bolts | 25 | 18 | - |
| A/C compressor manifold and tube retaining bolt | 20 | 15 | - |
| A/C condenser core retaining studs | 7 | - | 62 |
| A/C condenser core supply and return lines retaining nuts | 8 | - | 71 |
| Power steering oil cooler retaining nuts | 7 | - | 62 |
| A/C desiccant bag retaining screw | 22 | 16 | - |
| A/C pressure cutoff switch | 8 | - | 71 |

GETtheMANUALS.org

# Air Conditioning - Air Conditioning

Description and Operation

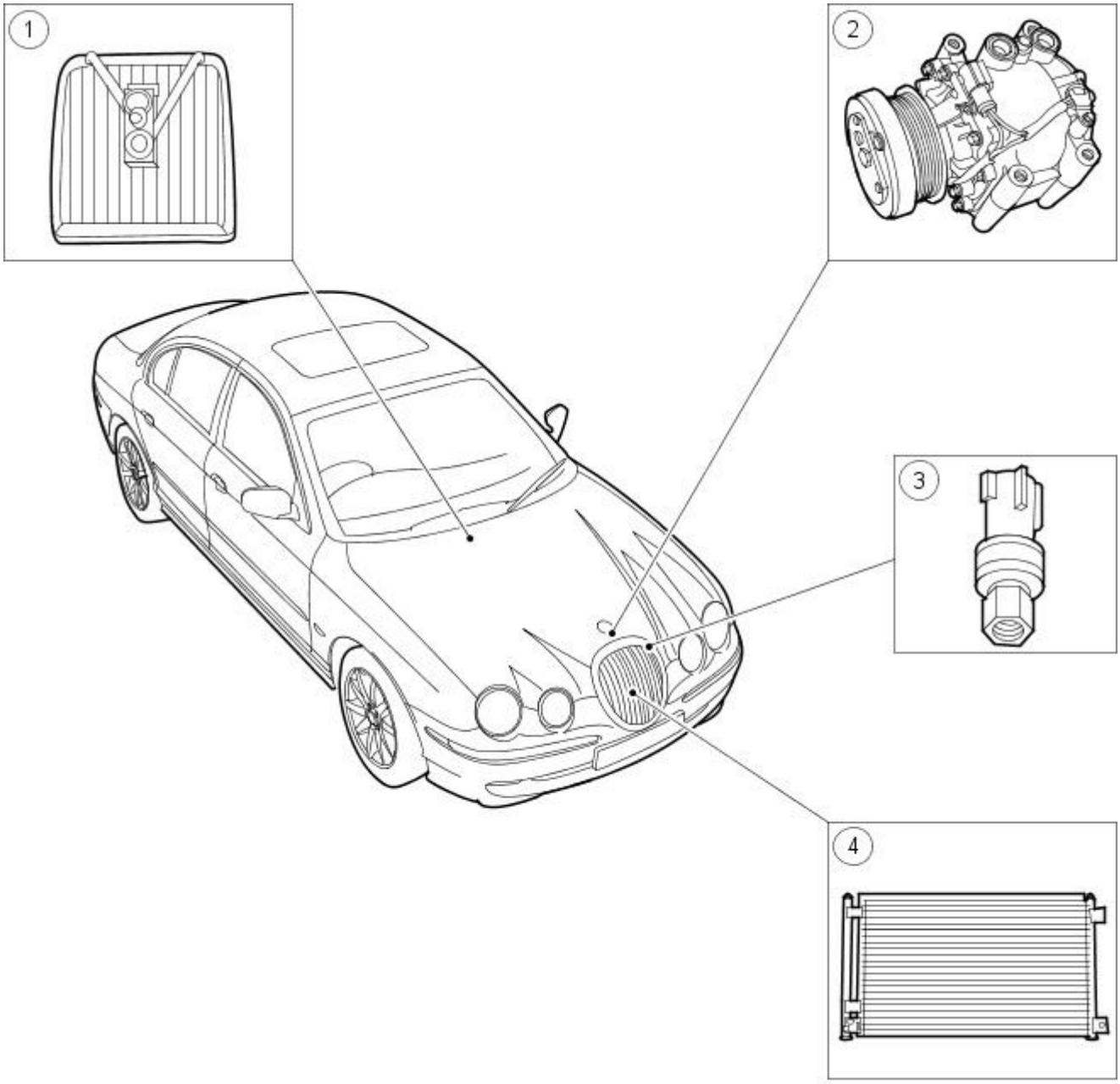


E30477

| Item | Part Number | Description |
|---|---|---|
| 1 | — | Evaporator core |
| 2 | — | Air conditioning (A/C) compressor |
| 3 | — | Pressure cutoff switch |
| 4 | — | Condenser core |

The air conditioning (A/C) system is a clutch cycling, thermostatic expansion valve type. The system components are:

- A/C Compressor
- Compressor clutch
- Condenser core
- Evaporator core
- Thermostatic expansion valve
- Desiccant bag
- Connecting refrigerant lines

The refrigeration system operation is controlled by the:

- Thermostatic expansion valve.
- Evaporator discharge temperature sensor.
- A/C Compressor relief valve.
- Pressure cut off switch.
- Engine control module (ECM)
- Climate control module

The refrigerant system incorporates a variable capacity A/C compressor. The A/C compressor clutch engagement is controlled by the ECM.

The DATC module monitors the evaporator discharge temperature sensor and communicates with the ECM to control clutch cycling. The DATC also monitors the ambient air temperature and disables A/C operation when the ambient air temperature is below 0° C (30°F).

The pressure switch is located in the A/C compressor discharge line and communicates with the ECM. If high or low refrigerant pressures are experienced , the ECM will interrupt A/C compressor operation.

GETtheMANUALS.org

The pressure relief valve is installed in the A/C compressor manifold and tube assembly and protects the system from excessively high refrigerant pressure.

The thermostatic expansion valve, which is mounted to the evaporator core supply and return lines, contains an adjustable orifice which provides the restriction that separates the high and low pressure liquid phases in the refrigerant system.

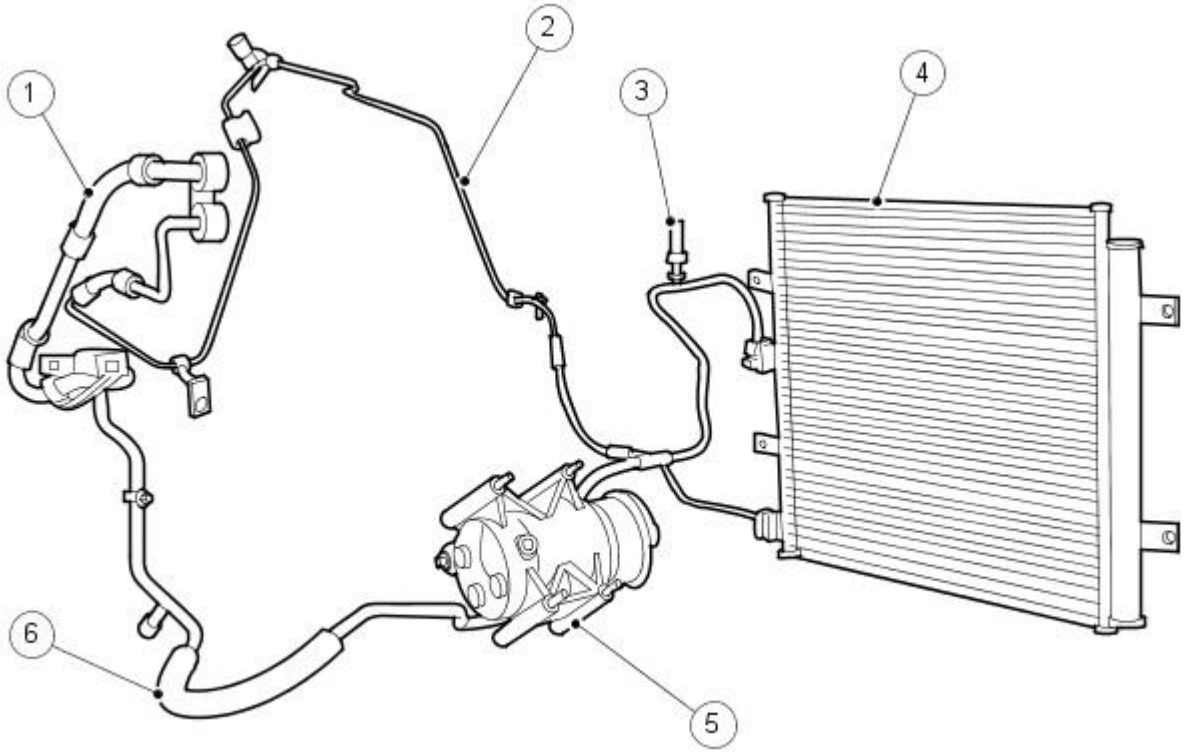


E30478

| Item | Part Number | Description |
|---|---|---|
| 1 | — | Manifold and tube assembly - thermostatic expansion valve |
| 2 | — | Tube assembly - condenser to thermostatic expansion valve |
| 3 | — | Pressure cutoff switch |
| 4 | — | Condenser core |
| 5 | — | A/C Compressor |
| 6 | — | Manifold and tube assembly - A/C compressor |

## A/C Compressor and Clutch Assembly

• NOTE: The internal A/C compressor components are not serviced separately. The A/C scroll compressor is serviced only as an assembly.

The A/C compressor has the following characteristics:

- A variable capacity function controlled by a suction pressure device.
- Vehicles fitted with 4.2L engine a displacement of 105cc.
- Vehicles fitted with 2.5L and 3.0L engine a displacement of 90cc.
- A fixed and orbiting scroll to provide refrigerant compression.
- A non-serviceable shaft seal.

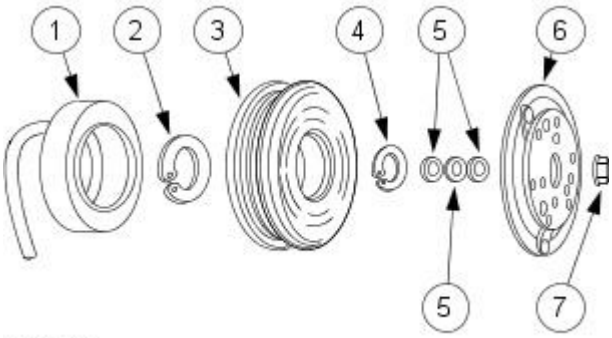


A0000907

| Item | Part Number | Description |
|---|---|---|
| 1 | — | Clutch field coil |
| 2 | — | Field coil snap ring |
| 3 | — | Clutch pulley |
| 4 | — | Pulley snap ring |
| 5 | — | Clutch hub spacer |
| 6 | — | Clutch |
| 7 | — | Clutch nut |

The magnetic A/C clutch has the following characteristics:

- It drives the compressor shaft.
- When battery positive voltage is applied to the A/C clutch field coil, the clutch disc and hub assembly is drawn toward the A/C clutch pulley.
- The magnetic force locks the clutch disc and hub assembly and the A/C clutch pulley together as one unit, causing the compressor shaft to rotate.

GETtheMANUALS.org

- When battery positive voltage is removed from the A/C clutch field coil, springs in the clutch disc and hub assembly move the clutch disc away from the A/C clutch pulley.

## A/C Compressor Pressure Relief Valve

An A/C compressor pressure relief valve is incorporated in the compressor A/C manifold and tube to:

- relieve unusually high refrigerant system discharge pressure buildups.
- prevent damage to the A/C compressor and other system components.
- avoid total refrigerant loss by closing after the excessive pressure has been relieved.

## Condenser Core

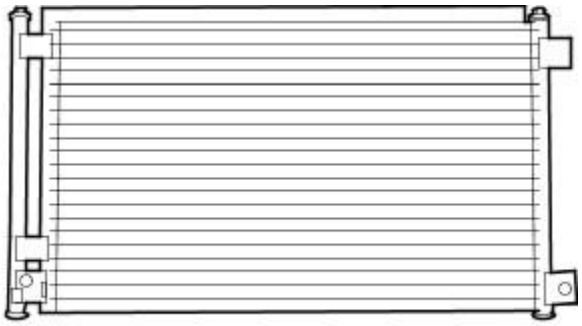

E30481

The A/C condenser core has the following characteristics:

- It is an aluminum fin and tube design heat exchanger located in front of the vehicle radiator.
- It cools compressed refrigerant gas by allowing air to pass over fins and tubes to extract heat and by condensing gas to liquid refrigerant as it is cooled.

- The tube assembly mounted on the side of the condenser core contains the desiccant bag.

## Desiccant bag

The desiccant bag removes any retained moisture in the A/C system. The A/C system has an R-134a leak trace dye wafer incorporated into the desiccant bag.

## Refrigerant Lines

The manifold and tube assembly - thermostatic expansion valve carries high pressure liquid to the thermostatic expansion valve and low pressure gas from the thermostatic expansion valve to the manifold and tube assembly-compressor.

The manifold and tube assembly - A/C compressor carries the high pressure gas from the A/C compressor to the condenser core. It also carries the low pressure gas received from the manifold and tube assembly-thermostatic expansion valve to the compressor, houses the low pressure service port and has a serviceable high pressure relief valve.

- The manifold and tube assembly - A/C compressor used vehicles with fitted 4.2L engine are are not interchangeable With vehicles fitted with 2.5L and 3.0L engine.

The tube assembly - condenser to thermostatic expansion valve carries high pressure liquid to the manifold and tube assembly-thermostatic expansion and houses the high pressure service port.

## Evaporator Core

The A/C evaporator core is the plate/fin type with a unique refrigerant flow path.

- A mixture of refrigerant and oil exits the thermostatic expansion valve (TXV) and enters the evaporator tank area through the 12.7 mm (0.5 in) tube.
- The tank area is divided into three sections: front inlet, front outlet and rear tank.
- The refrigerant enters the evaporator core tank area at the front inlet, flows down through the core and up the back side in a "U-flow" pattern.
- The refrigerant moves into the rear tank area and across to the other half of the core. The refrigerant moves down through the core and back up the front side of the core to the front outlet tank area.
- The refrigerant at this point is in a gaseous state. It exits the evaporator through the 16 mm (0.64 in) tube then passes through the TXV.

GETtheMANUALS.org

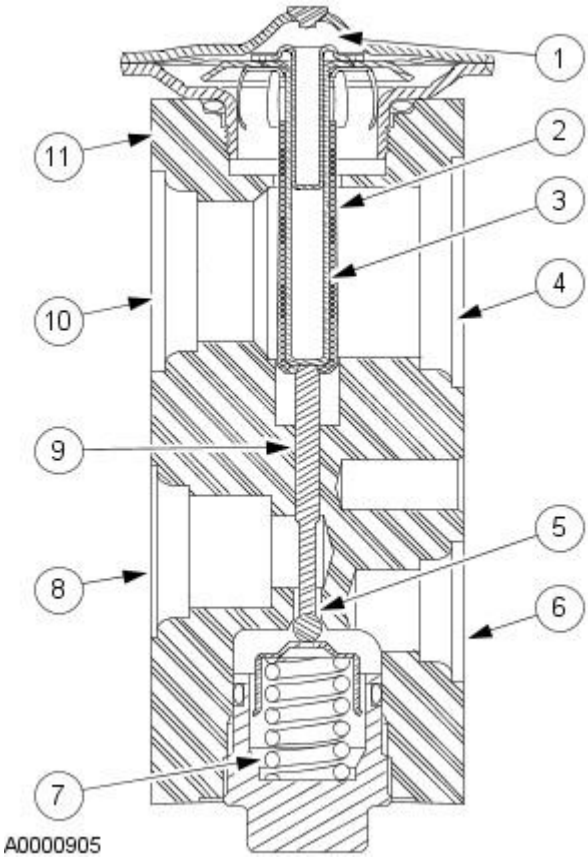


| Item | Part Number | Description |
|---|---|---|
| 1 | — | Sensing bulb |
| 2 | — | Insulator |
| 3 | — | Hollow core pin-type retainer |
| 4 | — | Outlet port—low pressure liquid |
| 5 | — | Metering orifice |
| 6 | — | Inlet port—high pressure liquid |
| 7 | — | Spring |
| 8 | — | Evaporator inlet port—low pressure liquid |
| 9 | — | Pin |
| 10 | — | Evaporator outlet port—low pressure gas |
| 11 | — | Housing |

The thermostatic expansion valve has the following characteristics:

- It is mounted on the evaporator core supply and return lines.
- It is a block-type valve.
- It contains an internal sensing bulb to increase the effectiveness of temperature sensing.
- It is not serviceable. A new thermostatic expansion valve must be installed as a unit.

## Pressure cutoff switch

The pressure cutoff switch monitors the A/C compressor discharge pressure and communicates with the ECM. The ECM will interrupt A/C compressor operation in the event that the pressure cutoff switch indicates high system discharge pressures. It is also used to sense no or low charge conditions. If the pressure is below a predetermined value for a given ambient temperature, the ECM will not allow the clutch to engage.

- The pressure cutoff switch is mounted on a Schrader-type valve fitting on the compressor to condenser discharge line.
- A valve depressor, located inside the threaded end of the pressure cutoff switch, presses on the Schrader valve stem and allows the pressure cutoff switch to monitor the compressor discharge pressure.
- When the compressor discharge pressure rises to approximately 2,896 kPa (420 psi), the ECM will interrupt the compressor clutch coil circuit and disengage the compressor.
- When the pressure drops to approximately 1,724 kPa (250 psi) the ECM will enable the A/C compressor circuit.
- Controls the signal to the ECM to control the fan speed.

## Service Gauge Port Valves

WARNING: Wear eye protection when opening/servicing the service gauge port valves.

The high-pressure service gauge port valve is located on the tube assembly - condenser to thermostatic expansion valve.

The low pressure service gauge port valve is located on the manifold and tube assembly - A/C compressor.

GETtheMANUALS.org

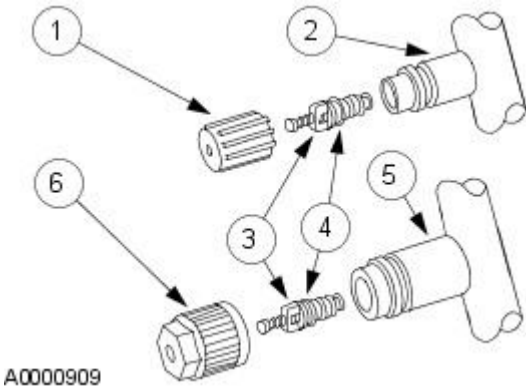


| Item | Part Number | Description |
|---|---|---|
| 1 | — | A/C charging valve cap |
| 2 | — | Low pressure service gauge port valve |
| 3 | — | Schrader-type valve |
| 4 | — | O-ring seal |
| 5 | — | High pressure service gauge port valve |
| 6 | — | A/C charging valve cap |

The fitting is an integral part of the refrigerant line or component.

- Special couplings are necessary for both the high side and low side service gauge ports.
- A new Schrader-type valve can be installed if the seal leaks
- Always install the A/C charging valve cap on the service gauge port valves after repairing the refrigerant system.

GETtheMANUALS.org

Published: 11-May-2011

# Air Conditioning - Air Conditioning

Diagnosis and Testing

For additional information refer toSection 412-00 Climate Control System - General Information

GETtheMANUALS.org

# Air Conditioning - Air Conditioning (A/C) Compressor2.5L NA V6 - AJV6/3.0L NA V6 - AJ27

Removal and Installation

## Removal

1. Carry out the air conditioning (A/C) system recovery procedure.
   For additional information, refer to: Air Conditioning (A/C) System Recovery, Evacuation and Charging (412-00 Climate Control System - General Information, General Procedures).
2. Disconnect the battery ground cable.
   For additional information, refer to: Battery Disconnect and Connect (414-01 Battery, Mounting and Cables, General Procedures).
3. Remove the air deflector.
   For additional information, refer to: Air Deflector (501-02 Front End Body Panels, Removal and Installation).
4. Detach the accessory drive belt.
   1. Rotate the accessory drive belt tensioner counter-clockwise.
      1. Use a 3/8 inch square drive bar to rotate the accessory drive belt tensioner.
   2. Detach the accessory drive belt.

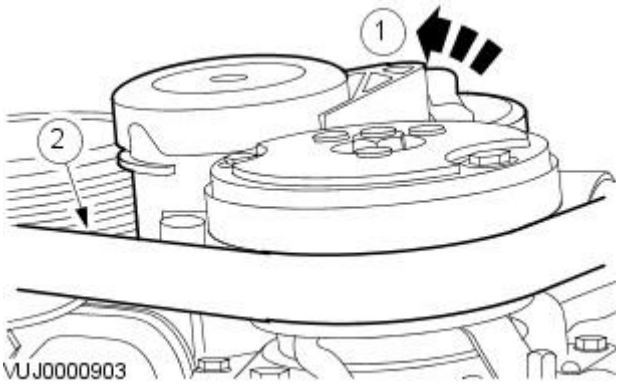


5. Disconnect the A/C compressor supply and return lines.
   - Remove and discard the A/C compressor O-ring seals.
   - Cap the exposed ports.

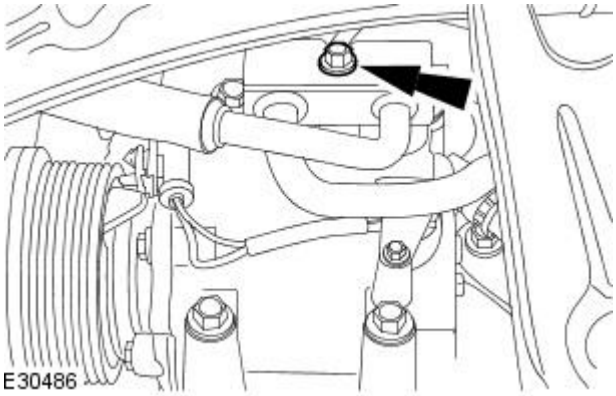


6. Disconnect the A/C compressor electrical connector.

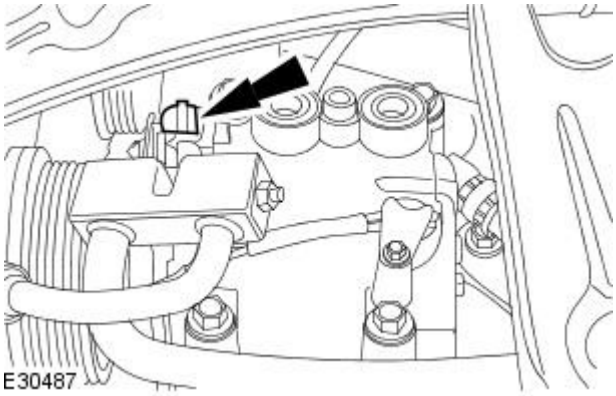


GETtheMANUALS.org

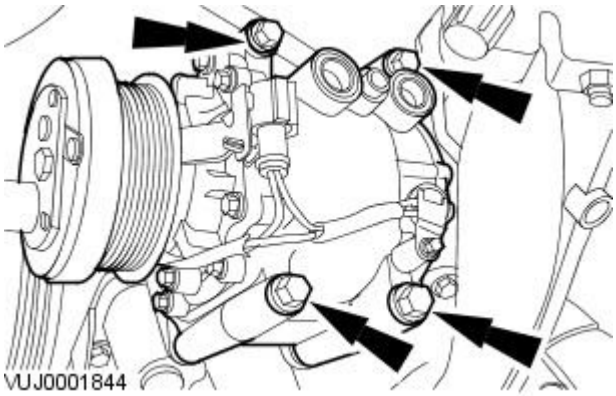


7. Remove the A/C compressor.

## Installation

1. Add the correct amount of A/C refrigerant oil to the A/C compressor. For additional information, refer to: Refrigerant Oil Adding (412-00 Climate Control System - General Information, General Procedures).
2. Install the A/C compressor.
   - Tighten to 25 Nm.

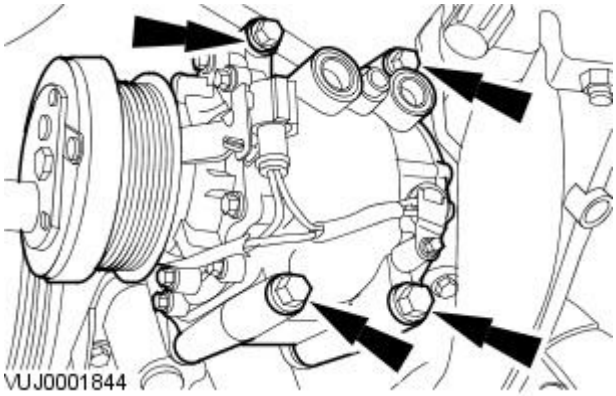


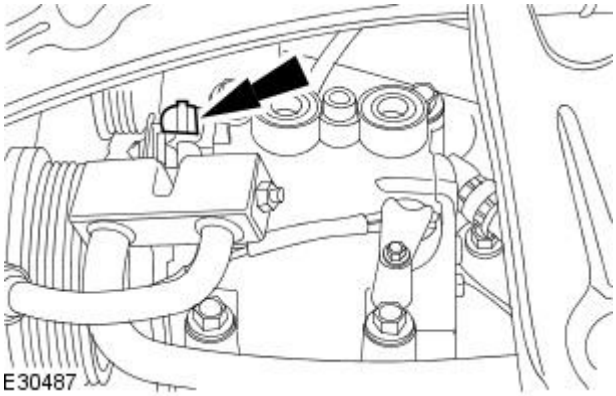


3. Connect the A/C compressor electrical connector.

4. NOTE: Un-cap the exposed ports.

   Install new A/C compressor O-ring seals.
   - Lubricate the new 0-ring seals with A/C refrigerant oil.
5. Clean off any oil residue that may contain A/C system flourescent dye.
6. Connect the A/C compressor supply and return lines.
   - Tighten to 20 Nm.

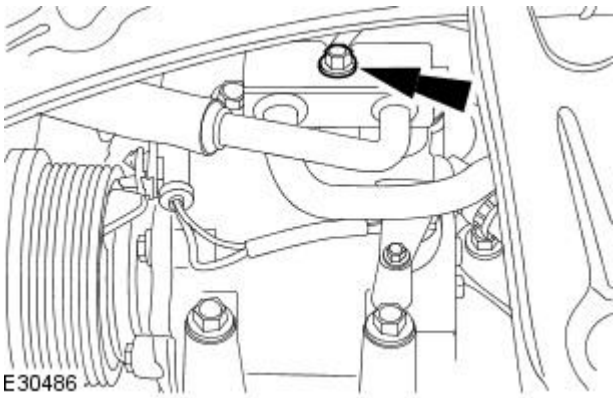


GETtheMANUALS.org

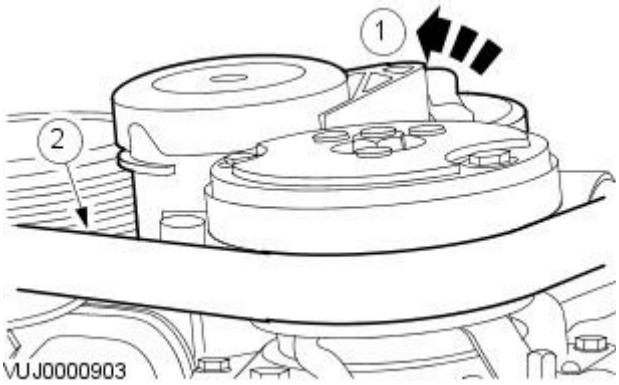


**7.** Attach the accessory drive belt.

1. Rotate the accessory drive belt tensioner counter-clockwise.
    1. Use a 3/8 inch square drive bar to rotate the accessory drive belt tensioner.
2. Attach the accessory drive belt.

**8.** Install the air deflector.
For additional information, refer to: Air Deflector (501-02 Front End Body Panels, Removal and Installation).

**9.** Connect the battery ground cable.
For additional information, refer to: Battery Connect (414-01 Battery, Mounting and Cables, General Procedures).

**10.** Carry out the A/C system evacuation and charging procedure.
For additional information, refer to: Air Conditioning (A/C) System Recovery, Evacuation and Charging (412-00 Climate Control System - General Information, General Procedures).

**11.** Carry out the A/C system flourescent dye leak detection procedure.
For additional information, refer to: Fluorescent Dye Leak Detection (412-00 Climate Control System - General Information, General Procedures).

GETtheMANUALS.org

# Air Conditioning - Air Conditioning (A/C) CompressorV8 4.2L Petrol/V8 S/C 4.2L Petrol

Removal and Installation

| Special Tool(s) | |
|---|---|
| 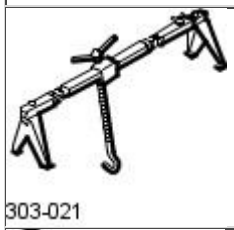 303-021 | Engine support beam.<br><br>303-021 |
| 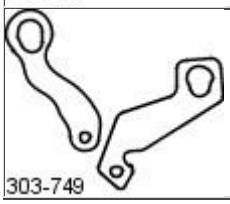 303-749 | Engine lifting brackets<br><br>303-749 |

## Removal

All vehicles

1. Carry out the air conditioning (A/C) system recovery procedure.
   For additional information, refer to: Air Conditioning (A/C) System Recovery, Evacuation and Charging (412-00 Climate Control System - General Information, General Procedures).
2. Disconnect the battery ground cable.
   For additional information, refer to: Battery Disconnect and Connect (414-01 Battery, Mounting and Cables, General Procedures).
3. Remove the left-hand wheel and tire assembly.
   For additional information, refer to: Wheel and Tire (204-04 Wheels and Tires, Removal and Installation).
4. Remove the air deflector.
   For additional information, refer to: Air Deflector (501-02 Front End Body Panels, Removal and Installation).
5. Reposition the drive belt splash shield.
   - Remove the drive belt splash shield retaining clip.

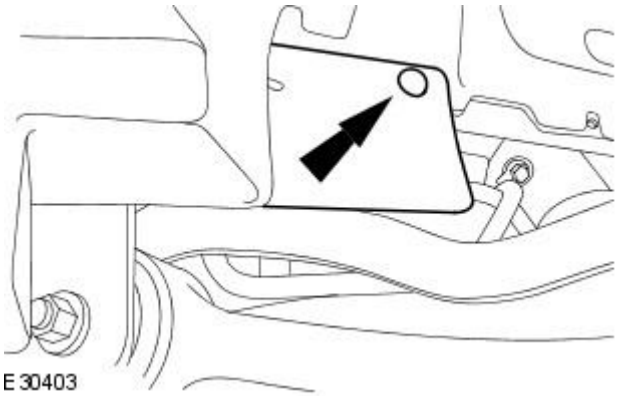

E30403

6. Disconnect the A/C compressor electrical connector.

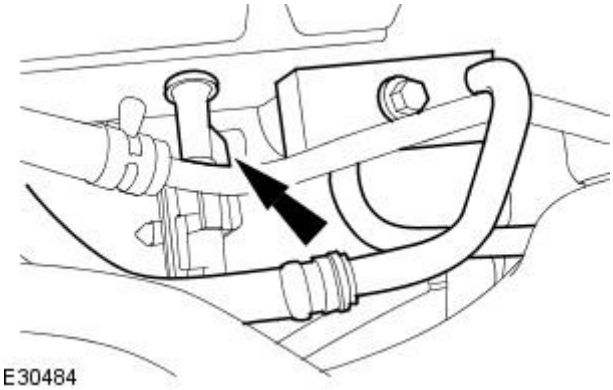

E30484

GETtheMANUALS.org

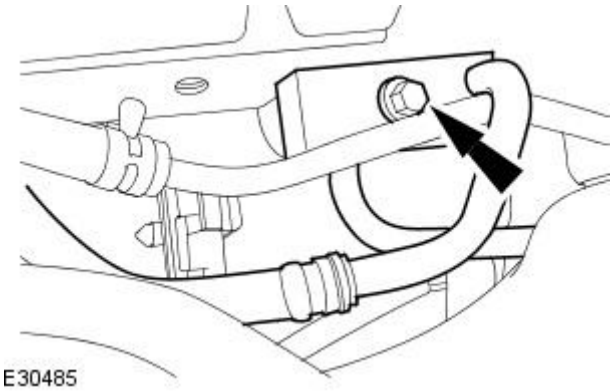


**7.** Detach the A/C compressor supply and return lines.

- Remove and discard the A/C compressor O-ring seals.
- Cap the exposed ports.

Left-hand drive vehicles

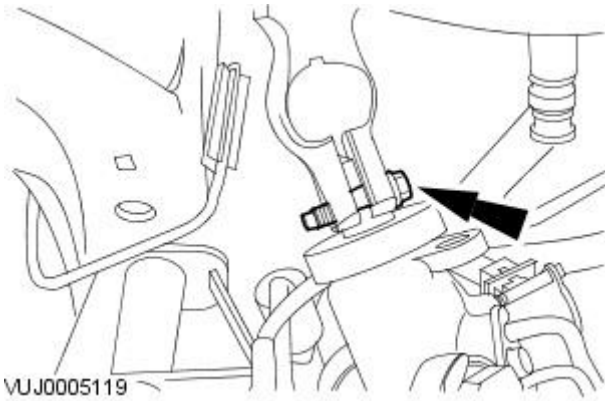


**8.** Remove the steering gear shaft pinch bolt.

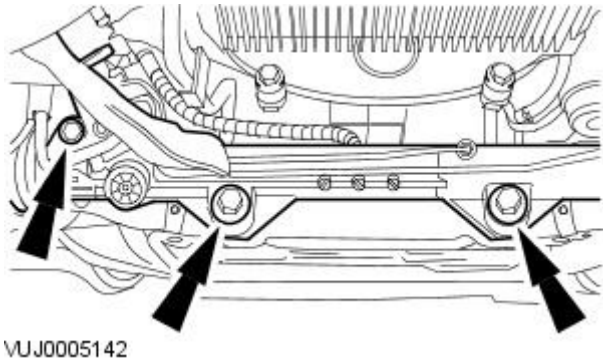


**9.** Detach the steering gear.

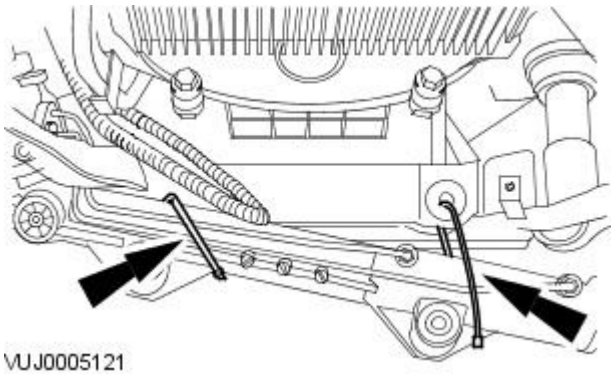


**10.** Secure the steering gear.

All vehicles

GETtheMANUALS.org

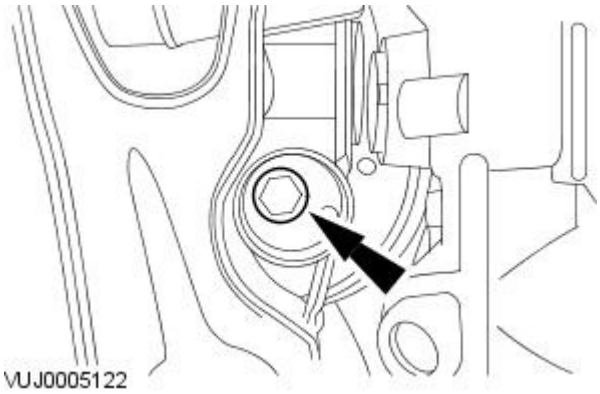


**11.** Remove the left-hand engine mounting lower retaining bolt.

**12.** Lower the vehicle.

**13.** Remove the air cleaner outlet pipe.
For additional information, refer to: Air Cleaner Outlet Pipe (303-12B Intake Air Distribution and Filtering - V8 4.2L Petrol/V8 S/C 4.2L Petrol, Removal and Installation).

**14.** Detach the accessory drive belt.

1. Rotate the accessory drive belt tensioner counter-clockwise.
   1. Use a 3/8 inch square drive bar to rotate the accessory drive belt tensioner.
2. Detach the accessory drive belt.

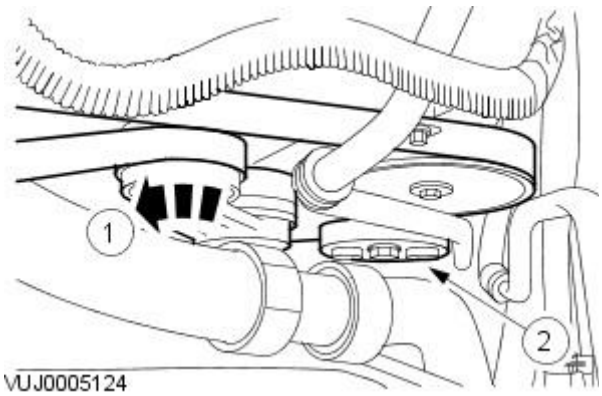


Vehicles without supercharger

**15.** Remove the throttle body. For additional information, refer to: (303-04B Fuel Charging and Controls - V8 4.2L Petrol/V8 S/C 4.2L Petrol)

Throttle Body - Vehicles Without: Supercharger, VIN Range: M45255->N52047 (Removal and Installation),
Throttle Body - Vehicles Without: Supercharger, VIN Range: N52048->N99999 (Removal and Installation).

All vehicles

**16.** Install the engine left-hand lifting eye.

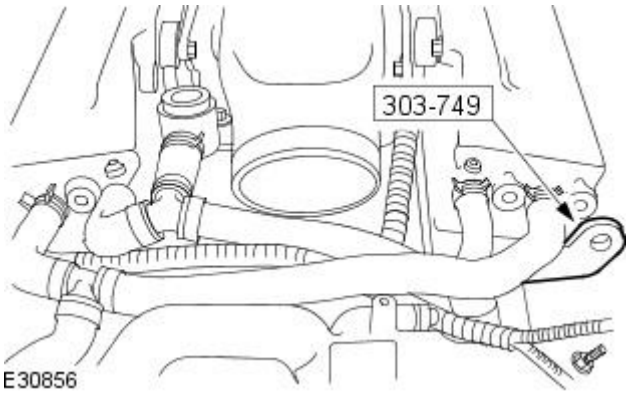


GETtheMANUALS.org

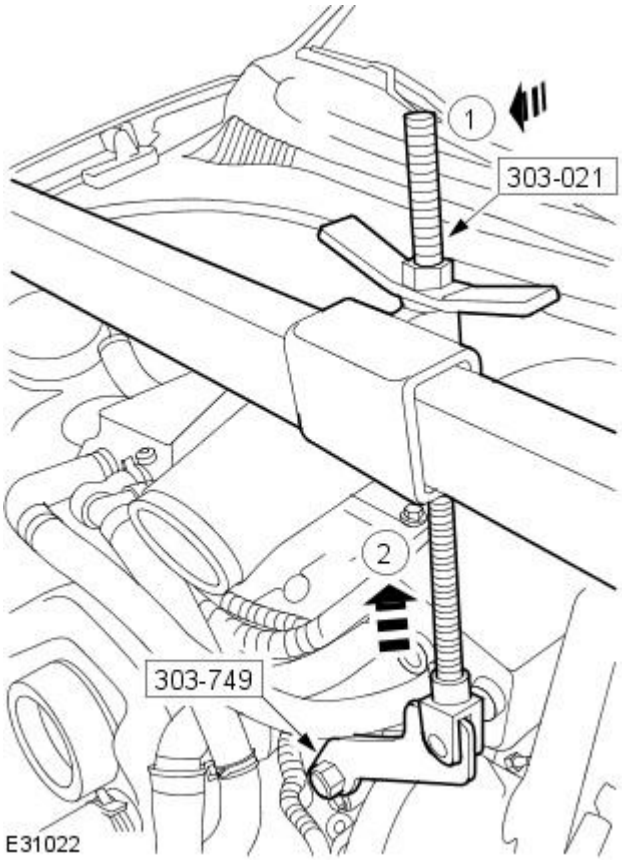


**17.** Using the special tools, raise the engine to a suitable height.

**18.** Raise the vehicle.

**19.** Remove the engine mounting and bracket assembly.

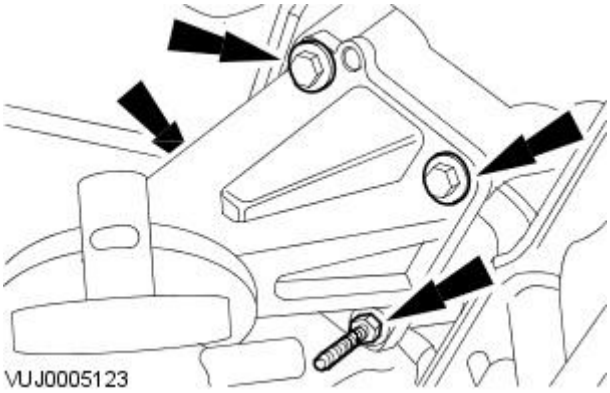


**20.** Lower the vehicle.

**21.** Remove the A/C compressor lower left-hand retaining bolt.

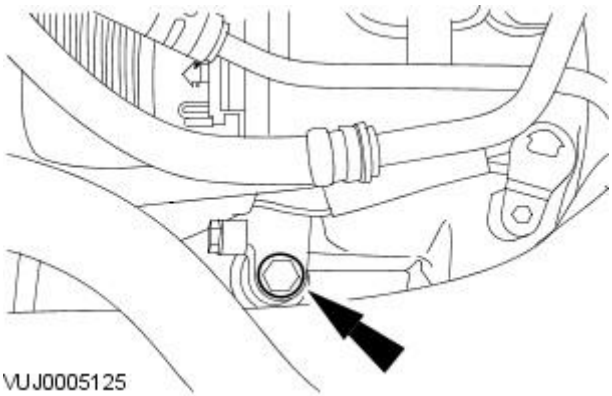


GETtheMANUALS.org

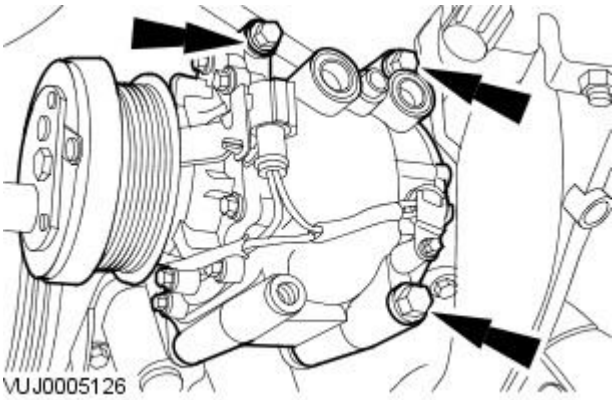


**22.** Remove the A/C compressor.

## Installation

All vehicles

**1.** Add the correct amount of A/C refrigerant oil to the A/C compressor. For additional information, refer to: Refrigerant Oil Adding (412-00 Climate Control System - General Information, General Procedures).

**2.** Install the A/C compressor.

- Tighten to 25 Nm.

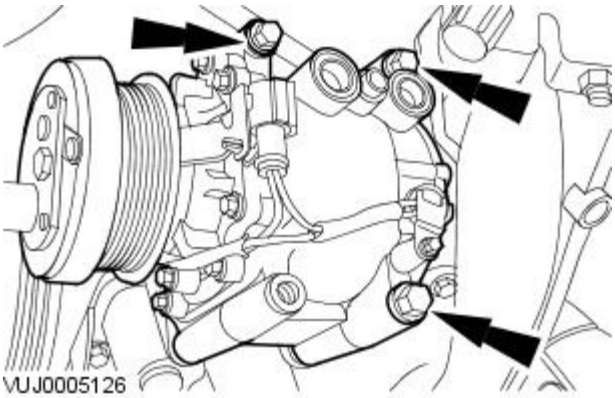


**3.** Install the A/C compressor lower left-hand retaining bolt.

- Tighten to 25 Nm.

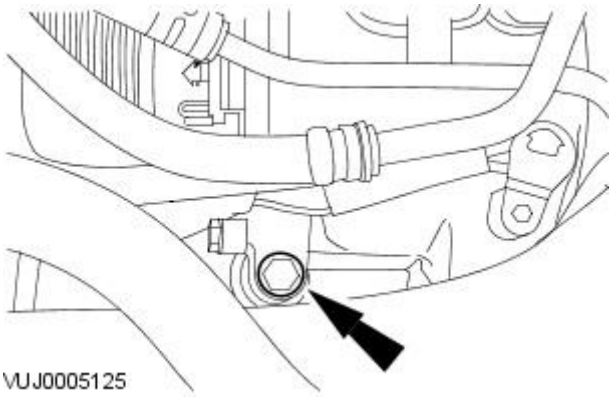


**4.** Raise the vehicle.

**5.** Install the engine mounting and bracket assembly.

- Tighten to 25 Nm.

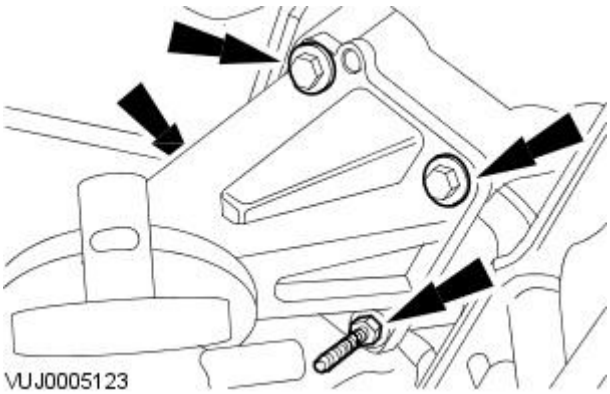


**6.** Lower the vehicle.

GETtheMANUALS.org

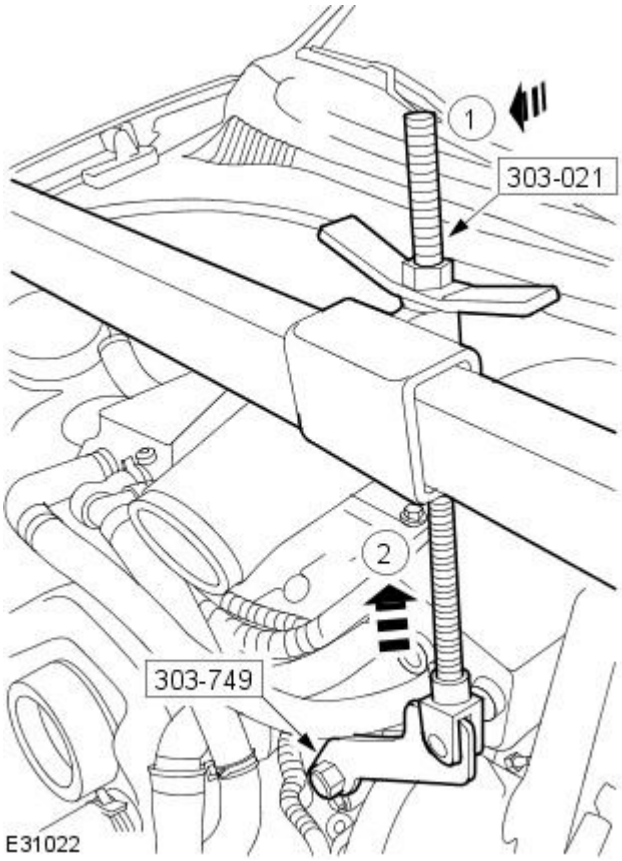


**7.** Using the special tools, lower the engine.

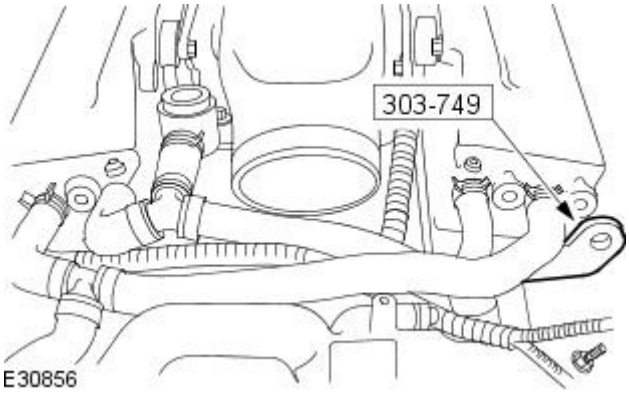


**8.** Remove the engine left-hand lifting eye.

Vehicles without supercharger

**9.** Install the throttle body. For additional information, refer to: (303-04B Fuel Charging and Controls - V8 4.2L Petrol/V8 S/C 4.2L Petrol)

Throttle Body - Vehicles Without: Supercharger, VIN Range: M45255->N52047 (Removal and Installation),
Throttle Body - Vehicles Without: Supercharger, VIN Range: N52048->N99999 (Removal and Installation).

All vehicles

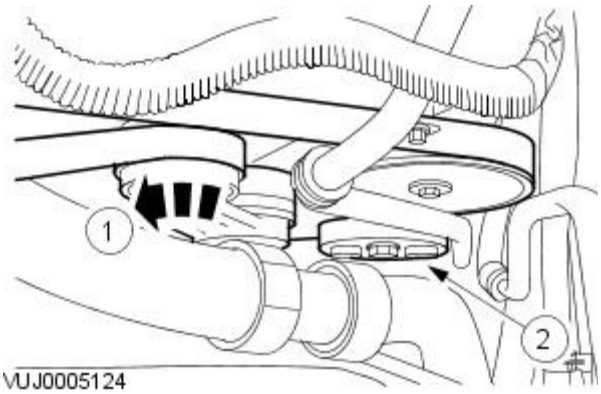


**10.** Attach the accessory drive belt.

1. Rotate the accessory drive belt tensioner counter-clockwise.
   1. Use a 3/8 inch square drive bar to rotate the accessory drive belt tensioner.
2. Attach the accessory drive belt.

**11.** Install the air cleaner outlet pipe.
For additional information, refer to: Air Cleaner Outlet Pipe (303-12B Intake Air Distribution and Filtering - V8 4.2L Petrol/V8 S/C 4.2L Petrol, Removal and Installation).

GETtheMANUALS.org

**12.** Raise the vehicle.

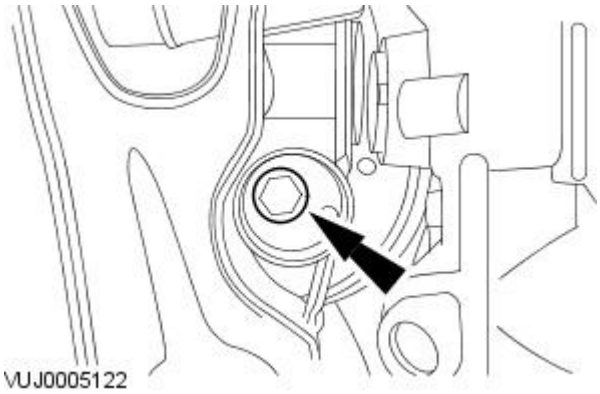


**13.** Install the left-hand engine mounting lower retaining bolt.

- Tighten to 63 Nm.

Left-hand drive vehicles

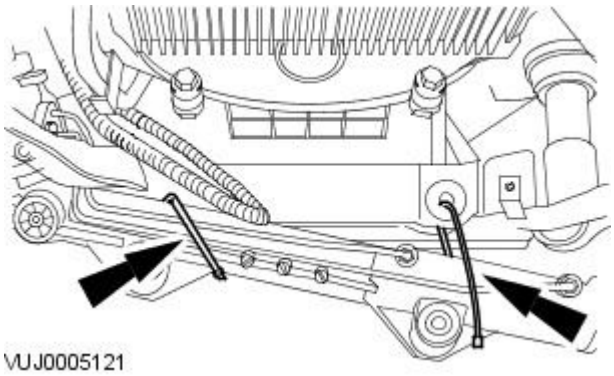


**14.** Detach the steering gear.

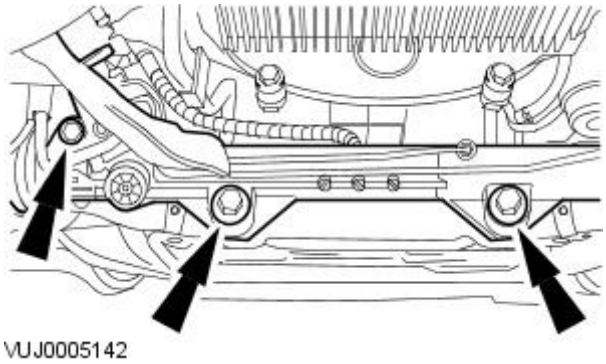


**15.** Attach the steering gear.

- Tighten to 100 Nm.

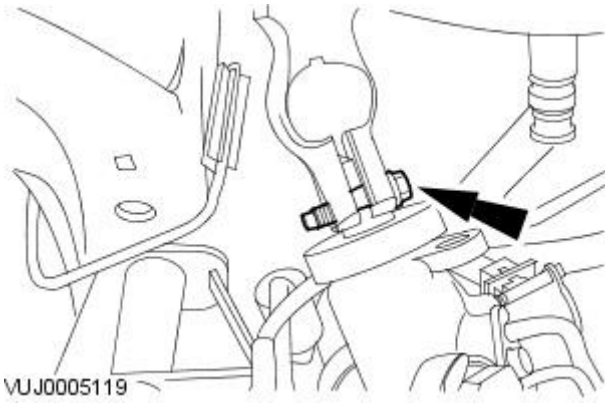


**16.** Install the steering gear shaft pinch bolt.

- Tighten to 35 Nm.

All vehicles

**17.** NOTE: Un-cap the exposed ports.

Install new A/C compressor O-ring seals.

- Lubricate the new O-ring seals with A/C refrigerant oil.

GETtheMANUALS.org

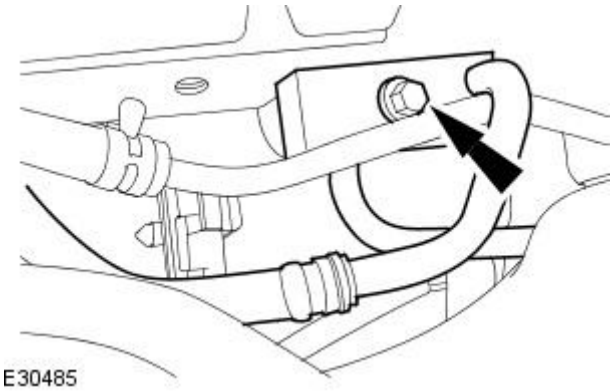


**18.** Attach the A/C compressor supply and return lines.

- Tighten to 20 Nm.

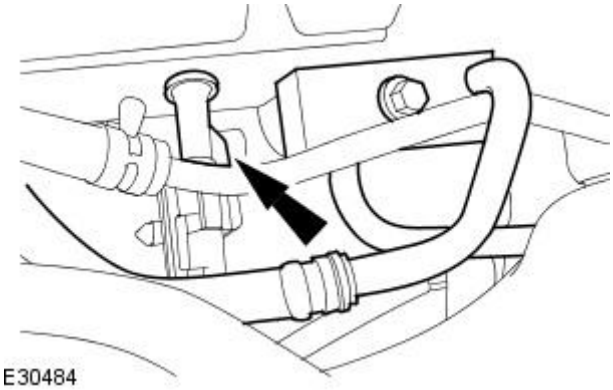


**19.** Connect the A/C compressor electrical connector.

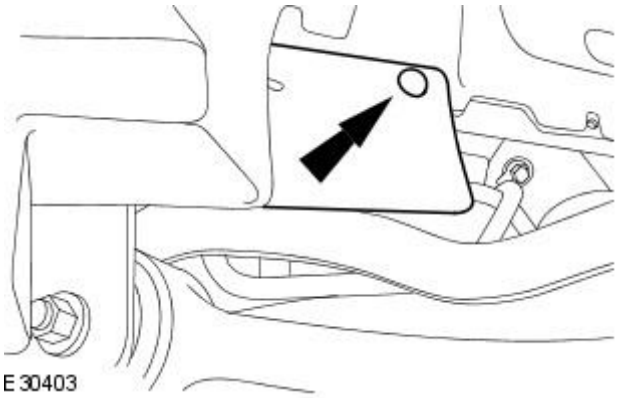


**20.** Clean off any oil residue that may contain A/C system flourescent dye.

**21.** Reposition the drive belt splash shield.

- Install the drive belt splash shield retaining clip.

**22.** Install the air deflector.
For additional information, refer to: Air Deflector (501-02 Front End Body Panels, Removal and Installation).

**23.** Install the left-hand front wheel and tire assembly.
For additional information, refer to: Wheel and Tire (204-04 Wheels and Tires, Removal and Installation).

**24.** Connect the battery ground cable.
For additional information, refer to: Battery Connect (414-01 Battery, Mounting and Cables, General Procedures).

**25.** Carry out the A/C system evacuation and charging procedure.
For additional information, refer to: Air Conditioning (A/C) System Recovery, Evacuation and Charging (412-00 Climate Control System - General Information, General Procedures).

**26.** Carry out the A/C system flourescent dye leak detection procedure.
For additional information, refer to: Fluorescent Dye Leak Detection (412-00 Climate Control System - General Information, General Procedures).

GETtheMANUALS.org

# Air Conditioning - Air Conditioning (A/C) Compressor2.7L V6 - TdV6

Removal and Installation

## Removal

All vehicles

1. Carry out the air conditioning (A/C) system recovery procedure.
   For additional information, refer to: Air Conditioning (A/C) System Recovery, Evacuation and Charging (412-00 Climate Control System - General Information, General Procedures).
2. Disconnect the battery ground cable.
   For additional information, refer to: Battery Disconnect and Connect (414-01 Battery, Mounting and Cables, General Procedures).
3. Remove the accessory drive belt.
   For additional information, refer to: Accessory Drive Belt - 2.7L V6 - TdV6 (303-05 Accessory Drive, Removal and Installation).
4. Disconnect the turbocharger to charge air cooler tube.

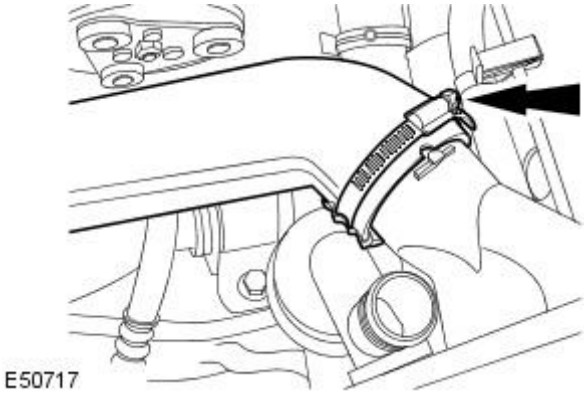


5. Remove the cooling fan motor and shroud.
   For additional information, refer to: Cooling Fan Motor and Shroud (303-03C Engine Cooling - 2.7L V6 - TdV6, Removal and Installation).

Vehicles with automatic transmission

6. Remove the transmission fluid cooler.
   For additional information, refer to: Transmission Fluid Cooler (307-02 Transmission/Transaxle Cooling, Removal and Installation).

All vehicles

7. Remove the turbocharger to charge air cooler.

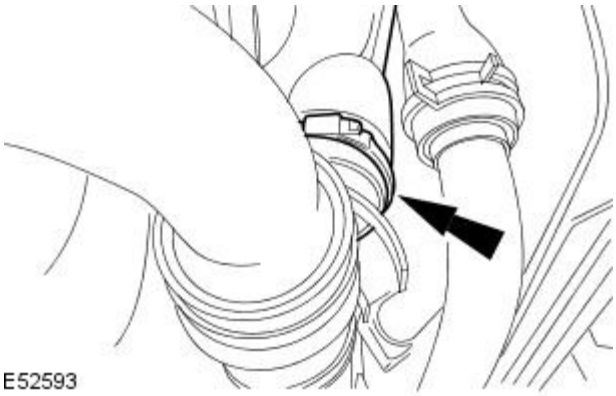


8. Disconnect the air cleaner lower outlet tube.

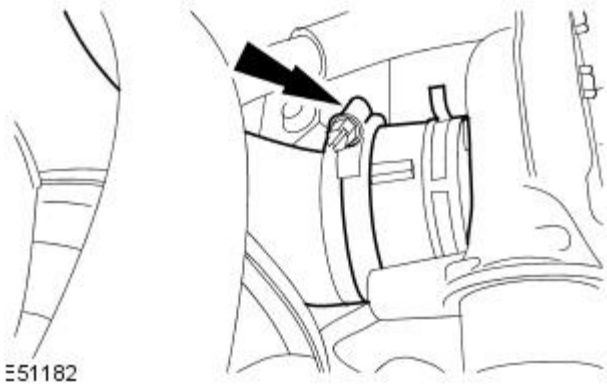


GETtheMANUALS.org

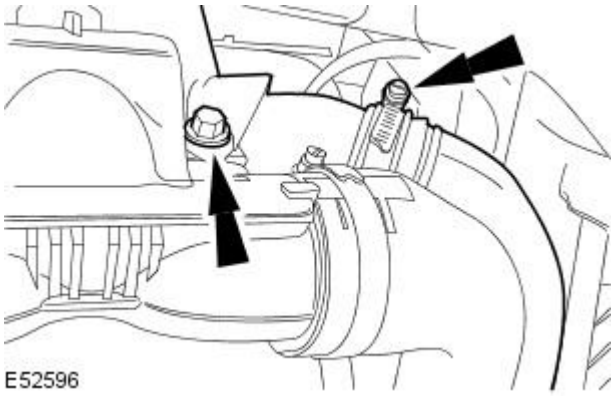


**9.** Remove the air cleaner upper outlet tube.

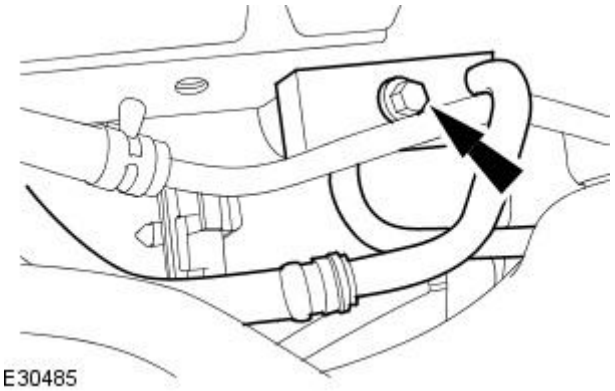


**10.** Detach the A/C compressor supply and return lines.

- Remove and discard the A/C compressor O-ring seals.
- Cap the exposed ports.

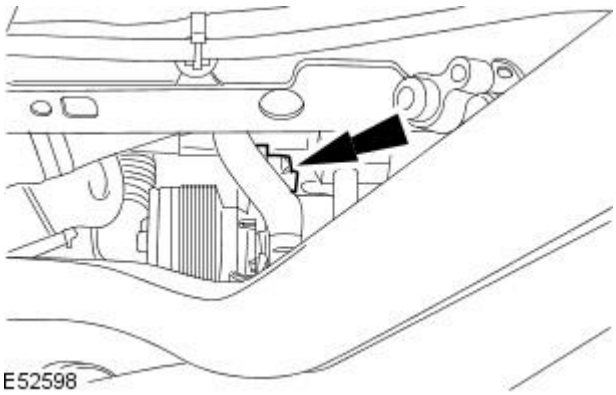


**11.** Disconnect the A/C compressor electrical connector.

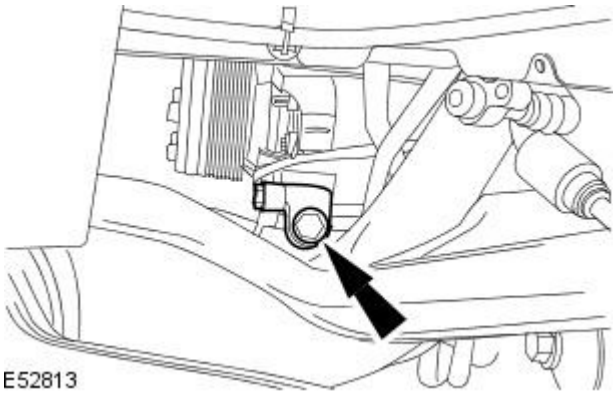


**12.** Remove the A/C compressor left-hand lower retaining bolt.

- Position the A/C pipe retaining bracket to one side.

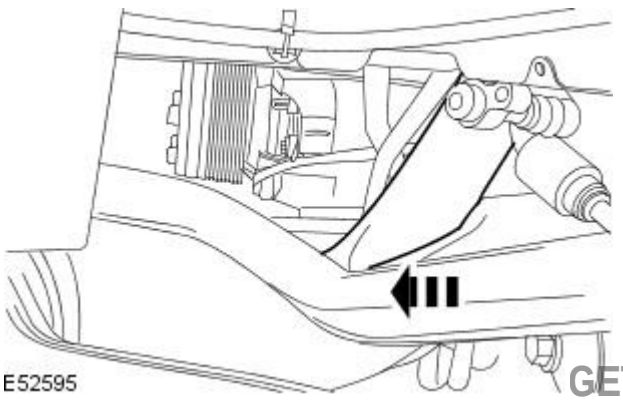


**13.** Reposition the air cleaner lower outlet tube to one side to gain access to the A/C compressor right-hand lower retaining bolt.

GETtheMANUALS.org

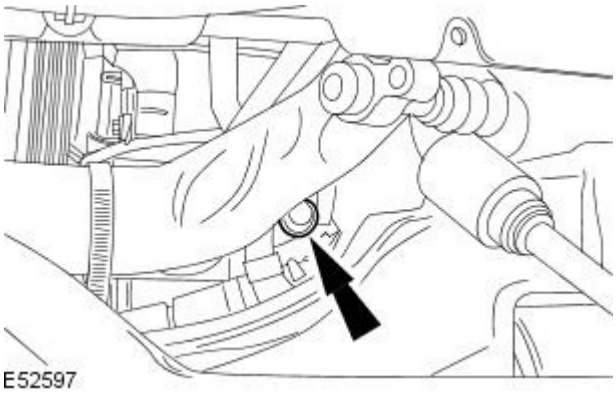


**14.** Remove the A/C compressor right-hand lower retaining bolt.

**15.** Lower the vehicle.

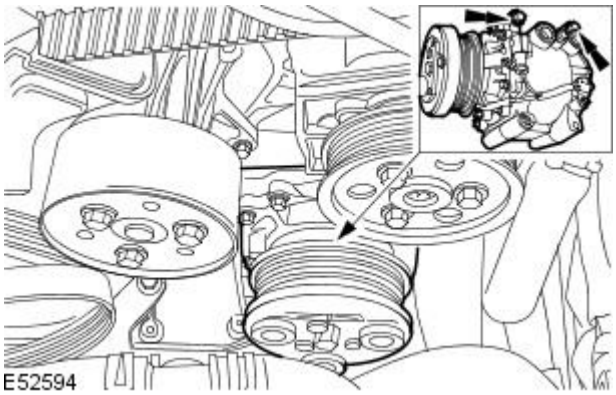


**16.** CAUTION: Carefully remove the A/C compressor past the coolant pipes. Failure to follow this instruction, may result in damage to the coolant pipes.

Remove the A/C compressor upper retaining bolts and remove the A/C compressor.

## Installation

All vehicles

**1.** Add the correct amount of A/C refrigerant oil to the A/C compressor. For additional information, refer to: Refrigerant Oil Adding (412-00 Climate Control System - General Information, General Procedures).

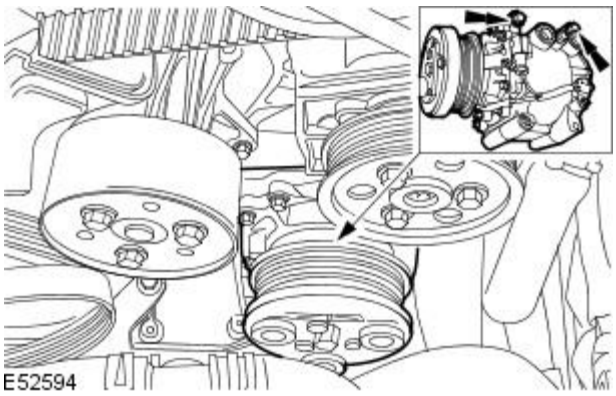


**2.** CAUTION: Carefully install the A/C compressor past the coolant pipes. Failure to follow this instruction, may result in damage to the coolant pipes.

Install the A/C compressor.

- Install the A/C compressor upper retaining bolts.
- Tighten to 25 Nm.

**3.** Raise the vehicle.

**4.** Install the A/C compressor right-hand lower retaining bolt.

- Tighten to 25 Nm.

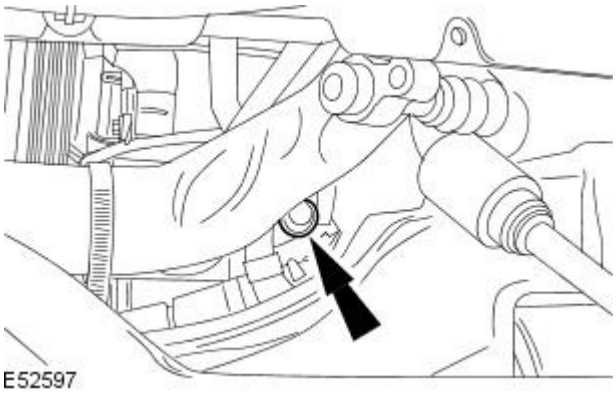


GETtheMANUALS.org

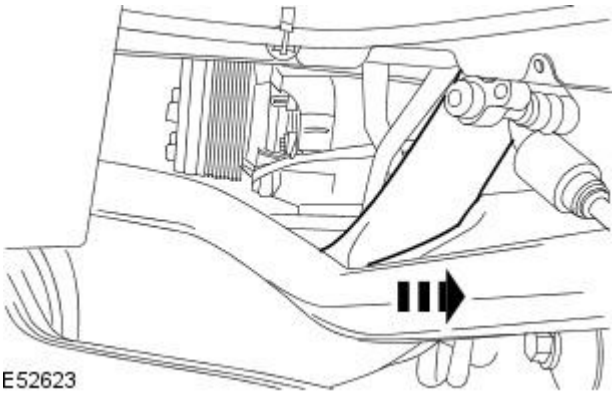


**5.** Move the air cleaner lower outlet tube back to the original position.

**6.** NOTE: Un-cap the exposed ports.

Install new A/C compressor O-ring seals.

- Lubricate the new O-ring seals with A/C refrigerant oil.

**7.** Connect the A/C compressor supply and return lines.

- Tighten to 20 Nm.

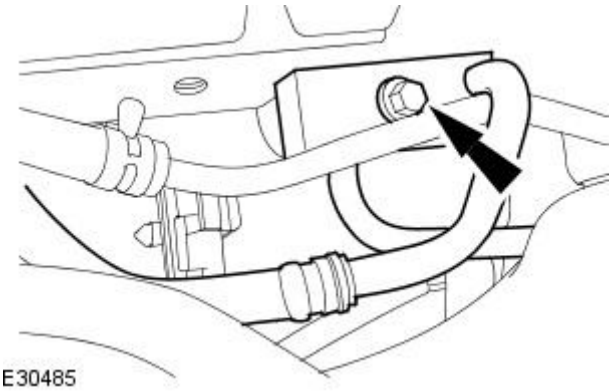


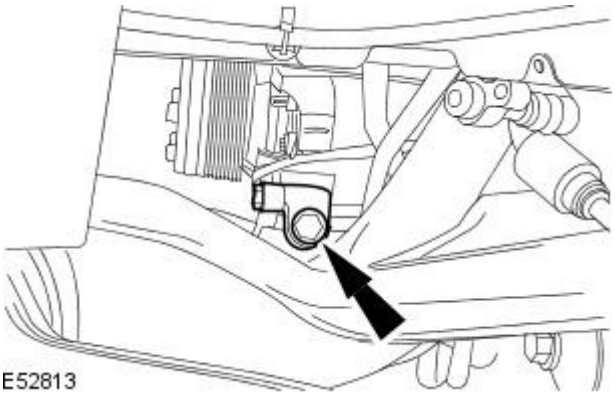


**8.** NOTE: The A/C pipe retaining bracket must be positioned in the correct orientation before installing the the left hand lower A/C compressor retaining bolt

Install the A/C compressor left hand lower retaining bolt.

- Tighten to 25 Nm.

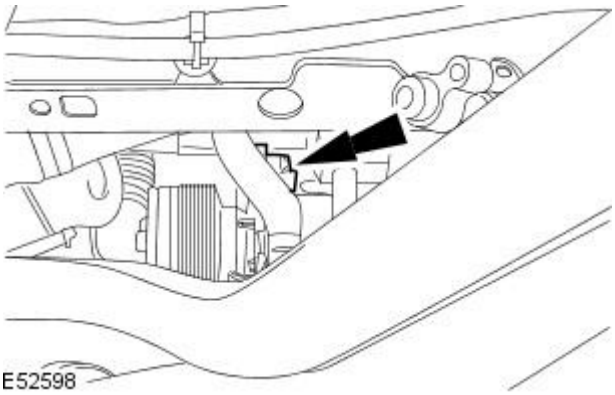


**9.** Connect the A/C compressor electrical connector.

GETtheMANUALS.org

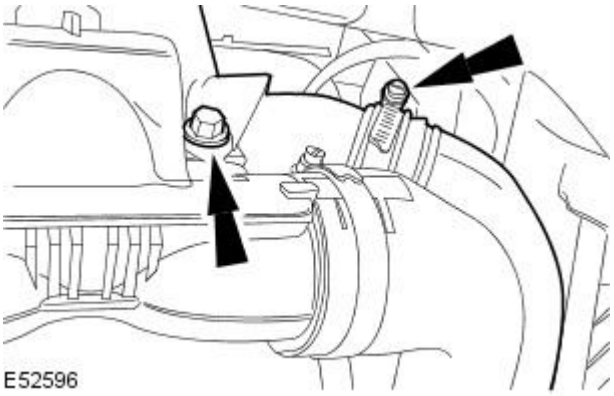


**10.** Install the air cleaner upper outlet tube.

**11.** Connect the air cleaner lower outlet tube.

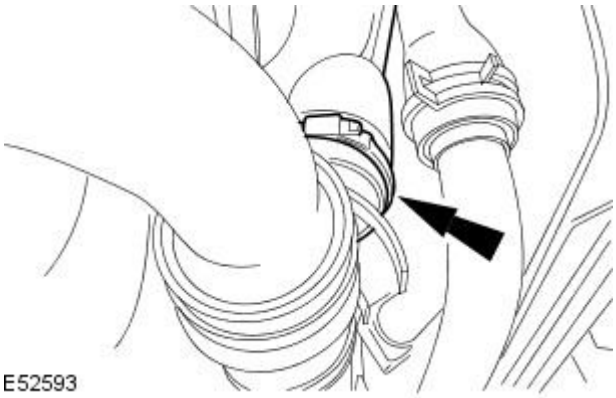


**12.** Install the turbocharger to charge air cooler.

Vehicles with automatic transmission

**13.** Install the transmission fluid cooler.
For additional information, refer to: Transmission Fluid Cooler (307-02 Transmission/Transaxle Cooling, Removal and Installation).

All vehicles

**14.** Install the cooling fan motor and shroud.
For additional information, refer to: Cooling Fan Motor and Shroud (303-03C Engine Cooling - 2.7L V6 - TdV6, Removal and Installation).

**15.** Connect the turbocharger to charge air cooler tube.

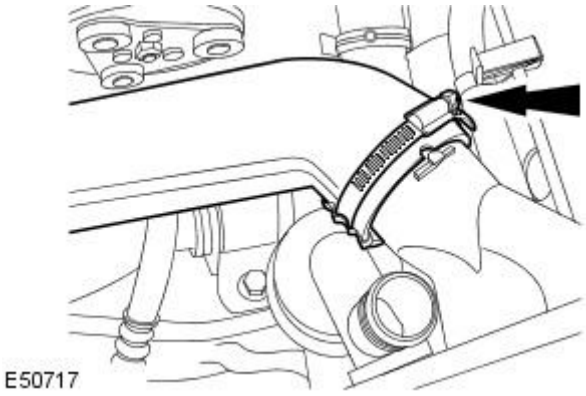


**16.** Install the accessory drive belt.
For additional information, refer to: Accessory Drive Belt - 2.7L V6 - TdV6 (303-05 Accessory Drive, Removal and Installation).

**17.** Connect the battery ground cable.
For additional information, refer to: Battery Connect (414-01 Battery, Mounting and Cables, General Procedures).

GETtheMANUALS.org

18. Carry out the A/C system evacuation and charging procedure. For additional information, refer to: Air Conditioning (A/C) System Recovery, Evacuation and Charging (412-00 Climate Control System - General Information, General Procedures).

19. Carry out the A/C system fluorescent dye leak detection procedure. For additional information, refer to: Fluorescent Dye Leak Detection (412-00 Climate Control System - General Information, General Procedures).

GETtheMANUALS.org

# Air Conditioning - Clutch and Clutch Field Coil

Removal and Installation

| Special Tool(s) | |
|---|---|
| 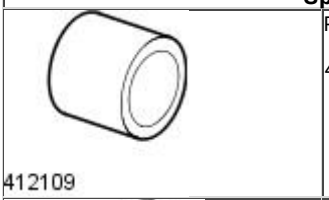 412109 | Pulley Replacer<br><br>412-109 |
| 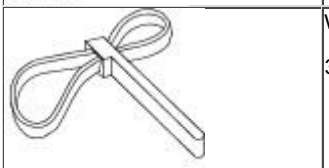 303D055 | Wrench Strap-Universal<br><br>303-D055 |
| 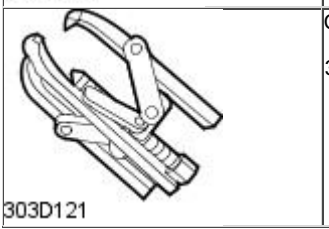 303D121 | Crankshaft Damper Remover<br><br>303-D121 |

## Removal

1. Remove the air conditioning (A/C) compressor. For additional information, refer to
   For additional information, refer to: Air Conditioning (A/C) Compressor - 2.5L NA V6 - AJV6/3.0L NA V6 - AJ27 (412-03 Air Conditioning, Removal and Installation).
2. NOTE: Make sure special tool is holding the clutch.

   Using the special tool, loosen the A/C clutch retaining nut.

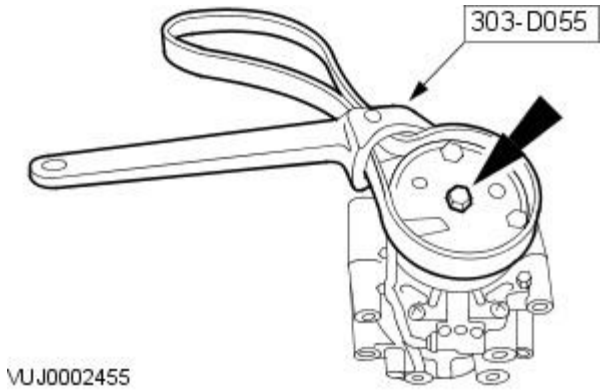

VUJ0002455

3. Remove the A/C clutch.
   - Remove the A/C clutch retaining nut.

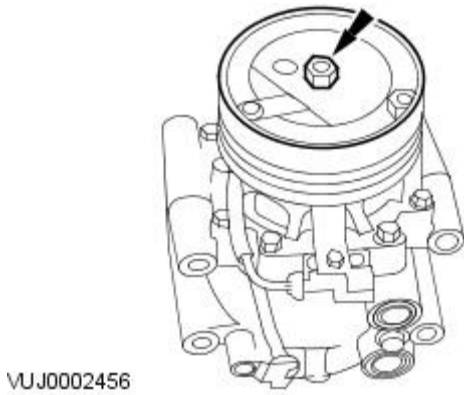
VUJ0002456

GETtheMANUALS.org

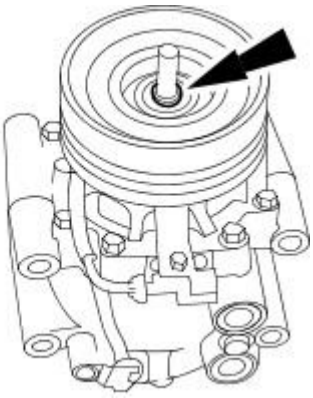

VUJ0002457

**4.** Remove the A/C clutch shim.

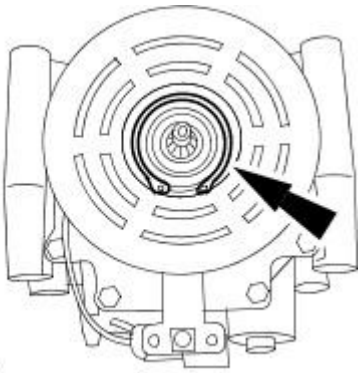

VUJ0002458

**5.** Remove the A/C clutch pulley circlip.

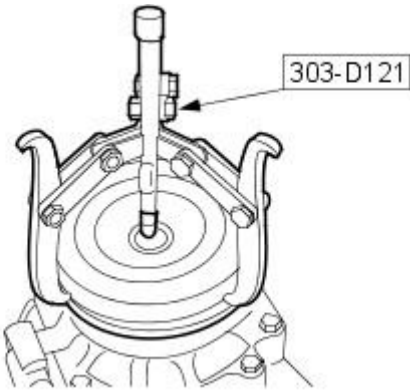


VUJ0002459

**6.** CAUTION: Do not use air tools.

Using the special tool, remove the A/C clutch pulley.

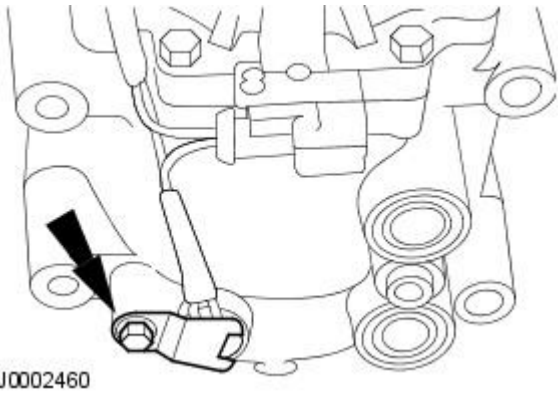

VUJ0002460

**7.** Remove the A/C sensor retaining plate.

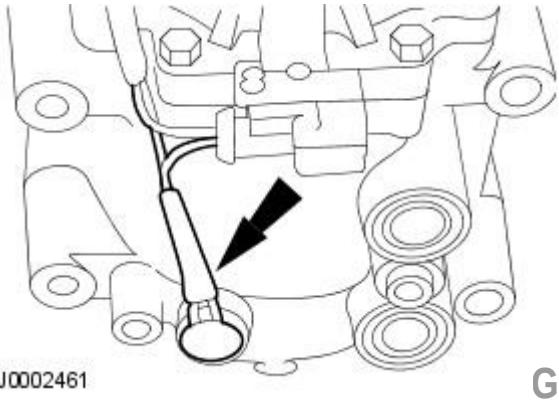

VUJ0002461

**8.** Detach the A/C sensor.

GETtheMANUALS.org

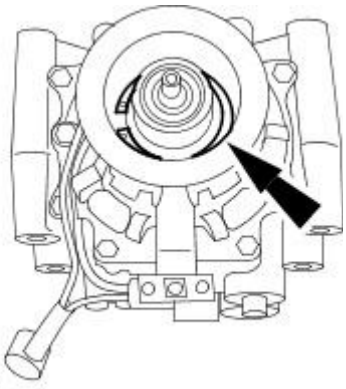
VUJ0002462

**9.** Remove the A/C clutch and clutch field coil circlip.

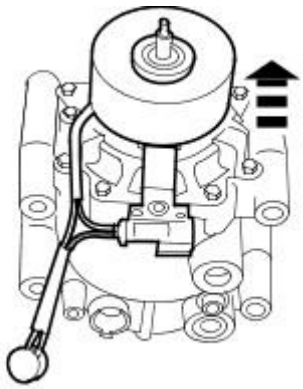
VUJ0002463

**10.** Remove the A/C clutch and clutch field coil.

## Installation

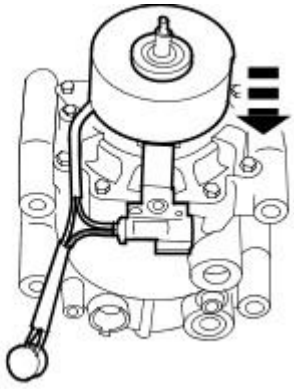
VUJ0002466

**1.** Install the A/C clutch and clutch field coil.

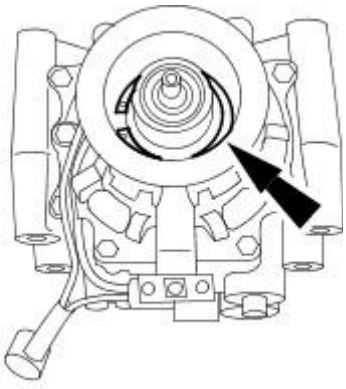
VUJ0002462

**2.** CAUTION: Make sure the circlip is installed and seated correctly. Failure to follow this instruction may result in damage to the vehicle.

Install the A/C clutch and clutch field coil circlip.

GETtheMANUALS.org

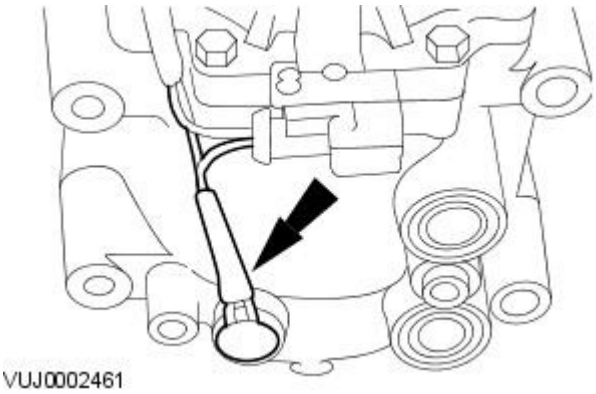


**3.** Attach the A/C temperature sensor.

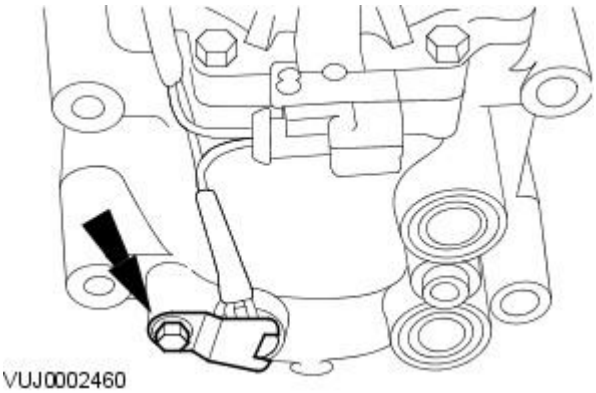


**4.** Install the A/C temperature sensor retaining plate.

- Tighten to 6 Nm.

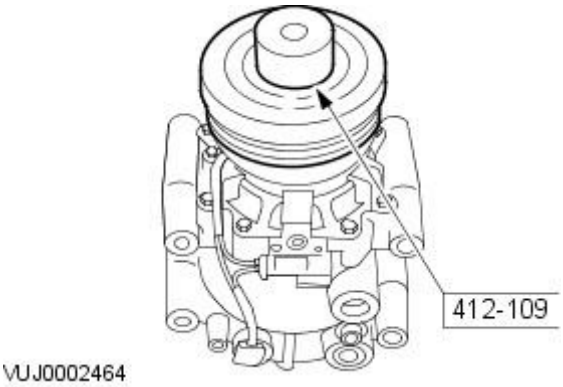


**5.** NOTE: The A/C clutch bearing and pulley is a slip fit on the compressor. If correctly aligned it should slip on easily. If difficulty is experienced on installation, use the special tool and gently tap the A/C clutch pulley.

Using the special tool, install the A/C clutch pulley.

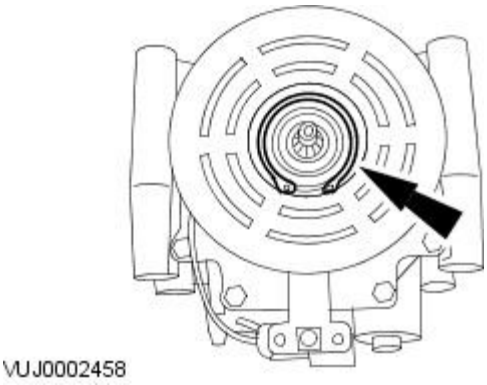


**6.** CAUTION: Make sure the circlip is installed and seated correctly. Failure to follow this instruction may result in damage to the vehicle.

Install the A/C clutch pulley circlip.

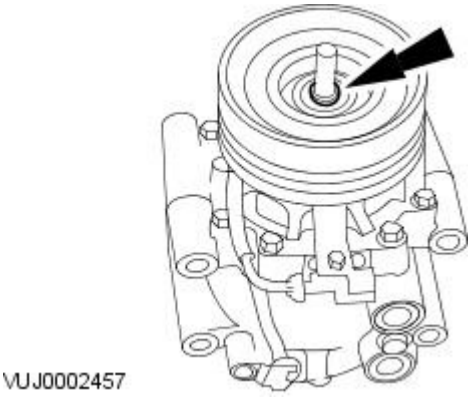


**7.** Install the A/C clutch shim.

GETtheMANUALS.org

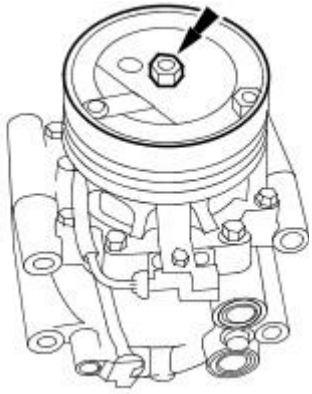

VUJ0002456

**8.** Install the A/C clutch.

- Install the A/C clutch retaining nut.

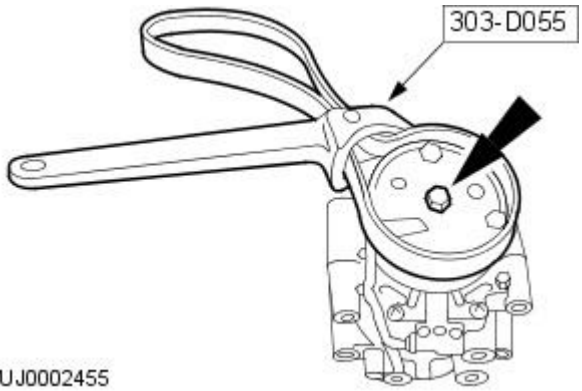


VUJ0002455

**9.** NOTE: Make sure special tool is holding the clutch.

Using the special tool, tighten the A/C clutch retaining nut.

- Tighten to 26 Nm.

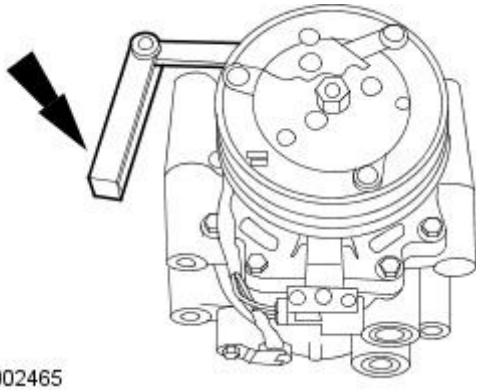

VUJ0002465

**10.** Measure and adjust the air gap by removing or installing A/C clutch shims.

- Air gap to be set between 0.35 mm (0.01 in) to 0.75 mm (0.03 in).

**11.** Install the air conditioning (A/C) compressor. For additional information, refer to
For additional information, refer to: Air Conditioning (A/C) Compressor - 2.5L NA V6 - AJV6/3.0L NA V6 - AJ27 (412-03 Air Conditioning, Removal and Installation).

GETtheMANUALS.org

# Air Conditioning - Condenser Core

Removal and Installation

## Removal

1. Carry out the air conditioning (A/C) system recovery procedure.
   For additional information, refer to: Air Conditioning (A/C) System Recovery, Evacuation and Charging (412-00 Climate Control System - General Information, General Procedures).
2. Remove the radiator splash shield.
   For additional information, refer to: Radiator Splash Shield (501-02 Front End Body Panels, Removal and Installation).
3. Detach the coolant pipe.

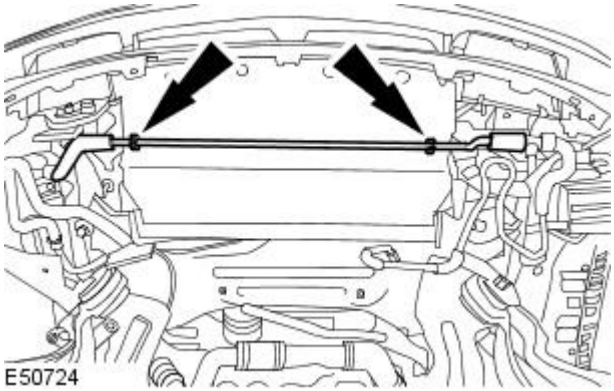


4. Remove the radiator lower cowl.

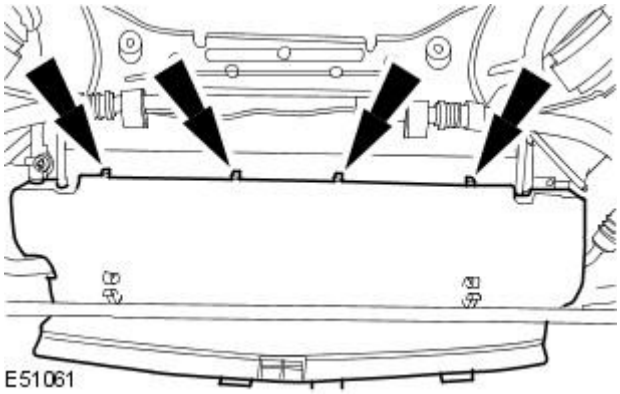


5. Detach the adaptive cruise control (ACC) module bracket.

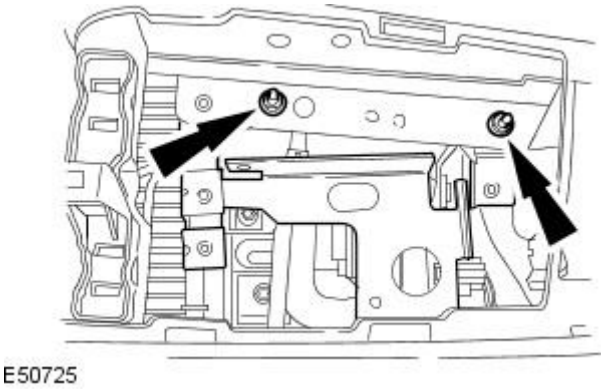


6. Remove the power steering oil cooler retaining nut.

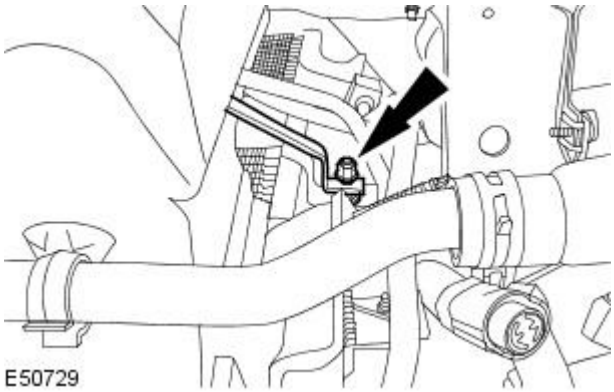


GETtheMANUALS.org

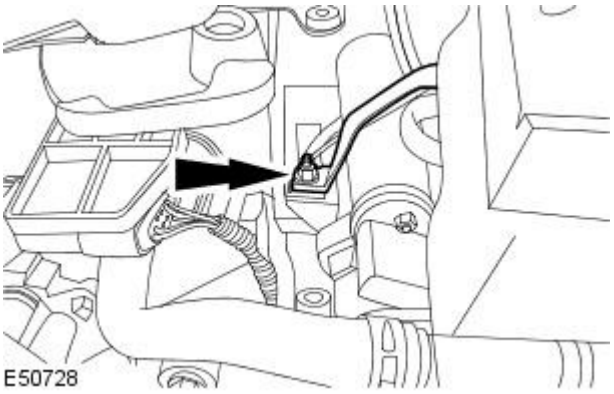


**7.** Detach the power steering oil cooler.

- Using a suitable tie strap, tie the power steering oil cooler aside.

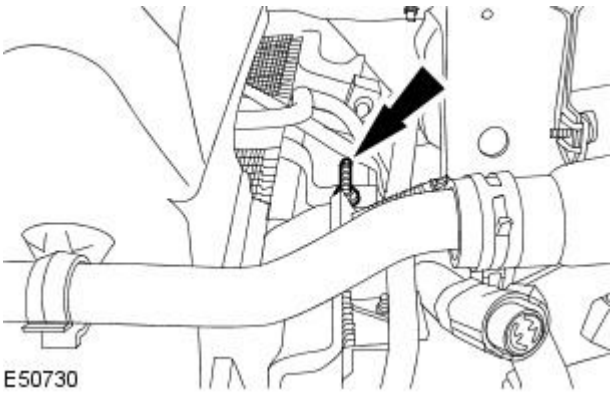


**8.** Remove the A/C condenser core retaining stud.

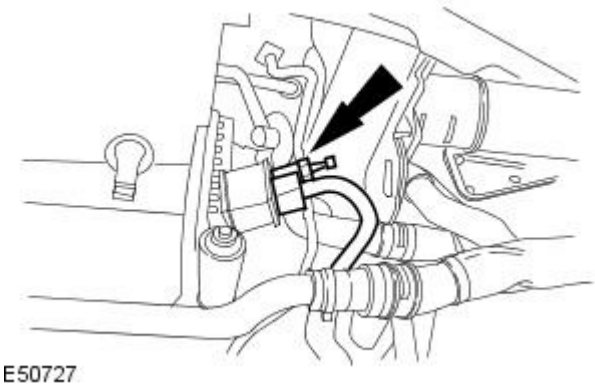


**9.** NOTE: Cap the exposed ports.

Disconnect the condensor core return line.

- Remove and discard the O-ring seals.

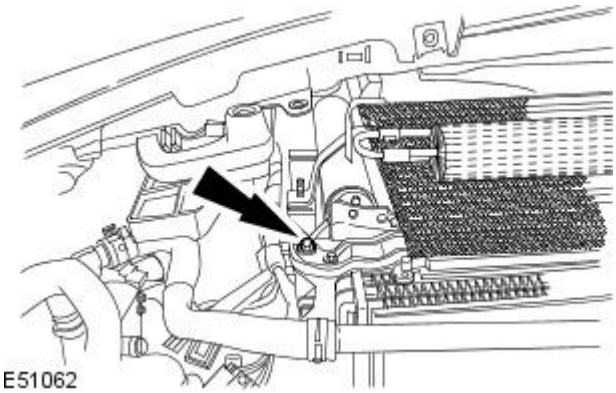


**10.** Detach the condensor core.

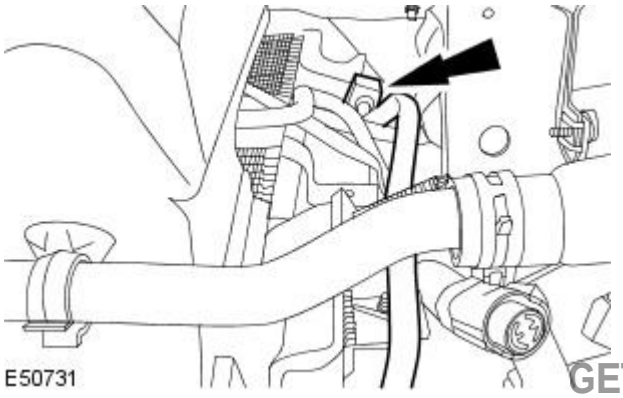


**11.** NOTE: Cap the exposed ports.

Disconnect the condensor core supply line.

- Remove and discard the O-ring seals.

GETtheMANUALS.org

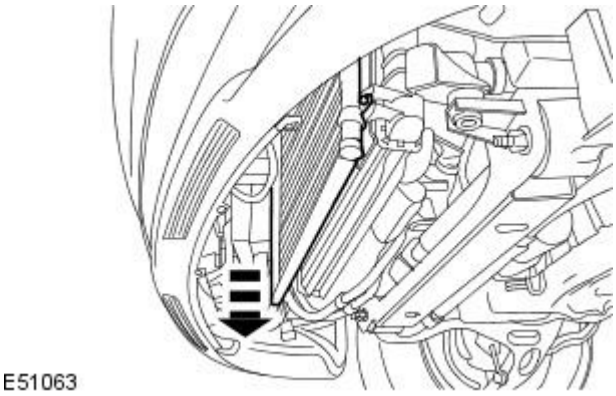


**12.** Remove the condensor core.

## Installation

**1.** Add the correct amount of A/C refrigerant oil to the A/C Condensor core. For additional information, refer to: Refrigerant Oil Adding (412-00 Climate Control System - General Information, General Procedures).

**2.** Install the condensor core.

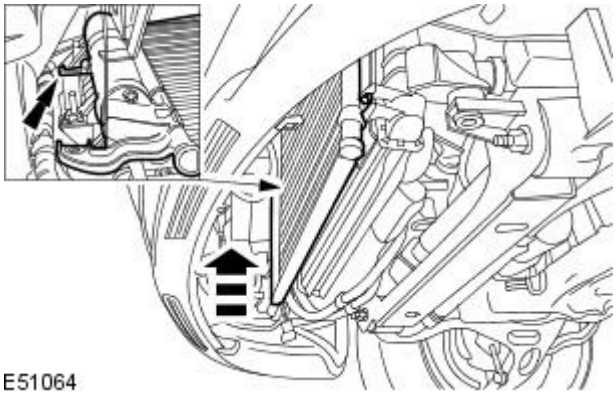


**3.** NOTE: Lubricate the new O-ring seals with A/C refrigerant oil.

• NOTE: Un-cap the exposed ports

Connect the condensor core supply line.

- Tighten to 8 Nm.

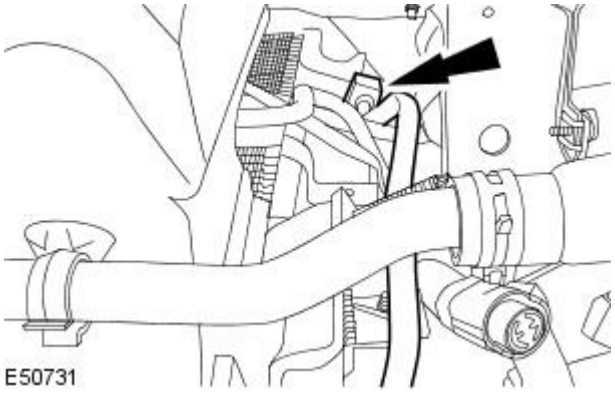


**4.** Attach the condensor core.

- Tighten to 8 Nm.

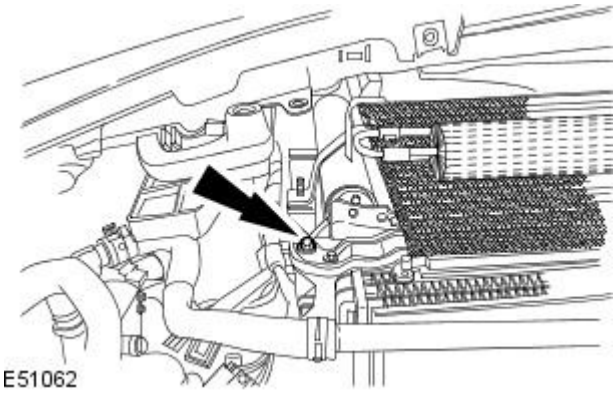


GETtheMANUALS.org

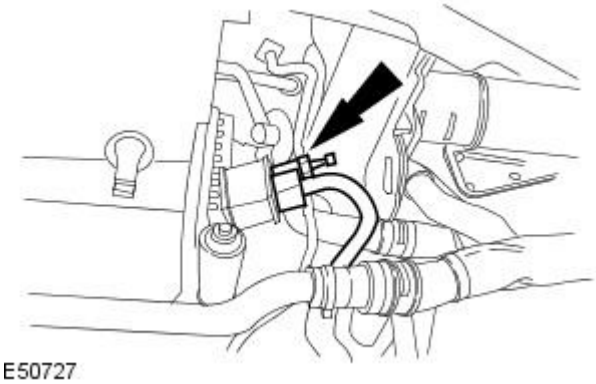
E50727

**5.** NOTE: Lubricate the new O-ring seals with A/C refrigerant oil.

• NOTE: Un-cap the exposed ports

Connect the condensor core return line.

- Tighten to 8 Nm.

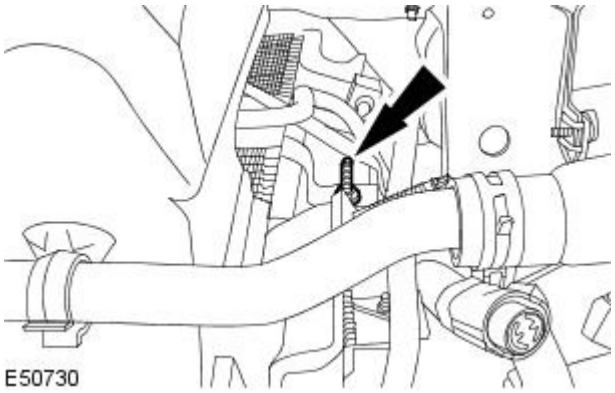
E50730

**6.** Install the A/C condenser core retaining stud.

- Tighten to 8 Nm.

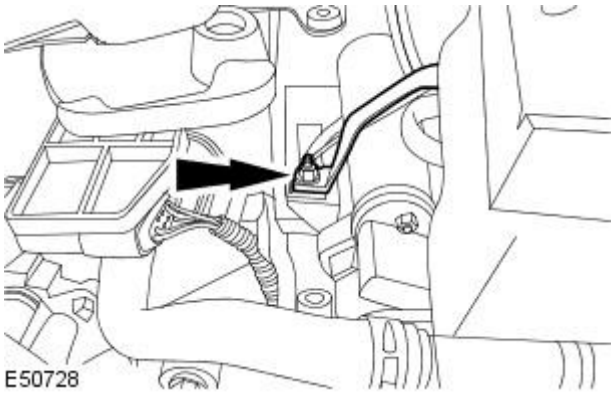
E50728

**7.** Attach the power steering oil cooler.

- Remove the tie strap.

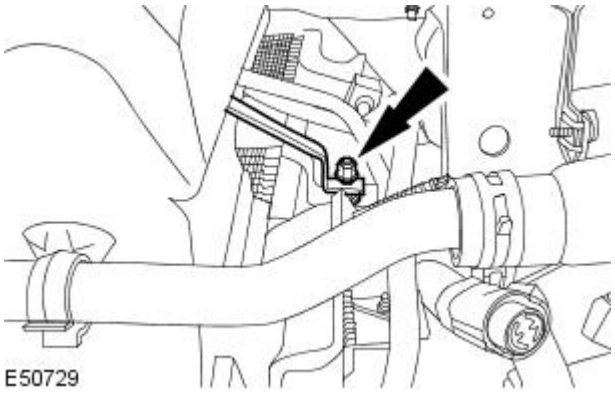
E50729

**8.** Install the power steering oil cooler retaining nut.

- Tighten to 8 Nm.

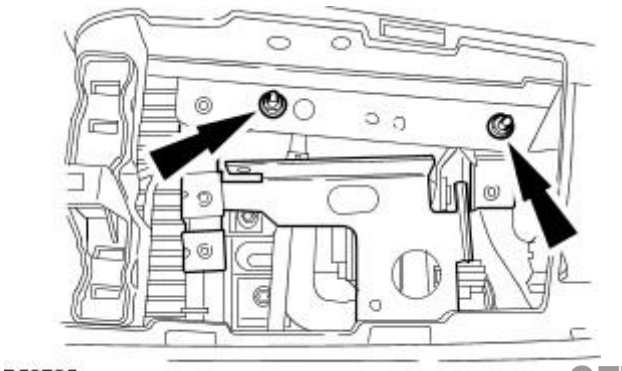
E50725

**9.** Attach the adaptive cruise control (ACC) module bracket.

- Tighten to 7 Nm.

GETtheMANUALS.org

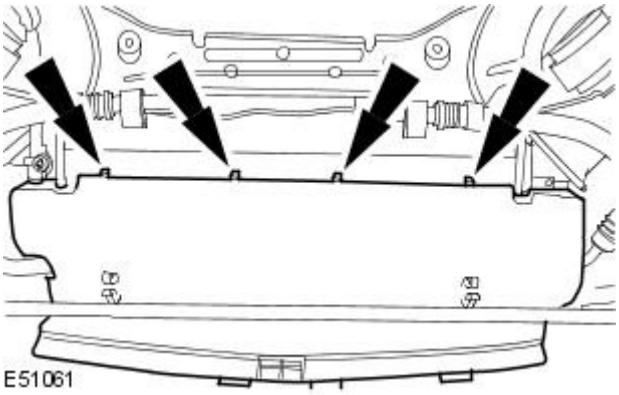


**10.** Install the radiator lower cowl.

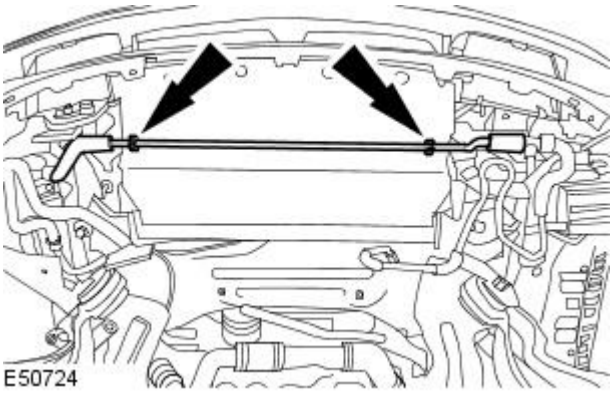


**11.** Attach the coolant pipe.

**12.** Install the radiator splash shield.
For additional information, refer to: Radiator Splash Shield (501-02 Front End Body Panels, Removal and Installation).

**13.** Carry out the air conditioning (A/C) system charging procedure.
For additional information, refer to: Air Conditioning (A/C) System Recovery, Evacuation and Charging (412-00 Climate Control System - General Information, General Procedures).

GETtheMANUALS.org

# Air Conditioning - Desiccant Bag

Removal and Installation

## Removal

1. Carry out the air conditioning (A/C) system recovery procedure.
   For additional information, refer to: Air Conditioning (A/C) System Recovery, Evacuation and Charging (412-00 Climate Control System - General Information, General Procedures).
2. Remove the radiator splash shield.
   For additional information, refer to: Radiator Splash Shield (501-02 Front End Body Panels, Removal and Installation).
3. Detach the coolant pipe.

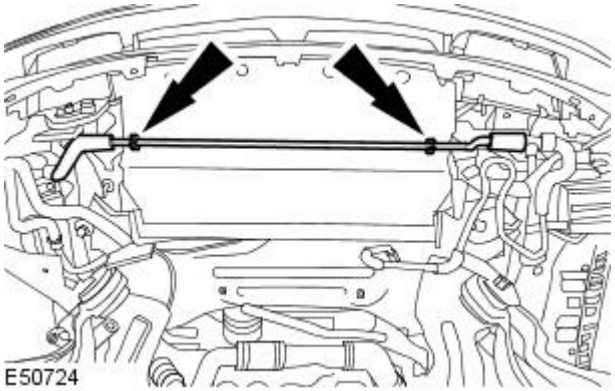


4. Remove the radiator lower cowl.

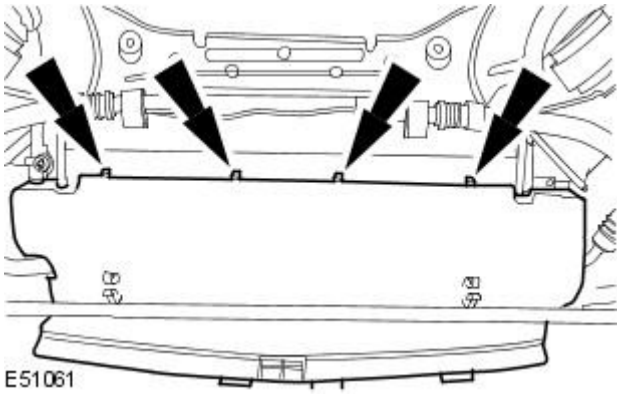


5. Detach the power steering fluid cooler.

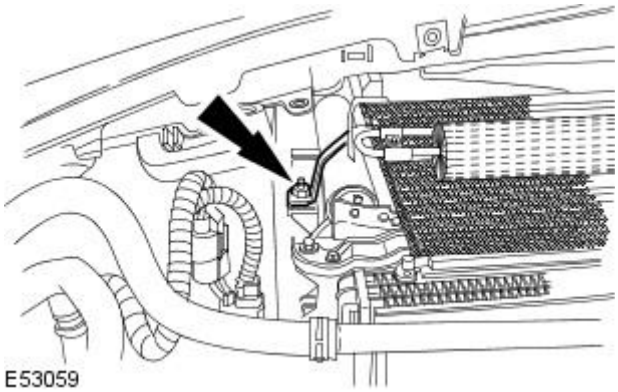


6. Remove the desiccant bag retaining bracket.

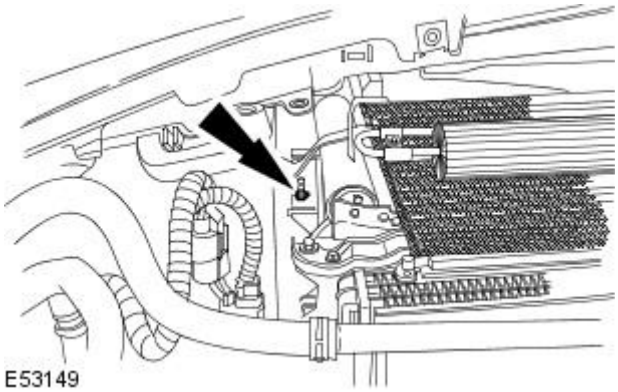


GETtheMANUALS.org

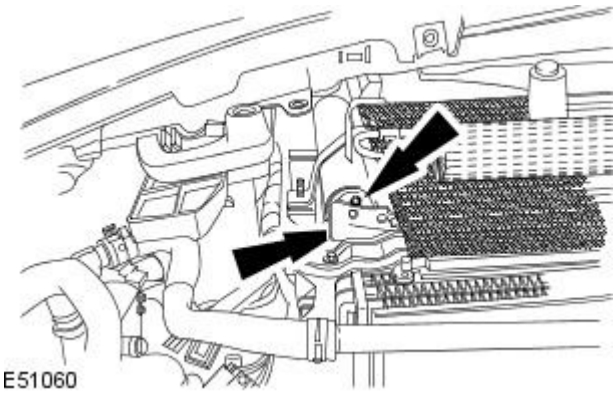


7. CAUTION: Do not leave the A/C system open to atmosphere for longer than five minutes.

• NOTE: Discard the O-ring seals.

• NOTE: Cap the exposed ports.

Remove and discard the desiccant bag.

- Remove the desiccant bag retaining bolts.

## Installation

1. Add the correct amount of A/C refrigerant oil to the desiccant bag. For additional information, refer to: Refrigerant Oil Adding (412-00 Climate Control System - General Information, General Procedures).
2. Install new desiccant bag O-ring seals.
   - Lubricate the new O-ring seals with A/C refrigerant oil.

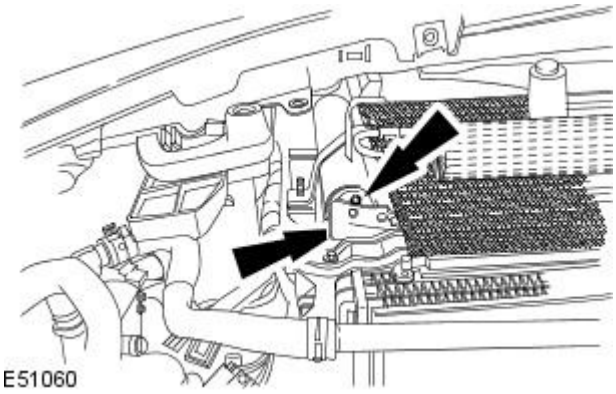


3. CAUTION: Do not leave the desiccant bag exposed to atmosphere for longer than five minutes.

• NOTE: Un-cap the exposed ports.

Install the new desiccant bag.

- Tighten to 8 Nm.

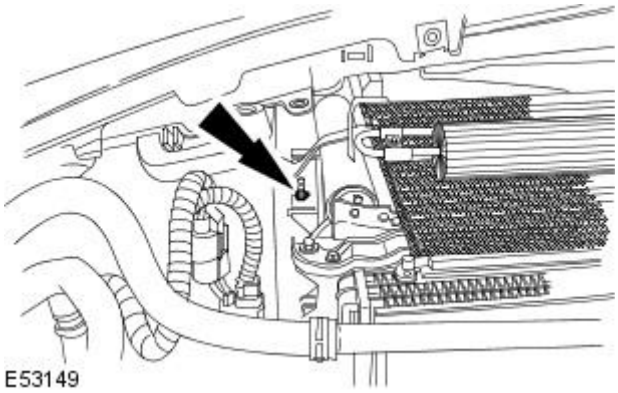


4. Install the desiccant bag retaining bracket.
   - Tighten to 8 Nm.

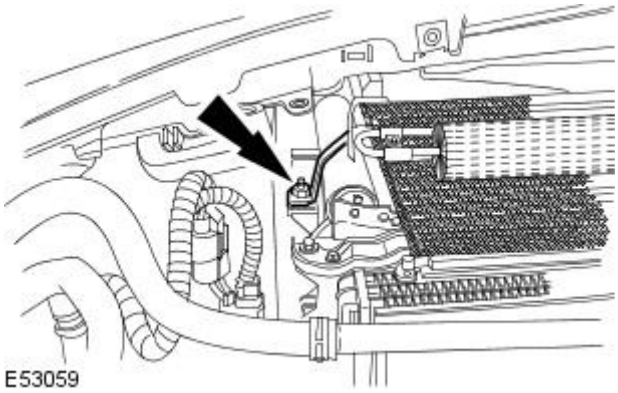


5. Attach the power steering fluid cooler.

6. Clean off any oil residue that may contain A/C system flourescent dye.

GETtheMANUALS.org

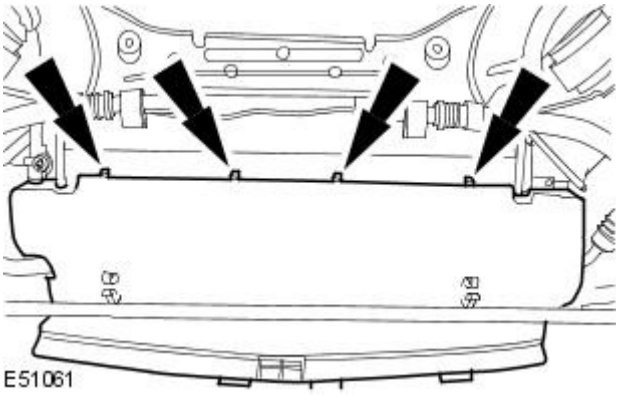


**7.** Install the radiator lower cowl.

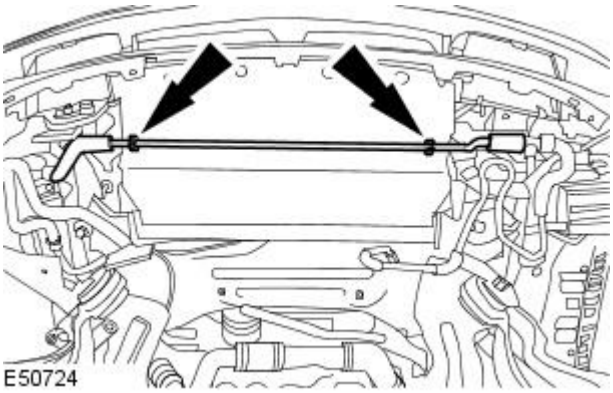


**8.** Attach the coolant pipe.

**9.** Install the radiator splash shield.
For additional information, refer to: Radiator Splash Shield (501-02 Front End Body Panels, Removal and Installation).

**10.** Carry out the air conditioning (A/C) system charging procedure.
For additional information, refer to: Air Conditioning (A/C) System Recovery, Evacuation and Charging (412-00 Climate Control System - General Information, General Procedures).

GETtheMANUALS.org

# Air Conditioning - Pressure Cutoff SwitchV8 4.2L Petrol / V8 S/C 4.2L Petrol / 2.5L NA V6 - AJV6 / 3.0L NA V6 - AJ27

Removal and Installation

Vehicles with 2.5L or 3.0L engine

1. Remove the air cleaner. For additional information, refer to Section 303-12A Intake Air Distribution and Filtering / 303-12B Intake Air Distribution and Filtering / 303-12C Intake Air Distribution and Filtering.

Vehicles with 4.2L engine

2. Remove the air cleaner. For additional information, refer to Section 303-12A Intake Air Distribution and Filtering / 303-12B Intake Air Distribution and Filtering / 303-12C Intake Air Distribution and Filtering.

All vehicles

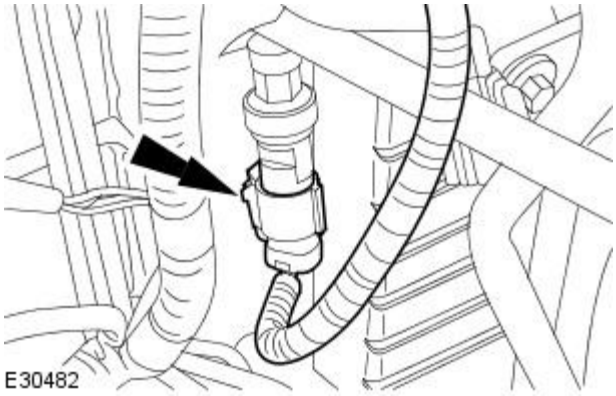


3. Disconnect the pressure cutoff switch electrical connector.

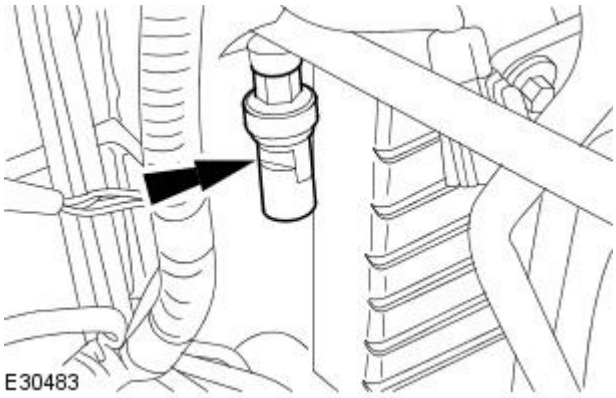


4. Remove the pressure cut-off switch.
   - Remove and discard the pressure cutoff switch O-ring seal.

## Installation

All vehicles

1. Install a new pressure cutoff switch O-ring seal.
   - Lubricate the new 0-ring seal with A/C refrigerant oil.

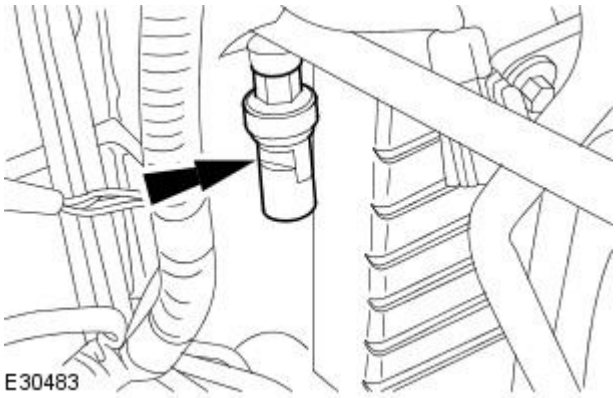


2. Install the pressure cutoff switch.
   1. Tighten to 8 Nm.

GETtheMANUALS.org

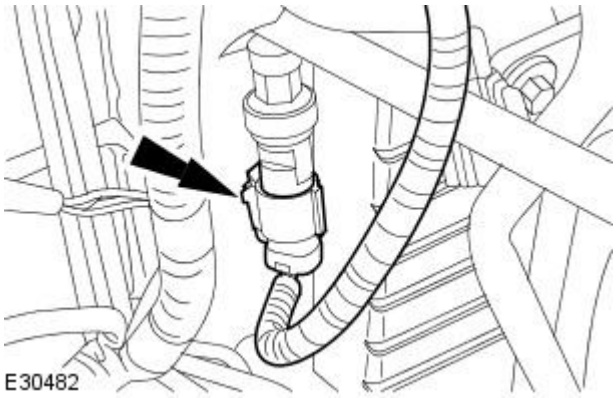


3. Connect the pressure cutoff switch electrical connector.

4. Clean off any oil residue that may contain A/C system flourescent dye.

Vehicles with 2.5L or 3.0L engine

5. Install the air cleaner. For additional information, refer to Section 303-12A Intake Air Distribution and Filtering / 303-12B Intake Air Distribution and Filtering / 303-12C Intake Air Distribution and Filtering.

Vehicles with 4.2L engine

6. Install the air cleaner. For additional information, refer to Section 303-12A Intake Air Distribution and Filtering / 303-12B Intake Air Distribution and Filtering / 303-12C Intake Air Distribution and Filtering.

All vehicles

7. Carry out the A/C system flourescent dye leak detection procedure. For additional information, refer to Section 412-00 Climate Control System - General Information.

GETtheMANUALS.org

# Air Conditioning - Pressure Cutoff Switch2.7L V6 - TdV6

Removal and Installation

## Removal

1. Carry out the air conditioning (A/C) system recovery procedure.
   For additional information, refer to: Air Conditioning (A/C) System Recovery, Evacuation and Charging (412-00 Climate Control System - General Information, General Procedures).
2. Remove the radiator splash shield.
   For additional information, refer to: Radiator Splash Shield (501-02 Front End Body Panels, Removal and Installation).
3. Disconnect the pressure cutoff switch electrical connector.

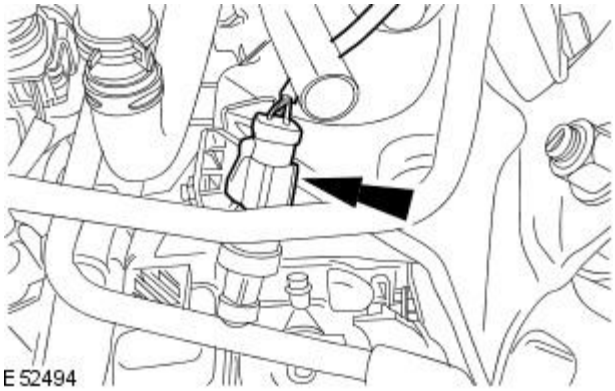


4. Remove the pressure cutoff switch.
   - Remove and discard the pressure cutoff switch O-ring seal.

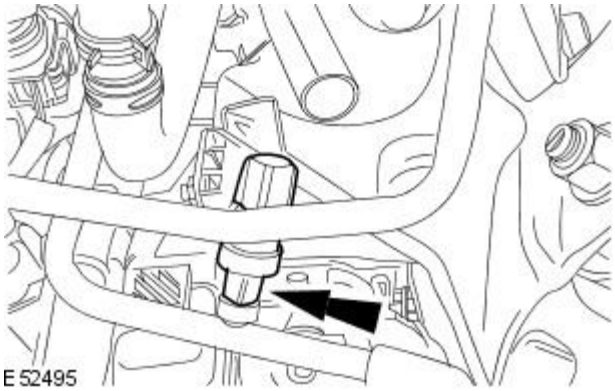


## Installation

1. Install a new pressure cutoff switch O-ring seal.
   - Lubricate the new O-ring seal with A/C refrigerant oil.
2. Install the pressure cutoff switch.
   - Tighten to 8 Nm.

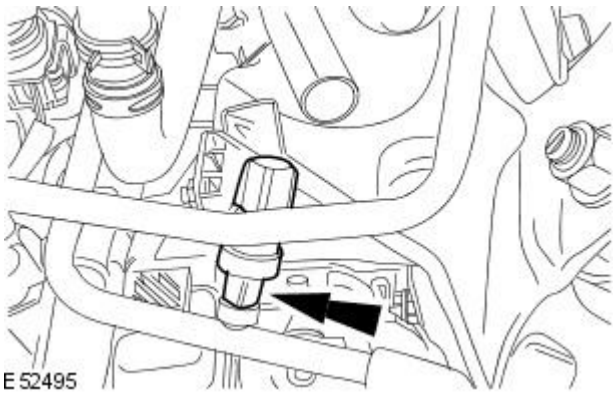


GETtheMANUALS.org

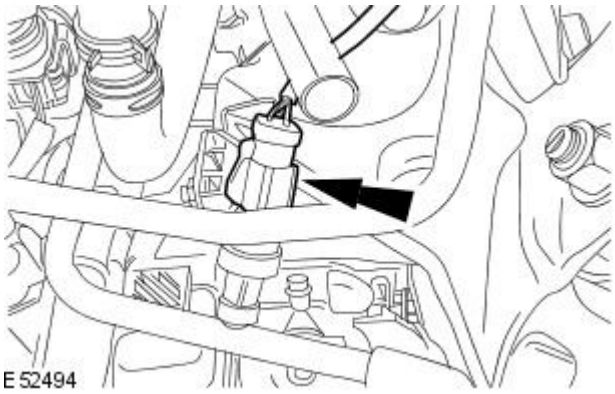


3. Connect the pressure cutoff switch electrical connector.

4. Clean off any oil residue that may contain A/C system flourescent dye.
5. Install the radiator splash shield.
   For additional information, refer to: Radiator Splash Shield (501-02 Front End Body Panels, Removal and Installation).
6. Carry out the A/C system evacuation and charging procedure.
   For additional information, refer to: Air Conditioning (A/C) System Recovery, Evacuation and Charging (412-00 Climate Control System - General Information, General Procedures).
7. Carry out the A/C system flourescent dye leak detection procedure.
   For additional information, refer to: Fluorescent Dye Leak Detection (412-00 Climate Control System - General Information, General Procedures).

GETtheMANUALS.org

# Control Components -

**Torque Specifications**

| Description | Nm | lb-ft | lb-in |
|---|---|---|---|
| In-vehicle temperature sensor | 3 | - | 27 |

GETtheMANUALS.org

# Control Components - Control Components

Description and Operation

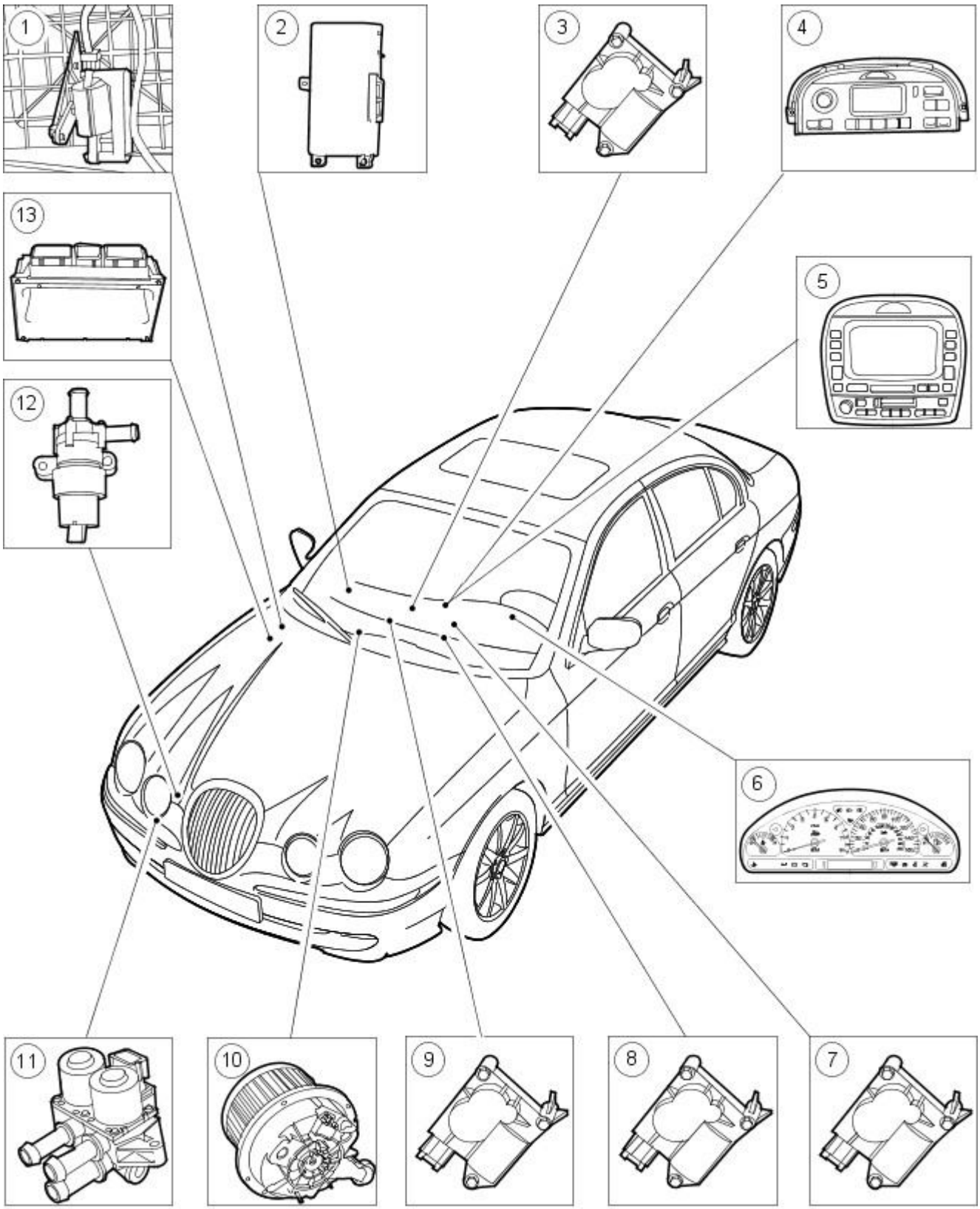


E30093

| Item | Part Number | Description |
|---|---|---|
| 1 | — | Recirculation blend door actuator |
| 2 | — | Remote Climate Control Module (RCCM). Vehicles with telematics. |
| 3 | — | Instrument panel blend door actuator |
| 4 | — | Climate control assembly |
| 5 | — | Climate control assembly. Vehicles with Telematics |
| 6 | — | Instrument cluster |
| 7 | — | Footwell vent/duct blend door actuator |
| 8 | — | Defrost vent/register blend door actuator |
| 9 | — | Cold air bypass blend door actuator |
| 10 | — | Brushless blower motor |
| 11 | — | Dual coolant flow valve |
| 12 | — | Auxillary coolant flow pump. Vehicles with 4.2L only. |
| 13 | — | Engine control module (ECM) |

GETtheMANUALS.org

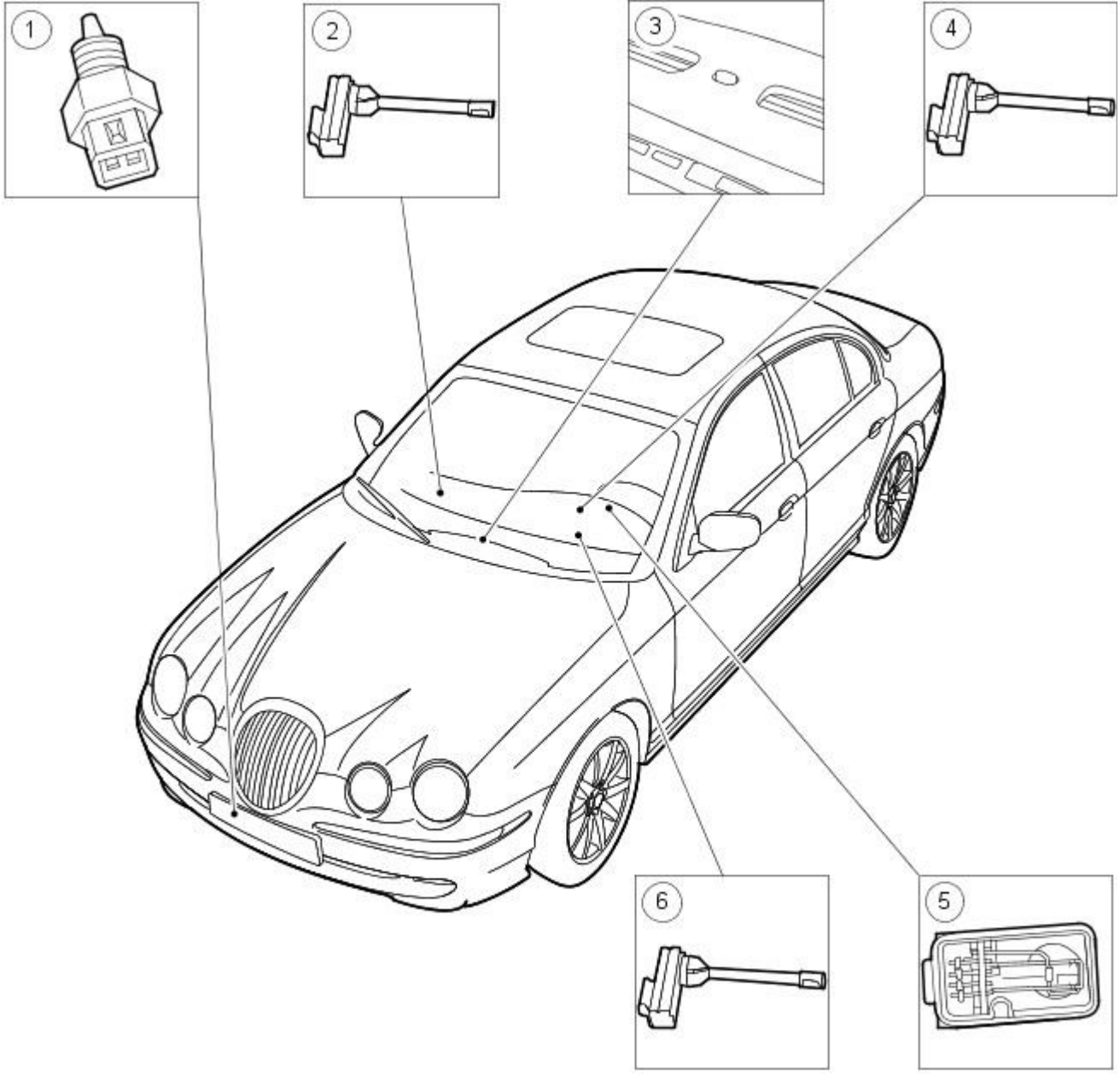


E30092

| Item | Part Number | Description |
|---|---|---|
| 1 | — | Ambient air temperature sensor |
| 2 | — | Air discharge temperature sensor RH |
| 3 | — | Sunload sensor |
| 4 | — | Air discharge temperature sensor LH |
| 5 | — | In-vehicle temperature sensor |
| 6 | — | Air discharge temperature sensor |

The climate control assembly is a single module packaged in the instrument panel console of the vehicle. It is a microprocessor-based control consisting of a bezel assembly (including all buttons and switches), a main control board and a housing for the unit.

The climate control assembly provides the following driver interface controls:

- Climate control assembly ON/OFF switch/ fan speed switch
- Manual temperature adjustment switches (drivers/passengers)
- DUAL temperature selection switch
- DEFROST switch
- Heated front screen ON/OFF switch
- Heated rear screen ON/OFF switch
- Manual air distribution MODE switch
- Fahrenheit/Centigrade option switch
- AUTO mode switch
- A/C selection switch
- Recirculate air switch

Operating any of the climate control assembly controls activates a chime emitted from the instrument cluster.

The climate control assembly automatically maintains a selected temperature for the interior of the vehicle. The system regulates the volume of airflow between the instrument panel registers, floor console registers, front and rear floor ducts, windshield defroster and side window registers. The system can automatically select between fresh and recirculated air with an optional manual override. The climate control assembly will try to provide both driver and passenger with their selected temperature for comfort. The fan controls and air distribution are not controlled individually.

## Blower Motor Control

GETtheMANUALS.org

The climate control system has a variable blower speed control provided by a brushless blower motor. The operator has the option of manually selecting one of eleven preset blower speeds from the control panel (seven preset blower speeds with telematics fitted) or

selecting to operate the climate control assembly in automatic mode.

In automatic mode, the blower speed is determined as a function of many input variables. Based on the desired in-vehicle temperature, the system constantly monitors the ambient temperature, discharge air temperatures, in-vehicle temperature and sunload levels then calculates the desired blower setting.

There are special conditions that affect the blower speed while in the automatic mode of operation.

In a cold ambient temperature condition, the climate control assembly implements a Cold Engine Lock Out (CELO) feature with the blower motor. For a cold vehicle interior, the climate control assembly will operate in low blower/defrost mode until the engine coolant temperature reaches a required value. Once the engine coolant has warmed up the blower motor will continue in the automatic mode.

At very high vehicle speeds, monitored via the Standard Corporate Protocol (SCP) vehicle speed status message, the climate control assembly system may adjust the blower motor speed to maintain constant air flow. This may be necessary in situations where the ram air effects at high speed changes the air flow into the vehicle interior.

For vehicles fitted with a cellular phone, the climate control assembly may lower the blower motor speed to reduce the level of ambient noise in the vehicle interior when the phone is in use. The status of the cellular phone is monitored via the SCP cellular phone ON/OFF message.

## Air Distribution Control

The climate control system has variable position control provided by the electrical actuators. The system gives the option of manually selecting one of five preset air distribution modes or operating the climate control assembly in automatic mode.

## Climate Control - Battery Disconnection

The climate control assembly will store the panel settings in volatile memory. Therefore, in the event of battery disconnection, or interruption of the supply, the information is lost. After reconnection, historical fault codes are available, and the panel will be set to OFF. An average automatic setting will be recovered when the climate control assembly is next switched ON.

If the battery is disconnected, the panel settings will be lost. The customers personal settings should be recorded and re-set before the vehicle is returned to the customer.

GETtheMANUALS.org

# Control Components - Control Components

Diagnosis and Testing

1. **1.** Verify the customer concern.
2. **2.** Visually inspect for obvious signs of mechanical or electrical damage.

**Visual Inspection Chart**

| Mechanical | Electrical |
|---|---|
| • Refrigerant<br>• Heater control flaps<br>• Ducting | • Fuse(s)<br>• Harness<br>• Electrical connectors<br>• Switch(es) |

3. **3.** If an obvious cause for an observed or reported concern is found, correct the cause (if possible) before proceeding to the next step.
4. **4.** If the cause is not visually evident, verify the symptom and refer to the Jaguar Approved Diagnostic System.

GETtheMANUALS.org

# Control Components - Air Discharge Temperature Sensor

Removal and Installation

## Removal

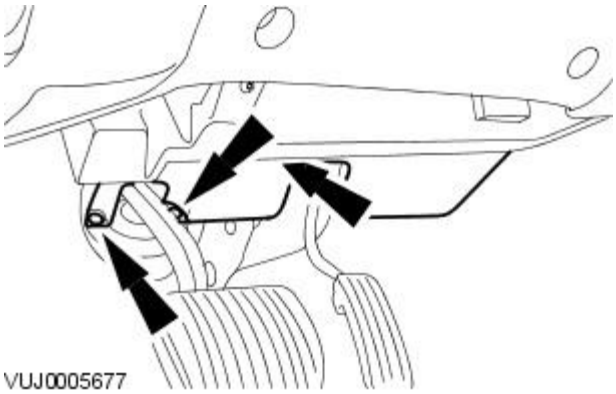


**1.** Remove the driver side instrument panel lower trim panel.

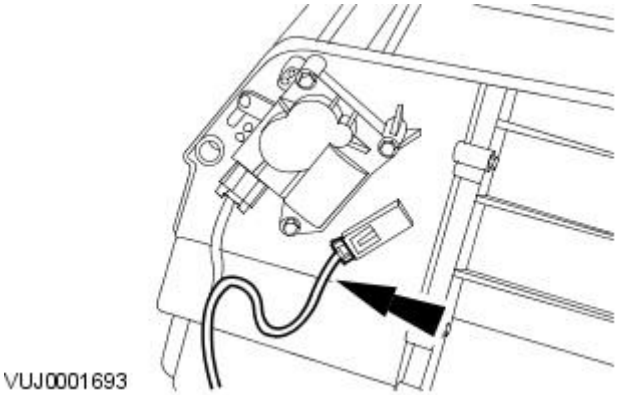


**2.** Disconnect the air discharge temperature sensor electrical connector.

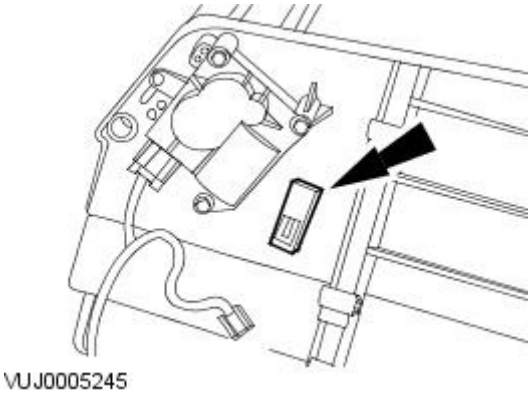


**3.** Remove the air discharge temperature sensor.

## Installation

**1.** To install, reverse the removal procedure.

GETtheMANUALS.org

# Control Components - Ambient Air Temperature Sensor

Removal and Installation

## Removal

1. Remove the radiator splash shield.
   For additional information, refer to Section 501-02 Front End Body Panels.
2. Remove the radiator lower cowl.

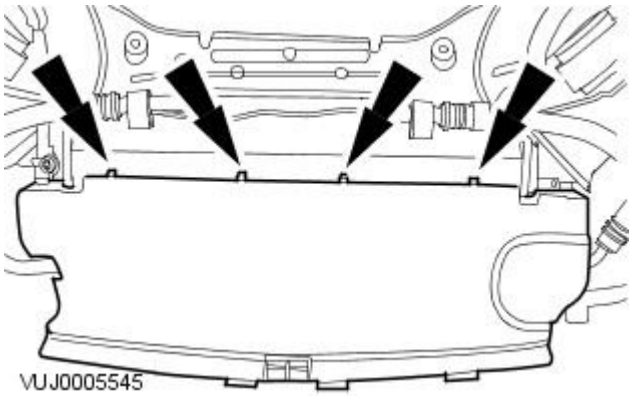


3. Disconnect the ambient air temperature electrical connector

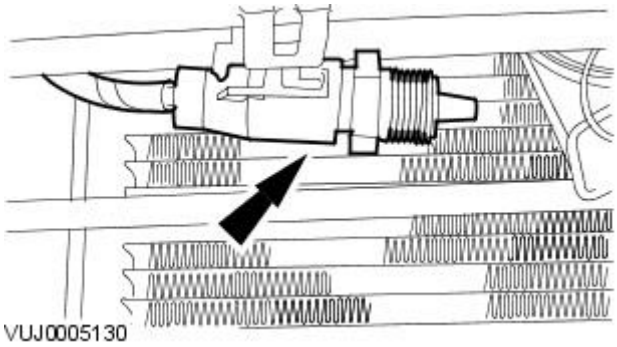


4. Remove the ambient air temperature sensor.

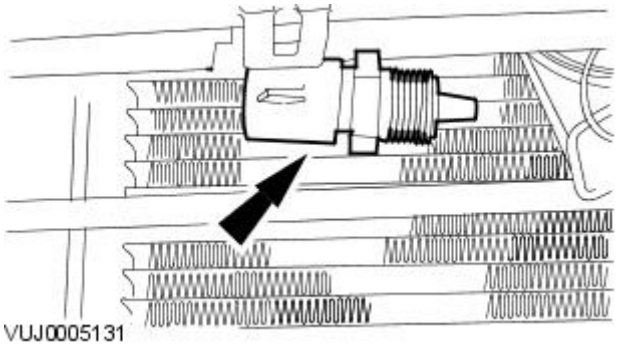


## Installation

1. To install, reverse the removal procedure.

GETtheMANUALS.org

# Control Components - Climate Control Assembly

Removal and Installation

## Removal

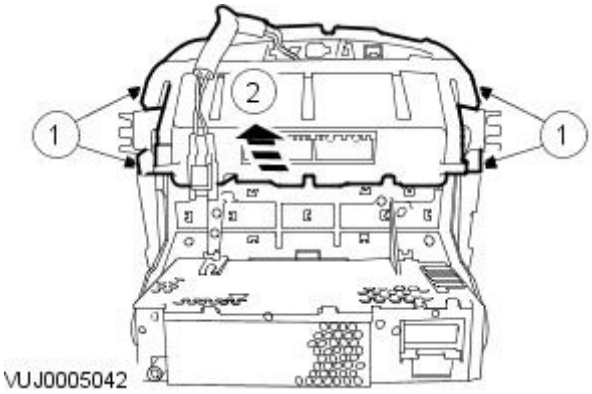


1. Disconnect the battery ground cable.
   For additional information, refer to: Battery Disconnect and Connect (414-01 Battery, Mounting and Cables, General Procedures).
2. Remove the instrument panel console.
   For additional information, refer to: Instrument Panel Console (501-12 Instrument Panel and Console, Removal and Installation).
3. Remove the climate control assembly.
   1. Remove the climate control assembly retaining screws.
   2. Remove the climate control assembly.

## Installation

1. NOTE: If a new climate control module is installed, it must be configured using the Jaguar approved diagnostic system.

   To install, reverse the removal procedure.

GETtheMANUALS.org

# Control Components - Cold Air Bypass Blend Door Actuator

Removal and Installation

## Removal

1. Disconnect the battery ground cable.
   For additional information, refer to Section 414-01 Battery, Mounting and Cables.
2. Remove the driver side instrument panel lower trim panel.

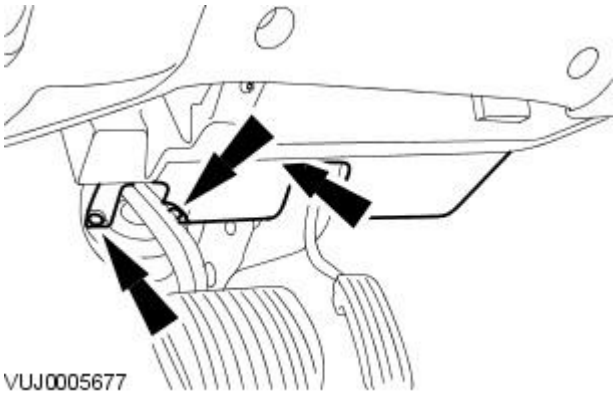


3. Disconnect the cold air bypass blend door actuator electrical connector.

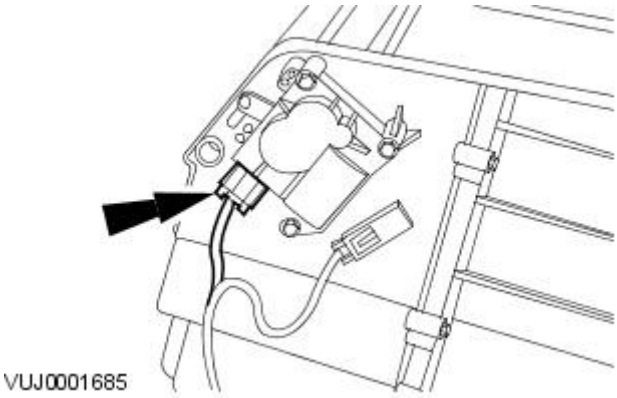


4. Remove the cold air bypass blend door actuator retaining bolts.

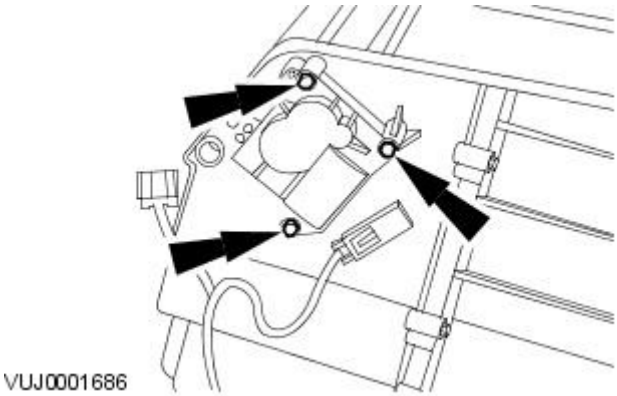


5. Remove cold air bypass blend door actuator.

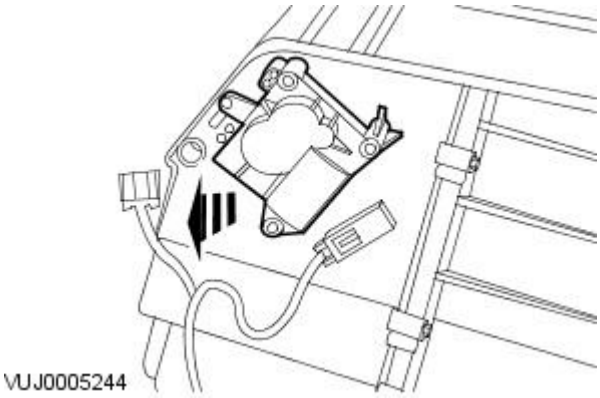


## Installation

1. NOTE: During installation make sure the actuator is fully meshed with the driven flap before tightening the bolts.

GETtheMANUALS.org

To install, reverse the removal procedure.

# Control Components - Defrost Vent/Register Blend Door Actuator

Removal and Installation

## Removal

All vehicles

1. Disconnect the battery ground cable.
   For additional information, refer to: Battery Disconnect and Connect (414-01 Battery, Mounting and Cables, General Procedures).

Left-hand drive vehicles

2. Remove the instrument cluster.
   For additional information, refer to: Instrument Cluster (413-01 Instrument Cluster, Removal and Installation).
3. Remove the defrost vent/register blend door actuator.
   1. Disconnect the electrical connector.
   2. Remove the 3 retaining bolts.

Right-hand drive vehicles

4. Remove the glove compartment.
   For additional information, refer to: Glove Compartment (501-12 Instrument Panel and Console, Removal and Installation).
5. Remove the defrost vent/register blend door actuator.
   1. Disconnect the electrical connector.
   2. Remove the 3 retaining bolts.

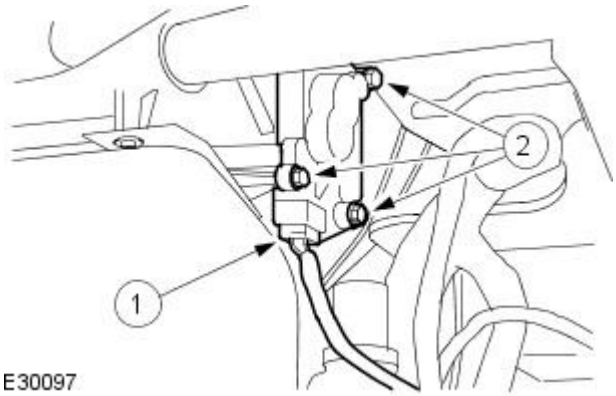


## Installation

1. NOTE: During installation make sure the actuator is fully meshed with the driven flap before tightening the bolts.

   To install, reverse the removal procedure.

GETtheMANUALS.org

# Control Components - Footwell Vent/Duct Blend Door Actuator

Removal and Installation

## Removal

All vehicles

1. Disconnect the battery ground cable.
   For additional information, refer to Section 414-01 Battery, Mounting and Cables.
2. Remove the front footwell duct left-hand.
   For additional information, refer to Section 412-01 Air Distribution and Filtering.

Left-hand drive vehicles

3. Reposition the in-vehicle temperature sensor venturi pipe.

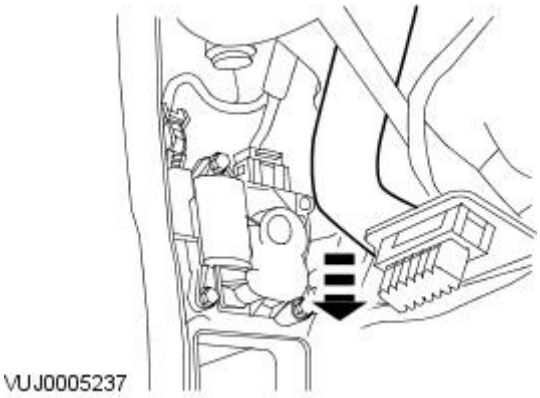


All vehicles

4. Remove the footwell vent/duct blend door actuator.
   1. Disconnect the electrical connector.
   2. Remove the retaining bolts.
   3. Remove the footwell vent/duct blend door actuator.

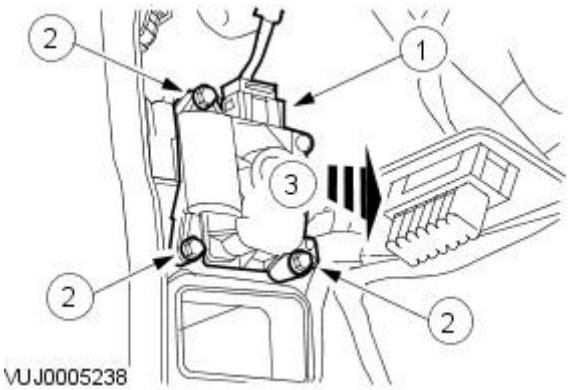


## Installation

1. NOTE: During installation make sure the actuator is fully meshed with the driven flap before tightening the bolts.

   To install, reverse the removal procedure.

GETtheMANUALS.org

# Control Components - Instrument Panel Blend Door Actuator

Removal and Installation

## Removal

All vehicles

1. Disconnect the battery ground cable.
   For additional information, refer to: Battery Disconnect and Connect (414-01 Battery, Mounting and Cables, General Procedures).

Left-hand drive vehicles only

2. Remove the glove compartment.
   For additional information, refer to: Glove Compartment (501-12 Instrument Panel and Console, Removal and Installation).
3. Disconnect the instrument panel blend door actuator remote linkage.
   1. Disconnect the electrical connector.
   2. Disconnect the instrument panel blend door actuator remote linkage.

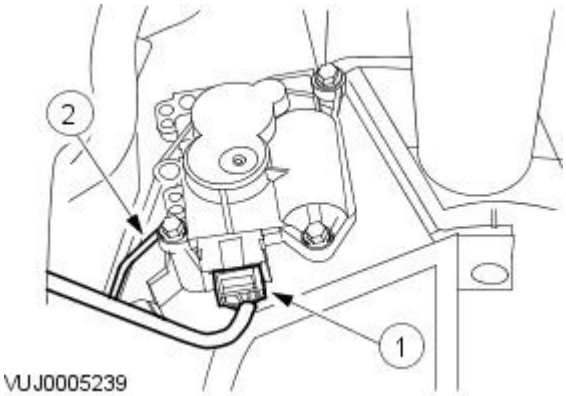


4. Remove the instrument panel blend door actuator.
   1. Remove the retaining bolts.
   2. Remove the instrument panel blend door actuator.

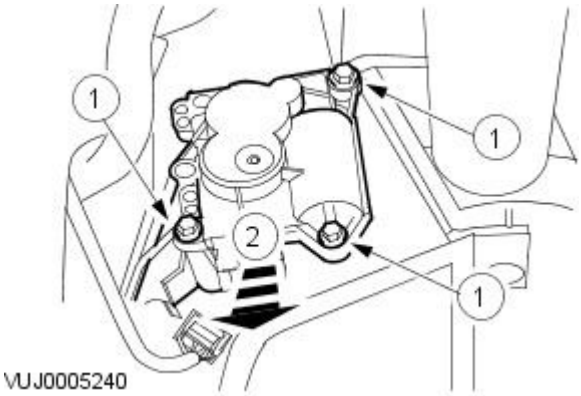


Right-hand drive vehicles

5. Remove the instrument cluster.
   For additional information, refer to: Instrument Cluster (413-01 Instrument Cluster, Removal and Installation).
6. Disconnect the instrument panel blend door actuator remote linkage.
   1. Disconnect the electrical connector.
   2. Disconnect the instrument panel blend door actuator remote linkage.

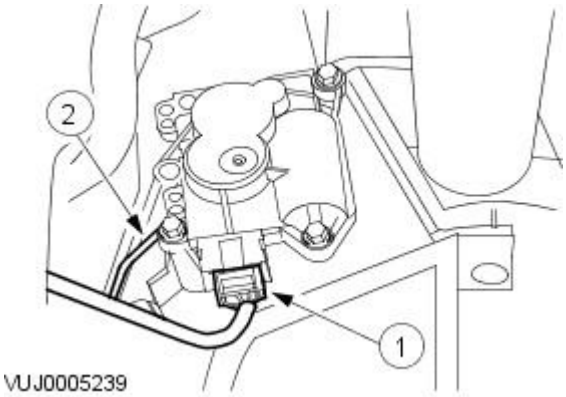


GETtheMANUALS.org

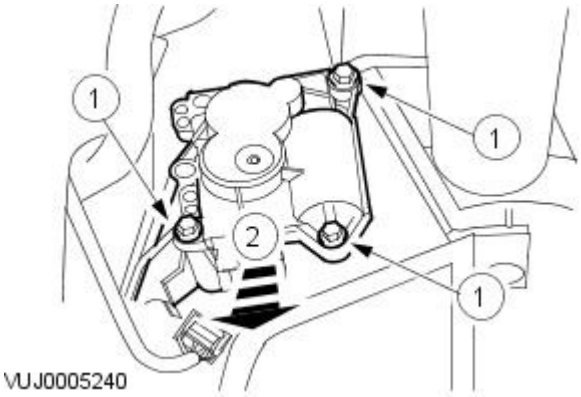


**7.** Remove the instrument panel blend door actuator.

1. Remove the retaining bolts.
2. Remove the instrument panel blend door actuator.

## Installation

**1.** NOTE: During installation make sure the actuator is fully meshed with the driven flap before tightening the bolts.

To install, reverse the removal procedure.

GETtheMANUALS.org

# Control Components - In-Vehicle Temperature Sensor

Removal and Installation

All vehicles.

1. Reposition the steering column to its maximum rearward position.
2. Disconnect the battery ground cable.
   For additional information, refer to Section 414-01 Battery, Mounting and Cables.

Left-hand drive vehicles.

3. Remove the ignition lock cylinder.
   For additional information, refer to Section 211-04 Steering Column.

All vehicles.

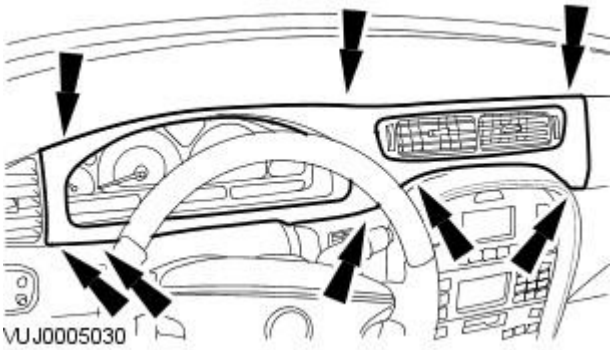


4. CAUTION: Make sure damage does not occur to the instrument panel finish panel.

   Remove the instrument panel finish panel.

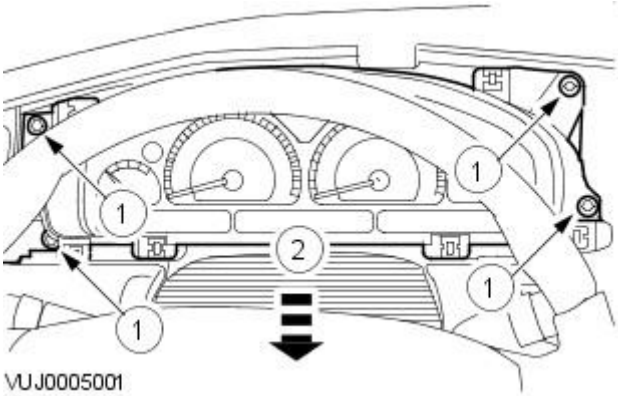


5. Remove the instrument cluster finish panel.
   1. Remove the retaining screws.
   2. Remove the instrument cluster finish panel.

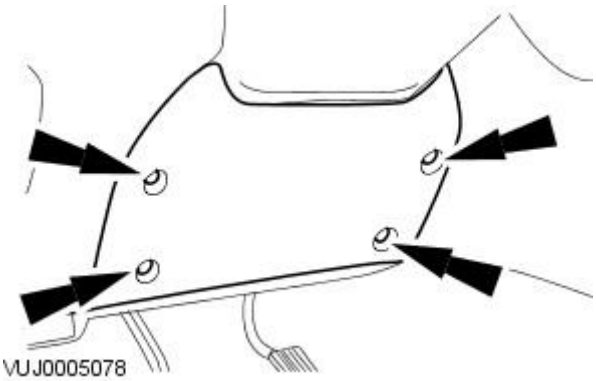


6. Remove the instrument panel lower trim panel.

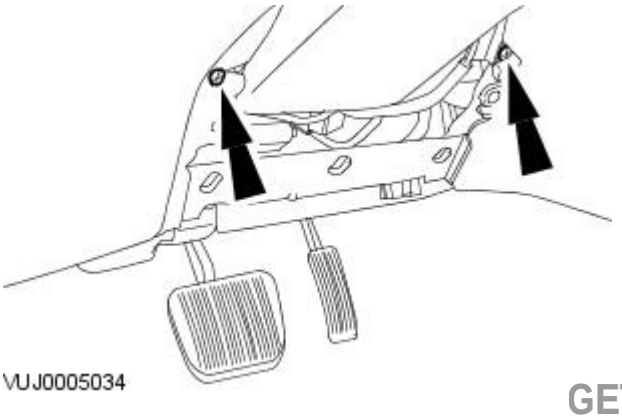


7. Remove the steering column finish panel retaining screws.

GETtheMANUALS.org

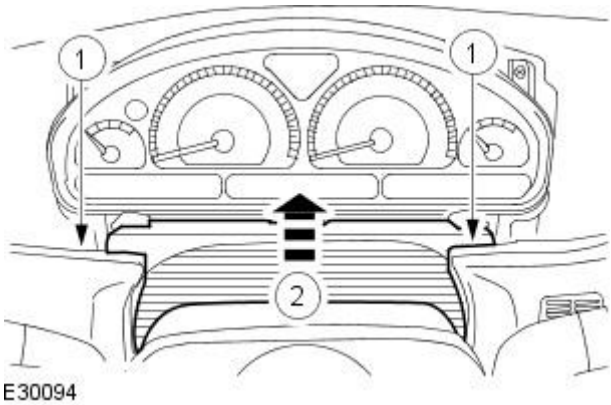


**8.** Remove the steering column finish panel.

1. Remove the steering column finish panel retaining screws.
2. Remove the steering column finish panel.

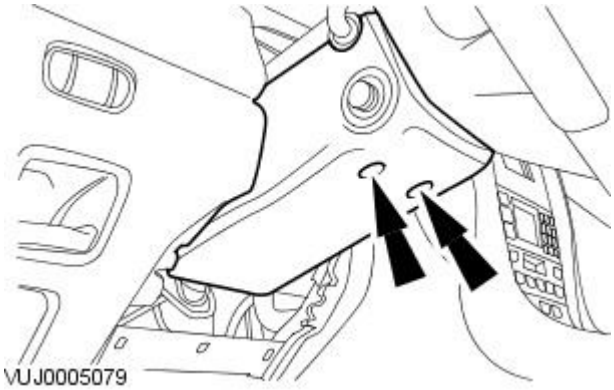


**9.** Detatch the steering column lower shroud.

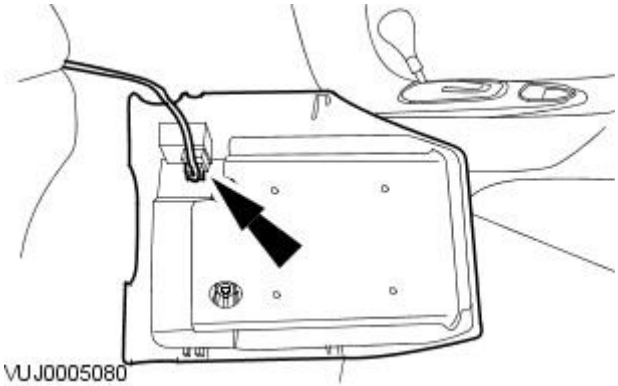


**10.** Remove the lower steering column lower shroud.

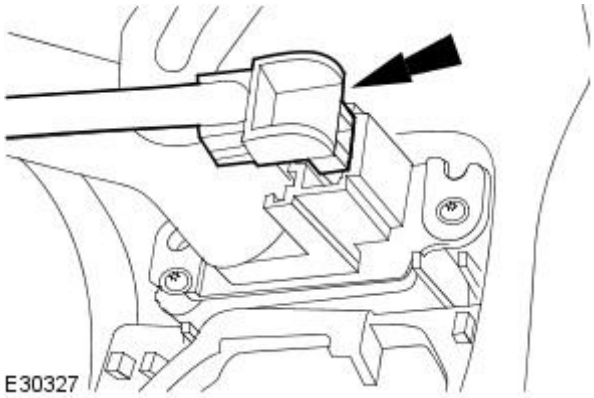


**11.** Disconnect the in-vehicle temperature sensor electrical connector.

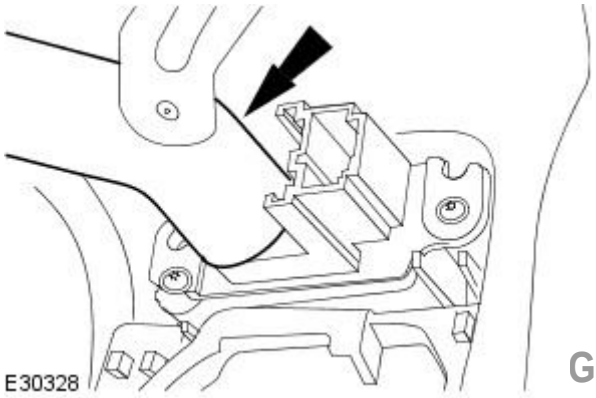


**12.** Disconnect the in-vehicle temperature sensor hose.

GETtheMANUALS.org

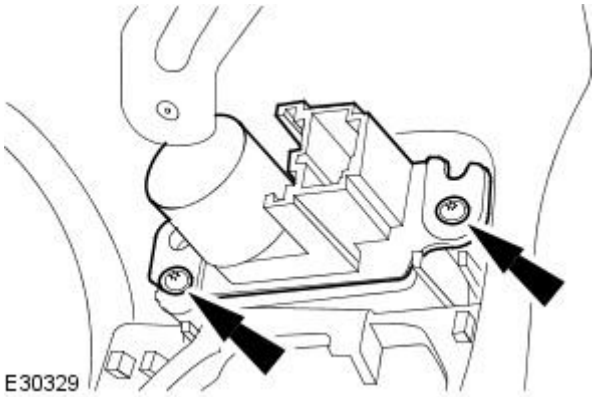


**13.** Remove the in-vehicle temperature sensor.

## Installation

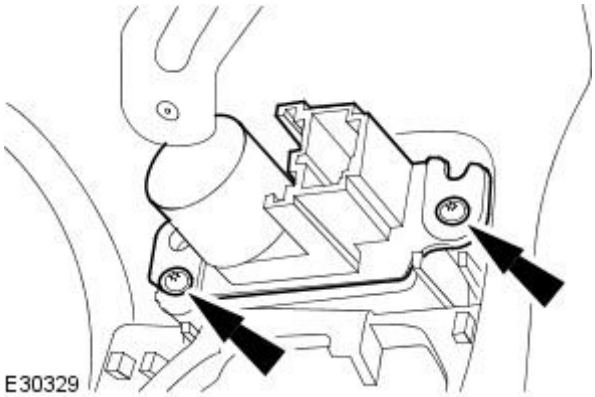


**1.** CAUTION: Make sure the in-vehicle temperature sensor is correctly installed to the instrument panel locating tang before installing the retaining screws.

To install, reverse the removal procedure.

- Tighten to 3Nm.

GETtheMANUALS.org

# Control Components - Recirculation Blend Door Actuator

Removal and Installation

## Removal

1. Remove the glove compartment.
   For additional information, refer to Section 501-12 Instrument Panel and Console.
2. Remove the recirculation blend door actuator retaining bolts.

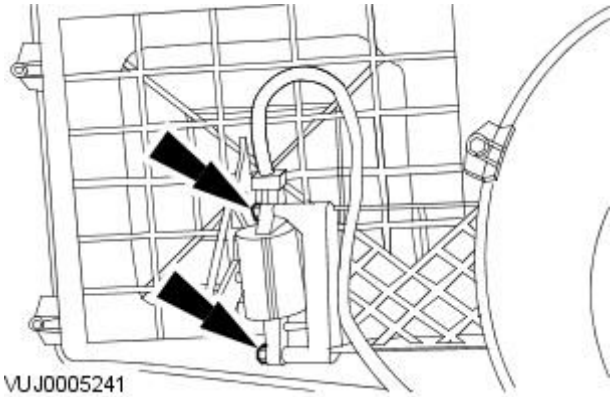


3. Disconnect the recirculation blend door actuator electrical connector.

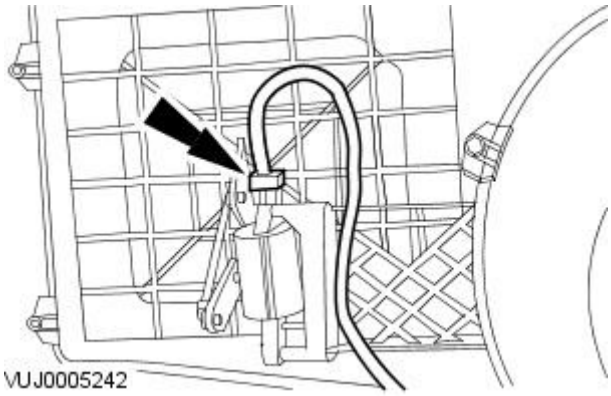


4. Remove the recirculation blend door actuator.
   1. Disconnect the control rod.
   2. Remove the recirculation blend door actuator.

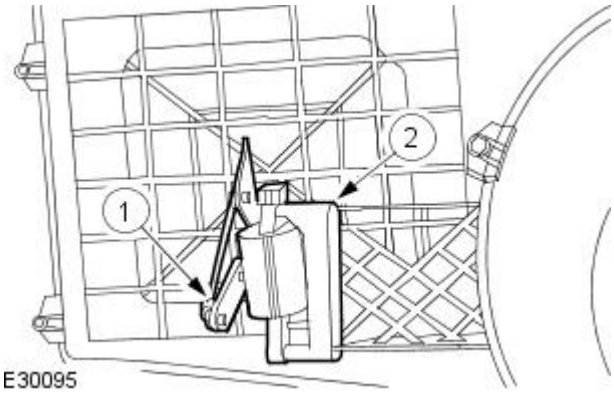


## Installation

1. NOTE: During installation make sure the actuator is fully meshed with the driven flap before tightening the bolts.

   To install, reverse the removal procedure.

GETtheMANUALS.org

# Control Components - Sunload Sensor

Removal and Installation

## Removal

1. Remove both A-pillar trim panels.
   For additional information, refer to Section 501-05 Interior Trim and Ornamentation.
2. NOTE: Left-hand shown, right-hand similar.

   Detach the instrument panel defroster vent trim panel retaining clips in the order shown.

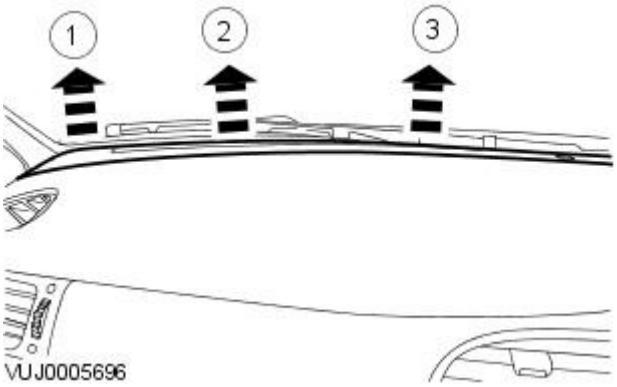


3. Detach the instrument panel defroster vent trim panel.

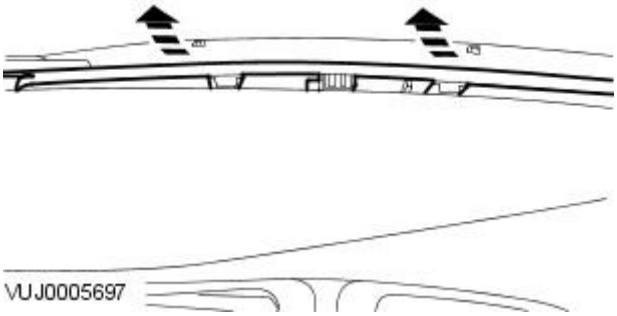


4. Detach the wiring harness from the instrument panel defroster vent trim panel.

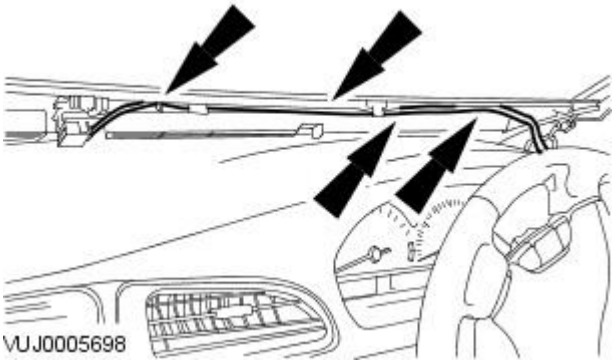


5. Remove the instrument panel defroster vent trim panel.
   - Disconnect the electrical connector.

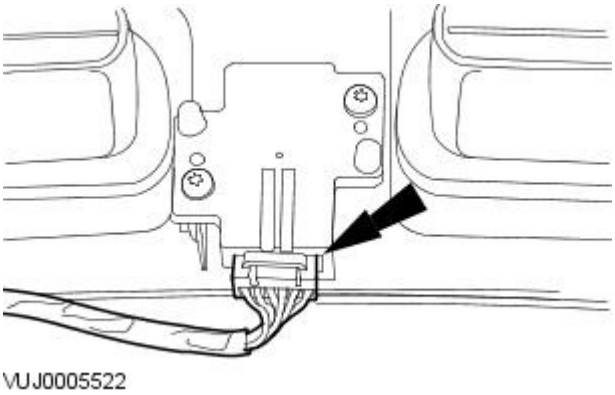


GETtheMANUALS.org

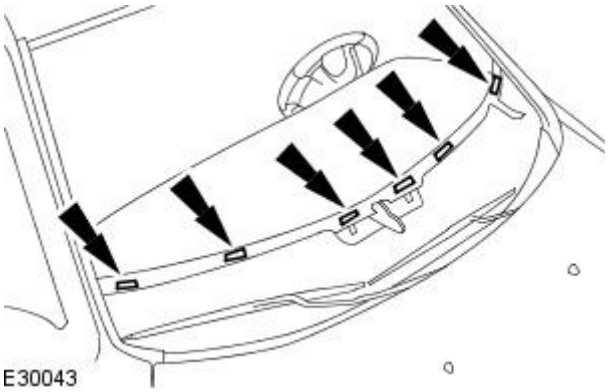


**6.** NOTE: Note the positions of the instrument panel insulators.

Remove and discard the instrument panel insulators.

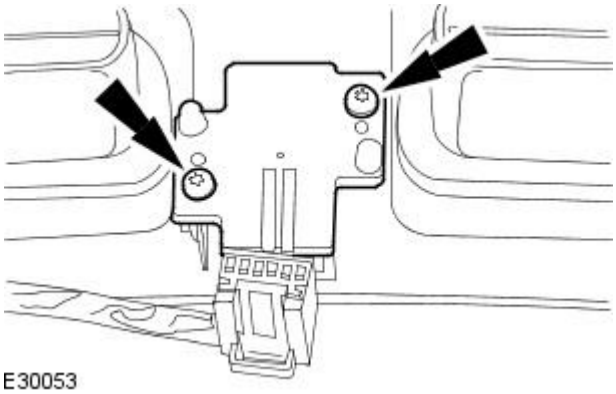


**7.** Remove the sunload sensor.

## Installation

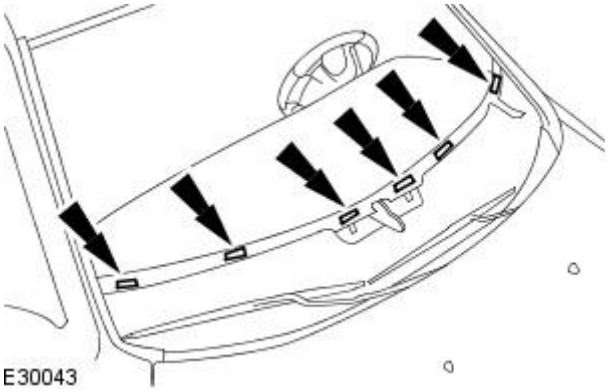


**1.** CAUTION: Make sure all adhesive has been removed from the insulator mating serfaces.

Install new instrument panel isolators into the positions noted during removal.

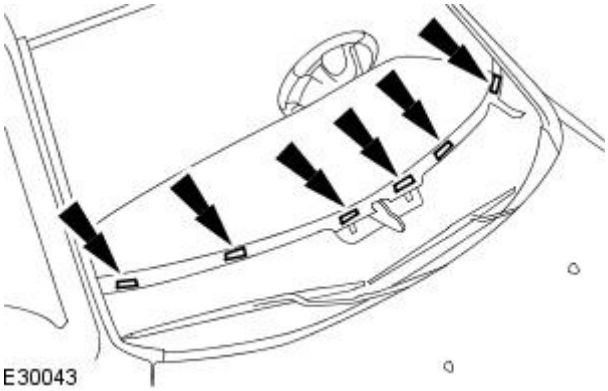


**2.** Using suitable tool, cut the insulator as shown.

1. Make sure the instrument panel isolator is in the position noted during removal.
2. Using suitable tool, cut the insulator as shown.

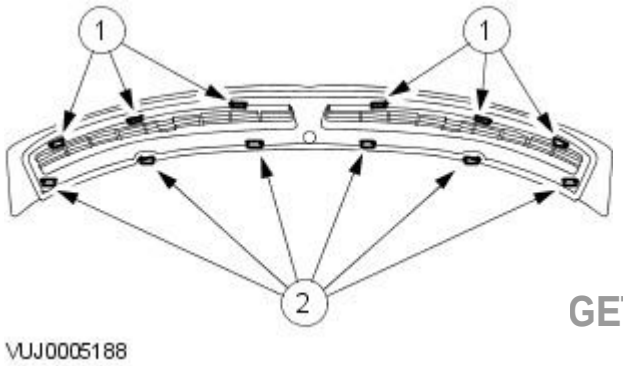


**3.** Make sure the instrument panel defroster vent trim panel rear retaining tangs are correctly located to the instrument panel defroster vent trim panel.

1. Make sure the instrument panel defroster vent trim panel front retaining tangs are correctly located to the instrument panel defroster vent trim panel.
2. Make sure the instrument panel defroster vent trim panel rear retaining tangs are correctly located to the instrument panel defroster vent trim panel.

GETtheMANUALS.org

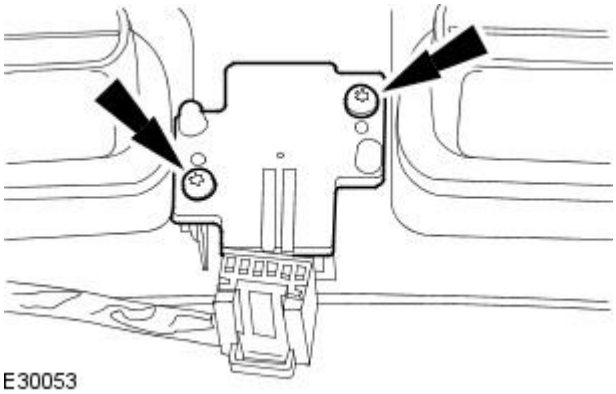


**4.** Install the new sunload sensor.

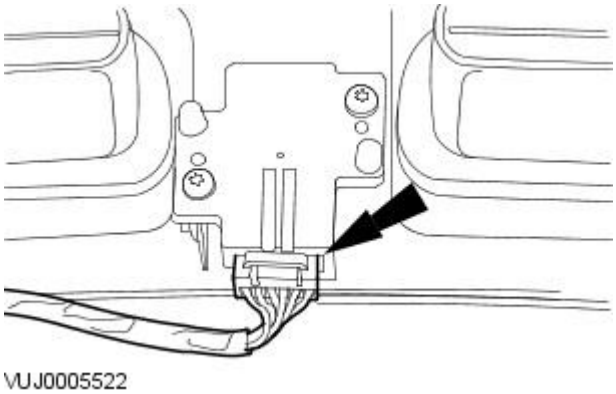


**5.** Install the instrument panel defroster vent trim panel.

- Connect the electrical connector.

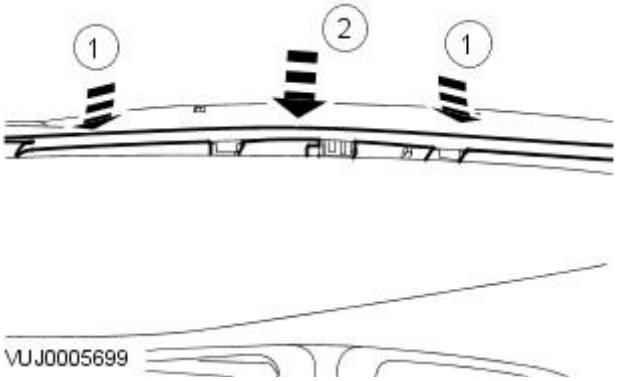


**6.** Attach the instrument panel defroster vent trim panel.

1. Locate the instrument panel defroster vent trim panel front retaining tangs.
2. Attach the instrument panel defroster vent trim panel.

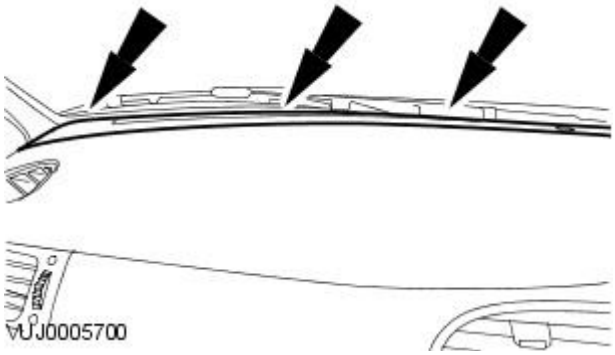


**7.** NOTE: Left-hand shown, right-hand similar.

Attach the instrument panel defroster vent trim panel.

- Locate the instrument panel defroster vent trim panel retaining clips.

**8.** Install both A-pillar trim panels.
For additional information, refer to Section 501-05 Interior Trim and Ornamentation.

GETtheMANUALS.org

# Instrument Cluster and Panel Illumination - Instrument Cluster and Panel Illumination

Diagnosis and Testing

1. **1.** Verify the customer concern.
2. **2.** Visually inspect for obvious signs of mechanical or electrical damage.

**Visual Inspection Chart**

| Mechanical | Electrical |
|---|---|
| • Fluid level(s)<br>• Accessory installations | • Bulbs(s)<br>• Fuse(s)<br>• Wiring harness<br>• Electrical connector(s)<br>• Engine compartment components<br>• Underbody components<br>• Instrument cluster<br>• Front electronic module (FEM)<br>• Dimmer switch<br>• Headlamp switch<br>• Autolamp sensor<br>• Ignition switch |

3. **3.** If an obvious cause for an observed or reported concern is found, correct the cause (if possible) before proceeding to the next step.
4. **4.** If the cause is not visually evident, verify the symptom and refer to the Jaguar approved diagnostic system.

GETtheMANUALS.org

# Instrument Cluster -

**General specifications**

| Item | Specification |
|---|---|
| Illumination bulb. | 3.0 Watt |

GETtheMANUALS.org

# Instrument Cluster - Instrument Cluster

Description and Operation

## Vehicles built up to 01/2004

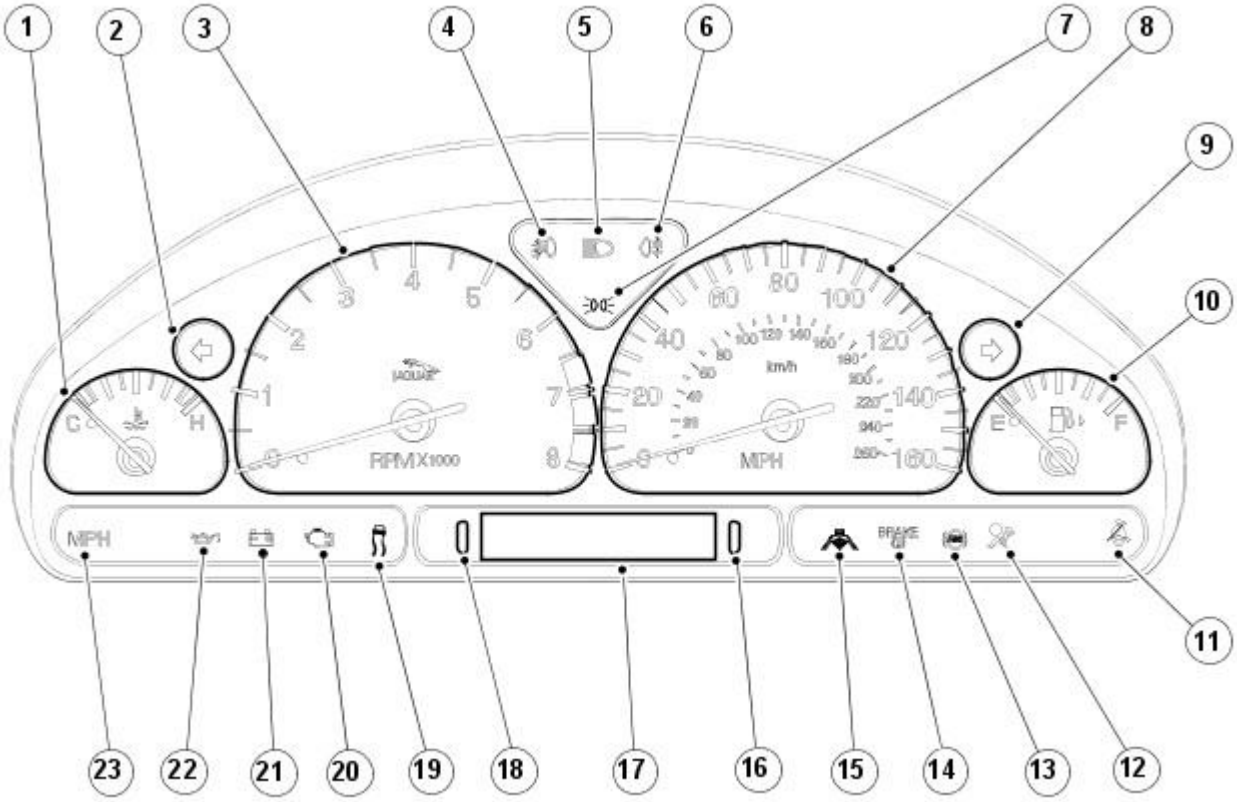


VUJ0005403

| Item | Part Number | Description |
|---|---|---|
| 1 | — | Engine temperature gauge |
| 2 | — | Left-hand direction indicator |
| 3 | — | Tachometer |
| 4 | — | Front fog lamps indicator |
| 5 | — | High beam indicator |
| 6 | — | Rear fog lamps indicator |
| 7 | — | Side lamps indicator |
| 8 | — | Speedometer |
| 9 | — | Right-hand direction indicator |
| 10 | — | Fuel gauge |
| 11 | — | Safety belt warning indicator |
| 12 | — | Air bag warning indicator |
| 13 | — | Anti-lock Brake System (ABS) warning indicator |
| 14 | — | Parking brake, low brake fluid indicator |
| 15 | — | Adaptive speed control indicator |
| 16 | — | Message center red warning indicator-primary warning |
| 17 | — | Message center display |
| 18 | — | Message center amber warning indicator-secondary warning |
| 19 | — | Traction control, Dynamic Stability control (DSC) warning lamp |
| 20 | — | Check engine warning indicator |
| 21 | — | Battery charge warning indicator |
| 22 | — | Engine oil pressure warning indicator |
| 23 | — | Vehicle overspeed warning indicator |

The instrument cluster provides the driver with information, indicators and warning indicators on the vehicle systems.

The gauges and warning indicators may use the outputs from common sensors to carry out their respective functions.

For European vehicles the anti-lock brake system (ABS) and electric park brake system, the warning indicator is combined, illuminating as an amber exclamation mark.

Instrument cluster bulbs.

There are ten serviceable bulbs fitted to the instrument cluster. Two are indicator bulbs, one fitted each side of the instrument cluster. The remaining bulbs are backlighting bulbs.

## Vehicles built 02/2004 onwards

GETtheMANUALS.org

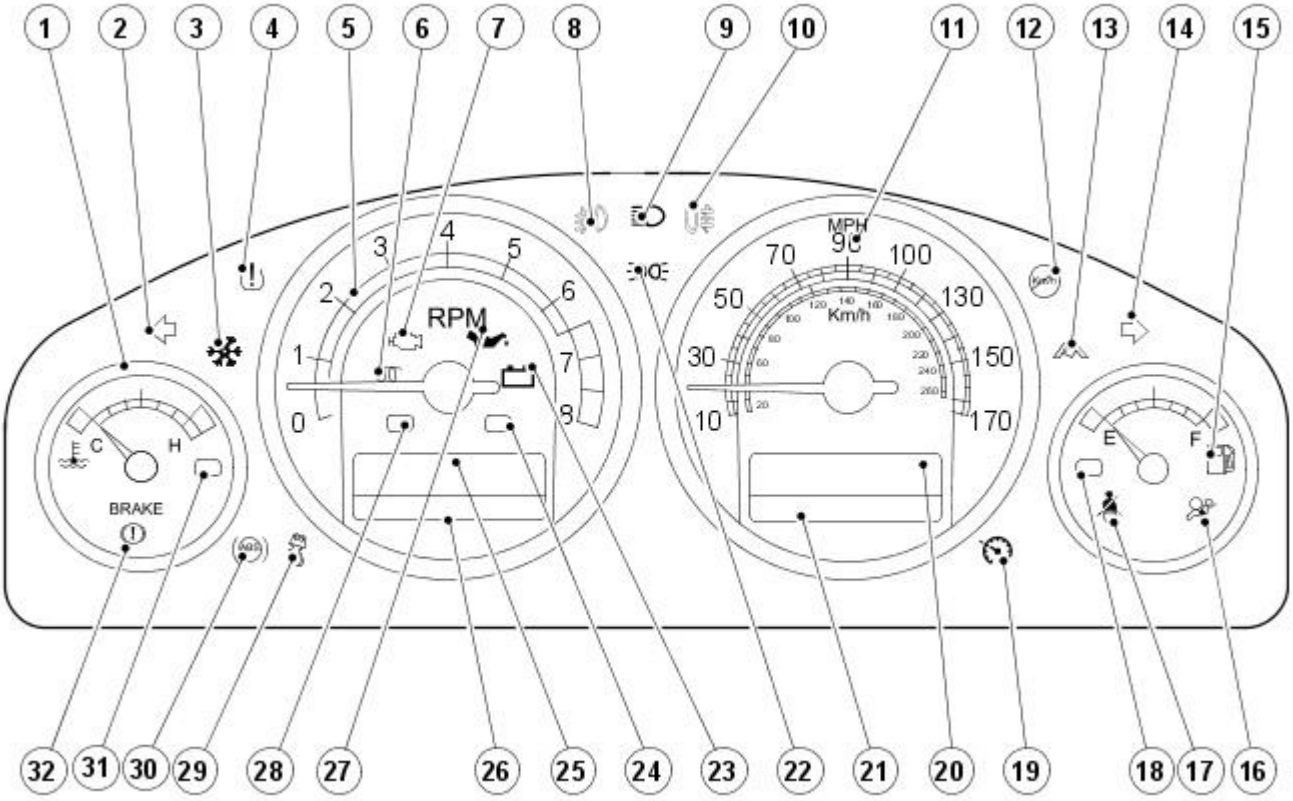


E49503

| Item | Part Number | Description |
|---|---|---|
| 1 | — | Engine temperature gauge |
| 2 | — | Left-hand direction indicator |
| 3 | — | Low exterior temperature warning |
| 4 | — | Tyre Pressure Monitor System |
| 5 | — | Tachometer |
| 6 | — | Pre heat warning light |
| 7 | — | Check engine warning indicator |
| 8 | — | Front fog lamps indicator |
| 9 | — | High beam indicator |
| 10 | — | Rear fog lamps indicator |
| 11 | — | Speedometer |
| 12 | — | Vehicle overspeed warning indicator |
| 13 | — | Adaptive speed control indicator |
| 14 | — | Right-hand direction indicator |
| 15 | — | Fuel gauge |
| 16 | — | Air bag warning indicator |
| 17 | — | Safety belt warning indicator |
| 18 | — | Low fuel warning indicator |
| 19 | — | Cruise control |
| 20 | — | ACC / Cruise Control information |
| 21 | — | Clock |
| 22 | — | Side lamps indicator |
| 23 | - | Battery charge warning indicator |
| 24 | - | Message center red warning indicator-primary warning |
| 25 | - | Message center |
| 26 | - | Odometer |
| 27 | - | Engine oil pressure warning indicator |
| 28 | - | Message center amber warning indicator-secondary warning |
| 29 | - | Traction control, Dynamic Stability control (DSC) warning lamp |
| 30 | - | Anti-lock Brake System (ABS) warning indicator |
| 31 | - | Engine temperature warning indicator |
| 32 | - | Parking brake, low brake fluid indicator |

The instrument cluster provides the driver with information, indicators and warning indicators on the vehicle systems.

The gauges and warning indicators may use the outputs from common sensors to carry out their respective functions.

For European vehicles the anti-lock brake system (ABS) and electric park brake system, the warning indicator is combined, illuminating as an amber exclamation mark.

GETtheMANUALS.org

# Instrument Cluster - Instrument Cluster

Diagnosis and Testing

1. **1.** Verify the customer concern.
2. **2.** Visually inspect for obvious signs of electrical damage.

**Visual Inspection Chart**

| Mechanical | Electrical |
|---|---|
| • Fluid level(s)<br>• Accessory installations | • Bulbs(s)<br>• Fuse(s)<br>• Wiring harness<br>• Electrical connector(s)<br>• Engine compartment components<br>• Underbody components<br>• Instrument cluster |

3. **3.** If an obvious cause for an observed or reported concern is found, correct the cause (if possible) before proceeding to the next step.
4. **4.** If the cause is not visually evident, verify the symptom and refer to the Jaguar Approved Diagnostic System.

GETtheMANUALS.org

# Instrument Cluster - Indicator BulbVehicles Built Up To: 01/2004

Removal and Installation

## Removal

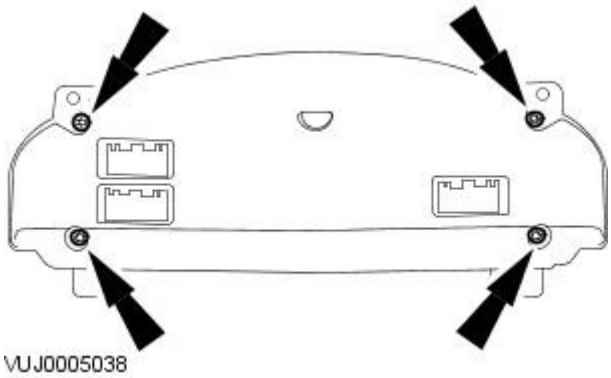


**1.** Remove the instrument cluster.
For additional information, refer to Instrument Cluster in this section.

**2.** CAUTION: Disassembly and assembly of the instrument cluster must only be carried out in an electrostatically protected area.

Remove the instrument cluster housing.

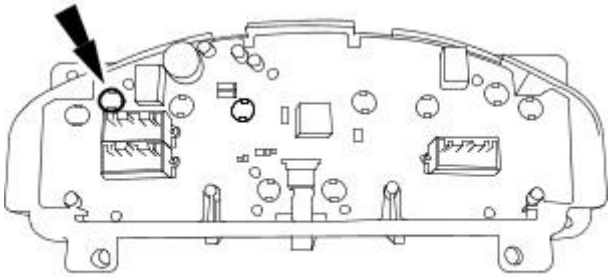


**3.** Remove the indicator bulb.

## Installation

**1.** To install, reverse the removal procedure.

GETtheMANUALS.org

# Instrument Cluster - Instrument Cluster

Removal and Installation

## Removal

All vehicles

**1.** CAUTION: Do not leave the instrument cluster face down for any length of time.

Reposition the steering column to its maximum rearward position.

**2.** Disconnect the battery ground cable.
For additional information, refer to: Battery Ground Cable (414-01 Battery, Mounting and Cables, Removal and Installation).

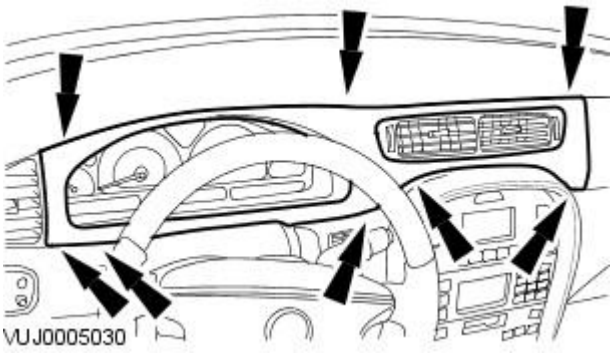


**3.** CAUTION: Make sure damage does not occur to the instrument panel finish panel.

Remove the instrument panel finish panel.

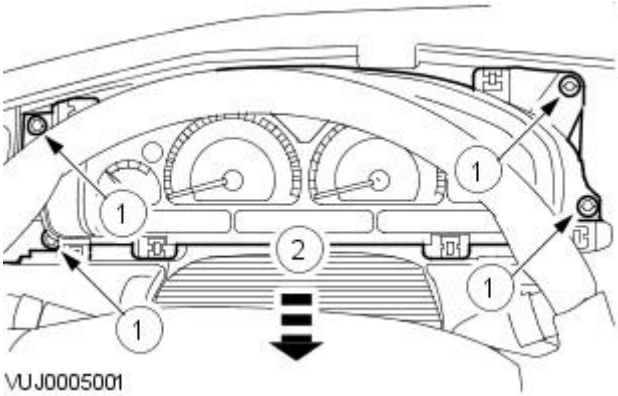


**4.** Remove the instrument cluster finish panel.

1. Remove the instrument cluster finish panel retaining screws.
2. Remove the instrument cluster finish panel.

Vehicles built up to 01/2004

**5.** Remove the instrument panel lower trim panel.

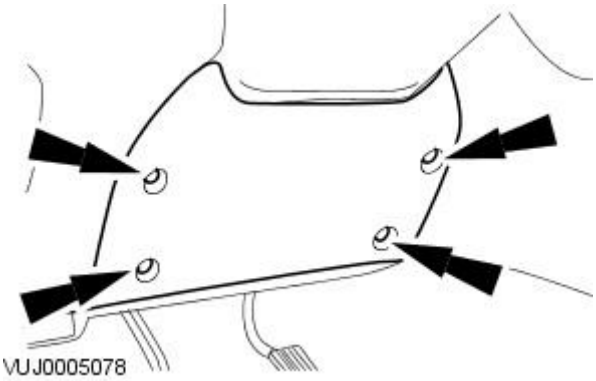


**6.** Remove the steering column finish panel retaining screws.

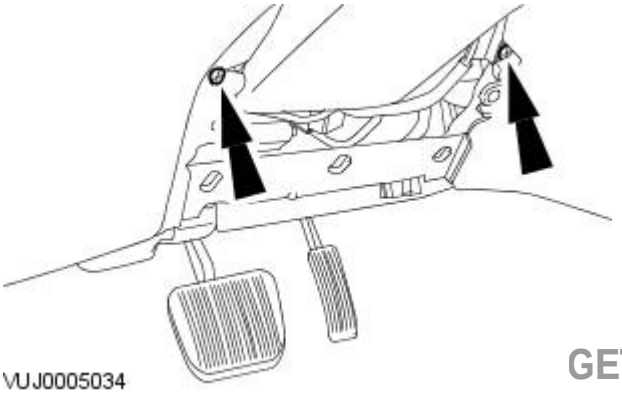


GETtheMANUALS.org

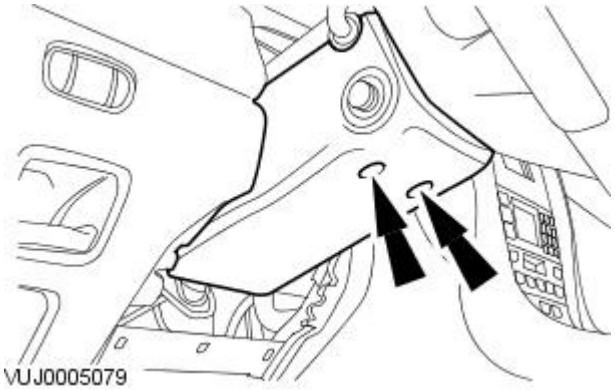


**7.** Detach the steering column lower shroud.

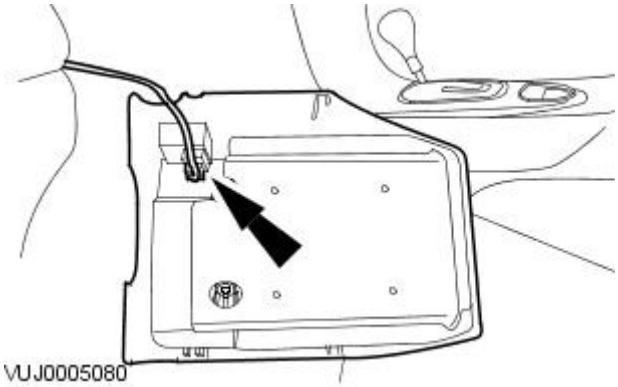


**8.** Remove the steering column lower shroud.

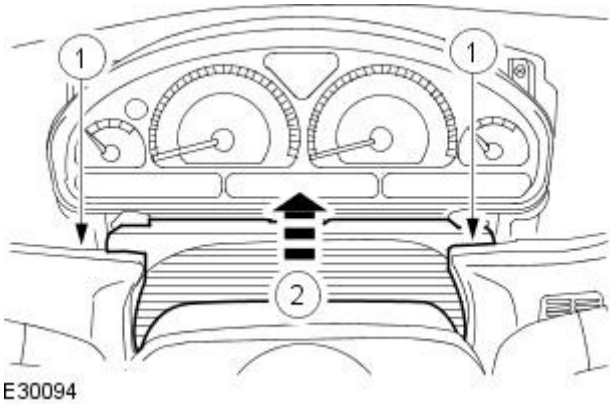


**9.** CAUTION: Make sure damage does not occur to the instrument cluster lens.

Remove the steering column finish panel.

1. Remove the steering column finish panel retaining screws.
2. Remove the steering column finish panel.

All vehicles

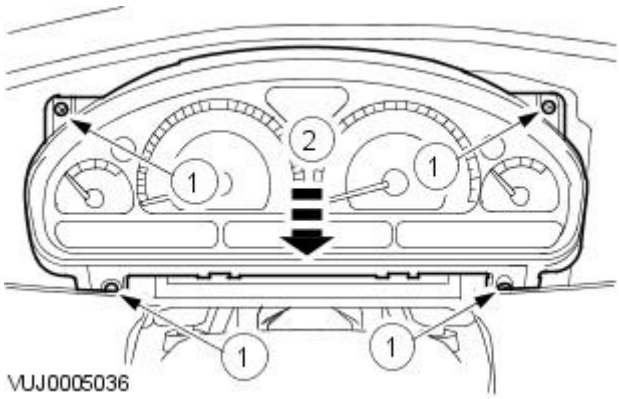


**10.** Detach the instrument cluster.

1. Remove the instrument cluster retaining screws.
2. Detach the instrument cluster.

Vehicles built up to 01/2004

GETtheMANUALS.org

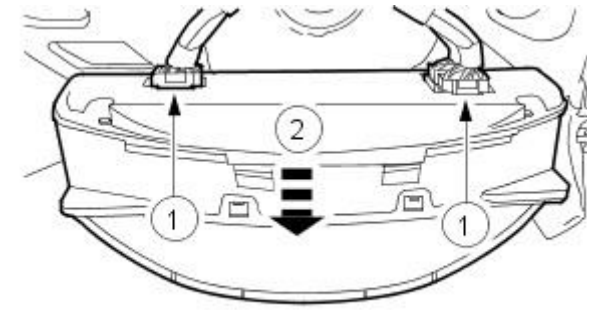

VUJ0005037

**11.** Remove the instrument cluster.

1. Disconnect the electrical connectors.
2. Remove the instrument cluster.

Vehicles built 02/2004 onwards

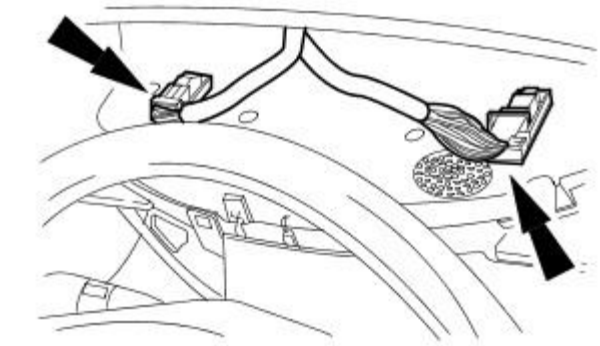
E49479

**12.** Remove the instrument cluster.

- Disconnect the electrical connectors.

## Installation

**1.** NOTE: If a new instrument cluster is to be fitted, record the eleven digit alpha numeric code from the steering column label.

To install, reverse the removal procedure.

**2.** NOTE: The position of the brake pedal crash bracket.

Detach the steering column.

- Support the weight of the steering column.

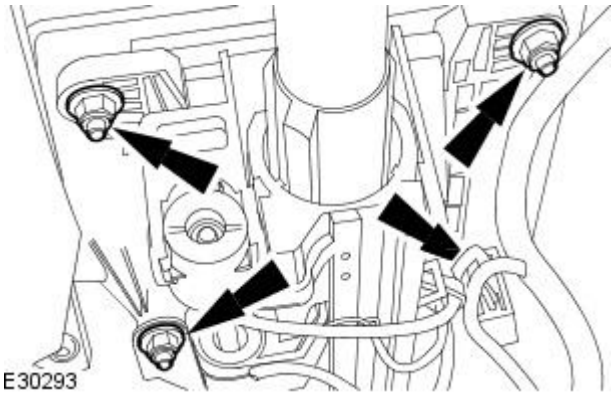
E30293

GETtheMANUALS.org

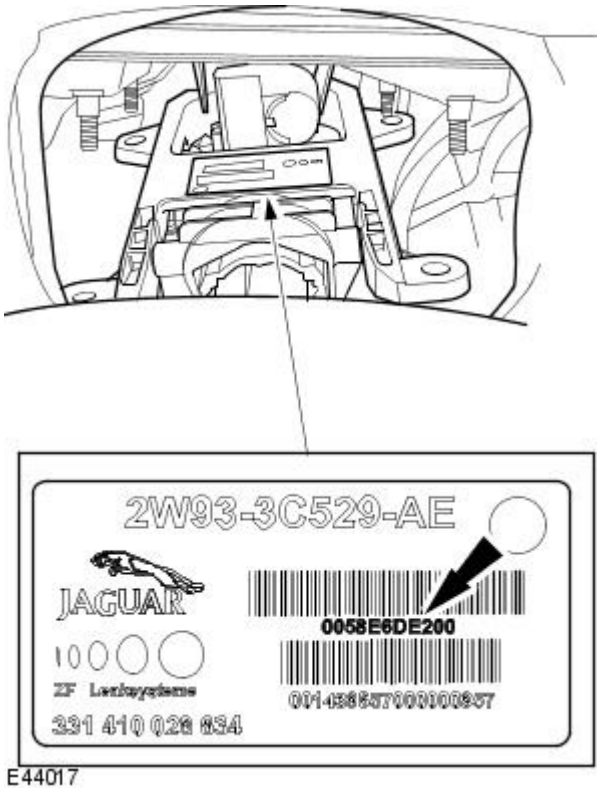


**3.** Record the eleven digit alpha numeric code from the steering column label.

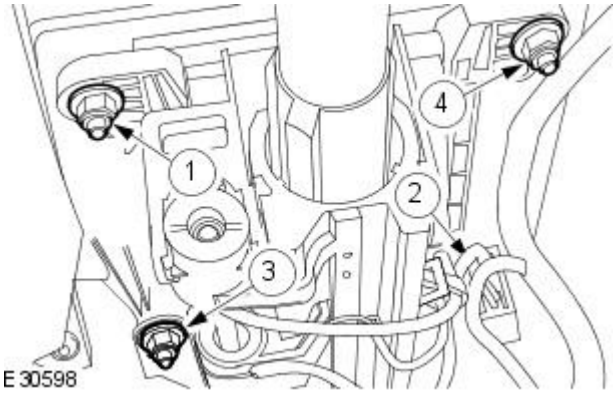


**4.** WARNING: Make sure the brake pedal crash bracket is correctly located. Failure to follow this instruction may result in personal injury.

CAUTION: Make sure the brake pedal crash bracket is correctly located. Failure to follow this instruction may result in component damage.

• NOTE: Tighten the retaining nuts in the sequence shown.

Attach the steering column.

- Tighten to 25 Nm.

**5.** NOTE: This step is only necessary when installing a new component.

Carry out the instrument cluster configuration application. For further information, refer to the Jaguar approved diagnostic system.

GETtheMANUALS.org

# Instrument Cluster - Instrument Cluster Lens

Removal and Installation

## Removal

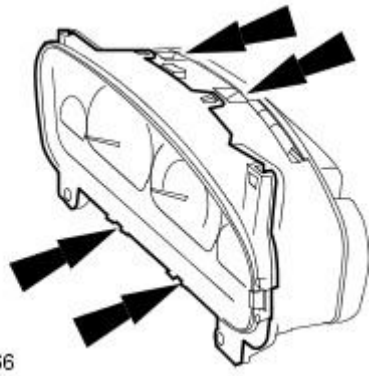


1. Remove the instrument cluster. For additional information, refer to Instrument Cluster in this section.

2. CAUTION: Disassembly and assembly of the instrument cluster must only be carried out in an electrostatically protected area.

   Remove the instrument cluster lens.

## Installation

1. CAUTION: Care must be taken when installing the cluster lens to prevent damage to the instrument cluster pointers.

   To install, reverse the removal procedure.

GETtheMANUALS.org

# Horn -

**Torque Specifications**

| Description | Nm | lb-ft | lb-in |
|---|---|---|---|
| Horn Switch Retaining Screws | 5 | — | 44 |

GETtheMANUALS.org

# Horn - Horn

Description and Operation

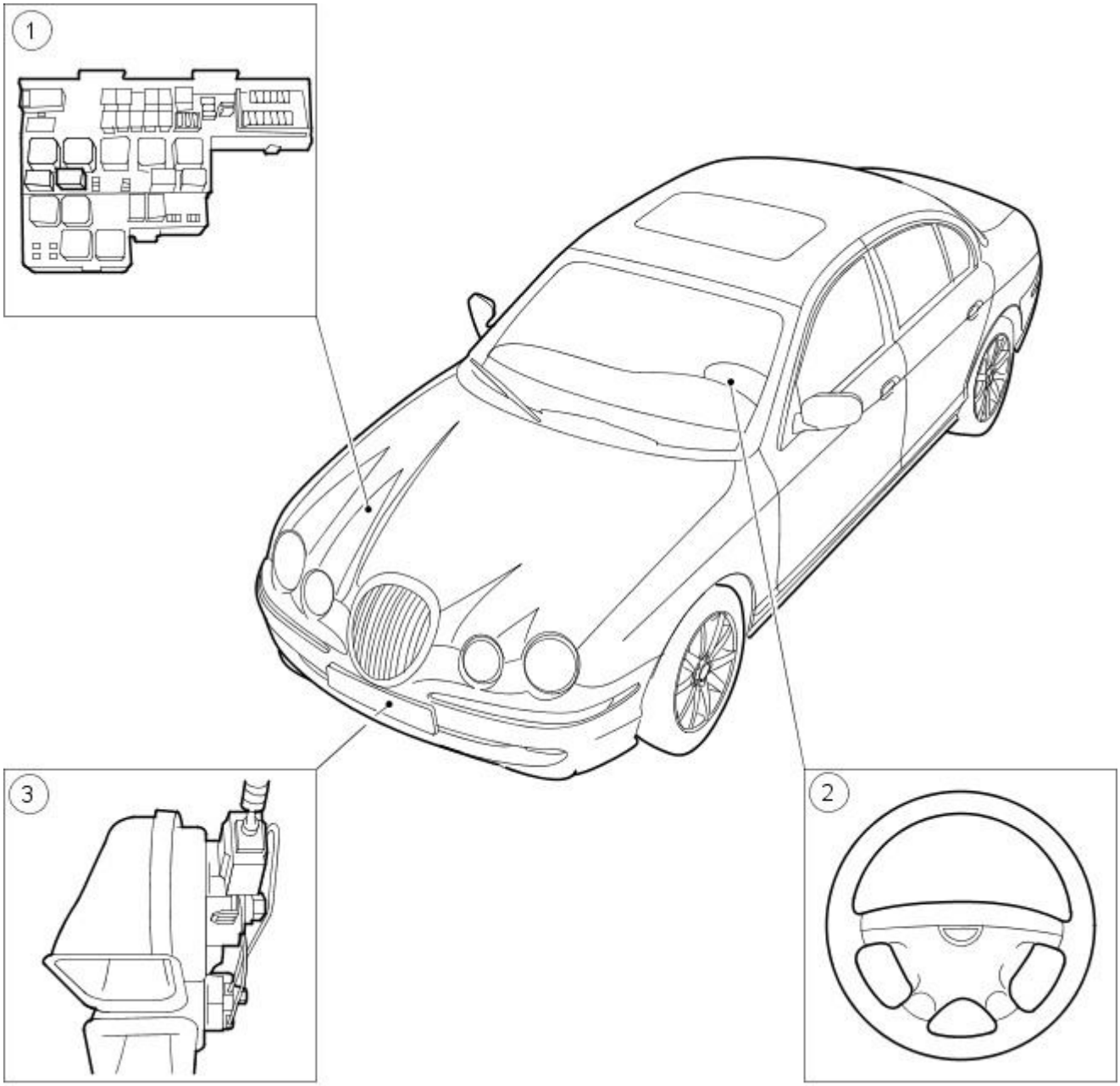


E30048

| Item | Part Number | Description |
|---|---|---|
| 1 | — | Horn relay |
| 2 | — | Horn switch |
| 3 | — | Horn |

The horn system includes the following:

- Power distribution box fuse 16 (15A)
- Horn relay
- Horn
- Air bag sliding contact
- Steering wheel control switch harness
- Horn switch
- Generic Electronic Module (GEM)

The horn system is designed to sound the horn when the horn switch is operated. The horn relay is supplied voltage at all times through the power distribution box fuse 16 (15A). Operating the horn switch provides a ground circuit to the coil side of the horn relay. In turn, the switch side of the horn relay is closed, allowing voltage to be applied to the horn.

GETtheMANUALS.org

# Horn - Horn

Diagnosis and Testing

## Overview

The horns for this model year now operate through the front electronic module rather than the general electronic module as in previous years.

The rest of the circuit remains the same, operating across the standard corporate protocol (SCP) network between modules and hard-wired elsewhere.

For additional information, refer to the electrical guides.

## Inspection and verification

1. **1.** Verify the customer concern.
2. **2.** Visually inspect for obvious signs of mechanical or electrical damage.

**Visual inspection chart**

| Mechanical | Electrical |
|---|---|
| • Horn assembly fitment<br>• Damage to horns | • Fuse 16, front power distribution fuse box<br>• Horn relay<br>• Clockspring<br>• Horn switch<br>• Harness<br>• Connectors, pin condition and security, casing security<br>• SCP network<br>• Front power distribution fuse box (FPDB)<br>• Front electronic module (FEM)<br>• Instrument cluster |

3. **3.** If an obvious cause for an observed or reported concern is found, correct the cause (if possible) before proceeding to the next step.

Using the Jaguar approved diagnostic system or a scan tool, check for diagnostic trouble codes (DTCs) indicating an SCP network fault.

## Symptom chart

| Symptom | Possible cause | Action |
|---|---|---|
| Horn sounds continuously | • Horn switch fault (debris, stuck contact, etc)<br>• Horn relay fault<br>• Short circuit to ground in the relay circuit<br>• Short circuit to power in the horn circuit | For horn circuit (horn sounding continuously) tests. GO to Pinpoint Test C. |
| Horn inoperative | • Horn switch fault (corrosion, damage, etc)<br>• Horn relay fault<br>• High resistance in horn and/or relay circuit(s) | For horn circuit (horn inop) tests. GO to Pinpoint Test A. For horn switch and circuit tests. GO to Pinpoint Test B. |

## Pinpoint tests

CAUTION: When probing connectors to take measurements in the course of the pinpoint tests, use the adaptor kit, part number 3548-1358-00.

• NOTE: When carrying out tests, always use a digital multi-meter (DMM) accurate to 3 decimal places, and with an up-to-date calibration certificate. When testing resistance, always take the resistance of the DMM leads into account.

| PINPOINT TEST A : HORN CIRCUIT AND RELAY | | |
|---|---|---|
| **TEST CONDITIONS** | **DETAILS/RESULTS/ACTIONS** | |
| **A1: CHECK FOR VOLTAGE AT THE HORN ASSEMBLY** | | |
| | 1 Disconnect the horn connector, FH29. | |
| | 2 Connect a voltmeter between: | |
| | **FH29, harness side** | **Battery** |
| | Pin 01 | Negative terminal |
| | 3 Operate the horn switch and monitor the meter reading. | |
| | Is voltage present at the horn with the switch pressed?<br>**Yes**<br>GO to A2.<br>**No**<br>GO to A3. | |
| **A2: CHECK FOR GROUND AT THE HORN ASSEMBLY** | | |
| | 1 Measure the resistance between: | |
| | **FH29, harness side** | **Battery** |
| | Pin 02 | Negative terminal |

GETtheMANUALS.org

Is the resistance less than 10 ohms?
**Yes**
INSTALL a new horn assembly.
REFER to: Horn (413-06 Horn, Removal and Installation).
Test for normal operation.
**No**
REPAIR the high resistance circuit. For additional information, refer to the electrical guides. Test for normal operation.

**A3: CHECK THE HORN POWER CIRCUIT FOR HIGH RESISTANCE**

1. Remove the horn relay (relay 12, front power distribution fuse box).
2. Measure the resistance between:

| FH29, harness side | Relay base |
|---|---|
| Pin 01 | Pin 05 |

Is the resistance less than 10 ohms?
**Yes**
GO to A4.
**No**
REPAIR the high resistance circuit. For additional information, refer to the electrical guides. Test for normal operation.

**A4: CHECK THE POWER SUPPLIES TO THE HORN RELAY**

1. Measure the voltage between:

| Relay base | Battery |
|---|---|
| Pin 01 | Negative terminal |
| Pin 03 | |

Are both voltages greater than 10 volts?
**Yes**
GO to A5.
**No**
REPAIR the power supply circuit(s). This circuit includes fuse 16 of the front power distribution fuse box (see visual inspection). For additional information, refer to the electrical guides. Test for normal operation.

**A5: CHECK THE HORN RELAY SIGNAL**

1. Connect an ohmmeter between:

| Relay base | Battery |
|---|---|
| Pin 02 | Negative terminal |

2. Operate the horn switch and monitor the meter reading.
   - Check the switch at all four corners of the horn push pad

Does the resistance switch to less than 10 ohms when the horn switch is operated?
**Yes**
INSTALL a new horn relay. Test for normal operation.
**No**
GO to A6.

**A6: CHECK THE HORN RELAY SIGNAL CIRCUIT FOR HIGH RESISTANCE**

1. Disconnect the front electronic module connector, FH59.
2. Measure the resistance between:

| FH59, harness side | Relay base |
|---|---|
| Pin 08 | Pin 02 |

Is the resistance less than 10 ohms?
**Yes**
CHECK for DTCs indicating a front electronic module or SCP network fault. For horn switch and circuit tests. GO to Pinpoint Test B.
**No**
REPAIR the high resistance circuit. For additional information, refer to the electrical guides. Test for normal operation.

## PINPOINT TEST B : HORN SWITCH AND CIRCUITS

WARNING: The backup power supply energy must be depleted before any supplementary restraint system components are disconnected. To deplete the backup supply energy, disconnect the battery negative cable and wait one minute to avoid accidental deployment and personal injury. Failure to follow this instruction may result in personal injury.

| TEST CONDITIONS | DETAILS/RESULTS/ACTIONS |
|---|---|

**B1: CHECK THE HORN SWITCH OPERATION AFTER THE CLOCKSPRING**

1. Disconnect the battery negative terminal.
2. Disconnect the clockspring connector, FC117.
3. Connect an ohmmeter between:

| FC117, component side | FC117, component side |
|---|---|
| Pin 06 | Pin 07 |

4. Operate the horn switch and monitor the meter reading.
   - Check the switch at all four corners of the horn push pad

Does the resistance switch to less than 10 ohms when the horn switch is operated?
**Yes**
GO to B2.
**No**
GO to B3.

**B2: CHECK THE HORN SWITCH TO INSTRUMENT CLUSTER CIRCUIT FOR HIGH RESISTANCE**

1. Disconnect the instrument cluster connector, FC8.
2. Measure the resistance between:

| FC117, harness side | FC8, harness side |
|---|---|
| Pin 07 | Pin 09 |

Is the resistance less than 10 ohms?
**Yes**
INSTALL a new horn switch.
REFER to: Horn Switch (413-06 Horn, Removal and Installation).
Test for normal operation.
**No**
REPAIR the high resistance circuit. For additional information, refer to the electrical guides. Test for normal

GETtheMANUALS.org

operation.

**B3: CHECK THE HORN SWITCH OPERATION BEFORE THE CLOCKSPRING**

1. Remove the driver airbag assembly.
2. Disconnect the horn switch connector, SQ5.
3. Connect an ohmmeter between:

| SQ5, component side | SQ5, component side |
|---|---|
| Pin 01 | Pin 02 |

4. Operate the horn switch and monitor the meter reading.
   - Check the switch at all four corners of the horn push pad

Does the resistance switch to less than 10 ohms when the horn switch is operated?

**Yes**
GO to B5.

**No**
GO to B4.

**B4: CHECK THE HARNESS BETWEEN THE HORN SWITCH AND THE CLOCKSPRING FOR HIGH RESISTANCE**

1. Remove the steering wheel.
2. Disconnect the clockspring connector, SQ2.
3. Measure the resistance between:

| SQ5, harness side | SQ2, harness side |
|---|---|
| Pin 02 | Pin 05 |
| Pin 01 | Pin 04 |

Is the resistance less than 10 ohms?

**Yes**
GO to B5.

**No**
REPAIR the high resistance circuit. For additional information, refer to the electrical guides. Test for normal operation.

**B5: CHECK THE CLOCKSPRING FOR HIGH RESISTANCE**

1. Measure the resistance between:

| SQ2, component side | FC117, component side |
|---|---|
| Pin 04 | Pin 06 |
| Pin 05 | Pin 07 |

Is the resistance less than 10 ohms?

**Yes**
CHECK for DTCs indicating an instrument cluster, front electronic module or SCP network fault. For horn circuit and relay tests. GO to Pinpoint Test A.

**No**
INSTALL a new clockspring.
REFER to: Clockspring (501-20B Supplemental Restraint System, Removal and Installation).
Test for normal operation.

## PINPOINT TEST C : HORN CIRCUIT AND RELAY (HORN SOUNDING CONTINUOUSLY)

| TEST CONDITIONS | DETAILS/RESULTS/ACTIONS |
|---|---|

**C1: CHECK FOR SHORT CIRCUIT TO POWER IN THE HORN ASSEMBLY CIRCUIT**

1. Remove the horn relay (relay 12, front power distribution fuse box).

Does the horn stop?

**Yes**
GO to C2.

**No**
REPAIR the short circuit to power in the circuit between the front power distribution fuse box and the horn. For additional information, refer to the electrical guides. Refit the relay, test for normal operation.

**C2: CHECK FOR SHORT CIRCUIT TO GROUND IN THE FEM TO FPDB CIRCUIT**

1. Disconnect the FEM connector, FH59.
2. Measure the resistance between:

| FH59, harness side | Battery |
|---|---|
| Pin 08 | Negative terminal |

Is the resistance greater than 100 Kohms?

**Yes**
GO to C3.

**No**
REPAIR the short circuit. For additional information, refer to the electrical guides. Test for normal operation.

**C3: CHECK FOR SHORT CIRCUIT TO GROUND IN THE HORN SWITCH TO INSTRUMENT CLUSTER CIRCUIT**

1. Disconnect the instrument cluster connector, FC8.
2. **Without** presssing the horn switch, measure the resistance between:

| FC8, harness side | Battery |
|---|---|
| Pin 09 | Negative terminal |

Is the resistance greater than 100 Kohms?

**Yes**
CHECK for DTCs indicating an instrument cluster, front electronic module or SCP network fault.

**No**
GO to C4.

**C4: CHECK THE HORN SWITCH OPERATION AFTER THE CLOCKSPRING**

1. Disconnect the battery negative terminal.
2. Disconnect the clockspring connector, FC117.
3. Connect an ohmmeter between:

| FC117, component side | FC117, component side |
|---|---|
| Pin 06 | Pin 07 |

4. Operate the horn switch and monitor the meter reading.
   - Check the switch at all four corners of the horn push pad

GETtheMANUALS.org

Does the resistance switch between open circuit and less than 10 ohms when the horn switch is operated?

**Yes**

CHECK for DTCs indicating an instrument cluster, front electronic module or SCP network fault.

**No**

GO to C5.

**C5: CHECK THE HORN SWITCH OPERATION BEFORE THE CLOCKSPRING**

1. Remove the driver airbag assembly.
2. Disconnect the horn switch connector, SQ5.
3. Connect an ohmmeter between:

| SQ5, component side | SQ5, component side |
|---|---|
| Pin 01 | Pin 02 |

4. Operate the horn switch and monitor the meter reading.
   - Check the switch at all four corners of the horn push pad

Does the resistance switch between open circuit and less than 10 ohms when the horn switch is operated?

**Yes**

GO to C6.

**No**

INSTALL a new horn switch.
REFER to: Horn Switch (413-06 Horn, Removal and Installation).
Test for normal operation.

**C6: CHECK THE HARNESS BETWEEN THE HORN SWITCH AND THE CLOCKSPRING FOR SHORT CIRCUIT TO GROUND**

1. Remove the steering wheel.
2. Disconnect the clockspring connector, SQ2.
3. Measure the resistance between:

| SQ5, harness side | Battery |
|---|---|
| Pin 02 | Negative terminal |
| Pin 01 | |

Are the resistances greater than 100 Kohms?

**Yes**

GO to C7.

**No**

REPAIR the short circuit. For additional information, refer to the electrical guides. Test for normal operation.

**C7: CHECK THE CLOCKSPRING FOR SHORT CIRCUIT TO GROUND**

1. Measure the resistance between:

| SQ2, component side | Battery |
|---|---|
| Pin 04 | Negative terminal |
| Pin 05 | |

Are the resistances greater than 100 Kohms?

**Yes**

CHECK for DTCs indicating an instrument cluster, front electronic module or SCP network fault.

**No**

INSTALL a new clockspring.
REFER to: Clockspring (501-20B Supplemental Restraint System, Removal and Installation).
Test for normal operation.

GETtheMANUALS.org

# Horn - Horn

Removal and Installation

## Removal

1. Remove the front bumper cover.
   For additional information, refer to Section 501-19 Bumpers.
2. Disconnect the electrical connector.

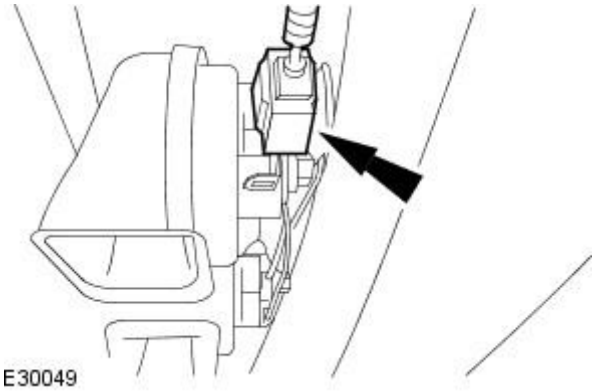


3. Remove the horn.

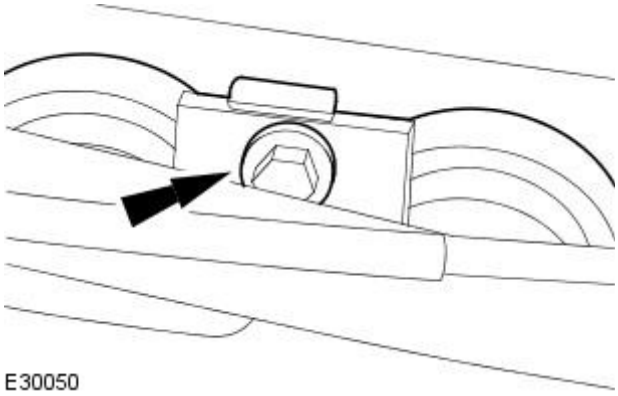


## Installation

1. To install, reverse the removal procedure.

GETtheMANUALS.org

# Horn - Horn Switch

Removal and Installation

## Removal

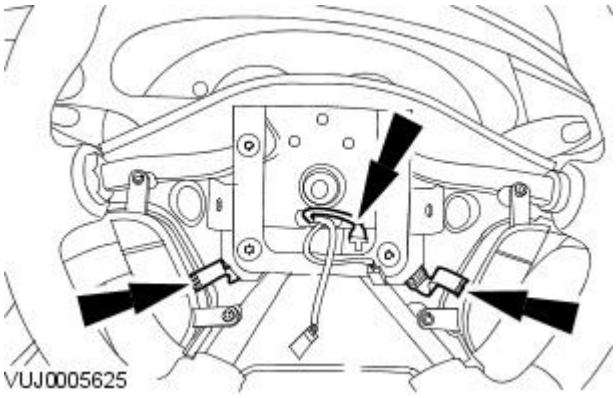


1. Remove the driver air bag module. For additional information, refer to Section 501-20A Safety Belt System / 501-20B Supplemental Restraint System.
2. Disconnect the electrical connectors.

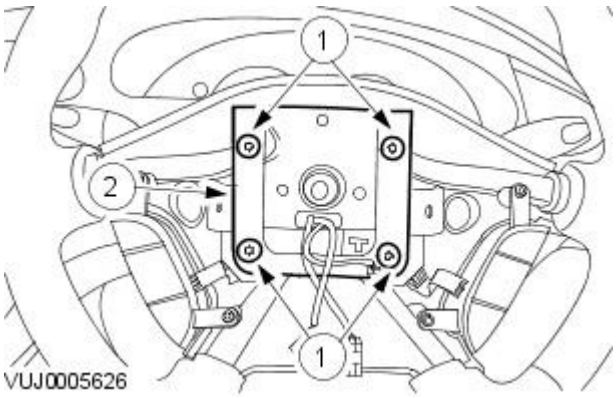


3. Remove the horn switch.
   1. Remove the horn switch retaining bolts.
   2. Remove the horn switch.

## Installation

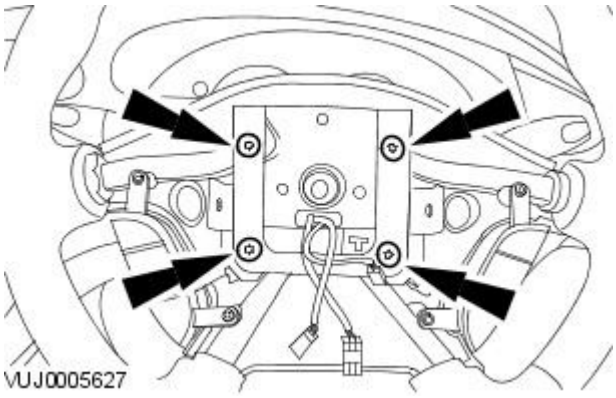


1. To install, reverse the removal procedure.
   - Tighten to 5 Nm.

GETtheMANUALS.org

# Information and Message Center - Information and Message Center

Description and Operation

## Vehicles built up to 01/2004

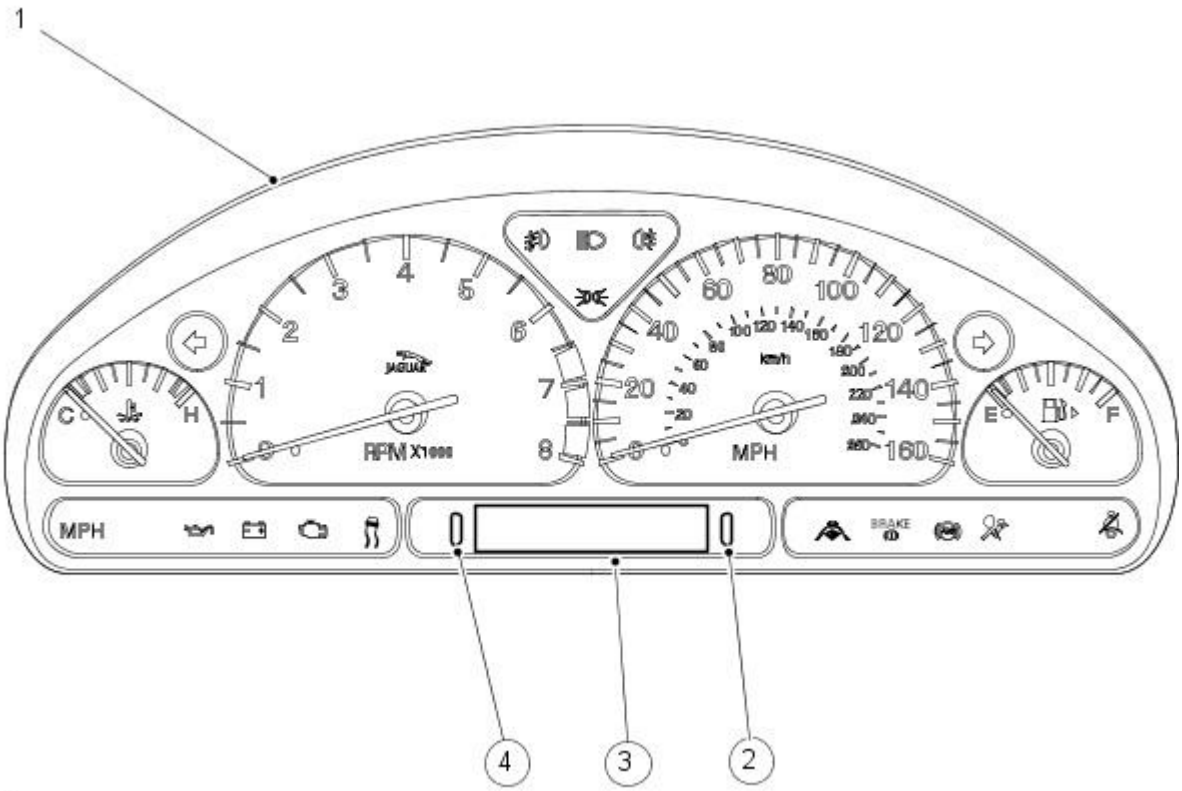


E30509

| Item | Part Number | Description |
|---|---|---|
| 1 | — | Instrument Cluster |
| 2 | — | Red Warning Lamp |
| 3 | — | Driver's Information/Message Center |
| 4 | — | Amber Warning Lamp |

The driver's information and message center has a liquid crystal (LCD) display and is located at the lower area of the instrument cluster.

The message center displays messages in text form for the driver, including odometer readings and trip computer data. It can also provide information normally covered by conventional warning lamps or indicate that a feature such as the cruise control is operating.

Located either side of the message center are two lamps, red for warning and amber for caution. When a message is displayed, the appropriate lamp will illuminate to attract the driver's attention and to signify the importance of the message.

## Vehicles built 02/2004 onwards

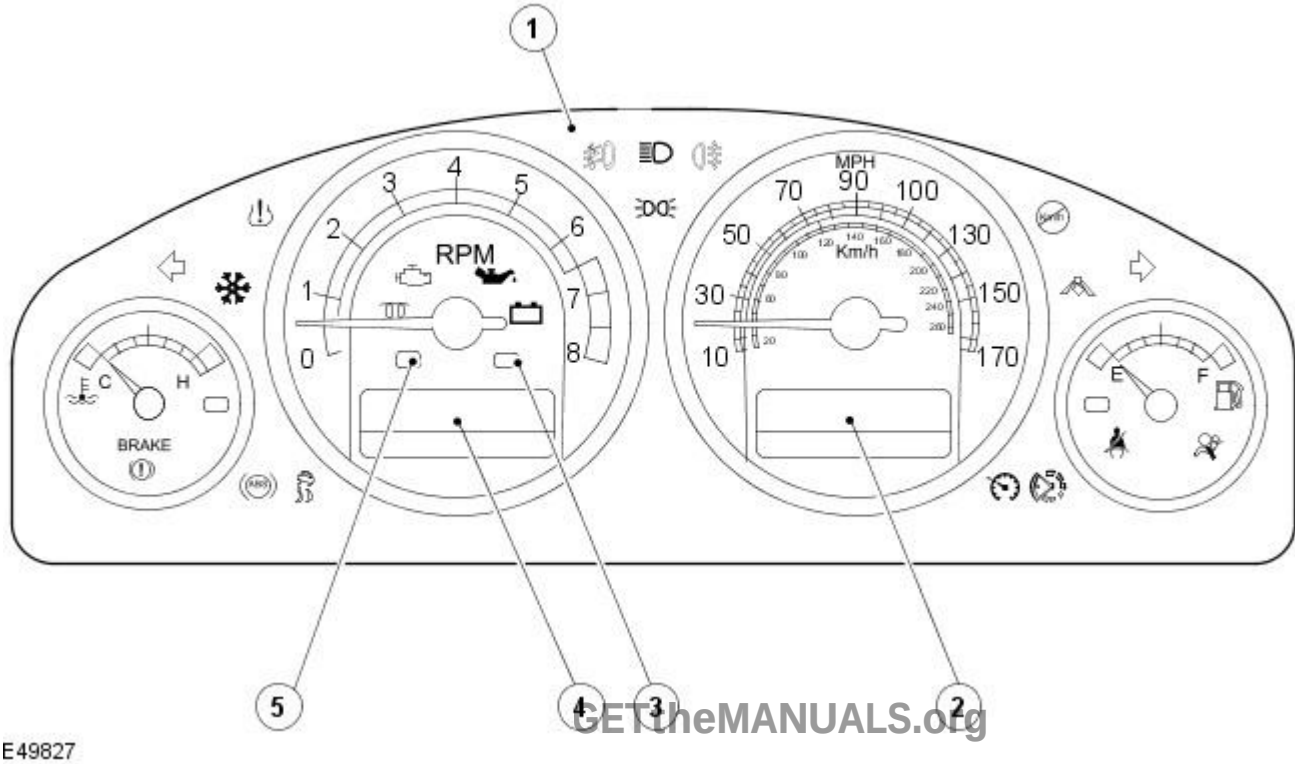


GETtheMANUALS.org

E49827

| Item | Part Number | Description |
|---|---|---|
| 1 | — | Instrument Cluster |
| 2 | — | Driver's Information/Message Center |
| 3 | — | Red Warning Lamp |
| 4 | — | Driver's Information/Message Center |
| 5 | — | Amber Warning Lamp |

The instrument cluster has two driver's information and message centers, which are liquid crystal (LCD) display. Both information and message centers are located in the lower area of the tachometer and speedometer.

The message centers display messages in text form for the driver, including odometer readings, trip computer data, clock and cruise control. They can also provide information normally covered by conventional warning lamps or indicate that a feature such as the cruise control is operating.

Located above the left hand side message center are two lamps, red for warning and amber for caution. When a message is displayed, the appropriate lamp will illuminate to attract the driver's attention and to signify the importance of the message.

## Trip Computer

Pressing the trip computer cycle switch displays trip data on the left hand side message center. Warning and information messages have priority over trip data. If a driver information message is displayed prior to activation of the trip computer, the trip data will appear for 10 seconds only, before being replaced by the original message.

Each successive press of the trip switch causes the computer to continually cycle through the stored data which is then displayed on the message center.

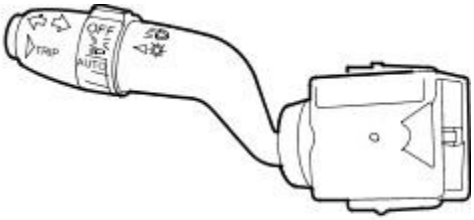


E30184

The trip computer switch pack, mounted on the instrument panel is only enabled while the trip computer output is displayed. Refer to the Drivers Handbook for full operating instructions.

## Oil Change Reminder Indicator - Vehicles with Diesel Particulate Filter (DPF)

The service required reminder indicator informs the driver that the engine requires an engine oil change due to excessive build-up of fuel within the engine oil. This is due to the diesel particulate filter (DPF) regeneration process where additional fuel quantities are added to increase exhaust gas temperatures. As a result small quantities of unburnt fuel remain in the combustion chamber and bypass the piston rings into the engine oil.

The amount of excessive fuel is calculated by the powertrain control module (ECM). The ECM monitors the engine operating conditions and the values from the exhaust gas temperature sensor during the DPF regeneration process and calculates the amount of fuel in the oil. If the fuel content exceeds the permitted level, the ECM will illuminate the service required reminder indicator in the instrument cluster.

After the engine oil has been changed, a service indicator reset procedure must be carried out.
For additional information, refer to: Oil Change Indicator Reset (413-09 Warning Devices, General Procedures).

GETtheMANUALS.org

# Information and Message Center - Information and Message Center

Diagnosis and Testing

1. **1.** Verify the customer concern.
2. **2.** Visually inspect for obvious signs of electrical damage.

**Visual Inspection Chart**

| Mechanical | Electrical |
|---|---|
| • Fluid level(s)<br>• Accessory installations | • Bulbs(s)<br>• Fuse(s)<br>• Wiring harness<br>• Electrical connector(s)<br>• Engine compartment components<br>• Underbody components<br>• Instrument cluster |

3. **3.** If an obvious cause for an observed or reported concern is found, correct the cause (if possible) before proceeding to the next step.
4. **4.** If the cause is not visually evident, verify the symptom and refer to the Jaguar Approved Diagnostic System.

GETtheMANUALS.org

# Information and Message Center - Message Center Switch

Removal and Installation

## Removal

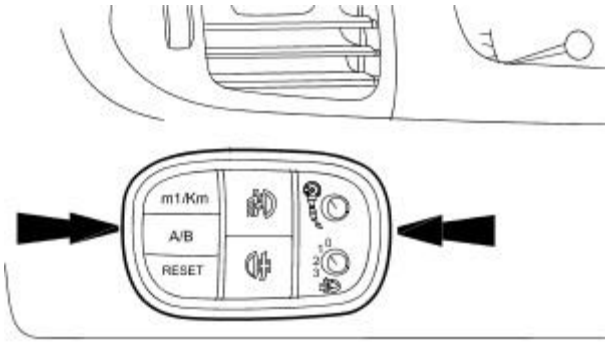


E30510

1. Detach the message centre switch.

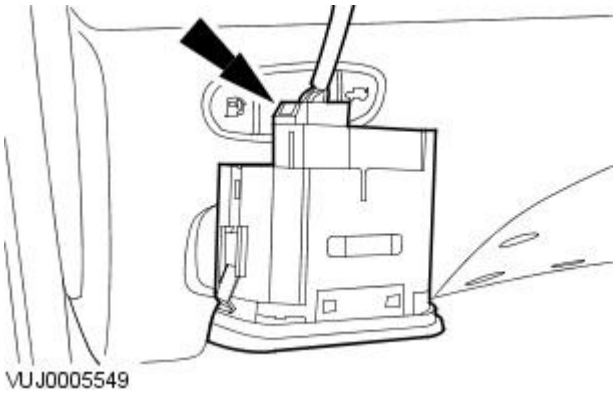

VUJ0005549

2. Remove the message centre switch.
   - Disconnect the electrical connector.

## Installation

1. To install, reverse the removal procedure.

GETtheMANUALS.org

# Warning Devices - Warning Devices

Description and Operation

## Driver Audible Warning

The audible warning system provides the driver with an audible warning when the key is in the ignition lock cylinder, a door is open, headlamps are on or the safety belt is not engaged. The driver will also be provided with a visual warning message displayed in the message center when the ignition lock cylinder is in the **ON** position. The system uses a number of inputs to provide the driver with audible and visual warnings.

## Instrument Cluster

• CAUTIONS:

If a red warning light is displayed in the instrument cluster the vehicle must be stopped as soon as possible, but only when it is safe to do so. A red warning light indicates a primary warning. Primary warnings must be reported to a Jaguar Dealer and investigated immediately. Failure to follow these instructions may result in damage to the vehicle.

If an amber warning light is displayed in the instrument cluster the driver must take the appropriate action, but only when it is safe to do so. An amber warning light indicates a secondary warning. Secondary warnings must be reported to a Jaguar Dealer and investigated at the drivers earliest opportunity. Failure to follow these instructions may result in damage to the vehicle.

The instrument cluster acts as a system monitor for the audible and visual warnings. It receives inputs from switches and sensors directly or through the multiplex link from another module and triggers the necessary audible or visual warnings.

## Message Center

• CAUTIONS:

If a red warning light is displayed in the instrument cluster the vehicle must be stopped as soon as possible, but only when it is safe to do so. A red warning light indicates a primary warning. Primary warnings must be reported to a Jaguar Dealer and investigated immediately. Failure to follow these instructions may result in damage to the vehicle.

If an amber warning light is displayed in the instrument cluster the driver must take the appropriate action, but only when it is safe to do so. An amber warning light indicates a secondary warning. Secondary warnings must be reported to a Jaguar Dealer and investigated at the drivers earliest opportunity. Failure to follow these instructions may result in damage to the vehicle.

When warning messages are displayed they have an associated warning light, red or amber, located within the instrument cluster which will come on to indicate the message priority. If more than one message is active, each message will be displayed in turn for 2 seconds in order of priority.

## Ignition Lock Cylinder (North America Only)

An audible warning will sound continuously when the drivers door is open and the key is in the ignition lock cylinder, on removal of the key the audible warning will stop.

## Luggage Compartment Switch

The luggage compartment switch will activate a visual warning when the ignition lock cylinder is in the **ON** position and the luggage compartment is ajar.

## Door Ajar Switches

The door ajar switches will activate a visual warning when the ignition lock cylinder is in the **ON** position and any of the doors are ajar.

## Headlamp Switch

An audible warning will sound continuously when the driver door is ajar and the vehicle lamps are on. The audible warning is provided whether the key is in or out of the ignition lock cylinder and will cease after five minutes or when the lamps are switched off or when the door is closed.

## Direction Indicators

An audible warning and a flashing green arrow on the instrument cluster indicates that the selected direction indicator is on. If a direction indicator lamp should fail, the audible warning will sound at twice the normal speed and the corresponding flashing green arrow will flash at twice the normal speed.

## Hazard Warning

An audible warning and both flashing green arrows on the instrument cluster indicates that the hazard warning lights are on, also the hazard warning light switch symbol will be illuminated and flashing.

## Safety Belt Reminder

The safety belt reminder switch is an integral part of the front safety belt buckle. An audible warning will sound continuously for approximately six seconds (North America only) when the driver turns the ignition lock cylinder to the **ON** position and the safety belt is not engaged, a warning lamp will also be illuminated and show continuously (the warning lamp will illuminate for one minute only in North America). The audible warning and warning lamp will cease if the safety belt is engaged. (If only the driver is present the safety belt warning will relate only to the driver. If both front seats are occupied the safety belt reminder will relate to both front seats). The passenger seat weight sensor is used to determine if the passenger seat is occupied.

GETtheMANUALS.org

## Beltminder

European Beltminder

The beltminder function is an additional warning to the safety belt reminder. Under the conditions where a front seat occupant is unbelted or becomes unbelted and the vehicle is moving above 16 km/h (10 mile/h) then an additional audible warning of an intermittent tone will start accompanied by the safety belt warning lamp flashing. The intermittent audible warning and flashing lamp will last for 10 seconds and will repeat every 30 seconds for five minutes. The additional warnings will stop when all occupants seated in the front of the vehicle have their safety belts fastened or if the vehicle speed drops below 5 km/h (3 mile/h).

North American Beltminder

The system will function the same as for European beltminder after 75 seconds.

Beltminder Disabling

This process is common to both European and North American beltminder.

1. **1.** Make sure the front passenger seat is unoccupied.

• NOTE: Steps two to five must be completed within 60 seconds.

2. **2.** Turn the ignition lock cylinder to the **ON** position (do not start the engine).
3. **3.** Buckle the driver safety belt buckle and wait until the safety belt warning lamp extinguishes.
4. **4.** Unbuckle the driver safety belt buckle and wait until the safety belt warning lamp illuminates.
5. **5.** Repeat Steps three and four a further eight times.
6. **6.** When the driver safety belt buckle is unbuckled for the ninth time a single audible warning will sound. The single audible warning is acknowledgment that the beltminder feature has been disabled.

The beltminder feature will be disabled until the above process (steps one to six) are repeated. Upon repeating the process the beltminder feature will be reactivated.

## Air Bag Inactive Warning

If a fault is present in the supplementary restraints system and the warning lamp in the instrument cluster is inoperative, then the restraints control module will send a signal to the instrument cluster to activate an audible warning. The audible warning will not sound for the first 90 seconds when the ignition lock cylinder is in the **ON** position . The audible warning will then sound continuously for 5 seconds and stay silent for 5 seconds, this sequence repeats 5 times and the function will repeat every 30 minutes until the fault has been rectified.

## Parking Brake Warning

Operation of the parking brake when the vehicle is in motion will cause the message 'PARKBRAKE ON' to be displayed in the message center, the warning lamp in the instrument cluster will be displayed and an audible warning will sound.

## Parking Aid

CAUTION: It is the drivers responsibility to check for any obstacles and judge the vehicles distance from them. Overhanging objects, barriers, thin obstructions or painted surfaces may not be detected by the vehicles parking aid. Failure to follow this instruction may result in damage to the vehicle.

• NOTE: Front parking aid will also operate when reverse gear is selected.

Parking aid provides an audible proximity warning when parking. If an obstacle is detected at the front or rear of the vehicle, an audible warning will sound from the front or rear speakers respectively, the audible warning will increase in speed as the vehicle approaches the obstacle. The front and rear parking aid audible warning will become continuous when an object is detected at or within 300 mm (12 inch) from the rear of the vehicle or approximately 250 mm (10 inch) from the front of the vehicle. If the parking aid has a fault when engaging reverse gear or switching the ignition lock cylinder to the **ON** position, a single 3 second audible warning will sound. Parking aid will be automatically disabled as soon as a fault is detected.

## Adaptive Cruise Control (ACC)

WARNING: It is the drivers responsibility to slow the vehicle down when the 'DRIVER INTERVENE' message is displayed in the message center. Failure to follow this instruction may result in personal injury.

CAUTION: It is the drivers responsibility to slow the vehicle down when the 'DRIVER INTERVENE' message is displayed in the message center. Failure to follow this instruction may result in damage to the vehicle.

If adaptive cruise control (ACC) is active, an amber warning light is illuminated to indicate that the vehicle is in 'FOLLOW MODE' and is automatically maintaining the set distance from the vehicle immediately ahead. Maximum braking which is applied to the ACC system is limited and can be overridden by the driver applying the brakes. If the ACC system predicts that it's maximum braking level will not be sufficient, an audible warning will sound and the message 'DRIVER INTERVENE' will be displayed in the message center. If the vehicle speed decreases below 30 km/h (18 mile/h), the ACC system will be automatically switched off and the instrument warning light will go out. If the brakes have been applied by the ACC system, they will be slowly released, this will be accompanied by an audible warning, the message 'DRIVER INTERVENE' will again be displayed in the message center.

## Adaptive Cruise Control (ACC) Failure

WARNING: It is the drivers responsibility to slow the vehicle down when the 'DRIVER INTERVENE' message is displayed in the message center. Failure to follow this instruction may result in personal injury.

CAUTION: It is the drivers responsibility to slow the vehicle down when the 'DRIVER INTERVENE' message is displayed in the message center. Failure to follow this instruction may result in damage to the vehicle.

GETtheMANUALS.org

If a fault occurs during the operation of the ACC system in 'CRUISE' or 'FOLLOW' modes, the ACC system will switch off and cannot be used until the fault is cleared. The message 'DRIVER INTERVENE' will be displayed briefly in the message center followed by the message

'CRUISE NOT AVAILABLE'. If failure of the ACC or any related system occurs at any other time the message 'CRUISE NOT AVAILABLE' will be displayed and it will not be possible to active the ACC system. Accumulated debris, dirt, snow or ice on the ACC sensor or it's cover may inhibit the ACC operation. Fitting of a vehicle front protector or metallized badges may also affect ACC operation. If this occurs and audible warning will sound and the message 'DRIVER INTERVENE' will be briefly displayed in the message center followed by the message 'ACC SENSOR BLOCKED'. This will render the ACC system inactive.

GETtheMANUALS.org

# Warning Devices - Warning Devices

Diagnosis and Testing

## Inspection and Verification

1. **1.** Verify the customer concern.
2. **2.** Visually inspect for obvious signs of mechanical or electrical damage.

**Visual Inspection Chart**

| Mechanical | Electrical |
|---|---|
| • Door ajar switch(es)<br>• Safety belt buckle and pretensioner<br>• Headlamp switch<br>• Fuel gauge | • Fuse(s)<br>• Wiring harness<br>• Electrical connector(s)<br>• Switch(es)<br>• Sensor(s) |

3. **3.** If an obvious cause for an observed or reported concern is found, correct the cause (if possible) before proceeding to the next step.
4. **4.** If the cause is not visually evident, verify the symptom and refer to the Jaguar Approved Diagnostic System.

GETtheMANUALS.org

# Warning Devices - Oil Change Indicator Reset

General Procedures

**1.** NOTE: Steps 2 to 5 must be completed within 3 seconds for successful service mode resetting.

• NOTE: Ignition key in the **OFF** position.

Press and hold down the trip computer **CLEAR / RESET** button.

**2.** Continue to hold down the trip computer **CLEAR / RESET** button and turn the ignition switch to the **ON** position.

**3.** Release the trip computer **CLEAR / RESET** button.

**4.** Press and hold down the trip computer **TRIP** button located on the left-hand steering column multifunction switch.

**5.** Continue to hold down the trip computer **TRIP** button and press and hold down the trip computer **CLEAR / RESET** button.

**6.** Continue to hold down the trip computer **TRIP** and **CLEAR / RESET** buttons, **RESETTING SERVICE MODE** will display in the information and message center if steps 2 to 5 are completed successfully.

**7.** After 10 seconds the information and message center will then display **SERVICE MODE RESET** once the process is complete.

**8.** NOTE: If the information and message center does **NOT** display **SERVICE MODE RESET**, steps 1 to 8 must be repeated.

Release the trip computer **TRIP** and **CLEAR / RESET** buttons and turn the ignition switch to the **OFF** position.

GETtheMANUALS.org

# Parking Aid - Parking Aid

Description and Operation

## Vehicles built up to 01/2004

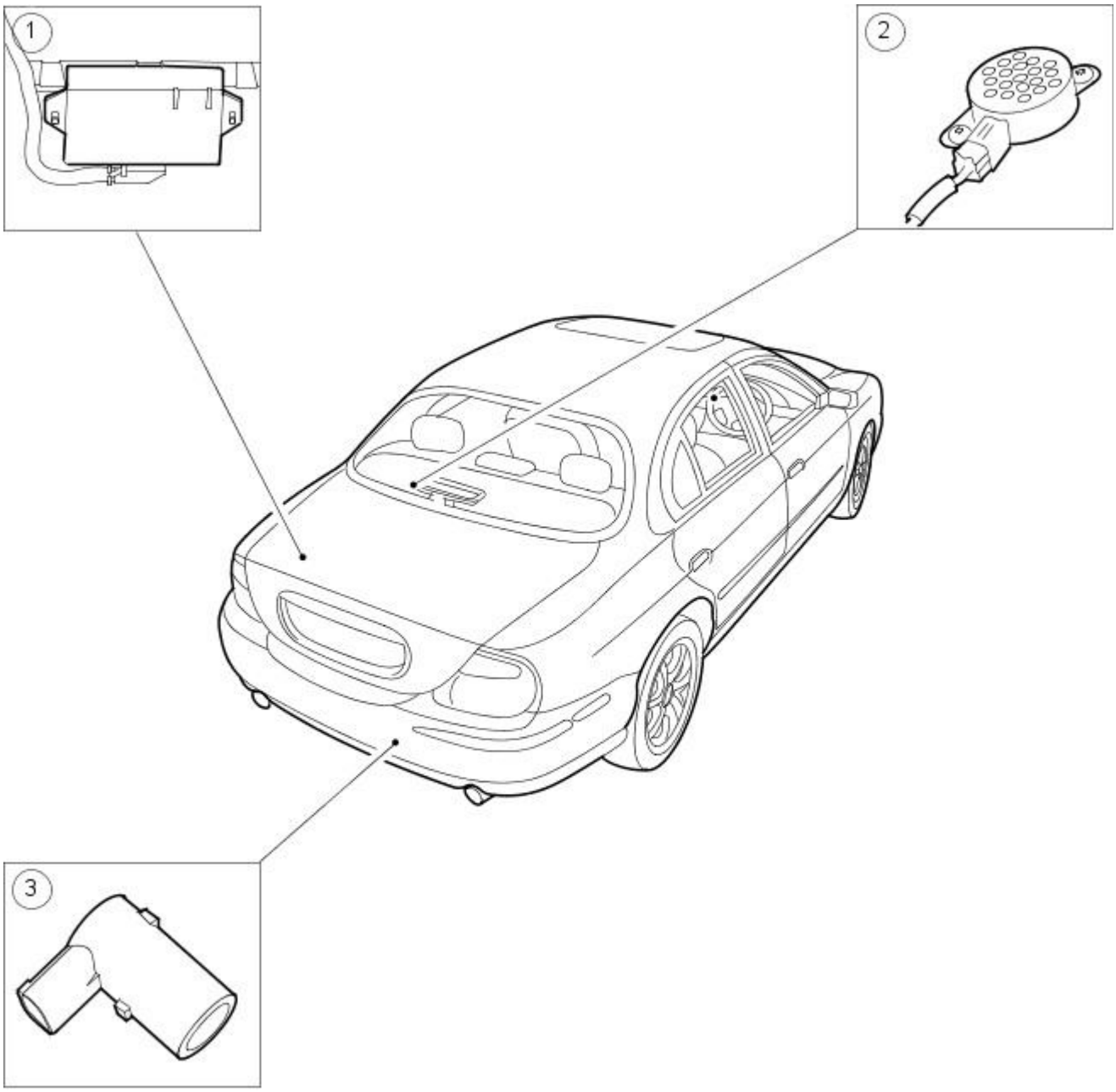


E30202

| Item | Part Number | Description |
|---|---|---|
| 1 | — | Parking aid module |
| 2 | — | Parking aid speaker |
| 3 | — | Parking aid sensors |

The function of the parking aid is to provide an audible warning to the driver of the distance to obstacles near the rear bumper of the vehicle when reversing. The system provides an assistance to the driver when reversing in order to help avoid collision with obstacles.

The sensor range at the rear of the vehicle should be 1.8 meters. This should extend the full width of the rear bumper and reduce to 50cm at the vehicle corners. The vertical range is adequate to protect the highest and lowest points of the rear of the vehicle. The system will detect curbs with heights of at least 18cm. Obstacles, such as curbs, that are low enough to pass under the vehicle until they make contact with the tires will not be detected.

The system activates a specific speaker with a tone signifying the distance to the obstacle. The tone consists of a beep and defined space ratio which varies depending on the calculated distance. When the distance to the obstacle is less than 20cm the speaker tone is continuous.

The reversing aid is continuously in operation, unless towing when the system automatically switches off. If the reverse aid develops a fault the tone will sound continuously for three seconds when the ignition is switched on or the reverse gear is selected.

## Vehicles built 02/2004 onwards

GETtheMANUALS.org

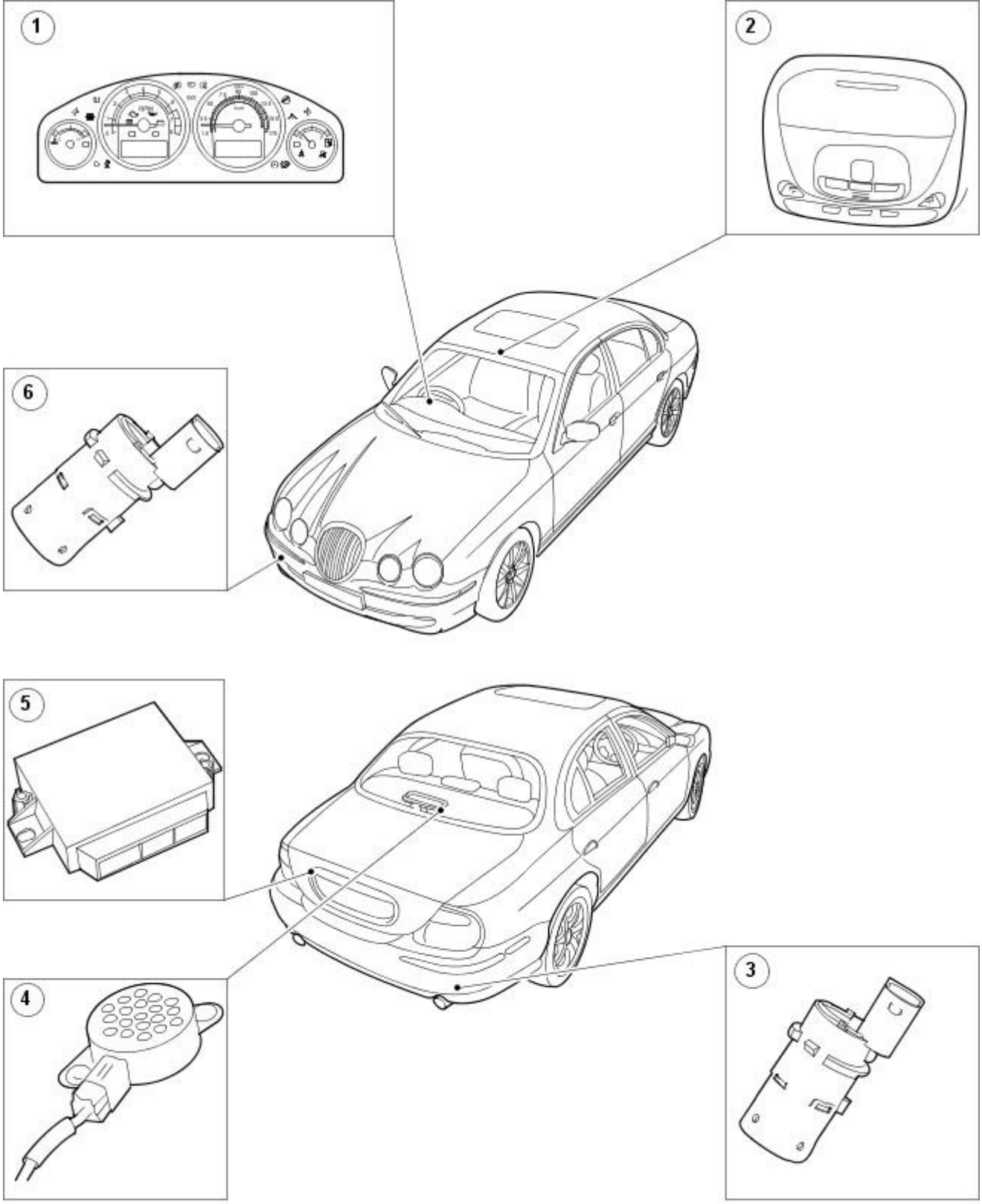


E49674

| Item | Part Number | Description |
|---|---|---|
| 1 | — | Instrument cluster |
| 2 | — | Overhead console |
| 3 | — | Rear parking aid sensors |
| 4 | - | Parking aid speaker |
| 5 | - | Parking aid module |
| 6 | - | Front parking aid sensors |

The function of the parking aid is to provide an audible warning to the driver of the distance to obstacles near the front and rear bumpers of the vehicle when parking. The system provides an assistance to the driver in order to help avoid collision with obstacles.

The sensor range at the front of the vehicle should be 0.8 meters. This should extend the full width of the front bumper and reduce to 60cm at the vehicle corners. The vertical range is adequate to protect the highest and lowest points of the front of the vehicle. The system will detect curbs with heights of at least 18cm. Obstacles, such as curbs, that are low enough to pass under the vehicle until they make contact with the tires will not be detected.

The sensor range at the rear of the vehicle should be 1.8 meters. This should extend the full width of the rear bumper and reduce to 60cm at the vehicle corners. The vertical range is adequate to protect the highest and lowest points of the rear of the vehicle. The system will detect curbs with heights of at least 18cm. Obstacles, such as curbs, that are low enough to pass under the vehicle until they make contact with the tires will not be detected.

GETtheMANUALS.org

The system activates a specific speaker at the front or the rear of the vehicle with a tone signifying the distance to the obstacle. The tone consists of a beep and defined space ratio which varies depending on the calculated distance. When the distance to the obstacle is less

than 20 cm (7.8 inches) the speaker tone is continuous.

The parking aid system comprises of:

- a module mounted in the spare wheel well just rearward of the spare tire.
- four rear bumper mounted sensors.
- four front bumper mounted sensors.
- two audible speakers, the rear mounted on the rear parcel shelf and the front incorporated in the instrument cluster.
- a cancellation switch that is mounted into the roof console. This is fitted for the driver to disable the system when in slow moving traffic. This stops the front parking aid continuously monitoring the vehicle in front.

The overhead console switch contains a Light Emitting Diode (LED) to inform the driver of the system status:

- LED **ON** - System Active
- LED **OFF** - System Inactive
- LED **FLASHING** - System Fault

The reverse parking aid is active when reverse gear is selected, unless towing (with a Jaguar approved towbar) when the system automatically switches off. If the parking aid system develops a fault the tone will sound continuously for three seconds when the ignition is switched on or when the reverse gear is selected, and the overhead console switch LED will flash.

The front parking aid remains inactive after the ignition is switched to the **ON** position until the overhead console switch is pressed or reverse gear is selected. The system will then remain active up to 15 kph (9.5 mph) in a forward gear, or until the overhead console switch is pressed. The front parking aid system becomes inactive if the overhead console switch is pressed while the system is active, or at all forward speeds above 15 kph (9.5 mph).

GETtheMANUALS.org

# Parking Aid - Parking Aid

Diagnosis and Testing

## Inspection and Verification

1. **1.** Verify the customer concern.
2. **2.** Visually inspect for obvious signs of electrical damage.

**Visual Inspection Chart**

| Electrical |
| --- |
| • Fuse(s)<br>• Relay(s)<br>• Wiring Harness<br>• Electrical connector(s)<br>• Parking aid sensor(s)<br>• Parking aid speaker<br>• Reversing lamp switch<br>• Parking aid module |

3. **3.** If an obvious cause for an observed or reported concern is found, correct the cause (if possible) before proceeding to the next step.
4. **4.** If the cause is not visually evident, verify the symptom and refer to the Jaguar Approved Diagnostic System.

GETtheMANUALS.org

# Parking Aid - Front Parking Aid SensorVehicles Built From: 02/2004

Removal and Installation

## Removal

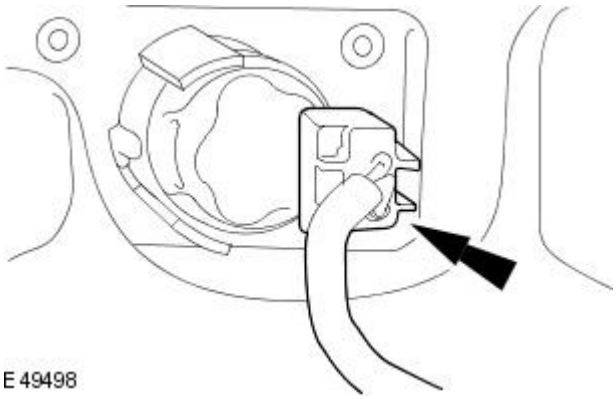


1. Remove the front bumper cover.
   For additional information, refer to: Front Bumper Cover (501-19 Bumpers, Removal and Installation).
2. Disconnect the electrical connector.

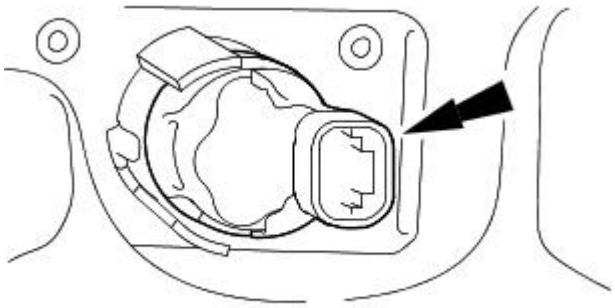


3. CAUTION: Make sure excessive pressure or tools are not used when removing the front parking aid sensor from the housing.

   Remove the front parking aid sensor.

## Installation

1. To install, reverse the removal procedure.

GETtheMANUALS.org

# Parking Aid - Parking Aid Module

Removal and Installation

## Removal

All vehicles

**1.** Remove the spare wheel.

Vehicles built up to 01/2004

**2.** Disconnect the electrical connector.

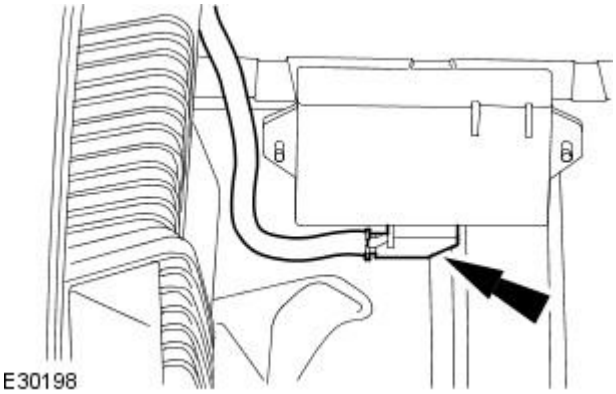


Vehicles built 02/2004 onwards

**3.** Detach the harness.

1. Disconnect the electrical connectors.
2. Detach the harness.

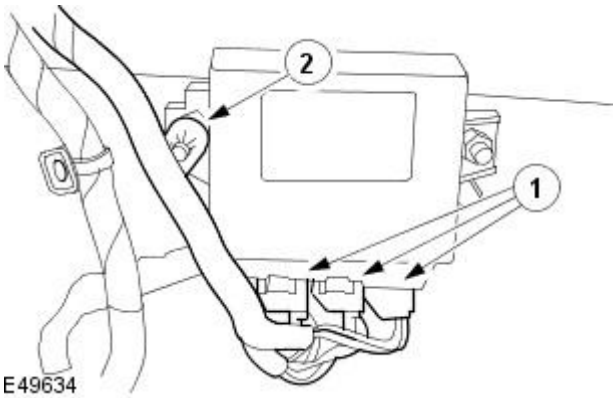


All vehicles

**4.** Remove the parking aid module.

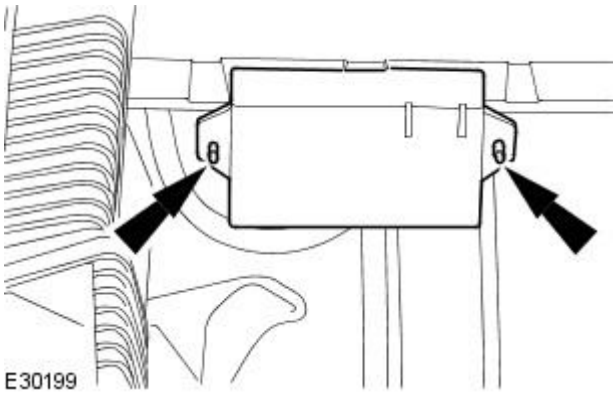


## Installation

**1.** To install, reverse the removal procedure.

GETtheMANUALS.org

# Parking Aid - Parking Aid Speaker

Removal and Installation

## Removal

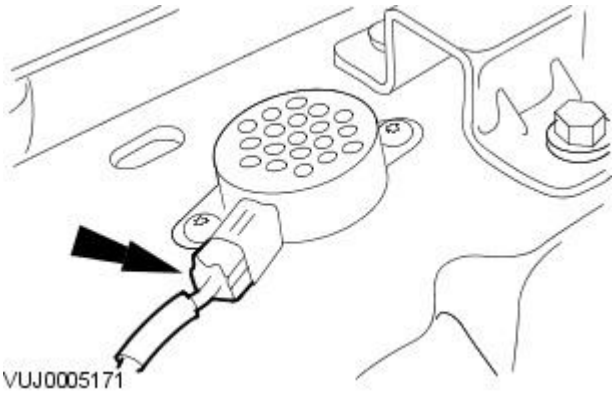


1. Remove the parcel shelf.
   For additional information, refer to Section 501-05 Interior Trim and Ornamentation.
2. Disconnect the electrical connector.

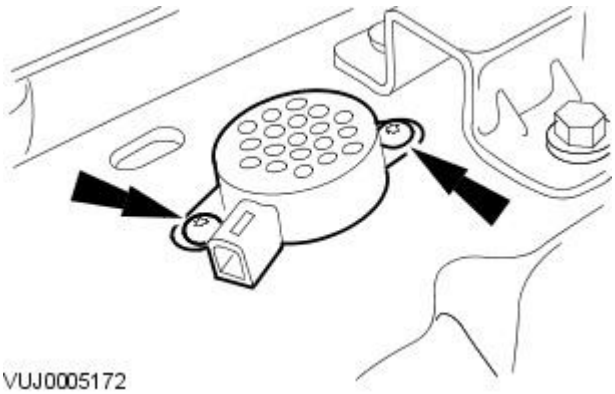


3. Remove the parking aid speaker.

## Installation

1. To install, reverse the removal procedure.

GETtheMANUALS.org

# Parking Aid - Rear Parking Aid SensorVehicles Built From: 02/2004

Removal and Installation

## Removal

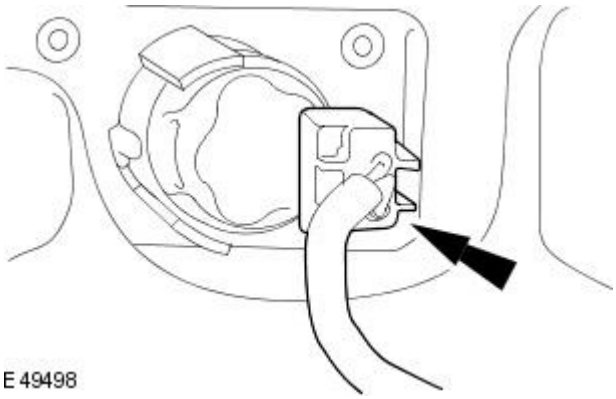


1. Remove the rear bumper cover.
   For additional information, refer to: Rear Bumper Cover (501-19 Bumpers, Removal and Installation).
2. Disconnect the electrical connector.

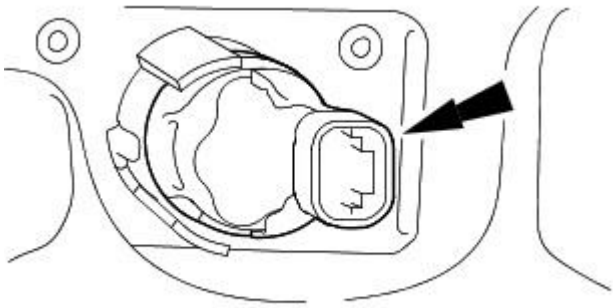


3. CAUTION: Make sure excessive pressure or tools are not used when removing the rear parking aid sensor from the housing.

   Remove the rear parking aid sensor.

## Installation

1. To install, reverse the removal procedure.

GETtheMANUALS.org

# Parking Aid - Rear Parking Aid SensorVehicles Built Up To: 01/2004

Removal and Installation

## Removal

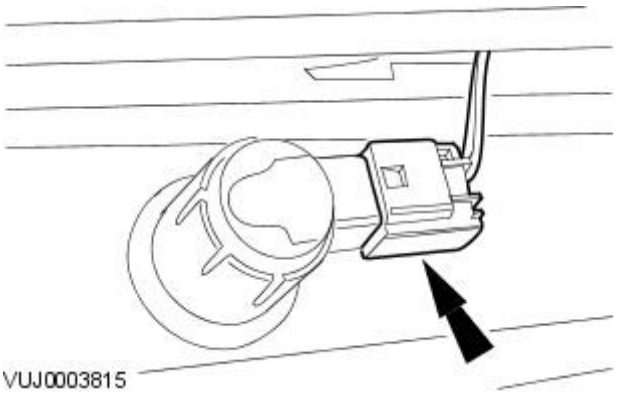


1. Remove the rear bumper cover.
   For additional information, refer to Section 501-19 Bumpers.
2. Disconnect the electrical connector.

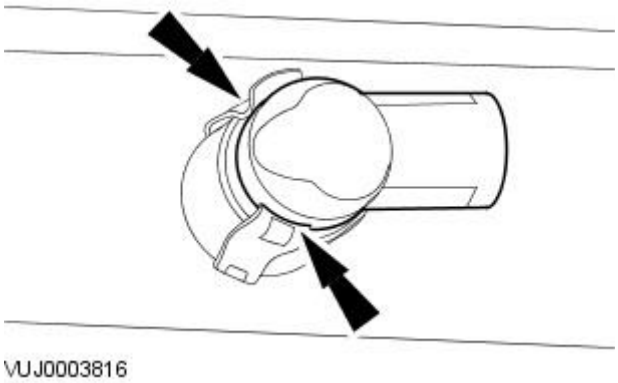


3. CAUTION: Make sure excessive pressure or tools are not used when removing the parking aid sensor from the housing.

   Remove the parking aid sensor.

## Installation

1. To install, reverse the removal procedure.

GETtheMANUALS.org

# Battery and Charging System - General Information - Charging System

Description and Operation

The charging system for vehicles fitted with 2.5L or 3.0L engines consist of a 120 amp output, L3B, generator and regulator assembly. Vehicles fitted with 2.7L Diesel engines consist of a 150 amp output, SC2, generator and regulator assembly. Vehicles fitted with 4.2L engines consist of a 130 amp output, SC1, generator and regulator assembly. The generator and regulator assembly generates electrical power to the vehicle electrical system with electricity when the engine is running and maintain the battery in a charged state.

The generator is belt driven by the accessory drive belt.
For additional information, refer to: Accessory Drive (303-05 Accessory Drive, Description and Operation).
When the engine is started, the generator begins to generate alternating current (AC) which is converted to direct current (DC) internally. The DC current and voltage is controlled by the voltage regulator, (located inside the generator ) and then supplied to the battery through the main battery positive cable.

The 2.5L/3.0L and 2.7L Diesel generators are solidly mounted to the engine, while the 4.2L generator is pivot mounted. The generators are driven at approximately three times engine speed.

Vehicles fitted with 2.5L or 3.0L engine (L3B generator)

Vehicles fitted with manual transmission have a one way clutch fitted to the drive pulley, which reduces belt slip.

The Engine control module (ECM) can switch the voltage regulator between two voltages to optimize the charging of the battery.

The low voltage regulator setting is 13.6 volts and the high voltage regulator setting 15.3 volts, measured with the generator at 25 degrees centigrade (77 degrees fahrenheit) and charging at a rate of 5 amps. These values decrease with a rise in temperature or current flow.

The ECM determines the output voltage setting of the generator. The high voltage setting is always selected by the ECM once the vehicle has started. The ECM determines the period of time that the high voltage setting is selected for.

There are three different time periods selected by the ECM which is dependent upon the vehicle conditions when the vehicle is started:

- The longest period of time is selected if the ECM determines that the vehicle has been 'soaking' for sufficient time to allow the engine coolant temperature (ECT) and the air intake temperature (IAT) to fall within 6 degrees centigrade (43 degrees Fahrenheit) of each other.
- The intermediate time period is selected when the ECT and the IAT is below 15 degrees centigrade (59 degrees Fahrenheit).
- The shortest time period is the default time and is used to provide a short period of boost charge.

At the end of these time periods the voltage is always set to the low voltage setting to prevent the battery from being over charged.

The time periods are variable depending upon the temperature and battery voltage. The target voltage of the battery varies between 14 volts and 15 volts depending upon the ambient temperature and the vehicle operating conditions. Once this target voltage has been achieved, providing the vehicle has been operating for at least the shortest time period, the ECM will reduce the voltage regulator to the minimum setting of 13.6 volts.

Vehicles fitted with 2.7L Diesel engine (SC2 generator)

All vehicles use a PCM (Pulse Control Modulated) generator. This allows the output voltage to be controlled between 12.5 & 16V via a signal from the ECM.

This voltage is controlled between 13.5V & 15.5V. The system voltage is tailored more closely to the demands of the battery. At low ambient temperatures (as measured by the air conditioning ambient air sensor), the charging voltage is higher to improve charge acceptance. At high ambient temperatures the voltage is lower to reduce electrolyte loss and unnecessary battery self-heating. Also built into the strategy, is the ability to measure the battery voltage at Ignition On. A battery with low voltage at Ignition On is boost charged at a higher voltage for a calculated time before returning to its 'Base Characteristic' (defined by the prevailing ambient temperatures). The time and boost voltage depends upon the temperature and battery voltage at Ignition On.

All vehicles have a one way clutch fitted to the drive pulley, which reduces belt slip.

Vehicles fitted with 4.2L engine (SC1 generator)

The battery charging voltage is determined by the temperature of the generator. In cold conditions, starting the vehicle from cold the battery voltage will be between 14.2 volts and 15.1 volts and will reduce as the engine warms up. In hot conditions starting the vehicle when the engine is already warm the battery voltage will be between 13.5 volts and 14.3 volts.

A fault in the wiring or the connections from the generator to the ECM, will cause a fault code to be generated and stored in the ECM and the charge warning indicator lamp to be displayed in the instrument cluster after a short time.

With the ignition switch in the RUN position the charge warning lamp will be displayed in the instrument cluster when the generator is not generating power.

If a fault is detected with the generator a fault code will be generated and stored by the ECM. The charge warning indicator lamp will also be displayed in the IC. Units should be repaired as an assembly and not dismantled for repair.
For additional information, refer to: Generator (414-02 Generator and Regulator, Description and Operation).

GETtheMANUALS.org

# Battery and Charging System - General Information - Battery Care

Description and Operation

## 12V LEAD ACID BATTERY CARE MANUAL FOR DEALER / RETAILER USE

**1. INTRODUCTION**

**2. GENERAL RULES FOR BATTERY CARE**

**3. EQUIPMENT (MINIMUM STANDARD)**

**4. HEALTH AND SAFETY PRECAUTIONS**

**5. DETERMINING BATTERY CONDITION**

**6. BATTERY CHARGING AND MAINTENANCE**

**7. CHARGING SYSTEM TEST AND DIAGNOSIS**

**8. VEHICLE QUIESCENT CURRENT TESTING**

**APPENDIX A: BATTERY TEST PROCESS**

**APPENDIX B: BATTERY REPORT FORM - IN SERVICE BATTERIES ONLY**

## 1. INTRODUCTION

This publication sets out, for the benefit of dealers / retailers worldwide, requirements for the care and maintenance of batteries, from the vehicles hand-over to the dealer / retailer to the handover to the customer or in the case of a spare part battery from is delivery to the dealer / retailer to its fitment to a customer vehicle.

It applies to all types of 12 volt Lead Acid Batteries used, whether they are conventional flooded technology or Absorbed Glass Mat (AGM) technology and also applies to both Primary and Secondary or Auxiliary Batteries.

The clearly laid out and illustrated sections guide dealers / retailers through each stage of the vehicles or spare parts receipt, storage, pre-delivery and customer hand-over. This publication can be used as a guide to the handling and care of batteries in service. It is vital to appreciate that unless each process is rigorously applied on all vehicles, the customer will receive a vehicle with a battery or a spare part battery which will not provide a satisfactory service life.

It is very important that all tests quoted throughout this publication are adhered to. If they are applied incorrectly batteries could be scrapped unnecessarily. Refer to the battery testing section for detailed information.

It is equally important therefore to note the following key points:

- Most new vehicles leave the factory with either a transit relay installed and/or have a transit mode programmed into the vehicle control modules. The transit relay must be removed and the transit mode disabled (where applicable) using an approved diagnostic system, **NOT MORE THAN 24 HOURS** before the customer takes delivery.
- 12 Volt Lead Acid Batteries rely on internal chemical processes to create a voltage and deliver current. These processes and the internal chemical structure of the battery can be damaged if the battery is allowed to discharge over a number of weeks / months, or is left in a discharged state for a lengthy time period. For this reason the battery must be tested / re-charged if necessary every month, and **MUST BE** re-charged after every three month period of storage. Refer to the vehicle storage manual and update the vehicle history sheet.
- Under no circumstances should the battery be disconnected with the engine running because under these conditions the alternator can give a very high output voltage. This high transient voltage will damage the electronic components in the vehicle. Loose or incomplete battery connections may also cause high transient voltage.
- On vehicles with conventional ignition keys, these must not be left in the ignition lock barrel when the transit relay has been removed, otherwise quiescent current will increase and the battery will discharge more rapidly.
- Two types of Lead acid batteries are used; standard Flooded type and AGM (Absorbed Glass Mat) or VRLA (Valve regulated Lead Acid) types. AGM batteries offer improved resistance to cycling as seen in stop start applications. AGM Batteries are fully sealed and cannot have the electrolyte level topped up.

**Dealers and retailers involved in the storage, handling of vehicles and spare parts batteries have a responsibility to ensure that only vehicles and spare parts having a fully satisfactory battery may be processed further through the distribution selling chain.**

• NOTE: It is very important that test processes quoted throughout this publication are adhered to.

If they are not adhered to correctly batteries could be scrapped unnecessarily or a battery with an issue remains in use. Refer to the battery testing section for detailed information.

## 2. GENERAL RULES FOR BATTERY CARE

### Frequency of Battery Condition Checks.

Any battery in storage whether it is in a vehicle or in spare parts inventory must have its charge status checked every 30 days as described in Appendix A, and must be recharged every 90 days as described in the "Battery Charging and Maintenance" section of this manual.

### Dealer Demonstration Vehicles

Due to the high depth of discharge a dealer demonstration vehicle battery may experience, batteries that are fitted to vehicles used as dealer demonstration vehicles must be connected to a power supply / charger capable of delivering 50 Amps or more whilst the vehicle is being demonstrated and the engine is not running. This will prevent the battery from being damaged from "energy throughput " wear out during a demonstration.

### Software Reflash, SDD work or Ignition On related Workshop Activities.

GETtheMANUALS.org

Due to the high electrical current demand and high depth of Discharge that can occur during vehicle software re-flash activities, SDD work or ignition on related work in the workshop, vehicles that are undergoing such activities MUST have the electrical system on the vehicle

supported with a power supply / charger / vehicle maintainer capable of delivering 50 Amps or more.

### Jump Starting New vehicles Before They Have Been Delivered to the Customer.

- It is the dealer / retailers responsibility to ensure the battery is not allowed to go flat by following the instructions and processes defined in this manual.
- However if circumstances dictate that a new vehicle must be jump started due to a flat battery whilst the vehicle is in the dealer / retailers care, the battery on this vehicle must be replaced with a new one prior to delivery to the customer at the dealer / retailers liability.
- The vehicle should also undergo investigation as to why the battery went flat.
- Do not connect the jump starting cable to the negative (-) terminal of the battery. Always connect to the recommended earthing point. As defined in the owners handbook or service documentation for that vehicle.

### Jump Starting or Boost Charging Vehicles in Service

Do not connect the jump starting cable to the negative (-) terminal of the battery. Always connect to the recommended earthing point. As defined in the owners handbook or service documentation for that vehicle.

### Charging AGM Batteries

AGM batteries must not be charged with voltages above 14.8 Volts. Doing so will damage them.

### Testing AGM Batteries

Midtronics 393, 394, 493 and 494 testers are not capable of testing AGM batteries. Doing so can give an incorrect result.

When it is necessary to test an AGM battery use the Midtronics EXP1080 tester or the GR1 Diagnostics Charger.

## 3. EQUIPMENT (MINIMUM STANDARD) (pictures are for illustration only)

Traction Battery Charger (or similar stand-alone charger)

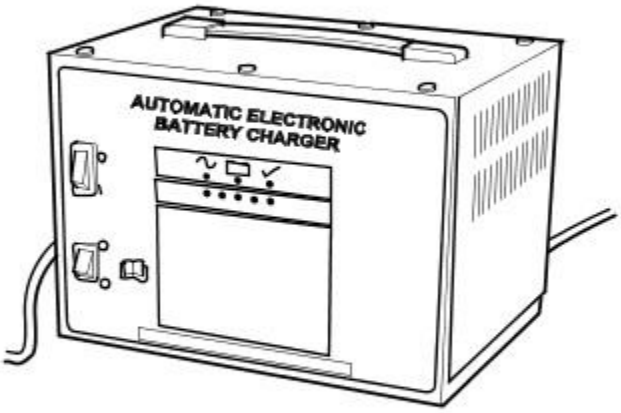


E138126

Midtronics EXP1080 Hand-Held Tester

GETtheMANUALS.org

Digital Multi-Meter or Digital Volt-Ohm Meter (DVOM)

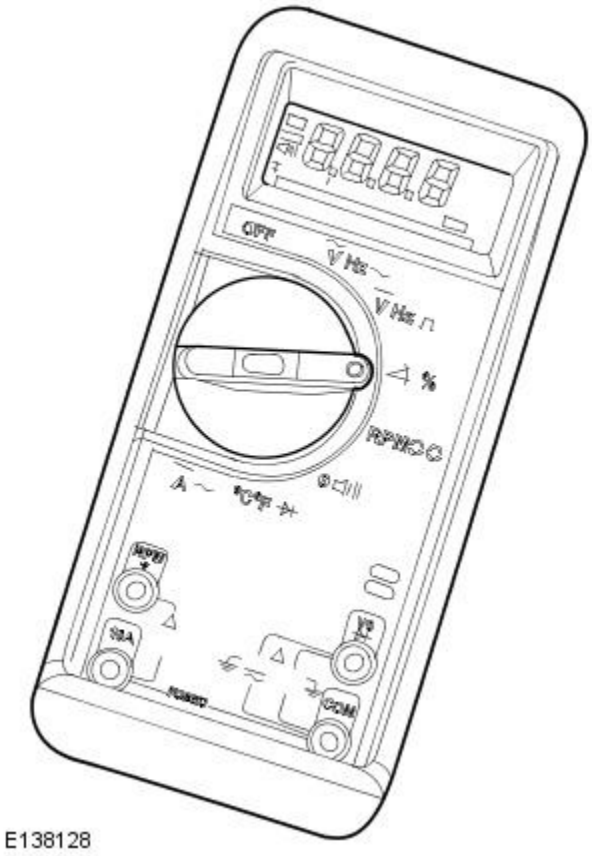


Midtronics GR-1 Diagnostic Charger

GETtheMANUALS.org

E138129

## 4. HEALTH AND SAFETY PRECAUTIONS

• WARNINGS:

BATTERY CELLS CONTAIN SULPHURIC ACID AND EXPLOSIVE MIXTURES OF HYDROGEN AND OXYGEN GASES. IT IS THEREFORE ESSENTIAL THAT THE FOLLOWING SAFETY PRECAUTIONS ARE OBSERVED.

Batteries emit highly explosive hydrogen at all times, particularly during charging. To prevent any potential form of ignition occurring when working in the vicinity of a battery:

- Do not smoke when working near batteries.
- Avoid sparks, short circuits or other sources of ignition in the battery vicinity.
- Switch off current before making or breaking electrical connections.
- Ensure battery charging area is well ventilated.
- Ensure the charger is switched off when: a) connecting to a battery; b) disconnecting from the battery.
- Always disconnect the ground cable from the battery terminal first and reconnect it last.

Batteries contain poisonous and highly corrosive acid. To prevent personal injury, or damage to clothing or the vehicle, the following working practices should be followed when topping up, checking electrolyte specific gravity, removal, refitting or carrying batteries:

- Always wear suitable protective clothing (an apron or similar), safety glasses, a face mask and suitable gloves.
- If acid is spilled or splashed onto clothing or the body, it must be neutralized immediately and then rinsed with clean water. A solution of baking soda or household ammonia and water may be used as a neutralizer.
- In the event of contact with the skin, drench the affected area with water. In the case of contact with the eyes, bathe the affected area with cool clean water for approximately 15 minutes and seek urgent medical attention.
- If battery acid is spilled or splashed on any surface of a vehicle, it should be neutralized and rinsed with clean water.
- Heat is generated when acid is mixed with water. If it becomes necessary to prepare electrolyte of a desired specific gravity, SLOWLY pour the concentrated acid into water (not water into acid), adding small amounts of acid while stirring. Allow the electrolyte to cool if noticeable heat develops. With the exception of lead or lead-lined containers, always use non-metallic receptacles or funnels. Do not store acid in excessively warm locations or in direct sunlight.

Due to their hazardous contents, the disposal of batteries is strictly controlled. When a battery is scrapped, ensure it is disposed of safely, complying with local environmental regulations. If in doubt, contact your local authority for advice on disposal facilities.

## 5. DETERMINING BATTERY CONDITION

The tools used for determining the condition of the battery will depend upon whether it is installed in a vehicle or in spare parts inventory. Concerning an installed battery, procedures will vary if the vehicle is new, or already in service with a customer.

• NOTE: The term `New Vehicle' refers to a vehicle at any part of the delivery process from leaving the factory to arriving at a port of entry, dealership, retailer, including any storage facilities en route or a vehicle being stored prior to sale at dealership / retailer.

• NOTE: Midtronics 393, 394. 493 and 494 testers must not be used to test AGM batteries as these testers are not capable of correctly testing AGM batteries and can give an incorrect result. For AGM battery testing use the EXP1080 tester or the GR1 Diagnostics charger.

### NEW VEHICLES

A Midtronics tester should be used to assess the condition of the battery for new vehicles. The test results should be recorded on the Storage History Sheet (see Vehicle Storage manual).

GETtheMANUALS.org

### Scenario 1 - Dealership / Retailer (Responsibility: Dealer / Retailer)

**1.** Within 24 hours of arrival at the dealer / retailer proceed as follows:

- Perform a Midtronics battery test (See Appendix A.)
- Carry out the recommended actions accordingly.

**2.** If the Midtronics result is "Good Battery" the vehicle may be stored.

- For all new vehicles in storage the transit relay MUST be fitted, or the Transit Mode enabled where used. For vehicles without a transit relay or a Transit Mode, the battery negative cable MUST BE DISCONNECTED from the battery.

**3.** The battery must be tested and/or re-charged every month and MUST be re-charged after every three month period.

**4.** Record your test results on the Storage History Sheet (see Vehicle Storage Manual) to indicate when a re-charge will be necessary.

### Scenario 2 - Delivery to the Customer (Responsibility: Dealer / Retailer)

• NOTE: It is essential that the following actions are conducted in the 24 hours prior to the agreed hand over time:

**1.** Perform a Midtronics Battery test (See Appendix A).

**2.** Carry out the recommended actions accordingly.

**3.** The vehicle should only be released to the customer if Midtronics has tested the battery as "Good Battery"

### Spare Part Batteries

Lead acid batteries will, as a result of natural chemical processes, slowly self discharge themselves over a period of time (even when open circuit and no electrical load applied).

In the case of spare parts batteries, a Midtronics tester should be used to assess the condition of new spare parts batteries.

The batteries must be stored such that they cannot get wet and are not in direct sunlight.

Any batteries which are dropped must be scrapped. This applies even if no external damage is apparent.

### Scenario 1 - Spare Part Batteries Within Dealer Stock But Not Yet Fitted To A Vehicle (Responsibility: Dealer / Retailer)

**1.** For a battery in the Dealer parts or in ready to use stock but not yet fitted to a vehicle the following rules must be followed:

- Check the battery condition on receipt by performing a Midtronics battery test (See Appendix A).
- Batteries should only be returned to storage if the Midtronics tester indicates "Good Battery".
- The battery condition should be rechecked every 30 days by performing a Midtronics battery test (See Appendix A).
- If required batteries should be recharged as described in the "Battery Charging and Maintenance" section of this manual.

**2.** 2 All batteries must be controlled via a FIFO (First In First Out) process to ensure aged batteries are not held and the batteries are not allowed to age unnecessarily.

## VEHICLES IN SERVICE

The Midtronics hand-held tester or the Midtronics Diagnostic Charger are the preferred tools to assess battery condition for vehicles in service. The test results should be recorded on the In-Service Battery Report Form (See Appendix B).

### Midtronics Testing - In-Service Testing Only

• NOTE: The battery surface charge must be removed before this test in accordance with the procedure in Appendix A. Ensure that the battery terminal connectors are clean. When connecting the Midtronics testing equipment, connect the RED clip to the positive (+) battery terminal first, and then connect the BLACK clip to the negative (-) battery terminal. Rock the clips backward and forward to ensure a good connection to the battery.

**1.** Perform a Midtronics battery test (See Appendix A).

**2.** Carry out the recommended actions accordingly.

## 6. BATTERY CHARGING AND MAINTENANCE

### BATTERY CHARGING

GETtheMANUALS.org

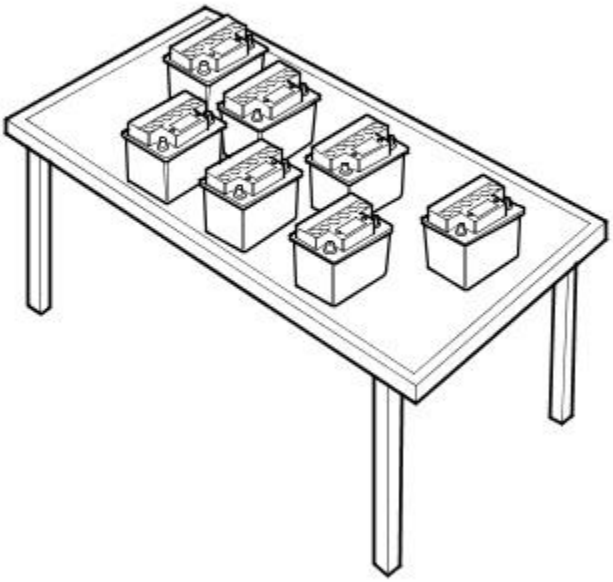

E138130

It is essential that a suitably ventilated defined area exists in each dealership / retailer for battery charging. Likewise, an area should be allotted for scrap batteries, and clearly indicated as such. It is recommended that dealers / retailers always have fully charged batteries ready for use. However the battery MUST BE tested and charged if necessary every month, and charged after three months irrespective of any test.

• CAUTIONS:

⚠ Batteries must be re-charged after a maximum of 3 months storage (see Storage History sheet in the New Vehicle Storage Manual).

⚠ It is very important that when charging batteries using the traction charger or other stand-alone chargers that the charger is set for the correct type of battery before charging commences. If the wrong switch is selected the result would be a battery that is not charged fully and / or overheating can occur. Follow the manufacturers operating instructions.

⚠ Do not charge AGM batteries with voltages over 14.8 volts as this will damage the battery.

To bring a serviceable but discharged battery back to a fully charged condition proceed as follows:

- Check and if necessary top-up the battery electrolyte level.
- Charge the battery using the Midtronics Diagnostic Charger (USA) or Traction Charger (all other markets) following the manufacturers operating instructions.

• NOTE: When using the Midtronics Diagnostic Charger, automatic mode must always be used. After charging and analysis, the charger may display 'Top-Off Charging', press STOP to end. Do not stop charging until the current falls to 5A or less, otherwise the battery will not be fully charged.

## POST-CHARGE TEST METHODS

### New Batteries, Batteries in Storage and In-Service Batteries

The purpose of this test is to ensure that the charging process has fully charged the battery.

• NOTE: IT IS RECOMMENDED THAT THIS TEST IS CONDUCTED AT LEAST 24 HOURS AFTER THE CHARGE CYCLE IS COMPLETED.

GETtheMANUALS.org

CAUTION: DO NOT connect the tester to any other circuit or chassis point.

**1.** Attach the Midtronics Tester to the battery.

**2.** Follow the instructions on the tester to test the battery. Ensure the correct battery type and size is selected.

**3.** Perform the action based on the tester results (see the tester results chart in the Vehicles in Service sub -section of Determining Battery Condition Section).

**4.** Enter the readings and test code obtained on the In Service Battery Report Form.

• NOTE: Midtronics 393, 394. 493 and 494 testers must not be used to test AGM batteries as these testers are not capable of correctly testing AGM batteries and can give an incorrect result. For AGM battery testing use the EXP1080 tester or the GR1 Diagnostics charger.

### BATTERY REPLACEMENT

If it is determined that a battery requires replacement, always refer to the appropriate section of the workshop manual for instructions on removing and installing the battery from the vehicle.

On in service vehicles fitted with a Battery Monitoring System (BMS), the BMS module must be reset following the installation of a new battery. The BMS module reset procedure must be performed using an approved diagnostic system.

### CHECK / TOP-UP BATTERY ELECTROLYTE – Only Applicable to certain Flooded Types of Battery.

• WARNINGS:

AGM TECHNOLOGY BATTERIES ARE FULLY SEALED FOR LIFE AND NO ATTEMPT SHOULD BE MADE TO CHECK OR TOP UP THE ELECTROLYTE LEVEL.

BEFORE CHECKING AND TOPPING-UP THE BATTERY ELECTROLYTE, REFER TO THE HEALTH AND SAFETY PRECAUTIONS SECTION.

Check to ensure the battery is of a type suitable for topping up. These types of batteries will have cell plugs visible on the top face of the battery or a removable access panel to allow access to the cells.

On batteries with a clear or opaque case and level marks, check the electrolyte level by visual inspection of the maximum level indicator mark on the battery casing indicating adequate level above the battery separators.

On batteries with black cases, remove the cell plugs or access panel and ensure the electrolyte level is level with the indicator in the cell hole. A flashlight may be required to see the electrolyte level on this type of battery.

CAUTION: **DO NOT** overfill.

If the electrolyte level is low, top-up using distilled water.

Maintenance free and Valve Regulated (AGM) batteries are sealed and therefore cannot be topped up.

## CHARGING SYSTEM TEST AND DIAGNOSIS

For all vehicles, refer to the Charging System - Diagnosis and Testing in section 414-00 of the Workshop Manual.

GETtheMANUALS.org

## VEHICLE QUIESCENT CURRENT TESTING

• NOTE: On vehicles fitted with a Battery Monitoring System (BMS), the diagnostic routine for quiescent drain testing in the approved diagnostic system should be utilized.

• NOTE: If a customer complains of a vehicle battery that discharges continuously or when left for a prolonged period of time, it is recommended that a quiescent drain test is performed as described below.

• NOTE: The battery drain should be measured using an approved diagnostic system or a Digital Multi-Meter (DVOM).

The vehicle should be in the locked/armed state (for example vehicle alarm fully armed), all doors, engine and luggage compartment lids are open and latched (so as to appear closed from an electrical point of view). The test should take place after the vehicle has entered shutdown mode. The time taken for this to occur after the ignition is switched off varies according to model - Refer to Quiescent Drain in section 414-00 of the Workshop Manual.

• NOTE: When the vehicle is armed, the effect of the security system Light Emitting Diode (LED) flashing is to cause a pulsation in the measured current drain. In this case, either the average current should be taken (using a Digital Multi- Meter (DVOM) with an averaging system) or the current reading taken, ignoring the brief high current peaks.

### EQUIPMENT

Approved diagnostic system with current probe or Digital Multi-Meter (DVOM) with current probe.

### METHOD OF MEASUREMENT

**Using an Approved Diagnostic System**

**1.** Switch off all electrical loads and ensure that the ignition is off.

**2.** Connect the current probe to the approved diagnostic system.

**3.** Calibrate the probe.

**4.** Install a clamp around the battery lead/junction box lead.

**5.** Go to the Quiescent Current Testing section.

**Using a Digital Multi-Meter (DVOM)**

• NOTE: Do not use an in-line DVOM to measure the quiescent drain on vehicles fitted with an electronic throttle. The current exceeds the maximum amount the fuse in the DVOM is capable of handling.

**1.** Switch off all electrical loads and ensure that the ignition is off.

**2.** Connect the current probe to the DVOM.

**3.** Calibrate the probe.

**4.** Install a clamp around the battery lead/junction box lead.

**5.** Go to the following Quiescent Current Testing section.

### QUIESCENT CURRENT TESTING

**1.** Switch ignition to ‘on’ or select ignition mode in keyless vehicles and switch to ‘off’ (do not crank).

**2.** Remove key from ignition switch (where applicable).

**3.** Open and latch all doors, hood and luggage compartment lid.

**4.** Lock the vehicle using the remote function on the remote handset. (Single lock only to avoid volumetric alarm arming).

**5.** Remove any other potential electrical drains such as accessories plugged into accessory sockets.

**6.** Record the amperage readings after the shutdown period. The model specific Amperage readings for quiescent drain are referenced in Quiescent Drain in section 414-00 of the Workshop Manual

**7.** Record the final reading on the battery report form Appendix B.

• NOTE: The preferred method of testing following an excessive current consumption figure is to use a current probe around individual junction box leads to the various suspected circuits to identify a potential cause. This is in preference to the old method of removing fuses for the following reasons:

- Many modules take a considerable time to power down. Each time a fuse is removed and re-fitted, the quiescent drain current may take an extended period of time to return to normal (typically up to 45 minutes).
- The drain may be caused by a module remaining active and preventing the quiescent drain from reducing to normal levels.
- The drain may be caused by a relay winding that is activated. Pulling the fuse can allow this to ‘reset’ and the drain will be lost and go un-diagnosed.

## APPENDIX A BATTERY TEST PROCESS

It is recommended that this test is conducted at least 24 hours after the vehicle engine has been run or the battery charged to avoid the need of surface charge removal or if this time constraint is unacceptable due to circumstances, then conduct the charge strip removal process.

### Part 1 - Surface Charge Removal

• NOTE: Before carrying out a battery test you must ensure that there is no battery surface charge present.

• NOTE: The battery may be tested either on a bench or on the vehicle.

- In the case of on-vehicle testing, the battery must be isolated from the vehicle by removal of the battery negative (-) cable from the battery terminal before the measurement is taken unless the vehicle has a transit relay fitted or is in transit mode.

A vehicle which has had its battery charged or been driven in a 24 hour period before the test, must have its surface charge removed using one of the following methods:

GETtheMANUALS.org

**1.** If 24 hours have passed since the last time the engine was run or the battery charged, proceed to `Part 2 - Battery Test'.

**2.** Turn on the ignition. Switch on the headlamps on high beam for a minimum 3 minutes.

**3.** Switch off the headlamps. For vehicles tested after the transit relay has been removed, disconnect the battery by removal of the negative (-) cable. Vehicles with a transit relay fitted or with a low current transport mode enabled do not need to have the battery disconnected.

**4.** Wait a maximum of 5 minutes before recording test results for any battery measurements.

### Part 2 - Battery Test

• NOTE: The battery surface charge must be removed before this test in accordance with the procedure in Part 1 above. Ensure that the battery terminal connectors are clean. When connecting the Midtronics testing equipment, connect the RED clip to the positive (+) battery terminal first, and then connect the BLACK clip to the negative (-) battery terminal. Rock the clips backward and forward to ensure a good connection to the battery.

• NOTE: Midtronics 393, 394. 493 and 494 testers must not be used to test AGM batteries as these testers are not capable of correctly testing AGM batteries and can give an incorrect result. For AGM battery testing use the EXP1080 tester or the GR1 Diagnostics charger.

CAUTION: **DO NOT** connect the tester to any other circuit or chassis point other than the battery negative terminal.

**1.** Attach the Midtronics tester to the battery.

**2.** Follow the instructions on the tester to test the battery. Ensure the correct battery type and size is selected.

**3.** Perform the action based on the tester results (see table below).

**4.** Enter the readings and test code obtained on the Battery Report Form (Appendix B) or equivalent which records as a minimum the technician's name, Vehicle Identification Number (VIN), Date of check, Midtronics code and Battery Voltage from the Midtronics tester.

At the end of the test, the battery negative (-) cable should be re-attached to the battery terminal.

| TESTER RESULTS | ACTION |
|---|---|
| GOOD BATTERY | Return to service. |
| GOOD RE-CHARGE | Fully charge battery and return to service. |
| CHARGE AND RE-TEST | Fully charge battery. Remove surface charge. Re-test battery. If same result replace battery. |
| REPLACE BATTERY OR BAD CELL BATTERY | Verify surface charge removed. Disconnect battery from vehicle and re-test. If result repeats after surface charge removal, replace battery. **DO NOT RECHARGE**. |
| UNABLE TO DO TEST | Disconnect battery from vehicle and re-test. |

## APPENDIX B : BATTERY REPORT FORM - IN SERVICE BATTERIES ONLY

• NOTE: Fields marked with * are mandatory and must be completed.

| General Information | YES / NO | | YES / NO | |
|---|---|---|---|---|
| Customer Name: | | Dealer/Retailer Code: | * | |
| Repair Order Number: | * | Battery Date Code: | * | |
| Repair Order Date: | * | Number of Times Battery Charged: | * | |
| Repair Order Date: | | Technicians Name: | * | |
| Vehicle Identification Number (VIN): | * | Technicians Signature: | * | |
| Give a detailed description of the symptoms experienced by the customer (attach a separate sheet if necessary) | | | | |
| - | | | | |
| - | | | | |
| - | | | | |
| - | | | | |
| - | | | | |
| - | | | | |
| **Diagnostics (Battery Testing)** | | | | |
| 1: Loose battery clamps | Yes | * | No | * |
| 2: Loose hold down clamps | Yes | | No | |
| 3: Corroded terminal posts | Yes | * | No | * |
| 4: Physical damage/leaks | Yes | | No | |
| 5: Low electrolyte | Yes | * | No | * |
| 6: FEAD belt tension | OK | * | Not OK | * |
| 7: Surface charge removed | Yes | * | No | * |
| 8: Voltage (appendix A) | Yes | * | No | * |
| 9: Quiescent Drain | mA | * | | |
| 10: Vent tube correctly installed | Yes | | No | |
| 11: Midtronics test | | | | |
| Code before charging | * | | | |
| If Midtronics indicates that the battery needs re-charging, charge the battery for 24 hours | | | | |
| Code after charge | * | | | |
| Result after charge | * | | | |
| If "good and re-charge" charge the battery for an additional 24 hours. | | | | |
| If "charge and re-test" for both before and after 24 hours charge renew the battery | | | | |
| Only renew the battery if "renew battery", "bad cell" or charge and re-test has been displayed twice. | | | | |
| **Comments** | | | | |
| - | | | | |
| - | | | | |
| - | | | | |
| - | | | | |
| - | | | | |

GETtheMANUALS.org

# Battery and Charging System - General Information - Quiescent Drain

Description and Operation

## QUIESCENT DRAIN - TYPICAL VALUES

• NOTE: The quiescent drain after the initial shutdown period should not exceed the value shown in the table.

**Jaguar Quiescent Drain Values**

| MODEL | SHUT DOWN PERIOD (minutes) | TYPICAL VALUES BATTERY DRAIN (mA) |
|---|---|---|
| XJS 3.2 | 60 | <30 |
| Sovereign 3.2 | 60 | <37.3 |
| XJ6 4.0 | 60 | <38.6 |
| XJS | 60 | <43.9 |
| XJ6 (X300) (1995MY) | 60 | <43 |
| XJ8 (X300) | 60 | <30 |
| XK8 (X100) | 60 | <30 |
| S-Type (X200) | 60 | <30 |
| X-Type (X400) | 30 | <30 |
| XJ6 (X350) | 40 | <30 |
| XJ8 (X350) | 40 | <30 |
| XK (X150) | 3 (after lock/arm condition) [2] | <30 |
| | 33 (unlocked) | <30 |
| XF (X250) | 3 (after lock/arm condition) [2] | <30 |
| | 33 (unlocked) | <30 |
| XJ (X351) | 3 (afterlock/arm condition) [2] | <30 |
| | 33 (unlocked) | <30 |

• NOTE:

1. The total current drain will be higher if certain approved accessories are fitted (for example: tracker, trailer module, etc.)

2. Applies to vehicles without Tire Pressure Monitoring System (TPMS). Vehicle shut-down period with TPMS is approximately 15 minutes.

GETtheMANUALS.org

# Battery and Charging System - General Information - Charging SystemV8 4.2L Petrol/V8 S/C 4.2L Petrol/2.5L NA V6 - AJV6/3.0L NA V6 - AJ27

Diagnosis and Testing

## Inspection and Verification

1. **1.** Verify the customer concern by operating the system.
2. **2.** Visually inspect for obvious signs of mechanical and electrical damage.

**Visual Inspection Chart**

| Mechanical | Electrical |
|---|---|
| • Generator<br>• Generator pulley (vehicles fitted with manual transmission<br>• Drive belt<br>• Drive belt tensioner | • Generator<br>• Battery<br>• Fuse 15 (5A) (primary junction fuse box)<br>• Fuse 30 (5A) (Rear power distribution box). Vehicles with 4.2L engine.<br>• Circuit(s)<br>• Electrical connector(s) |

3. **3.** If an obvious cause for an observed or reported concern is found, correct the cause (if possible) before proceeding to the next step.
4. **4.** If the concern is not visually evident , verify the symptom and refer to the Symptom Chart.

## Symptom Chart

**Charging system faults/codes and related causes**

| Symptom | Possible Sources | Action |
|---|---|---|
| DTC P1146 Low input from the engine control module (ECM) on the voltage regulator request signal wire. Vehicles fitted with 2.5L or 3.0L engine. | * Wiring harness.<br>* Generator.<br>* ECM. | * GO to Pinpoint Test A. |
| DTC P1244 Generator overcharging. Vehicles fitted with 2.5L or 3.0L engine. | * Battery.<br>* Wiring harness.<br>* Generator.<br>* Fuse 15 (5A) Primary junction fuse box.<br>* Circuit. | * GO to Pinpoint Test B. |
| DTC P1632 Charging system failure. Vehicles fitted with 2.5L or 3.0L engine. | * Accessory drive belt.<br>* Wiring harness.<br>* Fuse 15 (5A) Primary junction fuse box.<br>* Circuit.<br>* Generator.<br>* Battery.<br>* ECM. | * CHECK drive belt tension. For additional information, refer to Section 303-05 Accessory Drive.<br>* GO to Pinpoint Test C. |
| DTC P1632 Charging system failure. Vehicles fitted with 4.2L engine. | * Accessory drive belt.<br>* Wiring harness.<br>* Electrical connector.<br>* Fuse 30 (5A) rear power distribution box.<br>* Battery.<br>* Generator.<br>* ECM. | * CHECK drive belt tension. For additional information, refer to Section 303-05 Accessory Drive.<br>* GO to Pinpoint Test D. |
| DTC P1629 Generator load monitoring signal failure. Vehicles fitted with 2.5L or 3.0L engine. | * Electrical connector.<br>* Wiring harness.<br>* Generator.<br>* ECM. | * GO to Pinpoint Test E. |
| The charging system warning indicator is on, intermittent or flickers with the engine running. Vehicles fitted with 4.2L engine. | * Accessory drive belt.<br>* Wiring harness.<br>* Fuse 15 (5A) Primary junction fuse box.<br>* Battery (warning light on with low voltage).<br>* Generator.<br>* ECM.<br>* Instrument cluster (IC).<br>* Control area network (CAN). | * CHECK drive belt tension. For additional information<br>REFER to Section 303-05 Accessory Drive.<br>* GO to Pinpoint Test F. |
| The charging system warning indicator is on, intermittent or flickers with the engine running. Vehicles fitted with 2.5L or 3.0L engine. | * Accessory drive belt.<br>* Wiring harness.<br>* Fuse 15 (5A) Primary junction fuse box.<br>* Battery (warning light on with low voltage).<br>* Generator.<br>* ECM.<br>* Instrument cluster (IC).<br>* Control area network (CAN). | * CHECK drive belt tension. For additional information<br>REFER to Section 303-05 Accessory Drive.<br>* GO to Pinpoint Test G. |
| Generator not charging battery keeps going flat. | * Drive belt<br>* Wiring harness.<br>* Battery.<br>* Fuse 15 (5A) Primary junction fuse box .<br>* Generator.<br>* Generator pulley (vehicles fitted with manual transmission). | * CHECK drive belt tension. For additional information<br>REFER to Section 303-05 Accessory Drive.<br>* GO to Pinpoint Test H. |

GETtheMANUALS.org

| | | |
|---|---|---|
| Generator noisy | * Generator.<br>* Drive belt.<br>* Drive belt tensioner | * CHECK drive belt tension. For additional information REFER to Section 303-05 Accessory Drive.<br>* GO to Pinpoint Test I. |
| Radio interference | * Wiring harness<br>* Generator | * GO to Pinpoint Test J. |

**PINPOINT TEST A : LOW INPUT ON THE VOLTAGE REQUEST SIGNAL WIRE FROM THE ECM (P1146). VEHICLES FITTED WITH 2.5L OR 3.0L ENGINE.**

| TEST CONDITIONS | DETAILS/RESULTS/ACTIONS |
|---|---|
| **A1: CHECK THE VOLTAGE REGULATOR REQUEST SIGNAL WIRE FOR A SHORT TO GROUND** | |
| | 1 Disconnect the ECM electrical connector PI1 and the generator electrical connector PI47. |
| | 2 Measure the resistance between electrical connector or PI47 pin 1 (YR) and ground. |
| | Is the resistance less than 10,000 ohms?<br>**Yes**<br>REPAIR short to ground between the generator and the ECM. CLEAR the DTC. TEST the system for normal operation.<br>**No**<br>GO to A2. |
| **A2: CHECK THE VOLTAGE REGULATOR REQUEST SIGNAL WIRE FOR OPEN CIRCUIT** | |
| | 1 Measure the resistance between electrical connector PI47 pin 1 (YR) and ECM electrical connector PI1 pin 53 (SR). |
| | Is the resistance less than 5 ohms?<br>**Yes**<br>GO to A3.<br>**No**<br>REPAIR the circuit from the ECM to the generator. CLEAR the DTC. TEST the system for normal operation. |
| **A3: CHECK THE OPERATION OF THE GENERATOR CHARGE WARNING INDICATOR LAMP** | |
| | 1 Connect the ECM electrical connector PI1 and the generator electrical connector or PI47. |
| | 2 CLEAR the DTC. START and RUN the engine at 1500 RPM with no electrical load applied. |
| | Does the generator charge warning indicator lamp illuminate with in 30 seconds of the engine being started?<br>**Yes**<br>INSTALL a new generator. CLEAR the DTC. TEST the system for normal operation. If the DTC is repeated INSTALL a new ECM. For additional information REFER to Section 303-14A Electronic Engine Controls / 303-14B Electronic Engine Controls / 303-14C Electronic Engine Controls. or REFER to Section 303-14A Electronic Engine Controls / 303-14B Electronic Engine Controls / 303-14C Electronic Engine Controls.<br>**No**<br>GO to A4. |
| **A4: CHECK THE OPERATION OF THE GENERATOR CHARGE WARNING INDICATOR LAMP AFTER 15 MINUTES** | |
| | 1 RUN the engine at idle for 15 minutes and then increase engine speed to 1500RPM for one minute with no electrical load applied. |
| | Does the generator charge warning indicator lamp illuminate or is DTC repeated?<br>**Yes**<br>INSTALL a new generator. CLEAR the DTC. TEST the system for normal operation. If the DTC is repeated INSTALL a new ECM. For additional information REFER to Section 303-14A Electronic Engine Controls / 303-14B Electronic Engine Controls / 303-14C Electronic Engine Controls. or REFER to Section 303-14A Electronic Engine Controls / 303-14B Electronic Engine Controls / 303-14C Electronic Engine Controls.<br>**No**<br>DIAGNOSE the ECM. For additional information REFER to Section 303-14A Electronic Engine Controls / 303-14B Electronic Engine Controls / 303-14C Electronic Engine Controls. or REFER to Section 303-14A Electronic Engine Controls / 303-14B Electronic Engine Controls / 303-14C Electronic Engine Controls. |

**PINPOINT TEST B : GENERATOR OVERCHARGING (P1244). VEHICLES FITTED WITH 2.5L OR 3.0L ENGINE.**

| TEST CONDITIONS | DETAILS/RESULTS/ACTIONS |
|---|---|
| **B1: CHECK THE VOLTAGE REGULATOR REQUEST SIGNAL WIRE FOR A SHORT TO BATTERY POSITIVE** | |
| | 1 Disconnect the ECM electrical connector PI1 and the generator connector PI47. |
| | 2 Measure the resistance between electrical connector PI47 pin 1 (YR) and the generator battery positive cable. |
| | Is the resistance less than 10,000 ohms?<br>**Yes**<br>REPAIR short to the generator battery positive cable. CLEAR the DTC. TEST the system for normal operation.<br>**No**<br>GO to B2. |
| **B2: CHECK THE VOLTAGE REGULATOR REQUEST SIGNAL WIRE FOR OPEN CIRCUIT** | |
| | 1 Measure the resistance between electrical PI1 pin 53 (YR) and PI47 pin 1 (YR). |
| | Is the resistance less than 5 ohms?<br>**Yes**<br>INSTALL a new generator. CLEAR the DTC. TEST the system for normal operation. If the DTC is repeated, INSTALL a new ECM. For additional information REFER to Section 303-14A Electronic Engine Controls / 303-14B Electronic Engine Controls / 303-14C Electronic Engine Controls. or REFER to Section 303-14A Electronic Engine Controls / 303-14B Electronic Engine Controls / 303-14C Electronic Engine Controls.<br>**No**<br>REPAIR the circuit from the ECM to the generator. CLEAR the DTC. TEST the system for normal operation. |

**PINPOINT TEST C : CHARGING SYSTEM FAILURE (1632). VEHICLES FITTED WITH 2.5L OR 3.0L ENGINE.**

| TEST CONDITIONS | DETAILS/RESULTS/ACTIONS |
|---|---|
| **C1: CHECK THE BATTERY VOLTAGE WITH THE ENGINE RUNNING AND NO ELECTRICAL LOADS APPLIED** | |
| | 1 START and RUN the engine at idle with no electrical load applied. |
| | 2 Measure the maximum battery voltage reached with in 5 minutes. |
| | Is the voltage less than 14.5 volts?<br>**Yes**<br>GO to C2.<br>**No**<br>GO to C6. |
| **C2: CHECK THE BATTERY** | |
| | 1 Carry out a battery condition test. |

GETtheMANUALS.org

| | |
|---|---|
| | Is the battery ok?<br>**Yes**<br>GO to C3.<br>**No**<br>INSTALL a new battery. CLEAR the DTC. TEST the system for normal operation. |
| **C3: CHECK FOR BATTERY VOLTAGE AT PI 47 WITH ENGINE RUNNING AND NO ELECTRICAL LOADS APPLIED** | |
| | 1 START vehicle and allow to idle. |
| | 2 DISCONNECT the generator electrical connector PI 47 |
| | 3 MEASURE the voltage at PI 47 pin 1 (YR) with in 5 minutes of vehicle start. |
| | Is the voltage more than 10 volts?<br>**Yes**<br>GO to C9.<br>**No**<br>GO to C4. |
| **C4: CHECK THE VOLTAGE REGULATOR REQUEST (C TERMINAL) SIGNAL WIRE FOR A SHORT TO GROUND** | |
| | 1 Measure the resistance between electrical connector PI47 pin 1 (YR) and ground. |
| | Is the resistance less than 10,000 ohms?<br>**Yes**<br>REPAIR the circuit from the ECM to the generator. Clear the DTC. TEST the system for normal operation.<br>**No**<br>INSTALL a new generator. CLEAR the DTC. TEST the system for normal operation. If the DTC is repeated INSTALL a new ECM. For additional information REFER to Section 303-14A Electronic Engine Controls / 303-14B Electronic Engine Controls / 303-14C Electronic Engine Controls. or REFER to Section 303-14A Electronic Engine Controls / 303-14B Electronic Engine Controls / 303-14C Electronic Engine Controls. |
| **C5: CHECK CONTINUITY OF THE VOLTAGE REGULATOR REQUEST (C TERMINAL) SIGNAL WIRE** | |
| | 1 Disconnect the battery ground cable. |
| | 2 Disconnect the ECM electrical connector PI1 and the generator electrical or PI47. |
| | 3 Measure the resistance between electrical connector PI47 pin 1 (YR) and ECM electrical connector PI pin 53 (YR). |
| | Is the resistance less than 5 ohms?<br>**Yes**<br>GO to C4.<br>**No**<br>REPAIR the circuit from the ECM to the generator. Clear the DTC. TEST the system for normal operation. |
| **C6: CHECK THE GENERATOR CHARGE WARNING INDICATOR LAMP AND COOLING FAN OPERATION WITH THE ENGINE RUNNING AT IDLE SPEED** | |
| | 1 START and RUN the engine at idle speed for 15 minutes with no electrical load applied. |
| | Is the generator charge warning indicator and the cooling fans operating at maximum speed?<br>**Yes**<br>GO to C8.<br>**No**<br>GO to C7. |
| **C7: CHECK THE GENERATOR CHARGE WARNING INDICATOR LAMP AND COOLING FAN OPERATION WITH THE ENGINE RUNNING FOR A FURTHER MINUTE AT 1500 RPM** | |
| | 1 Increase the engine speed to 1500 RPM for one minute with no electrical load applied. |
| | Is the generator charge warning lamp illuminated and cooling fans operating at maximum speed?<br>**Yes**<br>GO to C8.<br>**No**<br>INSTALL a fully charged slave battery. CLEAR the DTC. TEST the system for normal operation. |
| **C8: CHECK C TERMINAL FOR A SHORT TO BATTERY POSITIVE CABLE** | |
| | 1 Disconnect the battery ground cable. |
| | 2 Disconnect the ECM electrical PI1 and the generator electrical connector PI47 |
| | 3 Measure the resistance between the generator electrical connector PI47 pin 1 (YR) and the generator battery positive cable. |
| | Is the resistance less than 10,000 ohms?<br>**Yes**<br>REPAIR the circuit from the ECM to the generator. CLEAR the DTC. TEST the system for normal operation.<br>**No**<br>INSTALL a new generator. CLEAR the DTC. TEST the system for normal operation. If the DTC is repeated INSTALL a new ECM. For additional information REFER to Section 303-14A Electronic Engine Controls / 303-14B Electronic Engine Controls / 303-14C Electronic Engine Controls. or REFER to Section 303-14A Electronic Engine Controls / 303-14B Electronic Engine Controls / 303-14C Electronic Engine Controls. |
| **C9: CHECK THE GENERATOR 'L' TERMINAL WIRE FOR A SHORT TO GROUND** | |
| | 1 Measure the resistance between electrical connector PI47 pin 1 (YR) and ground. |
| | Is the resistance less than 10,000 ohms?<br>**Yes**<br>REPAIR the circuit between the electrical connector PI47 pin 1 (YR) and the ECM. Clear the DTC. TEST the system for normal operation.<br>**No**<br>GO to C10. |
| **C10: CHECK THE GENERATOR 'L' TERMINAL WIRE FOR A SHORT TO BATTERY POSITIVE** | |
| | 1 Measure the resistance between electrical connector PI47 pin 1 (YR) and battery positive |
| | Is the resistance less than 10,000 ohms?<br>**Yes**<br>REPAIR the circuit from the ECM to the generator. Clear the DTC. TEST the system for normal operation.<br>**No**<br>GO to C11. |
| **C11: CHECK THE CONTINUITY OF THE GENERATOR 'L' TERMINAL WIRE** | |
| | 1 Disconnect the battery ground cable. |
| | 2 Disconnect the ECM electrical connector PI1 and the generator electrical connector PI47 |
| | 3 Measure the resistance between PI1 pin 79 (YR) and PI47 pin 1 (YR). |
| | Is the resistance less than 5 ohms?<br>**Yes**<br>INSTALL a new generator. TEST the system for normal operation.If the DTC is repeated INSTALL a new ECM. For additional information REFER to Section 303-14A Electronic Engine Controls / 303-14B Electronic Engine Controls / 303-14C Electronic Engine Controls. or REFER to Section 303-14A Electronic Engine Controls / 303-14B Electronic Engine Controls / 303-14C Electronic Engine Controls. |

ICE-Technical.com

| | |
|---|---|
| | **No**<br>REPAIR the circuit from the ECM to the generator. TEST the system for normal operation. |

| PINPOINT TEST D : CHARGING SYSTEM FAILURE (1632). VEHICLES FITTED WITH 4.2L ENGINE. | |
|---|---|
| **TEST CONDITIONS** | **DETAILS/RESULTS/ACTIONS** |
| **D1: CHECK THE BATTERY VOLTAGE WITH THE ENGINE RUNNING AND NO ELECTRICAL LOADS APPLIED** | |
| | 1 START and RUN the engine at idle with no electrical load applied. |
| | 2 Measure the battery voltage. |
| | Is the voltage more than 13 volts.<br>**Yes**<br>GO to D2.<br>**No**<br>INSTALL a fully charged battery. GO to D5. |
| **D2: CHECK THE GENERATOR 'S' TERMINAL FOR BATTERY VOLTAGE** | |
| | 1 MEASURE the voltage at generator electrical connector PI 47 pin 3 (NG). |
| | Is the voltage more than 10 volts.<br>**Yes**<br>GO to D5.<br>**No**<br>GO to D3. |
| **D3: CHECK FUSE 30 IN THE RPDB** | |
| | 1 Check fuse 30 in the RPDB |
| | Is the fuse ok?<br>**Yes**<br>REPAIR the circuit from the RPDB to the generator. Clear the DTC. TEST the system for normal operation.<br>**No**<br>GO to D4. |
| **D4: CHECK THE GENERATOR 'S' TERMINAL FOR A SHORT TO GROUND** | |
| | 1 Measure the resistance between electrical connector PI47 pin 3 (NG) and ground. |
| | Is the resistance less than 10,000 ohms?<br>**Yes**<br>REPAIR the circuit between the electrical connector PI47 pin 3 (NG) and RPDB. INSTALL a new fuse. Clear the DTC. TEST the system for normal operation.<br>**No**<br>INSTALL a new fuse. Clear the DTC. TEST the system for normal operation. |
| **D5: CHECK FOR BATTERY VOLTAGE AT GENERATOR 'L' TERMINAL WITH ENGINE RUNNING AND NO ELECTRICAL LOADS APPLIED** | |
| | 1 Disconnect generator electrical connector PI 47 |
| | 2 MEASURE the voltage at generator electrical connector PI 47 pin 1 |
| | Is the voltage more than 10 volts.<br>**Yes**<br>INSTALL a new generator. CLEAR the DTC. TEST the system for normal operation.<br>**No**<br>GO to D6. |
| **D6: CHECK THE GENERATOR 'L' TERMINAL WIRE FOR A SHORT TO GROUND** | |
| | 1 Measure the resistance between electrical connector PI47 pin 1 (YR) and ground. |
| | Is the resistance less than 10,000 ohms?<br>**Yes**<br>REPAIR the circuit between the electrical connector PI47 pin 1 (YR) and the ECM. Clear the DTC. TEST the system for normal operation.<br>**No**<br>GO to D7. |
| **D7: CHECK THE GENERATOR 'L' TERMINAL WIRE FOR A SHORT TO BATTERY** | |
| | 1 Measure the resistance between electrical connector PI47 pin 1 (YR) and battery positive |
| | Is the resistance less than 10,000 ohms?<br>**Yes**<br>REPAIR the circuit from the ECM to the generator. Clear the DTC. TEST the system for normal operation.<br>**No**<br>GO to D8. |
| **D8: CHECK CONTINUITY OF THE GENERATOR 'L' TERMINAL WIRE** | |
| | 1 Disconnect the battery ground cable. |
| | 2 Disconnect the ECM electrical connector PI1 and the generator electrical or PI47. |
| | 3 Measure the resistance between electrical connector PI47 pin 1 (YR) and ECM electrical connector PI pin 79 (YR). |
| | Is the resistance less than 5 ohms?<br>**Yes**<br>INSTALL a new generator. CLEAR the DTC. TEST the system for normal operation.<br>**No**<br>REPAIR the circuit from the ECM to the generator. Clear the DTC. TEST the system for normal operation. |

| PINPOINT TEST E : GENERATOR LOAD MONITORING SIGNAL (FR) FAILURE (P1629). VEHICLES FITTED WITH 2.5L OR 3.0L ENGINE. | |
|---|---|
| **TEST CONDITIONS** | **DETAILS/RESULTS/ACTIONS** |
| **E1: CHECK GENERATOR CONNECTOR PI47 FOR DAMAGE** | |
| | 1 INSPECT generator connector PI47 for damage, ensure connector is correctly installed. |
| | Is the generator connector PI47 damaged?<br>**Yes**<br>REPAIR generator connector PI47. TEST the system for normal operation<br>**No**<br>GO to E2. |
| **E2: CHECK IGNITION FEED TO GENERATOR ELECTRICAL CONNECTOR** | |
| | 1 Turn the ignition switch to the on position |
| | 2 MEASURE the voltage at generator electrical connector PI 47 pin 2 (GO) |

GETtheMANUALS.org

| | |
|---|---|
| | Is the voltage more than 10 volts?<br>**Yes**<br>GO to E3.<br>**No**<br>REPAIR the circuit between the ignition switch and the generator electrical connector. CLEAR the DTC. TEST the system for normal operation. |
| **E3: CHECK THE SIGNAL WIRE (FR) FOR A SHORT TO BATTERY POSITIVE** | |
| | 1 Disconnect the battery ground cable. |
| | 2 Measure the resistance between electrical connector PI47 pin 3 (WR) and the generator battery positive cable. |
| | Is the resistance less than 10,000 ohms?<br>**Yes**<br>REPAIR the short to the generator battery positive cable. CLEAR the DTC. TEST the system for normal operation.<br>**No**<br>GO to E4. |
| **E4: CHECK THE SIGNAL WIRE (FR) FOR A SHORT TO GROUND** | |
| | 1 Measure the resistance between electrical connector PI47 pin 3 (WR) and ground. |
| | Is the resistance less than 10,000 ohms?<br>**Yes**<br>REPAIR the circuit from the ECM to the generator. CLEAR the DTC. TEST the system for normal operation.<br>**No**<br>GO to E5. |
| **E5: CHECK THE SIGNAL WIRE (FR) FOR OPEN CIRCUIT** | |
| | 1 Disconnect the ECM electrical connector PI1 and the generator electrical connector PI47 . |
| | 2 Measure the resistance between electrical connector PI47 pin 3 (WR) and the ECM electrical connector PI1 pin 65 (WR). |
| | Is the resistance less than 5 ohms?<br>**Yes**<br>INSTALL a new generator. CLEAR the DTC. TEST the system for normal operation.<br>**No**<br>REPAIR the circuit from the ECM to the generator. CLEAR the DTC. TEST the system for normal operation. |

**PINPOINT TEST F : THE GENERATOR CHARGE WARNING INDICATOR LAMP IS ON WITH THE ENGINE RUNNING VEHICLES FITTED WITH 4.2L ENGINE**

| TEST CONDITIONS | DETAILS/RESULTS/ACTIONS |
|---|---|
| **F1: CHECK THE BATTERY VOLTAGE** | |
| | 1 Measure the battery voltage. |
| | Is the voltage less than 12 volts?<br>**Yes**<br>Charge the battery.GO to F2.<br>**No**<br>GO to F3. |
| **F2: CHECK THE BATTERY** | |
| | 1 Carry out a battery condition test. |
| | Is the battery ok?<br>**Yes**<br>GO to F3. .<br>**No**<br>INSTALL a new battery. TEST the system for normal operation. |
| **F3: CHECK THE BATTERY VOLTAGE WITH THE ENGINE RUNNING AND NO ELECTRICAL LOADS APPLIED** | |
| | 1 START and RUN the engine at idle in park. Measure the battery voltage. |
| | Is the voltage less than 13 volts?<br>**Yes**<br>GO to F5.<br>**No**<br>GO to F4. |
| **F4: CHECK THE GROUND CIRCUIT** | |
| | 1 Turn the ignition switch to the RUN position. Measure the resistance between the generator casing and the battery negative cable. |
| | Is the resistance less than 5 ohms?<br>**Yes**<br>GO to F7.<br>**No**<br>REPAIR the ground circuit between the generator to the battery negative terminal. TEST the system for normal operation. |
| **F5: CHECK THE GENERATOR OUTPUT VOLTAGE AT THE GENERATOR BATTERY POSITIVE CABLE TERMINAL, WITH THE ENGINE RUNNING AND NO ELECTRICAL LOADS APPLIED** | |
| | 1 START and RUN the engine at idle in park. Measure the voltage between the generator battery positive cable electrical connector ST7 (R) and generator casing. |
| | Is the voltage less than 13 volts?<br>**Yes**<br>GO to F6.<br>**No**<br>REPAIR the possitive battery cable circuit from the generator to the battery. TEST the system for normal operation. |
| **F6: CHECK THE CHARGE WARNING LAMP IS ILLUMINATED WITH THE ENGINE RUNNING** | |
| | 1 INSPECT the charge warning lamp. |
| | Is the charge warning lamp illuminated?<br>**Yes**<br>GO to F7.<br>**No**<br>GO to F1. |
| **F7: CHECK GENERATOR CONNECTOR PI47 FOR DAMAGE** | |
| | 1 INSPECT generator connector PI47 for damage, make sure connector is correctly installed. |
| | Is the generator connector PI47 damaged?<br>**Yes**<br>REPAIR generator connector PI47. TEST the system for normal operation<br>**No**<br>GO to F8. |

GETtheMANUALS.org

| | |
|---|---|
| **F8: CHECK FOR IGNITION SUPPLY VOLTAGE TO THE GENERATOR** | |
| | 1 Disconnect the generator electrical connector PI47. |
| | 2 Turn the ignition to the RUN position.. |
| | 3 Measure the voltage between the generator connector PI47 pin 2 (GO) and ground. |
| | Is the voltage less than 10 volts?<br>**Yes**<br>GO to F9.<br>**No**<br>GO to F11. |
| **F9: CHECK FUSE 15 IN THE PRIMARY JUNCTION FUSE BOX** | |
| | 1 Check the fuse. |
| | Is the fuse ok?<br>**Yes**<br>REPAIR the circuit between ignition and the generator. TEST the system for normal operation.<br>**No**<br>GO to F10. |
| **F10: CHECK FUSE 15 OF THE PRIMARY JUNCTION FUSE BOX FOR A SHORT TO GROUND** | |
| | 1 Measure the resistance between electrical connector CA2 pin 1 (GO) and ground. |
| | Is the resistance less than 10,000 ohms?<br>**Yes**<br>REPAIR short to ground between the primary junction fuse box and the generator. INSTALL a new fuse. TEST the system for normal operation.<br>**No**<br>INSTALL a new fuse. TEST the system for normal operation. |
| **F11: CHECK FOR BATTERY VOLTAGE AT SUPPLY (S TERMINAL) WIRE** | |
| | 1 Measure the voltage between the generator electrical connector PI47 pin 3 (NG) and ground. |
| | Is the voltage less than 10 volts?<br>**Yes**<br>GO to F12.<br>**No**<br>GO to F14. |
| **F12: CHECK FUSE 30 IN THE REAR DISTRIBUTION BOX** | |
| | 1 Check the fuse. |
| | Is the fuse ok?<br>**Yes**<br>REPAIR the circuit between rear power distribution box and the generator. TEST the system for normal operation.<br>**No**<br>GO to F13. |
| **F13: CHECK FUSE 30 IN THE REAR DISTRIBUTION BOX FOR A SHORT TO GROUND** | |
| | 1 Measure the resistance between electrical connector CA64 pin 34 (NG) and ground. |
| | Is the resistance less than 10,000 ohms?<br>**Yes**<br>REPAIR short to ground between the rear bistribution box and the generator. INSTALL a new fuse. TEST the system for normal operation.<br>**No**<br>INSTALL a new fuse. TEST the system for normal operation. |
| **F14: CHECK THE GENERATOR 'L' TERMINAL WIRE FOR A SHORT TO GROUND** | |
| | 1 Measure the resistance between electrical connector PI47 pin 1 (YR) and ground. |
| | Is the resistance less than 10,000 ohms?<br>**Yes**<br>REPAIR the circuit between the electrical connector PI47 pin 1 (YR) and the ECM. Clear the DTC. TEST the system for normal operation.<br>**No**<br>GO to F15. |
| **F15: CHECK THE GENERATOR 'L' TERMINAL WIRE FOR A SHORT TO BATTERY** | |
| | 1 Measure the resistance between electrical connector PI47 pin 1 (YR) and battery positive |
| | Is the resistance less than 10,000 ohms?<br>**Yes**<br>REPAIR the circuit from the ECM to the generator. Clear the DTC. TEST the system for normal operation.<br>**No**<br>GO to F16. |
| **F16: CHECK THE CONTINUITY OF THE GENERATOR 'L' TERMINAL WIRE FOR A SHORT TO BATTERY** | |
| | 1 Disconnect the battery ground cable. |
| | 2 Disconnect the ECM electrical connector PI1 and the generator electrical connector PI47 |
| | 3 Measure the resistance between PI1 pin 79 (YR) and PI47 pin 1 (YR). |
| | Is the resistance less than 5 ohms?<br>**Yes**<br>INSTALL a new generator. TEST the system for normal operation.If the DTC is repeated INSTALL a new ECM. For additional information REFER to Section 303-14A Electronic Engine Controls / 303-14B Electronic Engine Controls / 303-14C Electronic Engine Controls. or REFER to Section 303-14A Electronic Engine Controls / 303-14B Electronic Engine Controls / 303-14C Electronic Engine Controls.<br>**No**<br>REPAIR the circuit from the ECM to the generator. TEST the system for normal operation. |

| **PINPOINT TEST G : THE GENERATOR CHARGE WARNING INDICATOR LAMP IS ON WITH THE ENGINE RUNNING VEHICLES FITTED WITH 2.5L OR 3.0L ENGINE** | |
|---|---|
| **TEST CONDITIONS** | **DETAILS/RESULTS/ACTIONS** |
| **G1: CHECK THE BATTERY VOLTAGE** | |
| | 1 Measure the battery voltage. |
| | Is the voltage less than 12 volts?<br>**Yes**<br>Charge the battery.GO to G2.<br>**No**<br>GO to G3. |
| **G2: CHECK THE BATTERY** | |
| | 1 Carry out a battery condition test. |

GETtheMANUALS.org

| | |
|---|---|
| | Is the battery ok?<br>**Yes**<br>GO to G3.<br>**No**<br>INSTALL a new battery. TEST the system for normal operation. |
| **G3: CHECK THE BATTERY VOLTAGE WITH THE ENGINE RUNNING AND NO ELECTRICAL LOADS APPLIED** | |
| | 1 START and RUN the engine at idle in park. Measure the battery voltage. |
| | Is the voltage less than 13 volts?<br>**Yes**<br>GO to G5.<br>**No**<br>GO to G4. |
| **G4: CHECK THE GROUND CIRCUIT** | |
| | 1 Turn the ignition switch to the RUN position. Measure the resistance between the generator casing and the battery negative cable. |
| | Is the resistance less than 5 ohms?<br>**Yes**<br>GO to G7.<br>**No**<br>REPAIR the ground circuit between the generator to the battery negative terminal. TEST the system for normal operation. |
| **G5: CHECK THE GENERATOR OUTPUT VOLTAGE AT THE GENERATOR BATTERY POSITIVE CABLE TERMINAL, WITH THE ENGINE RUNNING AND NO ELECTRICAL LOADS APPLIED** | |
| | 1 START and RUN the engine at idle in park. Measure the voltage between the generator battery positive cable electrical connector ST7 (R) and generator casing. |
| | Is the voltage less than 13 volts?<br>**Yes**<br>GO to G6.<br>**No**<br>REPAIR the possitive battery cable circuit from the generator to the battery. TEST the system for normal operation. |
| **G6: CHECK THE CHARGE WARNING LAMP IS ILLUMINATED WITH THE ENGINE RUNNING** | |
| | 1 INSPECT the charge warning lamp. |
| | Is the charge warning lamp illuminated?<br>**Yes**<br>GO to G7.<br>**No**<br>GO to G1. |
| **G7: CHECK GENERATOR CONNECTOR PI47 FOR DAMAGE** | |
| | 1 INSPECT generator connector PI47 for damage, make sure connector is correctly installed. |
| | Is the generator connector PI47 damaged?<br>**Yes**<br>REPAIR generator connector PI47. TEST the system for normal operation<br>**No**<br>GO to G8. |
| **G8: CHECK FOR IGNITION SUPPLY VOLTAGE TO THE GENERATOR** | |
| | 1 Disconnect the generator electrical connector PI47. |
| | 2 Turn the ignition to the RUN position.. |
| | 3 Measure the voltage between the generator connector PI47 pin 2 (GO) and ground. |
| | Is the voltage less than 10 volts?<br>**Yes**<br>GO to G9.<br>**No**<br>GO to G11. |
| **G9: CHECK FUSE 15 IN THE PRIMARY JUNCTION FUSE BOX** | |
| | 1 Check the fuse. |
| | Is the fuse ok?<br>**Yes**<br>REPAIR the circuit between ignition and the generator. TEST the system for normal operation.<br>**No**<br>GO to G10. |
| **G10: CHECK FUSE 15 OF THE PRIMARY JUNCTION FUSE BOX FOR A SHORT TO GROUND** | |
| | 1 Measure the resistance between electrical connector CA2 pin 1 (GO) and ground. |
| | Is the resistance less than 10,000 ohms?<br>**Yes**<br>REPAIR short to ground between the primary junction fuse box and the generator. INSTALL a new fuse. TEST the system for normal operation.<br>**No**<br>INSTALL a new fuse. TEST the system for normal operation. |
| **G11: CHECK THE GENERATOR 'L' TERMINAL WIRE FOR A SHORT TO GROUND** | |
| | 1 Measure the resistance between electrical connector PI47 pin 1 (YR) and ground. |
| | Is the resistance less than 10,000 ohms?<br>**Yes**<br>REPAIR the circuit between the electrical connector PI47 pin 1 (YR) and the ECM. Clear the DTC. TEST the system for normal operation.<br>**No**<br>GO to G12. |
| **G12: CHECK THE GENERATOR 'L' TERMINAL WIRE FOR A SHORT TO BATTERY** | |
| | 1 Measure the resistance between electrical connector PI47 pin 1 (YR) and battery positive |
| | Is the resistance less than 10,000 ohms?<br>**Yes**<br>REPAIR the circuit from the ECM to the generator. Clear the DTC. TEST the system for normal operation.<br>**No**<br>GO to G13. |
| **G13: CHECK THE CONTINUITY OF THE GENERATOR 'L' TERMINAL WIRE** | |
| | 1 Disconnect the battery ground cable. |
| | 2 Disconnect the ECM electrical connector PI1 and the generator electrical connector PI47 |
| | 3 Measure the resistance between PI1 pin 79 (YR) and PI47 pin 1 (YR). |

GETtheMANUALS.org

| | |
|---|---|
| | Is the resistance less than 5 ohms?<br>**Yes**<br>INSTALL a new generator. TEST the system for normal operation.If the DTC is repeated INSTALL a new ECM. For additional information REFER to Section 303-14A Electronic Engine Controls / 303-14B Electronic Engine Controls / 303-14C Electronic Engine Controls. or REFER to Section 303-14A Electronic Engine Controls / 303-14B Electronic Engine Controls / 303-14C Electronic Engine Controls.<br>**No**<br>REPAIR the circuit from the ECM to the generator. TEST the system for normal operation. |

| **PINPOINT TEST H : GENERATOR NOT CHARGING - BATTERY KEEPS GOING FLAT** | |
|---|---|
| **TEST CONDITIONS** | **DETAILS/RESULTS/ACTIONS** |
| **H1: CHECK THE CHARGE WARNING LAMP IS ILLUMINATED WITH THE ENGINE RUNNING** | |
| | 1 START and RUN the engine at idle in park. INSPECT the generator charge warning indicator lamp. |
| | Is the warning lamp illuminated?<br>**Yes**<br>GO to H2.<br>**No**<br>GO to H4. |
| **H2: CHECK THE BATTERY VOLTAGE WITH THE IGNITION OFF AND NO ELECTRICAL LOADS APPLIED** | |
| | 1 Measure the battery voltage. |
| | Is the voltage less than 12 volts?<br>**Yes**<br>Charge the battery.GO to H3.<br>**No**<br>GO to H4. |
| **H3: CHECK THE BATTERY** | |
| | 1 Carry out a battery condition test. |
| | Is the battery ok?<br>**Yes**<br>GO to H4. .<br>**No**<br>INSTALL a new battery. TEST the system for normal operation. |
| **H4: CHECK THE BATTERY VOLTAGE WITH THE ENGINE RUNNING AND NO ELECTRICAL LOADS APPLIED** | |
| | 1 START and RUN the engine at idle in park. Measure the battery voltage. |
| | Is the voltage less than 13 volts?<br>**Yes**<br>For vehicles fitted with manual transmission GO to H5. . For vehicles fitted with automatic transmission GO to H8. .<br>**No**<br>GO to H6. |
| **H5: CHECK THE GENERATOR DRIVE PULLEY (VEHICLES FITTED WITH MANUAL TRANSMISSION)** | |
| | 1 REMOVE the accessory drive belt. For additional information REFER to Section 303-05 Accessory Drive. |
| | 2 ROTATE the generator pulley by hand. |
| | Does the alternator rotor shaft rotate with the pulley?<br>**Yes**<br>GO to H8.<br>**No**<br>INSTALL a new generator. TEST the system for normal operation. |
| **H6: CHECK GENERATOR ELECTRICAL CONNECTOR FOR CORRECT FITMENT** | |
| | 1 Check the generator electrical connector PI 47 for correct connection. |
| | Is the generator electrical connector PI 47 correctly installed.<br>**Yes**<br>GO to H7.<br>**No**<br>Disconnect the electrical connector. INSTALL a new connector if required. CLEAR the DTC. TEST the system for normal operation. |
| **H7: CHECK THE ENGINE GROUND CABLE AT STARTER MOTOR FOR CORRECT FITMENT/DAMAGE** | |
| | 1 Check the engine ground cable. |
| | Is the engine ground cable fitted incorrectly or damaged.<br>**Yes**<br>GO to H8.<br>**No**<br>DISCONNECT the engine ground cable. CLEAN the contact points. If damaged INSTALL a new engine ground cable. CLEAR the DTC. TEST the system for normal operation. |
| **H8: CHECK THE GENERATOR OUTPUT VOLTAGE AT THE GENERATOR BATTERY POSITIVE CABLE TERMINAL, WITH THE ENGINE RUNNING AND NO ELECTRICAL LOADS APPLIED** | |
| | 1 START and RUN the engine at idle in park. Measure the voltage between the generator battery positive cable electrical connector ST7 (R) and generator casing. |
| | Is the voltage less than 13 volts?<br>**Yes**<br>GO to H9.<br>**No**<br>REPAIR the possitive battery cable circuit from the generator to the battery. TEST the system for normal operation. |
| **H9: CHECK FOR IGNITION VOLTAGE AT GENERATOR ELECTRICAL CONNECTOR** | |
| | 1 Turn the ignition switch to the on position. |
| | 2 Measure the voltage between generator electrical connector PI 47 pin 2 (GO) and generator casing. |
| | Is the voltage less than 10 volts<br>**Yes**<br>GO to H10.<br>**No**<br>INSTALL a new generator. CLEAR the DTC. TEST the system for normal operation. |
| **H10: CHECK FUSE 15 IN THE PRIMARY JUNCTION FUSE BOX** | |
| | 1 Check the fuse. |

GETtheMANUALS.org

| | |
|---|---|
| | Is the fuse ok?<br>**Yes**<br>GO to H12.<br>**No**<br>GO to H11. |
| **H11: CHECK FUSE 15 OF THE PRIMARY JUNCTION FUSE BOX FOR A SHORT TO GROUND** | |
| | 1 Measure the resistance between electrical connector CA2 pin 1 (GO) and ground. |
| | Is the resistance less than 10,000 ohms?<br>**Yes**<br>REPAIR short to ground between the primary junction fuse box and the generator. INSTALL a new fuse. TEST the system for normal operation.<br>**No**<br>INSTALL a new fuse. TEST the system for normal operation. |
| **H12: CHECK FOR IGNITION SUPPLY VOLTAGE TO FUSE 15 OF THE PRIMARY JUNCTION FUSE BOX** | |
| | 1 Turn the ignition to the RUN position. Measure the voltage between the primary junction fuse box electrical connector FC37 pin 2 (WG) and ground. |
| | Is the voltage less than 10 volts?<br>**Yes**<br>REPAIR the circuit between the ignition switch and the primary junction fuse box.<br>**No**<br>GO to H13. |
| **H13: CHECK FOR IGNITION SUPPLY VOLTAGE FROM FUSE 15 OF THE PRIMARY JUNCTION FUSE BOX** | |
| | 1 Turn the ignition to the RUN position. Measure the voltage between the primary junction fuse box electrical connector CA2 pin 1 (GO) and ground. |
| | Is the voltage less than 10 volts?<br>**Yes**<br>INSTALL new primary fuse box. TEST the system for normal operation.<br>**No**<br>INSTALL a new generator. CLEAR the DTC. TEST the system for normal operation. |

| **PINPOINT TEST I : GENERATOR NOISY** | |
|---|---|
| **TEST CONDITIONS** | **DETAILS/RESULTS/ACTIONS** |
| **I1: CHECK GENERATOR FOR SECURITY** | |
| | 1 INSPECT the generator fixings. |
| | Is the generator loose?<br>**Yes**<br>TIGHTEN the generator fixings.TEST the system for normal operation.<br>**No**<br>GO to H2. |
| **I2: CHECK THE ACCESSORY DRIVE BELT** | |
| | 1 REMOVE and INSPECT the accessory drive belt. For additional information REFER to Section 303-05 Accessory Drive. |
| | Is the accessory drive belt ok?<br>**Yes**<br>GO to H3.<br>**No**<br>INSTALL a new accessory drive belt. TEST the system for normal operation. |
| **I3: CHECK THE ACCESSORY DRIVE BELT TENSIONER** | |
| | 1 REMOVE and INSPECT the accessory drive belt tensioner. REFER to Section 303-05 Accessory Drive. |
| | Is the accessory drive belt tensioner ok?<br>**Yes**<br>GO to H4. .<br>**No**<br>INSTALL a new accessory drive belt tensioner. TEST the system for normal operation. |
| **I4: CHECK THE GENERATOR FOR MECHANICAL NOISE** | |
| | 1 ROTATE the generator pulley by hand. |
| | Does the generator rotor shaft rotate smoothly?<br>**Yes**<br>For vehicles fitted with manual transmission GO to H5. . For vehicles fitted with automatic transmission GO to H8. .<br>**No**<br>INSTALL a new generator. TEST the system for normal operation. |
| **I5: CHECK THE GENERATOR DRIVE PULLEY (VEHICLES FITTED WITH MANUAL TRANSMISSION)** | |
| | 1 ROTATE the generator pulley quickly by hand. |
| | Does the alternator rotor shaft rotate with the pulley?<br>**Yes**<br>GO to H8.<br>**No**<br>INSTALL a new generator. TEST the system for normal operation. |
| **I6: CHECK THE ACCESSORY DRIVE BELT IDLER PULLEYS** | |
| | 1 ROTATE the accessory drive belt idler pulleys by hand. |
| | Do the accessory drive belt idler pulleys rotate smoothly?<br>**Yes**<br>GO to H10.<br>**No**<br>INSTALL new accessory drive belt pulleys as necessary. TEST the system for normal operation. |
| **I7: CHECK THE GENERATOR FOR ELECTRICAL NOISE** | |
| | 1 INSTALL the accessory drive belt. |
| | 2 START and RUN the engine at 1500 RPM. APPLY a high electrical load to the battery. |
| | Is the noise only heard with the high electrical load applied?<br>**Yes**<br>GO to H11.<br>**No**<br>CHECK the air conditioning compressor. For additional information REFER to Section 412-03 Air Conditioning.<br>CHECK the power steering pump. For additional information |

GETTHEMANUALS.org

| | |
|---|---|
| | REFER to Section 211-02 Power Steering.<br>TEST the system for normal operation. |
| **I8: ELIMINATE THE GENERATOR AS THE CAUSE OF ELECTRICAL NOISE** | |
| | 1 REMOVE fuse 15 from the primary junction fuse box. |
| | 2 START and RUN the engine at 1500 RPM. |
| | Is the noise still present?<br>**Yes**<br>CHECK the air conditioning compressor. For additional information REFER to Section 412-03 Air Conditioning.<br>CHECK the power steering pump. For additional information REFER to Section 211-02 Power Steering.<br>TEST the system for normal operation.<br>**No**<br>INSTALL a new generator. TEST the system for normal operation. |

| **PINPOINT TEST J : RADIO INTERFERENCE** | |
|---|---|
| **TEST CONDITIONS** | **DETAILS/RESULTS/ACTIONS** |
| **J1: CHECK GENERATOR FOR CAUSE OF THE RADIO INTERFERENCE** | |
| | 1 START and RUN the engine at 1500 RPM. |
| | 2 TURN the radio to the ON position. |
| | Is the radio interference present?<br>**Yes**<br>GO to J3.<br>**No**<br>GO to J2. |
| **J2: CHECK GENERATOR FOR CAUSE OF THE RADIO INTERFERENCE WITH A HIGH ELECTRICAL LOAD APPLIED TO THE BATTERY** | |
| | 1 START and RUN the engine at 1500 RPM. |
| | 2 APPLY a high electrical load to the battery. |
| | 3 TURN the radio switch to the ON position. |
| | Is the radio interference present?<br>**Yes**<br>GO to J3.<br>**No**<br>Diagnose the entertainment system. For additional information REFER to Section 415-00 Information and Entertainment System - General Information. |
| **J3: ELIMINATE THE GENERATOR AS THE CAUSE OF RADIATOR INTERFERENCE** | |
| | 1 REMOVE fuse 15 from the primary junction fuse box. |
| | 2 START and RUN the engine at 1500 RPM. |
| | 3 TURN the radio switch to the ON position. |
| | Is the radio interference present?<br>**Yes**<br>Diagnose the entertainment system. For additional information REFER to Section 415-00 Information and Entertainment System - General Information.<br>**No**<br>CLEAN and TIGHTEN all mounting points, positive and negative cable connections INSTALL fuse 15 from the primary junction fuse box. TEST the system for normal operation. If interference is still present, INSTALL a new generator. |

## Base Voltage Test

• NOTE: Prior to running this test, turn the headlamps on for 30 seconds to remove any surface charge from the battery. Wait until the voltage stabilizes before carrying out the base voltage test.

1. **1.** With the ignition switched off and no electrical loads switched on, connect the negative lead of a digital multimeter to the battery negative cable clamp.
2. **2.** Connect the positive lead of the digital multimeter to the battery positive terminal cable clamp.
3. **3.** Read and record the battery voltage shown on the digital multimeter. This is called base voltage and will be used in later tests.

## No-Load Test

1. **1.** Connect the Digital Multimeter leads across the battery terminals.
2. **2.** Read the voltage (base voltage) if battery voltage is less than 12.5 volts. recharge battery before test.
3. **3.** Start the engine.
4. **4.** Run the engine to 1500 RPM with no electrical load.
5. **5.** Read the voltage. If the voltage increase is less than 0.5 volts over the base voltage, carry out the following Load Test. If there is no voltage increase, carry out the on-vehicle charging system test.

## Battery Condition Test

• WARNINGS:

Batteries contain sulphuric acid and explosive mixtures of hydrogen and oxygen gases; protective clothing should be worn to avoid the risk of personal injury.

Avoid sparks and all sources of ignition when working on the battery.

• CAUTIONS:

Do not carry out this test if the battery voltage is below 12.5 volts.

GETtheMANUALS.org

Do not carry out this test for longer than 15 seconds or damage to the battery may occur.

• NOTE: Make sure that the high rate discharge is capable of applying a load of 300 Amps to the battery.

1. **1.** Connect the high rate discharge tester to the battery.
2. **2.** Observe and record the voltage reading of the battery.
3. **3.** Turn the switch ON for 15 seconds.
4. **4.** Observe and record the minimum voltage reading of the battery.
5. **5.** Turn the switch to the off position.
6. **6.** Observe the voltage reading of the battery.

The battery voltage should not fall below 9.6 volts at a temperature of 21 degrees centigrade (seventy degrees fahrenheit) when carrying out the test.

The battery should recover to the voltage when the test is complete.

GETtheMANUALS.org

Published: 11-May-2011

# Battery and Charging System - General Information - Charging System2.7L V6 - TdV6

Diagnosis and Testing

## Overview

There are changes to diagnostics for 2006 my, the most obvious of which will be the change to 7-digit diagnostic trouble codes (DTCs) from the familiar 5-digit.

Refer to the DTC index in this section for guidance on how to use these codes with the Jaguar approved diagnostic system or a scan tool.

For information on the operation of the system,
REFER to: Charging System (414-00 Battery and Charging System - General Information, Description and Operation).

## Inspection and Verification

1. **1.** Verify the customer concern.
2. **2.** Visually inspect for obvious signs of mechanical and electrical damage.

| Mechanical | Electrical |
|---|---|
| • Generator<br>• Front end accessory drive (FEAD) belt condition and tension<br>• Accessory drive belt tensioner<br>• Generator pulley<br>• Generator fittings/connections | • Generator<br>• Battery<br>• Starter motor<br>• Harnesses and connectors<br>• Fuse 30, rear power distribution box<br>• Starter motor megafuse<br>• Charge warning light function<br>• Controller area network (CAN) circuit fault<br>• Engine control module (ECM) |

3. **3.** Check the vehicle battery condition and state of charge before condemning any charging system components. For additional information, refer to the battery care manual.
4. **4.** If an obvious cause for an observed or reported concern is found, correct the cause (if possible) before proceeding to the next step.
5. **5.** If the cause is not visually evident use the Jaguar approved diagnostic system or a scan tool to retrieve the fault codes before proceeding to the DTC index, or the symptom chart if no DTCs are set.

## Symptom chart

| Symptom | Possible cause | Action |
|---|---|---|
| Charge warning light does not come on | • Bulb/Circuit fault<br>• Generator fault<br>• CAN circuit fault<br>• ECM fault | Check the warning light function with the ignition on and the engine off. Replace bulbs or repair the circuit(s) as necessary. Check for DTCs indicating a generator, CAN or ECM fault. |
| Charge warning light stays on/battery discharges | • Accessory drive belt broken<br>• Generator pulley slipping on shaft<br>• Generator fault<br>• Battery cable fault<br>• CAN circuit fault<br>• ECM fault | Check fuse 30 of the rear power distribution box. GO to Pinpoint Test D. Check the battery and generator cables. GO to Pinpoint Test C. Check for DTCs indicating a generator fault. Check the accessory drive belt condition and tension (see visual inspection chart). Check that the pulley does not rotate independently of the generator. Check for DTCs indicating a CAN or ECM fault. |
| Charge warning light intermittent | • Accessory drive belt slipping<br>• Battery cable fault<br>• Generator wiring fault<br>• Generator fault<br>• CAN circuit fault | Check the accessory drive belt condition and tension (see visual inspection chart). Check the battery and generator cables. GO to Pinpoint Test C. Check for DTCs indicating a generator or CAN circuit fault. Note that the use of a power pack or boost charger may bring the warning light on until disconnected. |
| Battery discharges without the charge warning light staying on | • Battery fault<br>• Battery quiescent drain<br>• Intermittent generator fault | Check the battery condition, check for battery drain. Refer to the battery care manual. Check for DTCs indicating a generator fault. It is possible for the altcom circuit to short circuit to ground without setting a DTC. If no other reason for discharge can be found, check this circuit. GO to Pinpoint Test A. |
| Noise (mechanical) | • Accessory drive belt slipping<br>• Generator fault | Check the accessory drive belt condition and tension (see visual inspection chart). Disconnect the accessory drive belt and check that the generator rotates freely. For additional information.<br>REFER to: Accessory Drive Belt - 2.7L V6 - TdV6 (303-05 Accessory Drive, Removal and Installation). |

## DTC index

• NOTE: Generic scan tools may not read the codes listed, or may read only 5-digit codes. Match the 5 digits from the scan tool to the first 5 digits of the 7-digit code listed to identify the fault (the last 2 digits give extra information read by the manufacturer-approved diagnostic system).

• NOTE: For a full list of powertrain DTCs,
REFER to: Electronic Engine Controls (303-14C Electronic Engine Controls - 2.7L V6 - TdV6, Diagnosis and Testing).

GETtheMANUALS.org

| DTC | Description | Possible causes | Action |
|---|---|---|---|

| DTC | Description | Possible causes | Action |
|---|---|---|---|
| P062200 | Generator monitor circuit plausibility | • PWM signal incorrect | For generator monitor circuit tests, GO to Pinpoint Test A. |
| P062500 | Generator monitor circuit fault | • Voltage sense circuit: high resistance<br>• Generator B+ circuit: high resistance/intermittent<br>• Generator monitor circuit: short circuit to ground | Check fuse 30 of the rear power distribution box. GO to Pinpoint Test D. Carry out the battery cable volt drop tests. GO to Pinpoint Test C. For generator monitor circuit tests. GO to Pinpoint Test A. |
| P062600 | Generator monitor circuit fault | • Generator connector: loose/not connected<br>• Generator monitor circuit: short circuit to power<br>• Generator monitor circuit: high resistance | Carry out the battery cable volt drop tests. GO to Pinpoint Test C. For generator monitor circuit tests. GO to Pinpoint Test A. |
| P065B00 | Generator command circuit fault | • Generator command circuit: short circuit to ground<br>• Generator command circuit: short circuit to power<br>• Generator command circuit: high resistance | For generator command circuit tests. GO to Pinpoint Test B. |

## Pinpoint tests

CAUTION: When probing connectors to take measurements in the course of the pinpoint tests, use the adaptor kit, part number 3548-1358-00. Failure to follow this instruction may result in damage to the vehicle.

• NOTE: When performing voltage or resistance tests, always use a digital multimeter (DMM) accurate to 3 decimal places, and with an up-to-date calibration certificate. When testing resistance, always take the resistance of the DMM leads into account.

• NOTE: Check and rectify basic faults before beginning diagnostic routines involving pinpoint tests.

• NOTE: If DTCs are recorded and a fault is not present when performing the pinpoint tests, an intermittent concern may be the cause. Always check for loose connections and corroded terminals.

### PINPOINT TEST A : GENERATOR MONITOR CIRCUIT

| TEST CONDITIONS | DETAILS/RESULTS/ACTIONS |
|---|---|
| **A1: CHECK THE MONITOR CIRCUIT FOR SHORT CIRCUIT TO GROUND** | |
| 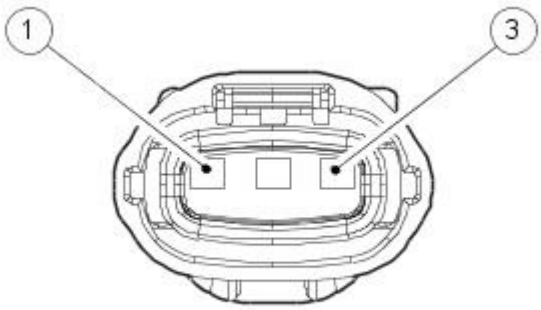 <br>E66145 | **Generator, C073**<br>Circuit: Voltage sense circuit — Pin: 01<br>Circuit: Altcom — Pin: 02<br>Circuit: Altmon — Pin: 03 |
| 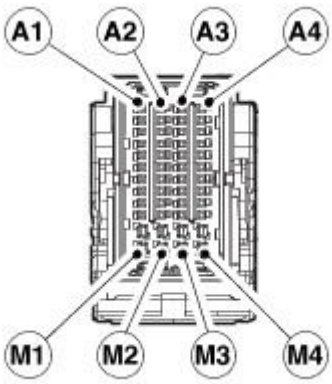 <br>E66146 | **ECM, C101**<br>Circuit: Altmon — Pin: F2 |
| | 1 Key off.<br>2 Disconnect the generator connector, C073.<br>3 Key on, engine off.<br>4 Measure the resistance between:<br>C073, harness side: Pin 03 — Battery: Negative terminal |
| | Is the resistance greater than 10 Kohms?<br>**Yes**<br>GO to A3.<br>**No**<br>GO to A2. |
| **A2: CHECK WHETHER THE SHORT CIRCUIT IS IN THE HARNESS OR THE MODULE** | |

GETtheMANUALS.org

1 Key off.
2 Disconnect the ECM connector, C101.
3 Key on, engine off.
4 Measure the resistance between:

| C073, harness side | Battery |
|---|---|
| Pin 03 | Negative terminal |

Is the resistance greater than 10 Kohms?

**Yes**
An intermittent fault may be present in the wiring harness. Visually check for chaffed wires or other physical damage to the harness. Refer to the warranty policy and procedures manual if a module is suspect.

**No**
REPAIR the short circuit. For additional information, refer to the wiring diagrams. Clear the DTC, test the system for normal operation.

**A3: CHECK THE MONITOR CIRCUIT FOR SHORT CIRCUIT TO POWER**

1 Measure the resistance between:

| C073, harness side | Battery |
|---|---|
| Pin 03 | Positive terminal |

Is the resistance greater than 10 Kohms?

**Yes**
GO to A5.

**No**
GO to A4.

**A4: CHECK WHETHER THE SHORT CIRCUIT IS IN THE HARNESS OR THE MODULE**

1 Key off.
2 Disconnect the ECM connector, C101
3 Key on, engine off.
4 Measure the resistance between:

| C073, harness side | Battery |
|---|---|
| Pin 03 | Negative terminal |

Is the resistance greater than 10 Kohms?

**Yes**
An intermittent fault may be present in the wiring harness. Visually check for chaffed wires or other physical damage to the harness. Refer to the warranty policy and procedures manual if a module is suspect.

**No**
REPAIR the short circuit. For additional information, refer to the wiring diagrams. Clear the DTC, test the system for normal operation.

**A5: CHECK THE MONITOR CIRCUIT FOR HIGH RESISTANCE**

1 Key off.
2 Disconnect the ECM connector, C101
3 Key on, engine off.
4 Measure the resistance between:

| C073, harness side | C101, harness side |
|---|---|
| Pin 03 | Pin F2 |

Is the resistance less than 10 ohms?

**Yes**
An intermittent fault may be present in the wiring harness. Visually check for chaffed wires or other physical damage to the harness.

**No**
REPAIR the high resistance circuit. For additional information, refer to the wiring diagrams. Clear the DTC, test the system for normal operation.

## PINPOINT TEST B : GENERATOR COMMAND CIRCUIT

| TEST CONDITIONS | DETAILS/RESULTS/ACTIONS |
|---|---|

**B1: CHECK THE COMMAND CIRCUIT FOR SHORT CIRCUIT TO GROUND**

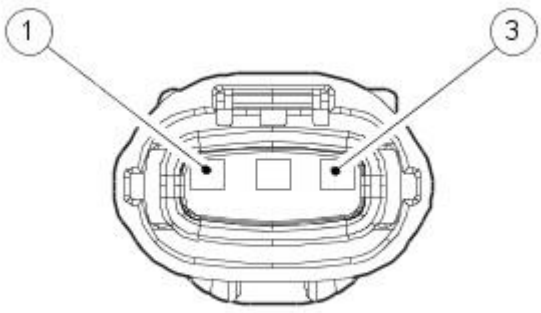

E66145

**Generator, C073**

| Circuit | Pin |
|---|---|
| Voltage sense circuit | 01 |
| Altcom | 02 |
| Altmon | 03 |

GETtheMANUALS.org

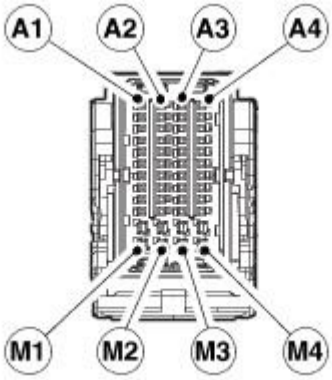

E66146

**ECM, C101**

| Circuit | Pin |
|---|---|
| Altcom | H1 |

1. Key off.
2. Disconnect the generator connector, C073.
3. Key on, engine off.
4. Measure the resistance between:

| C073, harness side | Battery |
|---|---|
| Pin 02 | Negative terminal |

Is the resistance greater than 10 Kohms?

**Yes**
GO to B3.

**No**
GO to B2.

**B2: CHECK WHETHER THE SHORT CIRCUIT IS IN THE HARNESS OR THE MODULE**

1. Key off.
2. Disconnect the ECM connector, C101.
3. Key on, engine off.
4. Measure the resistance between:

| C073, harness side | Battery |
|---|---|
| Pin 02 | Negative terminal |

Is the resistance greater than 10 Kohms?

**Yes**
An intermittent fault may be present in the wiring harness. Visually check for chaffed wires or other physical damage to the harness. Refer to the warranty policy and procedures manual if a module is suspect.

**No**
REPAIR the short circuit. For additional information, refer to the wiring diagrams. Clear the DTC, test the system for normal operation.

**B3: CHECK THE COMMAND CIRCUIT FOR SHORT CIRCUIT TO POWER**

1. Measure the resistance between:

| C073, harness side | Battery |
|---|---|
| Pin 02 | Positive terminal |

Is the resistance greater than 10 Kohms?

**Yes**
GO to B5.

**No**
GO to B4.

**B4: CHECK WHETHER THE SHORT CIRCUIT IS IN THE HARNESS OR THE MODULE**

1. Key off.
2. Disconnect the ECM connector, C101
3. Key on, engine off.
4. Measure the resistance between:

| C073, harness side | Battery |
|---|---|
| Pin 02 | Positive terminal |

Is the resistance greater than 10 Kohms?

**Yes**
An intermittent fault may be present in the wiring harness. Visually check for chaffed wires or other physical damage to the harness. Refer to the warranty policy and procedures manual if a module is suspect.

**No**
REPAIR the short circuit. For additional information, refer to the wiring diagrams. Clear the DTC, test the system for normal operation.

**B5: CHECK THE COMMAND CIRCUIT FOR HIGH RESISTANCE**

1. Key off.
2. Disconnect the ECM connector, C101
3. Key on, engine off.
4. Measure the resistance between:

| C073, harness side | C101, harness side |
|---|---|
| Pin 02 | Pin H1 |

Is the resistance less than 10 ohms?

**Yes**
An intermittent fault may be present in the wiring harness. Visually check for chaffed wires or other physical damage to the harness.

**No**
REPAIR the high resistance circuit. For additional information, refer to the wiring diagrams. Clear the DTC, test the system for normal operation.

**PINPOINT TEST C : BATTERY CABLE VOLT DROP**

GETtheMANUALS.org

- NOTE: Check the megafuses before carrying out volt drop tests.
- NOTE: Check the security of the engine and battery grounds before carrying out volt drop tests.

• NOTE: Check that the battery is in good condition and well-charged.
REFER to: Battery Charging (414-00 Battery and Charging System - General Information, General Procedures).

| TEST CONDITIONS | DETAILS/RESULTS/ACTIONS |
|---|---|
| **C1: CHECK FOR GENERATOR OUTPUT** | |
| | 1 Key off. |
| | 2 Measure and record the voltage between: |

| Battery | Battery |
|---|---|
| Positive terminal | Negative terminal |

| | |
|---|---|
| | 3 Key on, engine running.<br>• Allow to idle |
| | 4 Switch off all electrical loads, including heater blowers. |
| | 5 Measure and record the voltage between: |

| Battery | Battery |
|---|---|
| Positive terminal | Negative terminal |

| | |
|---|---|
| | Is the voltage greater than in step 2?<br>**Yes**<br>GO to C2.<br>**No**<br>CHECK the connections at either end of the circuit for cleanliness and security. Check for high resistance in the circuit. Clean or replace as necessary. Check that the generator is charging. Test the system for normal operation. |
| **C2: CHECK FOR VOLT DROP BETWEEN THE BATTERY AND THE GENERATOR** | |
| | 1 Switch on all lights, select maximum heater blower speed, and turn on the rear heated screen. |
| | 2 Measure the voltage between: |

| Generator | Battery |
|---|---|
| Connector, ST07 | Positive terminal |

| | |
|---|---|
| | Is the voltage less than 0.5 volts?<br>**Yes**<br>An intermittent fault may be present in the wiring harness. Visually check for chaffed wires or other physical damage to the harness. Check for DTCs indicating another cause of the concern.<br>**No**<br>CHECK the connections at either end of the circuit for cleanliness and security. Check for high resistance in the circuit. Clean or replace as necessary. Test the system for normal operation. |

## PINPOINT TEST D : GENERATOR VOLTAGE SENSE CIRCUIT

• NOTE: Check fuse 30 of the rear power distribution box before beginning this test.

| TEST CONDITIONS | DETAILS/RESULTS/ACTIONS |
|---|---|
| **D1: CHECK THE VOLTAGE AT THE GENERATOR SENSE CIRCUIT** | |

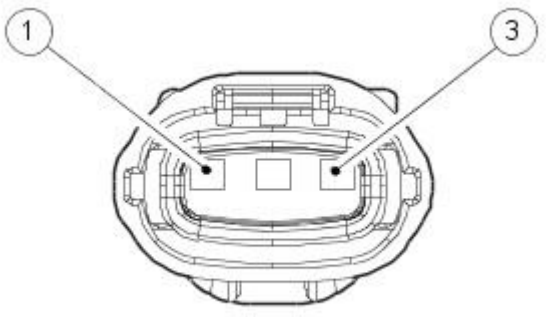

E66145

**Generator, C073**

| Circuit | Pin |
|---|---|
| Voltage sense circuit | 01 |
| Altcom | 02 |
| Altmon | 03 |

| | |
|---|---|
| | 1 Key off. |
| | 2 Disconnect the generator connector, C073. |
| | 3 Measure the voltage between: |

| C073, harness side | Battery |
|---|---|
| Pin 01 | Negative terminal |

| | |
|---|---|
| | Is the voltage greater than 10 volts?<br>**Yes**<br>Voltage sense circuit is correct. GO to Pinpoint Test C.<br>**No**<br>GO to D2. |
| **D2: CHECK THE VOLTAGE AT THE REAR POWER DISTRIBUTION BOX** | |
| | 1 Key off. |
| | 2 Remove fuse 30 of the rear power distribution box. |
| | 3 Measure the voltage between: |

| Rear power distribution box | Battery |
|---|---|
| Fuse 30, input pin | Negative terminal |

| | |
|---|---|
| | Is the voltage greater than 10 volts?<br>**Yes**<br>GO to D3.<br>**No**<br>REPAIR the power supply circuit to the rear power distribution box. For additional information, refer to the wiring diagrams. Clear the DTC, test the system for normal operation. |
| **D3: CHECK THE VOLTAGE SENSE CIRCUIT FOR HIGH RESISTANCE** | |
| | 1 Measure the resistance between: |

| C073, harness side | Rear power distribution box |
|---|---|
| Pin 01 | Fuse 30, output pin |

GETtheMANUALS.org

| | |
|---|---|
| | Is the resistance less than 10 ohms?<br>**Yes**<br>RECHECK the fuse. An intermittent fault may be present in the wiring harness. Visually check for chaffed wires or other physical damage to the harness.<br>**No**<br>REPAIR the high resistance circuit. For additional information, refer to the wiring diagrams. Clear the DTC, test the system for normal operation. |

GETtheMANUALS.org

# Battery and Charging System - General Information - Battery Charging

General Procedures

1. Before charging a discharged battery inspect and repair the following conditions, if necessary:
   - Loose accessory drive belt.
   - Pinched or grounded wiring harness to the generator or voltage regulator.
   - Loose wiring harness connections at the generator or voltage regulator.
   - Loose or corroded connections at battery, headlamp panel junction wire or engine ground.
   - Carry out generator charging checks.
   - Excessive battery quiescent drain due to:
     1. engine compartment, load space, glove compartment and courtesy lamps remaining on (switch damaged or out of adjustment, glove compartment left open).

## Battery Charging - Maintenance-Free Batteries

• WARNINGS:

KEEP BATTERIES OUT OF REACH OF CHILDREN. BATTERIES CONTAIN SULPHURIC ACID, AVOID CONTACT WITH SKIN, EYES OR CLOTHING. SHIELD YOUR EYES WHEN WORKING NEAR THE BATTERY TO PROTECT AGAINST POSSIBLE SPLASHING OF THE ACID SOLUTION. IN CASE OF ACID CONTACT WITH SKIN OR EYES, FLUSH IMMEDIATELY WITH WATER FOR A MINIMUM OF 15 MINUTES AND SEEK PROMPT MEDICAL ATTENTION. IF ACID IS SWALLOWED, CALL A PHYSICIAN IMMEDIATELY. FAILURE TO FOLLOW THESE INSTRUCTIONS MAY RESULT IN PERSONAL INJURY.

BATTERIES NORMALLY PRODUCE EXPLOSIVE GASES WHICH CAN CAUSE PERSONAL INJURY, THEREFORE DO NOT ALLOW FLAMES, SPARKS, OR LIGHTED SUBSTANCES TO COME NEAR THE BATTERY. WHEN CHARGING OR WORKING NEAR A BATTERY ALWAYS SHIELD YOUR FACE AND PROTECT YOUR EYES . ALWAYS PROVIDE ADEQUATE VENTILATION. FAILURE TO FOLLOW THESE INSTRUCTIONS MAY RESULT IN PERSONAL INJURY.

1. Cold batteries will not readily accept a charge. Therefore, batteries should be allowed to warm up approximately to 15 degrees centigrade (59 degrees Fahrenheit) before charging. This may require 12 hours at room temperature depending on the initial temperature and battery size.
2. A battery which has been completely discharged may be slow to accept a charge initially, and in some cases may not accept a charge at the normal charger setting. When batteries are in this condition, charging can be started by use of the 'dead battery' switch which is fitted to certain types of battery chargers. Follow the manufacturer's instructions when carrying out this procedure.
3. To determine whether a battery is accepting a charge, follow the manufacturer's instructions for the charger.
4. After releasing dead battery switch and with the charger still operating, measure battery voltage. If the voltage is 12 volts or higher, the battery may be accepting a charge and may be capable of being recharged. If the temperature of the battery is below 15 degrees centigrade (59 degrees Fahrenheit) the battery may require charging for up to two hours before the charge rate is high enough to show on the charger ammeter. It has been found that all un-damaged batteries can be charged by this procedure. If a battery cannot be charged by this procedure, it should be replaced.
5. A rapid recharge procedure has been developed for recharging batteries that have passed the 'No-Load Test' and only need a recharge. This can be due to non start battery failures or battery discharged in vehicle due to key-off loads.
6. The battery can be rapidly recharged by using either of the following methods:
   1. Perform a two hour charge using a constant current of 20 amps (manual setting on the charger).
   2. Perform a two hour charge using a constant voltage (automatic setting on the charger).

## Quiescent Current Measurement

1. NOTE: The following quiescent current measurement does not apply to vehicles fitted with the Tracker system. If the vehicle is fitted with the tracker system the quiescent current may be up to 14 milliamps higher. If non-jaguar approved accessories are installed the following measurements may not apply.

GETtheMANUALS.org

Disconnect the battery ground cable.
For additional information, refer to Section 414-01 Battery, Mounting and Cables.

2. Check the vehicle off-load battery voltage. If below 12.5 volts, install a fully charged slave battery for the tests and recharge the vehicle battery.
3. Connect a suitable ammeter to the battery with the negative test lead clip to the negative battery terminal, and the positive test lead clip to the battery negative lead.
4. NOTE: Make sure that all electrical accessories are switched off.

   Operate the key fob unlock button to disarm the vehicle security system.

   - Switch the ignition to the RUN position for a 10 second duration.
     1. Switch the ignition to the OFF position. Remove the key.
   - Close the vehicle doors and luggage compartment lid.

5. Monitor the ammeter reading for 30 minutes.
6. After 30 minutes the quiescent current reading should be no greater than 30 milliamps.
7. Disconnect the ammeter. Reconnect the battery ground cable.
   For additional information, refer to Section 414-01 Battery, Mounting and Cables.

GETtheMANUALS.org

# Battery, Mounting and Cables -

**Battery Specification**

| Engine Specification | Vehicle Specification | | | Rest of World |
|---|---|---|---|---|
| | | Europe | | |
| | Vehicles fitted without electrical optional extras. | Vehicles fitted with electrical optional extras. | | |
| Vehicles fitted with 2.5L engine | 80 Ah | 90 Ah | 90 Ah | |
| Vehicles fitted with 2.7L Diesel engine | 95 Ah | 95 Ah | 95 Ah | |
| Vehicles fitted with 3.0L engine | 90 Ah | 90 Ah | 90 Ah | |
| Vehicles fitted with 4.2L engine | 90 Ah | 90 Ah | 90 Ah | |

**Battery Cold Cranking Specification**

| Item | Specification |
|---|---|
| 95 Ah Battery Cold Cranking | 800 Amps |
| 90 Ah Battery Cold Cranking | 680 Amps |
| 80 Ah Battery Cold Cranking | 640 Amps |

**Torque Specifications**

| Description | Nm | lb-ft | lb-in |
|---|---|---|---|
| Battery positive cable to rear junction box retaining nut. | 12 | 9 | - |
| Battery positive cable front terminal retaining nut. | 12 | 9 | - |
| Battery ground cable to body retaining bolt. | 12 | 9 | - |
| Battery tray. | 10 | - | 89 |
| Battery cable terminal . | 4 | - | 35 |

GETtheMANUALS.org

# Battery, Mounting and Cables - Battery and Cables

Description and Operation

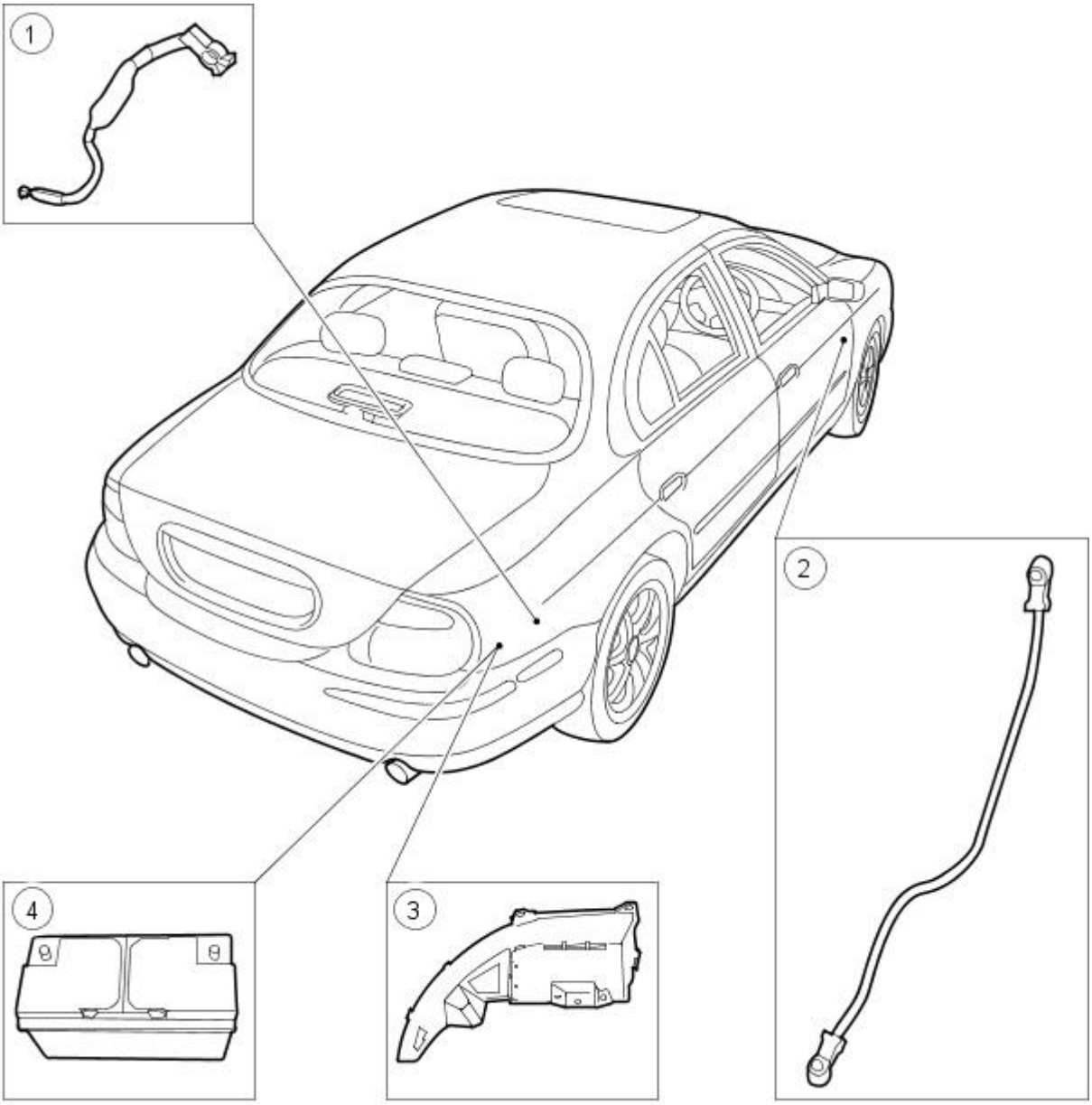


E30504

| Item | Part Number | Description |
|---|---|---|
| 1 | — | Battery negative cable |
| 2 | — | Battery positive cable |
| 3 | — | Battery tray |
| 4 | — | Battery |

The battery fitted is a 12 volts (DC) high cold cranking amperage type.

The battery cables consist of heavy duty negative and positive cables. They are bolted to the battery clamp distributor poles which are of dissimilar size to avoid reverse connection.

Vehicles built from 02/2004

The battery positive cable is routed externally along the right-hand side of the vehicle and is protected by the floor undertray and a jacking shield at the right-hand side rear jacking point.

Care must be taken when jacking and lifting the vehicle on the right-hand side.

GETtheMANUALS.org

Published: 11-May-2011

# Battery, Mounting and Cables - Battery

Diagnosis and Testing

For additional information,
REFER to Section 414-00 Battery and Charging System - General Information.

GETtheMANUALS.org

# Battery, Mounting and Cables - Battery Connect

General Procedures

• WARNINGS:

Batteries produce explosive gases which may cause personal injury. Do not expose the battery to a naked flame. When charging or working near a battery wear protective clothing and eye protectors. Always provide adequate ventilation. Failure to follow these instructions may result in personal injury.

Batteries contain sulphuric acid, avoid contact with skin, eyes and clothing. Shield your eyes when working near the battery to protect against possible contact of the acid solution. In case of contact with the skin or eyes, flush immediately for a minimum of 15 minutes and seek prompt medical attention. if swallowed call a physician immediately. Failure to follow these instructions may result in personal injury.

CAUTION: Make sure all electrical systems are off before connecting the battery negative cable. Failure to follow these instructions may result in damage to the electrical system.

• NOTE: Following reconnection of the battery, the engine should be allowed to idle as the stored idle and drive values contained within the engine control module (ECM) have been lost. This may cause driveablity concern if the following procedure is not carried out.

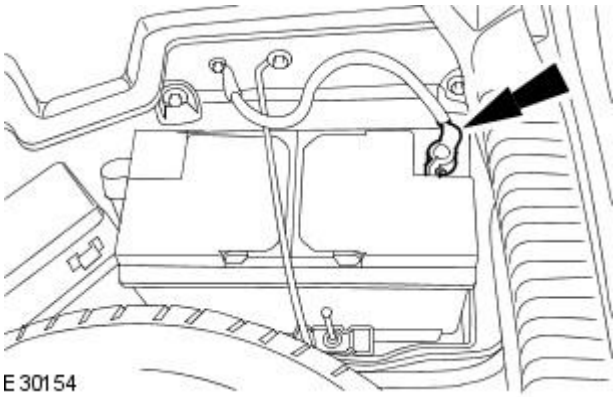


1. Connect the battery negative cable.
   - Tighten to 4 Nm.
2. Start the engine and allow to idle until the engine reaches normal operating temperature.
3. Switch the engine off.
4. Restart the engine and allow to idle for approximately two minutes (this will allow the ECM to learn the idle values).
5. Apply and hold the brake pedal, select drive and allow the engine to idle for a further two minutes.
6. Drive the vehicle for approximately five miles/eight kilometers of varied driving to enable the ECM to complete it's learning strategy.
7. Reset the audio unit and climate control assembly to original settings to avoid customer complaint.

GETtheMANUALS.org

# Battery, Mounting and Cables - Battery Disconnect and Connect

General Procedures

• WARNINGS:

Batteries produce explosive gases which may cause personal injury. Do not expose the battery to a naked flame. When charging or working near a battery wear protective clothing and eye protectors. Always provide adequate ventilation. Failure to follow these instructions may result in personal injury.

Batteries contain sulphuric acid, avoid contact with skin, eyes and clothing. Shield your eyes when working near the battery to protect against possible contact of the acid solution. In case of contact with the skin or eyes, flush immediately for a minimum of fifteen minutes and seek prompt medical attention. if swallowed call a physician immediately. Failure to follow these instructions may result in personal injury.

Audio unit key code saving devices must not be used when working on supplementary restraint systems or fuel systems. When using these devices the vehicle electrical system is still live but with a reduced current flow. Failure to follow this instruction may result in personal injury.

The backup power supply energy must be depleted before any supplementary restraint system repairs are carried out. To deplete the backup supply energy , first disconnect the battery negative cable, then disconnect the battery positive cable and wait one minute to avoid accidental deployment and personal injury. Failure to follow this instruction may result in personal injury.

CAUTION: Make sure the engine is not running before disconnecting the battery negative cable to avoid damage to the electrical system.

• NOTE: Before disconnecting the battery make sure that no data is required from the engine control module (ECM), as battery cable disconnection will erase any fault codes and idle/drive values held in the keep alive memory (KAM). It is not necessary to disconnect or remove electronic control modules.

• NOTE: When the battery is disconnected all previous climate control assembly settings and fault codes will be lost. It is necessary to record any settings or fault codes before battery disconnection to prevent customer complaint.

• NOTE: This procedure should be used to disconnect the battery while carrying out repairs that refer to the battery being disconnected

**1.** Obtain and record the audio unit keycode and preset radio frequencies.

**2.** Reposition the luggage compartment floor covering.

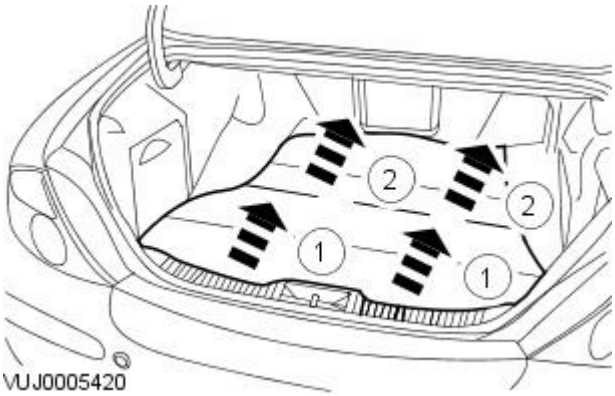


**3.** Disconnect the battery ground cable.

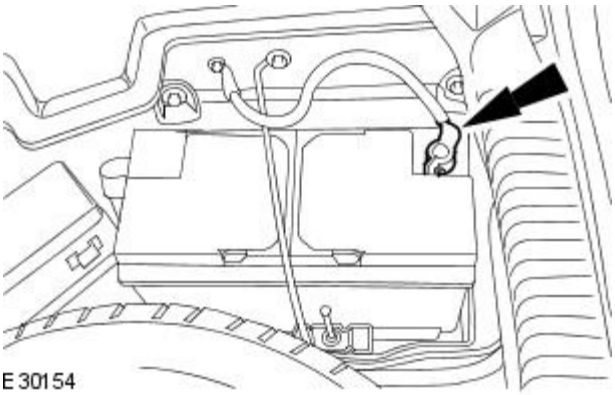


GETtheMANUALS.org

# Battery, Mounting and Cables - Battery

Removal and Installation

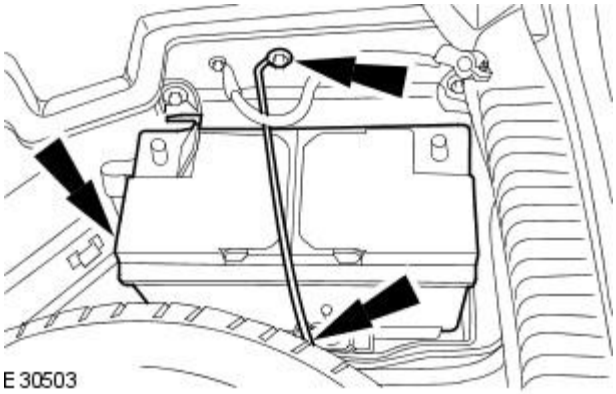


1. Disconnect the battery ground cable.
   For additional information, refer to Battery Disconnect in this section.
2. Disconnect the battery positive cable.
3. Remove the battery.
   - Remove the battery retaining bracket.
   - Detach the battery vent tube
   - Remove the battery.

## Installation

1. To install, reverse the removal procedure.

GETtheMANUALS.org

# Battery, Mounting and Cables - Battery Ground Cable

Removal and Installation

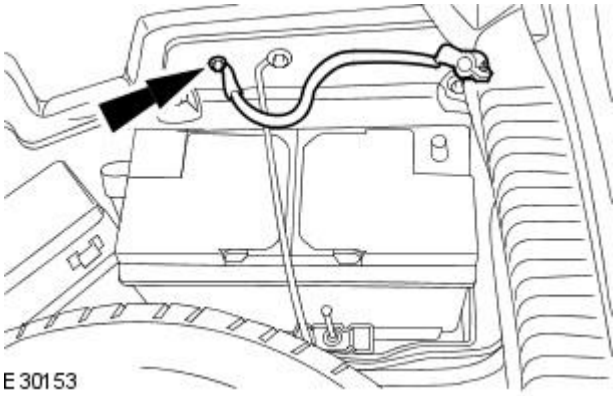


1. Disconnect the battery ground cable.
   For additional information, refer to Battery Disconnect in this section.
2. Remove the battery ground cable.

## Installation

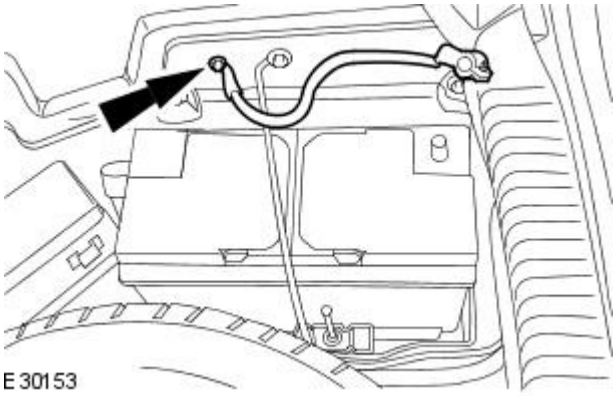


1. Tighten to 12 Nm.
2. Connect the battery ground cable.
   For additional information, refer to Battery Connect in this section.

GETtheMANUALS.org

# Battery, Mounting and Cables - Battery Tray

Removal and Installation

## Removal

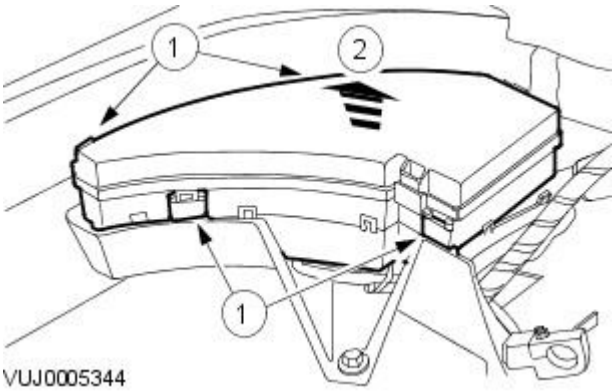


1. Remove the battery. For additional information, refer to Battery in this section.
2. Remove the spare wheel and tire.
3. Detach the power distribution box.
    1. Detach the power distribution box retaining tangs.
    2. Detach the power distribution box.

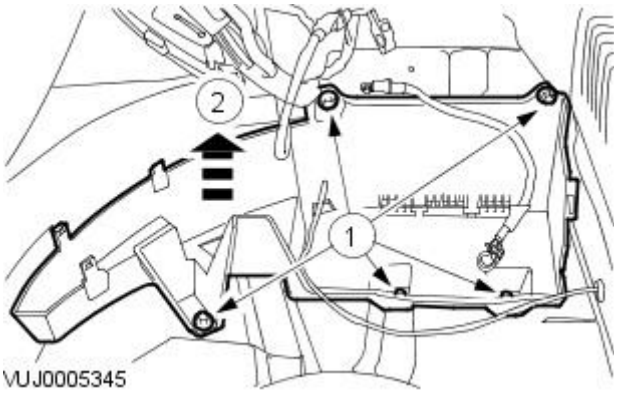


4. Remove the battery tray.
    1. Remove the battery tray retaining bolts.
    2. Remove the battery tray.

## Installation

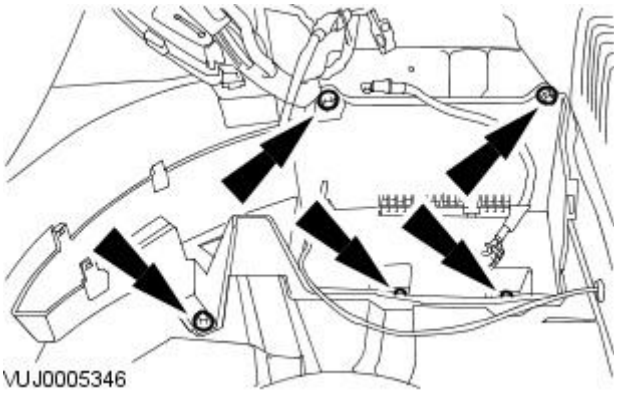


1. To install, reverse the removal procedure.
    1. Tighten to 10 Nm.

GETtheMANUALS.org

# Generator and Regulator -

**Torque Specifications**

| Description | Nm | lb-ft | lb-in |
|---|---|---|---|
| Generator retaining bolts - vehicles fitted with 2.5L or 3.0L engine | 48 | 35 | - |
| Generator retaining bolts - vehicles fitted with 2.7L Diesel engine | 47 | 35 | - |
| Generator upper retaining bolt - vehicles fitted with 4.2L engine | 21 | 15 | - |
| Generator lower retaining bolt - vehicles fitted with 4.2L engine | 40 | 30 | - |
| Battery positive cable retaining nut | 12 | 9 | - |

GETtheMANUALS.org

# Generator and Regulator - Generator

Description and Operation

The charging system for vehicles fitted with 2.5L or 3.0L engines consist of a 120 amp output, L3B, generator and regulator assembly. Vehicles fitted with 2.7L Diesel engines consist of a 150 amp output, SC2, generator and regulator assembly. Vehicles fitted with 4.2L engines consist of a 130 amp output, SC1, generator and regulator assembly. The generator and regulator assembly generates electrical power to the vehicle electrical system with electricity when the engine is running and maintain the battery in a charged state.

The generator is belt driven by the accessory drive belt.
For additional information, refer to: Accessory Drive (303-05 Accessory Drive, Description and Operation).
When the engine is started, the generator begins to generate alternating current (AC) which is converted to direct current (DC) internally. The DC current and voltage is controlled by the voltage regulator, (located inside the generator ) and then supplied to the battery through the main battery positive cable.

The 2.5L/3.0L and 2.7L Diesel generators are solidly mounted to the engine, while the 4.2L generator is pivot mounted. The generators are driven at approximately three times engine speed.

Vehicles fitted with 2.5L or 3.0L engine (L3B generator)

Vehicles fitted with manual transmission have a one way clutch fitted to the drive pulley, which reduces belt slip.

The engine control module (ECM) can switch the voltage regulator between two voltages to optimize the charging of the battery.

The low voltage regulator setting is 13.6 volts and the high voltage regulator setting 15.3 volts, measured with the generator at 25 degrees centigrade (77 degrees fahrenheit) and charging at a rate of 5 amps. These values decrease with a rise in temperature or current flow.

The ECM determines the output voltage setting of the generator. The high voltage setting is always selected by the ECM once the vehicle has started. The ECM determines the period of time that the high voltage setting is selected for.

There are three different time periods selected by the ECM which is dependent upon the vehicle conditions when the vehicle is started:

- The longest period of time is selected if the ECM determines that the vehicle has been 'soaking' for sufficient time to allow the engine coolant temperature (ECT) and the air intake temperature (IAT) to fall within 6 degrees centigrade (43 degrees Fahrenheit) of each other.
- The intermediate time period is selected when the ECT and the IAT is below 15 degrees centigrade (59 degrees Fahrenheit).
- The shortest time period is the default time and is used to provide a short period of boost charge.

At the end of these time periods the voltage is always set to the low voltage setting to prevent the battery from being over charged.

The time periods are variable depending upon the temperature and battery voltage. The target voltage of the battery varies between 14 volts and 15 volts depending upon the ambient temperature and the vehicle operating conditions. Once this target voltage has been achieved, providing the vehicle has been operating for at least the shortest time period, the ECM will reduce the voltage regulator to the minimum setting of 13.6 volts.

Vehicles fitted with 2.7L Diesel engine (SC2 generator)

All vehicles use a PCM (Pulse Control Modulated) generator. This allows the output voltage to be controlled between 12.5 & 16V via a signal from the ECM.

This voltage is controlled between 13.5V & 15.5V. The system voltage is tailored more closely to the demands of the battery. At low ambient temperatures (as measured by the air conditioning ambient air sensor), the charging voltage is higher to improve charge acceptance. At high ambient temperatures the voltage is lower to reduce electrolyte loss and unnecessary battery self-heating. Also built into the strategy, is the ability to measure the battery voltage at Ignition On. A battery with low voltage at Ignition On is boost charged at a higher voltage for a calculated time before returning to its 'Base Characteristic' (defined by the prevailing ambient temperatures). The time and boost voltage depends upon the temperature and battery voltage at Ignition On.

All vehicles have a one way clutch fitted to the drive pulley, which reduces belt slip.

Vehicles fitted with 4.2L engine (SC1 generator)

The battery charging voltage is determined by the temperature of the generator. In cold conditions, starting the vehicle from cold the battery voltage will be between 14.2 volts and 15.1 volts and will reduce as the engine warms up. In hot conditions starting the vehicle when the engine is already warm the battery voltage will be between 13.5 volts and 14.3 volts.

A fault in the wiring or the connections from the generator to the ECM, will cause a fault code to be generated and stored in the ECM and the charge warning indicator lamp to be displayed in the instrument cluster after a short time.

With the ignition switch in the RUN position the charge warning lamp will be displayed in the instrument cluster when the generator is not generating power.

If a fault is detected with the generator a fault code will be generated and stored by the ECM. The charge warning indicator lamp will also be displayed in the IC. Units should be repaired as an assembly and not dismantled for repair.

GETtheMANUALS.org

Published: 11-May-2011

# Generator and Regulator - Generator

Diagnosis and Testing

For additional information, refer to sectionSection 414-00 Battery and Charging System - General Information

GETtheMANUALS.org

# Generator and Regulator - Generator2.5L NA V6 - AJV6 / 3.0L NA V6 - AJ27

Removal and Installation

## Removal

1. Disconnect the battery ground cable.
   For additional information, refer to Section 414-01 Battery, Mounting and Cables.
2. Remove the air deflector
   For additional information, refer to Section 501-02 Front End Body Panels.
3. Detach the accessory drive belt.
   1. Rotate the accessory drive belt tensioner counter-clockwise.
      1. Use a 3/8 inch square drive bar to rotate the accessory drive belt tensioner.
   2. Detach the accessory drive belt.

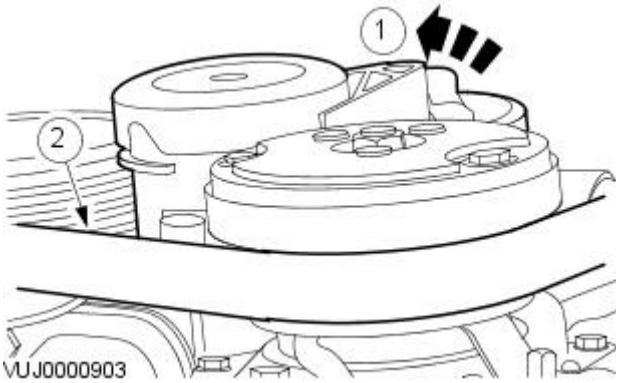


4. Detach the generator battery positive cable protective cover.

5. Remove the battery positive cable retaining nut.

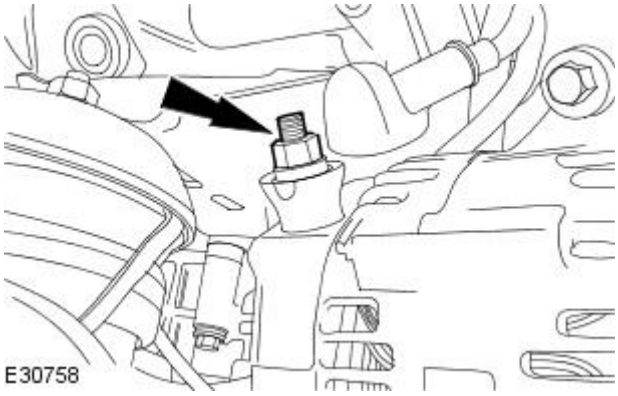


6. Disconnect the generator electrical connector.

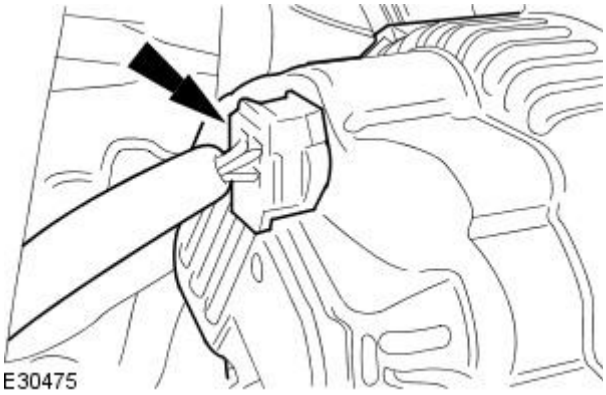


GETtheMANUALS.org

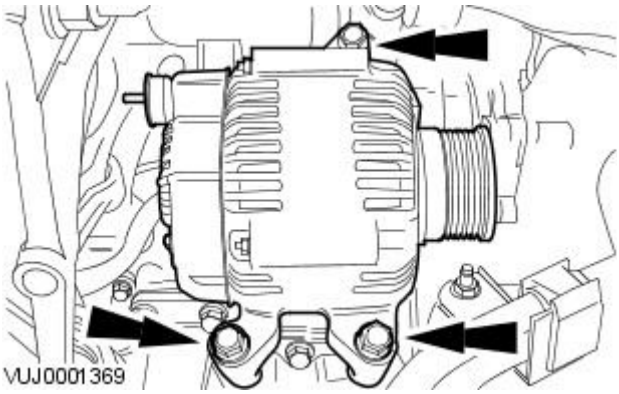


**7.** Remove the generator.

## Installation

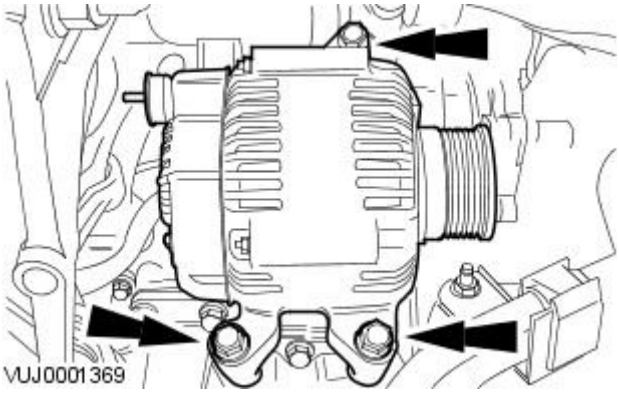


**1.** To install, reverse the removal procedure.

- Tighten to 48 Nm.

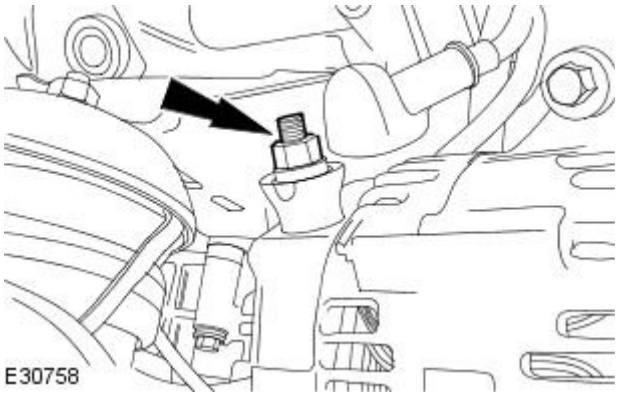


**2.** Tighten to 12 Nm.

GETtheMANUALS.org

# Generator and Regulator - Generator2.7L V6 - TdV6

Removal and Installation

| Special Tool(s) | |
|---|---|
| 303-703 | Accessory belt detensioner.<br><br>303-703 |

## Removal

1. Disconnect the battery.
   For additional information, refer to: Battery Disconnect and Connect (414-01 Battery, Mounting and Cables, General Procedures).
2. Remove the air cleaner.
   For additional information, refer to: Air Cleaner (303-12C Intake Air Distribution and Filtering - 2.7L V6 - TdV6, Removal and Installation).
3. Remove the cooling fan motor and shroud.
   For additional information, refer to: Cooling Fan Motor and Shroud (303-03C Engine Cooling - 2.7L V6 - TdV6, Removal and Installation).
4. Detach the accessory drive belt.
   1. Using the special tool, rotate the accessory drive belt tensioner counter clockwise.
   2. Detach the accessory drive belt.

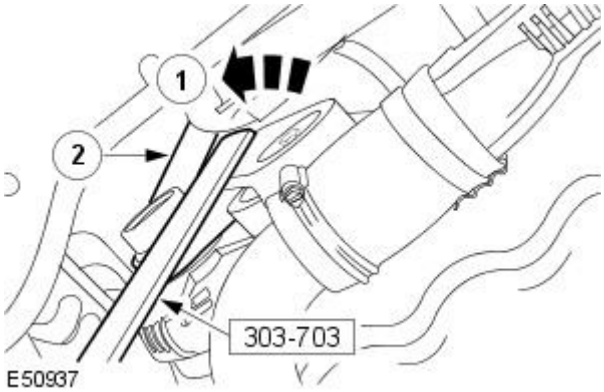


5. Disconnect the generator electrical connector.

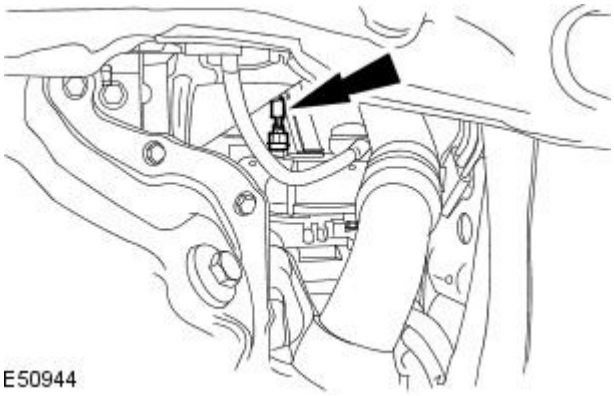


6. Detach the generator battery positive cable protective cover.

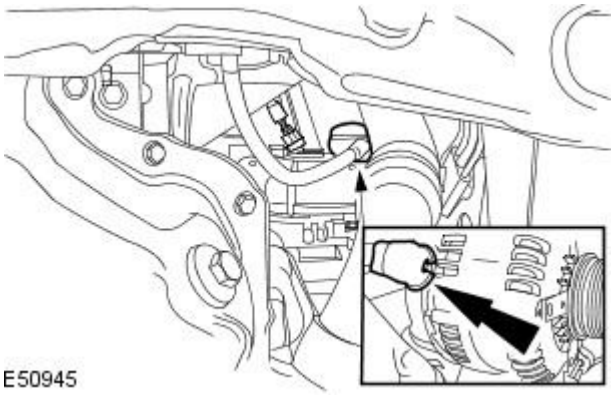


GETtheMANUALS.org

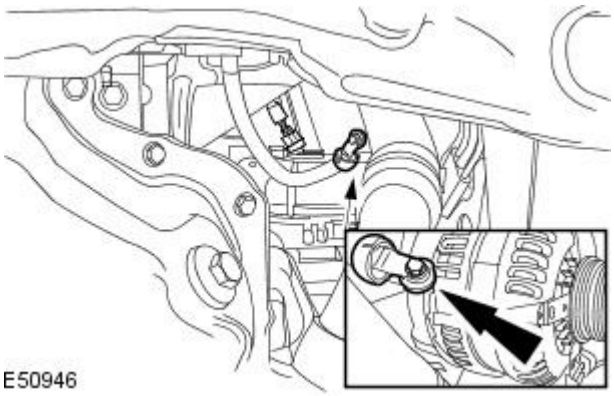


**7.** Disconnect the battery positive cable.

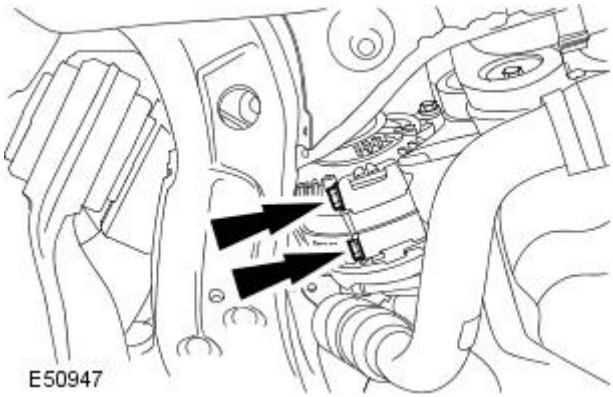


**8.** Remove the generator lower securing bolts.

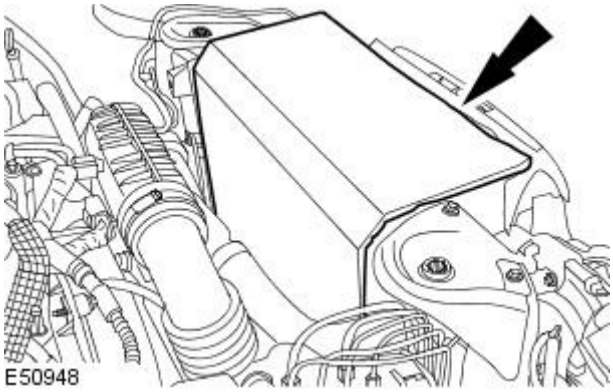


**9.** Lower the vehicle.

**10.** Protect the radiator cooling fins.

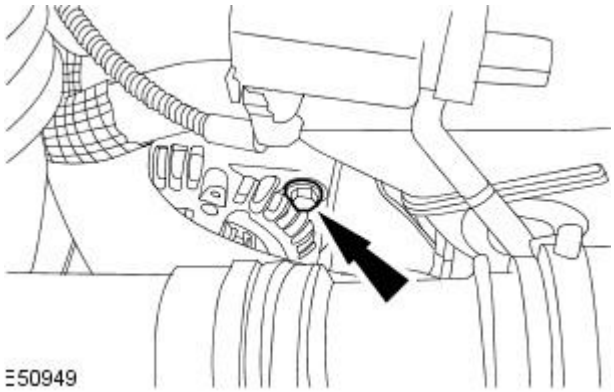


**11.** Remove the generator.

- Remove the generator upper retaining bolt.

## Installation

GETtheMANUALS.org

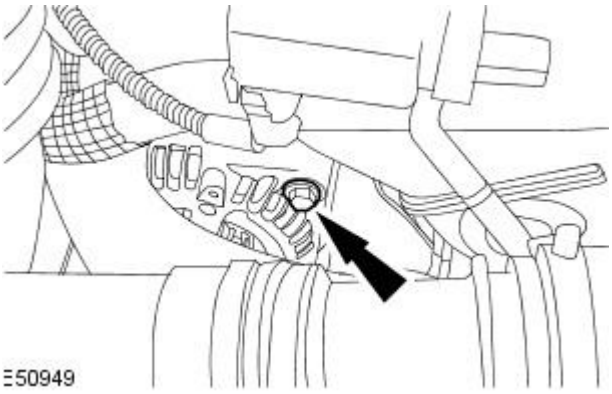


1. Install the generator.
   - Install the generator upper retaining bolt.
   - Tighten to 47Nm.

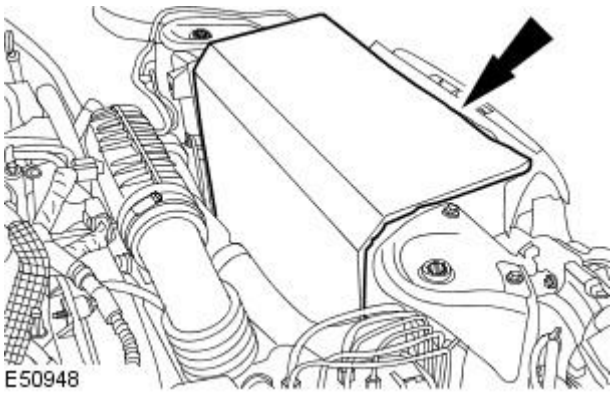


2. Remove the protection for the radiator cooling fins.

3. Raise the vehicle.
4. Install the generator lower securing bolts.
   - Tighten to 47Nm.

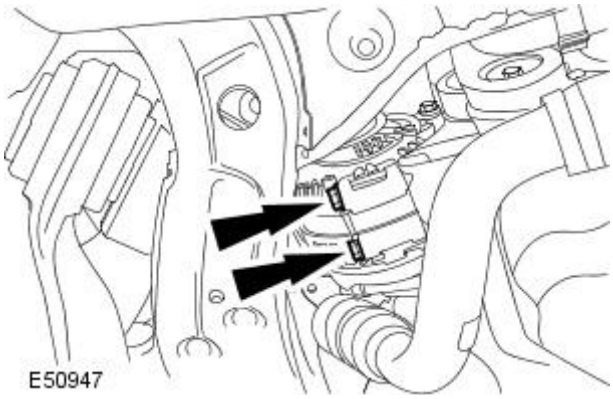


5. Connect the battery positive cable.

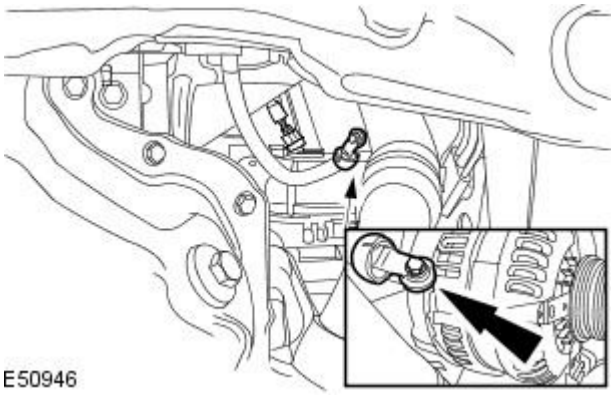


6. Attach the generator battery positive cable protective cover.

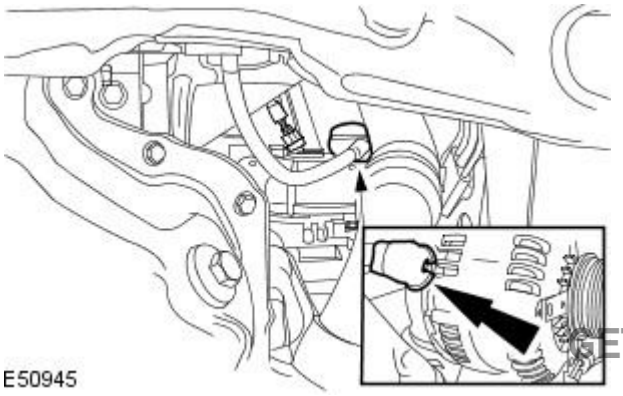


GETtheMANUALS.org

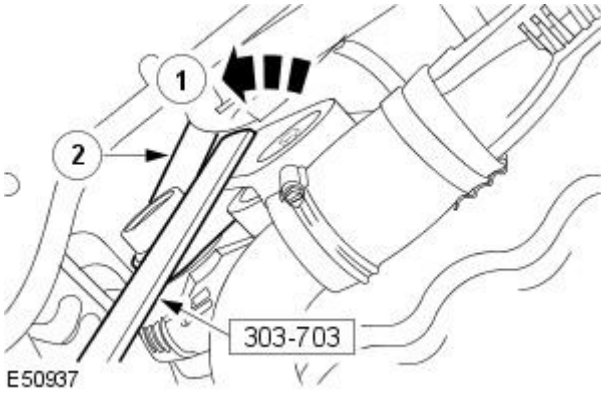


**7.** Attach the accessory drive belt.

1. Using the special tool, rotate the accessory drive belt tensioner counter clockwise.
2. Attach the accessory drive belt.

**8.** Install the cooling fan motor and shroud.
For additional information, refer to: Cooling Fan Motor and Shroud (303-03C Engine Cooling - 2.7L V6 - TdV6, Removal and Installation).

**9.** Install the air cleaner.
For additional information, refer to: Air Cleaner (303-12C Intake Air Distribution and Filtering - 2.7L V6 - TdV6, Removal and Installation).

**10.** Connect the battery.
For additional information, refer to: Battery Connect (414-01 Battery, Mounting and Cables, General Procedures).

GETtheMANUALS.org

# Generator and Regulator - GeneratorV8 4.2L Petrol / V8 S/C 4.2L Petrol

Removal and Installation

| Special Tool(s) | |
|---|---|
| 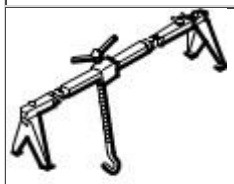 303-021 | Engine support beam.<br><br>303-021 |
| 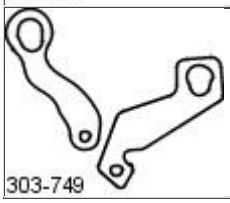 303-749 | Engine lifting brackets<br><br>303-749 |

## Removal

All vehicles

1. Disconnect the battery ground cable.
   For additional information, refer to: Battery Disconnect and Connect (414-01 Battery, Mounting and Cables, General Procedures).
2. Detach the accessory drive belt.
   1. Rotate the accessory drive belt tensioner counter-clockwise.
      1. Use a 3/8 inch square drive bar to rotate the accessory drive belt tensioner.
   2. Detach the accessory drive belt.

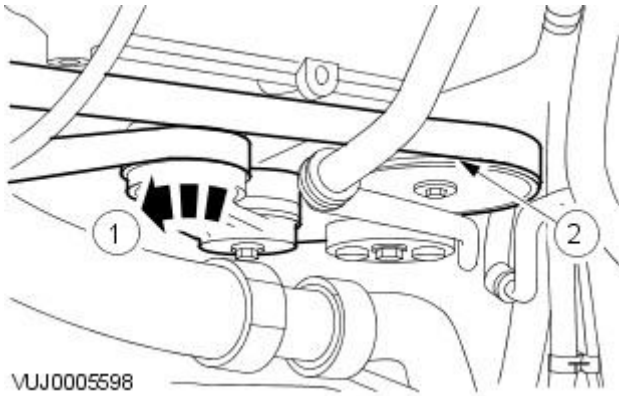

VUJ0005598

3. Remove the air deflector.
   For additional information, refer to: Air Deflector (501-02 Front End Body Panels, Removal and Installation).
4. Remove the generator air duct.

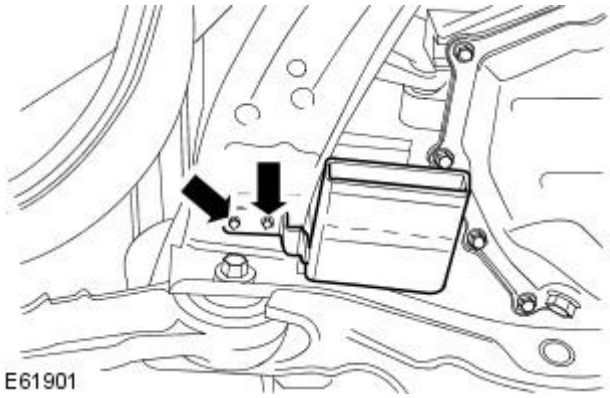
E61901

5. Remove the splash shield.
6. Remove the right-hand engine mounting lower retaining bolt.

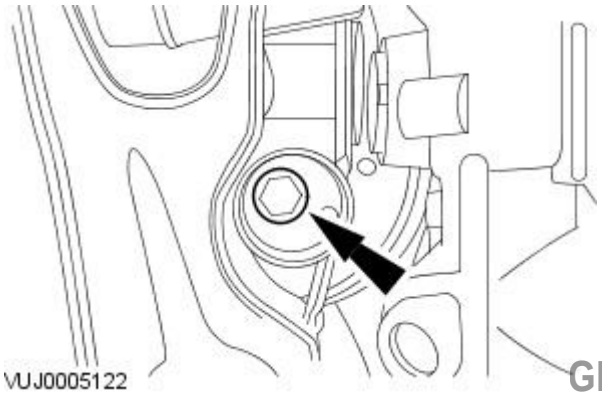
VUJ0005122

GETtheMANUALS.org

**7.** Lower the vehicle.

Vehicles without supercharger

**8.** Remove the throttle body. For additional information, refer to: (303-04B Fuel Charging and Controls - V8 4.2L Petrol/V8 S/C 4.2L Petrol)

Throttle Body - Vehicles Without: Supercharger, VIN Range: M45255->N52047 (Removal and Installation),
Throttle Body - Vehicles Without: Supercharger, VIN Range: N52048->N99999 (Removal and Installation).

All vehicles

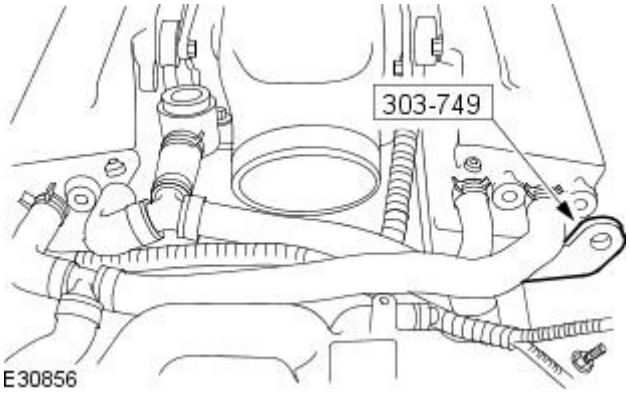


**9.** NOTE: Vehicles with supercharger shown, vehicles without supercharger similar.

Install the special tool.

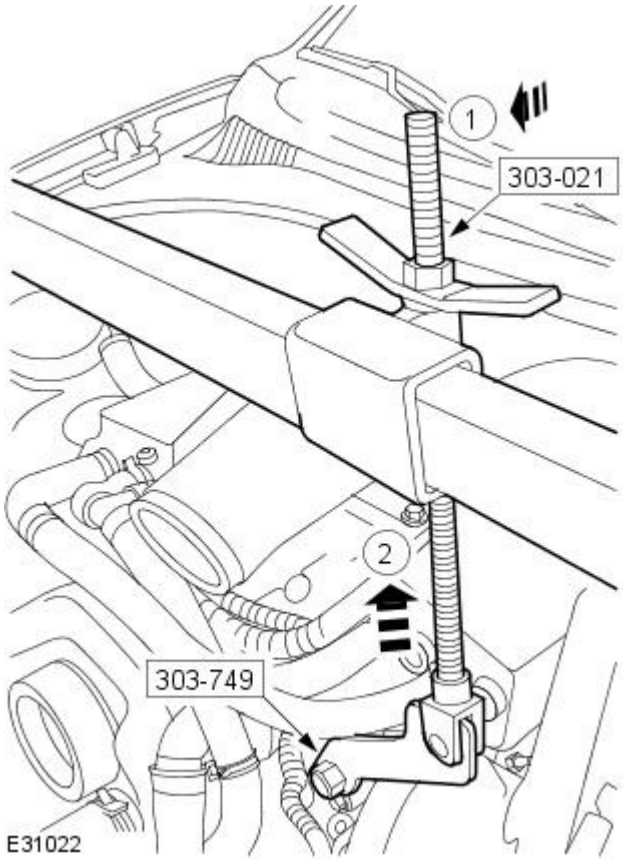


**10.** NOTE: Vehicles with supercharger shown, vehicles without supercharger similar.

Using the special tools, raise the engine to a suitable height.

**11.** Raise the vehicle.

Right-hand drive vehicles

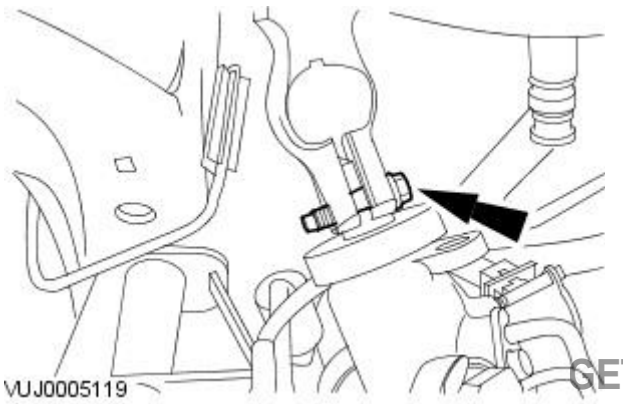


**12.** Remove the steering gear shaft pinch bolt.

GETtheMANUALS.org

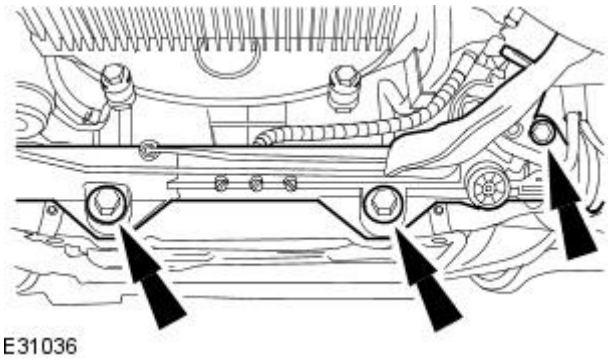


**13.** Detach the steering gear.

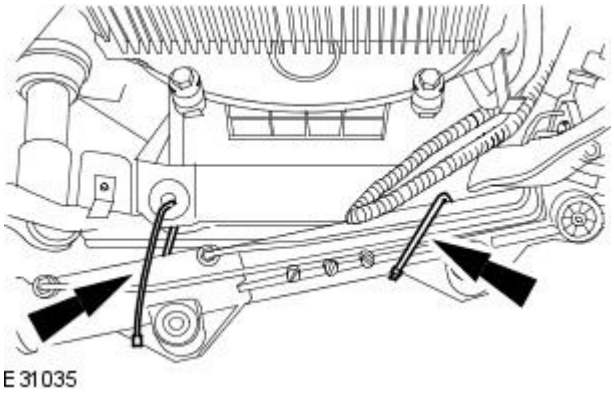


**14.** Secure the steering gear.

All vehicles

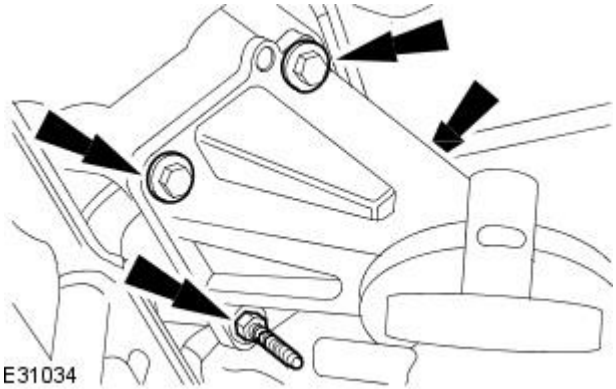


**15.** Remove the engine mounting and bracket assembly.

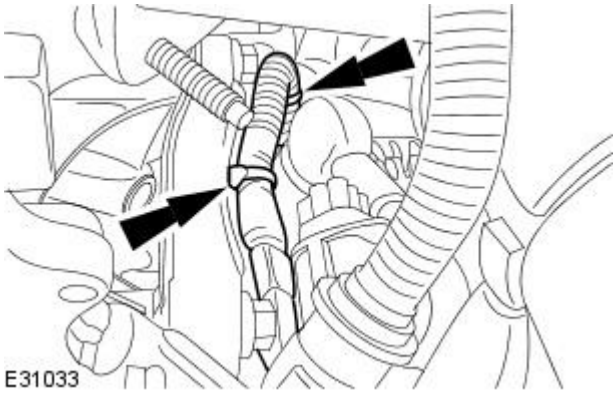


**16.** Detach the wiring harness.

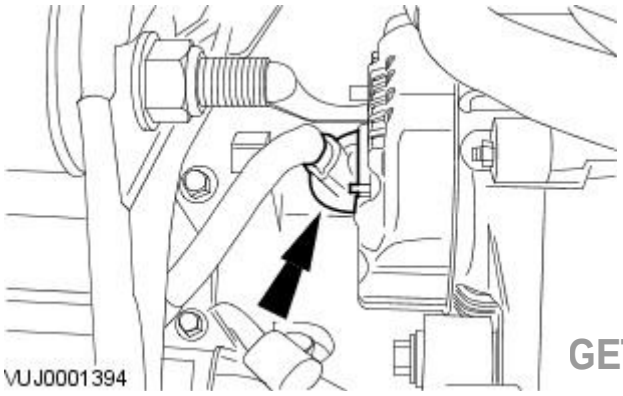


**17.** Detach the generator battery positive cable protective cover.

GETtheMANUALS.org

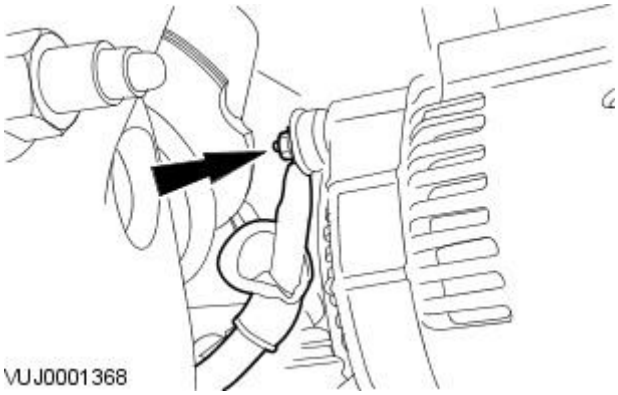


**18.** Disconnect the battery positive cable.

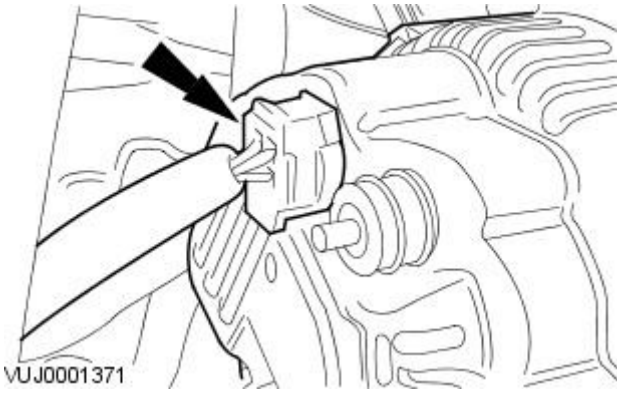


**19.** Disconnect the generator electrical connector.

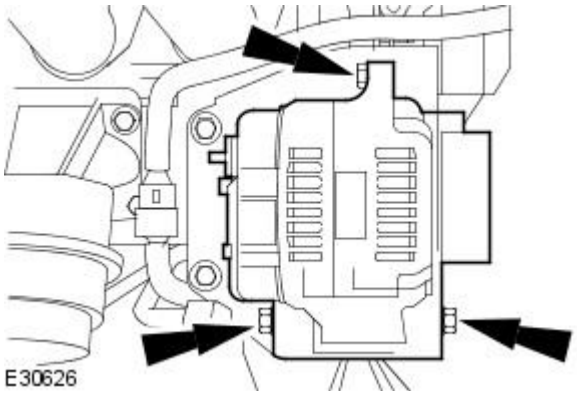


**20.** Remove the generator.

## Installation

All vehicles

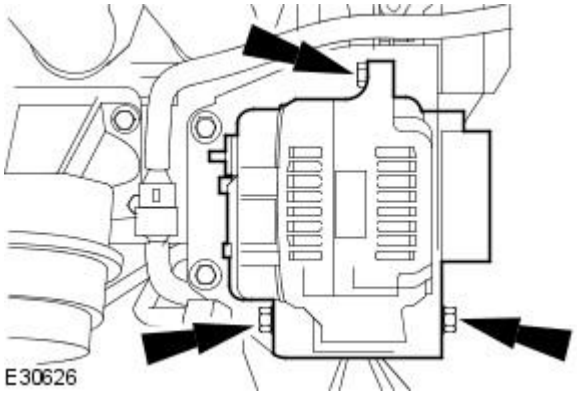


**1.** To install reverse the removal procedure.

- Tighten the generator upper retaining bolt to 21 Nm.
- Tighten the generator lower retaining bolts to 40 Nm.

GETtheMANUALS.org

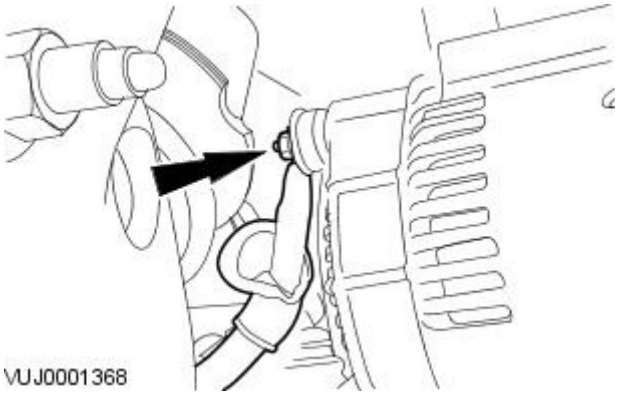


**2.** Tighten to 12 Nm.

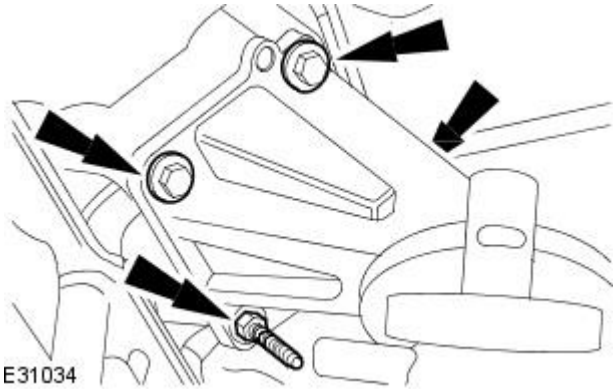


**3.** Tighten to 25 Nm.

Right-hand drive vehicles

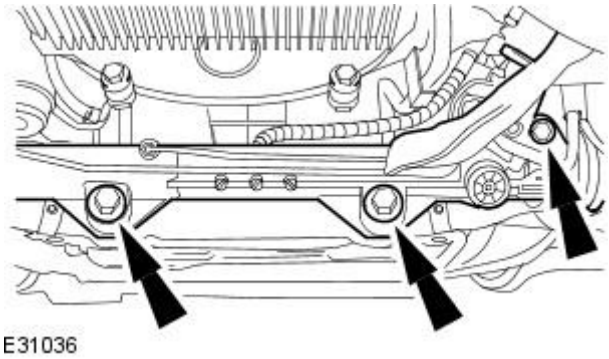


**4.** Tighten to 100 Nm.

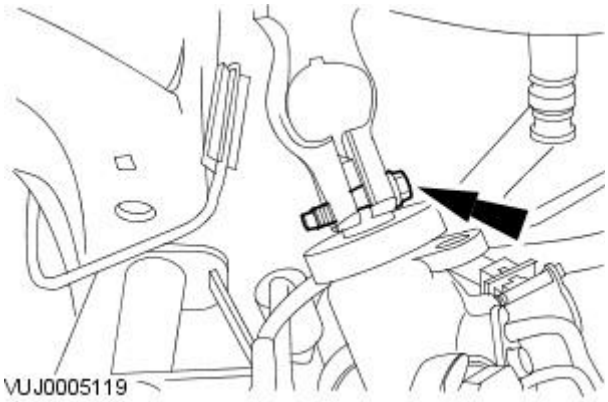


**5.** Tighten to 35 Nm.

All vehicles

GETtheMANUALS.org

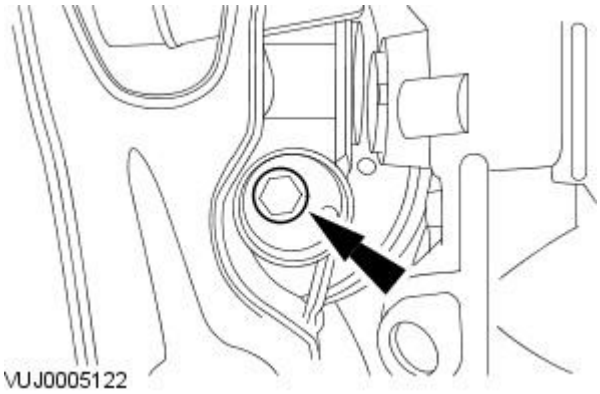


**6.** Tighten to 63 Nm.

GETtheMANUALS.org

# Information and Entertainment System - General Information - Audio System

Diagnosis and Testing

## Inspection and Verification

1. **1.** Verify the customer concern.
2. **2.** Visually inspect for obvious signs of mechanical or electrical damage.

**Visual Inspection Chart**

| Mechanical | Electrical |
|---|---|
| • Audio unit damage<br>• Cassette player damaged, not loading<br>• Compact disc player jammed, not loading<br>• Scratched/dirty compact discs | • Fuses<br>• Loose or corroded connector(s)<br>• Audio unit<br>• Speakers |

3. **3.** If an obvious cause for an observed or reported concern is found, correct the cause (if possible) before proceeding to the next step.
4. **4.** If the cause is not visually evident, verify the symptom and refer to the Jaguar Approved Diagnostic System.

GETtheMANUALS.org

# Information and Entertainment System - General Information - Cassette Player Cleaning

General Procedures

**1.** NOTE: Advise the customer of the need for regular tape head cleaning. It is recommended that the tape heads are cleaned after every 15 hours of play.

• NOTE: The audio unit incorporates a reminder facility to indicate when 15 hours of tape has play has occured. For more detail please refer to the audio handbook.

• NOTE: Question the customer on the type of tapes that are normally used. Low quality tapes can not only damage the cassette player heads, the plastic shells may twist and jam in the deck. Loose cassette labels may also become detached in the deck and jam the deck's operation. Jaguar Audio use high quality cassette decks which have precision moving parts, and need to be operated with care.

• NOTE: Make sure that the cleaning cassette is used prior to any assesment of tape audio quality.

Apply isopropyl alcohol to the cleaning cassette and insert it into the cassette player and run it for approximately 30 seconds.

GETtheMANUALS.org

# Audio Unit -

**Torque Specifications**

| Description | Nm | lb-ft | lb-in |
|---|---|---|---|
| Audio unit retaining screws | 2 | - | 18 |
| Compact disc (CD) changer retaining screws | 1 | - | 9 |
| Amplifier retaining nuts | 4 | - | 35 |
| Steering wheel audio control switch retaining screws | 1 | - | 9 |

GETtheMANUALS.org

# Audio Unit - Audio System

Description and Operation

Base cassette

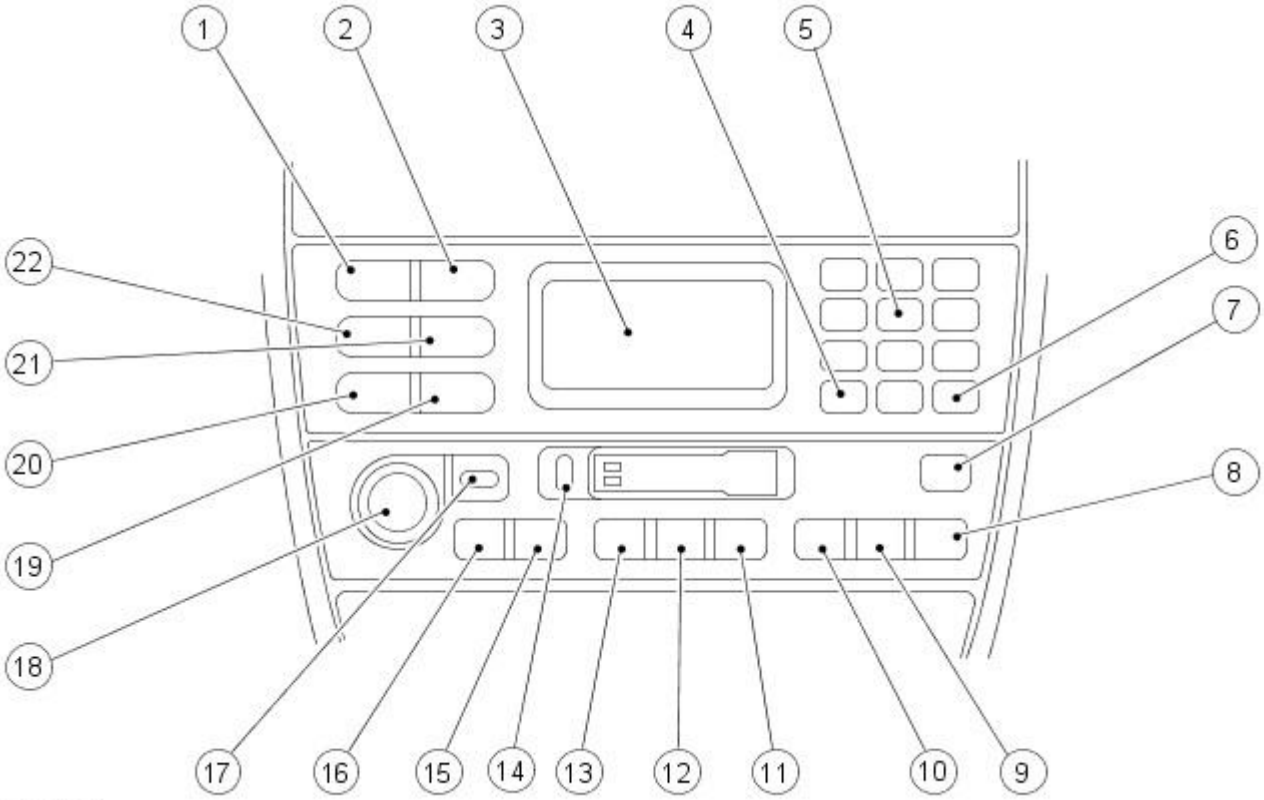


VUJ0004284

| Item | Part Number | Description |
|---|---|---|
| 1 | — | Dolby noise reduction button |
| 2 | — | Repeat CD button |
| 3 | — | Audio system display |
| 4 | - | Seek a stored number from the phones memory |
| 5 | — | Radio station pre-set buttons |
| 6 | — | Seek a stored number from the phones memory |
| 7 | — | CD track mix button |
| 8 | — | Priority programme type button |
| 9 | — | Traffic announcement button |
| 10 | — | Auto memory button |
| 11 | — | Select CD changer |
| 12 | — | Cassette play and side change button |
| 13 | — | Audio Source - AM/FM radio |
| 14 | - | Cassette eject button |
| 15 | — | CD seek forward, cassette fast forward, radio seek forward button |
| 16 | — | CD seek back, cassette fast rewind, radio seek back button |
| 17 | — | Mode button (volume/bass/treble/balance/fade) |
| 18 | — | ON/OFF push (rotary volume/bass/treble/balance/fade) knob |
| 19 | — | Phone mode - send/end button |
| 20 | — | Phone mode select button |
| 21 | — | Memory recall button |
| 22 | — | Cancel button |

Base CD/MD

GETtheMANUALS.org

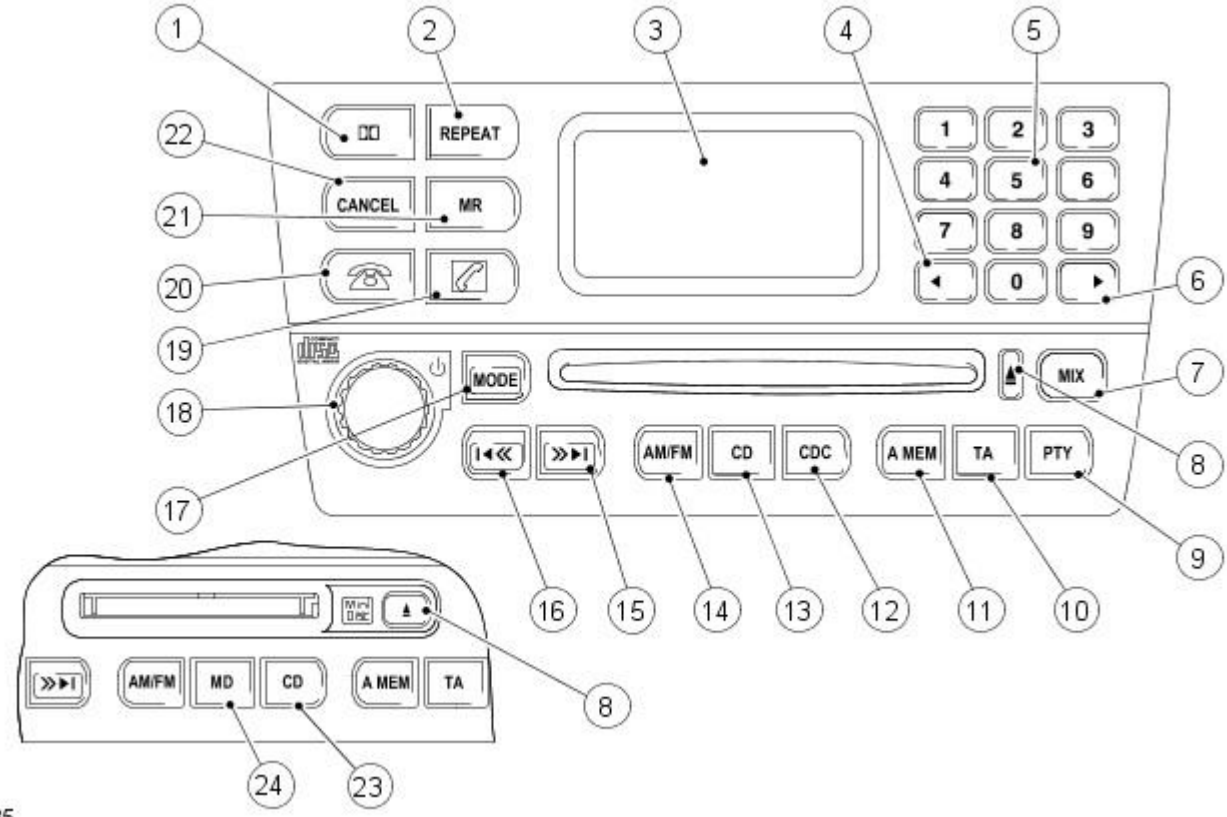


E30385

| Item | Part Number | Description |
|---|---|---|
| 1 | - | Mutes audio |
| 2 | - | Repeat CD button |
| 3 | - | Audio system display |
| 4 | - | Seek a stored number from the phones memory |
| 5 | - | Radio station pre-set buttons |
| 6 | - | Seek a stored number from the phones memory |
| 7 | - | Mix CDs or CD/MD tracks button |
| 8 | - | Eject CD or MD |
| 9 | - | Priority programme type button |
| 10 | - | Traffic announcement button |
| 11 | - | Auto memory button |
| 12 | - | Select CD changer |
| 13 | - | Select compact disc when in other audio mode, or CD pause |
| 14 | - | Audio Source - AM/FM radio |
| 15 | - | CD seek forward, cassette fast forward, radio seek forward button |
| 16 | - | CD seek back, cassette fast rewind, radio seek back button |
| 17 | - | Mode button (volume/bass/treble/balance/fade) |
| 18 | - | ON/OFF push (rotary volume/bass/treble/balance/fade) knob |
| 19 | - | Phone mode - send/end button |
| 20 | - | Phone mode select button |
| 21 | - | Memory recall button |
| 22 | - | Cancel button |
| 23 | - | Select CD changer |
| 24 | - | Select mini disc play when in other audio mode or MD pause |

Touch screen cassette

www.JagDocs.com

GETtheMANUALS.org

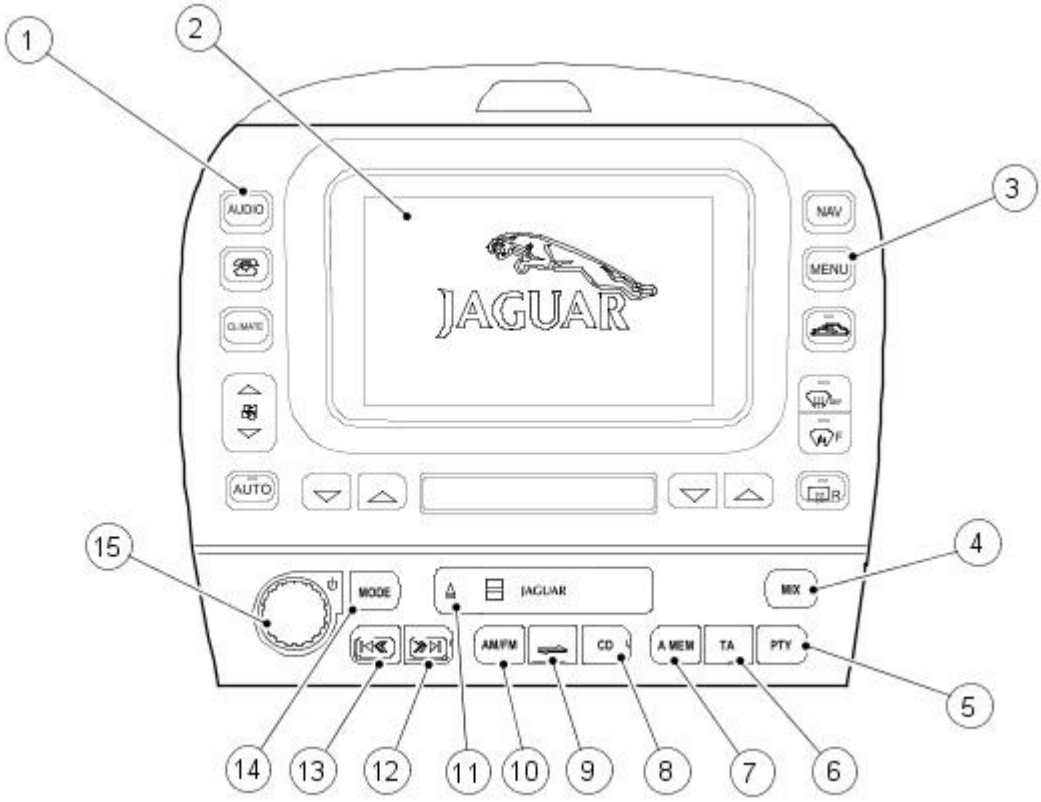


E 30386

| Item | Part Number | Description |
|---|---|---|
| 1 | - | On/Off push for touch-screen controls |
| 2 | - | Touch-screen display |
| 3 | - | Press to access touch-screen options |
| 4 | - | CD track mix button |
| 5 | - | Priority programme type button |
| 6 | - | Traffic announcement button |
| 7 | - | Auto memory button |
| 8 | - | Select CD changer |
| 9 | - | Cassette play and side change button |
| 10 | - | Audio Source - AM/FM radio |
| 11 | - | Cassette eject button |
| 12 | - | CD seek forward, cassette fast forward, radio seek forward button |
| 13 | - | CD seek back, cassette fast rewind, radio seek back button |
| 14 | - | Mode button (volume/bass/treble/balance/fade) |
| 15 | - | ON/OFF push (rotary volume/bass/treble/balance/fade) knob |

Touch screen CD/MD

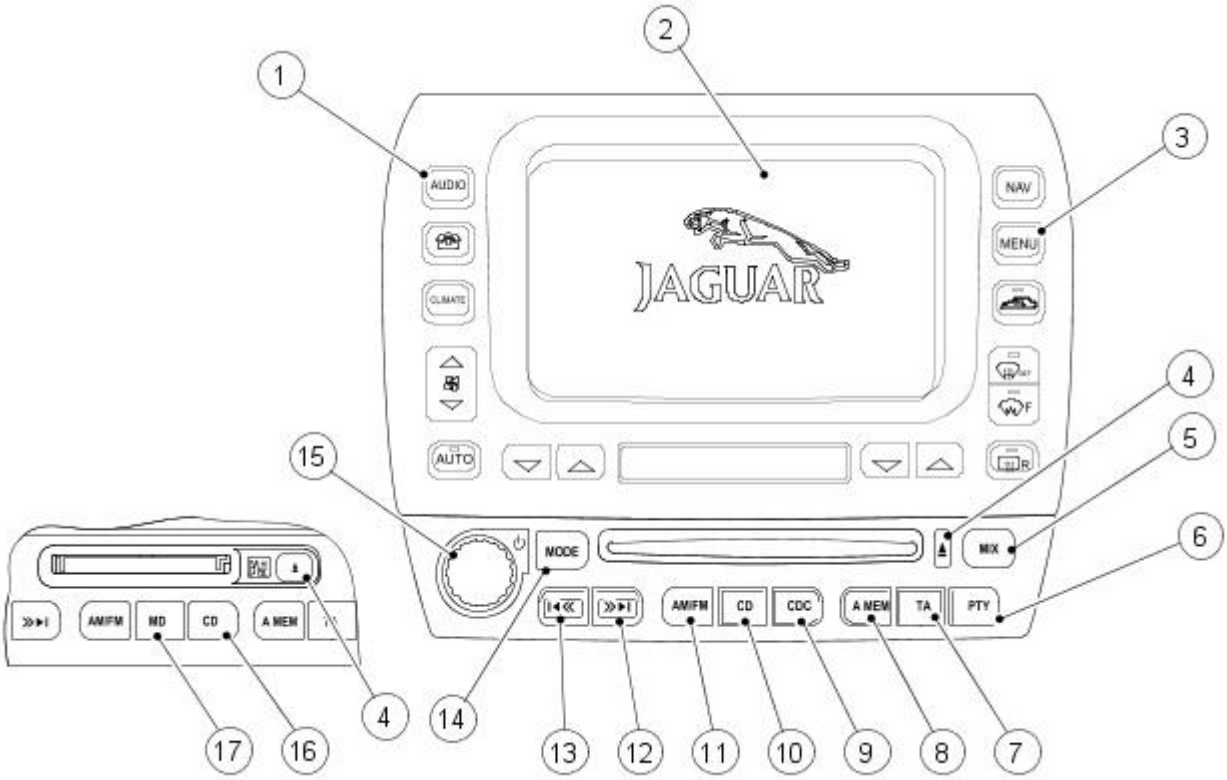


E30387

| Item | Part Number | Description |
|---|---|---|
| 1 | - | On/Off push for touch-screen controls |
| 2 | - | Touch-screen display |

GETtheMANUAL.org

| | | |
|---|---|---|
| 3 | - | Press to access touch-screen options |
| 4 | - | Eject CD or MD |
| 5 | - | Mix CDs or CD/MD tracks button |
| 6 | - | Priority programme type button |
| 7 | - | Traffic announcement button |
| 8 | - | Auto memory button |
| 9 | - | Select CD changer |
| 10 | - | Select compact disc when in other audio mode, or CD pause |
| 11 | - | Audio Source - AM/FM radio |
| 12 | - | CD seek forward, cassette fast forward, radio seek forward button |
| 13 | - | CD seek back, cassette fast rewind, radio seek back button |
| 14 | - | Mode button (volume/bass/treble/balance/fade) |
| 15 | - | ON/OFF push (rotary volume/bass/treble/balance/fade) knob |
| 16 | - | Select CD changer |
| 17 | - | Select mini disc play when in other audio mode or MD pause |

The choice of two entertainment systems is available; base or premium. The radio or mini disc player and the aerial are common to both. Both systems may be operated remotely by use of switches located on the steering wheel.

The premium system has the addition of different speakers, touch screen control and a CD autochanger. The CD autochanger is located in the luggage compartment.

Refer to the Sound System Handbook for setting-up procedures and use, after diagnostic or repair operations.

GETtheMANUALS.org

Published: 11-May-2011

# Audio Unit - Audio System

Diagnosis and Testing

For additional information, refer toSection 415-00 Information and Entertainment System - General Information

GETtheMANUALS.org

# Audio Unit - Amplifier

Removal and Installation

## Removal

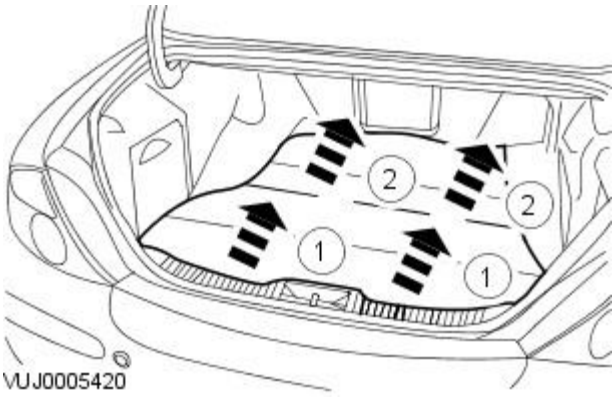


**1.** Reposition the luggage compartment floor covering.

1. Detach the luggage compartment floor covering.
2. Reposition the luggage compartment floor covering.

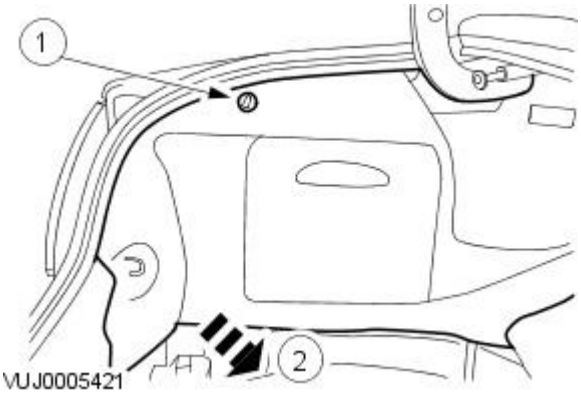


**2.** Reposition the luggage compartment side trim panel.

1. Remove the luggage compartment side trim retaining clip.
2. Reposition the luggage compartment side trim panel.

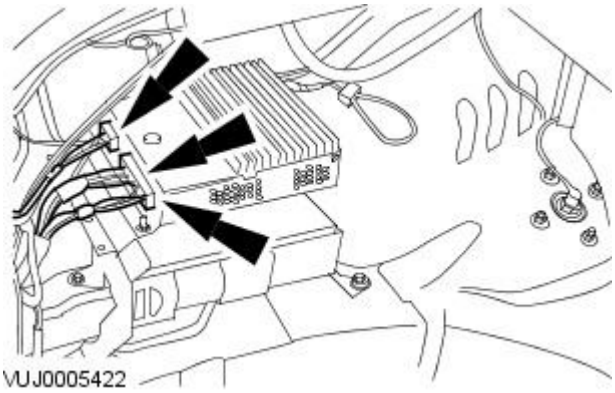


**3.** Disconnect the audio unit amplifier electrical connectors.

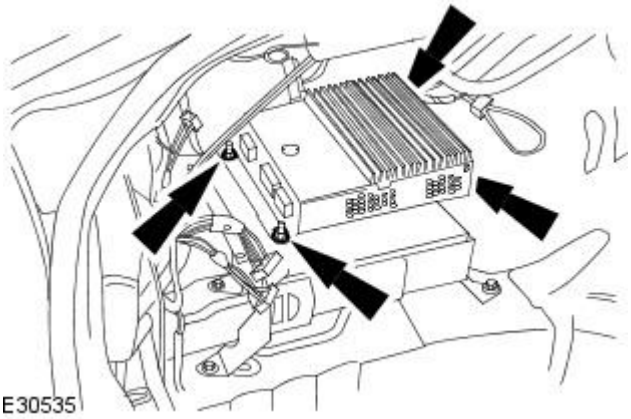


**4.** Remove the audio unit amplifier.

- Remove the audio unit amplifier retaining nuts.

## Installation

**1.** To install, reverse the removal procedure.

1. Tighten to 4 Nm.

GETtheMANUALS.org

# Audio Unit - Audio Unit

Removal and Installation

## Removal

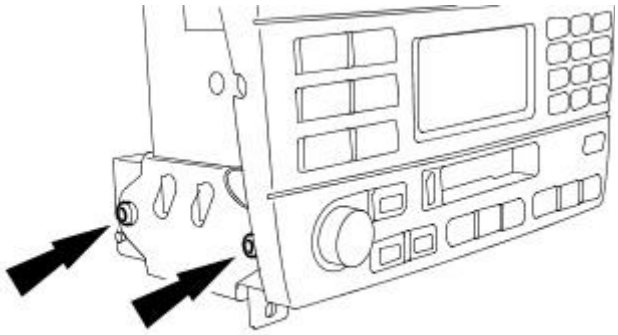

VUJ0004289

1. Remove the instrument panel console.
   For additional information, refer to Section 501-12 Instrument Panel and Console.
2. NOTE: Left-hand shown, right-hand similar.

   Remove the audio unit.

   - Remove the retaining screws.

## Installation

1. To install, reverse the removal procedure.

   1. Tighten to 2 Nm.

GETtheMANUALS.org

# Audio Unit - Compact Disc (CD) Changer

Removal and Installation

## Removal

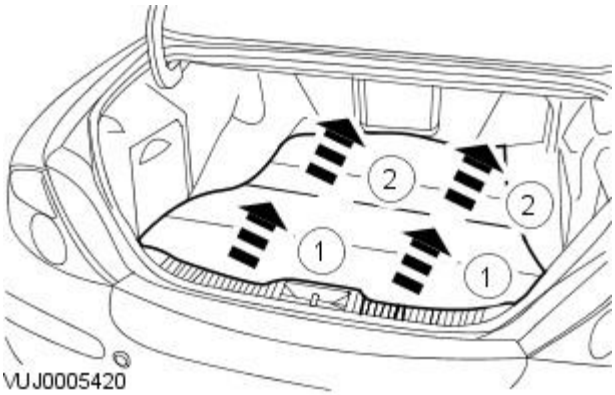


**1.** Reposition the luggage compartment floor covering.

1. Detach the luggage compartment floor covering.
2. Reposition the luggage compartment floor covering.

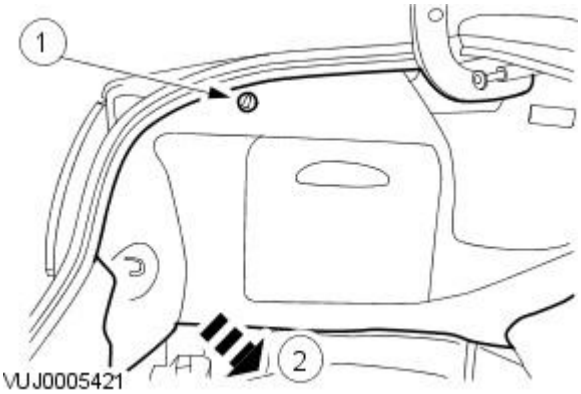


**2.** Reposition the luggage compartment side trim panel.

1. Remove the luggage compartment side trim retaining clip.
2. Reposition the luggage compartment side trim panel.

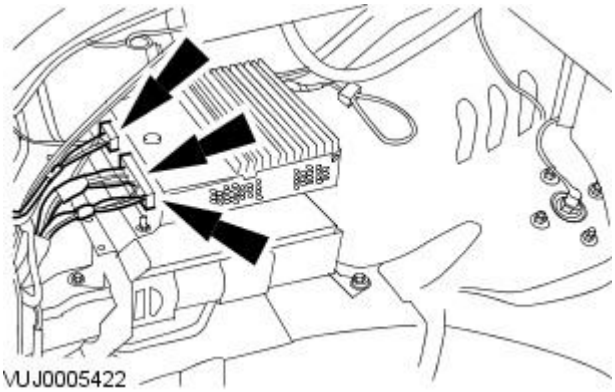


**3.** Disconnect the audio unit amplifier electrical connectors.

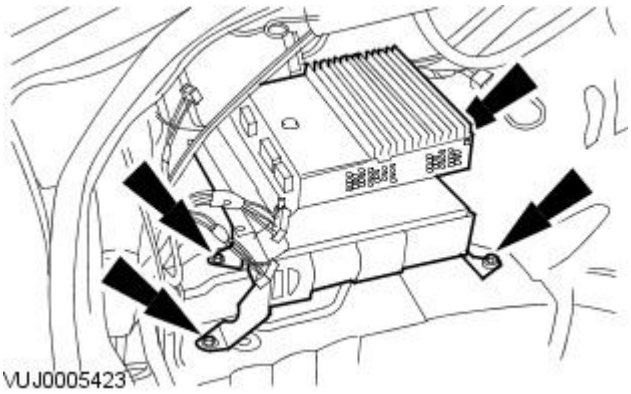


**4.** Reposition the compact disc changer and audio unit amplifier.

GETtheMANUALS.org

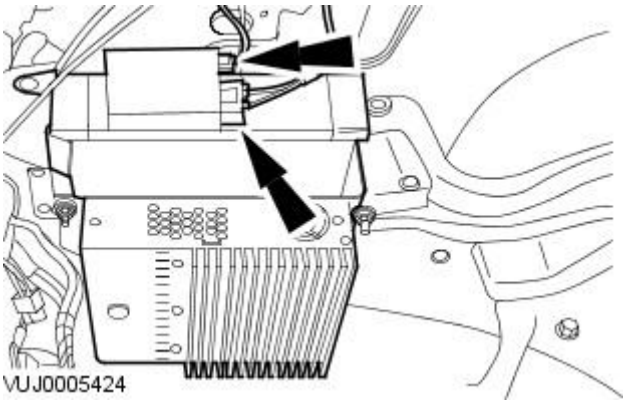


**5.** Disconnect the compact disc changer electrical connectors.

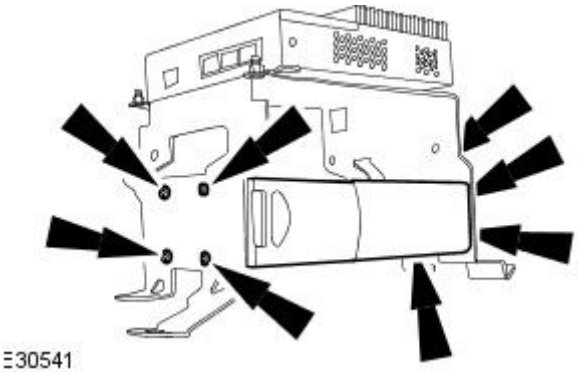


**6.** Remove the compact disc changer.

## Installation

**1.** To install, reverse the removal procedure.

- Tighten to 1 Nm.

GETtheMANUALS.org

# Audio Unit - Steering Wheel Audio Controls

Removal and Installation

1. Remove the driver airbag module. For additional information, refer to Section 501-20A Safety Belt System / 501-20B Supplemental Restraint System.
2. Detach the steering wheel audio controls.

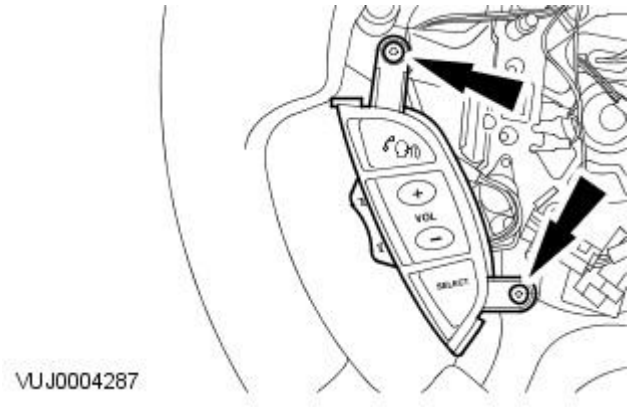


3. Remove the steering wheel audio controls.

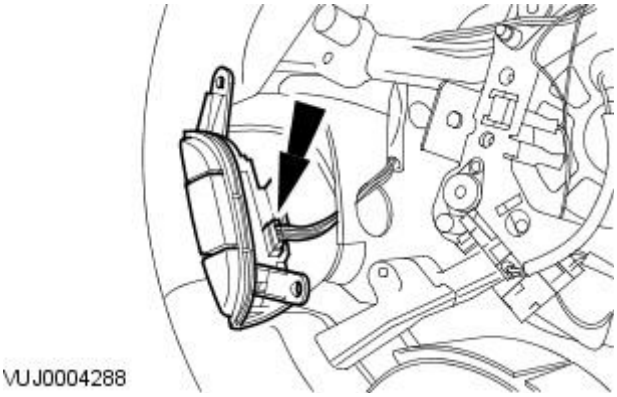


## Installation

1. To install, reverse the removal procedure.

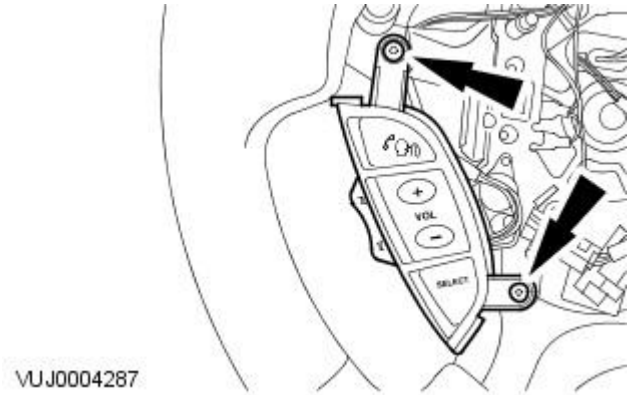


GETtheMANUALS.org

# Antenna - Antenna

Description and Operation

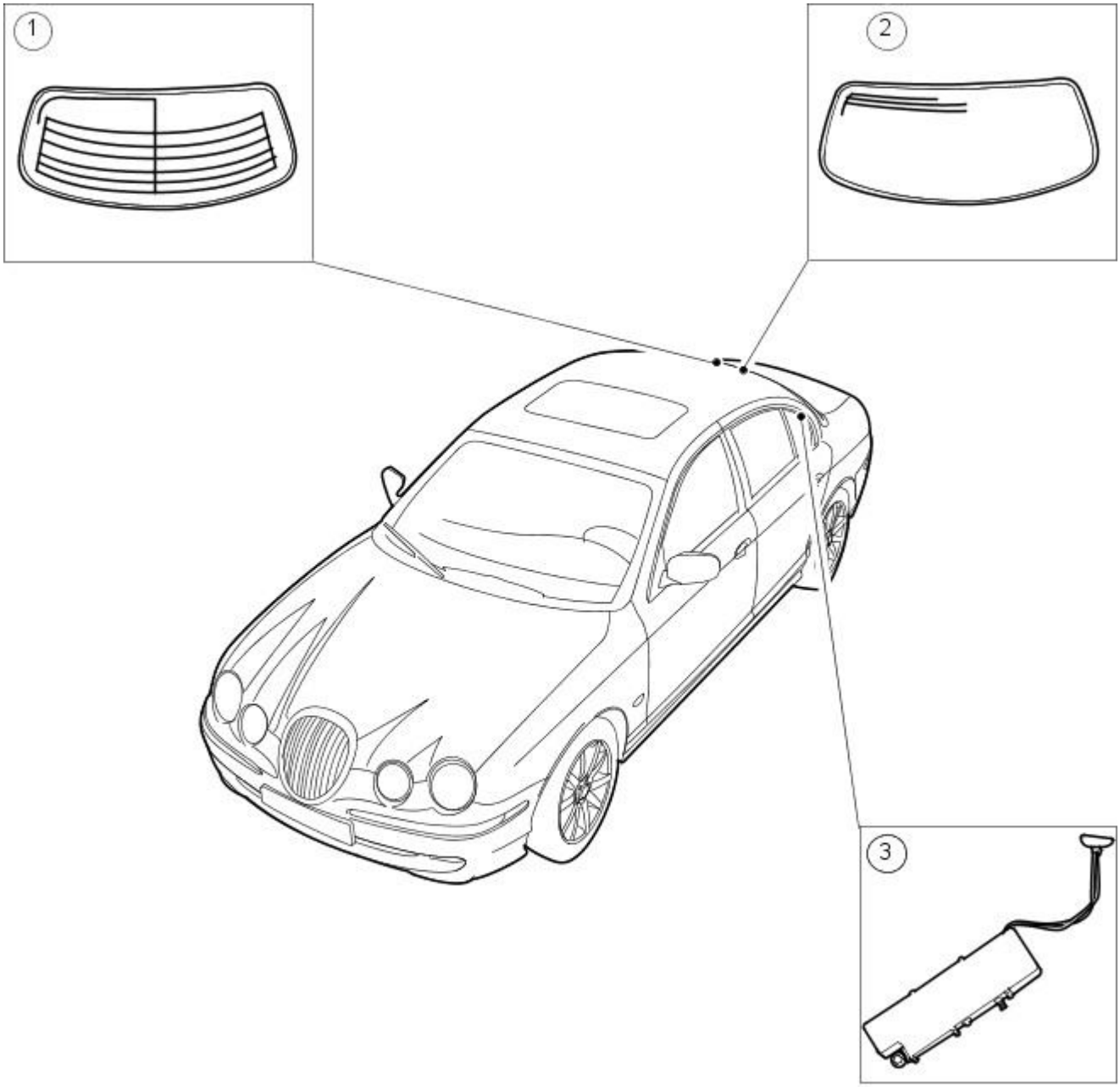


E 30203

| Item | Part Number | Description |
|---|---|---|
| 1 | — | Antenna FM |
| 2 | — | Antenna AM |
| 3 | — | Antenna isolator module |

The antenna cable is split into two sections:

- Audio unit to floor console connector.
- Floor console connector to antenna isolator module.

The audio unit to antenna isolator module cable is located in the body wiring harness.

There are two antennas fitted to the vehicle, an AM antenna and an FM antenna, both are located in the rear windshield glass. The AM antenna is above the heated rear windshield element to the left-hand side. The FM antenna utilizes the heated rear windshield demist element but does not carry the demist current. The power connector to the demist screen has a filter in line called a positive wavetrap and the ground connector to the demist screen has a filter called a negative wavetrap.

An optional diversity FM antenna is available with the premium sound system, similar to the AM/FM antenna, except that three FM antennas are derived from the demist pattern. As the demist screen is split to create the extra antennas, a double wavetrap is fitted which has two positive connectors. The antenna isolator switches between the three FM inputs and sends the strongest to the radio.

The antenna isolator module controls both antennas.

GETtheMANUALS.org

# Antenna - Antenna

Diagnosis and Testing

## Inspection and Verification

1. **1.** Verify the customer concern.
2. **2.** Visually inspect for obvious signs of electrical damage.

**Visual Inspection Chart**

| Electrical |
| --- |
| • Antenna isolator module<br>• Antenna AM<br>• Antenna FM<br>• Positive wavetrap<br>• Negative wavetrap<br>• Harness/electrical connectors<br>• Audio unit |

3. **3.** If an obvious cause for an observed or reported concern is found, correct the cause (if possible) before proceeding to the next step.
4. **4.** If the cause is not visually evident, verify the symptom and refer to the Jaguar Approved Diagnostic System.

GETtheMANUALS.org

# Antenna - Antenna Isolator Module

Removal and Installation

## Removal

1. Remove the C-pillar trim panel.
   For additional information, refer to Section 501-05 Interior Trim and Ornamentation.
2. Disconnect the antenna isolator module electrical connectors.

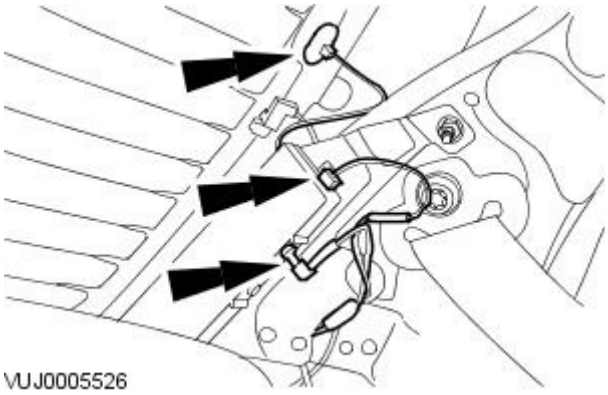

VUJ0005526

3. Remove the antenna isolator module retaining bracket .

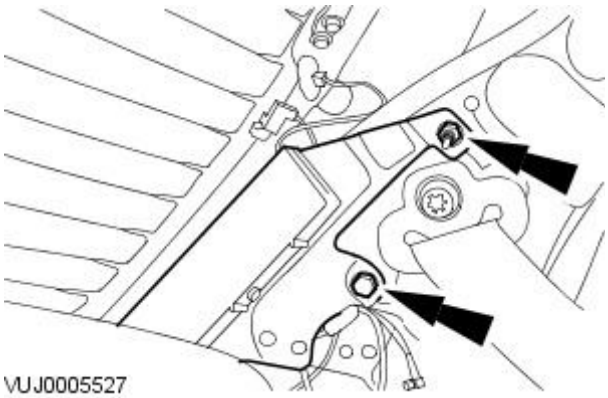

VUJ0005527

4. Remove the antenna isolator module.
   - Remove the retaining screw.

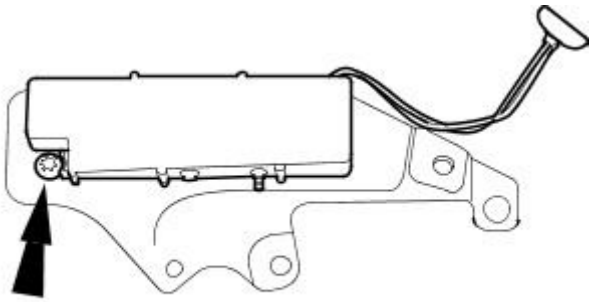

VUJ0005528

## Installation

1. To install, reverse the removal procedure.

GETtheMANUALS.org

# Speakers - Speakers

Description and Operation

Optimum acoustic detail is achieved through mounting each speaker high on each door panel.

On the Premium sound system there are:

- Four door speakers which incorporate high frequency tweeters within the mid range cone.
- Two sub-woofers.

GETtheMANUALS.org

# Speakers - Speakers

Diagnosis and Testing

## Inspection and Verification

1. **1.** Verify the customer concern.
2. **2.** Visually inspect for obvious signs of electrical damage.

**Visual Inspection Chart**

| Electrical |
| --- |
| • Speaker(s)<br>• Harness/electrical connectors<br>• Audio unit<br>• Amplifier |

3. **3.** If an obvious cause for an observed or reported concern is found, correct the cause (if possible) before proceeding to the next step.
4. **4.** If the cause is not visually evident, verify the symptom and refer to the Jaguar Approved Diagnostic System.

GETtheMANUALS.org

# Speakers - Front Door Speaker

Removal and Installation

## Removal

1. Remove the front door trim panel. For additional information, refer to Section 501-05 Interior Trim and Ornamentation.
2. Detach the front door speaker.

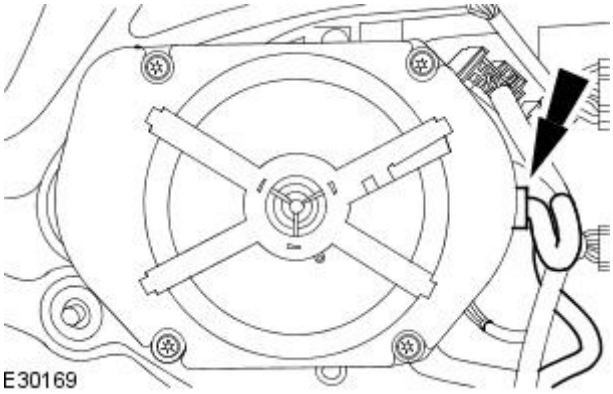


3. Remove the front door speaker.

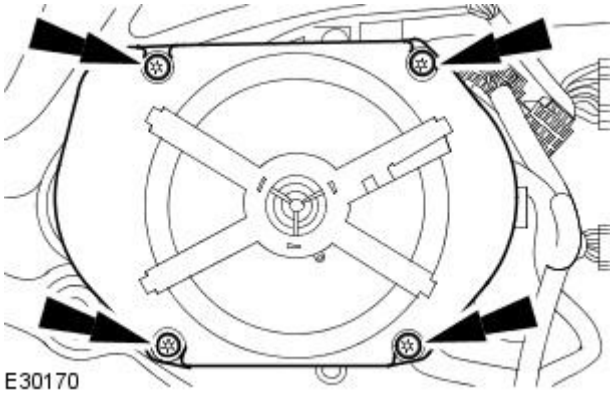


## Installation

1. To install, reverse the removal procedure.

GETtheMANUALS.org

# Speakers - Rear Door Speaker

Removal and Installation

## Removal

1. Remove the rear door trim panel. For additional information, refer to Section 501-05 Interior Trim and Ornamentation.
2. Detach the rear door speaker.

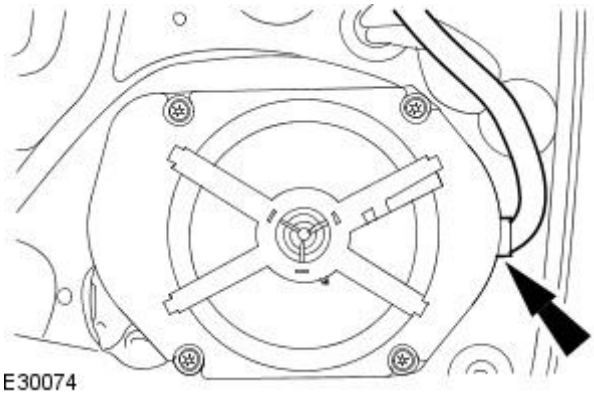


3. Remove the rear door speaker.

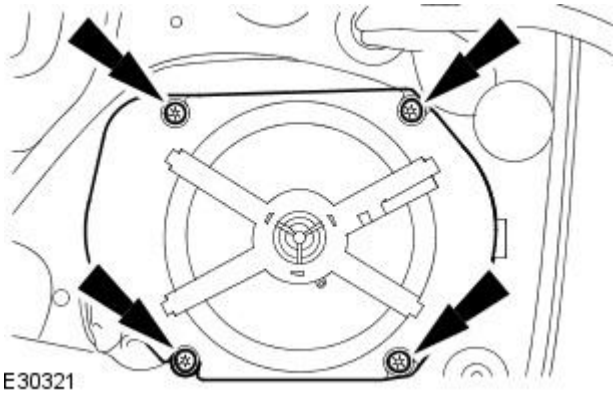


## Installation

1. To install, reverse the removal procedure.

GETtheMANUALS.org

# Speakers - Subwoofer Speaker

Removal and Installation

## Removal

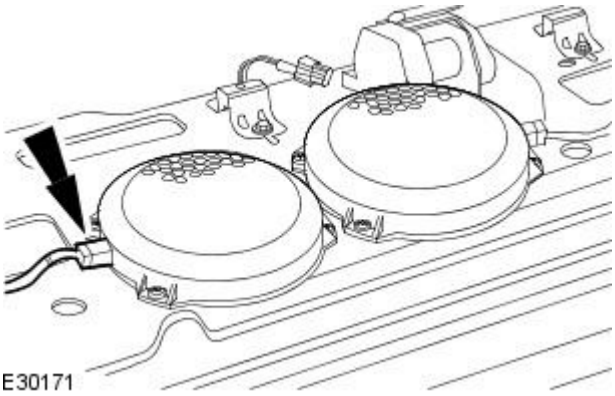


1. Remove the parcel shelf.
   For additional information, refer to Section 501-05 Interior Trim and Ornamentation.
2. Disconnect the subwoofer speaker electrical connector.

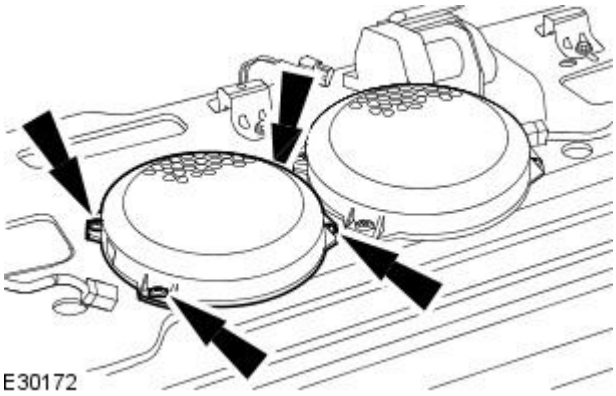


3. Remove the subwoofer speaker.
   - Remove the subwoofer speaker retaining screws.

## Installation

1. To install, reverse the removal procedure.

GETtheMANUALS.org

# Exterior Lighting -

**General Specifications**

| Item | Specification |
|---|---|
| Low beam headlamp bulb - Vehicles with conventional headlamps | H7 |
| Low beam headlamp bulb - Vehicles with xenon headlamps | D2s35W |
| High beam headlamp bulb | HB3 |
| Side repeater lamp bulb | W5W |
| Side marker lamp bulb | W5W |
| Front turn signal lamp bulb | PY21W |
| Rear turn signal lamp bulb | PY21W |
| Front fog lamp bulb | H3 |
| Rear fog lamp bulb | P21W |
| Front side/parking lamp bulb | W5W |
| Rear side/stoplamp bulb | P21/4W |
| Rear side lamp bulb | R5W |
| Reversing lamp bulb | P21W |

GETtheMANUALS.org

# Exterior Lighting - Exterior Lighting

Description and Operation

The headlamp switch is located on the multifunction switch. The switch operates the sidelights, the dipped and main beam lamps,the switch also features an auto lamps function (operates the headlamps when the sunload sensor detects low light levels) and the exit delay variable timer switch (allows the headlamps to stay on for a period of time from ten seconds to two minutes.

Each headlamp assembly consists of two headlamp units, the main beam lamp unit is the inner and the dipped beam, front parking (side) lamp and the turn signal lamp unit is the outer. Access for bulb replacement is from the engine compartment.

The high intensity headlamps (HID), if fitted, consists of a headlamp bulb and ballast fitted to the headlamp. Dynamic levelling sensors (fitted to the front and rear suspension) and a module (fitted behind the glove box).

The license plate lamps are fitted in the license plate housing. Each bulb is accessible after removing the relevant lens.

Each rear lamp assembly incorporates a stop/tail lamp,an auxillary tail lamp, a fog lamp, a reversing lamp and a direction indicator lamp. Access for bulb replacement is from the luggage compartment. The high mounted stoplamp is powered via the stoplamp switch, it is fitted to the parcel shelf and is replaceable as a unit.

The side repeater lamps are located within the front fender.

The sidemarker lamps are located within the rear bumper/front bumper and are supplied as part of a high level bumper assembly, (the side markers are located in the bumper by tangs on one side of the unit and held in position by a spring clip on the other side).

Vehicles built up to 01/2004

The fog lamps are located in recesses in the front bumper. The two retaining screws are located behind the anti-theft cover and splitter vane.

Vehicles built 02/2004 onwards

The fog lamps are located in recesses in the front bumper. The fog lamps are located by three retaining screws, which can be accessed from the rear of the fog lamp.

GETtheMANUALS.org

# Exterior Lighting - Headlamps

Diagnosis and Testing

## Inspection and Verification

1. **1.** Verify the customer concern.
2. **2.** Visually inspect for obvious signs of electrical damage.

**Visual Inspection Chart**

| Electrical |
| --- |
| • Bulb(s)<br>• Photocell(s)<br>• Ballast<br>• Wiring harness/electrical connectors<br>• Fuse(s) |

3. **3.** If an obvious cause for an observed or reported concern is found, correct the cause (if possible) before proceeding to the next step.
4. **4.** If the cause is not visually evident, verify the symptom and refer to the Jaguar Approved Diagnostic System.

GETtheMANUALS.org

# Exterior Lighting - Headlamp Adjustment

General Procedures

**1.** NOTE: All adjustments should be made at room temperature.

Prepare the vehicle for headlamp adjustment.

- Place the vehicle on a level surface.
- Before adjusting the headlamps, check them for faulty lenses, reflectors and blackened bulbs, and install new components as necessary.
- Check the tire pressures and correct as necessary. For additional information, refer to Section 204-04 Wheels and Tires
- The vehicle must be at normal unladen weight.
- Normalize the suspension.

**2.** Reset headlamp adjustment switch.

1. Set the headlamp adjust switch to '0'.

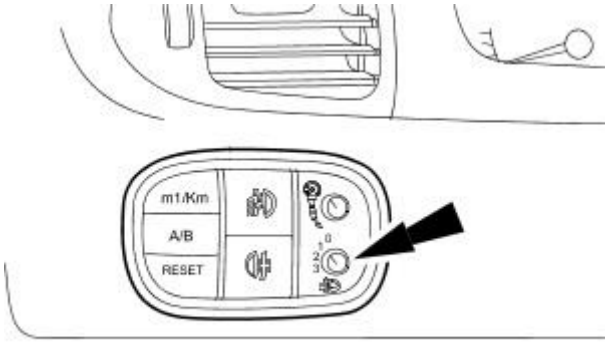


E31135

**3.** Adjust the headlamp using the adjustment bolts.

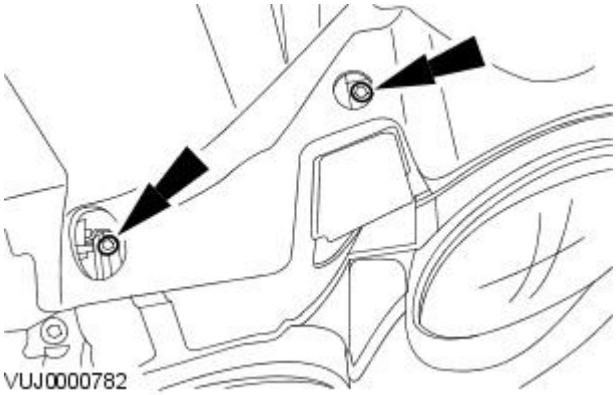

VUJ0000782

GETtheMANUALS.org

# Exterior Lighting - BallastVehicles With: High Intensity Discharge Headlamps

Removal and Installation

## Removal

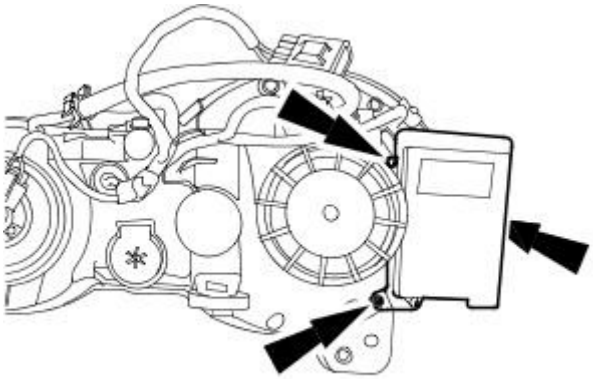

VUJ0005560

1. Remove the headlamp assembly.
   For additional information, refer to Headlamp Assembly in this section.
2. Remove the ballast module.
   - Remove the ballast module retaining screws.

## Installation

1. To install, reverse the removal procedure.

GETtheMANUALS.org

# Exterior Lighting - Front Fog LampVehicles Built From: 02/2004

Removal and Installation

## Removal

1. Remove the radiator splash shield.
   For additional information, refer to: Radiator Splash Shield (501-02 Front End Body Panels, Removal and Installation).
2. Disconnect the electrical connector.

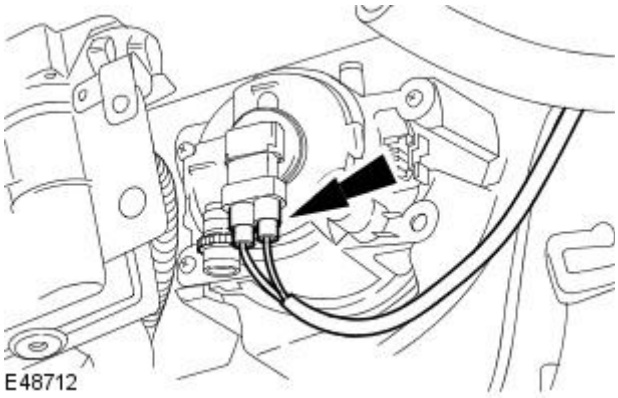


3. Remove the front fog lamp.

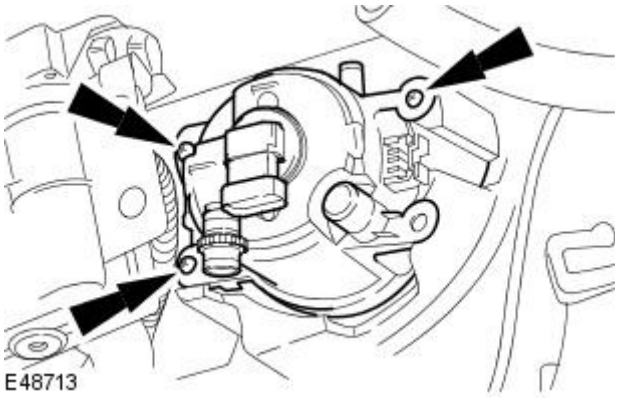


## Installation

1. To install, reverse the removal procedure.

GETtheMANUALS.org

# Exterior Lighting - Front Fog LampVehicles Built Up To: 01/2004

Removal and Installation

## Removal

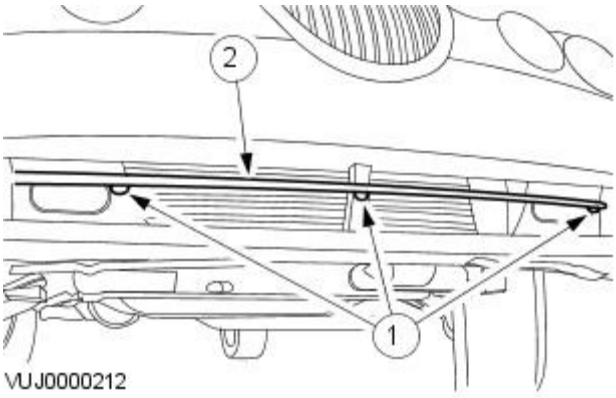


**1.** Remove the air splitter grille.

1. Remove the three clips.
2. Remove the air splitter grille.

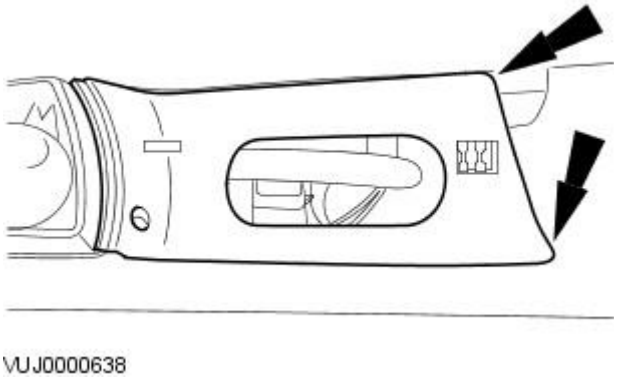


**2.** Remove the front fog lamp anti-theft cover.

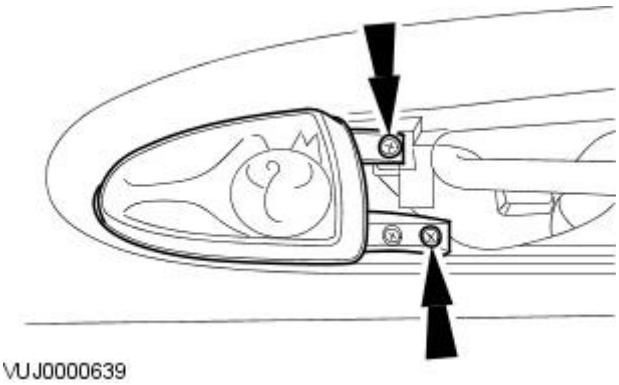


**3.** Remove the front fog lamp.

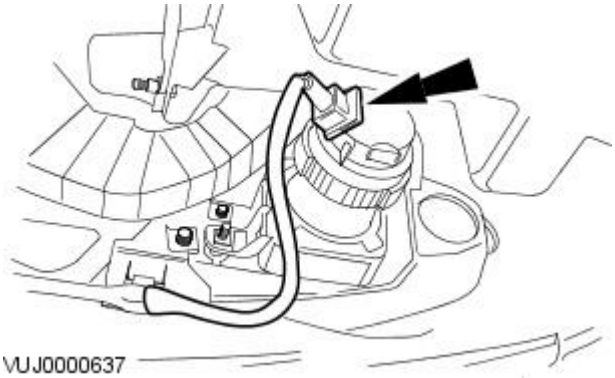


**4.** Disconnect the fog lamp electrical connector.

## Installation

**1.** To install, reverse the removal procedure.

GETtheMANUALS.org

# Exterior Lighting - Headlamp Assembly

Removal and Installation

## Removal

1. Remove the front bumper cover. For additional information, refer to Section 501-19 Bumpers
2. Disconnect the headlamp electrical connector.

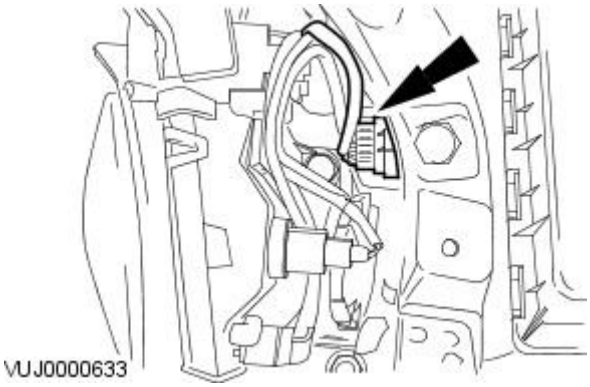


3. Remove lamp assembly retaining bolt.

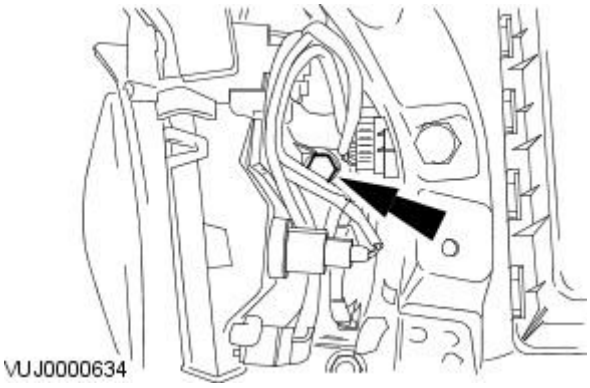


4. Remove lamp assembly.

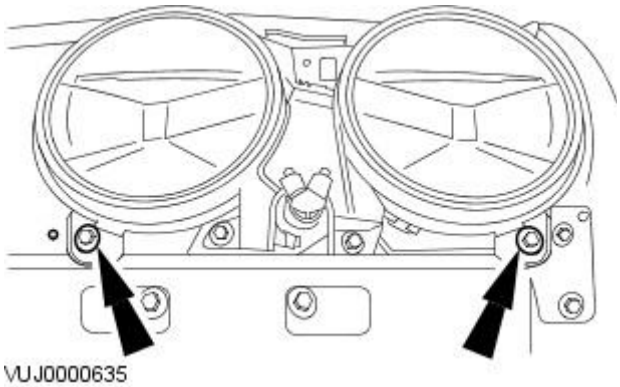


## Installation

1. To install, reverse the removal procedure.
2. Align the headlamp beam.

GETtheMANUALS.org

# Exterior Lighting - Headlamp BulbVehicles With: High Intensity Discharge Headlamps

Removal and Installation

## Removal

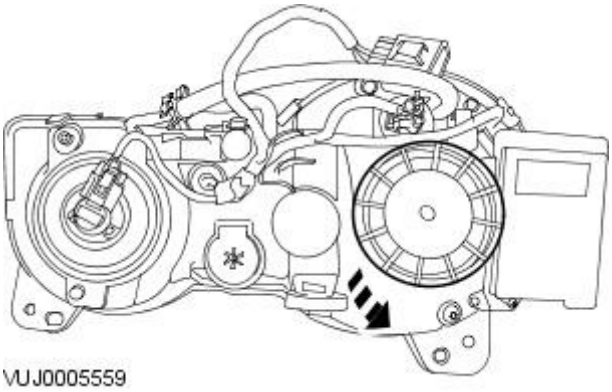

VUJ0005559

1. Remove the headlamp assembly.
   For additional information, refer to Headlamp Assembly in this section.
2. Remove the bulb cover.
   - Turn the bulb cover counterclockwise.

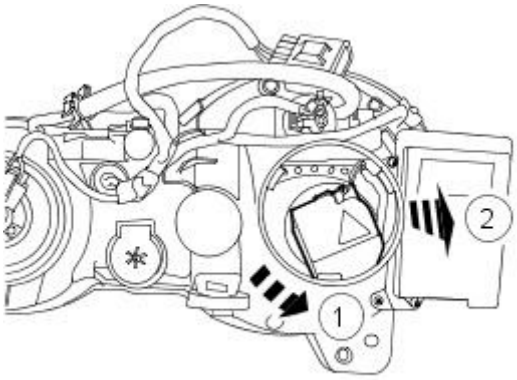


VUJ0005561

3. Remove the bulb.
   - Turn the bulb counterclockwise (electrical connector will disengage automatically).

## Installation

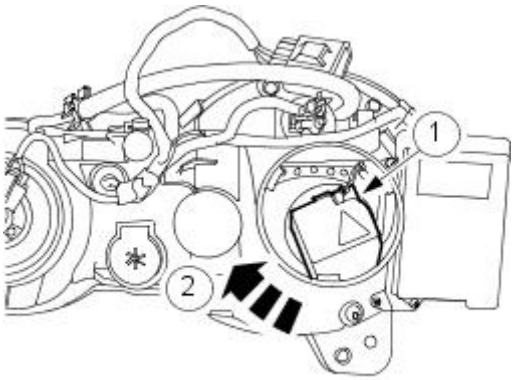


E31134

1. To install, reverse the removal procedure.
   1. Line up the arrows and housing
   2. Turn the bulb clockwise.
2. Check the aim of the dip beam headlamps.

GETtheMANUALS.org

# Exterior Lighting - Headlamp Leveling Module

Removal and Installation

## Removal

1. Remove the glove compartment.
   For additional information, refer to Section 501-12 Instrument Panel and Console.
2. Disconnect the headlamp levelling module electrical connector.

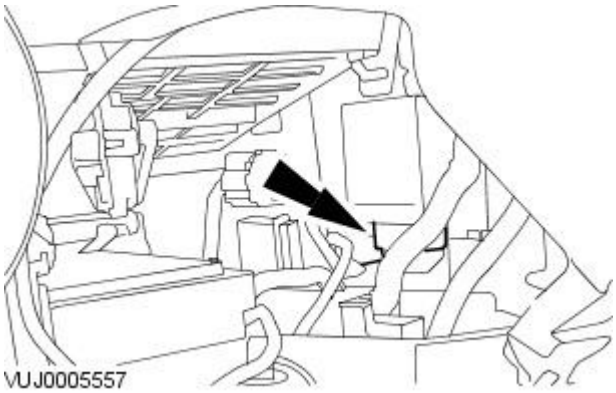


3. Remove the headlamp levelling module.
   - Remove the headlamp levelling module retaining nuts.

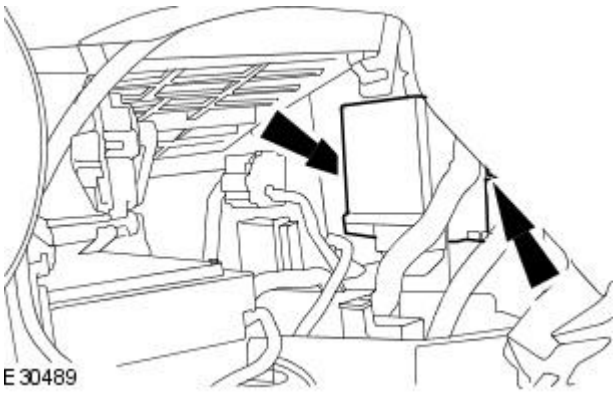


## Installation

1. NOTE: Recalibrate the headlamp levelling module. For additional information, refer to the Jaguar Approved Diagnostic System.

   To install, reverse the removal procedure.

GETtheMANUALS.org

# Exterior Lighting - Headlamp Leveling MotorVehicles With: High Intensity Discharge Headlamps

Removal and Installation

## Removal

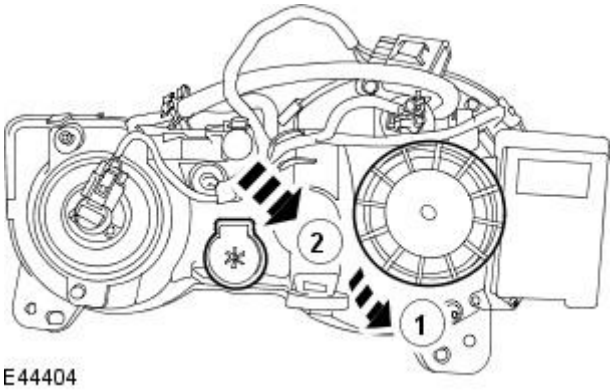


E44404

1. Remove the front headlamp unit.
   For additional information, refer to: Headlamp Assembly (417-01 Exterior Lighting, Removal and Installation).
2. Rotate and detach the headlamp leveling motor.
   1. Remove the high intensity discharge burner cover.
   2. Rotate and detach the headlamp leveling motor.

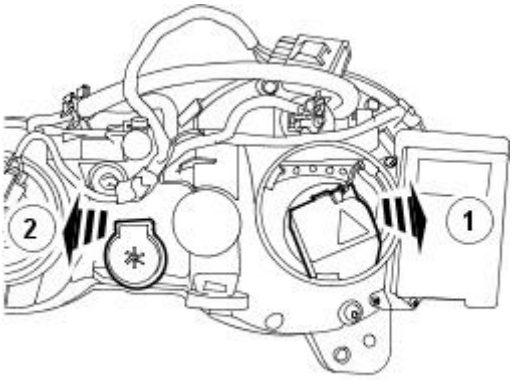


E44405

3. Remove the headlamp leveling motor.
   1. Gently pull the reflector assembly rearwards.
   2. Remove the headlamp leveling motor.
   - Disconnect the headlamp leveling motor electrical connector.

## Installation

1. To install, reverse the removal procedure.
   - Make sure the internal pivot is located in the slide.
2. Check the headlamp adjustment.
   For additional information, refer to: Headlamp Adjustment (417-01 Exterior Lighting, General Procedures).

GETtheMANUALS.org

# Exterior Lighting - Headlamp Leveling MotorVehicles Without: High Intensity Discharge Headlamps

Removal and Installation

## Removal

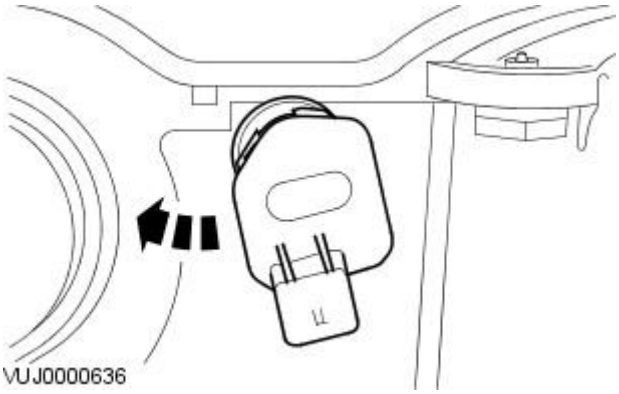


1. Remove the front headlamp unit. For additional information, refer to in this Lamp Assembly—Headlamp
2. Rotate and remove the headlamp adjuster cell.
   - Make sure the internal pivot is disengaged from the slide.

## Installation

1. To install, reverse the removal procedure.
   - Make sure the internal pivot is located in the slide.

GETtheMANUALS.org

# Exterior Lighting - Headlamp Leveling Sensor

Removal and Installation

## Removal

1. Remove the right-hand front wheel and tire assembly.
   For additional information, refer to Section 204-04 Wheels and Tires.
2. Disconnect the headlamp leveling sensor electrical connector.

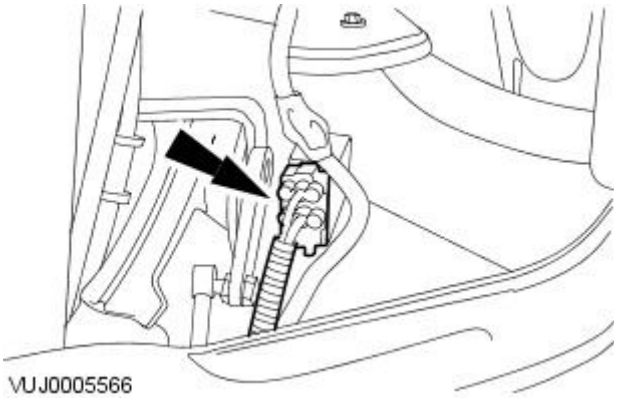


3. Remove the headlamp leveling sensor pivot nut.

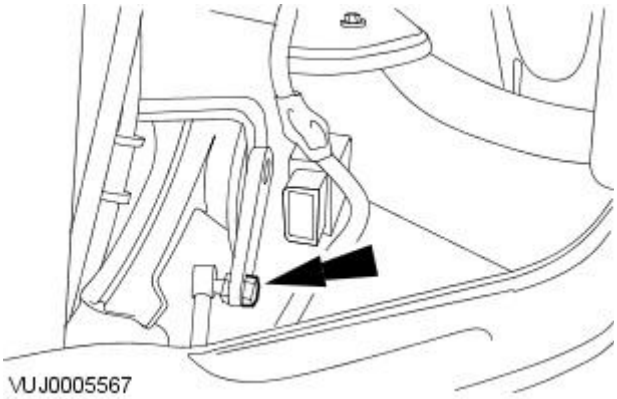


4. Detach the headlamp leveling sensor.
   - Remove the headlamp leveling sensor retaining nuts.

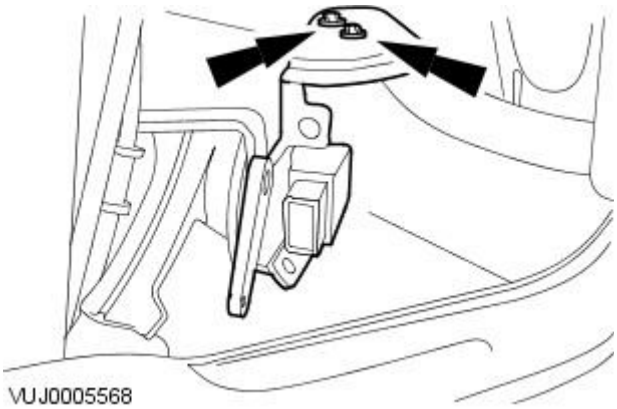


## Installation

1. To install, reverse the removal procedure.

GETtheMANUALS.org

# Exterior Lighting - Headlamp Leveling Switch

Removal and Installation

## Removal

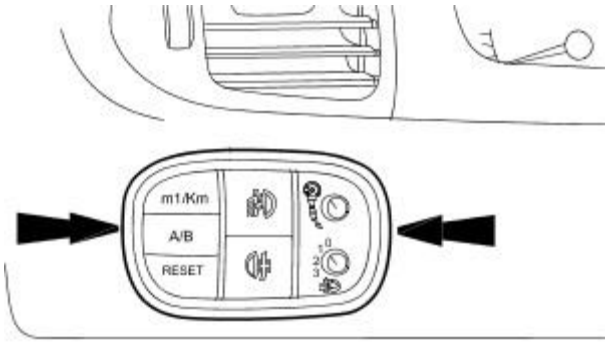


E30510

1. Detach the headlamp levelling switch.

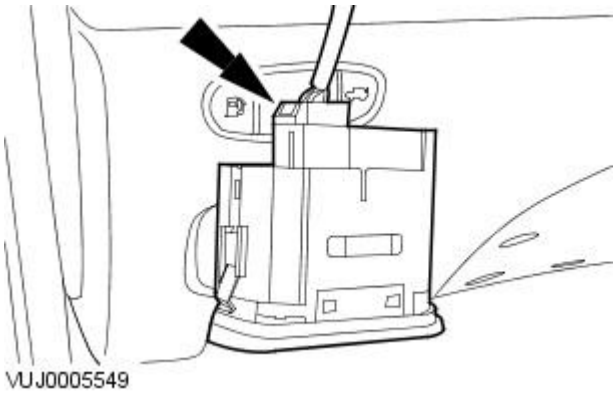

VUJ0005549

2. Remove the headlamp levelling switch.
   - Disconnect the electrical connector.

## Installation

1. To install, reverse the removal procedure.

GETtheMANUALS.org

# Exterior Lighting - Rear Lamp AssemblyVehicles Built From: 02/2004

Removal and Installation

## Removal

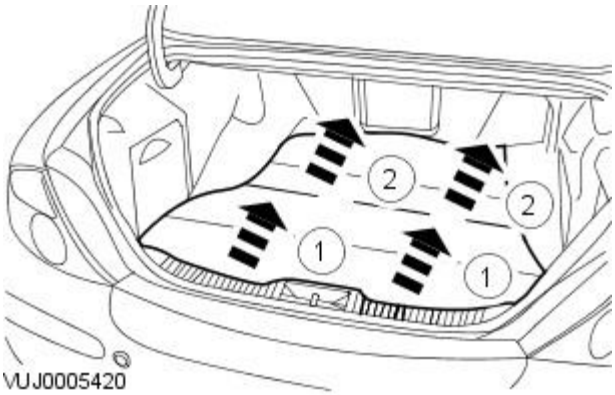


**1.** Reposition the luggage compartment floor covering.

1. Detach the luggage compartment floor covering.
2. Reposition the luggage compartment floor covering.

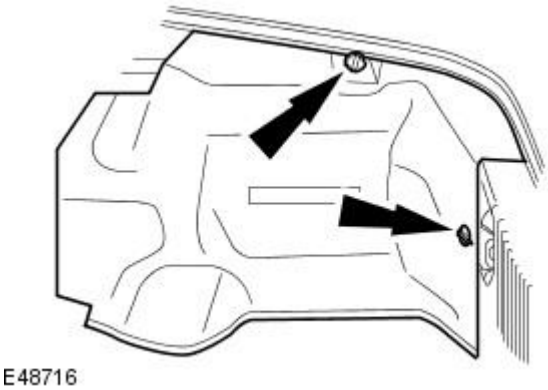


**2.** Detach luggage compartment side trim panel.

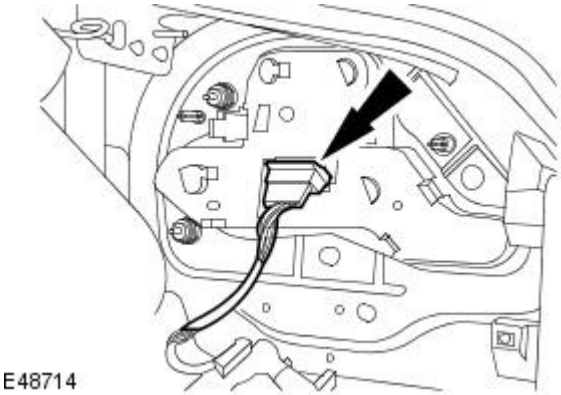


**3.** Disconnect the electrical connector.

GETtheMANUALS.org

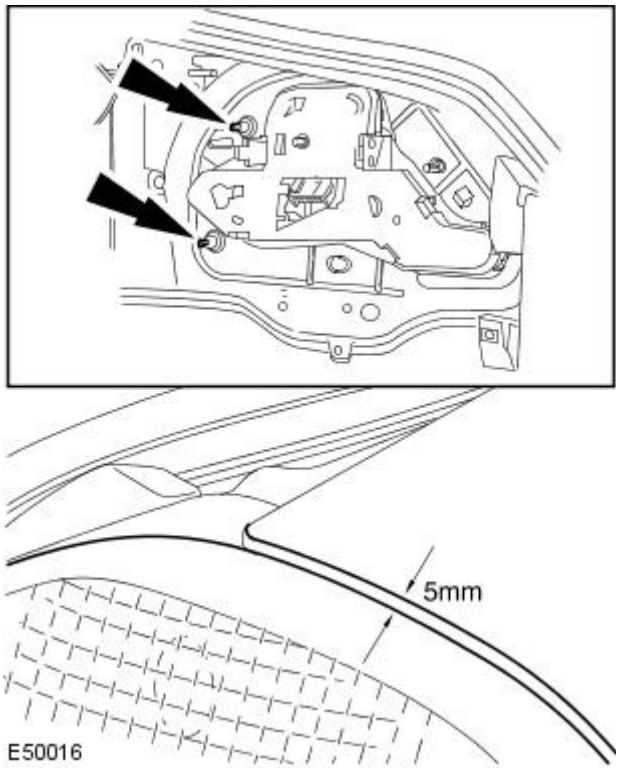


4. Adjust the rear lamp assembly adjustment screws to give a minimum clearance of 5 mm between the rear lamp assembly and the body.

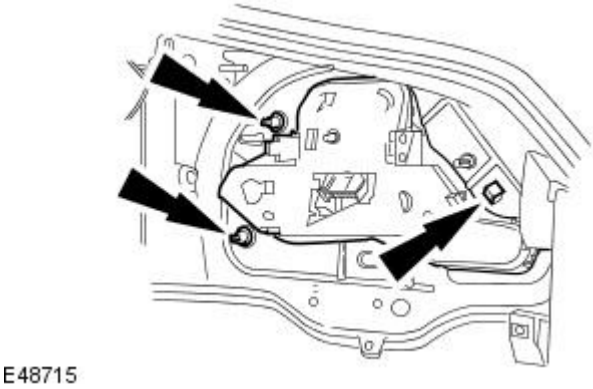


5. Remove the rear lamp assembly.

## Installation

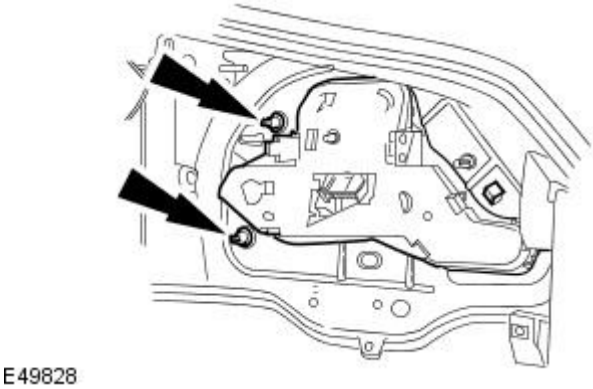


1. Install the rear lamp assembly.
   - Tighten to 5 Nm.

GETtheMANUALS.org

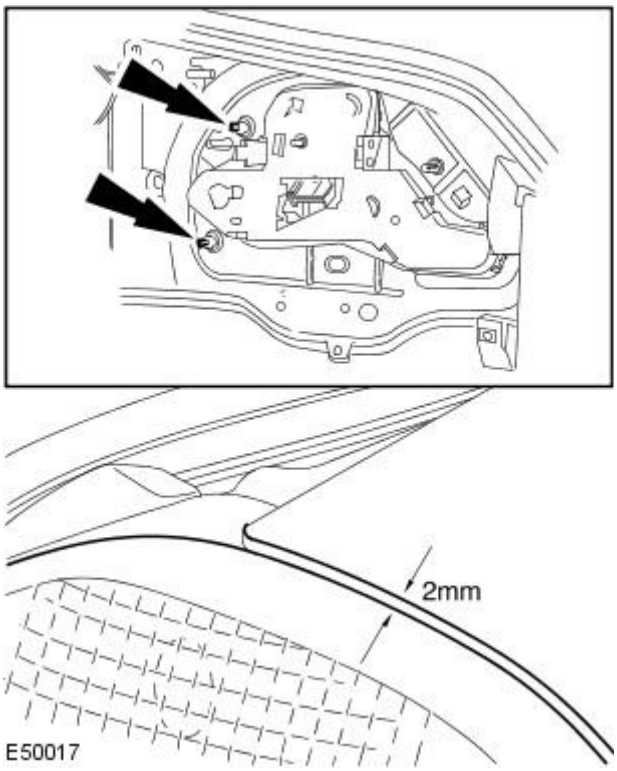


2. Adjust the rear lamp assembly adjustment screws to give a clearance of 2 mm between the rear lamp assembly and the body.

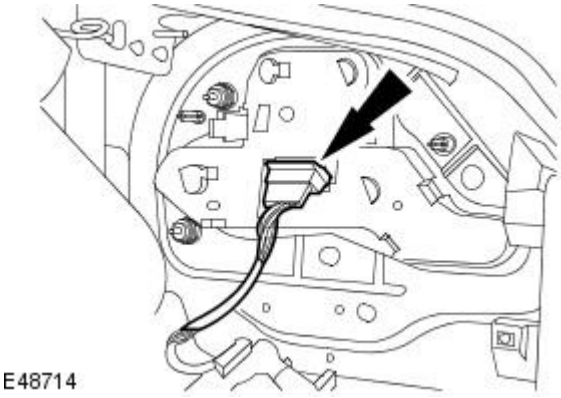


3. Connect the electrical connector.

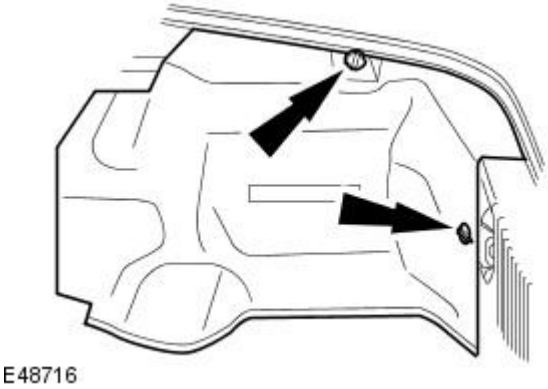


4. Attach luggage compartment side trim panel.

5. Reposition the luggage compartment floor covering.

GETtheMANUALS.org

# Exterior Lighting - Rear Lamp AssemblyVehicles Built Up To: 01/2004

Removal and Installation

## Removal

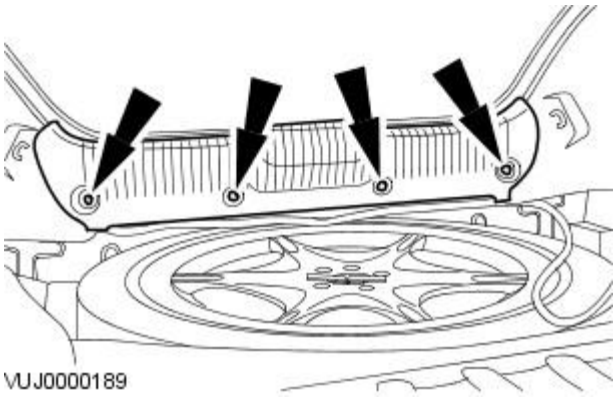


**1.** Remove the luggage compartment rear trim panel.

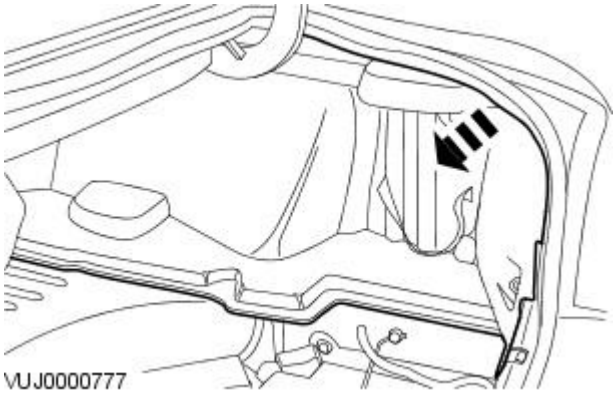


**2.** Detach luggage compartment side trim panel.

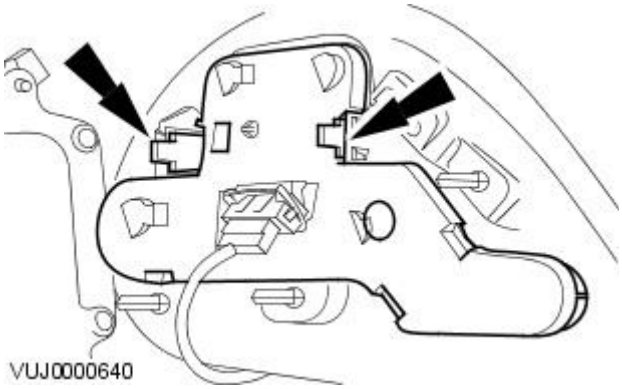


**3.** Detach the rear lamp assembly bulb holder.

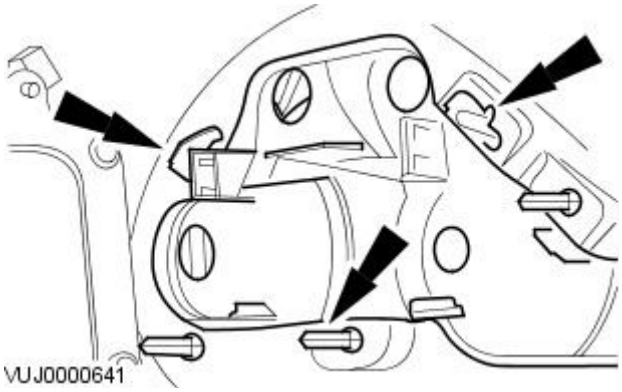


**4.** Remove the rear lamp assembly.

## Installation

**1.** To install, reverse the removal procedure.

GETtheMANUALS.org

# Exterior Lighting - Stoplamp Switch

Removal and Installation

## Removal

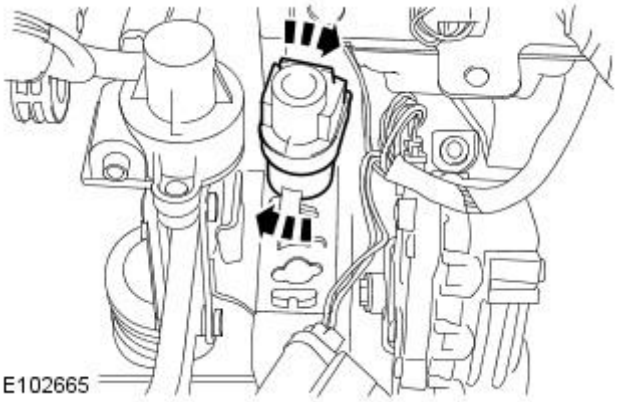


1. Remove the brake pedal position (BPP) switch.
   For additional information, refer to: Brake Pedal Position (BPP) Switch (303-14C Electronic Engine Controls - 2.7L V6 - TdV6, Removal and Installation).
2. Release the stoplamp switch.
   - Rotate the stoplamp switch 45 degrees clockwise.

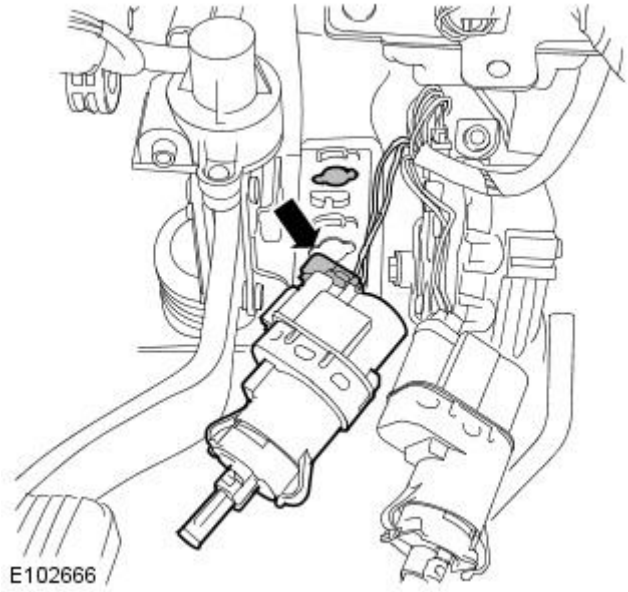


3. Remove the stoplamp switch.
   - Disconnect the electrical connector.

## Installation

1. CAUTIONS:

   Make sure that the brake pedal remains in the rest position during this procedure.

   The bracket is keyed to avoid incorrect orientation. Failure to correctly align the switch may result in damage to the vehicle.

   Install the stoplamp switch.
   - Locate the stoplamp switch in the bracket.
   - Rotate the stoplamp switch 45 degrees counter-clockwise.
2. Connect the electrical connector.
3. Install the BPP switch.
   For additional information, refer to: Brake Pedal Position (BPP) Switch (303-14C Electronic Engine Controls - 2.7L V6 - TdV6, Removal and Installation).

GETtheMANUALS.org

# Interior Lighting - Interior Lighting

Description and Operation

The interior lighting system consists of the following components:

- One front interior lamp and two map reading lamps.
- Front footwell lamps
- Two rear interior lamps with integral reading lamps.
- Front/rear door puddle lamps
- Glove compartment lamp.
- Vanity mirror lamps.
- Two luggage compartment lamps.

The automatic operation of the interior lights is controlled by the front electronics module (FEM). Pressing the interior light switch in the overhead console switches the interior lighting control from automatic to ON position. When the switch is in the ON position if any of the doors are open, none of the individual interior lamps can be turned off.

In the AUTOMATIC position, when the interior lights have faded out , each lamp can be switched on or off by pressing the associated switch. Also in this position, if a door is open when the vehicle is driven the interior lighting will fade off and then fade back on again when the vehicle slows down.

With the switch AUTOMATIC position the following times apply to the interior lights fading out assuming lights on.

The interior lamp is incorporated in the roof console.
For additional information, refer to Section 501-12 Instrument Panel and Console.

| Condition | Fade out time |
|---|---|
| Open any door with key not in ignition, close door | Lamps will fade out after 20 seconds |
| Any door ajar with the vehicle acclerating between 0-10kph | lamps will fade out above 5kph |
| With engine in RUN position and open any door, close door | Lamps will fade out immediately |
| Open any door, switch ignition to the RUN position, close door | Lamps will fade out immediately |

GETtheMANUALS.org

# Interior Lighting - Interior Lighting

Diagnosis and Testing

1. **1.** Verify the customer concern.
2. **2.** Visually inspect for obvious signs of electrical damage.

**Visual Inspection Chart**

| Electrical |
| --- |
| • Fuse(s)<br>• Bulb(s)<br>• Wiring harness<br>• Loose or corroded connector(s)<br>• Accessories<br>• Switch(es) |

3. **3.** If an obvious cause for an observed or reported concern is found, correct the cause (if possible) before proceeding to the next step.
4. **4.** If the cause is not visually evident, verify the symptom and refer to the Jaguar Approved Diagnostic System.

GETtheMANUALS.org

# Daytime Running Lamps (DRL) - Daytime Running Lamps (DRL)

Description and Operation

DRL use the full intensity low beam headlamps which are permanently illuminated when the vehicle is being driven. DRL are used in a number of markets and there are two systems to cover these markets.

## DRL CANADIAN MARKET

DRL for this market use full intensity low beam headlamps. The side marker lamps and license plate lamps will be on, but instrument cluster illumination will be off. DRL are active when the following parameters are met:

- Parking brake is off on vehicles with manual transmission or PARK is not selected on vehicles with automatic transmission
- Ignition switch is in the ignition position (II)
- The central junction box receives an engine running signal
- The lighting control switch is in the off or side lamps position. If the switch is in the 'AUTO' position the DRL will be active when the light sensor is not operating the headlamps using the auto lamps function.

If the above conditions are met, the low beam headlamps are illuminated by a Pulse Width Modulated signal (PWM) for the vehicles fitted with halogen headlamps (when the average voltage exceeds 14V). Vehicles with High Intensity Discharge (HID) headlamps operate the dip beam at normal supply voltage.

The front park lamps (including front side markers) and low beam lamps are illuminated from the Front Electronic Module (FEM), the rear park lamps (including the rear side markers and the license plate lamps) are illuminated by the Rear Electronic Module (REM).

If the lighting control switch is moved to the side lamp or headlamp positions or the auto lamps feature has activated the headlamps, DRL are deactivated and normal side lamp and headlamp functionality is operational.

• NOTE: When DRL are active, the headlamp flash function using the left hand steering column multifunction switch will operate normally. The high beam headlamp function using the left hand steering column stalk switch will be deactivated.

When the parking brake is applied on manual transmission vehicles or the selector lever is in the PARK position on automatic transmission vehicles, DRL are turned off. This is to reduce battery discharge during long periods of engine idling in cold climate conditions. When the parking brake is released or the selector lever is moved from the PARK position, normal DRL functionality is restored.

## DRL DENMARK, HOLLAND, NORWAY, SWEDEN, FINLAND AND POLAND

• NOTE: DRL for Poland is on vehicles from 2008MY.

DRL for these markets use full intensity low beam headlamps. Side lamps and license plate lamps will be on, but instrument cluster illumination will be off. DRL are active when the following parameters are met:

- Ignition switch is in the ignition position (II)
- The central junction box receives an engine running signal
- The lighting control switch is in the off position. If the switch is in the 'AUTO' position the DRL will be active when the light sensor is not operating headlamps using the auto lamps function.

If the above conditions are met, the low beam headlamps are illuminated by a Pulse Width Modulated signal (PWM) for the vehicles fitted with halogen headlamps (when the average voltage exceeds 14V). Vehicles with High Intensity Discharge (HID) headlamps operate the dip beam at normal supply voltage.

The front park lamps (including front side markers) and low beam lamps are illuminated from the Front Electronic Module (FEM), the rear park lamps (including the rear side markers and the license plate lamps) are illuminated by the Rear Electronic Module (REM).

If the lighting control switch is moved to the side lamp or headlamp positions or the auto lamps feature has activated the headlamps, DRL are deactivated and normal side lamp and headlamp functionality is operational.

• NOTE: When DRL are active, the headlamp flash function using the left hand steering column multifunction switch will operate normally. The high beam headlamp function using the left hand steering column stalk switch will be deactivated.

GETtheMANUALS.org

Published: 11-May-2011

# Daytime Running Lamps (DRL) - Daytime Running Lamps (DRL)

Diagnosis and Testing

1. **1.** Verify the customer concern.
2. **2.** Visually inspect for obvious signs of electrical damage.

**Visual Inspection Chart**

| Electrical |
| --- |
| • Fuse(s)<br>• Bulb(s)<br>• Switch(es)<br>• Electrical connector(s)<br>• Wiring Harness |

3. **3.** If an obvious cause for an observed or reported concern is found, correct the cause (if possible) before proceeding to the next step.
4. **4.** If the cause is not visually evident, verify the symptom and refer to the Jaguar Approved Diagnostic System.

GETtheMANUALS.org

# Module Communications Network - Communications Network

Description and Operation

## Vehicles built up to 01/2004

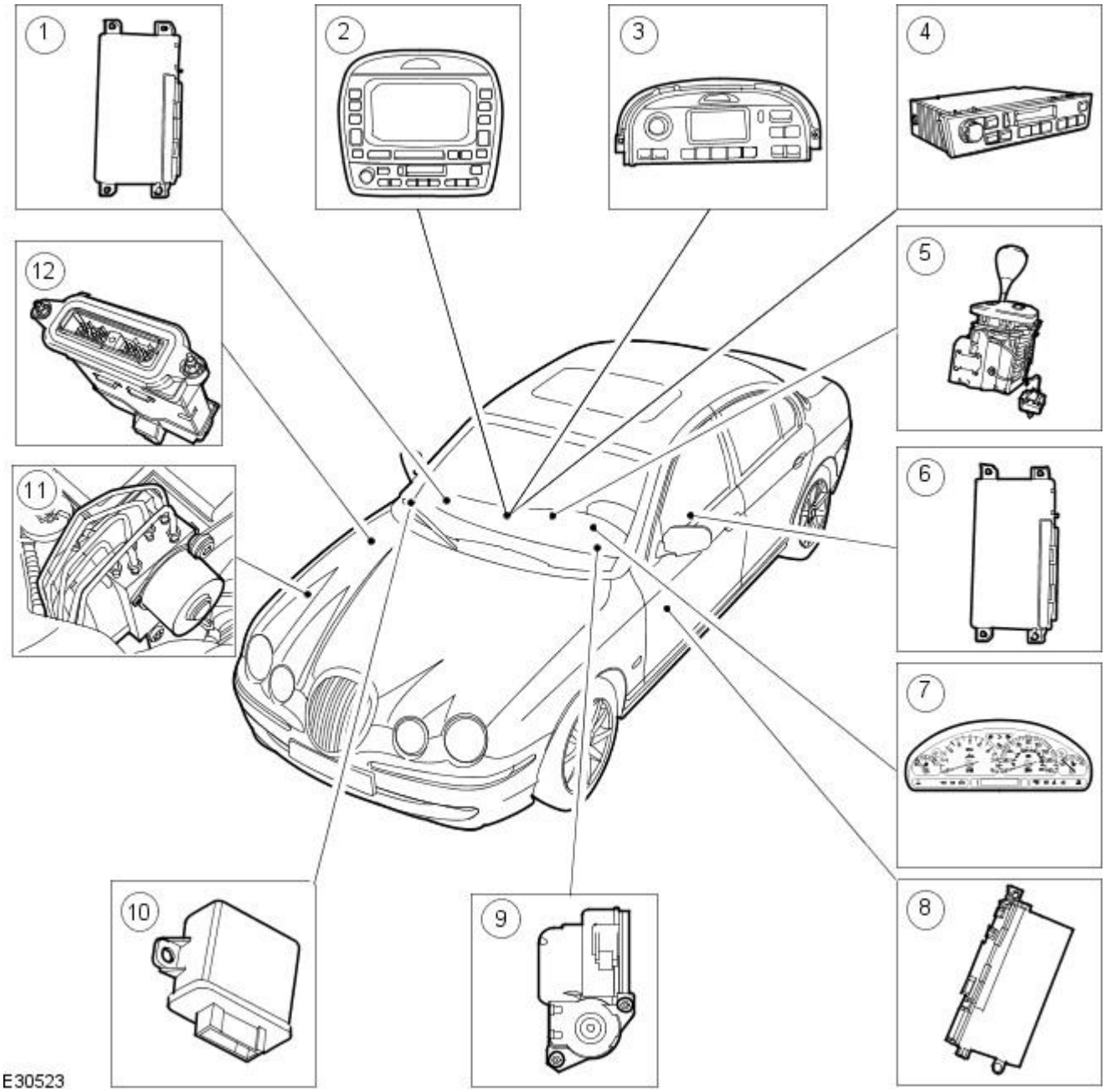


| Item | Part Number | Description |
|---|---|---|
| 1 | — | Remote climate control module (RCCM) |
| 2 | — | Climate control module (vehicles fitted with telematics) |
| 3 | — | Climate control assembly |
| 4 | — | Audio unit |
| 5 | — | Transmission selector lever |
| 6 | — | Driver seat module (DSM) |
| 7 | — | Instrument cluster |
| 8 | — | Drivers door module (DDM) |
| 9 | — | Steering column lock actuator (SCLA) |
| 10 | — | High intensity discharge module (HID) |
| 11 | — | Anti-lock brake (ABS) control module |
| 12 | — | Engine control module (ECM) |

GETtheMANUALS.org

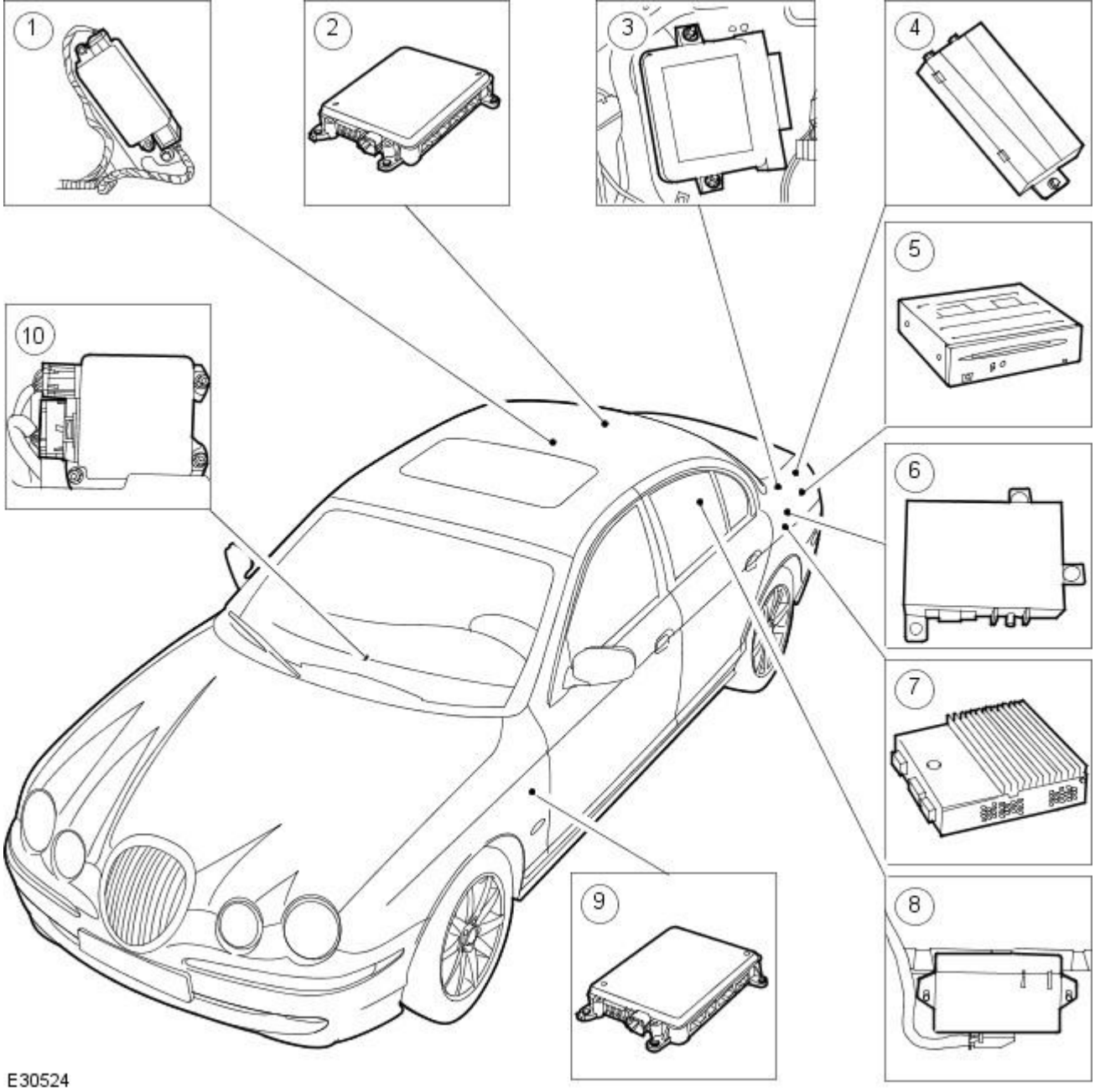


| Item | Part Number | Description |
|---|---|---|
| 1 | - | Electronic parking brake module |
| 2 | - | Rear electronic module (REM) |
| 3 | - | Adaptive damping module |
| 4 | - | Voice activated control module |
| 5 | - | Compact disc changer |
| 6 | - | Vehicle emergency monitor system (VEMS) module |
| 7 | - | Amplifier |
| 8 | - | Parking aid module |
| 9 | - | Front electronic module (FEM) |
| 10 | - | Restraints control module (RCM) |

**Vehicles built 02/2004 onwards**

GETtheMANUALS.org

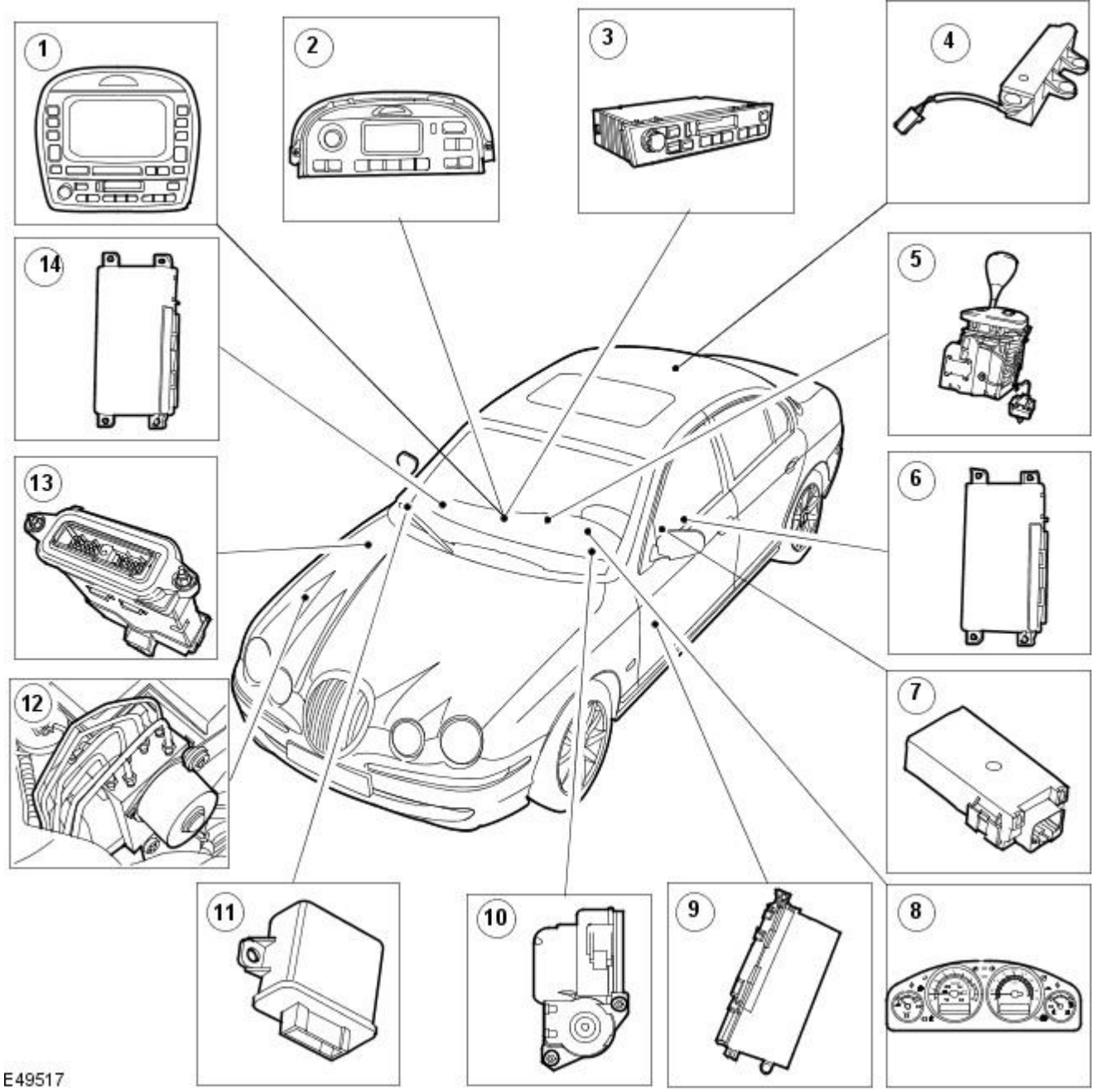


| Item | Part Number | Description |
|---|---|---|
| 1 | — | Climate control module (vehicles fitted with telematics) |
| 2 | — | Climate control assembly |
| 3 | — | Audio unit |
| 4 | — | Rooker |
| 5 | — | Transmission selector lever |
| 6 | — | Driver seat module (DSM) |
| 7 | — | Heated seat module (HSM) |
| 8 | — | Instrument cluster |
| 9 | — | Drivers door module (DDM) |
| 10 | — | Steering column lock actuator (SCLA) |
| 11 | — | High intensity discharge module (HID) |
| 12 | — | Anti-lock brake (ABS) control module |
| 13 | — | Engine control module (ECM) |
| 14 | - | Remote climate control module (RCCM) |

GETtheMANUALS.org

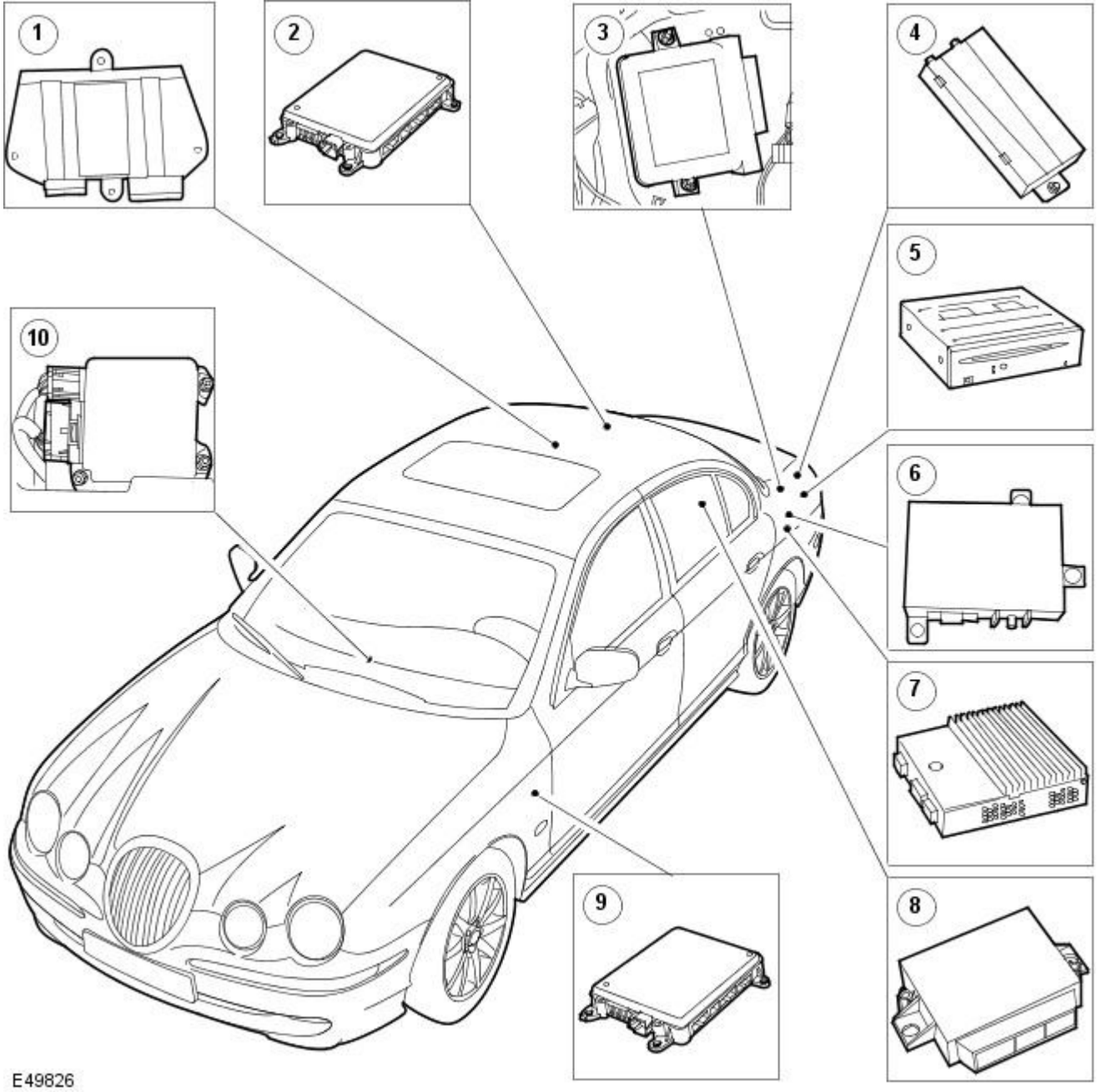


| Item | Part Number | Description |
|---|---|---|
| 1 | - | Electronic parking brake module |
| 2 | - | Rear electronic module (REM) |
| 3 | - | Adaptive damping module |
| 4 | - | Voice activated control module |
| 5 | - | Compact disc changer |
| 6 | - | Vehicle emergency monitor system (VEMS) module |
| 7 | - | Amplifier |
| 8 | - | Parking aid module |
| 9 | - | Front electronic module (FEM) |
| 10 | - | Restraints control module (RCM) |

GETtheMANUALS.org

# Module Communications Network - Communications NetworkVIN Range: M45255->N52047

Diagnosis and Testing

## Principles of Operation

The vehicle has four module communication networks. Only three of these networks are connected to the diagnostic connector. The standard corporate protocol (SCP) and controller area network (CAN), which are an unshielded twisted pair cable: data bus plus and data bus minus and the International Standard Organization (ISO) 9141 communication network, which is a single wire network. The digital data bus (D2B), which is a fibre optic ring network can only be accessed through the SCP network. The SCP, CAN and ISO networks can be connected to the Jaguar Approved Diagnostic System by one connector called the diagnostic connector. This makes troubleshooting these systems easier by allowing one smart tester to be able to diagnose and control any module on the three networks from one connector. Diagnosis of the D2B network is through the entertainment system audio unit. The diagnostic connector is located on the driver's side, under the instrument panel.

The ISO 9141 communications network does not permit inter-module communications. When the Jaguar Approved Diagnostic System communicates to modules on the ISO 9141 communication network, the diagnostic system must ask for all information; the modules initiate communications.

The SCP communication network remains operational even with severing of one of the bus wires. Communications will also continue if one of the bus wires is shorted to ground or battery positive voltage (B+), or if some, but not all, termination resistors are lost.

Unlike the SCP communication network, the ISO 9141 communication network will not function if the wire is shorted to ground or battery positive voltage (B+). Also, if one of the modules on the ISO 9141 network loses power or shorts internally, communication to that module will fail.

The anti-lock brake system (ABS), traction control (TC) and dynamic stability control (DSC) module is connected to the CAN communication network. It controls the brake pressure to the four wheels to keep the vehicle under control while braking. This module also communicates with the yaw and steering wheel angle sensors to help in sensing a loss of vehicle control. For additional information,
REFER to Section 206-09 Anti-Lock Control - Stability Assist.

The entertainment system audio unit is connected to the SCP communication network and also to the D2B network. The D2B communicates with the compact disc and the cellular phone transceiver and the amplifier. For additional information on the compact disc,
REFER to Section 415-00 Information and Entertainment System - General Information.
For additional information on the cellular phone,
REFER to Section 419-08 Cellular Phone.

The climate control module is connected to the CAN communication network. The climate control assembly automatically maintains a selected temperature for the interior of the vehicle. For additional information,
REFER to Section 412-00 Climate Control System - General Information.

The instrument cluster (IC) is connected to the CAN and SCP communication networks. The instrument cluster displays information received on the SCP including speedometer, odometer, fuel, and message center warnings. The instrument cluster displays information received on the CAN including ABS, air conditioning, transmission and engine condition. The instrument cluster also controls the passive anti-theft system (PATS), and the steering column lock actuator (SCLA). For instrument cluster operation,
REFER to Section 413-00 Instrument Cluster and Panel Illumination.
For PATS operation, REFER to Section 419-01A Anti-Theft - Active / 419-01B Anti-Theft - Passive. For the steering column lock actuator operation,
REFER to Section 211-04 Steering Column.
The instrument cluster, steering column lock actuator and the engine control module (ECM) are all configured together. Replacing one requires the others to be re-configured.

The front electronic module (FEM) is connected to the SCP communication network. The FEM controls both interior and front exterior lighting, hazard and indicator functions, adjustable pedals, levels (low brake/washer fluid, low oil pressure) and memory functions. For additional information
REFER to Section 419-10 Multifunction Electronic Modules.

The ECM is connected to both the CAN and ISO 9141 communication networks. The ECM controls the engine performance, electronic ignition, emission controls, speed control, and on board diagnostics. For additional information REFER to Section 303-14A Electronic Engine Controls / 303-14B Electronic Engine Controls / 303-14C Electronic Engine Controls. Or REFER to Section 303-14A Electronic Engine Controls / 303-14B Electronic Engine Controls / 303-14C Electronic Engine Controls.

The vehicle emergency message system module (VEMS) is connected to the D2B communication network. The module allows a user to request emergency assistance (police, ambulance, fire, recovery) or directions to a desired location at the touch of a button. Also, if any of the vehicle's airbags are deployed while the VEMS system is powered ON, the system automatically issues a call for emergency assistance. For additional information, refer to
REFER to Section 419-05 Telematics.

The restraint control module (RCM) is connected to the ISO 9141 communication network. The RCM controls the deployment of the air bags based on sensor input. For additional information; REFER to Section 501-20A Safety Belt System / 501-20B Supplemental Restraint System.

The voice activated control module (VACM) is connected to the D2B communication network. This allows the user to select functions by giving a nine voice command. The VACM sends the command information by D2B to the correct module or audio unit.

The navigation control (NAV) module is connected to the SCP network. The navigation control module receives inputs from the GPS antenna and various other sensors. For additional information, refer to
REFER to Section 419-07 Navigation System.

The driver door module (DDM) is connected to the SCP communication network. The module controls many functions including power windows, power locks, and keyless remote entry. The DDM also communicates with the driver seat module (DSM) to control power seat and mirror memory. For additional information,
REFER to Section 419-10 Multifunction Electronic Modules.

The driver seat module (DSM) is connected to the SCP communication network. The DSM controls the driver power seat. The module also communicates with the DDM to control the driver seat memory and both outside memory mirror functions. For additional information,
REFER to Section 419-10 Multifunction Electronic Modules.

The rear electronic control module (REM) is connected to the SCP network. The REM controls the exterior rear lamps, the heated rear window, inertia switch operation, trailer functionality, fuel pump driver circuit and luggage compartment lid. For additional information
REFER to Section 419-10 Multifunction Electronic Modules.

GETtheMANUALS.org

The steering column lock actuator (SCLA) is connected to the SCP communication network. The module controls locking of the steering column and is only equipped on vehicles with manual transmissions. It is controlled by the instrument cluster. For additional information REFER to Section 211-05 Steering Column Switches.

The adaptive damping module is connected to the SCP communication network. The module calculates the movement of the vehicle and adjusts the suspension accordingly. For additional information,
REFER to Section 204-05 Vehicle Dynamic Suspension.

The electronic park brake (EPB) module is connected to the SCP communication network. The electronic park brake module controls the electrical functions of the park brake system. For additional information,
REFER to Section 206-05 Parking Brake and Actuation.

The high intensity discharge (HID) headlamp module is connected to the ISO 9141 communication network and also the CAN communication network. The high intensity discharge headlamp module regulates the lamp output. For additional information
REFER to Section 417-01 Exterior Lighting.

The transmission selector lever (JGM) is connected to the CAN communication network. The transmission selector lever communicates with the transmission control module (TCM) and also perform its own internal fault monitoring. For additional information,
REFER to Section 307-05 Automatic Transmission/Transaxle External Controls.

The transmission control module (TCM) is connected to the CAN communication network. The TCM controls the automatic gearbox control solenoids as well as communicating with other powertrain components on the CAN communication network. The TCM also provides for legislated diagnostics. For additional information,
REFER to Section 307-01 Automatic Transmission/Transaxle.

The reverse parking aid module is connected to the ISO 9141 communication network. The reverse parking aid module controls the electrical components of the parking aid system.

## Inspection and Verification

1. **1.** Verify the customer concern by operating the system.
2. **2.** Visually inspect for obvious signs of mechanical, electrical or optical damage.

**Visual Inspection Chart**

| Electrical |
|---|
| • Fuse(s)<br>• Wiring harness<br>• Electrical connection(s)<br>• Anti-lock brake (ABS), traction control (TC) and dynamic stability control (DSC) control module<br>• Entertainment system audio unit<br>• Compact disc changer<br>• Amplifier<br>• Climate control module<br>• Instrument cluster (IC)<br>• Front electronic module (FEM)<br>• Engine control module (ECM)<br>• Vehicle emergency monitor system (VEMS)<br>• Restraints control module (RCM)<br>• Voice activated control module (VACM)<br>• Navigation control module (NC)<br>• Driver door module (DDM)<br>• Driver seat module (DSM)<br>• Rear electronic module (REM)<br>• Steering column lock module (SCLM)<br>• Adaptive damping module<br>• Electronic parking brake module<br>• High intensity discharge headlamp module<br>• Transmission selector lever<br>• Transmission control module (TCM)<br>• Parking aid module<br>• Intrusion sensor module |

**Visual Inspection Chart**

| Optical |
|---|
| • Routing of fibre optic harnesses<br>• Correct engagement of optical connectors<br>• Correct placement of optical connectors. (Ring order)<br>• Damage to fibre. (chafing, abrasion, kinking, cuts, etc)<br>• Correct assembly of optical connectors. (Backout, etc) |

3. **3.** If the concern remains after the inspection, connect the approved Jaguar diagnostic system to the data link connector (DLC) located beneath the instrument panel and select the vehicle to be tested from diagnostic system menu. If the diagnostic tester does not communicate with the vehicle:
   - check that the program card is properly installed.
   - check that the correct version of the program card is installed.
   - check the connections to the vehicle.
   - check the ignition switch position.
   - check the vehicle battery condition.
4. **4.** If the concern is not visually evident, verify the symptom and refer to the Symptom Chart.

## Symptom Chart

• NOTE: Network DTCs may be set by an error, or communications failure in the network. Individual DTCs are in the table, alongside their respective modules, but may also be set by a combination of factors affecting the network, which would result in multiple DTCs being set for one error, or, as in the case of an open circuit, no DTC being set.

**Symptom Chart**

GETtheMANUALS.org

| Symptom | Possible Sources | Action |
|---|---|---|

| | | |
|---|---|---|
| DTC; P1637. P1799, E521, E516: The module Does Not Respond to the Jaguar approved diagnostic system — anti-lock brake control module or DSC. | * Wire or connection in the control area network (CAN).<br>* anti-lock brake control module or DSC. | * GO to Pinpoint Test A. |
| DTC; P1699, E518, E516: The module Does Not Respond to the Jaguar approved diagnostic system — Climate control module. | * Wire or connection in the CAN network.<br>* DATC. | * GO to Pinpoint Test B. |
| DTC; P1638, P1798, E520, E516: The module Does Not Respond to the Jaguar approved diagnostic system — instrument cluster (IC). | * Wire or connection in the SCP network.<br>* Wire or connection in the CAN network.<br>* IC. | * GO to Pinpoint Test C. |
| DTC; E516, P1797, P1642, The module Does Not Respond to the Jaguar approved diagnostic system — ECM. | * Wire or connection in the CAN network.<br>* ECM. | * GO to Pinpoint Test D. |
| DTC; P1643, P1796, E522: The module Does Not Respond to the Jaguar approved diagnostic system — transmission control module (TCM). | * Wire or connection in CAN network.<br>* TCM and main control valve body. | * GO to Pinpoint Test E. |
| P1603. TCM EEPROM failure. | * Battery discharged. TCM has lost it's adaptive values.<br>* Water ingress into TCM or connections.<br>* TCM failure. | * GO to Pinpoint Test F. |
| The module Does Not Respond to the Jaguar approved diagnostic system — Electronic park brake (EPB) module. | * Wire or connection in the SCP network.<br>* EPB module. | * GO to Pinpoint Test G. |
| The module Does Not Respond to the Jaguar approved diagnostic system — Instrument cluster (IC). | * Wire or connection in the SCP network.<br>* IC. | * GO to Pinpoint Test H. |
| The module Does Not Respond to the Jaguar approved diagnostic system — Rear electronic module (REM). | * Wire or connection in the SCP network.<br>* REM. | * GO to Pinpoint Test I. |
| The module Does Not Respond to the Jaguar approved diagnostic system — Active damping control module (ADCM) | * Wire or connection in the SCP network.<br>* ADCM. | * GO to Pinpoint Test J. |
| The module Does Not Respond to the Jaguar approved diagnostic system — Driver's door module (DDM) | * Wire or connection in the SCP network.<br>* DDM. | * GO to Pinpoint Test K. |
| The module Does Not Respond to the Jaguar approved diagnostic system — Dynamic stability control module (DSM). | * Wire or connection in the SCP network.<br>* DSM. | * GO to Pinpoint Test L. |
| The module Does Not Respond to the Jaguar approved diagnostic system — in car entertainment (ICE) head. | * Wire or connection in the SCP network.<br>* ICE head. | * GO to Pinpoint Test M. |
| The module Does Not Respond to the Jaguar approved diagnostic system — front electronics module (FEM). | * Wire or connection in the SCP network.<br>* FEM. | * GO to Pinpoint Test N. |
| The module Does Not Respond to the Jaguar approved diagnostic system — navigation control module (NC). | * Wire or connection in SCP network.<br>* NC. | * GO to Pinpoint Test O. |
| The module Does Not Respond to the Jaguar approved diagnostic system— restraints control module. | * Wire or connection in the ISO 9141 network.<br>* RCM. | * GO to Pinpoint Test P. |
| The module Does Not Respond to the Jaguar approved diagnostic system— Headlamp levelling module (ADHLS) | * Wire or connection in the ISO 9141 network.<br>* ADHLS. | * GO to Pinpoint Test Q. |
| The module Does Not Respond to the Jaguar approved diagnostic system— reverse park aid module. | * Wire or connection in the ISO 9141 network.<br>* reverse park aid module. | * GO to Pinpoint Test R. |
| The module Does Not Respond to the Jaguar approved diagnostic system— Intrusion sensor module. | * Wire or connection in the ISO 9141 network.<br>* Intrusion sensor module. | * GO to Pinpoint Test S. |
| The module Does Not Respond to the Jaguar approved diagnostic system— powertrain control module. | * Wire or connection in the ISO 9141 network.<br>* ECM. | * GO to Pinpoint Test T. |
| U2003. The module Does Not Respond to the Jaguar approved diagnostic system — voice activated control module (VACM). | * Wire or connection in SCP network.<br>* VACM. | * GO to Pinpoint Test U. |
| U2008. The module Does Not Respond to the Jaguar approved diagnostic system — 'phone module. | * Wire or connection in the SCP network.<br>* Wire or connection in the D2B network.<br>* 'phone module. | * GO to Pinpoint Test V. |
| P1573, P1609, P1777. Sympathetic DTCs from modules in CAN network. | * DTCs set as a result of DTCs from other modules in CAN network. | * GO to Pinpoint Test W. |
| U2003, The module Does Not Respond - compact disc changer. (CDDJ). | * Fibre optic or connection in the D2B network.<br>* CDDJ. | * GO to Pinpoint Test X. |
| U2008, The module Does Not Respond - 'phone module. | * Fibre optic or connection in the D2B network.<br>* 'phone module. | * GO to Pinpoint Test Y. |
| U2019, The module Does Not Respond - voice activated control module. (VACM). | * Fibre optic or connection in the D2B network.<br>* VACM | * GO to Pinpoint Test Z. |
| U2613, The module Does Not Respond - navigation control module. (NC). | * Fibre optic or connection in the D2B network.<br>* | * GO to Pinpoint Test AA. |
| U2614, The module Does Not Respond - Amplifier. | * Fibre optic or connection in the D2B network. | * GO to Pinpoint Test AB. |
| U2602. Break in the optical harness from the ICE head unit. (Transmitter). | * Fibre optic or connection in the D2B network. | * GO to Pinpoint Test AC. |
| U2603. Break in the optical harness to the ICE head unit. (Receiver) | * Fibre optic or connection in the D2B network. | * GO to Pinpoint Test AD. |

GETtheMANUALS.com

| | | |
|---|---|---|
| One or more D2B modules not responding. "Wake-up" signal fault. | * Faulty "wake-up" signal circuit. | * GO to Pinpoint Test AE. |
| One or more D2B modules not responding. Permanent supply fault. | * Faulty permanent supply circuit. | * GO to Pinpoint Test AF. |
| One or more D2B modules not responding. Accessory switched supply fault. | * Faulty accessory switched supply circuit. | * GO to Pinpoint Test AG. |
| One or more D2B modules not responding. Ignition switched supply fault. | * Faulty ignition switched supply circuit. | * GO to Pinpoint Test AH. |

## Pinpoint Tests

• CAUTIONS:

Be careful when probing the fuse junction panel, power distribution box or any connectors. Damage will result to the connector receptacle if the probe or terminal being used is too large.

Electronic modules are sensitive to static electrical charges. If exposed to these charges, damage may result.

• NOTE: If DTCs are recorded and the symptom is not present when performing the pinpoint tests, an intermittent concern may be the cause. Always check for loose connections and corroded terminals.

| **PINPOINT TEST A : THE MODULE DOES NOT RESPOND TO THE JAGUAR APPROVED DIAGNOSTIC TESTER — ANTI-LOCK BRAKE CONTROL MODULE** | |
|---|---|
| **TEST CONDITIONS** | **DETAILS/RESULTS/ACTIONS** |
| **A1: P1637; P1799; E521: CHECK ANTI-LOCK BRAKE CONTROL MODULE (ABS) OR DYNAMIC STABILITY CONTROL (DSC) MODULE FOR DAMAGE** | |
| | 1 Disconnect the ABS module electrical connector, FH103. |
| | 2 INSPECT the ABS module. |
| | Does the ABS module indicate any signs of damage?<br>**Yes**<br>INSTALL a new ABS module or DSC module.<br>REFER to Section 206-09 Anti-Lock Control - Stability Assist.<br>CLEAR the DTC. TEST the system for normal operation.<br>**No**<br>GO to A2. |
| **A2: CHECK CAN + FOR SHORT CIRCUIT TO GROUND** | |
| | 1 Reconnect the ABS electrical connector, FH103. |
| | 2 Turn the ignition switch to the OFF position. |
| | 3 Disconnect the battery negative terminal. |
| | 4 Measure the resistance between the diagnostic connector, FC001, pin 006, (Y) and GROUND. |
| | Is the resistance less than 5 ohms?<br>**Yes**<br>REPAIR the CAN + circuit. For additional information, refer to wiring diagrams. CLEAR the DTC. TEST the system for normal operation.<br>**No**<br>GO to A3. |
| **A3: CHECK CAN + FOR SHORT CIRCUIT TO BATTERY** | |
| | 1 Turn the ignition switch to the OFF position. |
| | 2 Disconnect the battery negative terminal. |
| | 3 Measure the resistance between the diagnostic connector, FC001, pin 006, (Y) and pin 016 (OY), BATTERY. |
| | Is the resistance less than 5 ohms?<br>**Yes**<br>REPAIR the CAN + circuit. For additional information, refer to wiring diagrams. CLEAR the DTC. TEST the system for normal operation.<br>**No**<br>GO to A4. |
| **A4: CHECK CAN - FOR SHORT CIRCUIT TO GROUND** | |
| | 1 Turn the ignition switch to the OFF position. |
| | 2 Disconnect the battery negative terminal. |
| | 3 Measure the resistance between the diagnostic connector, FC001, pin 014 (G) and GROUND. |
| | Is the resistance less than 5 ohms?<br>**Yes**<br>REPAIR the CAN - circuit. For additional information, refer to wiring diagrams. CLEAR the DTC. TEST the system for normal operation.<br>**No**<br>GO to A5. |
| **A5: CHECK CAN - FOR SHORT CIRCUIT TO BATTERY** | |
| | 1 Turn the ignition switch to the OFF position. |
| | 2 Measure the resistance between the diagnostic connector, FC001, pin 014 (G) and pin 016 (OY), BATTERY. |
| | Is the resistance less than 5 ohms?<br>**Yes**<br>REPAIR the CAN - circuit. For additional information, refer to wiring diagrams. CLEAR the DTC. TEST the system for normal operation.<br>**No**<br>GO to A6. |
| **A6: CHECK FOR SHORT CIRCUIT BETWEEN CAN + AND CAN -** | |
| | 1 Turn the ignition switch to the OFF position. |
| | 2 Disconnect the battery negative terminal. |
| | 3 Measure the resistance between the diagnostic connector, FC001 pins 006 (Y) and 014 (G). |
| | Is the resistance less than 5 ohms?<br>**Yes**<br>REPAIR the CAN - and CAN + circuits. For additional information, refer to wiring diagrams. CLEAR the DTC. TEST the system for normal operation.<br>**No** |

GETtheMANUALS.org

| | |
|---|---|
| | GO to A7. |
| **A7: CHECK FOR OPEN CIRCUIT ON CAN + BETWEEN DIAGNOSTIC CONNECTOR AND THE ABS MODULE** | |
| | 1 Turn the ignition switch to the OFF position. |
| | 2 Disconnect the battery negative terminal. |
| | 3 Disconnect the ABS module electrical connector, FH103. |
| | 4 Measure the resistance between the diagnostic connector, FC001, pin 006 (Y) and FH103, pin 012 (Y). |
| | Is the resistance less than 5 ohms?<br>**Yes**<br>GO to A9.<br>**No**<br>REPAIR the CAN + circuit. For additional information, refer to wiring diagrams. CLEAR the DTC. TEST the system for normal operation. |
| **A8: CHECK FOR OPEN CIRCUIT ON CAN - BETWEEN DIAGNOSTIC CONNECTOR AND THE ABS MODULE** | |
| | 1 Turn the ignition switch to the OFF position. |
| | 2 Disconnect the battery negative terminal. |
| | 3 Measure the resistance between the diagnostic connector, FC001, pin 014 (G) and FH103, pin 015 (G). |
| | Is the resistance less than 5 ohms?<br>**Yes**<br>GO to A9.<br>**No**<br>REPAIR the CAN - circuit. For additional information, refer to wiring diagrams. CLEAR the DTC. TEST the system for normal operation. |
| **A9: CHECK FOR CORRECT BUS TERMINATION** | |
| | 1 Turn the ignition switch to the OFF position. |
| | 2 Disconnect the battery negative terminal. |
| | 3 Reconnect the ABS module electrical connector, FC001. |
| | 4 Measure the resistance between the diagnostic connector, FC001, pins 006 (Y) and 014 (G). |
| | Is the resistance between 50 and 70 ohms?<br>**Yes**<br>INSTALL a new ABS module, or DSC module.<br>REFER to Section 206-09 Anti-Lock Control - Stability Assist.<br>CLEAR the DTC. TEST the system for normal operation.<br>**No**<br>GO to A10. |
| **A10: CHECK CONTINUITY OF THE CAN + CIRCUIT** | |
| | 1 Turn the ignition switch to the OFF position. |
| | 2 Disconnect the battery negative terminal. |
| | 3 Disconnect the ECM electrical connector, PI001, and the IC connector, FC015. |
| | 4 Measure the resistance between PI001, pin 124 (Y) and FC015, pin 018 (Y). |
| | Is the resistance less than 5 ohms?<br>**Yes**<br>GO to A11.<br>**No**<br>REPAIR the CAN + circuit between PI001, pin 124 and FC015, pin 017. For additional information, refer to wiring diagrams. CLEAR the DTC. TEST the system for normal operation. |
| **A11: CHECK CONTINUITY OF THE CAN - CIRCUIT** | |
| | 1 Turn the ignition switch to the OFF position. |
| | 2 Disconnect the battery negative terminal. |
| | 3 Measure the resistance between PI001, pin 123 (G) and FC015, pin 019 (G). |
| | Is the resistance less than 5 ohms?<br>**Yes**<br>GO to A12.<br>**No**<br>REPAIR the CAN + circuit between PI001, pin 123 and FC015, pin 019. For additional information, refer to wiring diagrams. CLEAR the DTC. TEST the system for normal operation. |
| **A12: CHECK FOR LOSS OF TERMINATION WITHIN THE ECM** | |
| | 1 Turn the ignition switch to the OFF position. |
| | 2 Disconnect the battery negative terminal. |
| | 3 Measure the resistance between pins 123 and 124 of the ECM. |
| | Is the resistance between 100 and 140 ohms?<br>**Yes**<br>GO to A13.<br>**No**<br>INSTALL a new ECM. REFER to Section 303-14A Electronic Engine Controls / 303-14B Electronic Engine Controls / 303-14C Electronic Engine Controls. CLEAR the DTC. TEST the system for normal operation. Before replacing a ECM, contact Dealer technical support. |
| **A13: CHECK FOR LOSS OF TERMINATION WITHIN THE INSTRUMENT CLUSTER** | |
| | 1 Turn the ignition switch to the OFF position. |
| | 2 Disconnect the battery negative terminal. |
| | 3 Measure the resistance between pins 018 and 019 of the instrument cluster. |
| | Is the resistance between 100 and 140 ohms?<br>**Yes**<br>Possible intermittent fault. Recheck DTCs. Repeat tests from A1.<br>**No**<br>INSTALL a new instrument cluster.<br>REFER to Section 413-01 Instrument Cluster.<br>CLEAR the DTC. TEST the system for normal operation. |

**PINPOINT TEST B : P1699, E518: THE MODULE DOES NOT RESPOND TO THE JAGUAR APPROVED DIAGNOSTIC TESTER — DUAL AUTOMATIC TEMPERATURE CONTROL (DATC) MODULE**

| TEST CONDITIONS | DETAILS/RESULTS/ACTIONS |
|---|---|
| **B1: CHECK CLIMATE CONTROL MODULE FOR DAMAGE** | |
| | 1 Disconnect the climate control module electrical connector, FC28. |
| | 2 INSPECT the climate control module for damage. |

GETtheMANUALS.org

| | |
|---|---|
| | Does the climate control module indicate any signs of damage?<br>**Yes**<br>INSTALL a new climate control module .<br>REFER to Section 412-00 Climate Control System - General Information.<br>CLEAR the DTC. TEST the system for normal operation.<br>**No**<br>GO to B2. |
| **B2: CHECK CAN + FOR SHORT CIRCUIT TO GROUND** | |
| | 1 Reconnect the climate control module electrical connector,FC28 |
| | 2 Turn the ignition switch to the OFF position. |
| | 3 Disconnect the battery negative terminal. |
| | 4 Measure the resistance between the diagnostic connector FC001 pin 006, (Y) and GROUND. |
| | Is the resistance less than 5 ohms?<br>**Yes**<br>REPAIR the CAN + circuit. CLEAR the DTC. TEST the system for normal operation.<br>**No**<br>GO to B3. |
| **B3: CHECK CAN + FOR SHORT CIRCUIT TO BATTERY** | |
| | 1 Turn the ignition switch to the OFF position. |
| | 2 Disconnect the battery negative terminal. |
| | 3 Measure the resistance between the diagnostic connector FC001 pin 006, (Y) and pin 016, BATTERY. |
| | Is the resistance less than 5 ohms?<br>**Yes**<br>REPAIR the CAN + circuit. For additional information, refer to wiring diagrams. CLEAR the DTC. TEST the system for normal operation.<br>**No**<br>GO to B4. |
| **B4: CHECK CAN - FOR SHORT CIRCUIT TO GROUND** | |
| | 1 Turn the ignition switch to the OFF position. |
| | 2 Disconnect the battery negative terminal. |
| | 3 Measure the resistance between the diagnostic connector FC001 pin 014 (G) and GROUND. |
| | Is the resistance less than 5 ohms?<br>**Yes**<br>REPAIR the CAN - circuit. For additional information, refer to wiring diagrams. CLEAR the DTC. TEST the system for normal operation.<br>**No**<br>GO to B5. |
| **B5: CHECK CAN - FOR SHORT CIRCUIT TO BATTERY** | |
| | 1 Turn the ignition switch to the OFF position. |
| | 2 Disconnect the battery negative terminal. |
| | 3 Measure the resistance between the diagnostic connector FC001 pin 014 (G) and pin 016, BATTERY. |
| | Is the resistance less than 5 ohms?<br>**Yes**<br>REPAIR the CAN - circuit. For additional information, refer to wiring diagrams. CLEAR the DTC. TEST the system for normal operation.<br>**No**<br>GO to B6. |
| **B6: CHECK FOR SHORT CIRCUIT BETWEEN CAN + AND CAN -** | |
| | 1 Turn the ignition switch to the OFF position. |
| | 2 Disconnect the battery negative terminal. |
| | 3 Measure the resistance between the diagnostic connector FC001, pins 006 (Y) and 014 (G). |
| | Is the resistance less than 5 ohms?<br>**Yes**<br>REPAIR the CAN - and CAN + circuits. For additional information, refer to wiring diagrams. CLEAR the DTC. TEST the system for normal operation.<br>**No**<br>GO to B7. |
| **B7: CHECK FOR OPEN CIRCUIT ON CAN + BETWEEN DIAGNOSTIC CONNECTOR AND THE CLIMATE CONTROL MODULE MODULE** | |
| | 1 Turn the ignition switch to the OFF position. |
| | 2 Disconnect the battery negative terminal. |
| | 3 Disconnect the climate control module module electrical connector, FC028. (FC041 on non-navigation vehicles). |
| | 4 Measure the resistance between FC001 pin 006 (Y) and FC028 pin 012 (Y). (FC041 on non-navigation vehicles). |
| | Is the resistance less than 5 ohms?<br>**Yes**<br>GO to B8.<br>**No**<br>REPAIR the CAN + circuit. For additional information, refer to wiring diagrams. CLEAR the DTC. TEST the system for normal operation. |
| **B8: CHECK FOR OPEN CIRCUIT ON CAN - BETWEEN DIAGNOSTIC CONNECTOR AND THE CLIMATE CONTROL MODULE MODULE** | |
| | 1 Turn the ignition switch to the OFF position. |
| | 2 Disconnect the battery negative terminal. |
| | 3 Measure the resistance between FC001 pin 014 (G) and FC028, pin 001 (G). |
| | Is the resistance less than 5 ohms?<br>**Yes**<br>GO to B9.<br>**No**<br>REPAIR the CAN - circuit. For additional information, refer to wiring diagrams. CLEAR the DTC. TEST the system for normal operation. |
| **B9: CHECK FOR CORRECT BUS TERMINATION** | |
| | 1 Turn the ignition switch to the OFF position. |
| | 2 Disconnect the battery negative terminal. |
| | 3 Reconnect the climate control module module electrical connector, FC028. |
| | 4 Measure the resistance between the diagnostic connector FC001, pins 006 (Y) and 014 (G). |

GETtheMANUALS.org

| | |
|---|---|
| | Is the resistance between 50 and 70 ohms?<br>**Yes**<br>INSTALL a new climate control module module.<br>REFER to Section 412-00 Climate Control System - General Information.<br>CLEAR the DTC. TEST the system for normal operation.<br>**No**<br>GO to B10. |
| **B10: CHECK CONTINUITY OF THE CAN + CIRCUIT** | |
| | 1 Turn the ignition switch to the OFF position. |
| | 2 Disconnect the battery negative terminal. |
| | 3 Disconnect the ECM electrical connector, PI001, and the IC connector, FC015. |
| | 4 Measure the resistance between PI001, pin 124 (Y) and FC015, pin 018 (Y). |
| | Is the resistance less than 5 ohms?<br>**Yes**<br>GO to B11.<br>**No**<br>REPAIR the CAN + circuit between PI001, pin 124 and FC015, pin 018. For additional information, refer to wiring diagrams. CLEAR the DTC. TEST the system for normal operation. |
| **B11: CHECK CONTINUITY OF THE CAN - CIRCUIT** | |
| | 1 Turn the ignition switch to the OFF position. |
| | 2 Disconnect the battery negative terminal. |
| | 3 Measure the resistance between PI001, pin 123 (G) and FC015, pin 019 (G). |
| | Is the resistance less than 5 ohms?<br>**Yes**<br>GO to B12.<br>**No**<br>REPAIR the CAN + circuit between PI001, pin 123 and FC015, pin 019. For additional information, refer to wiring diagrams. CLEAR the DTC. TEST the system for normal operation. |
| **B12: CHECK FOR LOSS OF TERMINATION WITHIN THE ECM** | |
| | 1 Turn the ignition switch to the OFF position. |
| | 2 Disconnect the battery negative terminal. |
| | 3 Measure the resistance between pins 123 and 124 of the ECM. |
| | Is the resistance between 100 and 140 ohms?<br>**Yes**<br>GO to B13.<br>**No**<br>INSTALL a new ECM. REFER to Section 303-14A Electronic Engine Controls / 303-14B Electronic Engine Controls / 303-14C Electronic Engine Controls. Or REFER to Section 303-14A Electronic Engine Controls / 303-14B Electronic Engine Controls / 303-14C Electronic Engine Controls. CLEAR the DTC. TEST the system for normal operation. |
| **B13: CHECK FOR LOSS OF TERMINATION WITHIN THE INSTRUMENT CLUSTER** | |
| | 1 Turn the ignition switch to the OFF position. |
| | 2 Disconnect the battery negative terminal. |
| | 3 Measure the resistance between pins 018 and 019 of the instrument cluster. |
| | Is the resistance between 100 and 140 ohms?<br>**Yes**<br>Possible intermittent fault. Recheck DTCs.<br>**No**<br>INSTALL a new instrument cluster.<br>REFER to Section 413-01 Instrument Cluster.<br>CLEAR the DTC. TEST the system for normal operation. |

## PINPOINT TEST C : P1638, P1798, E520: THE MODULE DOES NOT RESPOND TO THE JAGUAR APPROVED DIAGNOSTIC TESTER — INSTRUMENT CLUSTER

| TEST CONDITIONS | DETAILS/RESULTS/ACTIONS |
|---|---|
| **C1: CHECK INSTRUMENT CLUSTER FOR DAMAGE** | |
| | 1 Disconnect the instrument cluster electrical connector, FC015. |
| | 2 INSPECT the instrument cluster for damage. |
| | Does the instrument cluster indicate any signs of damage?<br>**Yes**<br>INSTALL a new instrument cluster.<br>REFER to Section 413-01 Instrument Cluster.<br>CLEAR the DTC. TEST the system for normal operation.<br>**No**<br>GO to C2. |
| **C2: CHECK CAN + FOR SHORT CIRCUIT TO GROUND** | |
| | 1 Reconnect the instrument cluster electrical connector, FC015. |
| | 2 Turn the ignition switch to the OFF position. |
| | 3 Disconnect the battery negative terminal. |
| | 4 Measure the resistance between the diagnostic connector FC001 pin 006, (Y) and GROUND. |
| | Is the resistance less than 5 ohms?<br>**Yes**<br>REPAIR the CAN + circuit. CLEAR the DTC. TEST the system for normal operation.<br>**No**<br>GO to C3. |
| **C3: CHECK CAN + FOR SHORT CIRCUIT TO BATTERY** | |
| | 1 Turn the ignition switch to the OFF position. |
| | 2 Disconnect the battery negative terminal. |
| | 3 Measure the resistance between the diagnostic connector FC001 pin 006, (Y) and pin 016 BATTERY. |
| | Is the resistance less than 5 ohms?<br>**Yes**<br>REPAIR the CAN + circuit. For additional information, refer to wiring diagrams. CLEAR the DTC. TEST the system for normal operation.<br>**No**<br>GO to C4. |
| **C4: CHECK CAN - FOR SHORT CIRCUIT TO GROUND** | |

GETtheMANUALS.org

| | |
|---|---|
| | 1 Turn the ignition switch to the OFF position. |
| | 2 Disconnect the battery negative terminal. |
| | 3 Measure the resistance between the diagnostic connector FC001 pin 014 (G) and GROUND. |
| | Is the resistance less than 5 ohms?<br>**Yes**<br>REPAIR the CAN - circuit. For additional information, refer to wiring diagrams. CLEAR the DTC. TEST the system for normal operation.<br>**No**<br>GO to C5. |
| **C5: CHECK CAN - FOR SHORT CIRCUIT TO BATTERY** | |
| | 1 Turn the ignition switch to the OFF position. |
| | 2 Measure the resistance between the diagnostic connector FC001 pin 014 (G) and pin 016 BATTERY. |
| | Is the resistance less than 5 ohms?<br>**Yes**<br>REPAIR the CAN - circuit. For additional information, refer to wiring diagrams. CLEAR the DTC. TEST the system for normal operation.<br>**No**<br>GO to C6. |
| **C6: CHECK FOR SHORT CIRCUIT BETWEEN CAN + AND CAN -** | |
| | 1 Turn the ignition switch to the OFF position. |
| | 2 Disconnect the battery negative terminal. |
| | 3 Measure the resistance between the diagnostic connector FC001 pins 006 (Y) and 014 (G). |
| | Is the resistance less than 5 ohms?<br>**Yes**<br>REPAIR the CAN - and CAN + circuits. For additional information, refer to wiring diagrams. CLEAR the DTC. TEST the system for normal operation.<br>**No**<br>GO to C7. |
| **C7: CHECK FOR OPEN CIRCUIT ON CAN + BETWEEN DIAGNOSTIC CONNECTOR AND THE INSTRUMENT CLUSTER** | |
| | 1 Turn the ignition switch to the OFF position. |
| | 2 Disconnect the battery negative terminal. |
| | 3 Disconnect the instrument cluster electrical connector, FC015 |
| | 4 Measure the resistance between FC001 pin 006 (Y) and FC015, pin 008 (Y). |
| | Is the resistance less than 5 ohms?<br>**Yes**<br>GO to C8.<br>**No**<br>REPAIR the CAN + circuit. For additional information, refer to wiring diagrams. CLEAR the DTC. TEST the system for normal operation. |
| **C8: CHECK FOR OPEN CIRCUIT ON CAN - BETWEEN DIAGNOSTIC CONNECTOR AND THE INSTRUMENT CLUSTER** | |
| | 1 Turn the ignition switch to the OFF position. |
| | 2 Disconnect the battery negative terminal. |
| | 3 Measure the resistance between FC001 pin 014 (G) and FC015, pin 009 (G). |
| | Is the resistance less than 5 ohms?<br>**Yes**<br>GO to C9.<br>**No**<br>REPAIR the CAN - circuit. For additional information, refer to wiring diagrams. CLEAR the DTC. TEST the system for normal operation. |
| **C9: CHECK FOR CORRECT BUS TERMINATION** | |
| | 1 Turn the ignition switch to the OFF position. |
| | 2 Disconnect the battery negative terminal. |
| | 3 Reconnect the instrument cluster electrical connector, FC015. |
| | 4 Measure the resistance between the diagnostic connector FC001, pins 006 (Y) and 014 (G). |
| | Is the resistance between 50 and 70 ohms?<br>**Yes**<br>INSTALL a new instrument cluster.<br>REFER to Section 413-01 Instrument Cluster.<br>CLEAR the DTC. TEST the system for normal operation.<br>**No**<br>GO to C10. |
| **C10: CHECK CONTINUITY OF THE CAN + CIRCUIT** | |
| | 1 Turn the ignition switch to the OFF position. |
| | 2 Disconnect the battery negative terminal. |
| | 3 Disconnect the ECM electrical connector, PI001, and the IP connector, FC015. |
| | 4 Measure the resistance between PI001, pin 124 (Y) and FC015, pin 018 (Y). |
| | Is the resistance less than 5 ohms?<br>**Yes**<br>GO to C11.<br>**No**<br>REPAIR the CAN + circuit between PI001, pin 124 and FC015, pin 018. For additional information, refer to wiring diagrams. CLEAR the DTC. TEST the system for normal operation. |
| **C11: CHECK CONTINUITY OF THE CAN - CIRCUIT** | |
| | 1 Turn the ignition switch to the OFF position. |
| | 2 Disconnect the battery negative terminal. |
| | 3 Measure the resistance between PI001, pin 123 (G) and FC015, pin 019 (G). |
| | Is the resistance less than 5 ohms?<br>**Yes**<br>GO to C12.<br>**No**<br>REPAIR the CAN + circuit between PI001, pin 123 and FC015, pin 019. For additional information, refer to wiring diagrams. CLEAR the DTC. TEST the system for normal operation. |
| **C12: CHECK FOR LOSS OF TERMINATION WITHIN THE ECM** | |
| | 1 Turn the ignition switch to the OFF position. |
| | 2 Disconnect the battery negative terminal. |

GETfreeMANUALS.org

| | |
|---|---|
| | 3 Measure the resistance between pins 123 and 124 of the ECM. |
| | Is the resistance between 100 and 140 ohms?<br>**Yes**<br>GO to C13.<br>**No**<br>INSTALL a new ECM. REFER to Section 303-14A Electronic Engine Controls / 303-14B Electronic Engine Controls / 303-14C Electronic Engine Controls. Or REFER to Section 303-14A Electronic Engine Controls / 303-14B Electronic Engine Controls / 303-14C Electronic Engine Controls. CLEAR the DTC. TEST the system for normal operation. |
| **C13: CHECK FOR LOSS OF TERMINATION WITHIN THE INSTRUMENT CLUSTER** | |
| | 1 Turn the ignition switch to the OFF position. |
| | 2 Disconnect the battery negative terminal. |
| | 3 Measure the resistance between pins 018 and 019 of the instument cluster. |
| | Is the resistance between 100 and 140 ohms?<br>**Yes**<br>Possible intermittent fault. Recheck DTCs.<br>**No**<br>INSTALL a new instrument cluster.<br>REFER to Section 413-01 Instrument Cluster.<br>CLEAR the DTC. TEST the system for normal operation. |

## PINPOINT TEST D : P1642; P1797; E523: THE MODULE DOES NOT RESPOND TO THE JAGUAR APPROVED DIAGNOSTIC TESTER — ECM

| TEST CONDITIONS | DETAILS/RESULTS/ACTIONS |
|---|---|
| **D1: CHECK ECM FOR DAMAGE** | |
| | 1 Disconnect the ECM. |
| | 2 INSPECT the ECM. |
| | Does the ECM indicate any signs of damage?<br>**Yes**<br>INSTALL a new ECM. REFER to Section 303-14A Electronic Engine Controls / 303-14B Electronic Engine Controls / 303-14C Electronic Engine Controls. CLEAR the DTC. TEST the system for normal operation.<br>**No**<br>GO to D2. |
| **D2: CHECK CAN + FOR SHORT CIRCUIT TO GROUND** | |
| | 1 Reconnect the ECM electrical connector PI001. |
| | 2 Turn the ignition switch to the OFF position. |
| | 3 Disconnect the battery negative terminal. |
| | 4 Measure the resistance between the diagnostic connector FC001 pin 006, (Y) and GROUND. |
| | Is the resistance less than 5 ohms?<br>**Yes**<br>REPAIR the CAN + circuit. For additional information, refer to wiring diagrams. CLEAR the DTC. TEST the system for normal operation.<br>**No**<br>GO to D3. |
| **D3: CHECK CAN + FOR SHORT CIRCUIT TO BATTERY** | |
| | 1 Turn the ignition switch to the OFF position. |
| | 2 Disconnect the battery negative terminal. |
| | 3 Measure the resistance between the diagnostic connector FC001 pin 006, (Y) and pin 016, BATTERY. |
| | Is the resistance less than 5 ohms?<br>**Yes**<br>REPAIR the CAN + circuit. For additional information, refer to wiring diagrams. CLEAR the DTC. TEST the system for normal operation.<br>**No**<br>GO to D4. |
| **D4: CHECK CAN - FOR SHORT CIRCUIT TO GROUND** | |
| | 1 Turn the ignition switch to the OFF position. |
| | 2 Disconnect the battery negative terminal. |
| | 3 Measure the resistance between the diagnostic connector FC001 pin 014 (G) and GROUND. |
| | Is the resistance less than 5 ohms?<br>**Yes**<br>REPAIR the CAN - circuit. For additional information, refer to wiring diagrams. CLEAR the DTC. TEST the system for normal operation.<br>**No**<br>GO to D5. |
| **D5: CHECK CAN - FOR SHORT CIRCUIT TO BATTERY** | |
| | 1 Turn the ignition switch to the OFF position. |
| | 2 Measure the resistance between the diagnostic connector FC001 pin 014 (G) and pin 016, BATTERY. |
| | Is the resistance less than 5 ohms?<br>**Yes**<br>REPAIR the CAN - circuit. For additional information, refer to wiring diagrams. CLEAR the DTC. TEST the system for normal operation.<br>**No**<br>GO to D6. |
| **D6: CHECK FOR SHORT CIRCUIT BETWEEN CAN + AND CAN -** | |
| | 1 Turn the ignition switch to the OFF position. |
| | 2 Disconnect the battery negative terminal. |
| | 3 Measure the resistance between the diagnostic connector FC001 pins 006 (Y) and 014 (G). |
| | Is the resistance less than 5 ohms?<br>**Yes**<br>REPAIR the CAN - and CAN + circuits. For additional information, refer to wiring diagrams. CLEAR the DTC. TEST the system for normal operation.<br>**No**<br>GO to D7. |
| **D7: CHECK FOR OPEN CIRCUIT ON CAN + BETWEEN DIAGNOSTIC CONNECTOR AND THE ECM** | |
| | 1 Turn the ignition switch to the OFF position. |

GETthemANUALS.org

| | |
|---|---|
| | 2 Disconnect the battery negative terminal. |
| | 3 Disconnect the ECM electrical connector, PI001. |
| | 4 Measure the resistance between FC001 pin 006 (Y) and PI001, pin 124 (Y). |
| | Is the resistance less than 5 ohms?<br>**Yes**<br>GO to D8.<br>**No**<br>REPAIR the CAN + circuit. For additional information, refer to wiring diagrams. CLEAR the DTC. TEST the system for normal operation. |
| **D8: CHECK FOR OPEN CIRCUIT ON CAN - BETWEEN DIAGNOSTIC CONNECTOR AND THE ECM** | |
| | 1 Turn the ignition switch to the OFF position. |
| | 2 Disconnect the battery negative terminal. |
| | 3 Measure the resistance between FC001 pin 014 (G) and PI001, pin 123 (G). |
| | Is the resistance less than 5 ohms?<br>**Yes**<br>GO to D9.<br>**No**<br>REPAIR the CAN - circuit. For additional information, refer to wiring diagrams. CLEAR the DTC. TEST the system for normal operation. |
| **D9: CHECK FOR CORRECT BUS TERMINATION** | |
| | 1 Turn the ignition switch to the OFF position. |
| | 2 Disconnect the battery negative terminal. |
| | 3 Reconnect the ECM electrical connector, PI001. |
| | 4 Measure the resistance between the diagnostic connector FC001, pins 006 (Y) and 014 (G). |
| | Is the resistance between 50 and 70 ohms?<br>**Yes**<br>INSTALL a new ECM. REFER to Section 303-14A Electronic Engine Controls / 303-14B Electronic Engine Controls / 303-14C Electronic Engine Controls. Or REFER to Section 303-14A Electronic Engine Controls / 303-14B Electronic Engine Controls / 303-14C Electronic Engine Controls. CLEAR the DTC. TEST the system for normal operation. Before replacing a ECM, contact Dealer technical support.<br>**No**<br>GO to D10. |
| **D10: CHECK CONTINUITY OF THE CAN + CIRCUIT** | |
| | 1 Turn the ignition switch to the OFF position. |
| | 2 Disconnect the battery negative terminal. |
| | 3 Disconnect the ECM electrical connector, PI001, and the IP connector, FC015. |
| | 4 Measure the resistance between PI001, pin 124 (Y) and FC015, pin 018 (Y). |
| | Is the resistance less than 5 ohms?<br>**Yes**<br>GO to D11.<br>**No**<br>REPAIR the CAN + circuit between PI001, pin 124 and FC015, pin 018. For additional information, refer to wiring diagrams. CLEAR the DTC. TEST the system for normal operation. |
| **D11: CHECK CONTINUITY OF THE CAN - CIRCUIT** | |
| | 1 Turn the ignition switch to the OFF position. |
| | 2 Disconnect the battery negative terminal. |
| | 3 Measure the resistance between PI001, pin 123 (G) and FC015, pin 019 (G). |
| | Is the resistance less than 5 ohms?<br>**Yes**<br>GO to D12.<br>**No**<br>REPAIR the CAN + circuit between PI001, pin 123 and FC015, pin 019. For additional information, refer to wiring diagrams. CLEAR the DTC. TEST the system for normal operation. |
| **D12: CHECK FOR LOSS OF TERMINATION WITHIN THE ECM** | |
| | 1 Turn the ignition switch to the OFF position. |
| | 2 Disconnect the battery negative terminal. |
| | 3 Measure the resistance between pins 123 and 124 of the ECM. |
| | Is the resistance between 100 and 140 ohms?<br>**Yes**<br>GO to D13.<br>**No**<br>INSTALL a new ECM. REFER to Section 303-14A Electronic Engine Controls / 303-14B Electronic Engine Controls / 303-14C Electronic Engine Controls. Or REFER to Section 303-14A Electronic Engine Controls / 303-14B Electronic Engine Controls / 303-14C Electronic Engine Controls. CLEAR the DTC. TEST the system for normal operation. Before replacing a ECM, contact Dealer technical support. |
| **D13: CHECK FOR LOSS OF TERMINATION WITHIN THE INSTRUMENT CLUSTER** | |
| | 1 Turn the ignition switch to the OFF position. |
| | 2 Disconnect the battery negative terminal. |
| | 3 Measure the resistance between pins 018 and 019 of the instument cluster. |
| | Is the resistance between 100 and 140 ohms?<br>**Yes**<br>Possible intermittent fault. Recheck DTCs.<br>**No**<br>INSTALL a new instrument cluster.<br>REFER to Section 413-01 Instrument Cluster.<br>CLEAR the DTC. TEST the system for normal operation. |

**PINPOINT TEST E : P1637: THE MODULE DOES NOT RESPOND TO THE JAGUAR APPROVED DIAGNOSTIC TESTER — TRANSMISSION CONTROL MODULE (TCM)**

| TEST CONDITIONS | DETAILS/RESULTS/ACTIONS |
|---|---|
| **E1: CHECK TCM FOR DAMAGE** | |
| | 1 Disconnect the TCM. |
| | 2 INSPECT the TCM and main control valve body |

GETtheMANUALS.org

| | |
|---|---|
| | Does the TCM indicate any signs of damage?<br>**Yes**<br>INSTALL a new TCM and main control valve body.<br>REFER to Section 307-01 Automatic Transmission/Transaxle.<br>CLEAR the DTC. TEST the system for normal operation.<br>**No**<br>GO to E2. |
| **E2: CHECK CAN + FOR SHORT CIRCUIT TO GROUND** | |
| | 1 Reconnect the TCM electrical connector GB02. |
| | 2 Turn the ignition switch to the OFF position. |
| | 3 Disconnect the battery negative terminal. |
| | 4 Measure the resistance between the diagnostic connector FC001 pin 006, (Y) and GROUND. |
| | Is the resistance less than 5 ohms?<br>**Yes**<br>REPAIR the CAN + circuit. For additional information, refer to wiring diagrams. CLEAR the DTC. TEST the system for normal operation.<br>**No**<br>GO to E3. |
| **E3: CHECK CAN + FOR SHORT CIRCUIT TO BATTERY** | |
| | 1 Turn the ignition switch to the OFF position. |
| | 2 Disconnect the battery negative terminal. |
| | 3 Measure the voltage between the diagnostic connector FC001, pin 006, (Y) and pin 016, BATTERY. |
| | Is the resistance less than 5 ohms?<br>**Yes**<br>REPAIR the CAN + circuit. For additional information, refer to wiring diagrams. CLEAR the DTC. TEST the system for normal operation.<br>**No**<br>GO to E4. |
| **E4: CHECK CAN - FOR SHORT CIRCUIT TO GROUND** | |
| | 1 Turn the ignition switch to the OFF position. |
| | 2 Disconnect the battery negative terminal. |
| | 3 Measure the resistance between the diagnostic connector FC001, pin 014 (G) and GROUND. |
| | Is the resistance less than 5 ohms?<br>**Yes**<br>REPAIR the CAN - circuit. For additional information, refer to wiring diagrams. CLEAR the DTC. TEST the system for normal operation.<br>**No**<br>GO to E5. |
| **E5: CHECK CAN - FOR SHORT CIRCUIT TO BATTERY** | |
| | 1 Turn the ignition switch to the OFF position. |
| | 2 Disconnect the battery negative terminal. |
| | 3 Measure the resistance between the diagnostic connector FC001, pin 014 (G) and pin 016, BATTERY. |
| | Is the resistance less than 5 ohms?<br>**Yes**<br>REPAIR the CAN - circuit. For additional information, refer to wiring diagrams. CLEAR the DTC. TEST the system for normal operation.<br>**No**<br>GO to E6. |
| **E6: CHECK FOR SHORT CIRCUIT BETWEEN CAN + AND CAN -** | |
| | 1 Turn the ignition switch to the OFF position. |
| | 2 Disconnect the battery negative terminal. |
| | 3 Measure the resistance between the diagnostic connector FC001, pins 006 (Y) and 014 (G). |
| | Is the resistance less than 5 ohms?<br>**Yes**<br>REPAIR the CAN - and CAN + circuits. For additional information, refer to wiring diagrams. CLEAR the DTC. TEST the system for normal operation.<br>**No**<br>GO to E7. |
| **E7: CHECK FOR OPEN CIRCUIT ON CAN + BETWEEN DIAGNOSTIC CONNECTOR AND THE TCM** | |
| | 1 Turn the ignition switch to the OFF position. |
| | 2 Disconnect the battery negative terminal. |
| | 3 Disconnect the TCM electrical connector, GB02. |
| | 4 Measure the resistance between FC001, pin 006 (Y) and GB02, pin 006 (Y). |
| | Is the resistance less than 5 ohms?<br>**Yes**<br>GO to E8.<br>**No**<br>REPAIR the CAN + circuit. For additional information, refer to wiring diagrams. CLEAR the DTC. TEST the system for normal operation. |
| **E8: CHECK FOR OPEN CIRCUIT ON CAN - BETWEEN DIAGNOSTIC CONNECTOR AND THE TCM** | |
| | 1 Turn the ignition switch to the OFF position. |
| | 2 Disconnect the battery negative terminal. |
| | 3 Measure the resistance between FC001, pin 014 (G) and GB02, pin 2 (G). |
| | Is the resistance less than 5 ohms?<br>**Yes**<br>GO to E9.<br>**No**<br>REPAIR the CAN - circuit. For additional information, refer to wiring diagrams. CLEAR the DTC. TEST the system for normal operation. |
| **E9: CHECK FOR CORRECT BUS TERMINATION** | |
| | 1 Turn the ignition switch to the OFF position. |
| | 2 Disconnect the battery negative terminal. |
| | 3 Reconnect the TCM electrical connector, GB02. |
| | 4 Measure the resistance between the diagnostic connector FC001, pins 006 (Y) and 014 (G). |

GETtheMANUALS.org

| | |
|---|---|
| | Is the resistance between 50 and 70 ohms?<br>**Yes**<br>INSTALL a new TCM.<br>REFER to Section 307-01 Automatic Transmission/Transaxle.<br>CLEAR the DTC. TEST the system for normal operation.<br>**No**<br>GO to E10. |
| **E10: CHECK CONTINUITY OF THE CAN + CIRCUIT** | |
| | 1 Turn the ignition switch to the OFF position. |
| | 2 Disconnect the battery negative terminal. |
| | 3 Disconnect the ECM electrical connector, PI001, and the IP connector, FC015. |
| | 4 Measure the resistance between PI001 pin 124 (Y) and FC015, pin 018 (Y). |
| | Is the resistance less than 5 ohms?<br>**Yes**<br>GO to E11.<br>**No**<br>REPAIR the CAN + circuit between PI001, pin 124 and FC015, pin 018. For additional information, refer to wiring diagrams. CLEAR the DTC. TEST the system for normal operation. |
| **E11: CHECK CONTINUITY OF THE CAN - CIRCUIT** | |
| | 1 Turn the ignition switch to the OFF position. |
| | 2 Disconnect the battery negative terminal. |
| | 3 Measure the resistance between PI001, pin 123 (G) and FC015, pin 019 (G). |
| | Is the resistance less than 5 ohms?<br>**Yes**<br>GO to E12.<br>**No**<br>REPAIR the CAN - circuit between PI001, pin 123 and FC015, pin 019. For additional information, refer to wiring diagrams. CLEAR the DTC. TEST the system for normal operation. |
| **E12: CHECK FOR LOSS OF TERMINATION WITHIN THE ECM** | |
| | 1 Turn the ignition switch to the OFF position. |
| | 2 Disconnect the battery negative terminal. |
| | 3 Measure the resistance between pins 123 and 124 of the ECM. |
| | Is the resistance between 110 and 140 ohms?<br>**Yes**<br>GO to E13.<br>**No**<br>INSTALL a new ECM. REFER to Section 303-14A Electronic Engine Controls / 303-14B Electronic Engine Controls / 303-14C Electronic Engine Controls. Or REFER to Section 303-14A Electronic Engine Controls / 303-14B Electronic Engine Controls / 303-14C Electronic Engine Controls. CLEAR the DTC. TEST the system for normal operation. |
| **E13: CHECK FOR LOSS OF TERMINATION WITHIN THE INSTRUMENT CLUSTER** | |
| | 1 Turn the ignition switch to the OFF position. |
| | 2 Disconnect the battery negative terminal. |
| | 3 Measure the resistance between pins 018 and 019 of the instument cluster. |
| | Is the resistance between 110 and 140 ohms?<br>**Yes**<br>Possible intermittent fault. Recheck DTCs.<br>**No**<br>INSTALL a new instrument cluster.<br>REFER to Section 413-01 Instrument Cluster.<br>CLEAR the DTC. TEST the system for normal operation. |

## PINPOINT TEST F : P1603. TCM EEPROM FAILURE

| TEST CONDITIONS | DETAILS/RESULTS/ACTIONS |
|---|---|
| **F1: DTC SET BY 3 POSSIBLE FACTORS.** | |
| | 1 Check battery voltage. |
| | Has the battery been discharged to a voltage where the engine would not crank?<br>**Yes**<br>Charge and test battery. INSTALL a new battery, if required.<br>REFER to Section 414-01 Battery, Mounting and Cables.<br>CARRY out a drive-cycle.<br>(The transmission may lose it's adaptive values and will need to re-learn these values. These values will depend on the owner's driving style, and can only be learnt by normal use.)<br>**No**<br>GO to F2. |
| **F2: DTC SET BY 3 POSSIBLE FACTORS** | |
| | 1 Check the TCM for signs of water ingress. |
| | Does the TCM show any indication of water ingress?<br>**Yes**<br>INSTALL a new TCM and main control valve body.<br>REFER to Section 307-01 Automatic Transmission/Transaxle.<br>CLEAR the DTC. TEST the system for normal operation.<br>**No**<br>GO to F3. |
| **F3: DTC SET BY 3 POSSIBLE FACTORS** | |
| | 1 Check if the battery has been disconnected with the ignition switched on. |
| | Has the battery been disconnected with the ignition switched on?<br>**Yes**<br>Carry out a drive-cycle. For additional information, refer to the DTC section of JTIS.<br>(The transmission may lose it's adaptive values and will need to re-learn these values. These values will depend on the owner's driving style, and can only be learnt by normal use)<br>.<br>**No**<br>INSTALL a new TCM and main control valve body.<br>REFER to Section 307-01 Automatic Transmission/Transaxle.<br>CLEAR the DTC. TEST the system for normal operation. |

GETtheMANUALS.org

## PINPOINT TEST G : THE MODULE DOES NOT RESPOND TO THE JAGUAR APPROVED DIAGNOSTIC TESTER — ELECTRONIC PARK BRAKE (EPB) MODULE

| TEST CONDITIONS | DETAILS/RESULTS/ACTIONS |
|---|---|
| **G1: CHECK EPB MODULE FOR DAMAGE** | |
| | 1 Disconnect the EPB module electrical connector CA242. |
| | 2 INSPECT the EPB module for damage. |
| | Does the EPB module indicate any signs of damage?<br>**Yes**<br>INSTALL a new EPB module.<br>REFER to Section 206-05 Parking Brake and Actuation.<br>CLEAR the DTC. TEST the system for normal operation.<br>**No**<br>GO to G2. |
| **G2: CHECK THE SCP + FOR SHORT CIRCUIT TO GROUND** | |
| | 1 Turn the ignition switch to the OFF position. |
| | 2 Disconnect the battery negative terminal. |
| | 3 Measure the resistance between the diagnostic connector FC001 pin 2, (Y) and GROUND. |
| | Is the resistance less than 5 ohms?<br>**Yes**<br>REPAIR the SCP + circuit. For additional information, refer to wiring diagrams. CLEAR the DTC. TEST the system for normal operation.<br>**No**<br>GO to G3. |
| **G3: CHECK THE SCP + FOR SHORT CIRCUIT TO BATTERY** | |
| | 1 Turn the ignition switch to the OFF position. |
| | 2 Disconnect the battery negative terminal. |
| | 3 Measure the resistance between the diagnostic connector FC001 pin 2, (Y) and pin 016 , BATTERY. |
| | Is the resistance less than 5 ohms?<br>**Yes**<br>REPAIR the SCP + circuit. For additional information, refer to wiring diagrams. CLEAR the DTC. TEST the system for normal operation.<br>**No**<br>GO to G4. |
| **G4: CHECK THE SCP - FOR SHORT CIRCUIT TO GROUND** | |
| | 1 Turn the ignition switch to the OFF position. |
| | 2 Disconnect the battery negative terminal. |
| | 3 Measure the resistance between the diagnostic connector FC001 pin 10, (U) and GROUND. |
| | Is the resistance less than 5 ohms?<br>**Yes**<br>REPAIR the SCP - circuit. For additional information, refer to wiring diagrams. CLEAR the DTC. TEST the system for normal operation.<br>**No**<br>GO to G5. |
| **G5: CHECK THE SCP - FOR SHORT CIRCUIT TO BATTERY** | |
| | 1 Turn the ignition switch to the OFF position. |
| | 2 Disconnect the battery negative terminal. |
| | 3 Measure the resistance between the diagnostic connector FC001 pin 10, (U) and pin 016, BATTERY (OY). |
| | Is the resistance less than 5 ohms?<br>**Yes**<br>REPAIR the SCP - circuit. For additional information, refer to wiring diagrams. CLEAR the DTC. TEST the system for normal operation.<br>**No**<br>GO to G6. |
| **G6: CHECK FOR SHORT CIRCUIT BETWEEN SCP + AND SCP -** | |
| | 1 Turn the ignition switch to the OFF position. |
| | 2 Disconnect the battery negative terminal. |
| | 3 Measure the resistance between the diagnostic connector FC001 pin 10, (U) and pin 2, (Y). |
| | Is the resistance less than 5 ohms?<br>**Yes**<br>REPAIR the SCP + and/or SCP - circuit. For additional information, refer to wiring diagrams. CLEAR the DTC. TEST the system for normal operation.<br>**No**<br>GO to G7. |
| **G7: CHECK FOR OPEN CIRCUIT ON SCP + BETWEEN THE DIAGNOSTIC CONNECTOR AND THE EPB MODULE** | |
| | 1 Turn the ignition switch to the OFF position. |
| | 2 Disconnect the battery negative terminal. |
| | 3 Disconnect the EPB module electrical connector, CA242. |
| | 4 Measure the resistance between the diagnostic connector FC001, pin 002 (Y) and CA242, pin 001 (Y). |
| | Is the resistance less than 5 ohms?<br>**Yes**<br>GO to G8.<br>**No**<br>REPAIR the SCP + circuit. For additional information, refer to wiring diagrams. CLEAR the DTC. TEST the system for normal operation. |
| **G8: CHECK FOR OPEN CIRCUIT ON SCP - BETWEEN THE DIAGNOSTIC CONNECTOR AND THE EPB MODULE** | |
| | 1 Turn the ignition switch to the OFF position. |
| | 2 Disconnect the battery negative terminal. |
| | 3 Disconnect the EPB module electrical connector, CA242. |
| | 4 Measure the resistance between the diagnostic connector FC001, pin 010 (U) and CA242, pin 007 (U). |
| | Is the resistance less than 5 ohms?<br>**Yes**<br>GO to G9.<br>**No**<br>REPAIR the SCP - circuit. For additional information, refer to wiring diagrams. CLEAR the DTC. TEST the system for |

GETtheMANUALS.org

| | |
|---|---|
| | normal operation. |
| **G9: CHECK FOR CORRECT BUS TERMINATION ON SCP +** | |
| | 1 Turn the ignition switch to the OFF position. |
| | 2 Disconnect the battery negative terminal. |
| | 3 Reconnect the EPB module electrical connector, CA242. |
| | 4 Measure the resistance between the diagnostic connector FC001, pin 2 (Y) and GROUND. |
| | Is the resistance 90 to 150 ohms?<br>**Yes**<br>INSTALL a new EPB module.<br>REFER to Section 206-05 Parking Brake and Actuation.<br>CLEAR the DTC. TEST the system for normal operation.<br>**No**<br>GO to G10. |
| **G10: CHECK THE CONTINUITY OF THE FRONT ELECTRONIC MODULE (FEM) SCP + CIRCUIT** | |
| | 1 Turn the ignition switch to the OFF position. |
| | 2 Disconnect the battery negative terminal. |
| | 3 Disconnect the FEM electrical connector, FH059. |
| | 4 Measure the resistance between FC001, pin 2 (Y) and FH059, pin 7 (Y). |
| | Is the resistance less than 5 ohms?<br>**Yes**<br>GO to H11.<br>**No**<br>REPAIR the circuit. For additional information, refer to wiring diagrams. CLEAR the DTC. TEST the system for normal operation. |
| **G11: CHECK FOR LOSS OF SCP + TERMINATION WITHIN THE FEM** | |
| | 1 Turn the ignition switch to the OFF position. |
| | 2 Disconnect the battery negative terminal. |
| | 3 Disconnect the FEM electrical connectors, FH059, and FH060. |
| | 4 Measure the resistance between FH059, pin 007 (Y), and FH060, pin 011 (Y) of the FEM. (Reconnect the FEM following completion of the test). |
| | Is the resistance 140 to 220 ohms?<br>**No**<br>GO to H12.<br>**Yes**<br>INSTALL a new FEM.<br>REFER to Section 419-10 Multifunction Electronic Modules. |
| **G12: CHECK THE CONTINUITY OF THE REAR ELECTRONIC MODULE (REM) SCP + CIRCUIT** | |
| | 1 Turn the ignition switch to the OFF position. |
| | 2 Disconnect the battery negative terminal. |
| | 3 Disconnect the REM electrical connector, CA102. |
| | 4 Measure the resistance between FC001, pin 2 (Y) and CA102, pin 001 (Y). |
| | Is the resistance less than 5 ohms?<br>**Yes**<br>GO to H13.<br>**No**<br>REPAIR the circuit. For additional information, refer to wiring diagrams. CLEAR the DTC. TEST the system for normal operation. |
| **G13: CHECK FOR LOSS OF SCP + TERMINATION WITHIN THE REM** | |
| | 1 Turn the ignition switch to the OFF position. |
| | 2 Disconnect the battery negative terminal. |
| | 3 Disconnect the REM electrical connector, CA102. |
| | 4 Measure the resistance between CA102, pin 001 (Y), and CA102, pin 012 (B) of the REM. (Reconnect the REM following completion of the test). |
| | Is the resistance 140 to 220 ohms?<br>**No**<br>GO to H14.<br>**Yes**<br>INSTALL a new REM.<br>REFER to Section 419-10 Multifunction Electronic Modules. |
| **G14: CHECK CONTINUITY OF THE INSTRUMENT CLUSTER (IC) SCP + CIRCUIT** | |
| | 1 Turn the ignition switch to the OFF position. |
| | 2 Disconnect the battery negative terminal. |
| | 3 Disconnect the IC electrical connector, FC015. |
| | 4 Measure the resistance between FC001, pin 002 (Y) and FC015, pin 020 (Y). |
| | Is the resistance less than 5 ohms?<br>**Yes**<br>GO to H15.<br>**No**<br>REPAIR the circuit. For additional information, refer to wiring diagrams. CLEAR the DTC. TEST the system for normal operation. |
| **G15: CHECK FOR LOSS OF SCP + TERMINATION WITHIN THE INSTRUMENT CLUSTER** | |
| | 1 Turn the ignition switch to the OFF position. |
| | 2 Disconnect the battery negative terminal. |
| | 3 Disconnect the IC electrical connector, FC015. |
| | 4 Measure the resistance between FC015, pin 020 (Y) and FC014, pin 014 of the IC. |
| | Is the resistance 140 to 220 ohms?<br>**Yes**<br>Possible intermittent fault. Recheck DTCs.<br>**No**<br>INSTALL a new IC.<br>REFER to Section 413-01 Instrument Cluster.<br>CLEAR the DTC. TEST the system for normal operation. |

GETtheMANUALS.org

**PINPOINT TEST H : THE MODULE DOES NOT RESPOND TO THE JAGUAR APPROVED DIAGNOSTIC TESTER — INSTRUMENT CLUSTER (IC)**

| TEST CONDITIONS | DETAILS/RESULTS/ACTIONS |
|---|---|
| **H1: CHECK IC FOR DAMAGE** | |
| | 1 Disconnect the IC electrical connector FC015. |
| | 2 INSPECT the IC for damage. |
| | Does the IC indicate any signs of damage?<br>**Yes**<br>INSTALL a new IC.<br>REFER to Section 501-12 Instrument Panel and Console.<br>CLEAR the DTC. TEST the system for normal operation.<br>**No**<br>GO to H2. |
| **H2: CHECK THE SCP + FOR SHORT CIRCUIT TO GROUND** | |
| | 1 Turn the ignition switch to the OFF position. |
| | 2 Disconnect the battery negative terminal. |
| | 3 Measure the resistance between the diagnostic connector FC001 pin 2, (Y) and GROUND. |
| | Is the resistance less than 5 ohms?<br>**Yes**<br>REPAIR the SCP + circuit. For additional information, refer to wiring diagrams. CLEAR the DTC. TEST the system for normal operation.<br>**No**<br>GO to H3. |
| **H3: CHECK THE SCP + FOR SHORT CIRCUIT TO BATTERY** | |
| | 1 Turn the ignition switch to the OFF position. |
| | 2 Disconnect the battery negative terminal. |
| | 3 Measure the resistance between the diagnostic connector FC001 pin 2, (Y) and pin 016 , BATTERY. |
| | Is the resistance less than 5 ohms?<br>**Yes**<br>REPAIR the SCP + circuit. For additional information, refer to wiring diagrams. CLEAR the DTC. TEST the system for normal operation.<br>**No**<br>GO to H4. |
| **H4: CHECK THE SCP - FOR SHORT CIRCUIT TO GROUND** | |
| | 1 Turn the ignition switch to the OFF position. |
| | 2 Disconnect the battery negative terminal. |
| | 3 Measure the resistance between the diagnostic connector FC001 pin 10, (U) and GROUND. |
| | Is the resistance less than 5 ohms?<br>**Yes**<br>REPAIR the SCP - circuit. For additional information, refer to wiring diagrams. CLEAR the DTC. TEST the system for normal operation.<br>**No**<br>GO to H5. |
| **H5: CHECK THE SCP - FOR SHORT CIRCUIT TO BATTERY** | |
| | 1 Turn the ignition switch to the OFF position. |
| | 2 Disconnect the battery negative terminal. |
| | 3 Measure the resistance between the diagnostic connector FC001 pin 10, (U) and pin 016, BATTERY (OY). |
| | Is the resistance less than 5 ohms?<br>**Yes**<br>REPAIR the SCP - circuit. For additional information, refer to wiring diagrams. CLEAR the DTC. TEST the system for normal operation.<br>**No**<br>GO to H6. |
| **H6: CHECK FOR SHORT CIRCUIT BETWEEN SCP + AND SCP -** | |
| | 1 Turn the ignition switch to the OFF position. |
| | 2 Disconnect the battery negative terminal. |
| | 3 Measure the resistance between the diagnostic connector FC001 pin 10, (U) and pin 2, (Y). |
| | Is the resistance less than 5 ohms?<br>**Yes**<br>REPAIR the SCP + and/or SCP - circuit. For additional information, refer to wiring diagrams. CLEAR the DTC. TEST the system for normal operation.<br>**No**<br>GO to H7. |
| **H7: CHECK FOR OPEN CIRCUIT ON SCP + BETWEEN THE DIAGNOSTIC CONNECTOR AND THE IC** | |
| | 1 Turn the ignition switch to the OFF position. |
| | 2 Disconnect the battery negative terminal. |
| | 3 Disconnect the IC electrical connector, FC015. |
| | 4 Measure the resistance between the diagnostic connector FC001, pin 2 (Y) and FC015, pin 20 (Y). |
| | Is the resistance less than 5 ohms?<br>**Yes**<br>GO to H8.<br>**No**<br>REPAIR the SCP + circuit. For additional information, refer to wiring diagrams. CLEAR the DTC. TEST the system for normal operation. |
| **H8: CHECK FOR OPEN CIRCUIT ON SCP - BETWEEN THE DIAGNOSTIC CONNECTOR AND THE IC** | |
| | 1 Turn the ignition switch to the OFF position. |
| | 2 Disconnect the battery negative terminal. |
| | 3 Disconnect the IC electrical connector, FC015. |
| | 4 Measure the resistance between the diagnostic connector FC001, pin 10 (U) and FC015, pin 10 (U). |
| | Is the resistance less than 5 ohms?<br>**Yes**<br>GO to M9.<br>**No**<br>REPAIR the SCP - circuit. For additional information, refer to wiring diagrams. CLEAR the DTC. TEST the system for normal operation. |
| **H9: CHECK FOR CORRECT BUS TERMINATION ON SCP +** | |

GETtheMANUALS.org

| | |
|---|---|
| | 1 Turn the ignition switch to the OFF position.<br>2 Disconnect the battery negative terminal.<br>3 Reconnect the IC electrical connector, FC015.<br>4 Measure the resistance between the diagnostic connector FC001, pin 2 (Y) and GROUND. |
| | Is the resistance 90 to 150 ohms?<br>**Yes**<br>INSTALL a new IC.<br>REFER to Section 501-12 Instrument Panel and Console.<br>CLEAR the DTC. TEST the system for normal operation.<br>**No**<br>GO to H10. |
| **H10: CHECK THE CONTINUITY OF THE FRONT ELECTRONIC MODULE (FEM) SCP + CIRCUIT** | |
| | 1 Turn the ignition switch to the OFF position.<br>2 Disconnect the battery negative terminal.<br>3 Disconnect the FEM electrical connector, FH059.<br>4 Measure the resistance between FC001, pin 2 (Y) and FH059, pin 7 (Y). |
| | Is the resistance less than 5 ohms?<br>**Yes**<br>GO to H11.<br>**No**<br>REPAIR the circuit. For additional information, refer to wiring diagrams. CLEAR the DTC. TEST the system for normal operation. |
| **H11: CHECK FOR LOSS OF SCP + TERMINATION WITHIN THE FEM** | |
| | 1 Turn the ignition switch to the OFF position.<br>2 Disconnect the battery negative terminal.<br>3 Disconnect the FEM electrical connectors, FH059, and FH060.<br>4 Measure the resistance between FH059, pin 007 (Y), and FH060, pin 011 (Y) of the FEM. (Reconnect the FEM following completion of the test). |
| | Is the resistance 140 to 220 ohms?<br>**No**<br>GO to H12.<br>**Yes**<br>INSTALL a new FEM.<br>REFER to Section 419-10 Multifunction Electronic Modules. |
| **H12: CHECK THE CONTINUITY OF THE REAR ELECTRONIC MODULE (REM) SCP + CIRCUIT** | |
| | 1 Turn the ignition switch to the OFF position.<br>2 Disconnect the battery negative terminal.<br>3 Disconnect the REM electrical connector, CA102.<br>4 Measure the resistance between FC001, pin 2 (Y) and CA102, pin 001 (Y). |
| | Is the resistance less than 5 ohms?<br>**Yes**<br>GO to H13.<br>**No**<br>REPAIR the circuit. For additional information, refer to wiring diagrams. CLEAR the DTC. TEST the system for normal operation. |
| **H13: CHECK FOR LOSS OF SCP + TERMINATION WITHIN THE REM** | |
| | 1 Turn the ignition switch to the OFF position.<br>2 Disconnect the battery negative terminal.<br>3 Disconnect the REM electrical connector, CA102.<br>4 Measure the resistance between CA102, pin 001 (Y), and CA102, pin 012 (B) of the REM. (Reconnect the REM following completion of the test). |
| | Is the resistance 140 to 220 ohms?<br>**No**<br>GO to H14.<br>**Yes**<br>INSTALL a new REM.<br>REFER to Section 419-10 Multifunction Electronic Modules. |
| **H14: CHECK CONTINUITY OF THE INSTRUMENT CLUSTER (IC) SCP + CIRCUIT** | |
| | 1 Turn the ignition switch to the OFF position.<br>2 Disconnect the battery negative terminal.<br>3 Disconnect the IC electrical connector, FC015.<br>4 Measure the resistance between FC001, pin 002 (Y) and FC015, pin 020 (Y). |
| | Is the resistance less than 5 ohms?<br>**Yes**<br>GO to H15.<br>**No**<br>REPAIR the circuit. For additional information, refer to wiring diagrams. CLEAR the DTC. TEST the system for normal operation. |
| **H15: CHECK FOR LOSS OF SCP + TERMINATION WITHIN THE INSTRUMENT CLUSTER** | |
| | 1 Turn the ignition switch to the OFF position.<br>2 Disconnect the battery negative terminal.<br>3 Disconnect the IC electrical connector, FC015.<br>4 Measure the resistance between FC015, pin 020 (Y) and FC014, pin 014 of the IC. |
| | Is the resistance 140 to 220 ohms?<br>**Yes**<br>Possible intermittent fault. Recheck DTCs.<br>**No**<br>INSTALL a new IC.<br>REFER to Section 413-01 Instrument Cluster.<br>CLEAR the DTC. TEST the system for normal operation. |

**PINPOINT TEST I : THE MODULE DOES NOT RESPOND TO THE JAGUAR APPROVED DIAGNOSTIC TESTER —REAR ELECTRONIC MODULE (REM)**

GETtheMANUALS.org

| TEST CONDITIONS | DETAILS/RESULTS/ACTIONS |
|---|---|

| | |
|---|---|
| **I1: CHECK IC FOR DAMAGE** | |
| | 1 Disconnect the REM electrical connector CA102. |
| | 2 INSPECT the REM for damage. |
| | Does the REM indicate any signs of damage?<br>**Yes**<br>INSTALL a new REM.<br>REFER to Section 419-10 Multifunction Electronic Modules.<br>CLEAR the DTC. TEST the system for normal operation.<br>**No**<br>GO to I2. |
| **I2: CHECK THE SCP + FOR SHORT CIRCUIT TO GROUND** | |
| | 1 Turn the ignition switch to the OFF position. |
| | 2 Disconnect the battery negative terminal. |
| | 3 Measure the resistance between the diagnostic connector FC001 pin 2, (Y) and GROUND. |
| | Is the resistance less than 5 ohms?<br>**Yes**<br>REPAIR the SCP + circuit. For additional information, refer to wiring diagrams. CLEAR the DTC. TEST the system for normal operation.<br>**No**<br>GO to I3. |
| **I3: CHECK THE SCP + FOR SHORT CIRCUIT TO BATTERY** | |
| | 1 Turn the ignition switch to the OFF position. |
| | 2 Disconnect the battery negative terminal. |
| | 3 Measure the resistance between the diagnostic connector FC001 pin 2, (Y) and pin 016 , BATTERY. |
| | Is the resistance less than 5 ohms?<br>**Yes**<br>REPAIR the SCP + circuit. For additional information, refer to wiring diagrams. CLEAR the DTC. TEST the system for normal operation.<br>**No**<br>GO to I4. |
| **I4: CHECK THE SCP - FOR SHORT CIRCUIT TO GROUND** | |
| | 1 Turn the ignition switch to the OFF position. |
| | 2 Disconnect the battery negative terminal. |
| | 3 Measure the resistance between the diagnostic connector FC001 pin 10, (U) and GROUND. |
| | Is the resistance less than 5 ohms?<br>**Yes**<br>REPAIR the SCP - circuit. For additional information, refer to wiring diagrams. CLEAR the DTC. TEST the system for normal operation.<br>**No**<br>GO to I5. |
| **I5: CHECK THE SCP - FOR SHORT CIRCUIT TO BATTERY** | |
| | 1 Turn the ignition switch to the OFF position. |
| | 2 Disconnect the battery negative terminal. |
| | 3 Measure the resistance between the diagnostic connector FC001 pin 10, (U) and pin 016, BATTERY (OY). |
| | Is the resistance less than 5 ohms?<br>**Yes**<br>REPAIR the SCP - circuit. For additional information, refer to wiring diagrams. CLEAR the DTC. TEST the system for normal operation.<br>**No**<br>GO to H6. |
| **I6: CHECK FOR SHORT CIRCUIT BETWEEN SCP + AND SCP -** | |
| | 1 Turn the ignition switch to the OFF position. |
| | 2 Disconnect the battery negative terminal. |
| | 3 Measure the resistance between the diagnostic connector FC001 pin 10, (U) and pin 2, (Y). |
| | Is the resistance less than 5 ohms?<br>**Yes**<br>REPAIR the SCP + and/or SCP - circuit. For additional information, refer to wiring diagrams. CLEAR the DTC. TEST the system for normal operation.<br>**No**<br>GO to H7. |
| **I7: CHECK FOR OPEN CIRCUIT ON SCP + BETWEEN THE DIAGNOSTIC CONNECTOR AND THE REM** | |
| | 1 Turn the ignition switch to the OFF position. |
| | 2 Disconnect the battery negative terminal. |
| | 3 Disconnect the REM electrical connector, CA102. |
| | 4 Measure the resistance between the diagnostic connector FC001, pin 2 (Y) and CA102, pin 001 (Y). |
| | Is the resistance less than 5 ohms?<br>**Yes**<br>GO to H8.<br>**No**<br>REPAIR the SCP + circuit. For additional information, refer to wiring diagrams. CLEAR the DTC. TEST the system for normal operation. |
| **I8: CHECK FOR OPEN CIRCUIT ON SCP - BETWEEN THE DIAGNOSTIC CONNECTOR AND THE REM** | |
| | 1 Turn the ignition switch to the OFF position. |
| | 2 Disconnect the battery negative terminal. |
| | 3 Disconnect the REM electrical connector, CA102. |
| | 4 Measure the resistance between the diagnostic connector FC001, pin 10 (U) and CA102, pin 002 (U). |
| | Is the resistance less than 5 ohms?<br>**Yes**<br>GO to M9.<br>**No**<br>REPAIR the SCP - circuit. For additional information, refer to wiring diagrams. CLEAR the DTC. TEST the system for normal operation. |
| **I9: CHECK FOR CORRECT BUS TERMINATION ON SCP +** | |
| | 1 Turn the ignition switch to the OFF position. |
| | 2 Disconnect the battery negative terminal. |

GETtheMANUALS.org

| | |
|---|---|
| | 3 Reconnect the IC electrical connector, FC015. |
| | 4 Measure the resistance between the diagnostic connector FC001, pin 2 (Y) and GROUND. |
| | Is the resistance 90 to 150 ohms?<br>**Yes**<br>INSTALL a new IC.<br>REFER to Section 501-12 Instrument Panel and Console.<br>CLEAR the DTC. TEST the system for normal operation.<br>**No**<br>GO to H10. |
| **I10: CHECK THE CONTINUITY OF THE FRONT ELECTRONIC MODULE (FEM) SCP + CIRCUIT** | |
| | 1 Turn the ignition switch to the OFF position. |
| | 2 Disconnect the battery negative terminal. |
| | 3 Disconnect the FEM electrical connector, FH059. |
| | 4 Measure the resistance between FC001, pin 2 (Y) and FH059, pin 7 (Y). |
| | Is the resistance less than 5 ohms?<br>**Yes**<br>GO to H11.<br>**No**<br>REPAIR the circuit. For additional information, refer to wiring diagrams. CLEAR the DTC. TEST the system for normal operation. |
| **I11: CHECK FOR LOSS OF SCP + TERMINATION WITHIN THE FEM** | |
| | 1 Turn the ignition switch to the OFF position. |
| | 2 Disconnect the battery negative terminal. |
| | 3 Disconnect the FEM electrical connectors, FH059, and FH060. |
| | 4 Measure the resistance between FH059, pin 007 (Y), and FH060, pin 011 (Y) of the FEM. (Reconnect the FEM following completion of the test). |
| | Is the resistance 140 to 220 ohms?<br>**No**<br>GO to H12.<br>**Yes**<br>INSTALL a new FEM.<br>REFER to Section 419-10 Multifunction Electronic Modules. |
| **I12: CHECK THE CONTINUITY OF THE REAR ELECTRONIC MODULE (REM) SCP + CIRCUIT** | |
| | 1 Turn the ignition switch to the OFF position. |
| | 2 Disconnect the battery negative terminal. |
| | 3 Disconnect the REM electrical connector, CA102. |
| | 4 Measure the resistance between FC001, pin 2 (Y) and CA102, pin 001 (Y). |
| | Is the resistance less than 5 ohms?<br>**Yes**<br>GO to H13.<br>**No**<br>REPAIR the circuit. For additional information, refer to wiring diagrams. CLEAR the DTC. TEST the system for normal operation. |
| **I13: CHECK FOR LOSS OF SCP + TERMINATION WITHIN THE REM** | |
| | 1 Turn the ignition switch to the OFF position. |
| | 2 Disconnect the battery negative terminal. |
| | 3 Disconnect the REM electrical connector, CA102. |
| | 4 Measure the resistance between CA102, pin 001 (Y), and CA102, pin 012 (B) of the REM. (Reconnect the REM following completion of the test). |
| | Is the resistance 140 to 220 ohms?<br>**No**<br>GO to H14.<br>**Yes**<br>INSTALL a new REM.<br>REFER to Section 419-10 Multifunction Electronic Modules. |
| **I14: CHECK CONTINUITY OF THE INSTRUMENT CLUSTER (IC) SCP + CIRCUIT** | |
| | 1 Turn the ignition switch to the OFF position. |
| | 2 Disconnect the battery negative terminal. |
| | 3 Disconnect the IC electrical connector, FC015. |
| | 4 Measure the resistance between FC001, pin 002 (Y) and FC015, pin 020 (Y). |
| | Is the resistance less than 5 ohms?<br>**Yes**<br>GO to H15.<br>**No**<br>REPAIR the circuit. For additional information, refer to wiring diagrams. CLEAR the DTC. TEST the system for normal operation. |
| **I15: CHECK FOR LOSS OF SCP + TERMINATION WITHIN THE INSTRUMENT CLUSTER** | |
| | 1 Turn the ignition switch to the OFF position. |
| | 2 Disconnect the battery negative terminal. |
| | 3 Disconnect the IC electrical connector, FC015. |
| | 4 Measure the resistance between FC015, pin 020 (Y) and FC014, pin 014 of the IC. |
| | Is the resistance 140 to 220 ohms?<br>**Yes**<br>Possible intermittent fault. Recheck DTCs.<br>**No**<br>INSTALL a new IC.<br>REFER to Section 413-01 Instrument Cluster.<br>CLEAR the DTC. TEST the system for normal operation. |

**PINPOINT TEST J : THE MODULE DOES NOT RESPOND TO THE JAGUAR APPROVED DIAGNOSTIC TESTER — ACTIVE DAMPING CONTROL MODULE (ADCM)**

| TEST CONDITIONS | DETAILS/RESULTS/ACTIONS |
|---|---|
| **J1: CHECK ADCM FOR DAMAGE** | |
| | 1 Disconnect the ADCM electrical connector CA011. |

GETtheMANUALS.org

| | |
|---|---|
| | 2 INSPECT the ADCM for damage. |
| | Does the ADCM indicate any signs of damage?<br>**Yes**<br>INSTALL a new ADCM.<br>REFER to Section 204-05 Vehicle Dynamic Suspension.<br>CLEAR the DTC. TEST the system for normal operation.<br>**No**<br>GO to J2. |
| **J2: CHECK THE SCP + FOR SHORT CIRCUIT TO GROUND** | |
| | 1 Turn the ignition switch to the OFF position. |
| | 2 Disconnect the battery negative terminal. |
| | 3 Measure the resistance between the diagnostic connector FC001 pin 2, (Y) and GROUND. |
| | Is the resistance less than 5 ohms?<br>**Yes**<br>REPAIR the SCP + circuit. For additional information, refer to wiring diagrams. CLEAR the DTC. TEST the system for normal operation.<br>**No**<br>GO to J3. |
| **J3: CHECK THE SCP + FOR SHORT CIRCUIT TO BATTERY** | |
| | 1 Turn the ignition switch to the OFF position. |
| | 2 Disconnect the battery negative terminal. |
| | 3 Measure the resistance between the diagnostic connector FC001 pin 2, (Y) and pin 016 , BATTERY. |
| | Is the resistance less than 5 ohms?<br>**Yes**<br>REPAIR the SCP + circuit. For additional information, refer to wiring diagrams. CLEAR the DTC. TEST the system for normal operation.<br>**No**<br>GO to J4. |
| **J4: CHECK THE SCP - FOR SHORT CIRCUIT TO GROUND** | |
| | 1 Turn the ignition switch to the OFF position. |
| | 2 Disconnect the battery negative terminal. |
| | 3 Measure the resistance between the diagnostic connector FC001 pin 10, (U) and GROUND. |
| | Is the resistance less than 5 ohms?<br>**Yes**<br>REPAIR the SCP - circuit. For additional information, refer to wiring diagrams. CLEAR the DTC. TEST the system for normal operation.<br>**No**<br>GO to J5. |
| **J5: CHECK THE SCP - FOR SHORT CIRCUIT TO BATTERY** | |
| | 1 Turn the ignition switch to the OFF position. |
| | 2 Disconnect the battery negative terminal. |
| | 3 Measure the resistance between the diagnostic connector FC001 pin 10, (U) and pin 016, BATTERY (OY). |
| | Is the resistance less than 5 ohms?<br>**Yes**<br>REPAIR the SCP - circuit. For additional information, refer to wiring diagrams. CLEAR the DTC. TEST the system for normal operation.<br>**No**<br>GO to J6. |
| **J6: CHECK FOR SHORT CIRCUIT BETWEEN SCP + AND SCP -** | |
| | 1 Turn the ignition switch to the OFF position. |
| | 2 Disconnect the battery negative terminal. |
| | 3 Measure the resistance between the diagnostic connector FC001 pin 10, (U) and pin 2, (Y). |
| | Is the resistance less than 5 ohms?<br>**Yes**<br>REPAIR the SCP + and/or SCP - circuit. For additional information, refer to wiring diagrams. CLEAR the DTC. TEST the system for normal operation.<br>**No**<br>GO to J7. |
| **J7: CHECK FOR OPEN CIRCUIT ON SCP + BETWEEN THE DIAGNOSTIC CONNECTOR AND THE ADCM** | |
| | 1 Turn the ignition switch to the OFF position. |
| | 2 Disconnect the battery negative terminal. |
| | 3 Disconnect the ADCM electrical connector, CA011. |
| | 4 Measure the resistance between the diagnostic connector FC001, pin 2 (Y) and CA011, pin 014 (Y). |
| | Is the resistance less than 5 ohms?<br>**Yes**<br>GO to J8.<br>**No**<br>REPAIR the SCP + circuit. For additional information, refer to wiring diagrams. CLEAR the DTC. TEST the system for normal operation. |
| **J8: CHECK FOR OPEN CIRCUIT ON SCP - BETWEEN THE DIAGNOSTIC CONNECTOR AND THE ADCM** | |
| | 1 Turn the ignition switch to the OFF position. |
| | 2 Disconnect the battery negative terminal. |
| | 3 Disconnect the ADCM electrical connector, CA011. |
| | 4 Measure the resistance between the diagnostic connector FC001, pin 10 (U) and CA011, pin 013 (U). |
| | Is the resistance less than 5 ohms?<br>**Yes**<br>GO to J9.<br>**No**<br>REPAIR the SCP - circuit. For additional information, refer to wiring diagrams. CLEAR the DTC. TEST the system for normal operation. |
| **J9: CHECK FOR CORRECT BUS TERMINATION ON SCP +** | |
| | 1 Turn the ignition switch to the OFF position. |
| | 2 Disconnect the battery negative terminal. |
| | 3 Reconnect the ADCM electrical connector, CA011. |
| | 4 Measure the resistance between the diagnostic connector FC001, pin 2 (Y) and GROUND. |

GETtheMANUALS.org

| | |
|---|---|
| | Is the resistance 90 to 150 ohms?<br>**Yes**<br>INSTALL a new ADCM.<br>REFER to Section 204-05 Vehicle Dynamic Suspension.<br>CLEAR the DTC. TEST the system for normal operation.<br>**No**<br>GO to J10. |
| **J10: CHECK THE CONTINUITY OF THE FRONT ELECTRONIC MODULE (FEM) SCP + CIRCUIT** | |
| | 1 Turn the ignition switch to the OFF position. |
| | 2 Disconnect the battery negative terminal. |
| | 3 Disconnect the FEM electrical connector, FH059. |
| | 4 Measure the resistance between FC001, pin 2 (Y) and FH059, pin 7 (Y). |
| | Is the resistance less than 5 ohms?<br>**Yes**<br>GO to J11.<br>**No**<br>REPAIR the circuit. For additional information, refer to wiring diagrams. CLEAR the DTC. TEST the system for normal operation. |
| **J11: CHECK FOR LOSS OF SCP + TERMINATION WITHIN THE FEM** | |
| | 1 Turn the ignition switch to the OFF position. |
| | 2 Disconnect the battery negative terminal. |
| | 3 Disconnect the FEM electrical connectors, FH059, and FH060. |
| | 4 Measure the resistance between FH059, pin 007 (Y), and FH060, pin 011 (Y) of the FEM. (Reconnect the FEM following completion of the test). |
| | Is the resistance 140 to 220 ohms?<br>**No**<br>GO to J12.<br>**Yes**<br>INSTALL a new FEM.<br>REFER to Section 419-10 Multifunction Electronic Modules. |
| **J12: CHECK THE CONTINUITY OF THE REAR ELECTRONIC MODULE (REM) SCP + CIRCUIT** | |
| | 1 Turn the ignition switch to the OFF position. |
| | 2 Disconnect the battery negative terminal. |
| | 3 Disconnect the REM electrical connector, CA102. |
| | 4 Measure the resistance between FC001, pin 2 (Y) and CA102, pin 001 (Y). |
| | Is the resistance less than 5 ohms?<br>**Yes**<br>GO to J13.<br>**No**<br>REPAIR the circuit. For additional information, refer to wiring diagrams. CLEAR the DTC. TEST the system for normal operation. |
| **J13: CHECK FOR LOSS OF SCP + TERMINATION WITHIN THE REM** | |
| | 1 Turn the ignition switch to the OFF position. |
| | 2 Disconnect the battery negative terminal. |
| | 3 Disconnect the REM electrical connector, CA102. |
| | 4 Measure the resistance between CA102, pin 001 (Y), and CA102, pin 012 (B) of the REM. (Reconnect the REM following completion of the test). |
| | Is the resistance 140 to 220 ohms?<br>**No**<br>GO to J14.<br>**Yes**<br>INSTALL a new REM.<br>REFER to Section 419-10 Multifunction Electronic Modules. |
| **J14: CHECK CONTINUITY OF THE INSTRUMENT CLUSTER (IC) SCP + CIRCUIT** | |
| | 1 Turn the ignition switch to the OFF position. |
| | 2 Disconnect the battery negative terminal. |
| | 3 Disconnect the IC electrical connector, FC015. |
| | 4 Measure the resistance between FC001, pin 002 (Y) and FC015, pin 020 (Y). |
| | Is the resistance less than 5 ohms?<br>**Yes**<br>GO to J15.<br>**No**<br>REPAIR the circuit. For additional information, refer to wiring diagrams. CLEAR the DTC. TEST the system for normal operation. |
| **J15: CHECK FOR LOSS OF SCP + TERMINATION WITHIN THE INSTRUMENT CLUSTER** | |
| | 1 Turn the ignition switch to the OFF position. |
| | 2 Disconnect the battery negative terminal. |
| | 3 Disconnect the IC electrical connector, FC015. |
| | 4 Measure the resistance between FC015, pin 020 (Y) and FC014, pin 014 of the IC. |
| | Is the resistance 140 to 220 ohms?<br>**Yes**<br>Possible intermittent fault. Recheck DTCs.<br>**No**<br>INSTALL a new IC.<br>REFER to Section 413-01 Instrument Cluster.<br>CLEAR the DTC. TEST the system for normal operation. |

## PINPOINT TEST K : THE MODULE DOES NOT RESPOND TO THE JAGUAR APPROVED DIAGNOSTIC TESTER — DRIVER'S DOOR MODULE (DDM)

| TEST CONDITIONS | DETAILS/RESULTS/ACTIONS |
|---|---|
| **K1: CHECK FOR DAMAGE** | |
| | 1 Disconnect the DDM electrical connector CA085. |
| | 2 INSPECT the DDM for damage. |

GETtheMANUALS.org

| | |
|---|---|
| | Does the DDM indicate any signs of damage?<br>**Yes**<br>INSTALL a new DDM.<br>REFER to Section 419-10 Multifunction Electronic Modules.<br>CLEAR the DTC. TEST the system for normal operation.<br>**No**<br>GO to K2. |
| **K2: CHECK THE SCP + FOR SHORT CIRCUIT TO GROUND** | |
| | 1 Turn the ignition switch to the OFF position. |
| | 2 Disconnect the battery negative terminal. |
| | 3 Measure the resistance between the diagnostic connector FC001 pin 2, (Y) and GROUND. |
| | Is the resistance less than 5 ohms?<br>**Yes**<br>REPAIR the SCP + circuit. For additional information, refer to wiring diagrams. CLEAR the DTC. TEST the system for normal operation.<br>**No**<br>GO to K3. |
| **K3: CHECK THE SCP + FOR SHORT CIRCUIT TO BATTERY** | |
| | 1 Turn the ignition switch to the OFF position. |
| | 2 Disconnect the battery negative terminal. |
| | 3 Measure the resistance between the diagnostic connector FC001 pin 2, (Y) and pin 016 , BATTERY. |
| | Is the resistance less than 5 ohms?<br>**Yes**<br>REPAIR the SCP + circuit. For additional information, refer to wiring diagrams. CLEAR the DTC. TEST the system for normal operation.<br>**No**<br>GO to K4. |
| **K4: CHECK THE SCP - FOR SHORT CIRCUIT TO GROUND** | |
| | 1 Turn the ignition switch to the OFF position. |
| | 2 Disconnect the battery negative terminal. |
| | 3 Measure the resistance between the diagnostic connector FC001 pin 10, (U) and GROUND. |
| | Is the resistance less than 5 ohms?<br>**Yes**<br>REPAIR the SCP - circuit. For additional information, refer to wiring diagrams. CLEAR the DTC. TEST the system for normal operation.<br>**No**<br>GO to K5. |
| **K5: CHECK THE SCP - FOR SHORT CIRCUIT TO BATTERY** | |
| | 1 Turn the ignition switch to the OFF position. |
| | 2 Disconnect the battery negative terminal. |
| | 3 Measure the resistance between the diagnostic connector FC001 pin 10, (U) and pin 016, BATTERY (OY). |
| | Is the resistance less than 5 ohms?<br>**Yes**<br>REPAIR the SCP - circuit. For additional information, refer to wiring diagrams. CLEAR the DTC. TEST the system for normal operation.<br>**No**<br>GO to K6. |
| **K6: CHECK FOR SHORT CIRCUIT BETWEEN SCP + AND SCP -** | |
| | 1 Turn the ignition switch to the OFF position. |
| | 2 Disconnect the battery negative terminal. |
| | 3 Measure the resistance between the diagnostic connector FC001 pin 10, (U) and pin 2, (Y). |
| | Is the resistance less than 5 ohms?<br>**Yes**<br>REPAIR the SCP + and/or SCP - circuit. For additional information, refer to wiring diagrams. CLEAR the DTC. TEST the system for normal operation.<br>**No**<br>GO to K7. |
| **K7: CHECK FOR OPEN CIRCUIT ON SCP + BETWEEN THE DIAGNOSTIC CONNECTOR AND THE DDM** | |
| | 1 Turn the ignition switch to the OFF position. |
| | 2 Disconnect the battery negative terminal. |
| | 3 Disconnect the DDM electrical connector, CA085. |
| | 4 Measure the resistance between the diagnostic connector FC001, pin 2 (Y) and CA085, pin 014 (Y). |
| | Is the resistance less than 5 ohms?<br>**Yes**<br>GO to K8.<br>**No**<br>REPAIR the SCP + circuit. For additional information, refer to wiring diagrams. CLEAR the DTC. TEST the system for normal operation. |
| **K8: CHECK FOR OPEN CIRCUIT ON SCP - BETWEEN THE DIAGNOSTIC CONNECTOR AND THE DDM** | |
| | 1 Turn the ignition switch to the OFF position. |
| | 2 Disconnect the battery negative terminal. |
| | 3 Disconnect the DDM electrical connector, CA085. |
| | 4 Measure the resistance between the diagnostic connector FC001, pin 10 (U) and CA085, pin 004 (U). |
| | Is the resistance less than 5 ohms?<br>**Yes**<br>GO to K9.<br>**No**<br>REPAIR the SCP - circuit. For additional information, refer to wiring diagrams. CLEAR the DTC. TEST the system for normal operation. |
| **K9: CHECK FOR CORRECT BUS TERMINATION ON SCP +** | |
| | 1 Turn the ignition switch to the OFF position. |
| | 2 Disconnect the battery negative terminal. |
| | 3 Reconnect the DDM electrical connector, CA085. |
| | 4 Measure the resistance between the diagnostic connector FC001, pin 2 (Y) and GROUND. |

GETtheMANUALS.org

| | |
|---|---|
| | Is the resistance 90 to 150 ohms?<br>**Yes**<br>INSTALL a new DDM.<br>REFER to Section 419-10 Multifunction Electronic Modules.<br>CLEAR the DTC. TEST the system for normal operation.<br>**No**<br>GO to K10. |
| **K10: CHECK THE CONTINUITY OF THE FRONT ELECTRONIC MODULE (FEM) SCP + CIRCUIT** | |
| | 1 Turn the ignition switch to the OFF position. |
| | 2 Disconnect the battery negative terminal. |
| | 3 Disconnect the FEM electrical connector, FH059. |
| | 4 Measure the resistance between FC001, pin 2 (Y) and FH059, pin 7 (Y). |
| | Is the resistance less than 5 ohms?<br>**Yes**<br>GO to K11.<br>**No**<br>REPAIR the circuit. For additional information, refer to wiring diagrams. CLEAR the DTC. TEST the system for normal operation. |
| **K11: CHECK FOR LOSS OF SCP + TERMINATION WITHIN THE FEM** | |
| | 1 Turn the ignition switch to the OFF position. |
| | 2 Disconnect the battery negative terminal. |
| | 3 Disconnect the FEM electrical connectors, FH059, and FH060. |
| | 4 Measure the resistance between FH059, pin 007 (Y), and FH060, pin 011 (Y) of the FEM. (Reconnect the FEM following completion of the test). |
| | Is the resistance 140 to 220 ohms?<br>**No**<br>GO to K12.<br>**Yes**<br>INSTALL a new FEM.<br>REFER to Section 419-10 Multifunction Electronic Modules. |
| **K12: CHECK THE CONTINUITY OF THE REAR ELECTRONIC MODULE (REM) SCP + CIRCUIT** | |
| | 1 Turn the ignition switch to the OFF position. |
| | 2 Disconnect the battery negative terminal. |
| | 3 Disconnect the REM electrical connector, CA102. |
| | 4 Measure the resistance between FC001, pin 2 (Y) and CA102, pin 001 (Y). |
| | Is the resistance less than 5 ohms?<br>**Yes**<br>GO to K13.<br>**No**<br>REPAIR the circuit. For additional information, refer to wiring diagrams. CLEAR the DTC. TEST the system for normal operation. |
| **K13: CHECK FOR LOSS OF SCP + TERMINATION WITHIN THE REM** | |
| | 1 Turn the ignition switch to the OFF position. |
| | 2 Disconnect the battery negative terminal. |
| | 3 Disconnect the REM electrical connector, CA102. |
| | 4 Measure the resistance between CA102, pin 001 (Y), and CA102, pin 012 (B) of the REM. (Reconnect the REM following completion of the test). |
| | Is the resistance 140 to 220 ohms?<br>**No**<br>GO to K14.<br>**Yes**<br>INSTALL a new REM.<br>REFER to Section 419-10 Multifunction Electronic Modules. |
| **K14: CHECK CONTINUITY OF THE INSTRUMENT CLUSTER (IC) SCP + CIRCUIT** | |
| | 1 Turn the ignition switch to the OFF position. |
| | 2 Disconnect the battery negative terminal. |
| | 3 Disconnect the IC electrical connector, FC015. |
| | 4 Measure the resistance between FC001, pin 002 (Y) and FC015, pin 020 (Y). |
| | Is the resistance less than 5 ohms?<br>**Yes**<br>GO to K15.<br>**No**<br>REPAIR the circuit. For additional information, refer to wiring diagrams. CLEAR the DTC. TEST the system for normal operation. |
| **K15: CHECK FOR LOSS OF SCP + TERMINATION WITHIN THE INSTRUMENT CLUSTER** | |
| | 1 Turn the ignition switch to the OFF position. |
| | 2 Disconnect the battery negative terminal. |
| | 3 Disconnect the IC electrical connector, FC015. |
| | 4 Measure the resistance between FC015, pin 020 (Y) and FC014, pin 014 of the IC. |
| | Is the resistance 140 to 220 ohms?<br>**Yes**<br>Possible intermittent fault. Recheck DTCs.<br>**No**<br>INSTALL a new IC.<br>REFER to Section 413-01 Instrument Cluster.<br>CLEAR the DTC. TEST the system for normal operation. |

## PINPOINT TEST L : THE MODULE DOES NOT RESPOND TO THE JAGUAR APPROVED DIAGNOSTIC TESTER — DYNAMIC STABILITY CONTROL MODULE (DSM)

| TEST CONDITIONS | DETAILS/RESULTS/ACTIONS |
|---|---|
| **L1: CHECK FOR DAMAGE** | |
| | 1 Disconnect the DSM electrical connector DM034. |
| | 2 INSPECT the DSM for damage. |

GETtheMANUALS.org

| | |
|---|---|
| | Does the DSM indicate any signs of damage?<br>**Yes**<br>INSTALL a new DSM.<br>REFER to Section 419-10 Multifunction Electronic Modules.<br>CLEAR the DTC. TEST the system for normal operation.<br>**No**<br>GO to L2. |
| **L2: CHECK THE SCP + FOR SHORT CIRCUIT TO GROUND** | |
| | 1 Turn the ignition switch to the OFF position. |
| | 2 Disconnect the battery negative terminal. |
| | 3 Measure the resistance between the diagnostic connector FC001 pin 2, (Y) and GROUND. |
| | Is the resistance less than 5 ohms?<br>**Yes**<br>REPAIR the SCP + circuit. For additional information, refer to wiring diagrams. CLEAR the DTC. TEST the system for normal operation.<br>**No**<br>GO to L3. |
| **L3: CHECK THE SCP + FOR SHORT CIRCUIT TO BATTERY** | |
| | 1 Turn the ignition switch to the OFF position. |
| | 2 Disconnect the battery negative terminal. |
| | 3 Measure the resistance between the diagnostic connector FC001 pin 2, (Y) and pin 016 , BATTERY. |
| | Is the resistance less than 5 ohms?<br>**Yes**<br>REPAIR the SCP + circuit. For additional information, refer to wiring diagrams. CLEAR the DTC. TEST the system for normal operation.<br>**No**<br>GO to L4. |
| **L4: CHECK THE SCP - FOR SHORT CIRCUIT TO GROUND** | |
| | 1 Turn the ignition switch to the OFF position. |
| | 2 Disconnect the battery negative terminal. |
| | 3 Measure the resistance between the diagnostic connector FC001 pin 10, (U) and GROUND. |
| | Is the resistance less than 5 ohms?<br>**Yes**<br>REPAIR the SCP - circuit. For additional information, refer to wiring diagrams. CLEAR the DTC. TEST the system for normal operation.<br>**No**<br>GO to L5. |
| **L5: CHECK THE SCP - FOR SHORT CIRCUIT TO BATTERY** | |
| | 1 Turn the ignition switch to the OFF position. |
| | 2 Disconnect the battery negative terminal. |
| | 3 Measure the resistance between the diagnostic connector FC001 pin 10, (U) and pin 016, BATTERY (OY). |
| | Is the resistance less than 5 ohms?<br>**Yes**<br>REPAIR the SCP - circuit. For additional information, refer to wiring diagrams. CLEAR the DTC. TEST the system for normal operation.<br>**No**<br>GO to L6. |
| **L6: CHECK FOR SHORT CIRCUIT BETWEEN SCP + AND SCP -** | |
| | 1 Turn the ignition switch to the OFF position. |
| | 2 Disconnect the battery negative terminal. |
| | 3 Measure the resistance between the diagnostic connector FC001 pin 10, (U) and pin 2, (Y). |
| | Is the resistance less than 5 ohms?<br>**Yes**<br>REPAIR the SCP + and/or SCP - circuit. For additional information, refer to wiring diagrams. CLEAR the DTC. TEST the system for normal operation.<br>**No**<br>GO to L7. |
| **L7: CHECK FOR OPEN CIRCUIT ON SCP + BETWEEN THE DIAGNOSTIC CONNECTOR AND THE DSM** | |
| | 1 Turn the ignition switch to the OFF position. |
| | 2 Disconnect the battery negative terminal. |
| | 3 Disconnect the DSM electrical connector, DM034. |
| | 4 Measure the resistance between the diagnostic connector FC001, pin 2 (Y) and DM034, pin 001 (Y). |
| | Is the resistance less than 5 ohms?<br>**Yes**<br>GO to L8.<br>**No**<br>REPAIR the SCP + circuit. For additional information, refer to wiring diagrams. CLEAR the DTC. TEST the system for normal operation. |
| **L8: CHECK FOR OPEN CIRCUIT ON SCP - BETWEEN THE DIAGNOSTIC CONNECTOR AND THE DSM** | |
| | 1 Turn the ignition switch to the OFF position. |
| | 2 Disconnect the battery negative terminal. |
| | 3 Disconnect the DSM electrical connector, DM034. |
| | 4 Measure the resistance between the diagnostic connector FC001, pin 10 (U) and DM034, pin 012 (U). |
| | Is the resistance less than 5 ohms?<br>**Yes**<br>GO to L9.<br>**No**<br>REPAIR the SCP - circuit. For additional information, refer to wiring diagrams. CLEAR the DTC. TEST the system for normal operation. |
| **L9: CHECK FOR CORRECT BUS TERMINATION ON SCP +** | |
| | 1 Turn the ignition switch to the OFF position. |
| | 2 Disconnect the battery negative terminal. |
| | 3 Reconnect the DSM electrical connector, DM034. |
| | 4 Measure the resistance between the diagnostic connector FC001, pin 2 (Y) and GROUND. |

GETtheMANUALS.org

| | |
|---|---|
| | Is the resistance 90 to 150 ohms?<br>**Yes**<br>INSTALL a new DSM.<br>REFER to Section 419-10 Multifunction Electronic Modules.<br>CLEAR the DTC. TEST the system for normal operation.<br>**No**<br>GO to L10. |
| **L10: CHECK THE CONTINUITY OF THE FRONT ELECTRONIC MODULE (FEM) SCP + CIRCUIT** | |
| | 1 Turn the ignition switch to the OFF position. |
| | 2 Disconnect the battery negative terminal. |
| | 3 Disconnect the FEM electrical connector, FH059. |
| | 4 Measure the resistance between FC001, pin 2 (Y) and FH059, pin 7 (Y). |
| | Is the resistance less than 5 ohms?<br>**Yes**<br>GO to L11.<br>**No**<br>REPAIR the circuit. For additional information, refer to wiring diagrams. CLEAR the DTC. TEST the system for normal operation. |
| **L11: CHECK FOR LOSS OF SCP + TERMINATION WITHIN THE FEM** | |
| | 1 Turn the ignition switch to the OFF position. |
| | 2 Disconnect the battery negative terminal. |
| | 3 Disconnect the FEM electrical connectors, FH059, and FH060. |
| | 4 Measure the resistance between FH059, pin 007 (Y), and FH060, pin 011 (Y) of the FEM. (Reconnect the FEM following completion of the test). |
| | Is the resistance 140 to 220 ohms?<br>**No**<br>GO to L12.<br>**Yes**<br>INSTALL a new FEM.<br>REFER to Section 419-10 Multifunction Electronic Modules. |
| **L12: CHECK THE CONTINUITY OF THE REAR ELECTRONIC MODULE (REM) SCP + CIRCUIT** | |
| | 1 Turn the ignition switch to the OFF position. |
| | 2 Disconnect the battery negative terminal. |
| | 3 Disconnect the REM electrical connector, CA102. |
| | 4 Measure the resistance between FC001, pin 2 (Y) and CA102, pin 001 (Y). |
| | Is the resistance less than 5 ohms?<br>**Yes**<br>GO to L13.<br>**No**<br>REPAIR the circuit. For additional information, refer to wiring diagrams. CLEAR the DTC. TEST the system for normal operation. |
| **L13: CHECK FOR LOSS OF SCP + TERMINATION WITHIN THE REM** | |
| | 1 Turn the ignition switch to the OFF position. |
| | 2 Disconnect the battery negative terminal. |
| | 3 Disconnect the REM electrical connector, CA102. |
| | 4 Measure the resistance between CA102, pin 001 (Y), and CA102, pin 012 (B) of the REM. (Reconnect the REM following completion of the test). |
| | Is the resistance 140 to 220 ohms?<br>**No**<br>GO to L14.<br>**Yes**<br>INSTALL a new REM.<br>REFER to Section 419-10 Multifunction Electronic Modules. |
| **L14: CHECK CONTINUITY OF THE INSTRUMENT CLUSTER (IC) SCP + CIRCUIT** | |
| | 1 Turn the ignition switch to the OFF position. |
| | 2 Disconnect the battery negative terminal. |
| | 3 Disconnect the IC electrical connector, FC015. |
| | 4 Measure the resistance between FC001, pin 002 (Y) and FC015, pin 020 (Y). |
| | Is the resistance less than 5 ohms?<br>**Yes**<br>GO to L15.<br>**No**<br>REPAIR the circuit. For additional information, refer to wiring diagrams. CLEAR the DTC. TEST the system for normal operation. |
| **L15: CHECK FOR LOSS OF SCP + TERMINATION WITHIN THE INSTRUMENT CLUSTER** | |
| | 1 Turn the ignition switch to the OFF position. |
| | 2 Disconnect the battery negative terminal. |
| | 3 Disconnect the IC electrical connector, FC015. |
| | 4 Measure the resistance between FC015, pin 020 (Y) and FC014, pin 014 of the IC. |
| | Is the resistance 140 to 220 ohms?<br>**Yes**<br>Possible intermittent fault. Recheck DTCs.<br>**No**<br>INSTALL a new IC.<br>REFER to Section 413-01 Instrument Cluster.<br>CLEAR the DTC. TEST the system for normal operation. |

## PINPOINT TEST M : THE MODULE DOES NOT RESPOND TO THE JAGUAR APPROVED DIAGNOSTIC TESTER — IN CAR ENTERTAINMENT (ICE) HEAD

| TEST CONDITIONS | DETAILS/RESULTS/ACTIONS |
|---|---|
| **M1: CHECK ICE FOR DAMAGE** | |
| | 1 Disconnect the ICE head electrical connector FC094. |
| | 2 INSPECT the ICE head for damage. |

GETtheMANUALS.org

| | |
|---|---|
| | Does the ICE head indicate any signs of damage?<br>**Yes**<br>INSTALL a new ICE head.<br>REFER to Section 415-01 Audio Unit.<br>CLEAR the DTC. TEST the system for normal operation.<br>**No**<br>GO to M2. |
| **M2: CHECK THE SCP + FOR SHORT CIRCUIT TO GROUND** | |
| | 1 Turn the ignition switch to the OFF position. |
| | 2 Disconnect the battery negative terminal. |
| | 3 Measure the resistance between the diagnostic connector FC001 pin 2, (Y) and GROUND. |
| | Is the resistance less than 5 ohms?<br>**Yes**<br>REPAIR the SCP + circuit. For additional information, refer to wiring diagrams. CLEAR the DTC. TEST the system for normal operation.<br>**No**<br>GO to M3. |
| **M3: CHECK THE SCP + FOR SHORT CIRCUIT TO BATTERY** | |
| | 1 Turn the ignition switch to the OFF position. |
| | 2 Disconnect the battery negative terminal. |
| | 3 Measure the resistance between the diagnostic connector FC001 pin 2, (Y) and pin 016 , BATTERY. |
| | Is the resistance less than 5 ohms?<br>**Yes**<br>REPAIR the SCP + circuit. For additional information, refer to wiring diagrams. CLEAR the DTC. TEST the system for normal operation.<br>**No**<br>GO to M4. |
| **M4: CHECK THE SCP - FOR SHORT CIRCUIT TO GROUND** | |
| | 1 Turn the ignition switch to the OFF position. |
| | 2 Disconnect the battery negative terminal. |
| | 3 Measure the resistance between the diagnostic connector FC001 pin 10, (U) and GROUND. |
| | Is the resistance less than 5 ohms?<br>**Yes**<br>REPAIR the SCP - circuit. For additional information, refer to wiring diagrams. CLEAR the DTC. TEST the system for normal operation.<br>**No**<br>GO to M5. |
| **M5: CHECK THE SCP - FOR SHORT CIRCUIT TO BATTERY** | |
| | 1 Turn the ignition switch to the OFF position. |
| | 2 Disconnect the battery negative terminal. |
| | 3 Measure the resistance between the diagnostic connector FC001 pin 10, (U) and pin 016, BATTERY (OY). |
| | Is the resistance less than 5 ohms?<br>**Yes**<br>REPAIR the SCP - circuit. For additional information, refer to wiring diagrams. CLEAR the DTC. TEST the system for normal operation.<br>**No**<br>GO to M6. |
| **M6: CHECK FOR SHORT CIRCUIT BETWEEN SCP + AND SCP -** | |
| | 1 Turn the ignition switch to the OFF position. |
| | 2 Disconnect the battery negative terminal. |
| | 3 Measure the resistance between the diagnostic connector FC001 pin 10, (U) and pin 2, (Y). |
| | Is the resistance less than 5 ohms?<br>**Yes**<br>REPAIR the SCP + and/or SCP - circuit. For additional information, refer to wiring diagrams. CLEAR the DTC. TEST the system for normal operation.<br>**No**<br>GO to M7. |
| **M7: CHECK FOR OPEN CIRCUIT ON SCP + BETWEEN THE DIAGNOSTIC CONNECTOR AND THE ICE HEAD UNIT** | |
| | 1 Turn the ignition switch to the OFF position. |
| | 2 Disconnect the battery negative terminal. |
| | 3 Disconnect the ICE electrical connector, FC094. |
| | 4 Measure the resistance between the diagnostic connector FC001, pin 2 (Y) and FC094, pin 9 (Y). |
| | Is the resistance less than 5 ohms?<br>**Yes**<br>GO to M8.<br>**No**<br>REPAIR the SCP + circuit. For additional information, refer to wiring diagrams. CLEAR the DTC. TEST the system for normal operation. |
| **M8: CHECK FOR OPEN CIRCUIT ON SCP - BETWEEN THE DIAGNOSTIC CONNECTOR AND THE ICE HEAD UNIT** | |
| | 1 Turn the ignition switch to the OFF position. |
| | 2 Disconnect the battery negative terminal. |
| | 3 Disconnect the ICE electrical connector, FC094. |
| | 4 Measure the resistance between the diagnostic connector FC001, pin 10 (U) and FC094, pin 10 (U). |
| | Is the resistance less than 5 ohms?<br>**Yes**<br>GO to M9.<br>**No**<br>REPAIR the SCP - circuit. For additional information, refer to wiring diagrams. CLEAR the DTC. TEST the system for normal operation. |
| **M9: CHECK FOR CORRECT BUS TERMINATION ON SCP +** | |
| | 1 Turn the ignition switch to the OFF position. |
| | 2 Disconnect the battery negative terminal. |
| | 3 Reconnect the ICE electrical connector, FC094. |
| | 4 Measure the resistance between the diagnostic connector FC001, pin 2 (Y) and GROUND. |

GETtheMANUALS.org

| | |
|---|---|
| | Is the resistance 90 to 150 ohms?<br>**Yes**<br>INSTALL a new ICE head unit.<br>REFER to Section 415-01 Audio Unit.<br>CLEAR the DTC. TEST the system for normal operation.<br>**No**<br>GO to M10. |
| **M10: CHECK THE CONTINUITY OF THE FRONT ELECTRONIC MODULE (FEM) SCP + CIRCUIT** | |
| | 1 Turn the ignition switch to the OFF position. |
| | 2 Disconnect the battery negative terminal. |
| | 3 Disconnect the FEM electrical connector, FH059. |
| | 4 Measure the resistance between FC001, pin 2 (Y) and FH059, pin 7 (Y). |
| | Is the resistance less than 5 ohms?<br>**Yes**<br>GO to M11.<br>**No**<br>REPAIR the circuit. For additional information, refer to wiring diagrams. CLEAR the DTC. TEST the system for normal operation. |
| **M11: CHECK FOR LOSS OF SCP + TERMINATION WITHIN THE FEM** | |
| | 1 Turn the ignition switch to the OFF position. |
| | 2 Disconnect the battery negative terminal. |
| | 3 Disconnect the FEM electrical connectors, FH059, and FH060. |
| | 4 Measure the resistance between FH059, pin 007 (Y), and FH060, pin 011 (Y) of the FEM. (Reconnect the FEM following completion of the test). |
| | Is the resistance 140 to 220 ohms?<br>**No**<br>GO to M12.<br>**Yes**<br>INSTALL a new FEM.<br>REFER to Section 419-10 Multifunction Electronic Modules. |
| **M12: CHECK THE CONTINUITY OF THE REAR ELECTRONIC MODULE (REM) SCP + CIRCUIT** | |
| | 1 Turn the ignition switch to the OFF position. |
| | 2 Disconnect the battery negative terminal. |
| | 3 Disconnect the REM electrical connector, CA102. |
| | 4 Measure the resistance between FC001, pin 2 (Y) and CA102, pin 001 (Y). |
| | Is the resistance less than 5 ohms?<br>**Yes**<br>GO to M13.<br>**No**<br>REPAIR the circuit. For additional information, refer to wiring diagrams. CLEAR the DTC. TEST the system for normal operation. |
| **M13: CHECK FOR LOSS OF SCP + TERMINATION WITHIN THE REM** | |
| | 1 Turn the ignition switch to the OFF position. |
| | 2 Disconnect the battery negative terminal. |
| | 3 Disconnect the REM electrical connector, CA102. |
| | 4 Measure the resistance between CA102, pin 001 (Y), and CA102, pin 012 (B) of the REM. (Reconnect the REM following completion of the test). |
| | Is the resistance 140 to 220 ohms?<br>**No**<br>GO to M14.<br>**Yes**<br>INSTALL a new REM.<br>REFER to Section 419-10 Multifunction Electronic Modules. |
| **M14: CHECK CONTINUITY OF THE INSTRUMENT CLUSTER (IC) SCP + CIRCUIT** | |
| | 1 Turn the ignition switch to the OFF position. |
| | 2 Disconnect the battery negative terminal. |
| | 3 Disconnect the IC electrical connector, FC015. |
| | 4 Measure the resistance between FC001, pin 002 (Y) and FC015, pin 020 (Y). |
| | Is the resistance less than 5 ohms?<br>**Yes**<br>GO to M15.<br>**No**<br>REPAIR the circuit. For additional information, refer to wiring diagrams. CLEAR the DTC. TEST the system for normal operation. |
| **M15: CHECK FOR LOSS OF SCP + TERMINATION WITHIN THE INSTRUMENT CLUSTER** | |
| | 1 Turn the ignition switch to the OFF position. |
| | 2 Disconnect the battery negative terminal. |
| | 3 Disconnect the IC electrical connector, FC015. |
| | 4 Measure the resistance between FC015, pin 020 (Y) and FC014, pin 014 of the IC. |
| | Is the resistance 140 to 220 ohms?<br>**Yes**<br>Possible intermittent fault. Recheck DTCs.<br>**No**<br>INSTALL a new IC.<br>REFER to Section 413-01 Instrument Cluster.<br>CLEAR the DTC. TEST the system for normal operation. |

## PINPOINT TEST N : THE MODULE DOES NOT RESPOND TO THE JAGUAR APPROVED DIAGNOSTIC TESTER — FRONT ELECTRONIC MODULE (FEM)

| TEST CONDITIONS | DETAILS/RESULTS/ACTIONS |
|---|---|
| **N1: CHECK FEM FOR DAMAGE** | |
| | 1 Disconnect the FEM electrical connector FH059. |
| | 2 INSPECT the FEM for damage. |

GETtheMANUALS.org

| | |
|---|---|
| | Does the FEM indicate any signs of damage?<br>**Yes**<br>INSTALL a new FEM.<br>REFER to Section 419-10 Multifunction Electronic Modules.<br>CLEAR the DTC. TEST the system for normal operation.<br>**No**<br>GO to N2. |
| **N2: CHECK THE SCP + FOR SHORT CIRCUIT TO GROUND** | |
| | 1 Turn the ignition switch to the OFF position. |
| | 2 Disconnect the battery negative terminal. |
| | 3 Measure the resistance between the diagnostic connector FC001 pin 2, (Y) and GROUND. |
| | Is the resistance less than 5 ohms?<br>**Yes**<br>REPAIR the SCP + circuit. For additional information, refer to wiring diagrams. CLEAR the DTC. TEST the system for normal operation.<br>**No**<br>GO to N3. |
| **N3: CHECK THE SCP + FOR SHORT CIRCUIT TO BATTERY** | |
| | 1 Turn the ignition switch to the OFF position. |
| | 2 Disconnect the battery negative terminal. |
| | 3 Measure the resistance between the diagnostic connector FC001 pin 2, (Y) and pin 016, BATTERY. |
| | Is the resistance less than 5 ohms?<br>**Yes**<br>REPAIR the SCP + circuit. For additional information, refer to wiring diagrams. CLEAR the DTC. TEST the system for normal operation.<br>**No**<br>GO to N4. |
| **N4: CHECK THE SCP - FOR SHORT CIRCUIT TO GROUND** | |
| | 1 Turn the ignition switch to the OFF position. |
| | 2 Disconnect the battery negative terminal. |
| | 3 Measure the resistance between the diagnostic connector FC001 pin 10, (U) and GROUND. |
| | Is the resistance less than 5 ohms?<br>**Yes**<br>REPAIR the SCP - circuit. For additional information, refer to wiring diagrams. CLEAR the DTC. TEST the system for normal operation.<br>**No**<br>GO to N5. |
| **N5: CHECK THE SCP - FOR SHORT CIRCUIT TO BATTERY** | |
| | 1 Turn the ignition switch to the OFF position. |
| | 2 Disconnect the battery negative terminal. |
| | 3 Measure the resistance between the diagnostic connector FC001 pin 10, (U) and pin 016, BATTERY (OY). |
| | Is the resistance less than 5 ohms?<br>**Yes**<br>REPAIR the SCP - circuit. For additional information, refer to wiring diagrams. CLEAR the DTC. TEST the system for normal operation.<br>**No**<br>GO to N6. |
| **N6: CHECK FOR SHORT CIRCUIT BETWEEN SCP + AND SCP -** | |
| | 1 Turn the ignition switch to the OFF position. |
| | 2 Disconnect the battery negative terminal. |
| | 3 Measure the resistance between the diagnostic connector FC001 pin 10, (U) and pin 2, (Y) |
| | Is the resistance less than 5 ohms?<br>**Yes**<br>REPAIR the SCP + and/or SCP - circuit. For additional information, refer to wiring diagrams. CLEAR the DTC. TEST the system for normal operation.<br>**No**<br>GO to N7. |
| **N7: CHECK FOR OPEN CIRCUIT ON SCP + BETWEEN THE DIAGNOSTIC CONNECTOR AND THE FEM** | |
| | 1 Turn the ignition switch to the OFF position. |
| | 2 Disconnect the battery negative terminal. |
| | 3 Disconnect the FEM electrical connector, FH059. |
| | 4 Measure the resistance between the diagnostic connector FC001, pin 2 (Y) and FH059, pin 7 (Y). |
| | Is the resistance less than 5 ohms?<br>**Yes**<br>GO to N8.<br>**No**<br>REPAIR the SCP + circuit. For additional information, refer to wiring diagrams. CLEAR the DTC. TEST the system for normal operation. |
| **N8: CHECK FOR OPEN CIRCUIT ON SCP - BETWEEN THE DIAGNOSTIC CONNECTOR AND THE FEM** | |
| | 1 Turn the ignition switch to the OFF position. |
| | 2 Disconnect the battery negative terminal. |
| | 3 Disconnect the FEM electrical connector, FH059. |
| | 4 Measure the resistance between the diagnostic connector FC001, pin 10 (U) and FH059, pin 001 (U). |
| | Is the resistance less than 5 ohms?<br>**Yes**<br>GO to N9.<br>**No**<br>REPAIR the SCP - circuit. For additional information, refer to wiring diagrams. CLEAR the DTC. TEST the system for normal operation. |
| **N9: CHECK FOR CORRECT BUS TERMINATION ON SCP +** | |
| | 1 Turn the ignition switch to the OFF position. |
| | 2 Disconnect the battery negative terminal. |
| | 3 Reconnect the FEM electrical connector, FH059. |
| | 4 Measure the resistance between the diagnostic connector FC001, pin 2 (Y) and GROUND. |

GETtheMANUALS.org

| | |
|---|---|
| | Is the resistance 80 to 160 ohms?<br>**Yes**<br>INSTALL a new FEM.<br>REFER to Section 419-10 Multifunction Electronic Modules.<br>CLEAR the DTC. TEST the system for normal operation.<br>**No**<br>GO to N10. |
| **N10: CHECK THE CONTINUITY OF THE FRONT ELECTRONIC MODULE (FEM) SCP + CIRCUIT** | |
| | 1 Turn the ignition switch to the OFF position. |
| | 2 Disconnect the battery negative terminal. |
| | 3 Disconnect the FEM electrical connector, FH059. |
| | 4 Measure the resistance between FC001, pin 2 (Y) and FH059, pin 7 (Y). |
| | Is the resistance less than 5 ohms?<br>**Yes**<br>GO to N11.<br>**No**<br>REPAIR the circuit. For additional information, refer to wiring diagrams. CLEAR the DTC. TEST the system for normal operation. |
| **N11: CHECK FOR LOSS OF SCP + TERMINATION WITHIN THE FEM** | |
| | 1 Turn the ignition switch to the OFF position. |
| | 2 Disconnect the battery negative terminal. |
| | 3 Disconnect the FEM electrical connectors, FH059, and FH060 |
| | 4 Measure the resistance between FH059, pin 007, and FH060, pin 11 of the FEM. |
| | Is the resistance 140 to 220 ohms?<br>**No**<br>GO to N12.<br>**Yes**<br>INSTALL a new FEM.<br>REFER to Section 419-10 Multifunction Electronic Modules.<br>CLEAR the DTC. TEST the system for normal operation. |
| **N12: CHECK THE CONTINUITY OF THE REAR ELECTRONIC MODULE (REM) SCP + CIRCUIT** | |
| | 1 Turn the ignition switch to the OFF position. |
| | 2 Disconnect the battery negative terminal. |
| | 3 Disconnect the REM electrical connector, CA102. |
| | 4 Measure the resistance between FC001, pin 2 (Y) and CA102, pin 001 (Y). |
| | Is the resistance less than 5 ohms?<br>**Yes**<br>GO to R1.<br>**No**<br>REPAIR the circuit. For additional information, refer to wiring diagrams. CLEAR the DTC. TEST the system for normal operation. |
| **N13: CHECK FOR LOSS OF SCP + TERMINATION WITHIN THE REM** | |
| | 1 Turn the ignition switch to the OFF position. |
| | 2 Disconnect the battery negative terminal. |
| | 3 Disconnect the REM electrical connector, CA102. |
| | 4 Measure the resistance between CA102, pin 001 (Y) and CA102, pin 012 (B) of the REM. |
| | Is the resistance 140 to 220 ohms?<br>**No**<br>GO to N14.<br>**Yes**<br>INSTALL a new FEM.<br>REFER to Section 419-10 Multifunction Electronic Modules.<br>CLEAR the DTC. TEST the system for normal operation. |
| **N14: CHECK CONTINUITY OF THE INSTRUMENT CLUSTER (IC) SCP + CIRCUIT** | |
| | 1 Turn the ignition switch to the OFF position. |
| | 2 Disconnect the battery negative terminal. |
| | 3 Disconnect the IC electrical connector, FC015. |
| | 4 Measure the resistance between FC001, pin 2 (Y) and FC015, pin 20 (Y). |
| | Is the resistance less than 5 ohms?<br>**Yes**<br>GO to N15.<br>**No**<br>REPAIR the circuit. For additional information, refer to wiring diagrams. CLEAR the DTC. TEST the system for normal operation. |
| **N15: CHECK FOR LOSS OF SCP + TERMINATION WITHIN THE INSTRUMENT CLUSTER** | |
| | 1 Turn the ignition switch to the OFF position. |
| | 2 Disconnect the battery negative terminal. |
| | 3 Disconnect the IC electrical connector, FC015. |
| | 4 Measure the resistance between FC015, pin 20 (Y) and FC14, pin 014 of the IC. |
| | Is the resistance 320 to 400 ohms?<br>**Yes**<br>Possible intermittent fault. Recheck DTCs.<br>**No**<br>INSTALL a new IC.<br>REFER to Section 413-01 Instrument Cluster.<br>CLEAR the DTC. TEST the system for normal operation. |

## PINPOINT TEST O : THE MODULE DOES NOT RESPOND TO THE JAGUAR APPROVED DIAGNOSTICS TESTER — NAVIGATION COMPUTER (NC)

| TEST CONDITIONS | DETAILS/RESULTS/ACTIONS |
|---|---|
| **O1: CHECK THE NAVIGATION COMPUTER (NC) FOR DAMAGE** | |
| | 1 Disconnect the NC electrical connector, CA258. |
| | 2 INSPECT the NC for damage. |

GETtheMANUALS.org

| | |
|---|---|
| | Does the NC indicate signs of damage?<br>**Yes**<br>INSTALL a new NC.<br>REFER to Section 419-07 Navigation System.<br>CLEAR the DTC. TEST the system for normal operation.<br>**No**<br>GO to O2. |
| **O2: CHECK THE SCP + FOR SHORT CIRCUIT TO GROUND** | |
| | 1 Turn the ignition switch to the OFF position. |
| | 2 Disconnect the battery negative terminal. |
| | 3 Measure the resistance between the diagnostic connector FC001 pin 2, (Y) and GROUND. |
| | Is the resistance less than 5 ohms?<br>**Yes**<br>REPAIR the SCP + circuit. For additional information, refer to wiring diagrams. CLEAR the DTC. TEST the system for normal operation.<br>**No**<br>GO to O3. |
| **O3: CHECK THE SCP + FOR SHORT CIRCUIT TO BATTERY** | |
| | 1 Turn the ignition switch to the OFF position. |
| | 2 Disconnect the battery negative terminal. |
| | 3 Measure the resistance between the diagnostic connector FC001 pin 2, (Y) and pin 016, BATTERY. |
| | Is the resistance less than 5 ohms?<br>**Yes**<br>REPAIR the SCP + circuit. For additional information, refer to wiring diagrams. CLEAR the DTC. TEST the system for normal operation.<br>**No**<br>GO to O4. |
| **O4: CHECK THE SCP - FOR SHORT CIRCUIT TO GROUND** | |
| | 1 Turn the ignition switch to the OFF position. |
| | 2 Disconnect the battery negative terminal. |
| | 3 Measure the resistance between the diagnostic connector FC001 pin 10, (U) and GROUND. |
| | Is the resistance less than 5 ohms?<br>**Yes**<br>REPAIR the SCP - circuit. For additional information, refer to wiring diagrams. CLEAR the DTC. TEST the system for normal operation.<br>**No**<br>GO to O5. |
| **O5: CHECK THE SCP - FOR SHORT CIRCUIT TO BATTERY** | |
| | 1 Turn the ignition switch to the OFF position. |
| | 2 Disconnect the battery negative terminal. |
| | 3 Measure the resistance between the diagnostic connector FC001 pin 10, (U) and pin 016, (OY). |
| | Is the resistance less than 5 ohms?<br>**Yes**<br>REPAIR the SCP - circuit. For additional information, refer to wiring diagrams. CLEAR the DTC. TEST the system for normal operation.<br>**No**<br>GO to O6. |
| **O6: CHECK FOR SHORT CIRCUIT BETWEEN SCP + AND SCP -** | |
| | 1 Turn the ignition switch to the OFF position. |
| | 2 Disconnect the battery negative terminal. |
| | 3 Measure the resistance between the diagnostic connector FC001 pin 10, (U) and pin 2, (Y). |
| | Is the resistance less than 5 ohms?<br>**Yes**<br>REPAIR the SCP + and/or SCP - circuit. For additional information, refer to wiring diagrams. CLEAR the DTC. TEST the system for normal operation.<br>**No**<br>GO to O7. |
| **O7: CHECK FOR OPEN CIRCUIT ON SCP + BETWEEN THE DIAGNOSTIC CONNECTOR AND THE NAVIGATION COMPUTER (NC)** | |
| | 1 Turn the ignition switch to the OFF position. |
| | 2 Disconnect the battery negative terminal. |
| | 3 Disconnect the NC electrical connector, CA258. |
| | 4 Measure the resistance between the diagnostic connector FC001, pin 2 (Y) and CA258, pin 4 (Y). |
| | Is the resistance less than 5 ohms?<br>**Yes**<br>GO to O8.<br>**No**<br>REPAIR the SCP + circuit. For additional information, refer to wiring diagrams. CLEAR the DTC. TEST the system for normal operation. |
| **O8: CHECK FOR OPEN CIRCUIT ON SCP - BETWEEN THE DIAGNOSTIC CONNECTOR AND THE NAVIGATION COMPUTER (NC)** | |
| | 1 Turn the ignition switch to the OFF position. |
| | 2 Disconnect the battery negative terminal. |
| | 3 Disconnect the NC electrical connector, CA258. |
| | 4 Measure the resistance between the diagnostic connector FC001, pin 10 (U) and CA258, pin 014 (U). |
| | Is the resistance less than 5 ohms?<br>**Yes**<br>GO to O9.<br>**No**<br>REPAIR the SCP - circuit. For additional information, refer to wiring diagrams. CLEAR the DTC. TEST the system for normal operation. |
| **O9: CHECK FOR CORRECT BUS TERMINATION ON SCP +** | |
| | 1 Turn the ignition switch to the OFF position. |
| | 2 Disconnect the battery negative terminal. |
| | 3 Reconnect the NC electrical connector, CA258. |
| | 4 Measure the resistance between the diagnostic connector FC001, pin 2 (Y) and GROUND. |

GETtheMANUALS.org

| | |
|---|---|
| | Is the resistance 150 to 210 ohms?<br>**Yes**<br>INSTALL a new NC.<br>REFER to Section 419-07 Navigation System.<br>CLEAR the DTC. TEST the system for normal operation.<br>**No**<br>GO to O10. |
| **O10: CHECK THE CONTINUITY OF THE FRONT ELECTRONIC MODULE (FEM) SCP + CIRCUIT** | |
| | 1 Turn the ignition switch to the OFF position. |
| | 2 Disconnect the battery negative terminal. |
| | 3 Disconnect the FEM electrical connector, FH059. |
| | 4 Measure the resistance between FC001, pin 2 (Y) and FH059, pin 019 (Y). |
| | Is the resistance less than 5 ohms?<br>**Yes**<br>GO to O11.<br>**No**<br>REPAIR the circuit. For additional information, refer to wiring diagrams. CLEAR the DTC. TEST the system for normal operation. |
| **O11: CHECK FOR LOSS OF SCP + TERMINATION WITHIN THE FEM** | |
| | 1 Turn the ignition switch to the OFF position. |
| | 2 Disconnect the battery negative terminal. |
| | 3 Disconnect the FEM electrical connectors, FH059, and FH060. |
| | 4 Measure the resistance between FH059, pin 019, and FH060, pin 11. |
| | Is the resistance 320 to 400 ohms?<br>**Yes**<br>GO to O12.<br>**No**<br>INSTALL a new FEM.<br>REFER to Section 419-10 Multifunction Electronic Modules.<br>CLEAR the DTC. TEST the system for normal operation. |
| **O12: CHECK THE CONTINUITY OF THE REAR ELECTRONIC MODULE (REM) SCP + CIRCUIT** | |
| | 1 Turn the ignition switch to the OFF position. |
| | 2 Disconnect the battery negative terminal. |
| | 3 Disconnect the REM electrical connector, CA102. |
| | 4 Measure the resistance between FC001, pin 2 (Y) and CA102, pin 001 (Y). |
| | Is the resistance less than 5 ohms?<br>**Yes**<br>GO to O13.<br>**No**<br>REPAIR the circuit. For additional information, refer to wiring diagrams. CLEAR the DTC. TEST the system for normal operation. |
| **O13: CHECK FOR LOSS OF SCP + TERMINATION WITHIN THE REM** | |
| | 1 Turn the ignition switch to the OFF position. |
| | 2 Disconnect the battery negative terminal. |
| | 3 Disconnect the REM electrical connector, CA102. |
| | 4 Measure the resistance between CA102, pin 001 (Y) and CA102, pin 012 (B) of the REM. |
| | Is the resistance 140 to 220 ohms?<br>**No**<br>GO to O14.<br>**Yes**<br>INSTALL a new FEM.<br>REFER to Section 419-10 Multifunction Electronic Modules.<br>CLEAR the DTC. TEST the system for normal operation. |
| **O14: CHECK CONTINUITY OF THE INSTRUMENT CLUSTER (IC) SCP + CIRCUIT** | |
| | 1 Turn the ignition switch to the OFF position. |
| | 2 Disconnect the battery negative terminal. |
| | 3 Disconnect the IC electrical connector, FC015. |
| | 4 Measure the resistance between FC001, pin 2 (Y) and FC015, pin 20 (Y). |
| | Is the resistance less than 5 ohms?<br>**Yes**<br>GO to O15.<br>**No**<br>REPAIR the circuit. For additional information, refer to wiring diagrams. CLEAR the DTC. TEST the system for normal operation. |
| **O15: CHECK FOR LOSS OF SCP + TERMINATION WITHIN THE INSTRUMENT CLUSTER (IC)** | |
| | 1 Turn the ignition switch to the OFF position. |
| | 2 Disconnect the battery negative terminal. |
| | 3 Disconnect the IC electrical connector, FC015. |
| | 4 Measure the resistance between FC015, pin 20 (Y) and FC14, pin 014 of the IC. |
| | Is the resistance 320 to 400 ohms?<br>**Yes**<br>Possible intermittent fault. Recheck DTCs.<br>**No**<br>INSTALL a new IC.<br>REFER to Section 413-01 Instrument Cluster.<br>CLEAR the DTC. TEST the system for normal operation. |

## PINPOINT TEST P : THE MODULE DOES NOT RESPOND TO THE JAGUAR APPROVED DIAGNOSTIC TESTER — RESTRAINTS CONTROL MODULE (RCM)

| TEST CONDITIONS | DETAILS/RESULTS/ACTIONS |
|---|---|
| **P1: CHECK RESTRAINTS CONTROL MODULE FOR DAMAGE** | |
| | 1 INSPECT the RCM for damage. |

GETtheMANUALS.org

| | |
|---|---|
| | Does the RCM indicate signs of damage?<br>**Yes**<br>INSTALL a new RCM. REFER to Section 501-20A Safety Belt System / 501-20B Supplemental Restraint System. CLEAR the DTC. TEST the system for normal operation.<br>**No**<br>GO to P2. |
| **P2: CHECK K-LINE FOR SHORT CIRCUIT TO GROUND** | |
| | 1 Turn the ignition switch to the OFF position. |
| | 2 Disconnect the battery negative terminal. |
| | 3 Measure the resistance between diagnostic connector FC001 pin 7 (K-line) and GROUND. |
| | Is the resistance less than 5 ohms?<br>**Yes**<br>REPAIR the circuit. For additional information, refer to wiring diagrams. CLEAR the DTC. TEST the system for normal operation.<br>**No**<br>GO to P3. |
| **P3: CHECK K-LINE FOR SHORT CIRCUIT TO BATTERY** | |
| | 1 Turn the ignition switch to the OFF position. |
| | 2 Disconnect the battery negative terminal. |
| | 3 Measure the resistance between diagnostic connector FC001 pin 7 (K-line) and pin 016, BATTERY. |
| | Is the resistance less than 5 ohms?<br>**Yes**<br>REPAIR the circuit. For additional information, refer to wiring diagrams. CLEAR the DTC. TEST the system for normal operation.<br>**No**<br>GO to P4. |
| **P4: CHECK FOR OPEN CIRCUIT ON K-LINE BETWEEN DIAGNOSTIC CONNECTOR AND RESTRAINTS CONTROL MODULE (RCM)** | |
| | 1 Turn the ignition switch to the OFF position. |
| | 2 Disconnect the battery negative terminal. |
| | 3 Disconnect the RCM electrical connector, CA114. |
| | 4 Measure the resistance between diagnostic connector FC001 pin 7 (K-line) and CA114, pin 11 (W). |
| | Is the resistance less than 5 ohms?<br>**Yes**<br>INSTALL a new RCM. REFER to Section 501-20A Safety Belt System / 501-20B Supplemental Restraint System. CLEAR the DTC. TEST the system for normal operation.<br>**No**<br>REPAIR the circuit. For additional information, refer to wiring diagrams. CLEAR the DTC. TEST the system for normal operation. |

## PINPOINT TEST Q : THE MODULE DOES NOT RESPOND TO THE JAGUAR APPROVED DIAGNOSTIC TESTER — HEADLAMP LEVELLING MODULE (ADHLS)

| TEST CONDITIONS | DETAILS/RESULTS/ACTIONS |
|---|---|
| **Q1: CHECK HEADLAMP LEVELLING MODULE FOR DAMAGE** | |
| | 1 INSPECT the ADHLS module for damage. |
| | Does the ADHLS module indicate signs of damage?<br>**Yes**<br>INSTALL a new ADHLS module.<br>REFER to Section 417-01 Exterior Lighting.<br>CLEAR the DTC. TEST the system for normal operation.<br>**No**<br>GO to Q2. |
| **Q2: CHECK K-LINE FOR SHORT CIRCUIT TO GROUND** | |
| | 1 Turn the ignition switch to the OFF position. |
| | 2 Disconnect the battery negative terminal. |
| | 3 Measure the resistance between diagnostic connector FC001 pin 7 (K-line) and GROUND. |
| | Is the resistance less than 5 ohms?<br>**Yes**<br>REPAIR the circuit. For additional information, refer to wiring diagrams. CLEAR the DTC. TEST the system for normal operation.<br>**No**<br>GO to Q3. |
| **Q3: CHECK K-LINE FOR SHORT CIRCUIT TO BATTERY** | |
| | 1 Turn the ignition switch to the OFF position. |
| | 2 Disconnect the battery negative terminal. |
| | 3 Measure the resistance between diagnostic connector FC001 pin 7 (K-line) and pin 016, BATTERY. |
| | Is the resistance less than 5 ohms?<br>**Yes**<br>REPAIR the circuit. For additional information, refer to wiring diagrams. CLEAR the DTC. TEST the system for normal operation.<br>**No**<br>GO to Q4. |
| **Q4: CHECK FOR OPEN CIRCUIT ON K-LINE BETWEEN DIAGNOSTIC CONNECTOR AND HID MODULE** | |
| | 1 Turn the ignition switch to the OFF position. |
| | 2 Disconnect the battery negative terminal. |
| | 3 Disconnect the ADHLS module electrical connector, FH012. |
| | 4 Measure the resistance between diagnostic connector FC001 pin 7 (W). (K-line) and FH12, pin 5 (W). |
| | Is the resistance less than 5 ohms?<br>**Yes**<br>INSTALL a new ADHLS module.<br>REFER to Section 417-01 Exterior Lighting.<br>CLEAR the DTC. TEST the system for normal operation.<br>**No**<br>REPAIR the circuit. For additional information, refer to wiring diagrams. CLEAR the DTC. TEST the system for normal operation. |

GETtheMANUALS.org

## PINPOINT TEST R : THE MODULE DOES NOT RESPOND TO THE JAGUAR APPROVED DIAGNOSTIC TESTER —

## PARKING AID

| TEST CONDITIONS | DETAILS/RESULTS/ACTIONS |
|---|---|
| **R1: CHECK REVERSE PARK AID MODULE FOR DAMAGE** | |
| | 1 INSPECT the parking aid module for damage. |
| | Does the parking aid module indicate signs of damage?<br>**Yes**<br>INSTALL a new parking aid module.<br>REFER to Section 413-13 Parking Aid.<br>CLEAR the DTC. TEST the system for normal operation.<br>**No**<br>GO to R2. |
| **R2: CHECK K-LINE FOR SHORT CIRCUIT TO GROUND** | |
| | 1 Turn the ignition switch to the OFF position. |
| | 2 Disconnect the battery negative terminal. |
| | 3 Measure the resistance between diagnostic connector FC001, pin 7 (K-line) and GROUND. |
| | Is the resistance less than 5 ohms?<br>**Yes**<br>REPAIR the circuit. For additional information, refer to wiring diagrams. CLEAR the DTC. TEST the system for normal operation.<br>**No**<br>GO to R3. |
| **R3: CHECK K-LINE FOR SHORT CIRCUIT TO BATTERY** | |
| | 1 Turn the ignition switch to the OFF position. |
| | 2 Disconnect the battery negative terminal. |
| | 3 Measure the resistance between diagnostic connector FC001, pin 7 (K-line) and pin 016, BATTERY. |
| | Is the resistance less than 5 ohms?<br>**Yes**<br>REPAIR the circuit. For additional information, refer to wiring diagrams. CLEAR the DTC. TEST the system for normal operation.<br>**No**<br>GO to R4. |
| **R4: CHECK FOR OPEN CIRCUIT ON K-LINE BETWEEN DIAGNOSTIC CONNECTOR AND PARKING AID MODULE** | |
| | 1 Turn the ignition switch to the OFF position. |
| | 2 Disconnect the battery negative terminal. |
| | 3 Disconnect the parking aid module electrical connector, CA112. |
| | 4 Measure the resistance between diagnostic connector FC001, pin 7 (K-line) and CA112, pin 5 |
| | Is the resistance less than 5 ohms?<br>**Yes**<br>INSTALL a new parking aid module.<br>REFER to Section 413-13 Parking Aid.<br>CLEAR the DTC. TEST the system for normal operation.<br>**No**<br>REPAIR the circuit. For additional information, refer to wiring diagrams. CLEAR the DTC. TEST the system for normal operation. |

## PINPOINT TEST S : THE MODULE DOES NOT RESPOND TO THE JAGUAR APPROVED DIAGNOSTIC TESTER — INTRUSION SENSOR

| TEST CONDITIONS | DETAILS/RESULTS/ACTIONS |
|---|---|
| **S1: CHECK INTRUSION SENSOR MODULE FOR DAMAGE** | |
| | 1 INSPECT the intrusion sensor module for damage. |
| | Does the intrusion sensor module indicate signs of damage?<br>**Yes**<br>INSTALL a new intrusion sensor module. CLEAR the DTC. TEST the system for normal operation.<br>**No**<br>GO to S2. |
| **S2: CHECK K-LINE FOR SHORT CIRCUIT TO GROUND** | |
| | 1 Turn the ignition switch to the OFF position. |
| | 2 Disconnect the battery negative terminal. |
| | 3 Measure the resistance between diagnostic connector FC001, pin 7 (K-line) and GROUND. |
| | Is the resistance less than 5 ohms?<br>**Yes**<br>REPAIR the circuit. For additional information, refer to wiring diagrams. CLEAR the DTC. TEST the system for normal operation.<br>**No**<br>GO to S3. |
| **S3: CHECK K-LINE FOR SHORT CIRCUIT TO BATTERY** | |
| | 1 Turn the ignition switch to the OFF position. |
| | 2 Disconnect the battery negative terminal. |
| | 3 Measure the resistance between diagnostic connector FC001, pin 7 (K-line) and pin 016, BATTERY. |
| | Is the resistance less than 5 ohms?<br>**Yes**<br>REPAIR the circuit. For additional information, refer to wiring diagrams. CLEAR the DTC. TEST the system for normal operation.<br>**No**<br>GO to S4. |
| **S4: CHECK FOR OPEN CIRCUIT ON K-LINE BETWEEN DIAGNOSTIC CONNECTOR AND THE INTRUSION SENSOR MODULE** | |
| | 1 Turn the ignition switch to the OFF position. |
| | 2 Disconnect the battery negative terminal. |
| | 3 Disconnect the intrusion sensor module electrical connector, CA250. |
| | 4 Measure the resistance between diagnostic connector FC001, pin 7 (K-line) and CA250, pin 008 |

GETtheMANUALS.org

| | |
|---|---|
| | Is the resistance less than 5 ohms?<br>**Yes**<br>INSTALL a new intrusion sensor module. CLEAR the DTC. TEST the system for normal operation.<br>**No**<br>REPAIR the circuit. For additional information, refer to wiring diagrams. CLEAR the DTC. TEST the system for normal operation. |

## PINPOINT TEST T : THE MODULE DOES NOT RESPOND TO THE JAGUAR APPROVED DIAGNOSTIC TESTER — ECM

• NOTE: These pinpoint tests apply only to OBD2 diagnostics. The ECM does most of it's diagnostics via CAN. See pinpoint tests "A" in this section.

| TEST CONDITIONS | DETAILS/RESULTS/ACTIONS |
|---|---|
| **T1: CHECK ECM FOR DAMAGE** | |
| | 1 INSPECT the ECM for damage. |
| | Does the ECM indicate signs of damage?<br>**Yes**<br>INSTALL a new ECM. REFER to Section 303-14A Electronic Engine Controls / 303-14B Electronic Engine Controls / 303-14C Electronic Engine Controls. Or REFER to Section 303-14A Electronic Engine Controls / 303-14B Electronic Engine Controls / 303-14C Electronic Engine Controls. CLEAR the DTC. TEST the system for normal operation.<br>**No**<br>GO to T2. |
| **T2: CHECK K-LINE FOR SHORT CIRCUIT TO GROUND** | |
| | 1 Turn the ignition switch to the OFF position. |
| | 2 Disconnect the battery negative terminal. |
| | 3 Measure the resistance between diagnostic connector FC001, pin 7 (K-line) and GROUND. |
| | Is the resistance less than 5 ohms?<br>**Yes**<br>REPAIR the circuit. For additional information, refer to wiring diagrams. CLEAR the DTC. TEST the system for normal operation.<br>**No**<br>GO to T3. |
| **T3: CHECK K-LINE FOR SHORT CIRCUIT TO BATTERY** | |
| | 1 Turn the ignition switch to the OFF position. |
| | 2 Disconnect the battery negative terminal. |
| | 3 Measure the resistance between diagnostic connector FC001, pin 7 (K-line) and pin 016, BATTERY. |
| | Is the resistance less than 5 ohms?<br>**Yes**<br>REPAIR the circuit. For additional information, refer to wiring diagrams. CLEAR the DTC. TEST the system for normal operation.<br>**No**<br>GO to T4. |
| **T4: CHECK FOR OPEN CIRCUIT ON K-LINE BETWEEN DIAGNOSTIC CONNECTOR AND ECM** | |
| | 1 Turn the ignition switch to the OFF position. |
| | 2 Disconnect the battery negative terminal. |
| | 3 Disconnect the ECM electrical connector, PI001. |
| | 4 Measure the resistance between diagnostic connector FC001, pin 7 (K-line) and PI001, pin 105. |
| | Is the resistance less than 5 ohms?<br>**Yes**<br>INSTALL a new ECM. REFER to Section 303-14A Electronic Engine Controls / 303-14B Electronic Engine Controls / 303-14C Electronic Engine Controls. Or REFER to Section 303-14A Electronic Engine Controls / 303-14B Electronic Engine Controls / 303-14C Electronic Engine Controls. CLEAR the DTC. TEST the system for normal operation.<br>**No**<br>REPAIR the circuit. For additional information, refer to wiring diagrams. CLEAR the DTC. TEST the system for normal operation. |

## PINPOINT TEST U : THE MODULE DOES NOT RESPOND TO THE JAGUAR APPROVED DIAGNOSTIC TESTER — VOICE ACTIVATED CONTROL MODULE (VACM)

| TEST CONDITIONS | DETAILS/RESULTS/ACTIONS |
|---|---|
| **U1: CHECK THE VOICE ACTIVATED CONTROL MODULE (VACM) FOR DAMAGE** | |
| | 1 INSPECT the VACM for damage. |
| | Does the VACM indicate any signs of damage?<br>**Yes**<br>INSTALL a new VACM.<br>REFER to Section 419-08 Cellular Phone.<br>CLEAR the DTC. TEST the system for normal operation.<br>**No**<br>GO to U2. |
| **U2: CHECK THAT THE TESTER IS COMMUNICATING WITH THE ICE HEAD UNIT** | |
| | 1 Turn the ignition switch to the ON position. |
| | 2 Attempt to connect to the ICE head unit using the Jaguar approved diagnostic system. (Where available) |
| | Can the tester connect to the ICE head unit?<br>**Yes**<br>GO to P1.<br>**No**<br>Carry out the SCP test for the ICE head unit. (Pinpoint test G in this section). |
| **U3: CHECK THAT THE VACM IS COMMUNICATING WITH THE ICE HEAD UNIT** | |
| | 1 Turn the ignition switch to the ON position. |
| | 2 Press the PTT button. |
| | Are the voice listening beeps heard?<br>**Yes**<br>GO to U4.<br>**No**<br>Carry out the D2B diagnostic test procedure. (Pinpoint test R in this section). |
| **U4: CHECK THAT THE VACM IS RESPONDING TO DIAGNOSTIC COMMANDS** | |
| | 1 INSTALL a new VACM. |
| | 2 Turn the ignition switch to the ON position. |

GETtheMANUALS.org

| | |
|---|---|
| | 3 Attempt to communicate with the VACM. |
| | Can the tester communicate with the VACM?<br>**Yes**<br>CLEAR the DTC. TEST the system for normal operation with the substitute VACM<br>**No**<br>INSTALL a new ICE head unit.<br>REFER to Section 415-01 Audio Unit.<br>Refit the original VACM. CLEAR the DTC. TEST the system for normal operation |

| PINPOINT TEST V : THE MODULE DOES NOT RESPOND TO THE JAGUAR APPROVED DIAGNOSTIC SYSTEM —'PHONE MODULE | |
|---|---|
| **TEST CONDITIONS** | **DETAILS/RESULTS/ACTIONS** |
| **V1: CHECK THE 'PHONE MODULE FOR DAMAGE** | |
| | 1 INSPECT the 'phone module for damage. |
| | Does the 'phone module indicate any signs of damage?<br>**Yes**<br>INSTALL a new 'phone module.<br>REFER to Section 419-08 Cellular Phone.<br>CLEAR the DTC. TEST the system for normal operation.<br>**No**<br>GO to V2. |
| **V2: CHECK THAT THE TESTER IS COMMUNICATING WITH THE ICE HEAD UNIT** | |
| | 1 Turn the ignition switch to the ON position. |
| | 2 Attempt to connect to the ICE head unit using the Jaguar approved diagnostic system (where available). |
| | Can the tester connect to the ICE head unit?<br>**Yes**<br>GO to V3.<br>**No**<br>Carry out the SCP test for the ICE head unit. (Pinpoint test G in this section). |
| **V3: CHECK THAT THE 'PHONE MODULE IS COMMUNICATING WITH THE ICE HEAD UNIT** | |
| | 1 Turn the ignition switch to the ON position. |
| | 2 Press the 'phone hard key. |
| | High-line vehicles - Is the 'phone screen displayed? Low-line vehicles - Is the 'phone icon displayed?<br>**Yes**<br>GO to V4.<br>**No**<br>Carry out the D2B diagnostic test procedure. (Pinpoint test S in this section). |
| **V4: CHECK THAT THE 'PHONE MODULE IS RESPONDING TO DIAGNOSTIC COMMANDS** | |
| | 1 INSTALL a new 'phone module.<br>REFER to Section 419-08 Cellular Phone. |
| | 2 Turn the ignition switch to the ON position. |
| | 3 Attempt to communicate with the 'phone module. |
| | Can the tester communicate with the 'phone module?<br>**Yes**<br>CLEAR the DTC. TEST the system for normal operation with the substitute 'phone module.<br>**No**<br>INSTALL a new ICE head unit.<br>REFER to Section 415-01 Audio Unit.<br>Refit the original 'phone module. CLEAR the DTC. TEST the system for normal operation |

| PINPOINT TEST W : P1573, P1777, P1696, P1609. SYMPATHETIC CODES FROM MODULES IN CAN NETWORK | |
|---|---|
| **TEST CONDITIONS** | **DETAILS/RESULTS/ACTIONS** |
| **W1: REFER TO MODULE SETTING ORIGINAL DTC.** | |
| | 1 Should any of these DTCs be set, refer to the module in the CAN network which originally set the DTC. This can be determined from the DTC itself, eg P1573 is set by throttle angle error, P1777, by torque reduction error. DTCs can be cleared in the usual manner. |
| | Are any of these DTCs set?<br>**Yes**<br>Refer to the module or sensor concerned.<br>**No**<br>Recheck DTCs. |

| PINPOINT TEST X : U2003: COMPACT DISC CHANGER NOT RESPONDING | |
|---|---|
| CAUTION: The following tests involve disconnection of the fibre optic harnesses. The harness connectors must be protected by suitable dust caps as soon as they are disconnected, or damage may result. The use of tools to unlatch connectors must be avoided, or the connector locking function may be lost. | |
| • NOTE: The following test sequence is based on a six node network. Refer to the electrical guide for network configuration for networks with less nodes. (all possible network combinations are shown in the electrical guide) | |
| • NOTE: should a break occur in the D2B ring, then codes, U2602, or U2603 will be set, depending on the location of the break. U2602 will set if the break is in the optical harness FROM the ICE head unit, (the transmitter signal) U2603 will set if the break is in the optical harness TO the ICE head unit, (the receiver signal). See Pinpoint tests V and W for D2B ring fault diagnosis. | |
| **TEST CONDITIONS** | **DETAILS/RESULTS/ACTIONS** |
| **X1: CHECK CD CHANGER MODULE, USING OPTICAL BUS TESTER** | |
| | 1 Connect the Optical Bus Tester to the fibre optic lead connector, RA02. |
| | 2 Set the Optical Bus Tester to BY-PASS. |
| | 3 CLEAR the DTC. |
| | 4 Turn the ignition switch to the ACC position. |
| | 5 Wait for 10 seconds. |
| | 6 Check for "not responding" DTCs. |
| | Is U2003 set?<br>**Yes**<br>GO to AE1.<br>**No**<br>GO to X2. |

GETtheMANUALS.org

| X2: CHECK FOR DTC U2602 OR U2603 | |
|---|---|
| | 1 Check DTCs. |
| | Are codes U2602 or U2603 logged?<br>**Yes**<br>GO to AC1.<br>**No**<br>Recheck DTCs. No break in optical harness. |

| PINPOINT TEST Y : U2008: 'PHONE MODULE NOT RESPONDING | |
|---|---|
| **TEST CONDITIONS** | **DETAILS/RESULTS/ACTIONS** |
| **Y1: CHECK 'PHONE MODULE, USING OPTICAL BUS TESTER** | |
| | 1 Connect the Optical Bus Tester to the fibre optic lead connector, RA03. |
| | 2 Set the Optical Bus Tester to BY-PASS. |
| | 3 CLEAR the DTC. |
| | 4 Turn the ignition switch to the ACC position. |
| | 5 Wait for 10 seconds. |
| | 6 Check for "not responding" DTCs. |
| | Is U2008 set?<br>**Yes**<br>GO to AE2.<br>**No**<br>GO to Y2. |
| **Y2: CHECK FOR DTC U2602 OR U2603** | |
| | 1 Check DTCs. |
| | Are codes U2602 or U2603 logged?<br>**Yes**<br>GO to AC5.<br>**No**<br>Recheck DTCs. No break in optical harness. |

| PINPOINT TEST Z : U2019: VOICE CONTROL MODULE NOT RESPONDING | |
|---|---|
| **TEST CONDITIONS** | **DETAILS/RESULTS/ACTIONS** |
| **Z1: CHECK VOICE CONTROL MODULE, USING OPTICAL BUS TESTER** | |
| | 1 Connect the Optical Bus Tester to the fibre optic lead connector, RA04. |
| | 2 Set the Optical Bus Tester to BY-PASS. |
| | 3 CLEAR the DTC. |
| | 4 Turn the ignition switch to the ACC position. |
| | 5 Wait for 10 seconds. |
| | 6 Check for "not responding" DTCs. |
| | Is U2019 set?<br>**Yes**<br>GO to AE3.<br>**No**<br>GO to Z2. |
| **Z2: CHECK FOR DTC U2602 OR U2603** | |
| | 1 Check DTCs. |
| | Are codes U2602 or U2603 logged?<br>**Yes**<br>GO to AC6.<br>**No**<br>Recheck DTCs. No break in optical harness. |

| PINPOINT TEST AA : U2613: NAVIGATION CONTROL MODULE NOT RESPONDING | |
|---|---|
| **TEST CONDITIONS** | **DETAILS/RESULTS/ACTIONS** |
| **AA1: CHECK NAVIGATION CONTROL MODULE, USING OPTICAL BUS TESTER** | |
| | 1 Connect the Optical Bus Tester to the fibre optic lead connector, RA05. |
| | 2 Set the Optical Bus Tester to BY-PASS. |
| | 3 CLEAR the DTC. |
| | 4 Turn the ignition switch to the ACC position. |
| | 5 Wait for 10 seconds. |
| | 6 Check for DTCs. |
| | Is U2613 set?<br>**Yes**<br>GO to AE4.<br>**No**<br>GO to AA2. |
| **AA2: CHECK FOR DTC U2602 OR U2603** | |
| | 1 Check DTCs. |
| | Are codes U2602 or U2603 logged?<br>**Yes**<br>GO to AC7.<br>**No**<br>Recheck DTCs. No break in optical harness. |

| PINPOINT TEST AB : U2614: AMP NOT RESPONDING | |
|---|---|
| **TEST CONDITIONS** | **DETAILS/RESULTS/ACTIONS** |
| **AB1: CHECK AMP, USING OPTICAL BUS TESTER** | |
| | 1 Connect the Optical Bus Tester to the fibre optic lead connector, RA05. |
| | 2 Set the Optical Bus Tester to BY-PASS. |
| | 3 CLEAR the DTC. |
| | 4 Turn the ignition switch to the ACC position. |
| | 5 Wait for 10 seconds. |
| | 6 Check for DTCs. |

GETtheMANUALS.org

| | |
|---|---|
| | Is U2614 set?<br>**Yes**<br>GO to AE5.<br>**No**<br>GO to AB2. |
| **AB2: CHECK FOR DTC U2602 OR U2603** | |
| | 1 Check DTCs. |
| | Are codes U2602 or U2603 logged?<br>**Yes**<br>GO to AD1.<br>**No**<br>Recheck DTCs. No break in optical harness. |

| **PINPOINT TEST AC : U2602: BREAK IN OPTICAL HARNESS FROM ICE HEAD UNIT. (TRANSMITTER)** | |
|---|---|
| **TEST CONDITIONS** | **DETAILS/RESULTS/ACTIONS** |
| **AC1: CHECK FIBRE OPTIC LEAD BETWEEN LUGGAGE COMPARTMENT JOINT AND CD CHANGER** | |
| | 1 Disconnect fibre optic connector, RA02. |
| | 2 Disconnect fibre optic connector, RA01. |
| | 3 Connect the Optical Bus Tester to the fibre optic lead connector, RA01. |
| | 4 Set the Optical Bus Tester to TX. |
| | 5 Set the Optical Bus Tester to ON. |
| | 6 Check for light pulses at the receiver pin of disconnected D2B connector, RA02. |
| | Are light pulses visible?<br>**Yes**<br>GO to AC2.<br>**No**<br>INSTALL a new telematic harness between RA03 and RA02. For additional information, refer to the electrical guide. CLEAR the DTC. TEST the system for normal operation. |
| **AC2: CHECK CABIN FIBRE OPTIC HARNESS** | |
| | 1 Disconnect the fibre optic connector, FC107. |
| | 2 Disconnect the fibre optic connector, RA01. |
| | 3 Connect the Optical Bus Tester to FC107 using adaptor lead. |
| | 4 Set the Optical Bus Tester to TX. |
| | 5 Set the Optical Bus Tester to ON. |
| | 6 Check for light pulses at the receiver pin of disconnected D2B connector, RA01. |
| | Are light pulses visible?<br>**Yes**<br>GO to AC3.<br>**No**<br>INSTALL a new cabin optical harness between RA01 and FC107. For additional information, refer to the electrical guide. CLEAR the DTC. TEST the system for normal operation. |
| **AC3: CHECK FIBRE OPTIC LEAD BETWEEN ASHTRAY AND ICE HEAD UNIT** | |
| | 1 Connect the Optical Bus Tester to FC108 using the adaptor lead. |
| | 2 Set the Optical Bus Tester to TX. |
| | 3 Set the Optical Bus Tester to ON. |
| | 4 Check for light pulses at the receiver pin of disconnected D2B connector, FC107. |
| | Are light pulses visible?<br>**Yes**<br>GO to AC4.<br>**No**<br>INSTALL a new instrument optical harness between FC107 and FC108. For additional information, refer to the electrical guide. CLEAR the DTC. TEST the system for normal operation.GO to AC4. |
| **AC4: CHECK THE ICE HEAD UNIT** | |
| | 1 Turn the ignition switch to the ACC position. |
| | 2 Wait for 10 seconds. |
| | 3 Check for light pulses at the transmitter pin of disconnected D2B connector, FC108. (Rear of ICE head unit). |
| | Are light pulses visible?<br>**Yes**<br>Recheck DTCs. No fault found in D2B system.<br>**No**<br>INSTALL a new ICE head unit,<br>REFER to Section 415-01 Audio Unit.<br>CLEAR the DTC. TEST the system for normal operation. |
| **AC5: CHECK THE FIBRE OPTIC LEAD FROM THE CD CHANGER TO THE 'PHONE MODULE** | |
| | 1 Disconnect optical connector RA02. |
| | 2 Disconnect optical connector RA03. |
| | 3 Connect the Optical Bus Tester to RA02. |
| | 4 Check for light pulses at the transmitter pin of disconnected D2B connector, RA03. |
| | Are light pulses visible?<br>**Yes**<br>GO to AC6.<br>**No**<br>INSTALL a new telematic harness between RA03 and RA02. For additional information, refer to the electrical guide. CLEAR the DTC. TEST the system for normal operation. |
| **AC6: CHECK THE FIBRE OPTIC LEAD FROM THE 'PHONE MODULE TO THE VOICE MODULE** | |
| | 1 Disconnect optical connector RA04. |
| | 2 Disconnect optical connector RA03. |
| | 3 Connect the Optical Bus Tester to RA03. |
| | 4 Check for light pulses at the transmitter pin of disconnected D2B connector, RA04. |
| | Are light pulses visible?<br>**Yes**<br>GO to AC7.<br>**No**<br>INSTALL a new telematic harness between RA03 and RA04. For additional information, refer to the electrical guide. |

GETtheMANUALS.org

| | |
|---|---|
| | CLEAR the DTC. TEST the system for normal operation. |
| **AC7: CHECK THE FIBRE OPTIC LEAD FROM THE VOICE MODULE TO THE NAVIGATION COMPUTER** | |
| | 1 Disconnect optical connector RA04. |
| | 2 Disconnect optical connector RA05. |
| | 3 Connect the Optical Bus Tester to RA04. |
| | 4 Check for light pulses at the transmitter pin of disconnected D2B connector, RA05. |
| | Are light pulses visible?<br>**Yes**<br>GO to AC8.<br>**No**<br>INSTALL a new telematic harness between RA05 and RA04. For additional information, refer to the electrical guide. CLEAR the DTC. TEST the system for normal operation. |
| **AC8: CHECK THE FIBRE OPTIC LEAD FROM THE NAVIGATION COMPUTER TO THE AMP** | |
| | 1 Disconnect optical connector RA05. |
| | 2 Disconnect optical connector RA06. |
| | 3 Connect the Optical Bus Tester to RA05. |
| | 4 Check for light pulses at the transmitter pin of disconnected D2B connector, RA06. |
| | Are light pulses visible?<br>**Yes**<br>Recheck DTCs. No fault found in D2B system.<br>**No**<br>INSTALL a new telematic harness between RA06 and RA05. For additional information, refer to the electrical guide. CLEAR the DTC. TEST the system for normal operation. |

| **PINPOINT TEST AD : U2603: BREAK IN OPTICAL HARNESS TO ICE HEAD UNIT. (RECEIVER)** | |
|---|---|
| **TEST CONDITIONS** | **DETAILS/RESULTS/ACTIONS** |
| **AD1: CHECK FIBRE OPTIC LEAD BETWEEN LUGGAGE COMPARTMENT JOINT AND AMPLIFIER** | |
| | 1 Disconnect the fibre optic connector, RA006. |
| | 2 Disconnect the fibre optic connector, RA001. |
| | 3 Connect the Optical Bus Tester to RA006. |
| | 4 Set the Optical Bus Tester to TX. |
| | 5 Set the Optical Bus Tester to ON. |
| | 6 Check for light pulses at the receiver pin of disconnected D2B connector, RA001. |
| | Are light pulses visible?<br>**Yes**<br>GO to AD2.<br>**No**<br>INSTALL a new telematic harness between RA001 and RA006. For additional information, refer to the electrical guide. CLEAR the DTC. TEST the system for normal operation. |
| **AD2: CHECK CABIN FIBRE OPTIC HARNESS** | |
| | 1 Disconnect the fibre optic connector, FC107. |
| | 2 Disconnect the fibre optic connector, RA01. |
| | 3 Connect the Optical Bus Tester to RA01 using adaptor lead, if required. |
| | 4 Set the Optical Bus Tester to TX. |
| | 5 Set the Optical Bus Tester to ON. |
| | 6 Check for light pulses at the receiver pin of disconnected D2B connector, FC107. |
| | Are light pulses visible?<br>**Yes**<br>GO to AD3.<br>**No**<br>INSTALL a new cabin optical harness between RA01 and FC107. For additional information, refer to the electrical guide. CLEAR the DTC. TEST the system for normal operation. |
| **AD3: CHECK FIBRE OPTIC LEAD BETWEEN ASHTRAY AND ICE HEAD UNIT** | |
| | 1 Disconnect the fibre optic connector, FC108. |
| | 2 Disconnect the fibre optic connector, FC107. |
| | 3 Connect the Optical Bus Tester to FC107. |
| | 4 Set the Optical Bus Tester to TX. |
| | 5 Set the Optical Bus Tester to ON. |
| | 6 Check for light pulses at the receiver pin of disconnected D2B connector, FC108. |
| | Are light pulses visible?<br>**Yes**<br>GO to AD4.<br>**No**<br>INSTALL a new instrument optical harness between FC107 and FC094. For additional information, refer to the electrical guide. CLEAR the DTC. TEST the system for normal operation. |
| **AD4: CHECK THE ICE HEAD UNIT** | |
| | 1 Connect the optical short link between the receiver and transmitter of the ICE head unit. |
| | 2 Turn the ignition switch to the ACC position. |
| | 3 Wait for 10 seconds. |
| | 4 Check for DTC. |
| | Is U2603 logged?<br>**Yes**<br>INSTALL a new ICE head unit,<br>REFER to Section 415-01 Audio Unit.<br>CLEAR the DTC. TEST the system for normal operation.<br>**No**<br>Recheck DTCs. No fault found in D2B system. |

| **PINPOINT TEST AE : ONE OR MORE D2B MODULES NOT RESPONDING. "WAKE-UP" SIGNAL FAULT** |
|---|
| • NOTE: The D2B "wake-up" signal is not a constant, but will generate a pulse at each cycle of the ignition key. The ignition key must be turned to the OFF position following each step of the tests and turned to the position indicated by the test step for each module. To avoid missing the signal, use an assistant to operate the key while reading the oscilloscope. The "wake-up" line is battery voltage, switching to 0 volts for between 50 milliseconds and 110 milliseconds as the ICE head unit sends it's signal. |

GETtheMANUALS.org

| TEST CONDITIONS | DETAILS/RESULTS/ACTIONS |
|---|---|
| **AE1: CHECK THE "WAKE-UP" SIGNAL TO THE CD CHANGER** | |
| | 1 Disconnect the CD changer electrical connector, CA267. |
| | 2 Turn the ignition switch to the ACC position. |
| | 3 Measure the voltage between CA267, pin 3 (OG) and ground, using an oscilloscope. (See note above). |
| | Does the oscilloscope show a "wake-up" signal as described?<br>**Yes**<br>GO to AF1.<br>**No**<br>Repair the circuit between CA267, pin 3 and ICE head unit electrical connector, FC094, pin 019. For additional information, refer to wiring diagrams. CLEAR the DTC. TEST the system for normal operation. |
| **AE2: CHECK THE "WAKE-UP" SIGNAL TO THE 'PHONE MODULE** | |
| | 1 Disconnect the 'Phone module electrical connector, CA261. |
| | 2 Turn the ignition switch to the ACC position. |
| | 3 Measure the voltage between CA261, pin 23 (OG) and ground, using an oscilloscope. (See note above). |
| | Does the oscilloscope show a "wake-up" signal as described?<br>**Yes**<br>GO to AF3.<br>**No**<br>Repair the circuit between CA261, pin 23 and ICE head unit electrical connector, FC094, pin 019. For additional information, refer to wiring diagrams. CLEAR the DTC. TEST the system for normal operation. |
| **AE3: CHECK THE "WAKE-UP" SIGNAL TO THE VOICE ACTIVATED CONTROL MODULE** | |
| | 1 Disconnect the Voice activated control module electrical connector, CA300. |
| | 2 Turn the ignition switch to the ACC position. |
| | 3 Measure the voltage between CA300, pin 014 (OG) and ground, using an oscilloscope. (See note above). |
| | Does the oscilloscope show a "wake-up" signal as described?<br>**Yes**<br>GO to AF2.<br>**No**<br>Repair the circuit between VJ01, pin 014 and ICE head unit electrical connector, FC094, pin 019. For additional information, refer to wiring diagrams. CLEAR the DTC. TEST the system for normal operation. |
| **AE4: CHECK THE "WAKE-UP" SIGNAL TO THE NAVIGATION COMPUTER** | |
| | 1 Disconnect the Navigation computer electrical connector, CA258. |
| | 2 Turn the ignition switch to the ACC position. |
| | 3 Measure the voltage between CA258, pin 3 (OG) and ground, using an oscilloscope. (See note above). |
| | Does the oscilloscope show a "wake-up" signal as described?<br>**Yes**<br>GO to AF4.<br>**No**<br>Repair the circuit between CA258, pin 3 and ICE head unit electrical connector, FC094, pin 019. For additional information, refer to wiring diagrams. CLEAR the DTC. TEST the system for normal operation. |
| **AE5: CHECK THE "WAKE-UP" SIGNAL TO THE AMP** | |
| | 1 Disconnect the AMP electrical connector, CA263. |
| | 2 Turn the ignition switch to the ACC position. |
| | 3 Measure the voltage between CA263, pin 5 (OG) and ground, using an oscilloscope. (See note above). |
| | Does the oscilloscope show a "wake-up" signal as described?<br>**Yes**<br>GO to AF5.<br>**No**<br>Repair the circuit between CA263, pin 5 and ICE head unit electrical connector, FC094, pin 019. For additional information, refer to wiring diagrams. CLEAR the DTC. TEST the system for normal operation. |

## PINPOINT TEST AF : ONE OR MORE D2B MODULES NOT RESPONDING. PERMANENT SUPPLY FAULT

| TEST CONDITIONS | DETAILS/RESULTS/ACTIONS |
|---|---|
| **AF1: CHECK THE PERMANENT SUPPLY TO THE CD CHANGER** | |
| | 1 Disconnect the CD changer electrical connector, CA267. |
| | 2 Measure the voltage between CA267, pin 2 (NG) and ground. |
| | Is the voltage greater than 10 volts?<br>**Yes**<br>Check the module for ground. INSTALL a new CD Changer.<br>REFER to Section 415-01 Audio Unit.<br>CLEAR the DTC. TEST the system for normal operation.<br>**No**<br>Repair the circuit between the CD changer electrical connector, CA267, pin 2, and fuse 29 of the rear power distribution box. For additional information, refer to wiring diagrams. CLEAR the DTC. TEST the system for normal operation. |
| **AF2: CHECK THE PERMANENT SUPPLY TO THE VOICE ACTIVATED CONTROL MODULE** | |
| | 1 Disconnect the voice activated control module electrical connector, CA300. |
| | 2 Measure the voltage between CA300, pin 22 (NR) and ground. |
| | Is the voltage greater than 10 volts?<br>**Yes**<br>GO to AG1.<br>**No**<br>Repair the circuit between the voice activated control module electrical connector, CA300, and pin 22, fuse 29 of the rear power distribution box. For additional information, refer to wiring diagrams. CLEAR the DTC. TEST the system for normal operation. |
| **AF3: CHECK THE PERMANENT SUPPLY TO THE 'PHONE MODULE** | |
| | 1 Disconnect the 'phone module electrical connector, CA261. |
| | 2 Measure the voltage between CA261, pins 012(NW) and 13 (NR) and ground. |
| | Is the voltage greater than 10 volts?<br>**Yes**<br>GO to AG2.<br>**No**<br>Repair the circuit between the 'phone module electrical connector, CA261, pins 012 and 13 and fuse 29 of the rear power distribution box. For additional information, refer to wiring diagrams. CLEAR the DTC. TEST the system for |

GETtheMANUALS.org

| | |
|---|---|
| | normal operation. |
| **AF4: CHECK THE PERMANENT SUPPLY TO THE NAVIGATION COMPUTER** | |
| | 1 Disconnect the Navigation computer electrical connector, CA258. |
| | 2 Measure the voltage between CA258, pin 001 (NW) and ground. |
| | Is the voltage greater than 10 volts?<br>**Yes**<br>GO to AG3.<br>**No**<br>Repair the circuit between the navigation computer electrical connector,CA258 , pin 001 and fuse 29 of the rear power distribution box. For additional information, refer to wiring diagrams. CLEAR the DTC. TEST the system for normal operation. |
| **AF5: CHECK THE PERMANENT SUPPLY TO THE AMP** | |
| | 1 Disconnect the amp electrical connector, CA258. |
| | 2 Measure the voltage between CA263, pin 3 (NG) and pin 9 (NG) and ground. |
| | Is the voltage greater than 10 volts?<br>**Yes**<br>GO to AG4.<br>**No**<br>Repair the circuit between the amp electrical connector,CA263, pin 3 (NG) and pin 9 (NG) and fuse 30 of the rear power distribution box. For additional information, refer to wiring diagrams. CLEAR the DTC. TEST the system for normal operation. |

## PINPOINT TEST AG : ONE OR MORE D2B MODULES NOT RESPONDING. ACCESSORY SWITCHED SUPPLY FAULT

| TEST CONDITIONS | DETAILS/RESULTS/ACTIONS |
|---|---|
| **AG1: CHECK THE ACCESSORY SWITCHED SUPPLY TO THE VOICE ACTIVATED CONTROL MODULE** | |
| | 1 Disconnect the voice activated control module electrical connector, CA300. |
| | 2 Turn the ignition switch to the ACC position. |
| | 3 Measure the voltage between CA300, pin 8 (WR) and ground. |
| | Is the voltage greater than 10 volts?<br>**Yes**<br>GO to AH1.<br>**No**<br>Repair the circuit between the voice activated control module electrical connector, CA300, pin 8 and the ignition switch. CLEAR the DTC. TEST the system for normal operation.<br>(This circuit includes the power distribution box, fuse 27.) |
| **AG2: CHECK THE ACCESSORY SWITCHED SUPPLY TO THE 'PHONE MODULE** | |
| | 1 Disconnect the 'phone module electrical connector, CA261. |
| | 2 Turn the ignition switch to the ACC position. |
| | 3 Measure the voltage between CA261, pin 014 (WG) and ground. |
| | Is the voltage greater than 10 volts?<br>**Yes**<br>GO to AH2.<br>**No**<br>Repair the circuit between the 'phone module electrical connector, CA261, pin 014 and the ignition switch. CLEAR the DTC. TEST the system for normal operation.<br>(This circuit includes the power distribution box, fuse 27.) |
| **AG3: CHECK THE ACCESSORY SWITCHED SUPPLY TO THE NAVIGATION COMPUTER** | |
| | 1 Disconnect the navigation computer electrical connector. |
| | 2 Turn the ignition switch to the ACC position. |
| | 3 Measure the voltage between CA258, pin 11 (WU) and ground. |
| | Is the voltage greater than 10 volts?<br>**Yes**<br>Check the module for ground. INSTALL a new navigation computer.<br>REFER to Section 419-07 Navigation System.<br>CLEAR the DTC. TEST the system for normal operation.<br>**No**<br>Repair the circuit between the navigation computer electrical connector, CA258, pin 11 and the ignition switch. CLEAR the DTC. TEST the system for normal operation.<br>(This circuit includes the power distribution box, fuse 27.) |
| **AG4: CHECK THE ACCESSORY SWITCHED SUPPLY TO THE AMP** | |
| | 1 Disconnect the amp electrical connector. |
| | 2 Turn the ignition switch to the ACC position. |
| | 3 Measure the voltage between CA263, pin 001 (WR) and ground. |
| | Is the voltage greater than 10 volts?<br>**Yes**<br>Check the module for ground. INSTALL a new amp.<br>REFER to Section 415-01 Audio Unit.<br>CLEAR the DTC. TEST the system for normal operation.<br>**No**<br>Repair the circuit between the amp electrical connector, CA263, pin 001 (WR) and the ignition switch. CLEAR the DTC. TEST the system for normal operation.<br>(This circuit includes the power distribution box, fuse 27.) |

## PINPOINT TEST AH : ONE OR MORE D2B MODULES NOT RESPONDING. IGNITION SWITCHED SUPPLY FAULT

| TEST CONDITIONS | DETAILS/RESULTS/ACTIONS |
|---|---|
| **AH1: CHECK THE IGNITION SWITCHED SUPPLY TO THE VOICE ACTIVATED CONTROL MODULE** | |
| | 1 Disconnect the voice control module electrical connector, CA300. |
| | 2 Turn the ignition switch to the ON position. |
| | 3 Measure the voltage between CA300, pin 006 (WU) and ground. |

GETtheMANUALS.org

| | |
|---|---|
| | Is the voltage greater than 10 volts?<br>**Yes**<br>Check the module for ground. INSTALL a new voice activated control module.<br>REFER to Section 419-10 Multifunction Electronic Modules.<br>CLEAR the DTC. TEST the system for normal operation.<br>**No**<br>Repair the circuit between the voice activated control module electrical connector, CA300, pin 006 and the power distribution box fuse 29. CLEAR the DTC. TEST the system for normal operation. |
| **AH2: CHECK THE IGNITION SWITCHED SUPPLY TO THE 'PHONE MODULE** | |
| | 1 Disconnect the 'phone module electrical connector, CA261. |
| | 2 Turn the ignition switch to the ON position. |
| | 3 Measure the voltage between CA261, pin 29 (WU) and ground. |
| | Is the voltage greater than 10 volts?<br>**Yes**<br>Check the module for ground. INSTALL a new 'phone module.<br>REFER to Section 419-08 Cellular Phone.<br>CLEAR the DTC. TEST the system for normal operation.<br>**No**<br>Repair the circuit between the 'phone module electrical connector, CA261, pin 29 and the power distribution box fuse 29. CLEAR the DTC. TEST the system for normal operation. |

GETtheMANUALS.org

# Module Configuration - Module Configuration

Diagnosis and Testing

## Principles of Operation

Module Configuration

There are two modes of configuration data. The first type requires configuration information so that the module can interact with the vehicle correctly. This information will be transferred to the new module using the Jaguar Approved Diagnostic System, so that it will contain the same settings as the old module.

Modules which require configuration when installing a replacement module are:

- Engine control module (ECM)
- Transmission control module (TCM)
- Audio unit
- Drivers door module (DDM)
- Rear electronic module (REM)
- Front electronic module (FEM)
- Amplifier
- Intrusion sensor module
- Multifunction voice activated control module
- Headlamp levelling module (ADHLS)
- Electronic park brake (EPB) module
- Instrument cluster and message centre
- Climate control module

Customer Driven Preferences

The second type of configuration data is customer preference driven. These are items that the customer may or may not want to have enabled. Typically, customer preference items can be toggled on or off by the use of a compatible scan tool. You may need to ask the customer which preferences they had enabled prior to installation of the new module, although after installation they will automatically learn the settings by receiving information from existing modules.

To carry out the customer configuration process, use the Jaguar Approved Diagnostic System. Refer to the Dealer Options Index for modules on the vehicle that have customer preference items. Configure the items as needed.

Modules which can be configured with dealer options are:

- The FEM.
- The instrument cluster and message centre.
- TCM (market configuration).
- ECM (market configuration).
- Intrusion sensor module.
- Multifunction voice activated control module (market configuration).
- Audio unit (market configuration)

GETtheMANUALS.org

# Wiring Harnesses - Wiring Harness

Description and Operation

## Introduction

CAUTION: Do **not** use any other heat shrink sleeve other than the approved glue lined heat shrink sleeve mentioned in the repair procedure.

The purpose of this document is to promote quick and efficient minor repair to harness connectors or cables using approved methods and the wiring harness repair kit. Repairs may only be made to cables and connectors which have been mechanically, **not electrically** damaged. It also applies where the whole extent of the damage can be clearly identified and rectified.

Care and neatness are essential requirements in making a perfect repair.

### Caution:

At the time of this first issue of the Harness Repair Guide, do not approve repairs to any of the following circuits:

- Any media orientated system transport network harnesses.
- Supplement restraint system (SRS) firing circuits (Air bags).
- Link lead assembles, which are unique to safety critical circuits such as anti-lock brake system (ABS) and thermocouple circuits. An example of this is the ABS wheel speed sensors with moulded connectors.
- 4. Screened cables, leads and wiring harness(s).

**If any harness(s) with defective electrical connector terminals or wires from the above circuits are a concern, new components must be installed.**

## Repair Kit

CAUTION: Where the repair procedure indicates that a glue lined heat shrink sleeve should be applied, apply sufficient heat to the glue lined heat shrink to melt the glue in order to provide a water tight seal. Do **not** over heat the glue lined heat shrink sleeve so that the wiring harness insulation becomes damaged.

The wiring harness repair kit has been produced which comprises:

- Pre-terminated wiring harness(s) of different sizes and types
- Three sizes of butt splice connectors
- A selection of colored cable identification sleeves
- Two sizes of glue lined heat shrink sleeves
- Crimping pliers
- A wire cutter and insulation stripper
- An electrical connector terminal extraction handle and tips

A suitable heat source, for shrinking heat shrink sleeves will be required.

The pre-insulated diamond grip range of electrical connector terminals and in-line, butt splice connectors contained within the wiring harness repair kit are the **only** acceptable product for the repairs of wiring harnesses. The butt connectors not only grip the wire but also the insulation, making a very secure joint.

If an electrical connector terminal is not included in the wiring harness repair kit then approval for the repair is **NOT** given and in these circumstances a new wiring harness must be installed.

### Pre-Terminated Wiring Harness(s) and Butt Splice Connectors

All pre-terminated wiring harness(s) and butt splice connectors in the wiring harness repair kit are contained in bags which can be resealed after use. Each bag is marked with the part number of the items stored within the bag. Each storage compartment in the wiring harness repair kit is identified with the corresponding part number. Make sure that pre-terminated wiring harness(s) and connectors are not mixed up it is advisable to only open one bag at a time and to reseal the bag securely before opening another bag. Also, replace the bag in its mating part number compartment within the case.

The pre-terminated wiring harness(s) are supplied with the insulation in one of three colors, red, blue or yellow. The colors do not apply to any particular circuit but to the harness wire size. See the Relationship Table in the Repair Method section.

Butt splice connectors are also supplied with red, blue or yellow coverings, which must be matched to the pre-terminated wiring harness insulation color.

Pre-Terminated Wiring Harness(s)

GETtheMANUALS.org

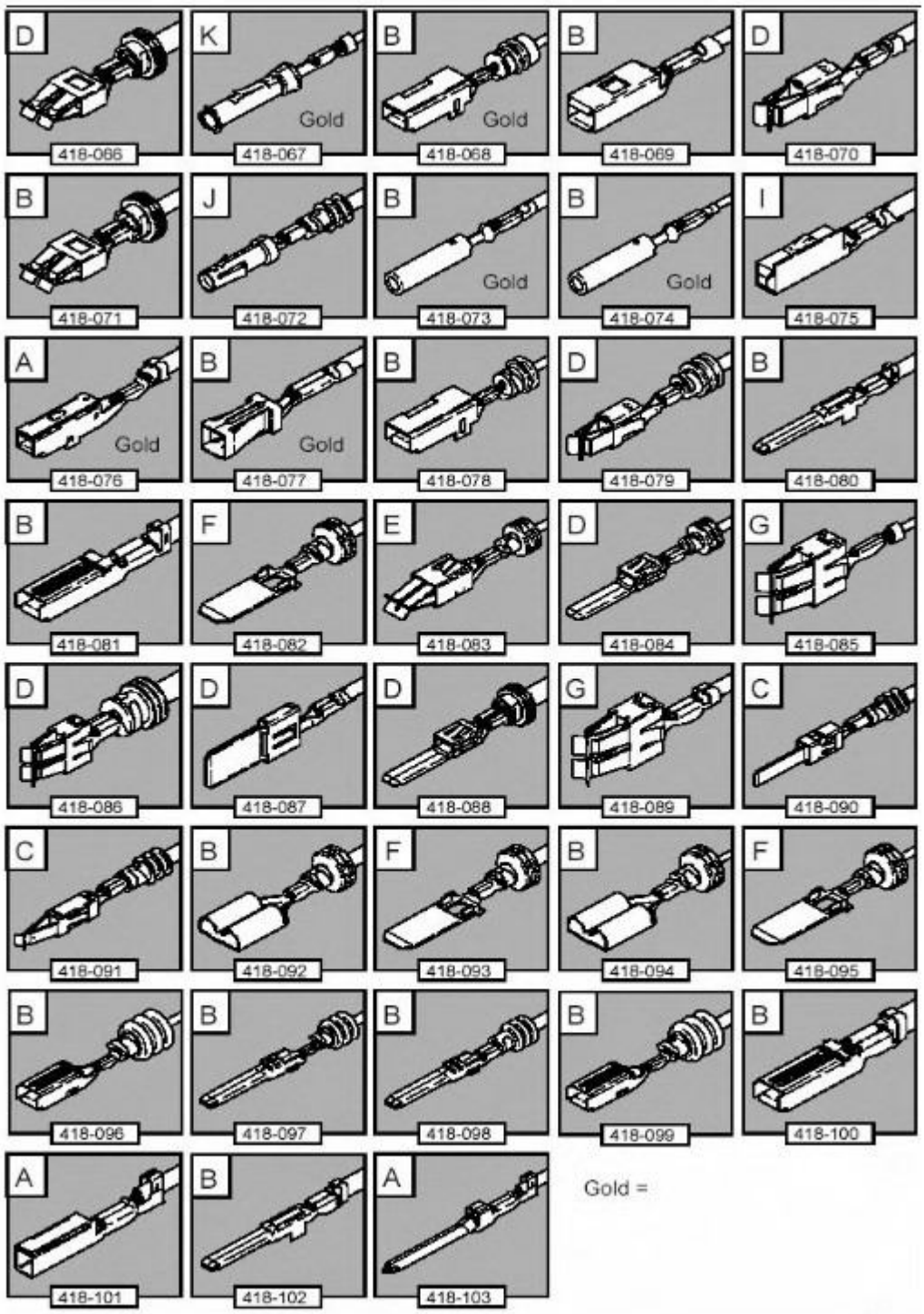


E130741

The illustration shows:

- The pre-terminated wiring harness(s) which are included in the wiring harness repair kit
- The part number of the pre-terminated wiring harness
- The letter showing the extractor tip which must be used to remove this type of electrical connector terminal
- Those electrical connector terminals which are gold

Some of the pre-terminated wiring harness(s) have seals installed to the insulation for sealed connector applications. It is essential for prevention of moisture ingress that a sealed pre-terminated wiring harness must be used where a sealed terminal was removed.

CAUTION: Where the repair procedure indicates that a glue lined heat shrink sleeve should be applied, apply sufficient heat to the glue lined heat shrink to melt the glue in order to provide a water tight seal. Do **not** over heat the glue lined heat shrink sleeve so that the wiring harness insulation becomes damaged.

Two sizes of heat shrink sleeving are supplied in the wiring harness repair kit. Each heat shrink sleeve contains a sealant glue. These must be used when connecting wiring harness(s) or electrical connector terminal(s) at all times. The smaller diameter heat shrink sleeve is to be used with the red and blue butt splice connectors and the larger diameter sleeve with the yellow butt splice connectors.

For ease and speed, some of the pre-terminated wiring harness(s) may already have the insulation partly stripped at the splice end. If the repair requires insulation to be stripped from the cable, refer to the Relationship Table for the correct length of insulation to be stripped.

GETtheMANUALS.org

The Pre-Terminated Wiring Harness(s) illustration shows the electrical connector terminal type, the part number of the pre-terminated wiring harness and the letter of the extractor tip which must be used to extract the electrical connector terminal from the connector housing. Additionally, those electrical connector terminal(s) which are gold are identified, all others are therefore, tinned and not gold.

Wiring Harness Cable Identification Sleeves

A selection of colored sleeves are contained in the wiring harness repair kit for maintaining the wiring harness cable identification on the pre-terminated wiring harness. Place the correct colored sleeve(s) over the pre-terminated wiring harness insulation as near to the electrical connector as possible with the main wiring harness cable color nearest to the electrical connector.

For example, if the original wiring harness cable color is pink with a black trace put the pink wiring harness cable identification sleeve on the pre-terminated wiring harness first followed by a black sleeve, and slide both along the wiring harness cable to the electrical connector terminal.

## Extraction Handle and Tips

The extraction handle, in conjunction with the correct tip, is used to remove a terminal from an electrical connector. Each tip contained in the wiring harness repair kit is marked with an identification letter, A to K inclusive. Each tip has been specially designed to extract a particular type of electrical connector terminal. The use of any other tool is **not** recommended and is liable to cause damage to the electrical connector. The tip is fastened to the handle by a screw which holds the tip firmly yet allows it to be easily replaced.

Extraction Handle and Tips

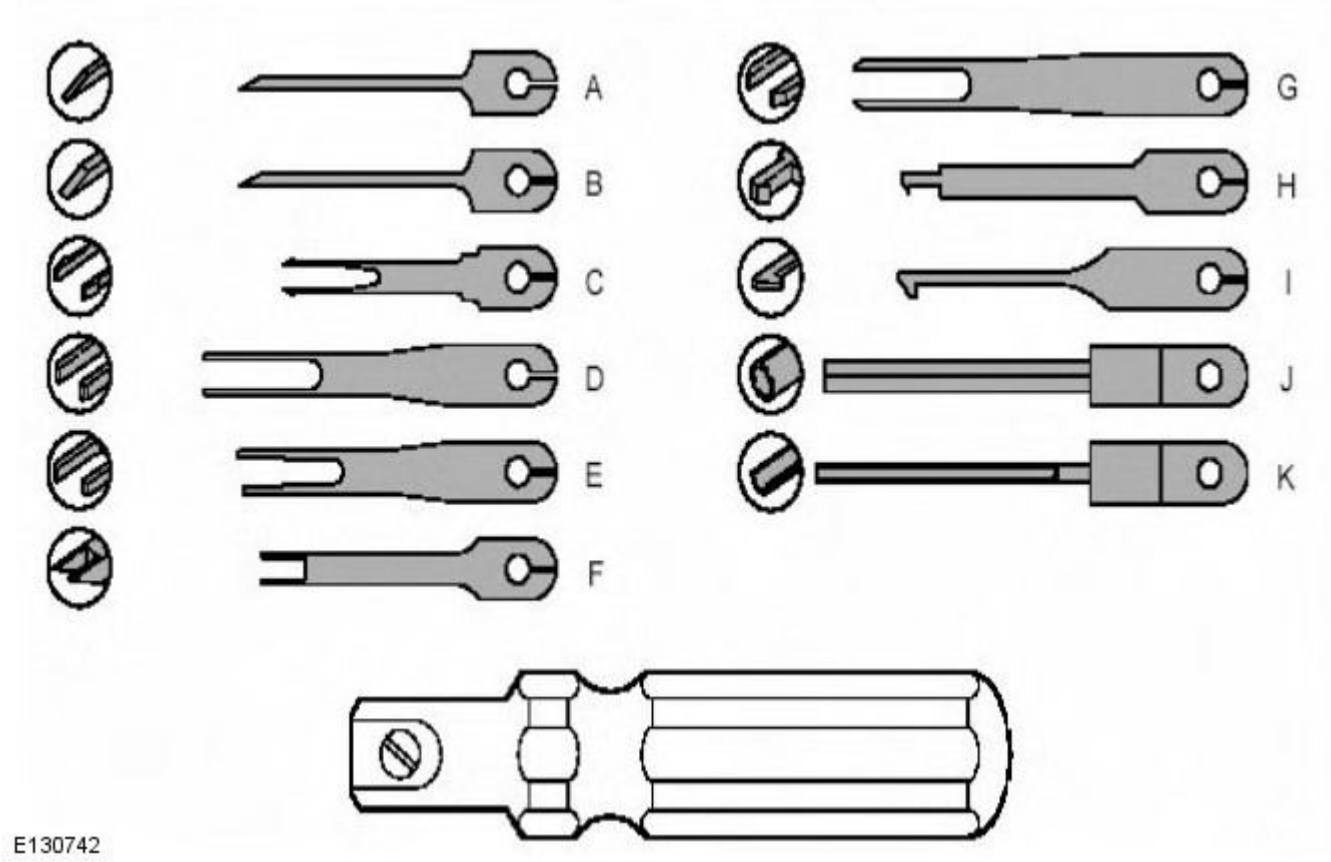


## Insulation Stripper

The moving jaw has an adjuster wheel which has a series of holes in it. Turning the wheel and placing the cable in the matching size hole will automatically adjust the jaw to the correct pressure. Note that some wiring harness(s) may have a harder insulation and slight adjustment of the wheel may be needed to make a clean strip but exercise care not to damage the wire.

Insulation Stripper

GETtheMANUALS.org

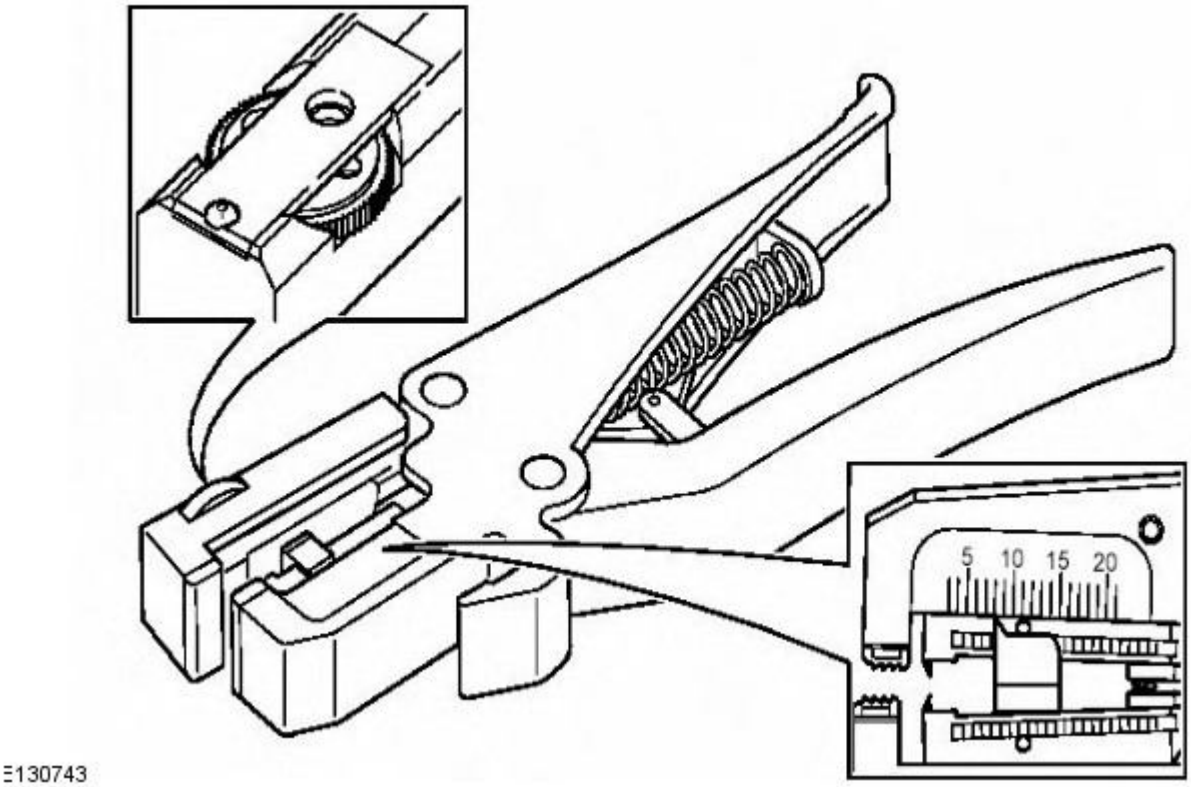


By pressing the outer edges of the wiring harness cable length stop together the adjuster can be slid up or down the jaw. This decreases or increases the length by which the wiring harness cable insulation will be stripped from the pre-terminated wiring harness or wiring harness wire. The adjuster has a position indicator to align with a graduated scale and this sets the correct length in millimetres, of insulation to be stripped. The amount of insulation to be stripped is shown in the Relationship Table.

The illustration shows the insulation stripper tool and a wiring harness correctly gripped in the jaws. A wire cutter is provided on the outer side of the fixed jaw.

Cable Correctly Gripped in Stripper Blades

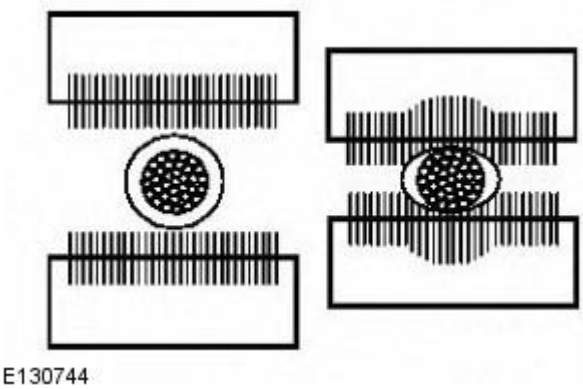


**Crimping Pliers**

Crimping Pliers

GETtheMANUALS.org

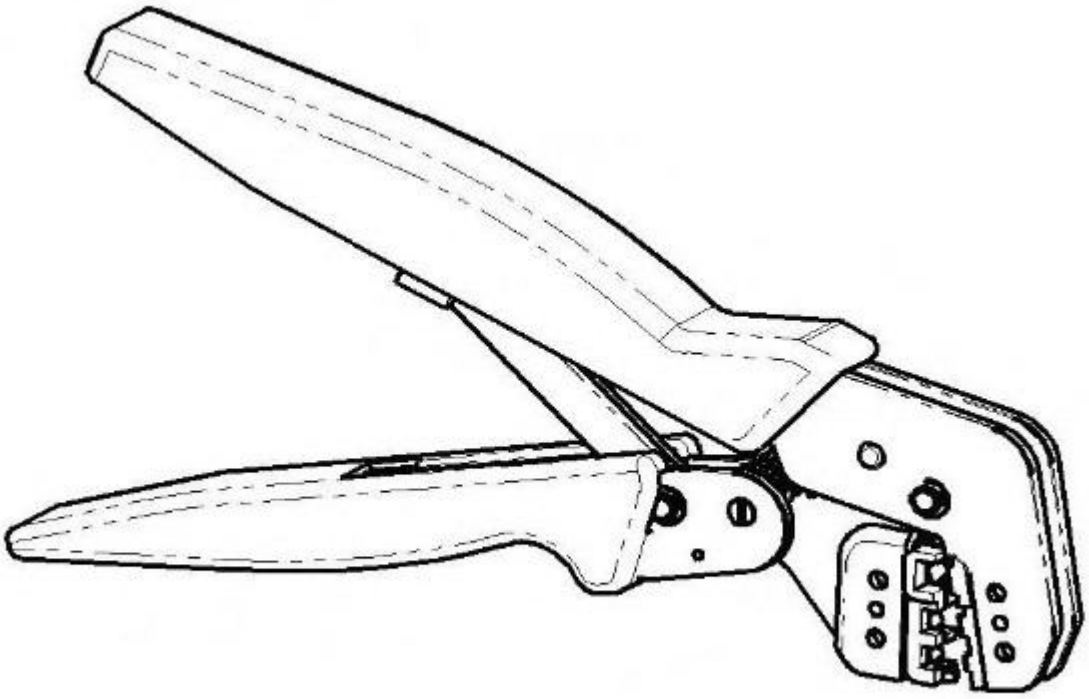

E130745

The crimping pliers have a moving jaw and a stationary jaw, with three different sized crimping enclosures. Each of the enclosures is identified by a red, blue or yellow coloured dot which corresponds to the three colours of the pre-terminated wiring harness(s) and butt splice connector colors.

### List of Parts

| Description | Part Number | Quantity |
|---|---|---|
| Wiring Harness Repair Kit | 418-S065 | 1 |
| Pre-Terminated Wiring Harness(s) | 418-066 to 418-103 inclusive | 10 each |
| Glue Lined Heat Shrink Pack – small diameter | 418-104 | 25 per pack |
| Glue Lined Heat Shrink Pack – larger diameter | 418-105 | 10 per pack |
| Case Assembly Comprising – carry case, lid, inner lid, base, insert, trays foam spacers | 418-106 | 1 |
| Butt Splice Connector – Red | 418-107 | 50 per pack |
| Butt Splice Connector – Blue | 418-108 | 50 per pack |
| Butt Splice Connector – Yellow | 418-109 | 20 per pack |
| Extraction Tool Handle | 418-110 | 1 |
| Extraction Tip Pack consists of 2 spare screws plus | 418-S111 | 1 |
| Tip A | 418-118 | 1 |
| Tip B | 418-119 | 1 |
| Tip C | 418-120 | 1 |
| Tip D | 418-121 | 1 |
| Tip E | 418-122 | 1 |
| Tip F | 418-123 | 1 |
| Tip G | 418-124 | 1 |
| Tip H | 418-125 | 1 |
| Tip I | 418-126 | 1 |
| Tip J | 418-127 | 1 |
| Tip K | 418-128 | 1 |
| Sleeve Identification Pack – for Red insulation | 418-112 | 500 |
| Sleeve Identification Pack – for Blue insulation | 418-113 | 500 |
| Sleeve Identification Pack – for Yellow insulation | 418-114 | 500 |
| Instruction Manual | JTP 593 | 1 |
| Crimping Pliers | YRW500010 | 1 |
| Wire Stripping Tool | 418-117 | 1 |

Items can be ordered from:

SPX United Kingdom Limited

Ironstone Way

Brixworth

Northants

NN6 9UD

United Kingdom

Telephone: +44 (0) 1327 704461

Fax: +44 (0) 1327 706632

GETtheMANUALS.org

### Repair Methods

CAUTION: **Several different types and sizes of terminal may be found in a single electrical connector housing.**

It is necessary to identify:

- The conductor (wire) size of the affected wiring harness
- The electrical connector range from which the damaged wiring harness is to be removed
- The terminal type

Use of the approved diagnostic tool will greatly assist in the quick identification of electrical connectors and faulty pin terminal(s).

Reference can also be made to the vehicle Electrical Guides, held by Dealers, to identify wiring harness(s) and electrical connector(s).

By using the Relationship Table, the wiring harness conductor (wire) size can be related to a suitable pre-terminated wiring harness by the color of the insulation. Also, the correct length of insulation to be stripped from the wiring harness lead is identified.

### Relationship Table

| CABLE RANGE | SPLICE | STRIP LENGTH |
|---|---|---|
| 0.35 $mm^2$ to 1.50 $mm^2$ | RED | 6.00 to 7.00 mm |
| 1.00 $mm^2$ to 2.50 $mm^2$ | BLUE | 6.00 to 7.00 mm |
| 4.00 $mm^2$ to 6.00 $mm^2$ | YELLOW | 9.00 to 9.50 mm |

### Electrical Connector Terminal Extraction

It must be noted that some electrical connector(s) have anti-backout devices which prevent the terminals from being removed from the electrical connector. Some examples of these are shown in following illustrations. The anti-backout device must be released before attempting to remove the terminal from the electrical connector. Some anti-backout devices require a special tip to release the device and these have been included in the kit. Most can be released by carefully using a suitable small screwdriver.

Various types of electrical connector have seals installed internally or externally to prevent moisture ingress. These normally do not have to be removed but make sure that they are installed when the electrical connectors are connected.

The illustrations show examples of each tip used on different types of electrical connector(s). There are a large number of different types of electrical connector used on vehicles therefore only one example using each tip is shown. Technicians experience and judgement will dictate which type of tip should be used for those electrical connector(s) which are not shown. Care should be exercised to avoid further damage when removing the terminals from the electrical connector.

• NOTE: **Examples of the extraction tips and anti-backout tips.**

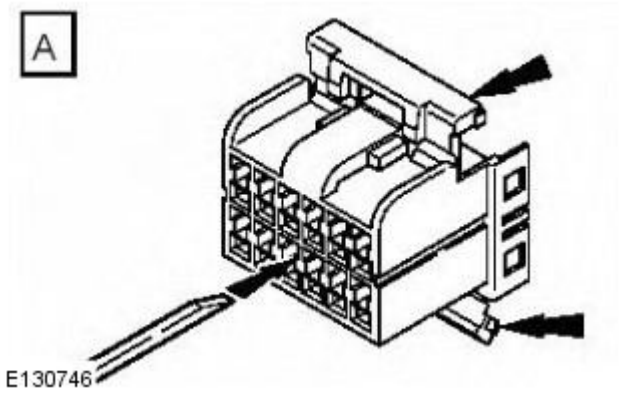


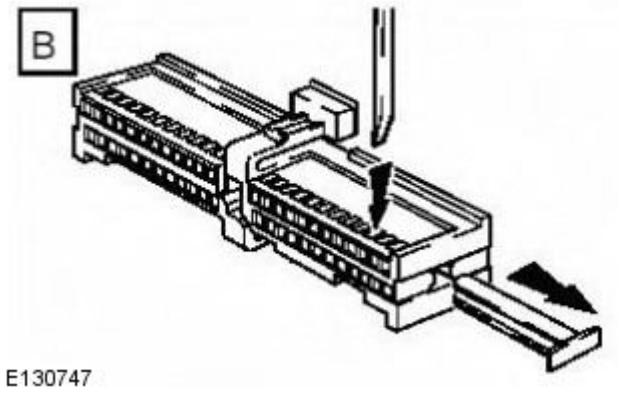


GETtheMANUALS.org

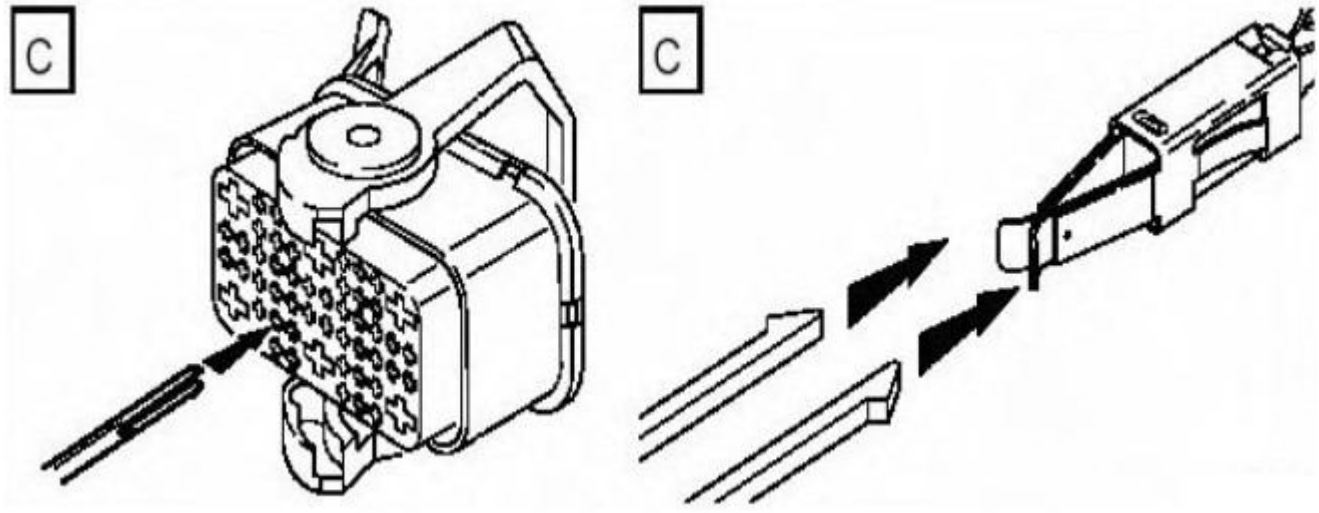


E130748

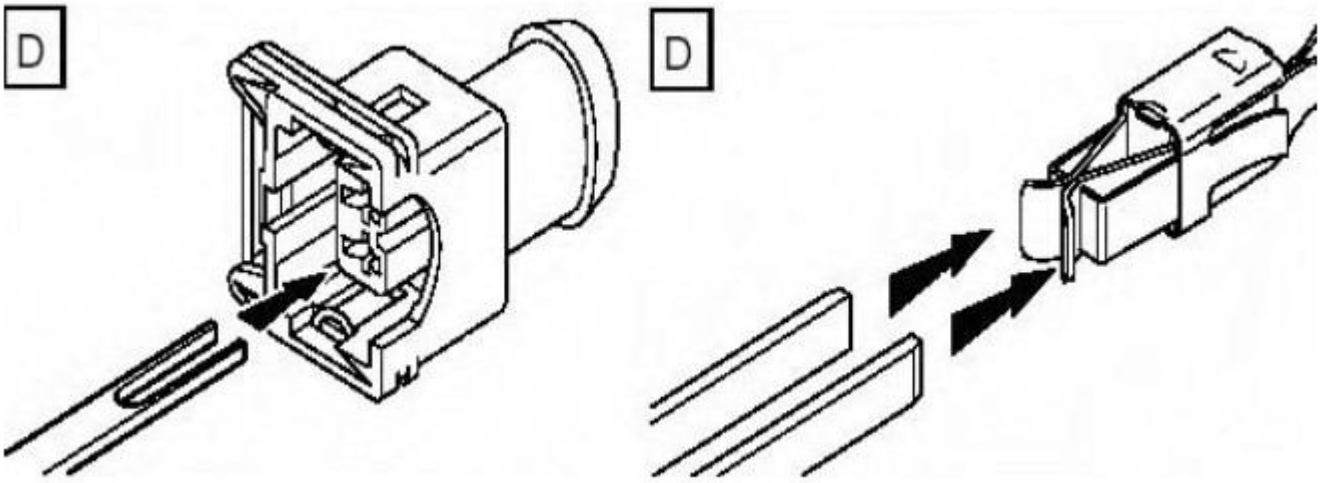


E130749

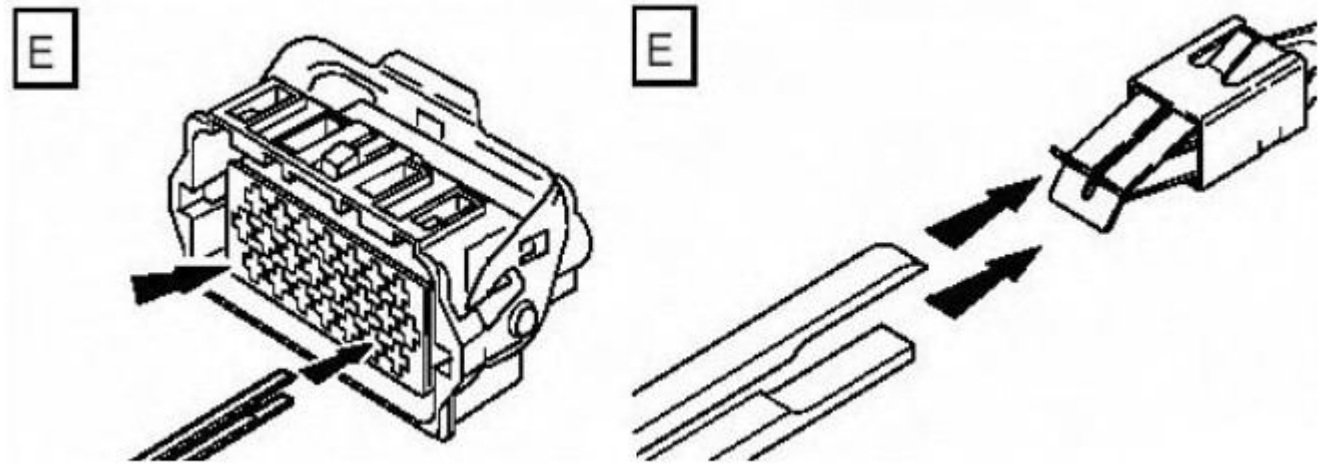


E130750

GETtheMANUALS.org

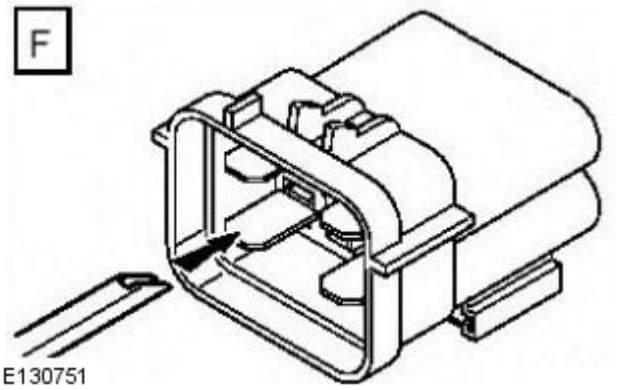


E130751

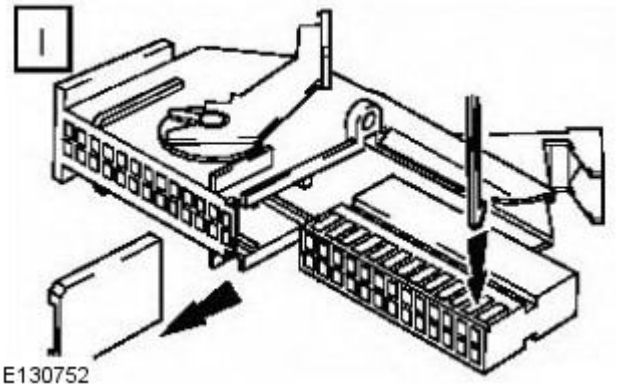


E130752

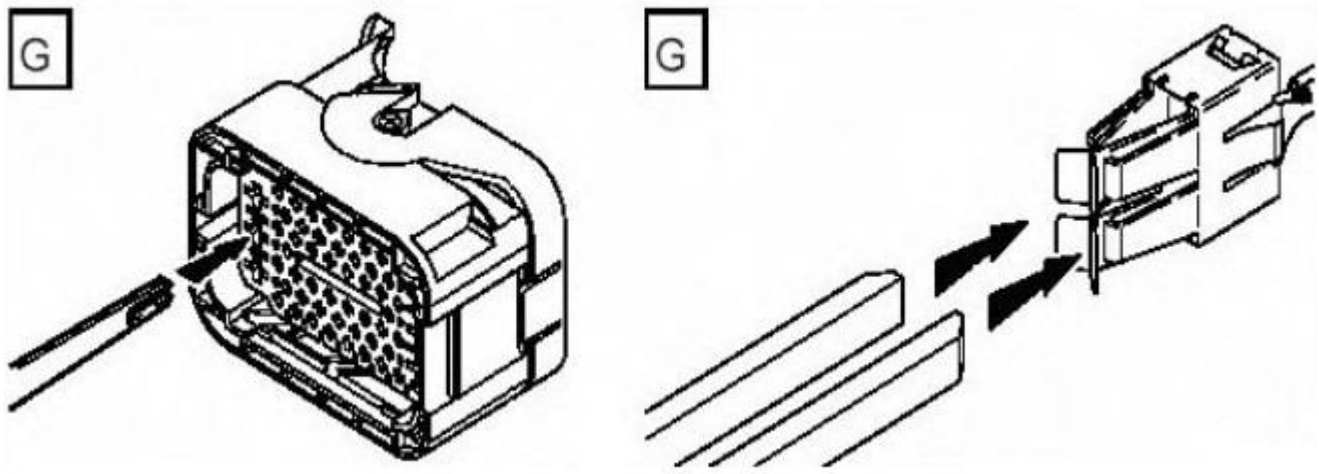


E130753

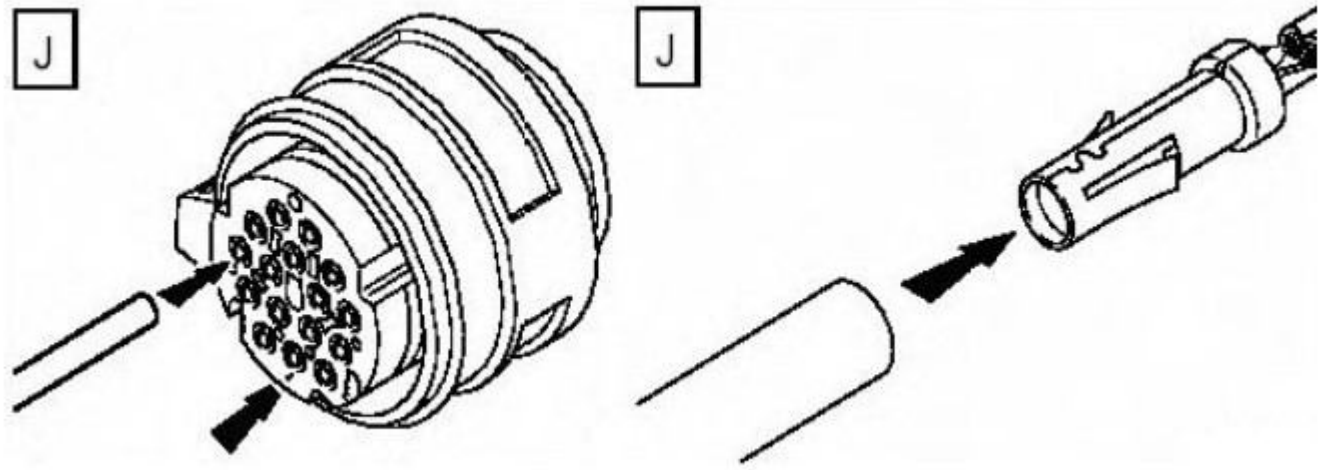


E130754

GETtheMANUALS.org

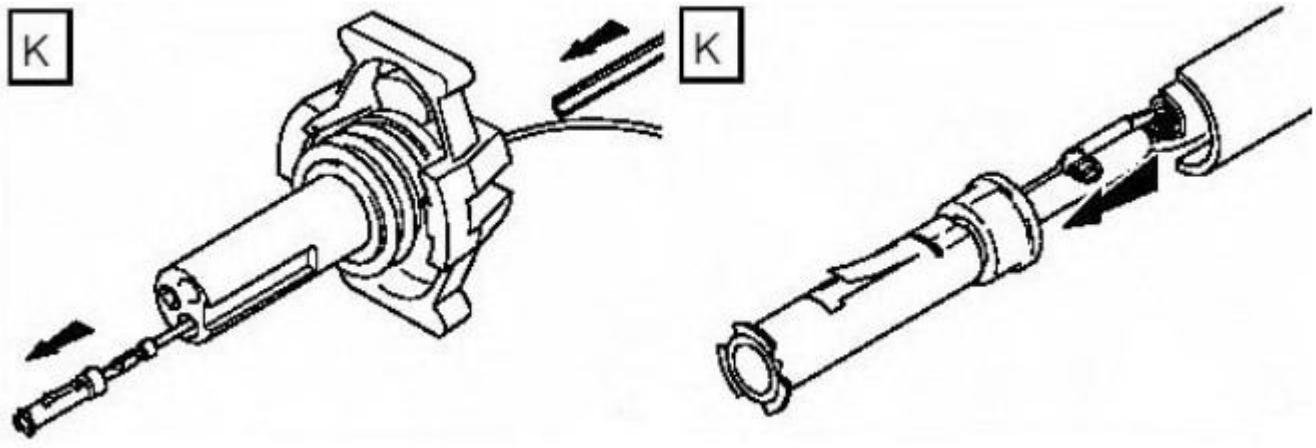


E130755

• NOTE: The chart shows the electrical connector types, terminal pins/sockets, extractor tip and anti-backout tip.

| Electrical connector terminal type | Pin or socket | Extractor tip | Anti-backout tip |
|---|---|---|---|
| Mulitlock 040 series | D | A | |
| Mulitlock 040 series | B | A | |
| Mulitlock 070 series | B | B | |
| Mulitlock 040 series | D | B | |
| Econoseal III 070 series | D | B | |
| Econoseal III 070 series | B | B | |
| Econoseal III 070 series | B | B | |
| Econoseal III J2 | D | B | |
| Econoseal III 250 series | B | F | |
| Econoseal III 250 series | D | B | |
| Econoseal III 250 series | B | F | |
| Econoseal III 250 series | D | B | |
| Micro-timer II 1.5mm | D | C | |
| Micro-timer II 1.5mm | B | C | |
| Std power timer 4.8 flat | D | G | |
| Std power timer 5.8 flat | B | D | |
| Std power timer 5.8 flat | B | D | |
| Std power timer 2.8 flat | D | D | |
| Std power timer 4.8 flat | D | G | |
| Std power timer 5.8 flat | B | D | |
| Ford 2.8 flat | D | E | H |
| Mulitlock 070 series | D | B | |
| Mulitlock 070 series | B | B | |
| Junior power timer 2.8 flat | D | D | |
| Sumitomo TS90 connector | B | B | H |
| Modu IV gold plated | D | B | |
| Mulitlock 040 series gold plated | D | A | |
| Micro qualock | D | I | |
| EECV | D | B | |
| EECV | D | B | |
| Kostal dia 1.50 series | D | J | |
| AMP 6.3 flat | D | B | |
| Junior power timer 2.8 flat | D | D | |
| 2.8 series | D | B | I |
| Sumitomo TS90 connector | D | B | H |
| Ducon 0.60 gold plated | D | K | |
| AMP 6.3 flat | D | D | |
| Econoseal III 250 series | B | F | |

## Repair Procedure

• CAUTIONS:

Do not use crimping pliers, insulation strippers, butt splice connectors, heat shrink sleeves or pre-terminated wiring harness(s) that are not supplied with the Jaguar wiring harness repair kit. Each part has been designed to be used only with the other parts in this wiring harness repair kit.

Where the repair procedure indicates that a glue lined heat shrink sleeve should be applied, apply sufficient heat to the glue lined heat shrink to melt the glue in order to provide a water tight seal. Do **not** over heat the glue lined heat shrink sleeve so that the wiring harness insulation becomes damaged.

It is not correct to make more than five repair joints on the wiring harness to any electrical connector and if more damage is found at the same electrical connector then a new wiring harness must be installed.

- Remove the faulty terminal from the electrical connector using the extractor tool and correct tip. Make sure that any anti-backout device is released before trying to remove the terminal.

GETtheMANUALS.org

- CAUTION: : A number of electrical connector terminals are gold plated or gold flashed. When defective, they must be installed with a gold pre-terminated wiring harness(s) from the wiring harness repair kit. It is not always easy to identify the female as gold but the male pins are visually easier, therefore always check both male and female terminals to identify those which are gold. Under no circumstances are gold and tin terminals to be mixed as this will lead to early failure of the electrical contact.

  • NOTE: Never use a harness lead with a smaller diameter than the original harness lead.

  Select the correct size and type of pre-terminated wiring harness and butt splice connector from the wiring harness repair kit.
- Using the wire cutter on the stripping tool, cut the pre-terminated wiring harness and the harness cable to the required length.
- • NOTE: See illustration: **Stripping Insulation**

  From the Relationship Table, find the correct length of insulation to be stripped from the pre-terminated wiring harness and set the adjustable cable length stop to the correct length. Place the pre-terminated wiring harness in the wire stripper and remove the insulation.
- Put the cable identification sleeve(s) on to the wiring harness with the main cable colour nearest to the terminal.
- During this next step do not overtighten. Place the selected butt splice connector in the crimping tool, matching the aperture and the butt connector colours. Make sure that the window indentation in the butt connector is resting over the guide bar on the lower jaw. Partially close the grip until the butt connector is securely held in the aperture. This will give support to the butt connector while the pre-terminated wiring harness is inserted into it.
- • NOTE: See illustration: **Spice Correctly Located**

  Insert the pre-terminated wiring harness into the butt connector and make sure that the wire is against the wire stop. Close the grip firmly, crimping the lead to the butt connector. When the handles have been completely closed the butt connector will be freed from the tool as the handles are released. If the handles have not been completely closed then the jaws will hold the butt connector and it cannot be removed from the tool until the crimp is fully made by closing the handles completely.
- Make sure that the harness cable has been squarely cut and the correct length of insulation removed. If more than one splice is needed the butt connectors must be not be crimped to the wiring harness at the same distance from the connector. The splices must be staggered to prevent a bulk of splices in the same area of the wiring harness.
- It is preferable to cover the butt splice joint with heat shrink sleeve. This is desirable not essential, except where the electrical connector is a sealed electrical connector. Use the smaller diameter sleeve for red and blue pre-terminated wiring harness(s) and the large diameter sleeve for the yellow pre-terminated wiring harness(s). It is advisable to place the heat shrink over the completed joint but in some instances the sleeve will not pass over the terminal. Check, and if required, place the correct size sleeve onto the harness cable or pre-terminated wiring harness before crimping the butt splice to the wiring harness.
- Place the harness cable into the butt splice with the splice window over the guide bar. Make sure that the cable harness wire is against the stop in the butt splice, crimp the butt splice connector to the wiring harness.
- Gently pull the harness cables each side of the butt splice to make sure that a secure joint has been made.
- WARNING: Do not use a naked flame in areas where fuel or oil have been spilt. Clean the area of residual oil and fuel and wait until the fuel spill has fully evaporated.

  • CAUTIONS:

  When using a heat source make sure that it is localised and causes no damage to surrounding materials.

  Where the repair procedure indicates that a glue lined heat shrink sleeve should be applied, apply sufficient heat to the glue lined heat shrink to melt the glue in order to provide a water tight seal. Do **not** over heat the glue lined heat shrink sleeve so that the wiring harness insulation becomes damaged.

  Using a suitable heat source, shrink the sleeve over the butt splice.
- If further pre-terminated wiring harness(s) are to be installed to the same electrical connector, make sure that the lead is cut at a different length to the previous joint. This makes sure that the splices will, where possible, be staggered on the wiring harness and prevent a bulk of splices in one area.
- When all of the splices have been made, fit the terminal(s) to the electrical connector, taking care that the terminals are correctly orientated.
- Install the wiring harness cover and secure with adhesive electrical tape. Do not cover the wiring harness right to the electrical connector as the terminals must have a little movement and not be firmly bound to the electrical connector or wiring harness. Make sure that the cable identification sleeve(s) are showing at the wiring harness electrical connector.

Stripping Insulation

GETtheMANUALS.org

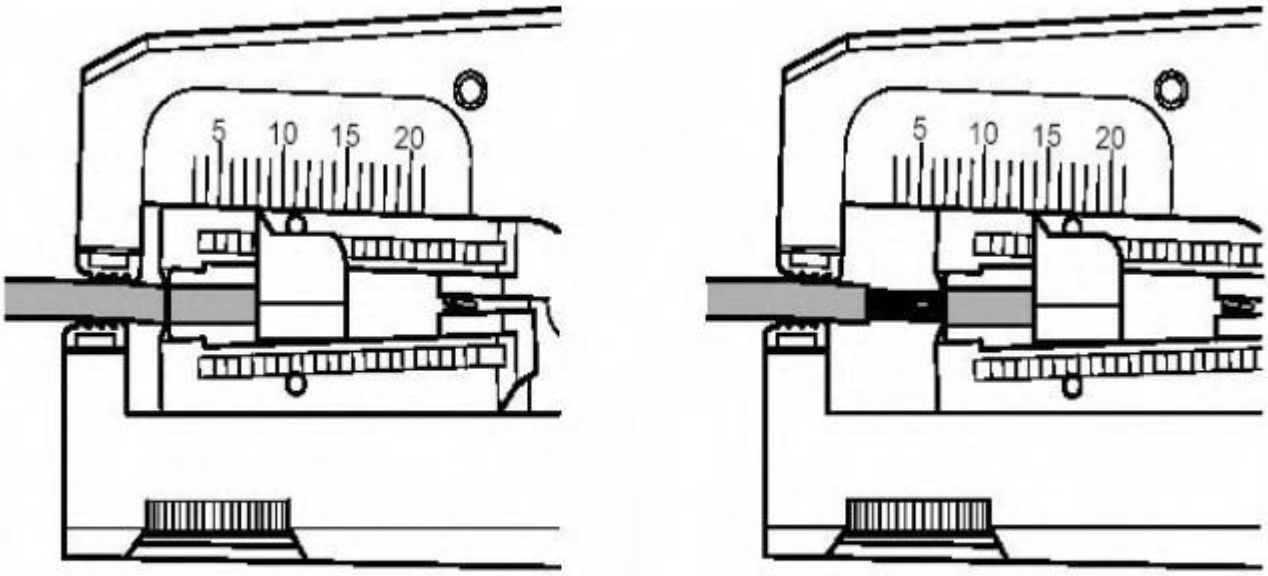


E130756

Spice Correctly Located

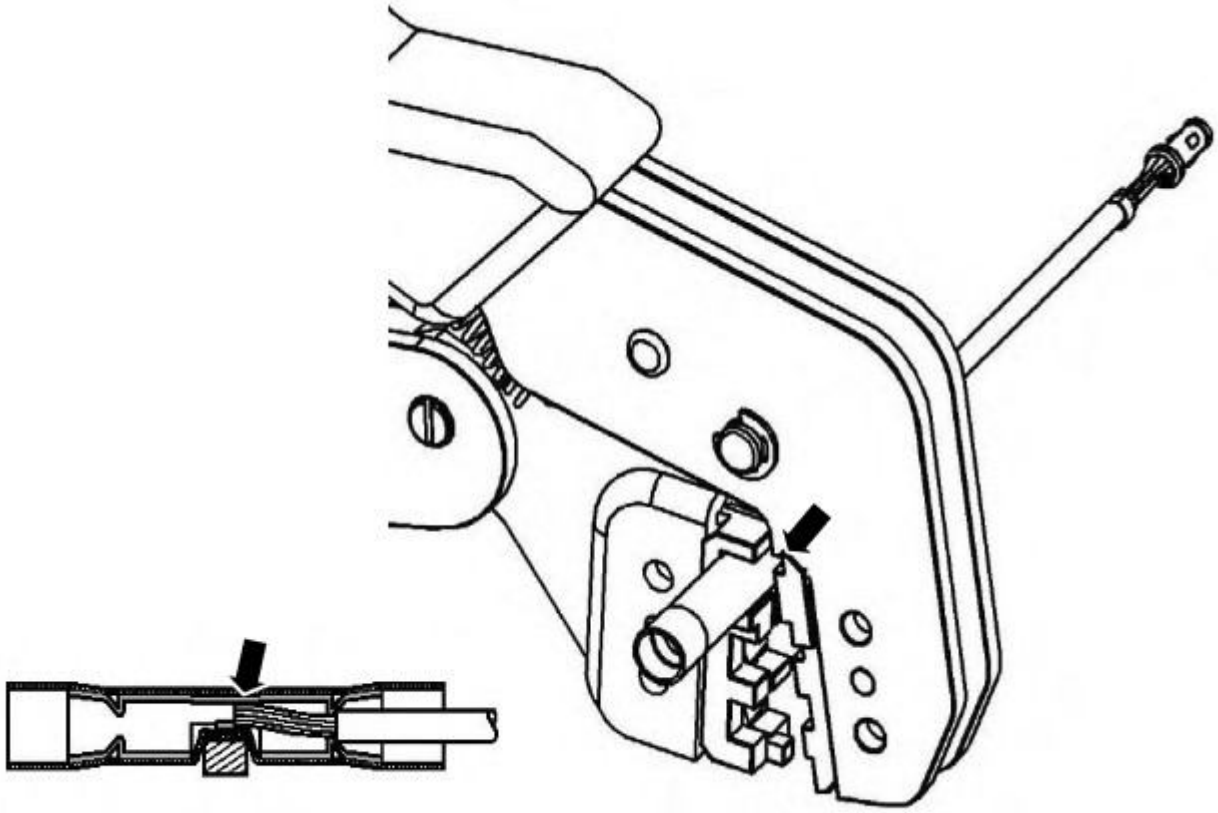

E130757

GETtheMANUALS.org

# Wiring Harnesses - Wiring Harness Repair

General Procedures

1. For additional information, refer to: Wiring Harness (418-02 Wiring Harnesses, Description and Operation).

GETtheMANUALS.org

# Anti-Theft - Active - Anti-Theft - Active

Description and Operation

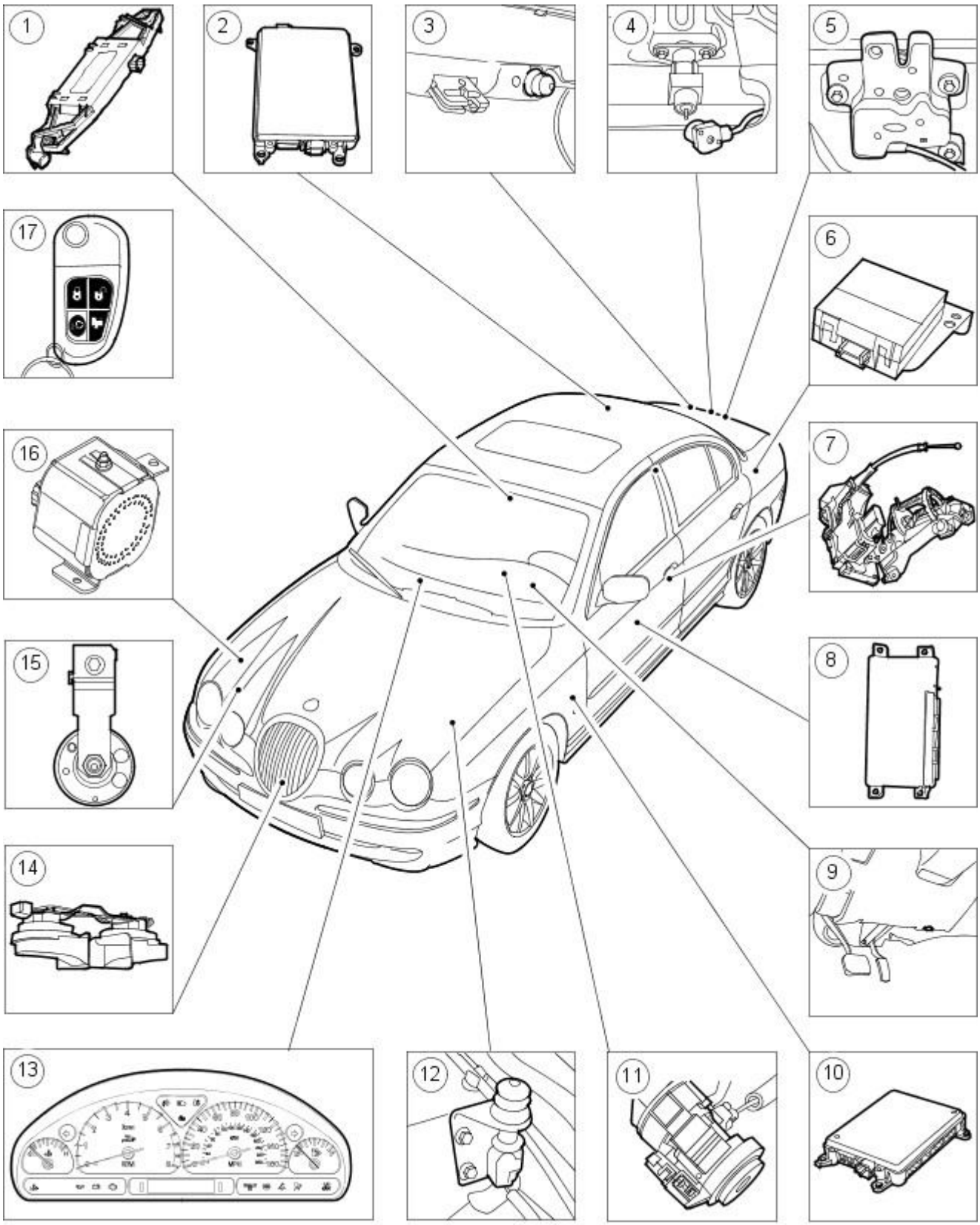


E30361

| Item | Part Number | Description |
|---|---|---|
| 1 | — | Ultrasonic sensor |
| 2 | — | Rear electronics module (REM) |
| 3 | — | Luggage compartment switch |
| 4 | — | Luggage compartment key-in sensor |
| 5 | — | Luggage compartment actuator |
| 6 | — | Inclination sensor (optional fit) |
| 7 | — | Door actuator |
| 8 | — | Driver door module (DDM) |
| 9 | — | Diagnostic connector |
| 10 | — | Front electronic module (FEM) |
| 11 | — | Transceiver module |
| 12 | — | Hood switch |
| 13 | — | Instrument cluster |
| 14 | — | Vehicle horn |

GETtheMANUALS.org

| | | |
|---|---|---|
| 15 | — | Anti theft alarm horn |
| 16 | — | Anti theft alarm horn (battery back-up) |
| 17 | - | Four button transmitter |

The anti-theft system provides protection from unauthorized entry into the vehicle. The security system functions are controlled by the front electronic module (FEM), driver door module (DDM), rear electronic module (REM), and the instrument cluster. When the alarm is triggered the system flashes the turn signal lamps, and sounds the alarm system horns, siren or a combination of both (Market dependant).

The base perimeter alarm consists of four doors, Hood and luggage compartment switches, radio sense, key sense, vehicle horn and separate anti theft alarm horn (Rest of world) or anti theft alarm horn (battery backed - UK, Holland, France, Belgium, Luxemburg, Israel, Ireland, Malta), visual feedback from direction indicators on arm, disarm, alarm and error, security LED located in the instrument panel. Higher levels of alarm can be added for specific market requirements- ultrasonic scanning sensors located in the overhead console, inclination sensor (Dealer fit option only) located in the luggage compartment, anti theft alarm horn (battery backed) located in engine compartment.

## Security System Arming

The system will be activated by the keyless entry remote transmitter when the following input sequence is followed:

1. **1.** Turn the ignition off and remove the key.
2. **2.** Close all the doors (unlocked).
3. **3.** Press the LOCK button on the transmitter to lock the doors. The turn signal lamps will flash once.
4. **4.** Press the LOCK button twice the vehicle will double lock (if enabled). The turn signal lamps will provide a longer flash.
5. **5.** If the turn signal lamps do not flash, the system is not activated. (If a door is open and a key is in the ignition, the remote lock function will be inhibited and the direction indicators will flash seven times).

The system will also be activated when the following input sequence is followed:

6. **6.** Turn the ignition off and remove the ignition key.
7. **7.** Close all the doors (unlocked).
8. **8.** Lock all the doors via the driver door key barrel with the ignition key, turn signal lamps will flash once. To double lock, activate the drivers door key barrel to the unlock then lock position within three seconds with the ignition key. The vehicle will double lock (if enabled). The turn signal lamps will provide a longer flash.
9. **9.** If the turn signal lamps do not flash, the system is not activated.
10. **10.** If the turn signal lamps flash five times either the door, hood or trunk are open.

Opening any of the doors or the hood will trigger the alarm after the alarm has been activated.

## Disarming an Untriggered Alarm System

The system can be disarmed by carrying out one of the following procedures.

- Unlock the driver door with a key (NA, ROW).
- Press the UNLOCK button on the keyless entry remote transmitter.
- If unlocked from the drivers door when the key barrel disarm is disabled (EURO), ignition switched to position II within 15 seconds from door being opened.

## Disarming a Triggered System

Carrying out either of the following steps will deactivate a triggered alarm system.

- Driver door is unlocked with the ignition key (NA, ROW only).
- Driver door is unlocked by pressing the UNLOCK button on the remote entry transmitter.
- The ignition key is cycled to ignition position II with a valid key.

Once the system has been triggered, the horns, siren or a combination of both (market dependant) and turn signal lamps will shut off automatically after 30 seconds (60 seconds NA). The system will then reset to an armed state and will trigger again if another trigger occurs.

## PANIC Alarm Activation (North America/Rest Of The World)

1. **1.** Press the Headlamp convenience button on the keyless entry remote transmitter three times within three seconds. The turn signal lamps flash and the horns, siren or a combination of both (market dependant) sounds for approximately 30 or 60 seconds (market dependant) or until:
    1. The ignition switch lock cylinder switched to position II with a valid key.

The panic feature is controlled by the driver door module (DDM) and is independent of the anti-theft system.

GETtheMANUALS.org

Published: 11-May-2011

# Anti-Theft - Active - Anti-Theft - Active

Diagnosis and Testing

The complexity of the electronics involved with the anti-theft, of which the front electronic module (FEM), driver door module (DDM), rear electronic module (REM), and the instrument cluster are a part, and the multiplexed communication network which are connected to it preclude the use of workshop general electrical test equipment. Therefore, reference should be made to the Jaguar approved diagnostic system, for detailed instructions on testing the anti-theft.

The Jaguar approved diagnostic system systematically tests and analyses all functions and the various systems affected by it.

Where a fault is indicated, some basic diagnostic methods may be necessary to confirm that connections are good and that wiring is not damaged before installing a new component.

GETtheMANUALS.org

# Anti-Theft - Active - Anti-Theft Alarm Horn

Removal and Installation

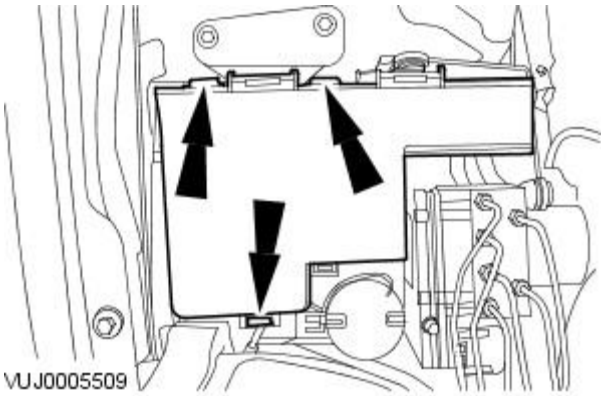


**1.** Detach the battery junction box (BJB).

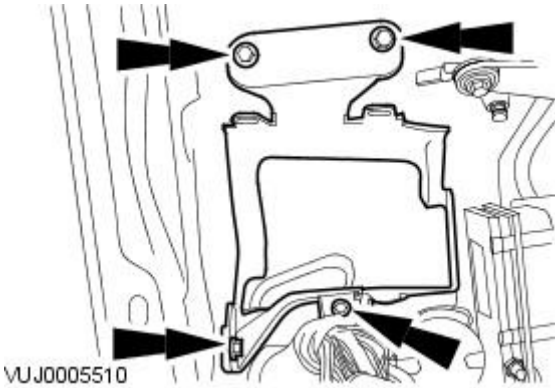


**2.** Remove the battery junction box retaining bracket.

**3.** Remove the fender splash shield.
For additional information, refer to Section 501-02 Front End Body Panels.

**4.** Detach the windshield washer reservoir.

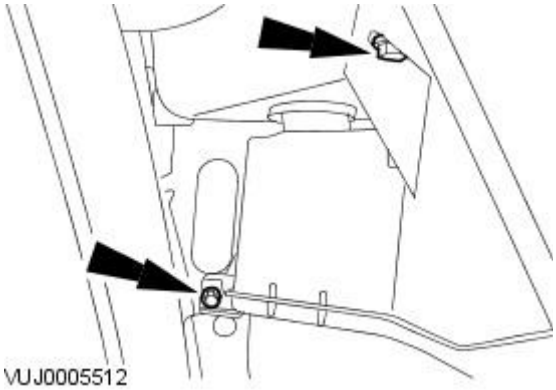


**5.** Remove the anti theft alarm horn retaining bolt.

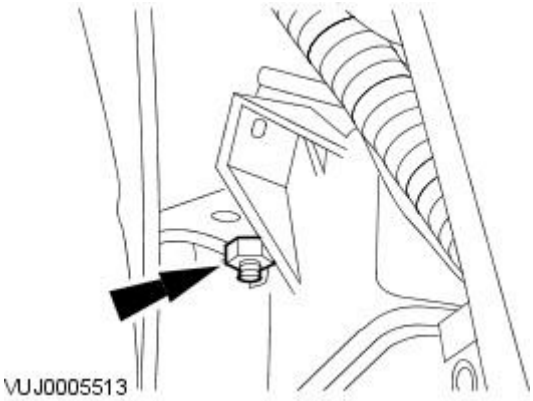


GETtheMANUALS.org

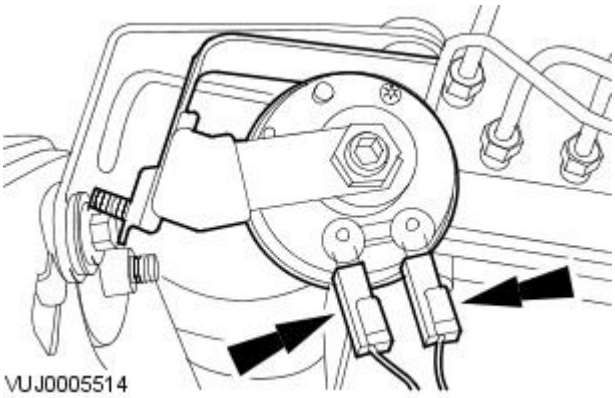


**6.** Remove the anti theft alarm horn.

- Disconnect the anti theft alarm horn electrical connectors.

## Installation

**1.** To install, reverse the removal procedure.

GETtheMANUALS.org

# Anti-Theft - Passive - Anti-Theft - Passive

Description and Operation

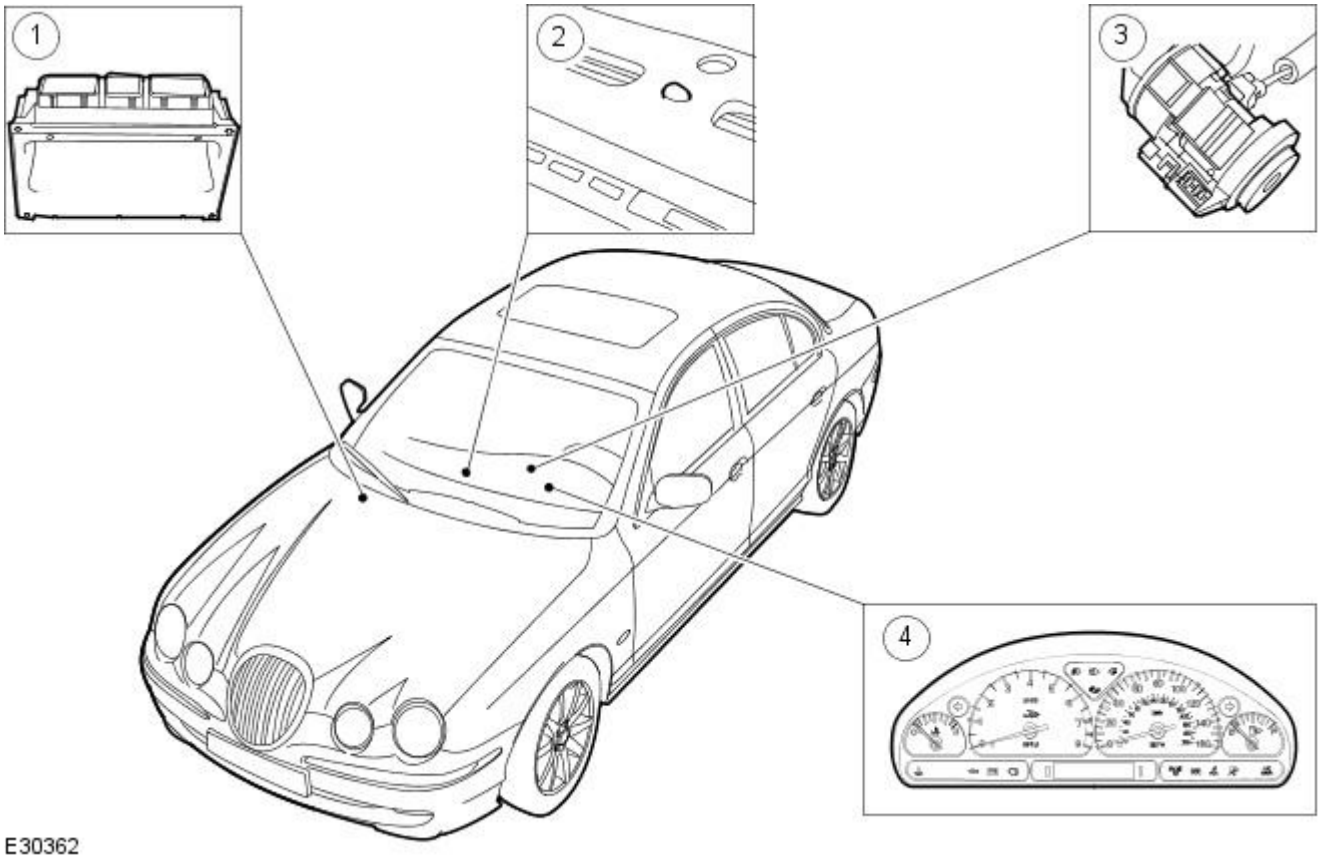


| Item | Part Number | Description |
|---|---|---|
| 1 | — | Engine control module (ECM) |
| 2 | — | Passive anti-theft system (PATS) LED |
| 3 | — | Passive anti-theft system (PATS) transceiver |
| 4 | — | Instrument cluster |

The passive anti-theft system (PATS) prevents the vehicle from being driven away by an unauthorized persons. The PATS system consists of encrypted electronically coded keys, a transceiver, instrument cluster (IC), and an engine control module (ECM). When the key is inserted into the ignition barrel, the ECM uses a decoding process via the transceiver to validate the key transponder code. If the code matches one that is stored and the key is then turned to the run position, the ECM will enable the fuel injectors, ignition coils, fuel pump drive and starter.

If the key is invalid the control function will send a theft status message to the ECM, which will disable, which will disable the vehicle from starting. If the correct key is used without a transponder or used with a transponder with an incorrect code, the vehicle will be inhibited from starting. This will prevent vehicle theft even if a duplicate key is cut.

If a valid key is read by the instrument cluster, the front electronic module (FEM) and the rear electronic module (REM) will allow the steering column lock actuator to unlock.

A PATS indicator LED (located on the instrument panel) provides the driver with the status of the PATS system. When the ignition is switched to the run position, the PATS indicator LED will illuminate for three seconds and extinguish. If there is a fault with the PATS system after 60 seconds of continuous flashing, the PATS indicator LED will flash an error code.

GETtheMANUALS.org

# Anti-Theft - Passive - Anti-Theft - Passive

Diagnosis and Testing

The best method to confirm the correct operation of PATS is to check the LED (located in the center of the instrument panel). The LED should illuminate solid for 3 seconds when the key is turned to the run position and then extinguish. This validates the PATS functions (the key transponder matches the key code stored, the challenge/response sequence between the instrument cluster (IC) and the engine control module (ECM) was successful resulting in the ECM being enabled).

The ECM will disable the fuel injectors, ignition coils, fuel pump drive and starter if any of the following conditions apply, a theft signal has been received from the IC (the key has not been authenticated), a challenge code has been transmitted to the IC but no response code has been received, a challenge code has been transmitted to the IC and an incorrect response received.

If any of the above cases apply, the ECM will log DTC P1260. This DTC is further defined by sub-codes. The sub-codes are accessed through mode 12 (freeze frame data). Additionally the IC will log DTC's if the failure was a result of the key read.

Engine fails to crank

If a PATS fault is detected, the LED will flash for 60 seconds at 4Hz with a 50% duty cycle. At the end of this period, the LED will flash a 2 digit code, this code is repeated 10 times. The meaning of this code along with the frequency of flashing is given in the accompanying table (as a general rule a fault code of 16 or less will cause the vehicle not to crank. Additionally, the Jaguar Approved Diagnostic System should be used to check the DTC stored in the IC.

The most regular occurrence for failing to crank is due to the park and neutral switches (gearshift not in park or neutral). The start circuit is as follows, low side of relay coil (Switched directly from the instrument cluster, if conditions correct), high side of relay of coil (from ignition start position through gearbox rotary start switches to relay).

Another likely cause maybe the CAN network is malfunctioning, (the CAN circuit is open/short). This means that the IC and ECM would be unable to communicate resulting in no challenge being performed to enable the ECM.

On US manual vehicles the addition of a clutch switch has been included in the starting circuit, this switch takes place of the park/neutral switch (auto transmission). The switch activates at end of travel (clutch fully depressed).

Engine cranks but will not start

If the engine is cranking it means that the ECM is enabled with respect to the PATS. If PATS was disabled the ECM would not engage the starter. This could be confirmed by verifying the PATS LED prove out (illuminated solid for 3 seconds) or by reading DTC's from the IC and ECM. In this case, the fuel pump circuit should be verified. A fuel pump module, which is controlled by the ECM supplies the fuel pump. In all cases of suspected PATS non-start issues, the most logical failure modes should be eliminated first. Check all relevant supplies and grounds to the IC and ECM, check that the starter relay has a permanent 12v supply, check that the relay has a 12v supply and ground across the coil whilst the ignition is in the crank position.

PATS Fault Codes

For the various PATS modes/faults listed in the table , the IC will store a DTC and indicate this to the customer during the detection peroid defined in the 'when logged' column, by illuminating the indicator as described for 60 seconds and then flashing the LED 10 times as appropriate. The indication will stop immediately the ignition is turned to off any time during the fault indication sequence. Up to 4 DTC's could be stored per key read (1-!0 read attempts). No DTC's will be stored until all retry attempts are complete. Only the highest priority fault code will be flashed.

The PATS LED will be commanded on as shown under 'indication'. Normal PATS operations are complete within 400ms of the ignition switch transition from off to run or start, worst case for ECM communication problems will be less than 2 seconds. If PATS is not complete during the 2 seconds the ECM will terminate PATS and await the next ignition run/start event. PATS faults will be indicated via the LED as soon as possible and will terminate the LED prove out. At key off all previous flashing will cease and the perimeter anti theft system will control the LED when the vehicle is locked and armed.

**PATS Fault code Table**

| Mode of Operation / Fault | When Logged | Ignition Switch Position | DTC | LED Fault Code | Indication |
|---|---|---|---|---|---|
| Prove out | N/A | Off to Run/Start | N/A | N/A | 3 Seconds of steady illumination |
| Perimeter Anti theft Control | N/A | Off | N/A | N/A | Off or 0.5Hz, 5% duty cycle until off |
| Transceiver not connected | Key Read | Run/Start | B1681 | 11 | 60 seconds off 4Hz flashing at 50% duty cyle followed by fault code flashing 10 times |
| Key problem. No code received from Key | Key Read | Run/Start | B1600 | 13 | 60 seconds off 4Hz flashing at 50% duty cyle followed by fault code flashing 10 times |
| Key/Transceiver problem, partial code received, checksum error | Key Read | Run/Start | B1602 | 14 | 60 seconds off 4Hz flashing at 50% duty cyle followed by fault code flashing 10 times |
| Key code not stored in memory(also due to having 8 key codes already stored in memory)/ signature mismatch | Ke Read/Diagnostic Test | Run/Start | B1601 | 15 | 60 seconds off 4Hz flashing at 50% duty cyle followed by fault code flashing 10 times |
| Problem with CAN link - ECM disabled. ECM system status CAN message missing | ECM CAN Comm's | Run/Start | U2511 U1900 | 16 | 60 seconds off 4Hz flashing at 50% duty cyle followed by fault code flashing 10 times |

Following part replacement the following codes maybe applicable, these are not normal customer mode fault codes.

| Mode of Operation / Fault | When Logged | Ignition Switch Position | DTC | LED Fault Code | Indication |
|---|---|---|---|---|---|
| Following new key programming Jaguar Approved Diagnostic System application, 2 keys have not been cycled in the ignition | B and A/Dealer | Run/Start | B1213 | 21 | 60 seconds of steady indication followed by fault code flashing 10 times |
| PATS reset application not performed after part IPK replacement | B and A/Dealer | Run/Start | B2141 | 22 | 60 seconds of steady indication followed by fault code flashing 10 times |
| PATS reset application not performed after part ECM replacement | Challenge/Response | Run/Start | U2510 | 23 | 60 seconds of steady indication followed by fault code flashing 10 times |

GETtheMANUALS.org

# Anti-Theft - Passive - Anti-Theft Security Access

General Procedures

1. The complexity of the electronics involved with the passive anti-theft system of which the security access is a part, and the multiplexed communication network which are connected to it preclude the use of workshop general electrical test equipment. Therefore, reference should be made to the Jaguar approved diagnostic system for detailed instructions on security access . The Jaguar approved diagnostic system systematically tests and analyses all functions and the various systems affected by it.

GETtheMANUALS.org

# Anti-Theft - Passive - Key Programming Using Diagnostic Equipment

General Procedures

1. The complexity of the electronics involved with the anti-theft, of which the key programming is a part, and the multiplexed communication network which are connected to it preclude the use of workshop general electrical test equipment. Therefore, reference should be made to the Jaguar Approved Diagnostic System for detailed instructions on key programming . The Jaguar approved diagnostic system systematically tests and analyses all functions and the various systems affected by it.

GETtheMANUALS.org

Published: 11-May-2011

# Anti-Theft - Passive - Key Programming Using Two Programmed Keys

General Procedures

1. To program additional PATS keys, a minimum of two valid keys must be available(if only one key is available, it will be erased and reprogrammed with the new key).
2. Key programming using two programmed keys.
    1. Insert the first valid key and turn to the run position for a maximum of five seconds, then turn to off and remove the key.
    2. Within ten seconds of removing the first key, insert the second valid key and turn to the run position for a maximum of five seconds, then turn to off and remove the key.
    3. To program the third (additional) key, insert the key and turn to the run position within twenty seconds of removing the second key, allow the PATS LED to prove out for three seconds to confirm storage of the additional key, then turn to off and remove the key.
    4. This method can be used to store up to a maximum of 8 ignition keys.

GETtheMANUALS.org

# Anti-Theft - Passive - Passive Anti-Theft System (PATS) Transceiver

Removal and Installation

## Removal

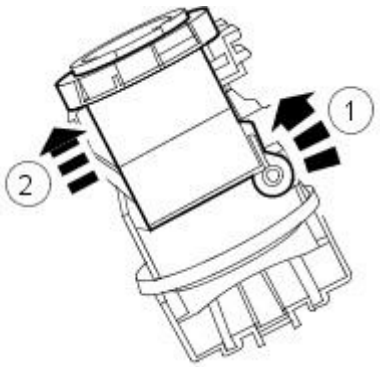


E30360

1. Remove the ignition switch lock cylinder.
   For additional information, refer to Section 211-04 Steering Column.
2. Remove the PATS transceiver.
   1. Detach the PATS transceiver retaining tang.
   2. Remove the PATS transceiver.

## Installation

1. To install, reverse the removal procedure.

GETtheMANUALS.org

# Telematics - Telematics

Description and Operation

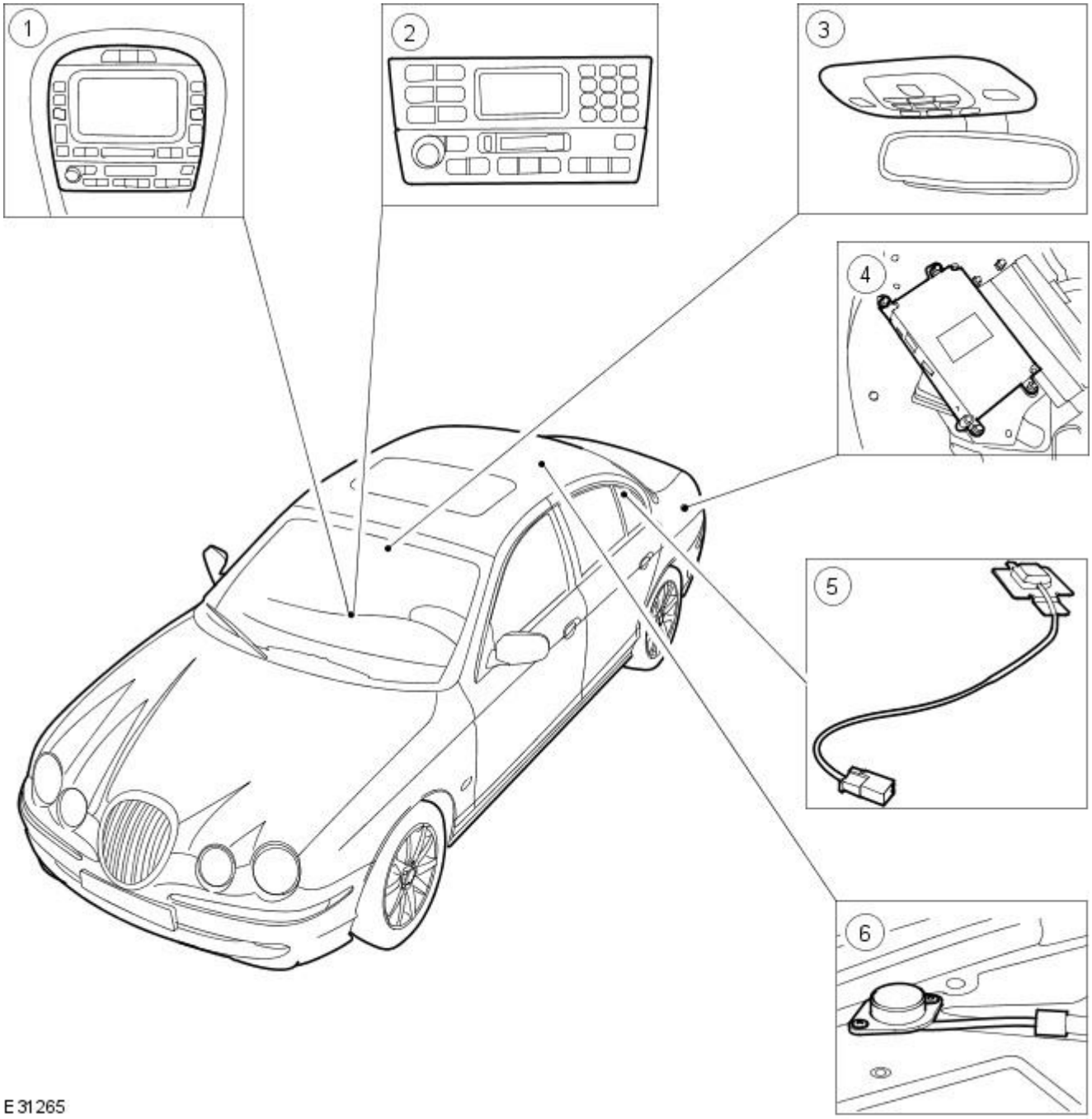


| Item | Part Number | Description |
|---|---|---|
| 1 | — | Navigation and VEMS (JaguarNet) display. |
| 2 | — | Base level audio display and VEMS (JaguarNet) display |
| 3 | — | Roof console |
| 4 | - | Module |
| 5 | - | Cellular phone antenna |
| 6 | - | Global positioning system (GPS) antenna |

System / Component Description

The vehicle emergency message system (Jaguar Assist) allows a user to request emergency assistance (police, ambulance, fire) or roadside assistance. Also, if any of the vehicle's airbags are deployed while JaguarNet is operational, the system automatically issues a call for emergency assistance.

1. **1.** The JaguarNet consists of four components:
    - VEMS module.
    - Navigation display/base level audio unit display.
    - Global Positioning antenna.
    - The cellular phone system.

The VEMS module controls the system. It is connected to the vehicle's cellular phone system, audio unit, restraint control module (RCM), navigation system and GPS antenna. The VEMS module uses the cellular phone system to place calls to the response center. JaguarNet mutes the audio unit upon placing a call and re-instates the audio when the call is ended. The RCM monitors the air bag circuit to determine if an airbag has deployed and provides the user with visual feedback during an activation by displaying status messages on the navigation display/base level audio display.

Additional buttons ( i ) and (SOS) are also provided in the roof console.

GETtheMANUALS.org

The GPS antenna receives data from a group of GPS satellites and is used by the VEMS module to determine the location of the vehicle when the system is activated.

Powering Up

The VEMS module powers up when the ignition switch is in the RUN position. During power up, the VEMS module will carry out a check of the system. The system check takes about 15 seconds. If a failure is detected, the VEMS module will illuminate tell-tail LED's in the roof console.

If the cellular phone is not detected, the VEMS module will display ASSIST FAILURE on the navigation display for five seconds, followed by CELLULAR PHONE REMOVED and ASSIST FEATURE DISABLED. Each of these messages will be displayed on the navigation display for five seconds.

Pressing i, SOS and Airbag Deployment

When info, emergency/roadside assistance is selected, or one of the air bags is deployed, JaguarNet will take control of the cellular phone and inform the user that an activation is in progress by displaying INFO REQUEST/SOS REQUEST on the navigation display/base level audio display. JaguarNet will also mute the audio unit causing PHONE to be displayed on the audio unit.

If JaguarNet determines that the cellular phone is not correctly connected, the navigation unit will display CELLULAR PHONE REMOVED followed by ASSIST FEATURE DISABLED then UNABLE TO PLACE CALL and INSTALL PHONE TO CONTINUE (US ONLY).

If a cellular phone is connected, but JaguarNet determines that the phone is not JaguarNet compatible, NON-ASSIST PHONE will be displayed on the navigation display (US ONLY).

Upon determining that the cellular phone is connected and communication with it can be established, JaguarNet checks to see if cellular service is available (a cellular signal is sensed by the vehicle's cellular phone).

If cellular service is not available, JaguarNet will continue to check for service for up to two minutes. During this time, NO CELLULAR SIGNAL followed by WAITING TO ACQUIRE are continually displayed in rotation on the navigation display. If service is still not available after two minutes, UNABLE TO PLACE CALL is displayed on the navigation display and the activation is terminated.

If service is available, JaguarNet places a data call to the response center and CALL IN PROGRESS is displayed on the navigation display.

If the call has difficulty going through because the cellular system is busy, JaguarNet will continue trying to place the call for up to one minute. During this time, CELLULAR SYSTEM BUSY followed by PLEASE WAIT are continuously displayed in rotation on the navigation display/base level audio unit display, and then the activation is terminated. If the data call goes through, RINGING RESPONSE CENTER is displayed on the navigation display

Once the data call is answered by the response center, JaguarNet sends an electronic data message. This message includes: the type of activation (emergency/roadside or air bag), a customer identification number (CID), the mostly recorded location (latitude and longitude), speed and direction of travel of the vehicle, the time at which the location and speed data was taken, and the systems cellular phone number. While this data is being transmitted the system updates the navigation display with SENDING LOCATION DATA (US ONLY).

After the data has been received by the response center, DATA RECEIVED will be displayed on the navigation display (US ONLY). The call will then be displayed on the navigation display. The call will then be forwarded to the response center operator switchboard.

If the data call fails to go through, JaguarNet will carry out a voice call redial to the response center operator switchboard. While this call is being placed, REDIAL IN PROGRESS will be displayed on the navigation display. While the system is waiting for an operator to answer, WAITING FOR OPERATOR will be displayed on the navigation display.

Upon answering the call, the operator will attempt to talk with the caller to determine the level of assistance required. The operator will contact the appropriate emergency service provider if required.

Throughout the rest of the call CID..., LAT..., and LON... data that was sent to the response center will be continually displayed in rotation on the navigation display.

If the call is initiated by the deployment of an airbag, the caller has no control of the phone and all communication with the response center operator will occur hands-free. If the call is initiated by pressing the navigation display i button, communication with the response center operator defaults to hands-free but may be switched to private mode (using the phone's internal speaker and microphone) by removing the phone from its holder.

When the call is ended, the navigation display will return to displaying vehicle information and the audio unit will return to its previous operating mode.

Powering Down

When the ignition switch is in the OFF position, JaguarNet will be powered off, so no status messages will be displayed. If the ignition is switched from RUN to OFF or ACC while the JaguarNet is in a call, the call will continue, but the navigation display will be switched off.

Initialization

After the unit is fitted the following procedure must be carried out to allow the system to operate :

- Make sure the transit relay has been removed.
- Turn the ignition switch to the 'ACC' or 'RUN' position.
- Make sure the cellular phone handset is powered 'ON'.
- Turn the ignition switch to the 'Off' position.
- Press the cellular phone handset power button. The cellular phone handset will power off and the 'i' and 'SOS' button LED's should illuminate after approximately thirty seconds.
- Wait for the 'i' and 'SOS' button LED's to extinguish, then turn the ignition switch to the 'ACC' or 'RUN' position.
- Make the call to the operator by pressing and holding the 'i' button for two seconds.

GETtheMANUALS.org

# Telematics - Telematics

Diagnosis and Testing

The complexity of the electronics involved with the JaguarNet system, of which the GPS antenna and navigation display are parts, and the multiplexed communication network which are connected to it preclude the use of workshop general electrical test equipment. Therefore, reference should be made to the approved Jaguar diagnostic system for detailed instructions on testing the VEMS unit.

The approved Jaguar diagnostic system tests and analyses all functions of the VEMS and the various systems affected by it.

Where a fault is indicated, some basic diagnostic methods may be necessary to confirm that connections are good and that wiring is not damaged before installing a new component.

GETtheMANUALS.org

# Telematics - Global Positioning System (GPS) Antenna

Removal and Installation

## Removal

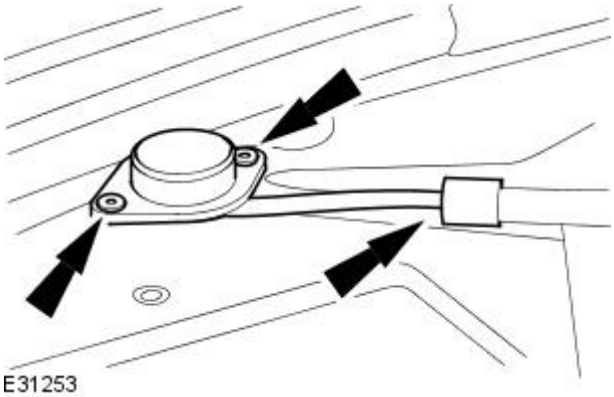


1. Remove the parcel shelf.
   For additional information, refer to Section 501-05 Interior Trim and Ornamentation.
2. Remove the GPS antenna.

## Installation

1. To install, reverse the removal procedure.

GETtheMANUALS.org

# Telematics - Module

Removal and Installation

## Removal

**1.** CAUTION: Electronic modules are sensitive to static electrical charges. If exposed to these charges, damage may result.

Disconnect the battery ground cable.
For additional information, refer to Section 414-01 Battery, Mounting and Cables.

**2.** Detach the luggage compartment side trim panel.

1. Remove the luggage compartment side trim panel retaining clip.
2. Detach the luggage compartment side trim panel.

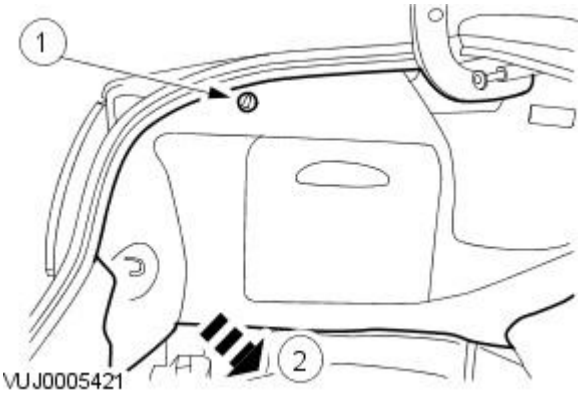


**3.** Disconnect the electrical connectors.

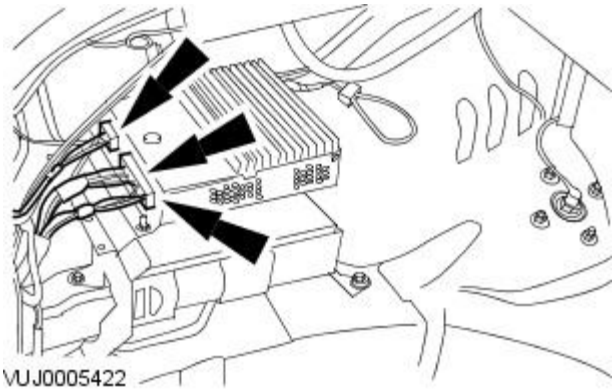


**4.** Detach the module mounting bracket.

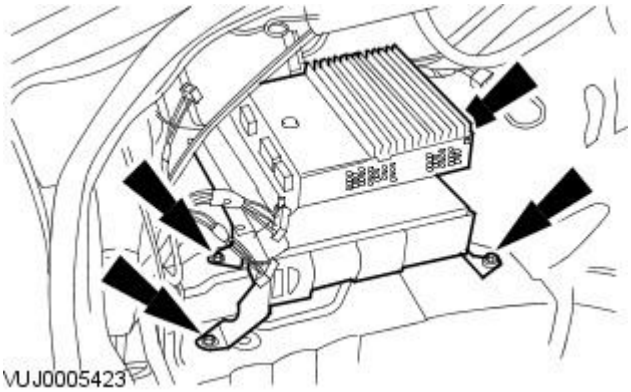


**5.** Remove the module mounting bracket.

- Disconnect the electrical connectors.

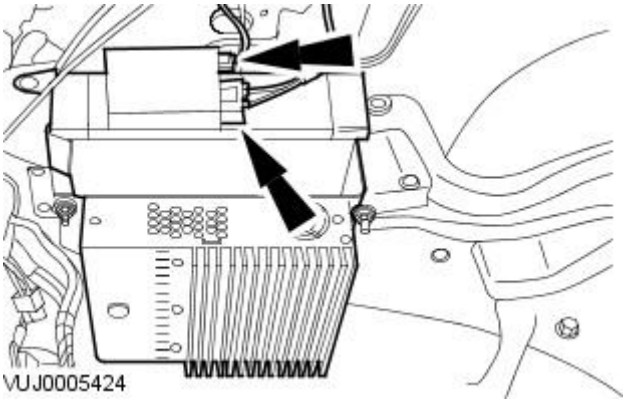


GETtheMANUALS.org

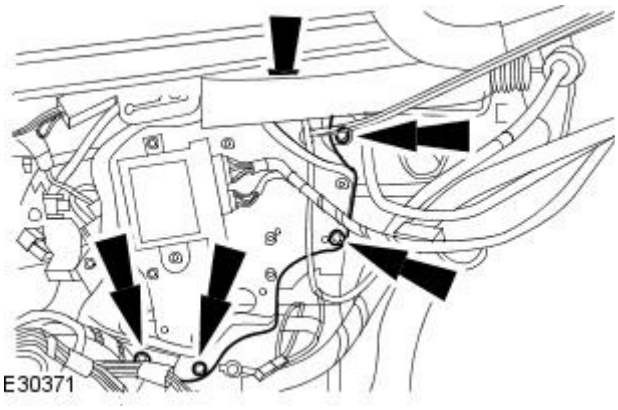


**6.** Detach the module mounting bracket.

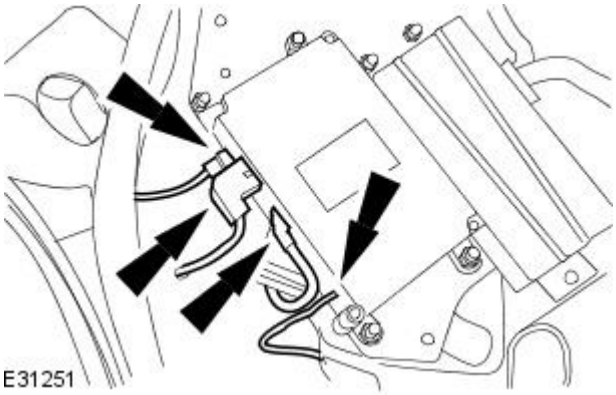


**7.** Disconnect the electrical and optic fibre connectors.

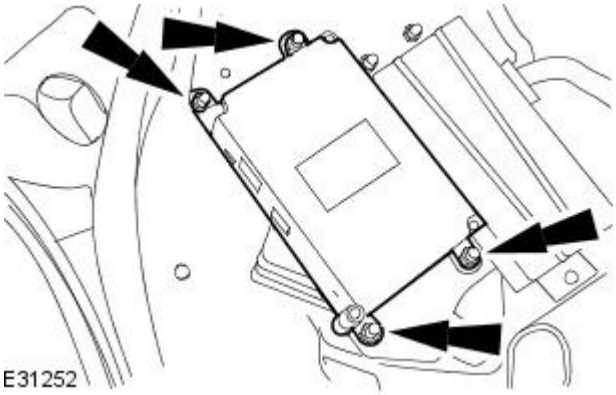


**8.** Remove the module.

## Installation

**1.** To install, reverse the removal procedure.

GETtheMANUALS.org

# Navigation System - Navigation System

Description and Operation

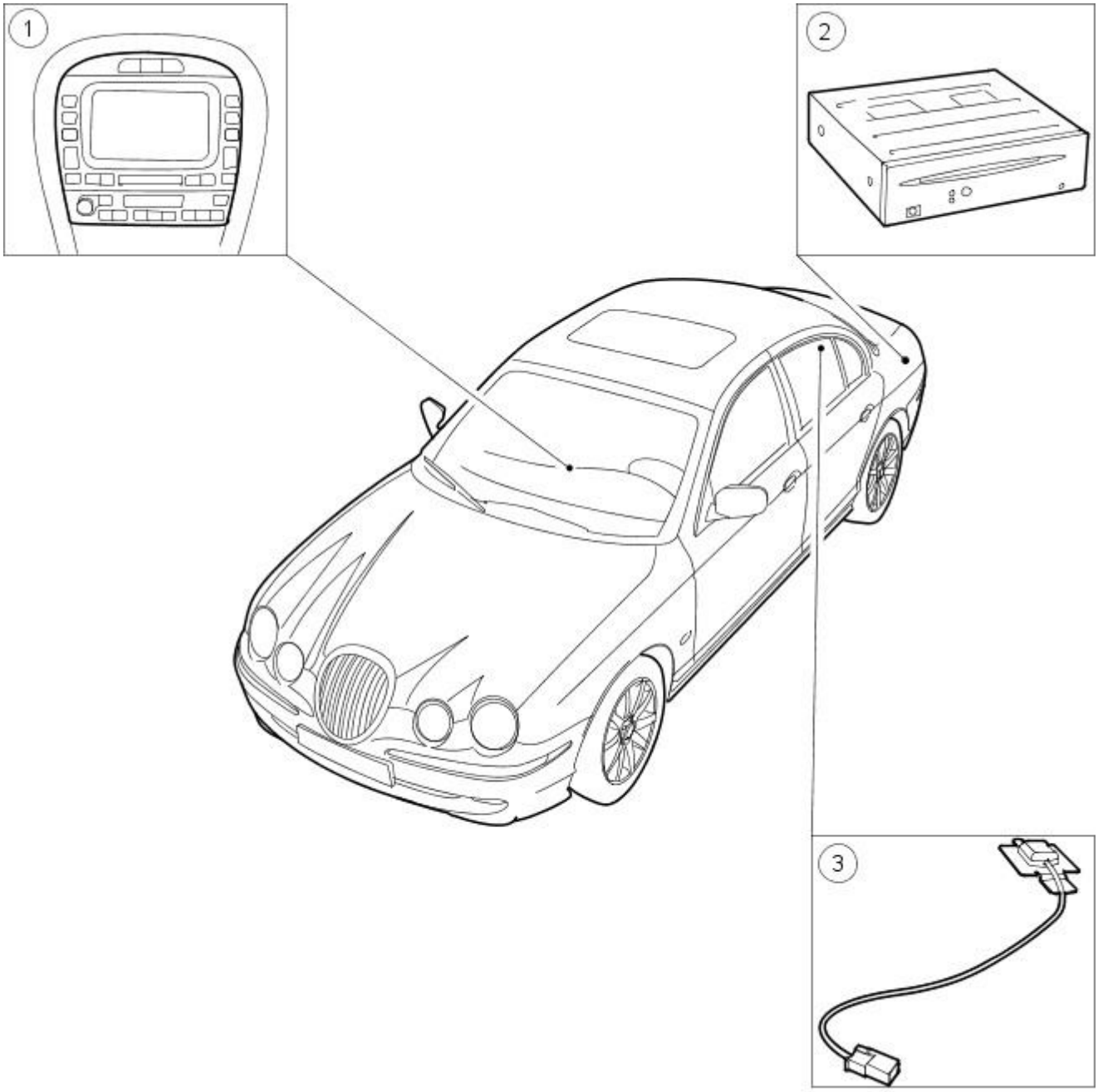


E31221

| Item | Part Number | Description |
|---|---|---|
| 1 | — | Navigation system display module |
| 2 | — | Navigation system module |
| 3 | — | Navigation system antenna |

The navigation system utilizes the following functions.

- Voice guidance volume controlled via audio head unit
- Screen brightness controlled via on screen menus
- Key illumination controlled via vehicle dimmer switch
- Any key turns system "ON"
- Language choice controlled via on screen menus

The navigation head unit comprises of a 7' full color screen which also provides control of the phone, audio system, climate control, vehicle emergency messaging system (VEMS), voice control, and TV. The navigation module is situated in the luggage compartment on the left-hand side and is covered by a protective trim panel. The Global Positioning System (GPS) antenna is located beneath the parcel shelf trim.

The system utilizes signals from the GPS antenna, the ABS unit and the GYRO sensors signals to enable the navigation module to calculate, with the aid of DVD map data, the position of the vehicle. After entering the required destination, the driver is guided along by both visual guidance and voice instructions. Even, if the driver strays off the route, the system calculates a new route showing the easiest way back to the original destination. On route, it can also point out useful landmarks such as, petrol stations, restaurants, hotels, Jaguar dealers, and car parks.

The system also provides system interfaces such as TV and VEMS.

Japanese market vehicles only have a navigation module with integrated voice recognition for control of the navigation system. The Japanese system also has the addition of VICS which provides real time traffic information.

GETtheMANUALS.org

# Navigation System - Navigation System

Diagnosis and Testing

## Principle of Operation

For a detailed description of the navigation system, refer to the relevant Description and Operation sections in the workshop manual. REFER to: Navigation System (419-07, Description and Operation).

## Inspection and Verification

1. **1.** Verify the customer concern.
2. **2.** Visually inspect for obvious signs of mechanical or electrical damage.

**Visual Inspection Chart**

| Mechanical | Electrical |
|---|---|
| • Navigation system DVD player Mechanism | • Navigation system display<br>• Navigation system module<br>• GPS antenna<br>• Wiring harness for damage and corrosion<br>• Electrical connector(s)<br>• ABS Module<br>• Audio unit |

3. **3.** If an obvious cause for an observed or reported concern is found, correct the cause (if possible) before proceeding to the next step.
4. **4.** If the cause is not visually evident, check for Diagnostic Trouble Codes (DTCs) and refer to the DTC Index.

## DTC Index

CAUTION: When probing connectors to take measurements in the course of pin point tests, use the adapter kit, part number 3548-1358-00

• NOTE: If the control module/component is suspect and the vehicle remains under manufacturer warranty, refer to the warranty policy and procedures manual (section B1.2), or determine if any prior approval program is in operation, prior to the installation of a new component.

• NOTE: When performing voltage or resistance tests, always use a digital multimeter (DMM) accurate to three decimal places and with a current calibration certificate. When testing resistance, always take the resistance of the DMM leads into account.

• NOTE: Check and rectify basic faults before beginning diagnostic routines that involve pinpoint tests.

• NOTE: Inspect connectors for signs of water ingress, and pins for damage and/or corrosion.

• NOTE: If DTCs are recorded and, after performing the pinpoint tests, a fault is not present, an intermittent concern may be the cause. Always check for loose connections and corroded terminals.

| DTC | Description | Possible Cause | Action |
|---|---|---|---|
| B1342 | ECU is defective | • Satellite navigation system module - internal ECU failure | Carry out any pinpoint tests associated with this DTC using the manufacturer approved diagnostic system. check navigation system module for internal failure. Install a new module as required, refer to the new module installation not at the top of the DTC index. |
| B2197 | TV module error | • Satellite navigation system display - module or switch fault | Carry out any pinpoint tests associated with this DTC using the manufacturers approved diagnostic equipment. Check the satellite navigation system module for failure. Install a new module as required, refer to the new module installation note at the top of the DTC index. |
| B2198 | Traffic Master module error | • Satellite navigation system module - traffic master module fault | Refer to electrical circuit diagrams, notes and check navigation system module communication circuit to traffic master module for failure. install a new module as required, refer to the new module installation note at the top of the DTC index. |
| B2199 | VICS Module Error | • Satellite navigation system module - VICS (vehicle information control system) module fault | Refer to electrical circuit diagrams, notes and check navigation system module communication circuit to vehicle information control system module for faults. install a new module as required, refer to the new module installation note at the top of the DTC index. |
| B2201 | No communication with traffic master module | • Satellite navigation system module - traffic master communication fault. This DTC is logged if the module is not fitted. It must be masked out by the tester when the module is not fitted to a particular vehicle | Refer to electrical circuit diagrams, notes and check navigation system module communication circuit to traffic master module for a fault. Install a new module as required, refer to the new module installation note at the top of the DTC index. |
| B2202 | No communication to VICS module | • Satellite navigation system module to vehicle information control module - communication fault. This DTC is logged if the module is not fitted. It must be masked out when it is not fitted to a particular vehicle. | Refer to electrical diagrams, nots and check navigation system module communications circuit to vehicle information control module for faults. |
| B2204 | GPS Antenna connection open or short | • Satellite navigation module (GPS) Antenna - open circuit or short circuit | Carry out any pinpoint tests associated with this DTC using the manufacturer approved diagnostic system. refer to electrical circuit diagrams, notes and check navigation system module (GPS) antenna for open or short circuit. |

GETtheMANUALS.org

| DTC | Description | Possible Cause | Action |
|---|---|---|---|
| B2205 | GPS receiver fault | • Satellite navigation system module - global positioning satellite receiver fault | Carry out any pinpoint tests associated with this DTC using the manufacturer approved diagnostic system. Refer to the electrical circuit diagrams, notes and check navigation system module global positioning satellite (GPS) antenna circuit. Check the antenna is not obstructed (vehicle must be outside when being tested). Replace module is fault persists. |
| B2206 | Gyroscope fault | • Satellite navigation system module - gyroscope fault | Carry out any pinpoint tests associated with this DTC using the manufacturer approved diagnostic system. Refer to electrical circuit diagrams, nots and check navigation system module for faults. Install a new module as required, refer to the new module/component installation note at the top of the DTC index. |
| B2207 | Internal ECU ROM checksum fault | • Satellite navigation system - module internal failure | Refer to electrical circuit diagrams, notes and check the navigation system module for faults. Install a new module as required, refer to the new module/component installation note at them top of the DTC index. |
| B2208 | Navigation module to display and switch module communication error | • Satellite navigation system module - communication to display and switch module fault. | Refer to electrical circuit diagrams, notes and check navigation system display and switch module communication circuit for fault |
| B2646 | Antenna circuit open circuit #1 | • Satellite navigation system module navigation system antenna - open circuit | refer to electrical diagrams, notes and check navigation systems antenna circuit for open circuit. To restore power the fault must be removed and the user must key off and on. |
| B2647 | Antenna circuit open circuit #2 | • Satellite navigation system module navigation system antenna - open circuit | Refer to electrical diagrams, notes and check navigation systems antenna circuit for open circuit. To restore power the fault must be removed and the user must key off and on. |
| B2648 | Antenna circuit open circuit #3 | • Satellite navigation system module navigation system antenna - open circuit | Refer to electrical diagrams, notes and check navigation systems antenna circuit for open circuit. To restore power the fault must be removed and the user must key off and on. |
| B2649 | Antenna circuit open circuit #4 | • Satellite navigation system module navigation system antenna - open circuit | Refer to electrical diagrams, notes and check navigation systems antenna circuit for open circuit. To restore power the fault must be removed and the user must key off and on. |
| B2650 | Antenna circuit short circuit #1 | • Satellite navigation system module navigation system antenna - short to power or ground | Refer to electrical diagrams, notes and check navigation systems antenna circuit for short to power or ground. To restore power the fault must be removed and the user must key off and on. |
| B2651 | Antenna circuit short circuit #2 | • Satellite navigation system module navigation system antenna - short to power or ground | Refer to electrical diagrams, notes and check navigation systems antenna circuit for short to power or ground. To restore power the fault must be removed and the user must key off and on. |
| B2652 | Antenna circuit short circuit #3 | • Satellite navigation system module navigation system antenna - short to power or ground | Refer to electrical diagrams, notes and check navigation systems antenna circuit for short to power or ground. To restore power the fault must be removed and the user must key off and on. |
| B2653 | Antenna circuit short circuit #4 | • Satellite navigation system module navigation system antenna - short to power or ground | Refer to electrical diagrams, notes and check navigation systems antenna circuit for short to power or ground. To restore power the fault must be removed and the user must key off and on. |
| B2655 | Switch and display module is defective | • Satellite navigation system module - display faulty | Refer to electrical circuit diagrams, notes and check navigation system display and switch module for failure. Install a new display module as required. Refer to the new module/component installation note at the top of the DTC index |
| B2656 | DVD (Digital Versatile Disk) error | • Satellite navigation system module -DVD error (DVD is integral to the navigation system module ECU) | Refer to electrical circuit diagrams, notes and check navigation system module for faults. Install a new module as required. Refer to the new module/component installation note at the top of the DTC index |

GETtheMANUALS.org

# Navigation System - Navigation System Antenna

Removal and Installation

## Removal

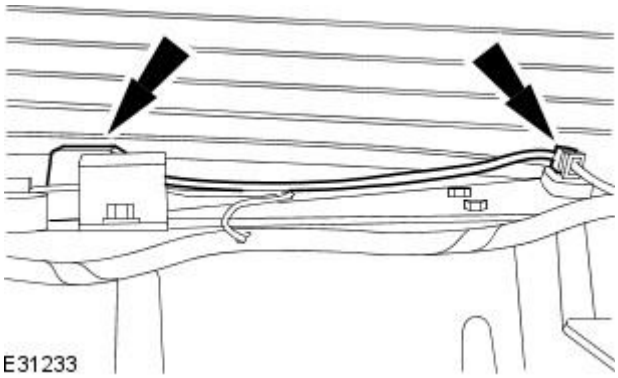


1. Remove the parcel shelf.
   For additional information, refer to Section 501-05 Interior Trim and Ornamentation.
2. Remove the navigation system antenna.

## Installation

1. To install, reverse the removal procedure.

GETtheMANUALS.org

# Navigation System - Navigation System Display Module

Removal and Installation

## Removal

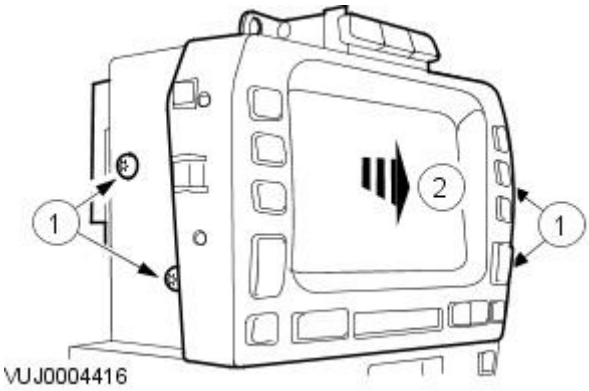


1. Remove the instrument panel console.
   For additional information, refer to Section 501-12 Instrument Panel and Console.
2. Remove the navigation system display module.
   1. Remove the navigation system display module retaining bolts.
   2. Remove the navigation system display module.

## Installation

1. To install, reverse the removal procedure.

GETtheMANUALS.org

# Navigation System - Navigation System Module

Removal and Installation

## Removal

**1.** NOTE: Make sure the navigation CD has been removed before disconnecting the battery ground cable.

Disconnect the battery ground cable.
For additional information, refer to Section 414-01 Battery, Mounting and Cables.

**2.** Detach the luggage compartment side trim panel.

1. Remove the luggage compartment side trim panel retaining clip.
2. Detach the luggage compartment side trim panel.

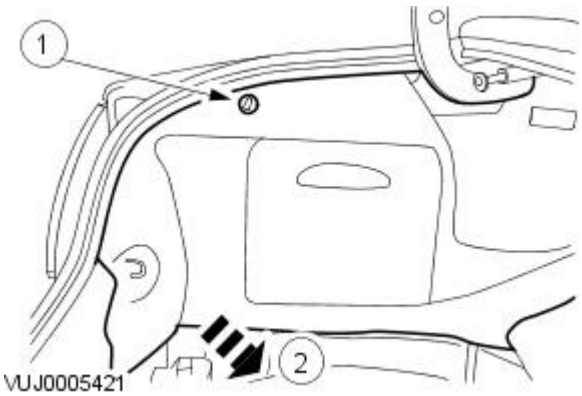


**3.** Detach the module retaining bracket.

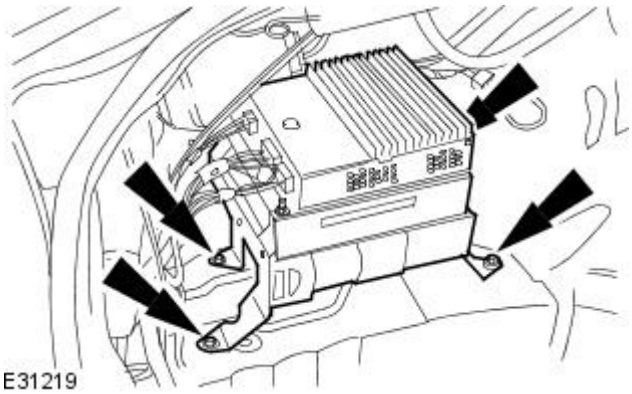


**4.** Disconnect the navigation system module electrical connectors and fibre optic connector.

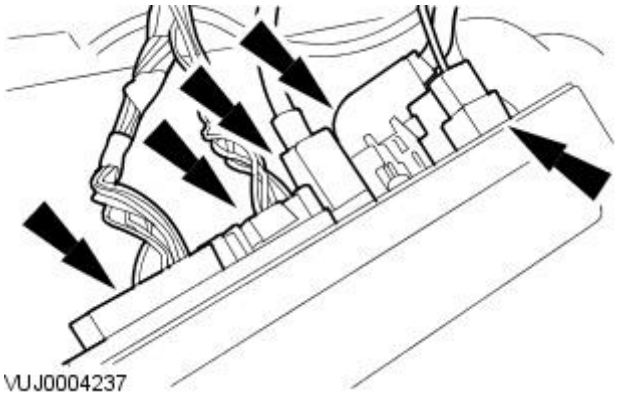


**5.** Remove the navigation system module.

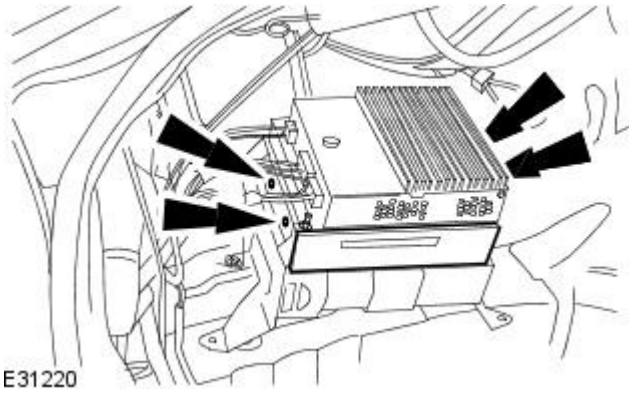


## Installation

GETtheMANUALS.org

**1.** To install, reverse the removal procedure.

# Cellular Phone - Cellular PhoneVIN Range: M45255->N52047

Description and Operation

The portable cellular phone system consists of:

- Cellular phone handset (GSM).
- Cradle (GSM).
- Cellular portable (US Only).
- Handset battery (US Only).
- Hang up cup (US Only).
- Roof console mounted microphone.
- Steering wheel switch controls.
- Portable support electronics (PSE) module (US Only).
- Transceiver (GSM).
- In-bumper cellular phone antenna.
- Antenna cable.
- Audio unit controls.

The cellular phone handset is located within the center console armrest. The audio control unit and the steering wheel controls are utilized to operate the system.

The vehicle utilizes two unique cellular phones systems:

- GSM
- US CDMA/TDMA digital and AMPS analogue systems

The voice activation control module provides the handsfree operation for cellular phone.

To activate the handsfree function:

1. **1.** Switch the ignition to the RUN position. After 4-6 seconds the system will be initialized and "VOICE READY" will be displayed in the message center.
2. **2.** Operate the VOICE/PHONE switch on the steering wheel.
3. **3.** Clearly state the command when "LISTENING" is displayed in the message center.
4. **4.** Operate the VOICE/PHONE switch on the steering wheel or remain silent for 1 second. If speech is detected "PROCESSING" will be displayed in the message center. Operating the VOICE/PHONE switch again will cancel the voice session.

Refer to the Cellular Phone user guide for complete operating instructions.

For additional information on the voice activation control module, refer to Section 419-10 Multifunction Electronic Modules .

GETtheMANUALS.org

# Cellular Phone - Cellular PhoneVIN Range: N52048->N99999

Description and Operation

Component Location

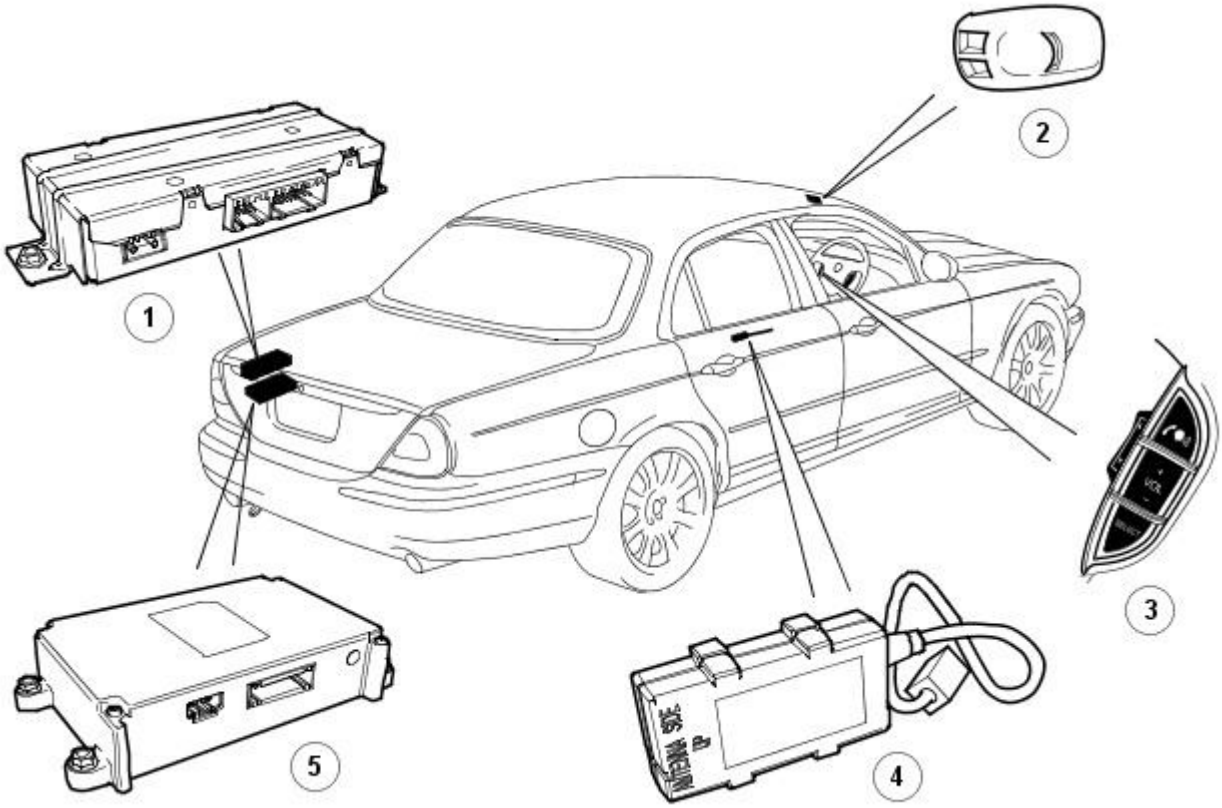


| Item | Description |
|---|---|
| 1 | Voice activated control module |
| 2 | Microphone |
| 3 | Steering wheel telematics control switches |
| 4 | Bluetooth upgrade module |
| 5 | Portable Support Electronics (PSE) |

## Bluetooth

2006 model year (MY) sees the introduction of a Bluetooth® communications network system.

Note: In common with previous cellular phones it is the drivers responsibility to comply with local legislation regarding cellular phone use.

Bluetooth is a way of communicating with various electronic devices that are equipped with specialized chips using a short-range radio link. It allows most devices to communicate with one another by creating a universal language. The devices then form a private network known as a 'personal area network'.

Interaction between Bluetooth devices can take place without direct human intervention whenever two or more Bluetooth devices are within each other's range. This enables the Bluetooth transceiver chip to trigger an automatic connection to deliver and accept a flow of data.

Bluetooth devices operate on a radio frequency band knows as the Industrial, Scientific, and Medical frequency. The Industrial, Scientific, and Medical radio frequency band is 2.40 GigaHertz (GHz) to 2.48 GHz which is divided into 79 channels, each carrying a bandwidth of 1 MegaHertz (MHz).

The devices use the 79 individual randomly chosen channels within the frequency band, changing from one to another on a regular basis. The Bluetooth transmitters change frequencies approximately 1,600 times every second, meaning that more devices can utilize the limited slice of the radio frequency.

Since every Bluetooth transmitter uses this technique automatically, it's most unlikely that two transmitters will be on the same frequency at the same time. This technique minimizes the risk of disruption to Bluetooth devices, as any interference on a particular frequency will last only a fraction of a second.

The Bluetooth system consists of:

- A Bluetooth upgrade module
- A Portable Support Electronics (PSE) module
- A voice activated control module
- A microphone
- Steering wheel telematics control switches
- An audio unit

The Bluetooth upgrade module allows the driver to integrate their personal cellular phone to the vehicle. When a cellular phone is paired to the vehicle, it allows the storage of up to 500 individual phone numbers and 40 related voice tags to the voice activated control module. These stored phone numbers can then be accessed using the audio unit control buttons, the audio unit touch screen (if equipped) or steering wheel telematics control switches. The voice tags can be accessed by using the steering wheel telematics control switches when utilizing the voice activation facility.

GETtheMANUALS.org

If a cellular phone has been matched/programmed to the vehicle and a second cellular phone is added, the stored phone numbers and voice tags from the second cellular phone will overwrite the original phones' stored data.

Phone numbers stored to the PSE and voice tags stored to the voice activated control module need to be manually updated should alterations be required. If a new phone number has been added to the cellular phone memory, it will need to be added manually to the vehicle memory.

Once stored to the vehicle, the phone numbers can be viewed on the audio unit screen. The audio unit and touch-screen operate as previous models.

For vehicles fitted with a touch-screen controlled audio unit it is possible to redial the last 10 dialed phone numbers from the vehicle. For vehicles without a touch-screen controlled audio unit it is only possible to redial the last dialed phone number from the vehicle. These dialed phone numbers are stored in the PSE module memory and not from the cellular phone's memory.

The Bluetooth system does not include a phone cradle or it's own individual vehicle antenna. As a consequence of this, there is no cellular phone signal amplification and no in-car charging facilities.

In-car charging can be achieved using a suitable lead to the cigar lighter or auxiliary power socket.

## Portable Support Electronics (PSE) Module

The Portable Support Electronics (PSE) module is located in the left-hand side of the luggage compartment.

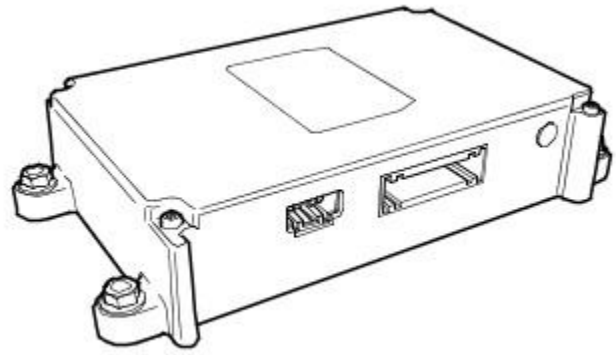

E58375

The PSE module is fixed to a bracket which also supports the Voice Activation Control Module (VACM) and the navigation control module.

The PSE module has one electrical connector and one optical connector. The module is unique to Jaguar, but utilizes carry over hardware.

The PSE module stores up to 500 phone numbers and the last 10 dialed phone numbers from the vehicle.

## Bluetooth Upgrade Module

The Bluetooth upgrade module is located under the center console and is attached to the center console using velcro.

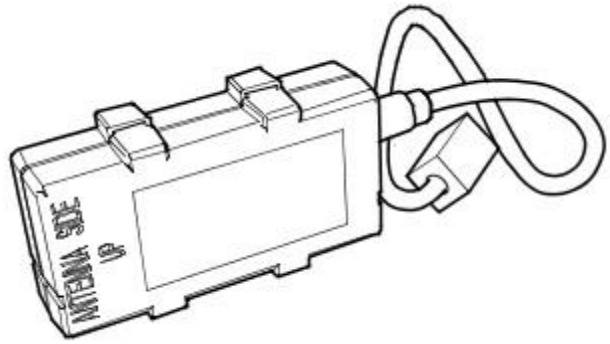

E58374

The Bluetooth upgrade module communicates with the drivers cellular phone and integrates it into the vehicle system transferring information such as call status and phonebook information to the PSE.

## Voice Activated Control Module

The voice activated control module is located in the left-hand side of the luggage compartment.

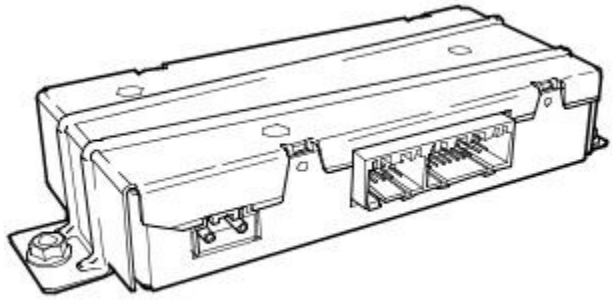

E58376

GETtheMANUALS.org

The voice activated control module is fixed to a bracket which also supports the PSE and the navigation control module.

The voice activated control module stores up to 40 voice tags.

## Microphone

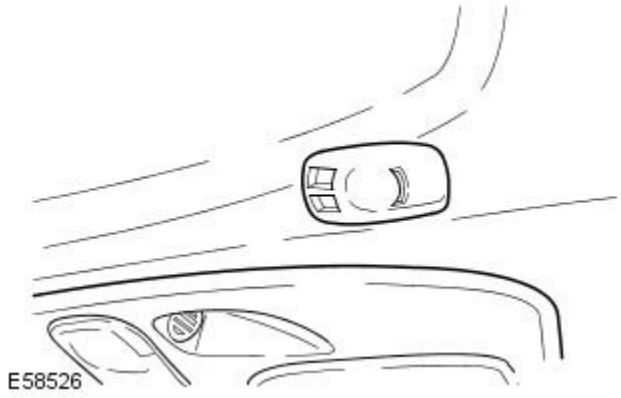


The microphone is located above the driver and is attached to the headliner.

## Steering Wheel Telematics Control Switches

To ensure minimum disruption to concentration when driving, limited control of audio, telephone and voice activation systems is possible using the steering wheel telematics control switches.

The control switches provide the following phone functionality:

- Answer phone call/end handsfree calls.
- Increase or decrease volume.
- Cycle through phone memory.

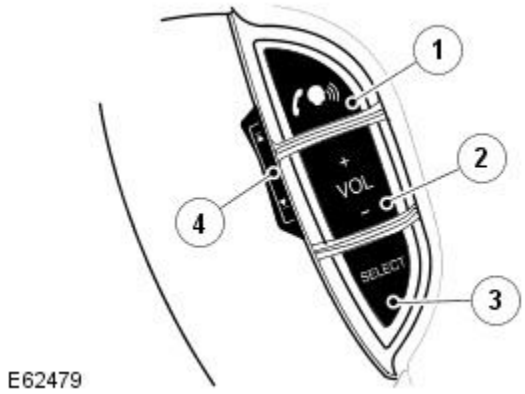


| Item | Description |
|---|---|
| 1 | Press to start voice session, or mute when voice is not fitted. Answer phone call when ringing. Send/End when in phone mode. |
| 2 | Press as required to increase or decrease volume. |
| 3 | Press and hold for 2 seconds to select Phone Ready mode. |
| 4 | In phone mode main screen, press to scroll up or down through the numbers stored in the phone memory. |

Refer to the Cellular Phone user guide for complete operating instructions.

GETtheMANUALS.org

# Cellular Phone - Cellular Phone

Diagnosis and Testing

## Inspection and Verification

The complexity of the electronics involved with the cellular phone preclude the use of workshop general electrical test equipment. Therefore, reference should be made to the Jaguar Approved Diagnostic System for detailed instructions on testing the cellular phone.

The Jaguar Approved Diagnostic System tests and analyses, in detail, all functions of the cellular phone.

Where a fault involving the cellular phone is indicated by the Jaguar Approved Diagnostic System, some basic diagnostic methods may be necessary to confirm that connections are good and that the wiring is not damaged, before installing new components.

1. **1.** Verify the customer concern by operating the portable cellular phone both in portable mode and while connected to the vehicle.
2. **2.** Make sure the portable convertible phone (US Only) is switched ON. With the power button ON, the system should be on while the ignition switch is in ACC or RUN.
3. **3.** Make sure the customer is calling within the coverage area. No Svc will appear in the display if the customer is calling from outside the coverage area.
4. **4.** Check to see if the Roam indicator is on. If so, follow the roaming instructions in the Cellular Phone User Guide.
5. **5.** Check to see if the display reads Locked CDMA/TDMA or pin for GSM. If so, press Clr and enter the customer three-digit unlock code for CDMA/TDMA or the customer pin number on the phone handset for GSM.
6. **6.** Make sure the portable cellular phone (US Only) is securely seated in the holder.
7. **7.** Make sure the GSM handset coil cord connector is correctly fitted to the armrest connector.
8. **8.** Check the portable cellular phone (US Only) antenna connections.
9. **9.** Check the portable cellular phone system registration (US Only). Also, check to make sure that the portable cellular phone is correctly programmed. Incorrect programming can result in single system scanning, loss of speed dialing, loss of hands-free audio, loss of auto redial, loss of dial tone multi-frequency tones, and the loss of other keypad/portable cellular phone functions.
10. **10.** Make sure that a valid SIM card is inserted in the handset SIM card reader (GSM Only)
11. **11.** Check the customer account status with the cellular carrier.

If the customer concern is still present, follow these steps to diagnose the concern:

12. **12.** Visually inspect for obvious signs of mechanical or electrical damage:

**Visual Inspection Chart**

| Mechanical | Electrical |
|---|---|
| • Portable cellular phone (US only)<br>• Microphone<br>• Portable cellular phone holder (US only)<br>• Coil cord | • Electrical connectors<br>• Wiring harness for damage or corrosion<br>• Fuses |

## System/Carrier Concerns - All Systems

Dropped calls, bad connections, noisy audio and other intermittent symptoms usually indicate a system or cellular carrier concern, and are not the fault of the phone itself. Such symptoms may occur in situations such as the following:

- In certain geographic areas (for example: areas of excessive foliage or hills) or at the edge of coverage areas.
- At the same place each day.
- At the same time each day.
- Under bridges, tunnels, in lower freeways, or in congested downtown areas.

If the customer phone exhibits any of the above symptoms or symptoms occur under the above conditions, the customer or the dealer should contact customer assistance at their particular cellular provider/carrier or call the assistance number provided in the Jaguar Cellular System Dealer kit.

## Other Possible Concerns - All Systems

1. **1.** If, for some reason, the customer's electronic serial number was incorrectly recorded in the carrier switch, the phone will not work. Call the assistance number provided in the Jaguar Cellular System Dealer kit to check the electronic serial number CDMA/TDMA only.
2. **2.** A customer initial call must be made in his/her home coverage area for correct activation of the Jaguar Cellular System.
3. **3.** A customer may have to wait until after 24 hours of the coverage activation before making a call from outside of his/her home coverage area or the phone might be reported stolen and coverage stopped.
4. **4.** There may be a slight delay in activation after leaving the dealership from initial delivery.

If, after checking these possibilities, the phone still does not function, do not attempt to repair the phone. Call the cellular phone distributor.

GETtheMANUALS.org

# Cellular Phone - Bluetooth Module

Removal and Installation

## Removal

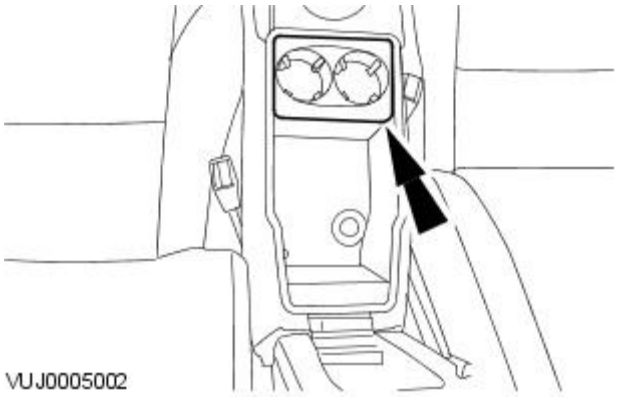


**1.** Remove the floor console cup holder.

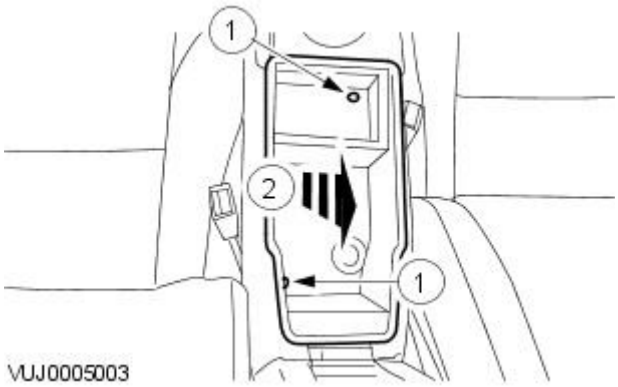


**2.** NOTE: Disconnect the auxiliary power point electrical connector if equipped.

Remove the floor console stowage compartment.

1. Remove the floor console stowage compartment retaining screws.
2. Remove the floor console stowage compartment.

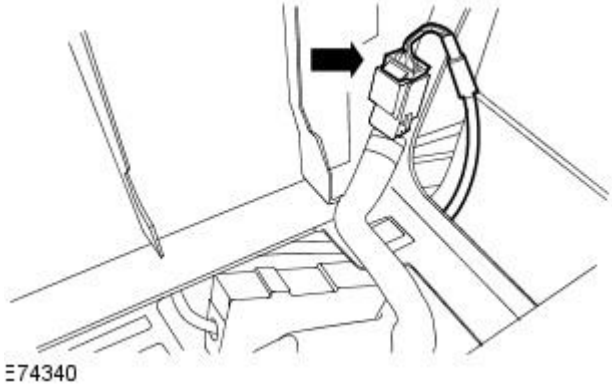


**3.** Disconnect the Bluetooth module electrical connector.

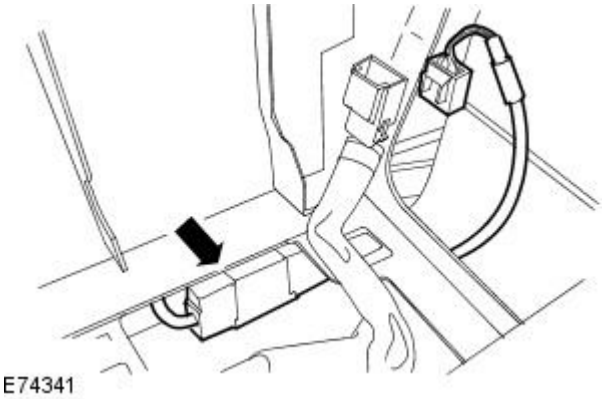


**4.** Remove the Bluetooth module.

## Installation

**1.** To install, reverse the removal procedure.

GETtheMANUALS.org

# Cellular Phone - Cellular PhoneVehicles With: Bluetooth

Diagnosis and Testing

## Overview

This section covers the components of the Bluetooth cellular phone system.

For information on the description and operation of the Bluetooth cellular phone system :
REFER to: Cellular Phone - VIN Range: N52048->N99999 (419-08 Cellular Phone, Description and Operation).

For additional information on the Bluetooth cellular phone system : REFER to owner information - Bluetooth telephone system handbook.

## Inspection and Verification

• NOTE: **Only cellular phones and software versions featured in the Jaguar Bluetooth approved phones and software list can be guaranteed to operate correctly.**

**Check the D2B ring order and circuit integrity.**

**Before pairing a handset to the Bluetooth phone system make sure that the handbook for the specific handset is available.**

1. **1.** Verify the customer concern by operating the system using the customers cellular phone.
2. **2.** Visually inspect for obvious signs of electrical damage.

**Visual Inspection Chart**

| Electrical |
|---|
| • Fuse(s)<br>• Wiring harness<br>• Electrical connector(s)<br>• Bluetooth cellular phone<br>• Microphone<br>• Steering wheel control<br>• Bluetooth upgrade module<br>• Portable support electronics (PSE) module<br>• Voice module |

3. **3.** If an obvious cause for an observed or reported concern is found, correct the cause (if possible) before proceeding to the next step.
4. **4.** Use the approved diagnostic system or a scan tool to retrieve any DTCs before moving onto the symptom chart.
   - Make sure that all DTCs are cleared following rectification.

## Symptom Chart

| Symptom | Action |
|---|---|
| "NO PHONE FITTED" (touch-screen) message displayed continuously or "NO PHONE" message displayed every time the phone mode button is pressed | GO to Pinpoint Test A. |
| "HANDSET IN USE" (touch-screen) message displayed for more than 2 minutes, or "HANDSET" message displayed every time the phone mode button is pressed and never changes to "SIG*" | GO to Pinpoint Test B. |
| Unable to pair the handset to telephone system | GO to Pinpoint Test C. |
| "PHONE OFF" message displayed (touch-screen only) | GO to Pinpoint Test D. |
| Cannot answer/reject/end call from the audio head unit/touch screen/steering wheel control | GO to Pinpoint Test E. |
| Unable to connect the handset to telephone system | GO to Pinpoint Test F. |
| Bluetooth connection is dropped | GO to Pinpoint Test G. |
| Incorrect or no phonebook entries | GO to Pinpoint Test H. |
| No third party audio | GO to Pinpoint Test I. |
| No in-vehicle audio | GO to Pinpoint Test J. |
| No ringing heard through the vehicle speakers | GO to Pinpoint Test K. |
| Low audio volume | GO to Pinpoint Test L. |
| Cannot dial out from audio head unit/touch-screen/steering wheel control | GO to Pinpoint Test M. |
| Voice activated phone functions inoperative | GO to Pinpoint Test N. |
| Call is dropped | GO to Pinpoint Test O. |
| Interference and distortion | GO to Pinpoint Test P. |
| Unable to transfer call between hands free and handset | GO to Pinpoint Test Q. |

## Pinpoint Tests

• NOTE: When performing voltage or resistance tests, always use a digital multimeter (DMM) accurate to three decimal places, and with an up-to-date calibration certificate. When testing resistance always take the resistance of the DMM leads into account.

GETtheMANUALS.org

• NOTE: Inspect connectors for signs of water ingress, and pins for damage and/or corrosion.

• NOTE: If a control module or component is suspect and the vehicle remains under manufacturer warranty, refer to the Warranty Policy and Procedures manual (section B1.2), or determine if any prior approval program is in operation, before the replacement of a component.

**PINPOINT TEST A : "NO PHONE FITTED" (TOUCH-SCREEN) MESSAGE DISPLAYED CONTINUOUSLY OR "NO PHONE" MESSAGE DISPLAYED EVERY TIME THE PHONE MODE BUTTON IS PRESSED**

| TEST CONDITIONS | DETAILS/RESULTS/ACTIONS |
|---|---|
| **A1:** | |
| | 1 |
| | Is the car a USA/Mexico/Canada car?<br>**Yes**<br>GO to A3.<br>**No**<br>GO to A2. |
| **A2:** | |
| | 1 |
| | Is the VIN of the car post VIN break for Bluetooth? (Refer to Technical Helpline for VIN break information).<br>**Yes**<br>GO to A3.<br>**No**<br>The Bluetooth system cannot be retrofitted to rest of world cars pre-VIN break or to those cars not fitted with the Bluetooth pre-wire due to a harness architecture change. |
| **A3:** | |
| | 1 |
| | Has the correct harness been fitted to the car?<br>**Yes**<br>GO to A4.<br>**No**<br>The Bluetooth system cannot be retrofitted to rest of world cars pre-VIN break or to those cars not fitted with the Bluetooth pre-wire due to a harness architecture change. (Refer to Technical Helpline for VIN break and pre-wire information). |
| **A4:** | |
| | 1 |
| | Does the display ever return to the main phone screen or ever display "PHONE"?<br>**Yes**<br>GO to A6.<br>**No**<br>GO to A5. |
| **A5:** | |
| | 1 |
| | Check the part number of the portable support electronics (PSE) module. Has the correct part been fitted?<br>**Yes**<br>Check power, ignition and ground circuits/connections at the PSE module.GO to A7.<br>**No**<br>Refer to the warranty policy and procedures manual if the PSE module is suspect. |
| **A6:** | |
| | 1 |
| | Are any of the D2B connections loose or damaged?<br>**Yes**<br>Reconnect/change/repair the D2B leads and check for normal operation.<br>**No**<br>GO to A7. |
| **A7:** | |
| | 1 |
| | Are power, ignition and ground being supplied to the portable support electronics (PSE) module?<br>**Yes**<br>Refer to the warranty policy and procedures manual if the PSE module is suspect.<br>**No**<br>Rectify as necessary. Refer to the electrical guides. |

**PINPOINT TEST B : "HANDSET IN USE" (TOUCH-SCREEN) MESSAGE DISPLAYED FOR MORE THAN 2 MINUTES OR "HANDSET" MESSAGE DISPLAYED EVERY TIME THE PHONE MODE BUTTON IS PRESSED AND NEVER CHANGES TO "SIG*"**

| TEST CONDITIONS | DETAILS/RESULTS/ACTIONS |
|---|---|
| **B1:** | |
| | 1 |
| | Has the system been paired to a handset?<br>**Yes**<br>Key off ignition and wait 6 minutes for the portable support electronics (PSE) module to shut down. The Bluetooth upgrade module remains active for 6 minutes after the ignition has been switched off. It is important to wait this 6 minutes so that a clean boot-up of the Bluetooth upgrade module is achieved and the correct information is stored. Switch off the paired handset; remove the battery from the back of the handset. Replace the battery into the handset and switch on, make sure the Bluetooth function is on and the handset is within range. Key on ignition. GO to B2.<br>**No**<br>GO to B3. |
| **B2:** | |
| | 1 |
| | Does the system still display "HANDSET IN USE" (touch-screen) message displayed for more than 2 minutes, or "HANDSET" message displayed every time the phone mode button is pressed and then drops out of phone mode?<br>**Yes**<br>GO to B3.<br>**No**<br>Problem may have been due to the Bluetooth link being disconnected. |
| **B3:** | |

GETtheMANUALS.org

| | |
|---|---|
| | 1 |
| | Is the connection between the Bluetooth upgrade module and the phone harness loose?<br>**Yes**<br>Reconnect the Bluetooth upgrade module and check for normal operation.<br>**No**<br>GO to B5. |
| **B4:** | |
| | 1 |
| | Are any of the Bluetooth upgrade module pins damaged?<br>**Yes**<br>Refer to the warranty policy and procedures manual if the Bluetooth upgrade module is suspect.<br>**No**<br>Check harness to/from the Bluetooth upgrade module and the portable support electronics (PSE) module.GO to B5. |
| **B5:** | |
| | 1 |
| | Is power being supplied to the Bluetooth upgrade module?<br>**Yes**<br>Refer to the warranty policy and procedures manual if the Bluetooth upgrade module is suspect.<br>**No**<br>GO to B6. |
| **B6:** | |
| | 1 |
| | Are power, ignition, and ground being supplied to the portable support electronics (PSE) module?<br>**Yes**<br>Refer to the warranty policy and procedures manual if the PSE module is suspect.<br>**No**<br>Rectify as necessary. Refer to the electrical guides. |

| **PINPOINT TEST C : - UNABLE TO PAIR THE HANDSET TO TELEPHONE SYSTEM** | |
|---|---|
| **TEST CONDITIONS** | **DETAILS/RESULTS/ACTIONS** |
| **C1:** | |
| | 1 |
| | Has another handset previously been paired to the system?<br>**Yes**<br>GO to C2.<br>**No**<br>GO to C3. |
| **C2:** | |
| | 1 |
| | Is the "HANDSET IN USE" (touch-screen) or "HANDSET" message displayed, or does the system drop out of phone mode?<br>**Yes**<br>Go to'"HANDSET IN USE" or "HANDSET"' message displayed - GO to Pinpoint Test B.<br>**No**<br>GO to C3. |
| **C3:** | |
| | 1 |
| | Does the touch-screen display "Discover Me" with 4 or 5 bars (The 5th bar will flash slowly) or does the audio head unit display "SIG****" or "SIG*****" (The 5th '*' will flash slowly)?<br>**Yes**<br>Retry the pairing process following the 'quick guide information' for the specific handset.GO to C4.<br>**No**<br>Enter the ##3#*# pairing key sequence.GO to C5. |
| **C4:** | |
| | 1 |
| | Has the handset paired with the system successfully? ("Phone connected" displayed (touch screen) or "SIG*" displayed (audio head unit display))?<br>**Yes**<br>Problem may have been due to a faulty Bluetooth connection.<br>**No**<br>Key off ignition and wait 6 minutes for the portable support electronics (PSE) module to shut down. The Bluetooth upgrade module remains active for 6 minutes after the ignition has been switched off. It is important to wait this 6 minutes so that a clean boot-up of the Bluetooth upgrade module is achieved and the correct information is stored. Switch off the paired handset; remove the battery from the back of the handset. Replace the battery into the handset and switch on, make sure the Bluetooth function is on and the handset is within range. Key on ignition. GO to C7. |
| **C5:** | |
| | 1 |
| | Does the touch-screen display "Discover Me" with 4 or 5 bars (The 5th bar will flash slowly) or does the audio head unit display "SIG****" or "SIG*****" (The 5th '*' will flash slowly)?<br>**Yes**<br>Retry the pairing process following the 'quick guide information' for the specific handset.<br>**No**<br>Key off ignition and wait 6 minutes for the portable support electronics (PSE) module to shut down. Key on ignition. GO to C6. |
| **C6:** | |
| | 1 |
| | Does the touch-screen display "Discover Me" with 4 or 5 bars (The 5th bar will flash slowly) or does the audio head unit display "SIG****" or "SIG*****" (The 5th '*' will flash slowly)?<br>**Yes**<br>Retry the pairing process following the 'quick guide information' for the specific handset.<br>**No**<br>GO to C9. |
| **C7:** | |
| | 1 |

GETtheMANUALS.org

| | |
|---|---|
| | Has the handset paired with the system successfully ("Phone connected" displayed (touch screen) or "SIG*" displayed (audio head unit display))?<br>**Yes**<br>Problem may have been due to a faulty Bluetooth connection.<br>**No**<br>Pair and connect a different known 'good' handset to the vehicle phone system. GO to C8. |
| **C8:** | |
| | 1 |
| | Has the handset paired with the system successfully ("Phone connected" displayed (touch screen) or "SIG*" displayed (audio head unit display))?<br>**Yes**<br>Problem may be an issue with the user's handset, consult the handset supplier.<br>**No**<br>GO to C9. |
| **C9:** | |
| | 1 |
| | Is the connection between the Bluetooth upgrade module and the phone harness loose?<br>**Yes**<br>Reconnect the Bluetooth upgrade module and check for normal operation.<br>**No**<br>GO to C10. |
| **C10:** | |
| | 1 |
| | Is power being supplied to the Bluetooth upgrade module?<br>**Yes**<br>Refer to the warranty policy and procedures manual if the Bluetooth upgrade module is suspect.<br>**No**<br>GO to C11. |
| **C11:** | |
| | 1 |
| | Are power, ignition, and ground being supplied to the portable support electronics (PSE) module?<br>**Yes**<br>Refer to the warranty policy and procedures manual if the PSE module is suspect.<br>**No**<br>Rectify as necessary. Refer to the electrical guides. |

**PINPOINT TEST D : "PHONE OFF" MESSAGE DISPLAYED (TOUCH-SCREEN ONLY)**

| TEST CONDITIONS | DETAILS/RESULTS/ACTIONS |
|---|---|
| **D1:** | |
| | 1 |
| | Is the Bluetooth system paired to a mobile phone handset?<br>**Yes**<br>GO to D2.<br>**No**<br>Key off ignition and wait 6 minutes for the portable support electronics (PSE) module to shut down. Key on ignition.GO to D5. |
| **D2:** | |
| | 1 |
| | Is the paired phone handset within range and switched on?<br>**Yes**<br>GO to D3.<br>**No**<br>GO to D4. |
| **D3:** | |
| | 1 |
| | Is the paired phone handset 'connected' to the vehicle phone system?<br>**Yes**<br>GO to D4.<br>**No**<br>Follow instructions to 'connect' specific handset with the vehicle phone system.GO to D4. |
| **D4:** | |
| | 1 |
| | Has the user switched out of phone mode e.g. audio, and then back to phone mode?<br>**Yes**<br>This is a system issue carried over from the previous phone system. Make sure that the last paired phone is on and within range, and test for normal operation.<br>**No**<br>Call Technical Helpline. |
| **D5:** | |
| | 1 |
| | Does the display still show the "PHONE OFF" message?<br>**Yes**<br>GO to D6.<br>**No**<br>Check for normal operation. |
| **D6:** | |
| | 1 |
| | Are the D2B connections loose or damaged?<br>**Yes**<br>Reconnect/change/repair the D2B leads and check for normal operation.<br>**No**<br>GO to D7. |
| **D7:** | |
| | 1 |

GETtheMANUALS.org

| | |
|---|---|
| | Check all connections/connectivity to and from the portable support electronics (PSE) module and the Bluetooth upgrade module. Are any of the harness connections loose or damaged?<br>**Yes**<br>Rectify as necessary. Refer to the electrical guides.<br>**No**<br>Refer to the warranty policy and procedures manual if a module is suspect. |

**PINPOINT TEST E : CANNOT ANSWER/REJECT/END CALL FROM THE AUDIO HEAD UNIT/TOUCH SCREEN/STEERING WHEEL CONTROL**

| TEST CONDITIONS | DETAILS/RESULTS/ACTIONS |
|---|---|
| **E1:** | |
| | 1 |
| | Cannot answer call?<br>**Yes**<br>Read DTCs from the portable support electronics (PSE) module using the approved diagnostic system and rectify as necessary.GO to E3.<br>**No**<br>GO to E2. |
| **E2:** | |
| | 1 |
| | Cannot reject/end call?<br>**Yes**<br>This is a network dependant feature, consult the relevant mobile phone network before continuing. Read DTCs from the portable support electronics (PSE) module using the approved diagnostic system and rectify as necessary.GO to E3.<br>**No**<br>GO to E3. |
| **E3:** | |
| | 1 |
| | Can call be answered/rejected/ended from the handset (with Bluetooth link still connected)?<br>**Yes**<br>GO to E4.<br>**No**<br>Disconnect the Bluetooth link between the handset and vehicle phone system and re-try the call.GO to E5. |
| **E4:** | |
| | 1 |
| | Is audio heard during call/call set up?<br>**Yes**<br>Refer to audio head unit diagnostics using the approved diagnostic system.<br>**No**<br>Check D2B ring is complete. Rectify as necessary. |
| **E5:** | |
| | 1 |
| | Can call be answered/rejected/ended from the handset with Bluetooth link disconnected?<br>**Yes**<br>Key off ignition and wait 6 minutes for the portable support electronics (PSE) module to shut down. Switch off the handset; remove the battery from the back of the handset. Replace the battery into the handset and switch on. Key on ignition. Make sure the Bluetooth link is reconnected and re-try the call.GO to E6.<br>**No**<br>This may be a handset issue, consult the handset supplier. |
| **E6:** | |
| | 1 |
| | Can the call be answered/rejected/ended from the handset (with Bluetooth link connected)?<br>**Yes**<br>Problem may have been due to the Bluetooth link being inoperative.<br>**No**<br>Pair and connect a different known 'good' handset to the vehicle phone system and make an incoming call.GO to E7. |
| **E7:** | |
| | 1 |
| | Can the call be answered/rejected/ended from the handset (with Bluetooth link connected)?<br>**Yes**<br>This may be a handset issue, consult the handset supplier.<br>**No**<br>GO to E8. |
| **E8:** | |
| | 1 |
| | Check all connections/connectivity to and from the portable support electronics (PSE) module and the Bluetooth upgrade module. Are any of the harness connections loose or damaged?<br>**Yes**<br>Rectify as necessary. Refer to the electrical guides.<br>**No**<br>Refer to the warranty policy and procedures manual if a module is suspect. |

**PINPOINT TEST F : UNABLE TO CONNECT THE HANDSET TO TELEPHONE SYSTEM**

| TEST CONDITIONS | DETAILS/RESULTS/ACTIONS |
|---|---|
| **F1:** | |
| | 1 |
| | Was the handset the last device to be connected to the vehicle?<br>**Yes**<br>GO to F2.<br>**No**<br>In the handset Bluetooth menu, delete any existing "Jaguar" devices from the list. Enter the ##3#*# key sequence to initiate the pairing process. Follow pairing process for the specific handset. GO to F6. |
| **F2:** | |
| | 1 |

GETtheMANUALS.org

| | |
|---|---|
| | In the handset Bluetooth menu, is "Jaguar" listed as a paired device?<br>**Yes**<br>GO to F3.<br>**No**<br>Follow pairing process for the specific handset. GO to F6. |
| **F3:** | |
| | 1 |
| | Is the handset 'connected' to another Bluetooth device (i.e. not "Jaguar")?<br>**Yes**<br>Check "Active Devices" in the handset's Bluetooth menu and disconnect the handset from the other Bluetooth device. Follow the instructions for the specific handset to allow the handset to 'connect' to the vehicle.GO to F8.<br>**No**<br>GO to F4. |
| **F4:** | |
| | 1 |
| | What message does the vehicle display show, "Connected" or "No BT Phone"?<br>**Yes**<br>Follow the vehicle un-pairing process, delete "Jaguar" from the handset device list and key off ignition for 6 minutes. Key on ignition. Follow the pairing process for the specific handset.GO to F6.<br>**No**<br>GO to F5. |
| **F5:** | |
| | 1 |
| | Is the vehicle in "Discover Me" mode?<br>**Yes**<br>Follow pairing process for the specific handset. GO to F6.<br>**No**<br>Go to'"HANDSET IN USE" or "HANDSET"' message displayed - GO to Pinpoint Test B. |
| **F6:** | |
| | 1 |
| | Has the handset paired successfully with the vehicle?<br>**Yes**<br>GO to F7.<br>**No**<br>Go to 'Unable to pair' - GO to Pinpoint Test C. |
| **F7:** | |
| | 1 |
| | Has the handset automatically connected to the vehicle phone system?<br>**Yes**<br>Following the instructions for the specific handset to make sure that the Bluetooth settings are set for automatic connection, connection should now be complete.<br>**No**<br>Follow the instructions for the specific handset to allow the handset to 'connect' to the vehicle.GO to F8. |
| **F8:** | |
| | 1 |
| | Has the handset connected to the vehicle phone system?<br>**Yes**<br>Following the instructions for the specific handset to make sure that the Bluetooth settings are set for automatic connection, connection should now be complete.<br>**No**<br>Key off ignition and wait 6 minutes for the portable support electronics (PSE) module to shut down. Switch off the handset; remove the battery from the back of the handset. Replace the battery into the handset and switch on. Key on ignition. Re-try pairing and connecting. GO to F9. |
| **F9:** | |
| | 1 |
| | Has the handset connected to the vehicle phone system?<br>**Yes**<br>Following the instructions for the specific handset to make sure that the Bluetooth settings are set for automatic connection, connection should now be complete.<br>**No**<br>Pair and connect a different known 'good' handset to the vehicle phone system. GO to F10. |
| **F10:** | |
| | 1 |
| | Does the handset 'connect' OK?<br>**Yes**<br>This is a handset issue, consult the handset supplier.<br>**No**<br>Refer to the warranty policy and procedures manual if the Bluetooth upgrade module is suspect. |

| **PINPOINT TEST G : BLUETOOTH CONNECTION IS DROPPED** | |
|---|---|
| **TEST CONDITIONS** | **DETAILS/RESULTS/ACTIONS** |
| **G1:** | |
| | 1 |
| | Does the handset battery have a good level of charge?<br>**Yes**<br>GO to G2.<br>**No**<br>Recharge the handset battery. Bluetooth performance cannot be guaranteed with low battery power. |
| **G2:** | |
| | 1 |
| | Does the handset show good signal strength?<br>**Yes**<br>GO to G3.<br>**No**<br>Without good signal strength, the vehicle display will show "SIG _____" or "No BT Phone" or "No Service". Move into an area with good signal strength and check for normal operation. |
| **G3:** | |

GETthemANUALS.org

| | |
|---|---|
| | 1 |
| | Check the handset menu. Has auto connect been turned on?<br>**Yes**<br>GO to G4.<br>**No**<br>Switch auto connect on and check for normal operation. |
| **G4:** | |
| | 1 |
| | Has the user tried to transfer a call from hands free to handset?<br>**Yes**<br>Check the handset guide info, some handsets will not auto reconnect Bluetooth after a handset call.<br>**No**<br>GO to G5. |
| **G5:** | |
| | 1 |
| | Does the handset display show that it is connected to the vehicle?<br>**Yes**<br>GO to G7.<br>**No**<br>GO to G6. |
| **G6:** | |
| | 1 |
| | Does the vehicle display "SIG_____" or "No BT Phone"?<br>**Yes**<br>Follow instructions for the specific handset to 'connect' the handset to vehicle.GO to G10.<br>**No**<br>GO to G7. |
| **G7:** | |
| | 1 |
| | Does the vehicle display "SIG*" or "Phone Connected"?<br>**Yes**<br>Bluetooth connection has not been dropped, check for normal operation.<br>**No**<br>Key off ignition and wait 6 minutes for the portable support electronics (PSE) module to shut down. Switch off the handset; remove the battery from the back of the handset. Replace the battery into the handset and switch on. Key on ignition. GO to G8. |
| **G8:** | |
| | 1 |
| | Does the vehicle display "SIG*" or "Phone Connected"?<br>**Yes**<br>Check for normal operation.<br>**No**<br>Follow the vehicle un-pairing process, delete "Jaguar" from the handset device list and key off ignition for 6 minutes. Key on ignition. Follow pairing process for the specific handset. GO to G9. |
| **G9:** | |
| | 1 |
| | Has the handset paired successfully with the vehicle?<br>**Yes**<br>Follow instructions for the specific handset to 'connect' the handset to vehicle.GO to G10.<br>**No**<br>Go to 'Unable to pair' - GO to Pinpoint Test C. |
| **G10:** | |
| | 1 |
| | Does the handset 'connect'?<br>**Yes**<br>GO to G11.<br>**No**<br>Go to 'Unable to connect' - GO to Pinpoint Test F. |
| **G11:** | |
| | 1 |
| | Does the vehicle display show that it is 'connected'?<br>**Yes**<br>Check for normal operation.<br>**No**<br>Refer to the warranty policy and procedures manual if the Bluetooth upgrade module is suspect. |

## PINPOINT TEST H : INCORRECT OR NO PHONEBOOK ENTRIES

| TEST CONDITIONS | DETAILS/RESULTS/ACTIONS |
|---|---|
| **H1:** | |
| | 1 |
| | Check the Jaguar Bluetooth approved phone list guide: Does the handset support phonebook download?<br>**Yes**<br>GO to H2.<br>**No**<br>Advise user that the handset does not support phonebook download. |
| **H2:** | |
| | 1 |
| | Is the Bluetooth system paired and connected to a phone handset?<br>**Yes**<br>GO to H3.<br>**No**<br>Pair and connect an approved handset to the vehicle phone system.GO to H2. |
| **H3:** | |
| | 1 |

GETtheMANUALS.org

| | |
|---|---|
| | Has the user followed vehicle and handset instructions for downloading phonebook?<br>**Yes**<br>GO to H4.<br>**No**<br>Refer to the vehicle handbooks/handset 'quick guide information' regarding phonebook download. Check for normal operation. |
| **H4:** | |
| | 1 |
| | After "Downloading the phonebook" has the ignition been switched off for 6 minutes?<br>**Yes**<br>GO to H7.<br>**No**<br>Make sure that the ignition has been switched off for 6 minutes after following process for downloading phonebook. The Bluetooth upgrade module remains active for 6 minutes after the ignition has been switched off. It is important to wait this 6 minutes so that a clean boot-up of the Bluetooth upgrade module is achieved and the correct information is stored. Switch ignition on to prompt the portable support electronics (PSE) module to pull phonebook entries from the Bluetooth upgrade module. GO to H5. |
| **H5:** | |
| | 1 |
| | Can the user view the phonebook entries on the vehicle display?<br>**Yes**<br>End.<br>**No**<br>GO to H6. |
| **H6:** | |
| | 1 |
| | Have two or more handsets been tried?<br>**Yes**<br>GO to H9.<br>**No**<br>Pair and connect a different known 'good' handset which will automatically download the phonebook to the vehicle phone system. GO to H9. |
| **H7:** | |
| | 1 |
| | After switching the ignition back on, does the handset connect to the vehicle phone system?<br>**Yes**<br>GO to H8.<br>**No**<br>Reconnect the handset and make sure auto-reconnect is set to on.GO to H7. |
| **H8:** | |
| | 1 |
| | Is the phonebook available on the vehicle display?<br>**Yes**<br>End<br>**No**<br>Pair and connect a different known 'good' handset which will automatically download the phonebook to the vehicle phone system.GO to H9. |
| **H9:** | |
| | 1 |
| | Is the phonebook available on the vehicle display?<br>**Yes**<br>This is an issue with the user's handset, consult the handset supplier.<br>**No**<br>Refer to the warranty policy and procedures manual if a module is suspect. |

**PINPOINT TEST I : NO THIRD PARTY AUDIO**

| TEST CONDITIONS | DETAILS/RESULTS/ACTIONS |
|---|---|
| **I1:** | |
| | 1 Check the handset manual and the handset settings to make sure user's speech is routed through the vehicle microphone and not the handset microphone. |
| | Does 3rd party call audio work with the call in 'handset' mode?<br>**Yes**<br>Check for telephone related DTCs using the approved diagnostic system. Rectify as necessary.GO to I5.<br>**No**<br>GO to I2. |
| **I2:** | |
| | 1 |
| | Is there any 3rd party call audio with the handset disconnected from the Bluetooth system?<br>**Yes**<br>Pair and connect a different known 'good' handset to the vehicle phone system and make a call to the 3rd party. GO to I4.<br>**No**<br>Try calling another 3rd party from the handset.GO to I3. |
| **I3:** | |
| | 1 |
| | Is there any 3rd party audio?<br>**Yes**<br>Initial audio problem may be due to a fault at 3rd party end. Check by calling them on another number.<br>**No**<br>This may be a handset issue, consult the handset supplier. |
| **I4:** | |
| | 1 |
| | Does the 3rd party call audio work with the Bluetooth system?<br>**Yes**<br>This may be a handset issue, consult the handset supplier.<br>**No**<br>Check for telephone related DTCs using the approved diagnostic system. Rectify as necessary.GO to I5. |

GETtheMANUALS.org

**I5:**

1

Is there any 3rd party audio?

**Yes**

End.

**No**

Disconnect the Bluetooth link between the handset and vehicle phone system and re-try the call.GO to I6.

**I6:**

1

Does the 3rd party call audio work with the mobile phone disconnected from the vehicle?

**Yes**

Re-connect the Bluetooth link between the handset and the vehicle phone system and re-try the call.GO to I8.

**No**

Switch off the handset, remove the battery from the back of the handset. Replace the battery into the handset and switch on. Make sure the Bluetooth link is disconnected and re-try the call.GO to I7.

**I7:**

1

Does the 3rd party call audio work with the mobile phone disconnected from the vehicle?

**Yes**

Problem may be due to a faulty Bluetooth connection.

**No**

This may be a handset issue, consult the handset supplier.

**I8:**

1

Does the 3rd party call audio work with the Bluetooth system?

**Yes**

Problem may be due to a faulty Bluetooth connection.

**No**

GO to I9.

**I9:**

1

Does the 3rd party call audio work with the mobile phone in 'handset' mode?

**Yes**

GO to I10.

**No**

Key off ignition and wait 6 minutes for the portable support electronics (PSE) module to shut down. Key on ignition. Make sure the Bluetooth link is re-connected and re-try the call pairing and connecting.GO to I14.

**I10:**

1

Does the vehicle have voice control fitted?

**Yes**

GO to I11.

**No**

GO to I12.

**I11:**

1

Does the voice control pick up commands from the user?

**Yes**

Check harness connections between the microphone and the portable support electronics (PSE) module are not loose or damaged.GO to I16.

**No**

Refer to the warranty policy and procedures manual if the voice control module is suspect.

**I12:**

1

Is the vehicle a USA/Canada/Mexico vehicle?

**Yes**

GO to I13.

**No**

Check harness connections between the microphone and the portable support electronics (PSE) module are not loose or damaged.GO to I16.

**I13:**

1

Does the vehicle have the voice control shorting loop fitted?

**Yes**

Check harness connections between the microphone and the portable support electronics (PSE) module are not loose or damaged.GO to I16.

**No**

Fit the voice control shorting loop and check for normal operation.

**I14:**

1

Does the 3rd party call audio work with the Bluetooth system?

**Yes**

Problem may be due to a faulty Bluetooth connection.

**No**

Pair and connect a different known 'good' handset to the vehicle phone system and make an incoming call.GO to I15.

**I15:**

1

Does the 3rd party call audio work with the Bluetooth system?

**Yes**

This may be a handset issue, consult the handset supplier.

**No**

Check harness connections between the microphone and the portable support electronics (PSE) module are not loose or damaged.GO to I16.

**I16:**

1

GETtheMANUALS.org

| | |
|---|---|
| | Are the microphone harness connections damaged?<br>**Yes**<br>Rectify as necessary. Refer to the electrical guides.<br>**No**<br>Replace the microphone and re-try the call. GO to I17. |
| **I17:** | |
| | 1 |
| | Does the 3rd party call audio work with the Bluetooth system?<br>**Yes**<br>Problem may have been due to a faulty microphone.<br>**No**<br>Refer to the warranty policy and procedures manual if a module is suspect. |

## PINPOINT TEST J : NO IN-VEHICLE AUDIO

| TEST CONDITIONS | DETAILS/RESULTS/ACTIONS |
|---|---|
| **J1:** | |
| | 1 |
| | Can the audio sources be heard through the vehicle speakers e.g. radio?<br>**Yes**<br>GO to J2.<br>**No**<br>Check D2B connections are not loose or damaged. Reconnect/change/repair the D2B leads and check for normal operation. |
| **J2:** | |
| | 1 |
| | Can the call be heard when transferred to the handset?<br>**Yes**<br>Key off ignition and wait 6 minutes for the portable support electronics (PSE) module to shut down. Key on ignition. Make sure the Bluetooth link is reconnected and re-try the call. GO to J3.<br>**No**<br>Disconnect the Bluetooth link between the handset and vehicle phone system and re-try the call. GO to J4. |
| **J3:** | |
| | 1 |
| | Can the audio be heard through the vehicle speakers?<br>**Yes**<br>The audio problem may have been due to the Bluetooth link being disconnected.<br>**No**<br>Pair and connect a different known 'good' handset to the vehicle phone system and make a call to the 3rd party.GO to J7. |
| **J4:** | |
| | 1 |
| | Does the handset audio work with mobile phone disconnected from the vehicle?<br>**Yes**<br>Key off ignition and wait 6 minutes for the portable support electronics (PSE) module to shut down. Key on ignition. Switch off the handset; remove the battery from the back of the handset. Replace the battery into the handset and switch on. Key on ignition. Make sure the Bluetooth link is reconnected and re-try the call. GO to J6.<br>**No**<br>Try calling another 3rd party from the handset. GO to J5. |
| **J5:** | |
| | 1 |
| | Is there any call audio on the handset?<br>**Yes**<br>Initial audio problem may be due to a fault at the 3rd party end, check by calling them on another number.<br>**No**<br>This may be a handset issue, consult the handset supplier. |
| **J6:** | |
| | 1 |
| | Can the audio be heard through the vehicle speakers?<br>**Yes**<br>The audio problem may have been due to the Bluetooth link being disconnected.<br>**No**<br>Pair and connect a different known 'good' handset to the vehicle phone system and make a call to the 3rd party.GO to J7. |
| **J7:** | |
| | 1 |
| | Can the audio be heard through the vehicle speakers?<br>**Yes**<br>This may be a handset issue, consult the handset supplier.<br>**No**<br>Check harness connections between the Bluetooth upgrade module and the portable support electronics (PSE) module. GO to J8. |
| **J8:** | |
| | 1 |
| | Are any of the harness connections damaged?<br>**Yes**<br>Rectify as necessary. Refer to the electrical guides.<br>**No**<br>Refer to the warranty policy and procedures manual if a module is suspect. |

## PINPOINT TEST K : NO RINGING HEARD THROUGH THE VEHICLE SPEAKERS

| TEST CONDITIONS | DETAILS/RESULTS/ACTIONS |
|---|---|
| **K1:** | |
| | 1 |

GETtheMANUALS.org

| | |
|---|---|
| | When there is no call in progress, and the audio source is changed, is any audio heard e.g. from radio?<br>**Yes**<br>GO to K3.<br>**No**<br>Check D2B connections are not loose and that all nodes are connected on the D2B ring. Rectify as necessary.GO to K2. |
| **K2:** | |
| | 1 |
| | Are any of the D2B connections damaged?<br>**Yes**<br>Change/repair the D2B leads and check for normal operation.<br>**No**<br>Call Technical Helpline. |
| **K3:** | |
| | 1 |
| | Is the vehicle phone system volume set to more than 15?<br>**Yes**<br>GO to K4.<br>**No**<br>Make sure that the vehicle phone system is set to more than 15 and retry the call. |
| **K4:** | |
| | 1 |
| | Is the message "incoming call" displayed?<br>**Yes**<br>GO to K5.<br>**No**<br>GO to K6. |
| **K5:** | |
| | 1 |
| | On answering the incoming call using the vehicle controls, can the 3rd party be heard through the vehicle speakers?<br>**Yes**<br>GO to K6.<br>**No**<br>Go to 'No in-vehicle audio' - GO to Pinpoint Test J. |
| **K6:** | |
| | 1 |
| | Is there any ringing heard on the handset with the Bluetooth link connected?<br>**Yes**<br>GO to K7.<br>**No**<br>GO to K10. |
| **K7:** | |
| | 1 |
| | Does the handset support in-band ringing or send its ringing status to the Bluetooth upgrade module?<br>**Yes**<br>Key off ignition and wait 6 minutes for the portable support electronics (PSE) module to shut down. Key on ignition. Make sure the Bluetooth link is re-connected and re-try the call. GO to K8.<br>**No**<br>This is a handset issue, contact the handset supplier or replace with another handset from the approved list. |
| **K8:** | |
| | 1 |
| | Can any ringing be heard through the vehicle speakers?<br>**Yes**<br>The audio problem may have been due to the Bluetooth link being disconnected.<br>**No**<br>Un-pair the current handset and pair/connect a known good handset with the vehicle. Make an incoming call. GO to K9. |
| **K9:** | |
| | 1 |
| | Can any ringing be heard through the vehicle speakers?<br>**Yes**<br>Contact the handset supplier, the handset may be faulty.<br>**No**<br>GO to K10. |
| **K10:** | |
| | 1 |
| | Is the message "incoming call" displayed?<br>**Yes**<br>Check the handset instructions to find "profile" settings.GO to K14.<br>**No**<br>GO to K11. |
| **K11:** | |
| | 1 |
| | Does the handset have good signal strength?<br>**Yes**<br>Disconnect the Bluetooth connection. Make sure the handset is not set to silent. Then make an incoming call. GO to K12.<br>**No**<br>Move into area where the handset receives good signal strength. Make an incoming call and check for normal operation. |
| **K12:** | |
| | 1 |
| | Is there any ringing heard on the handset with the Bluetooth link disconnected?<br>**Yes**<br>Reconnect the Bluetooth connection, and then make an incoming call. GO to K13.<br>**No**<br>Contact the handset supplier, the handset may be faulty. |
| **K13:** | |

GETtheMANUALS.org

| | |
|---|---|
| | 1 |
| | Can any ringing be heard through the vehicle speakers?<br>**Yes**<br>Problem due to a faulty Bluetooth link.<br>**No**<br>GO to K4. |
| **K14:** | |
| | 1 |
| | Has the handset "profile" been set to "silent"?<br>**Yes**<br>Change settings within profile, make an incoming call and check for normal operation.<br>**No**<br>GO to K15. |
| **K15:** | |
| | 1 |
| | Has the handset volume been set to minimum?<br>**Yes**<br>Increase volume setting, make an incoming call and check for normal operation.<br>**No**<br>Check Bluetooth connection between the handset and vehicle is OK. GO to K16. |
| **K16:** | |
| | 1 |
| | Is the Bluetooth connection OK?<br>**Yes**<br>Disconnect the Bluetooth connection. Make sure that the handset is NOT set to silent, then make an incoming call.GO to K17.<br>**No**<br>Follow the handset instructions for 'connecting' the Bluetooth link, then make an incoming call and check for normal operation. |
| **K17:** | |
| | 1 |
| | Is there any ringing heard on the handset?<br>**Yes**<br>Reconnect Bluetooth link between the handset and vehicle.GO to K18.<br>**No**<br>Un-pair the current handset and pair/connect a known good handset with the vehicle. Make an incoming call. GO to K9. |
| **K18:** | |
| | 1 |
| | Can any ringing be heard through the vehicle speakers?<br>**Yes**<br>Change settings within profile, make an incoming call and check for normal operation.<br>**No**<br>Check harness connections between the Bluetooth upgrade module and the portable support electronics (PSE) module.GO to K19. |
| **K19:** | |
| | 1 |
| | Are any of the harness connections damaged?<br>**Yes**<br>Rectify as necessary. Refer to the electrical guides.<br>**No**<br>Refer to the warranty policy and procedures manual if a module is suspect. |

| **PINPOINT TEST L : LOW AUDIO VOLUME** | |
|---|---|
| **TEST CONDITIONS** | **DETAILS/RESULTS/ACTIONS** |
| **L1:** | |
| | 1 |
| | Low volume in vehicle (rather than at 3rd party)?<br>**Yes**<br>GO to L2.<br>**No**<br>If volume is low at 3rd party.GO to L9. |
| **L2:** | |
| | 1 |
| | Is the vehicle phone volume set at 12 or above?<br>**Yes**<br>Check fade & balance are both set at '0' or mid point on slider controls. GO to L3.<br>**No**<br>Increase phone volume to above 12. GO to L1. |
| **L3:** | |
| | 1 |
| | Is radio volume OK?<br>**Yes**<br>GO to L4.<br>**No**<br>Call Technical Helpline. |
| **L4:** | |
| | 1 |
| | Is Bluetooth link between the handset and vehicle still connected?<br>**Yes**<br>GO to L5.<br>**No**<br>Re-connect the Bluetooth link and re-try the call.GO to L1. |
| **L5:** | |
| | 1 |

GETtheMANUALS.org

| | |
|---|---|
| | Is call volume still low when call transferred to 'handset' mode?<br>**Yes**<br>GO to L6.<br>**No**<br>Key off ignition and wait 6 minutes for the portable support electronics (PSE) module to shut down. Key on ignition and re-try the call. GO to L16. |
| **L6:** | |
| | 1 |
| | Is the call volume still low with the handset disconnected from the Bluetooth system?<br>**Yes**<br>GO to L7.<br>**No**<br>Try calling another 3rd party from the handset.GO to L8. |
| **L7:** | |
| | 1 |
| | Is the handset volume setting low?<br>**Yes**<br>Increase the handset volume setting and re-try the call.GO to L6.<br>**No**<br>Low audio issue due to the handset, consult the handset supplier. |
| **L8:** | |
| | 1 |
| | Is the call volume still low with the handset disconnected from the Bluetooth system?<br>**Yes**<br>Low audio issue due to the handset, consult the handset supplier.<br>**No**<br>Initial audio problem may be due to a fault at the 3rd party end. Check by calling them on another number. |
| **L9:** | |
| | 1 |
| | Check that handset volume setting and signal strength are not low. Is call volume still low when call transferred to 'handset' mode?<br>**Yes**<br>GO to L14.<br>**No**<br>GO to L10. |
| **L10:** | |
| | 1 |
| | Is the microphone fitted OK? Check DTCs using the approved diagnostic system.<br>**Yes**<br>GO to L12.<br>**No**<br>Rectify as necessary.GO to L11. |
| **L11:** | |
| | 1 |
| | Is volume still low?<br>**Yes**<br>GO to L12.<br>**No**<br>Issue caused by faulty microphone or microphone circuit. |
| **L12:** | |
| | 1 |
| | Is voice control fitted to vehicle?<br>**Yes**<br>Disconnect the voice control module and fit the voice control shorting loop to the wiring harness.GO to L13.<br>**No**<br>GO to L14. |
| **L13:** | |
| | 1 |
| | Is volume still low?<br>**Yes**<br>GO to L14.<br>**No**<br>Refer to voice control diagnostics. |
| **L14:** | |
| | 1 |
| | Is the 3rd party call audio still low with the handset disconnected from the Bluetooth system?<br>**Yes**<br>Pair and connect a different known 'good' handset to the vehicle phone system and make a call to a 3rd party.GO to L17.<br>**No**<br>Re-connect Bluetooth link and re-try the call.GO to L15. |
| **L15:** | |
| | 1 |
| | Is volume still low?<br>**Yes**<br>Key off ignition and wait 6 minutes for the portable support electronics (PSE) module to shut down. Key on ignition and re-try the call.GO to L16.<br>**No**<br>Issue caused by a faulty Bluetooth connection. |
| **L16:** | |
| | 1 |
| | Is volume still low?<br>**Yes**<br>Refer to the warranty policy and procedures manual if a module is suspect.<br>**No**<br>Issue caused by a faulty Bluetooth connection. |
| **L17:** | |
| | 1 |

GETtheMANUALS.org

| | |
|---|---|
| | Is volume still low?<br>**Yes**<br>Refer to the warranty policy and procedures manual if a module is suspect.<br>**No**<br>Low audio issue caused by the handset, consult the handset supplier. |

## PINPOINT TEST M : CANNOT DIAL OUT FROM AUDIO HEAD UNIT/TOUCH-SCREEN/STEERING WHEEL CONTROL

| TEST CONDITIONS | DETAILS/RESULTS/ACTIONS |
|---|---|
| **M1:** | |
| | 1 |
| | Is D2B ring complete?<br>**Yes**<br>GO to M2.<br>**No**<br>Reconnect/change/repair the D2B leads and check for normal operation. |
| **M2:** | |
| | 1 |
| | Does display show "NO SERVICE" or drop out of phone mode?<br>**Yes**<br>GO to M3.<br>**No**<br>GO to M4. |
| **M3:** | |
| | 1 |
| | Signal strength on the handset greater than 1?<br>**Yes**<br>GO to M4.<br>**No**<br>Re-try call in a stronger signal strength area, low signal strength can cause interference and distortion in car and at 3rd party. |
| **M4:** | |
| | 1 |
| | Can user dial out from the handset?<br>**Yes**<br>Key off ignition and wait 6 minutes for the portable support electronics (PSE) module to shut down. Key on ignition. Make sure the Bluetooth link is reconnected and re-try the call.GO to M5.<br>**No**<br>Switch off the handset, remove the battery from the back of the handset. Replace the battery into the handset and switch on. Make sure the Bluetooth link is reconnected and re-try the call.GO to M5. |
| **M5:** | |
| | 1 |
| | Can user dial out from audio head unit or steering wheel control?<br>**Yes**<br>Problem may have been caused by the Bluetooth link being disconnected.<br>**No**<br>Pair and connect a different known 'good' handset to the vehicle phone system and make an incoming call.GO to M6. |
| **M6:** | |
| | 1 |
| | Can user dial out from audio head unit or steering wheel control?<br>**Yes**<br>This may be a handset issue, consult the handset supplier.<br>**No**<br>Refer to the warranty policy and procedures manual if a module is suspect. |

## PINPOINT TEST N : VOICE ACTIVATED PHONE FUNCTIONS INOPERATIVE

| TEST CONDITIONS | DETAILS/RESULTS/ACTIONS |
|---|---|
| **N1:** | |
| | 1 Make sure that the customer has completed voice recognition training. |
| | Check audio head unit DTCs using the approved diagnostic system, are there any audio head unit DTCs stored?<br>**Yes**<br>Carry out the pinpoint tests associated with the relevant DTCs using the manufacturer approved diagnostic system.<br>**No**<br>GO to N2. |
| **N2:** | |
| | 1 |
| | Is there a dial problem?<br>**Yes**<br>GO to N3.<br>**No**<br>GO to N5. |
| **N3:** | |
| | 1 |
| | Dials wrong number?<br>**Yes**<br>GO to N7.<br>**No**<br>GO to N4. |
| **N4:** | |
| | 1 |
| | Will not dial?<br>**Yes**<br>GO to N9.<br>**No**<br>GO to N5. |
| **N5:** | |

GETtheMANUALS.org

| | |
|---|---|
| | 1 |
| | Cannot dial using voice control?<br>**Yes**<br>GO to N8.<br>**No**<br>GO to N6. |
| **N6:** | |
| | 1 |
| | Cannot turn phone on/off?<br>**Yes**<br>GO to N8.<br>**No**<br>GO to N10. |
| **N7:** | |
| | 1 |
| | Is the handset on the approved phone list?<br>**Yes**<br>Call Technical Helpline.<br>**No**<br>Only handsets specified in the approved list with the correct level of software can be guaranteed to work. |
| **N8:** | |
| | 1 |
| | Is voice control on the D2B ring?<br>**Yes**<br>GO to N9.<br>**No**<br>Not a phone issue. |
| **N9:** | |
| | 1 |
| | Does verbal communication confirm correct number?<br>**Yes**<br>GO to N10.<br>**No**<br>Not a phone issue. |
| **N10:** | |
| | 1 |
| | Does the audio head unit/touch-screen show "NO PHONE" or "PHONE NOT FITTED" (i.e. is phone off the D2B ring)?<br>**Yes**<br>GO to N11.<br>**No**<br>GO to N12. |
| **N11:** | |
| | 1 Are any of the D2B connections loose or damaged? |
| | **Yes**<br>Reconnect/change/repair the D2B leads and check for normal operation.<br>**No**<br>Refer to the warranty policy and procedures manual if a module is suspect. |
| **N12:** | |
| | 1 |
| | Check all connections/connectivity to and from the portable support electronics (PSE) module and the Bluetooth upgrade module. Are any of the harness connections loose or damaged?<br>**Yes**<br>Rectify as necessary. Refer to the electrical guides.<br>**No**<br>Refer to the warranty policy and procedures manual if a module is suspect. |

## PINPOINT TEST O : CALL IS DROPPED

| TEST CONDITIONS | DETAILS/RESULTS/ACTIONS |
|---|---|
| **O1:** | |
| | 1 |
| | Is the 3rd party call to another cellular phone?<br>**Yes**<br>GO to O3.<br>**No**<br>GO to O2. |
| **O2:** | |
| | 1 |
| | Is the 3rd party call to a landline?<br>**Yes**<br>Disconnect the Bluetooth link between the handset and vehicle phone system. Re-try the call in the vehicle, preferably with the handset in the same position as when connected via the Bluetooth link. GO to O4.<br>**No**<br>GO to O5. |
| **O3:** | |
| | 1 |
| | Is the signal strength on the 3rd party handset greater than 1?<br>**Yes**<br>Disconnect the Bluetooth link between the handset and vehicle phone system. Re-try the call in the vehicle, preferably with the handset in the same position as when connected via the Bluetooth link. GO to O4.<br>**No**<br>Re-try call in stronger signal strength area. Low signal strength can lead to calls being dropped. |
| **O4:** | |
| | 1 |

GETtheMANUALS.org

| | |
|---|---|
| | Is the call dropped again?<br>**Yes**<br>Pair and connect a different known 'good' handset to the vehicle phone system and make an incoming call. GO to O7.<br>**No**<br>Switch off the handset, remove the battery from the back of the handset. Replace the battery into the handset and switch on. Make sure the Bluetooth link is reconnected and re-try the call.GO to O5. |
| **O5:** | |
| | 1 |
| | Is the call dropped again?<br>**Yes**<br>Key off ignition and wait 6 minutes for the portable support electronics (PSE) module to shut down. Key on ignition. Make sure the Bluetooth link is reconnected and re-try the call.GO to O6.<br>**No**<br>Problem may have been caused by the Bluetooth link being disconnected. |
| **O6:** | |
| | 1 |
| | Is the call dropped again?<br>**Yes**<br>Pair and connect a different known 'good' handset to the vehicle phone system and make an incoming call.GO to O7.<br>**No**<br>Problem may have been caused by the Bluetooth link being disconnected. |
| **O7:** | |
| | 1 |
| | Is the call dropped again?<br>**Yes**<br>Refer to the warranty policy and procedures manual if a module is suspect.<br>**No**<br>This may be a handset issue, consult the handset supplier. |

## PINPOINT TEST P : INTERFERENCE AND DISTORTION

| TEST CONDITIONS | DETAILS/RESULTS/ACTIONS |
|---|---|
| **P1:** | |
| | 1 |
| | Is interference present with Bluetooth link disconnected?<br>**Yes**<br>GO to P2.<br>**No**<br>Check for external sources of interference. Drive to where the customer has problems to identify if location dependant. Test in an area of known high signal strength.GO to P4. |
| **P2:** | |
| | 1 |
| | Is it present with a different known 'good' handset paired/connected?<br>**Yes**<br>GO to P3.<br>**No**<br>This may be a handset issue, consult the handset supplier. |
| **P3:** | |
| | 1 |
| | Is it present with other network carriers?<br>**Yes**<br>Check for external sources of interference. Drive to where the customer has problems to identify if location dependant. Test in an area of known high signal strength.GO to P4.<br>**No**<br>This may be a network or handset issue, consult the handset supplier/network provider. |
| **P4:** | |
| | 1 |
| | Are there any powered items/aftermarket accessories in the car?<br>**Yes**<br>Switch off any powered items/aftermarket accessories in the car.GO to P5.<br>**No**<br>Refer to the warranty policy and procedures manual if a module is suspect. |
| **P5:** | |
| | 1 |
| | Is interference still present?<br>**Yes**<br>Refer to the warranty policy and procedures manual if a module is suspect.<br>**No**<br>User to be advised of interference from aftermarket accessories. |

## PINPOINT TEST Q : UNABLE TO TRANSFER CALL BETWEEN HANDS FREE AND HANDSET

| TEST CONDITIONS | DETAILS/RESULTS/ACTIONS |
|---|---|
| **Q1:** | |
| | 1 |
| | Does the specific handset guide state that the handset does not support call transfer?<br>**Yes**<br>Advise user that some software levels are not guaranteed to function correctly. Software to be changed to approved level or the handset to be changed.<br>**No**<br>Switch off the handset, remove the battery from the back of the handset. Replace the battery into the handset and switch on. Make sure the Bluetooth link is reconnected and re-try the call.GO to Q2. |
| **Q2:** | |
| | 1 |

GETtheMANUALS.org

| | |
|---|---|
| | Can the call be transferred between hands free and handset?<br>**Yes**<br>Problem may have been caused by the Bluetooth link being disconnected.<br>**No**<br>Key off ignition for 6 minutes for the portable support electronics (PSE) module to shut down. Key on ignition and re-try the call.GO to Q3. |
| **Q3:** | |
| | 1 |
| | Can the call be transferred between hands free and handset?<br>**Yes**<br>Problem may have been caused by the Bluetooth link being disconnected.<br>**No**<br>Pair and connect a different known 'good' handset to the vehicle phone system and make an incoming call. GO to Q4. |
| **Q4:** | |
| | 1 |
| | Can the call be transferred between hands free and handset?<br>**Yes**<br>This is a handset issue, consult the handset supplier.<br>**No**<br>Refer to the warranty policy and procedures manual if a module is suspect. |

GETtheMANUALS.org

# Cellular Phone - Cellular Phone Antenna

Removal and Installation

## Removal

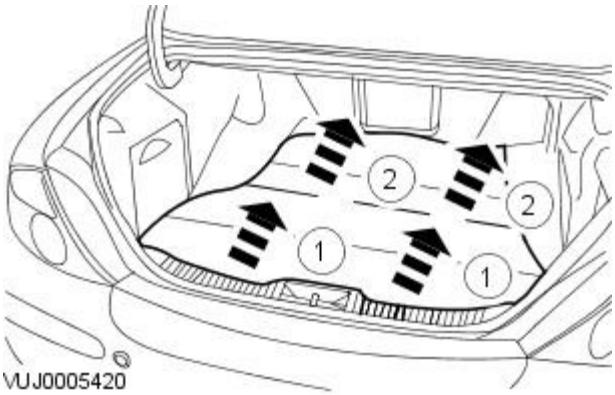


**1.** Reposition the luggage compartment floor covering.

1. Detach the luggage compartment floor covering.
2. Reposition the luggage compartment floor covering.

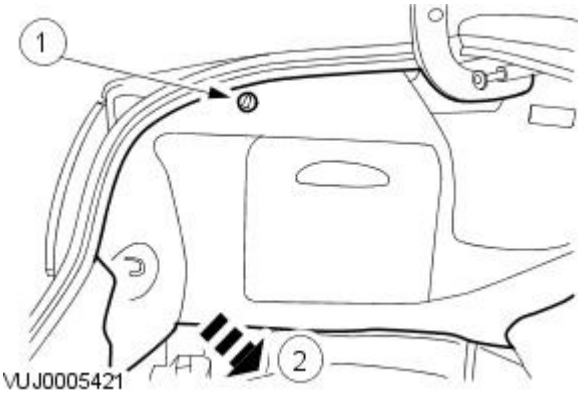


**2.** Detach the luggage compartment side trim panel.

1. Remove the luggage compartment side trim panel retaining clip.
2. Detach the luggage compartment side trim panel.

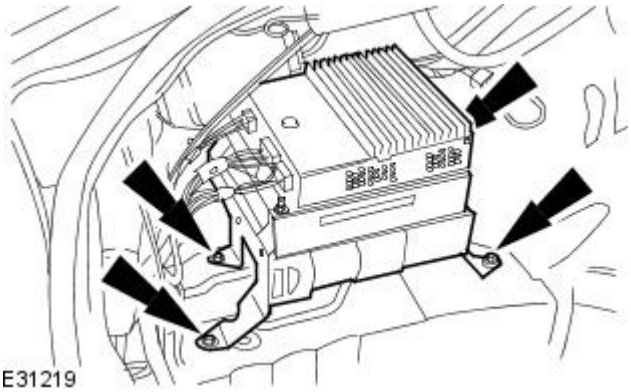


**3.** Detach the module mounting bracket.

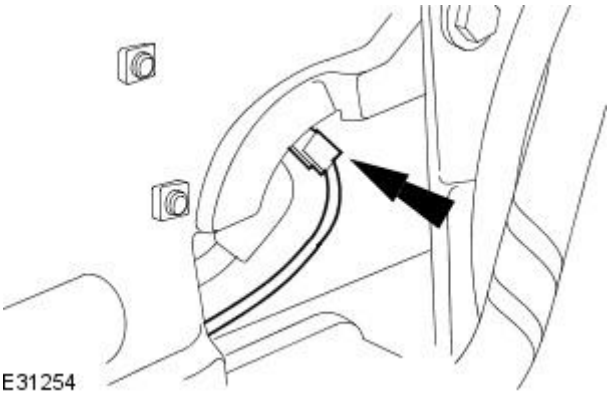


**4.** Disconnect the cellular phone antenna connector.

**5.** Remove the rear bumper cover.
For additional information, refer to Section 501-19 Bumpers.

GETtheMANUALS.org

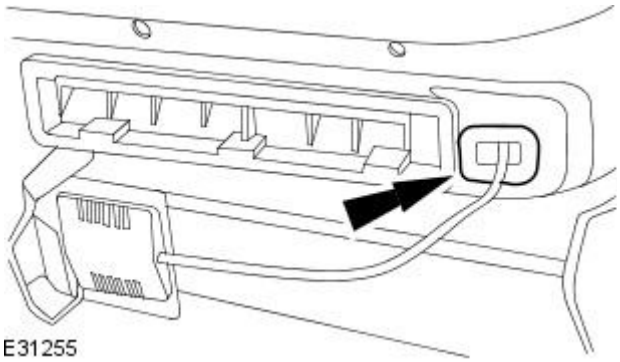


**6.** Detach the grommet.

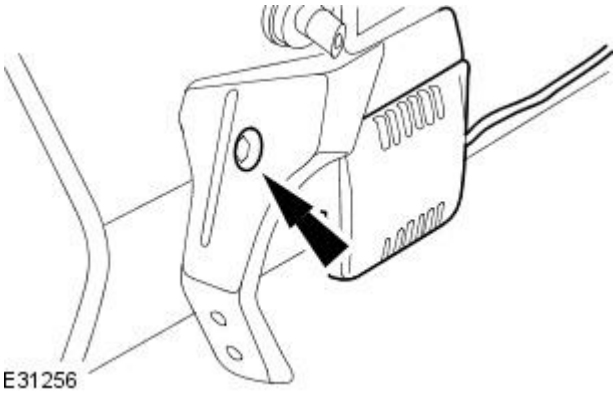


**7.** Remove the cellular phone antenna.

## Installation

**1.** To install, reverse the removal procedure.

GETtheMANUALS.org

# Multifunction Electronic Modules -

**Torque Specifications**

| Description | Nm | lb-ft | lb-in |
|---|---|---|---|
| Rear electronic module retaining bolts | 10 | 7 | 89 |
| Multifunction voice activated module retaining bolts | 10 | 7 | 89 |
| Front electronic module retaining bolts | 10 | 7 | 89 |

GETtheMANUALS.org

# Multifunction Electronic Modules - Module Controlled Functions

Description and Operation

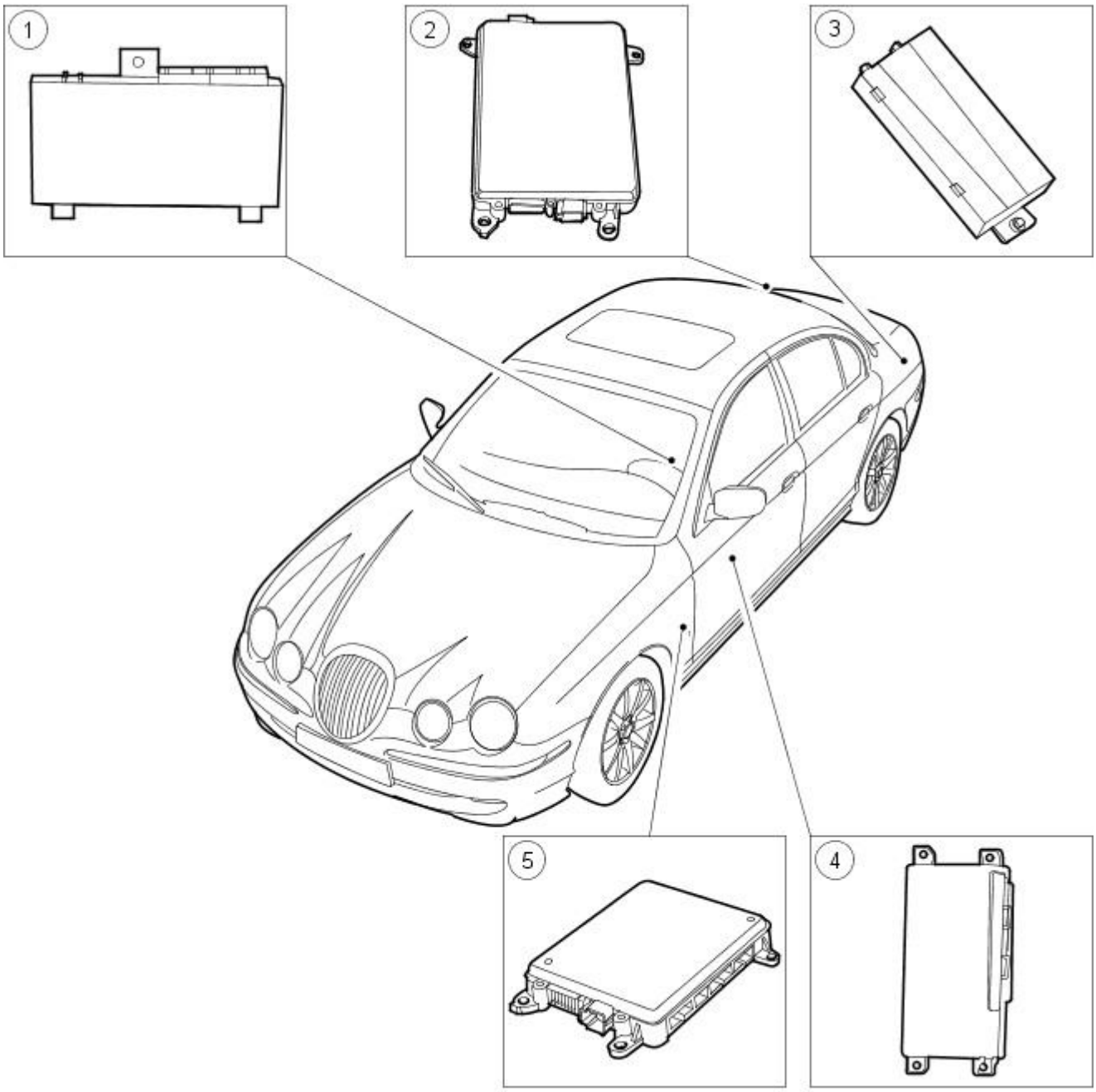


E30367

| Item | Part Number | Description |
|---|---|---|
| 1 | — | Driver seat module (DSM) |
| 2 | — | Rear electronics module (REM) |
| 3 | — | Multifunction voice activated module |
| 4 | — | Driver door module (DDM) |
| 5 | — | Front electronic module (FEM) |

## Driver Seat Module (DSM)

The DSM is located under the driver seat. The DSM controls the seat memory recall positions and seat functionality.
For additional information, refer to Section 501-10 Seating.

## Driver Door Module (DDM)

The DDM is located in the driver door behind the trim panel.

The DDM is involved with the following operations:

- Door window motor and regulator
- Exterior rear view mirror movement
- Keyless entry
- Global closing
- Drivers door locking/unlocking

## Front Electronic Module (FEM)

The FEM module is located behind the driver side cowl side trim panel.

QETtheMANUALS.org

The FEM is involved with the following operations:

- Front exterior lighting
- Direction indicators
- Adjustable pedals
- Daytime running lamps
- Courtesy lighting
- Low brake fluid reservoir level
- Low windshield washer reservoir fluid level
- Low oil pressure
- Windshield wipers

## Rear Electronic Module (REM)

The REM module is located in the passenger side luggage compartment behind the luggage compartment side trim panel.

The REM module is involved with the following operations:

- Fuel pump
- Heated rear windshield
- Rear exterior lighting
- Rear view mirrors electrro chromic function
- Luggage compartment lid release
- Inertia fuel cut off switch
- Passenger door locks

## Multifunction Voice Control Module

The multifunction voice control module is located in the driver side luggage compartment behind the luggage compartment side trim panel. The multifunction voice activated module controls and processes all the voice commands given by the driver, then delivers this information to the audio unit, cellular phone, navigation and the climate control modules which then carry out these commands.

## Microphone

The microphone is used for the cellular phone and to receive voice commands for the audio unit and climate control functions. The microphone supplies the information to the multifunction voice control module which processes the commands and supplies the necessary information to the correct modules.

## Visual Feedback Message Center Display

This display keeps the driver informed of the function which is being selected or processed.

## Audible Feedback Instrument Cluster

This audible tone informs the driver when the system is able to receive commands for processing.

## Verbal Feedback Speakers

These speakers are utilized to confirm to the driver that his verbal command has been accepted and is being proceeded.

## Steering Wheel Controls VOICE/PHONE Buttons

This button is automatically configured by the audio unit depending on which systems are equipped on the vehicle. For additional information, refer to the Owner Guide.

GETtheMANUALS.org

# Multifunction Electronic Modules - Multifunction Electronic Module

Diagnosis and Testing

## Inspection and Verification

1. **1.** Verify the customer concern.
2. **2.** Visually inspect for obvious signs of electrical damage.

**Visual Inspection Chart**

| Electrical |
| --- |
| • Fuse(s)<br>• Electrical connector(s)<br>• Wiring Harness |

3. **3.** If an obvious cause for an observed or reported concern is found, correct the cause (if possible) before proceeding to the next step.
4. **4.** If the cause is not visually evident, verify the symptom and refer to the Jaguar Approved Diagnostic System.

GETtheMANUALS.org

# Multifunction Electronic Modules - Driver Door Module (DDM)

Removal and Installation

## Removal

**1.** CAUTIONS:

Prior to removal of the module, it is necessary to upload module configuration information to the Jaguar approved diagnostic system. This information needs to be downloaded into the new module once installed. For additional information, refer to Section 418-01 Module Configuration.

Electronic modules are sensitive to static electrical charges. If exposed to these charges, damage may result.

Disconnect the battery ground cable.
For additional information, refer to Section 414-01 Battery, Mounting and Cables.

**2.** Remove the front door trim panel.
For additional information, refer to Section 501-05 Interior Trim and Ornamentation.

**3.** Disconnect the driver door module (DDM) electrical connectors.

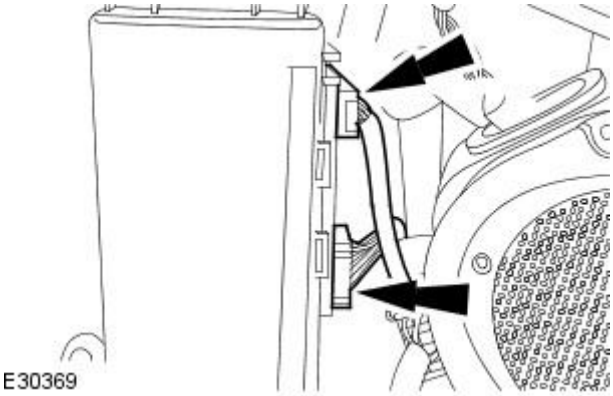


**4.** Remove the DDM.

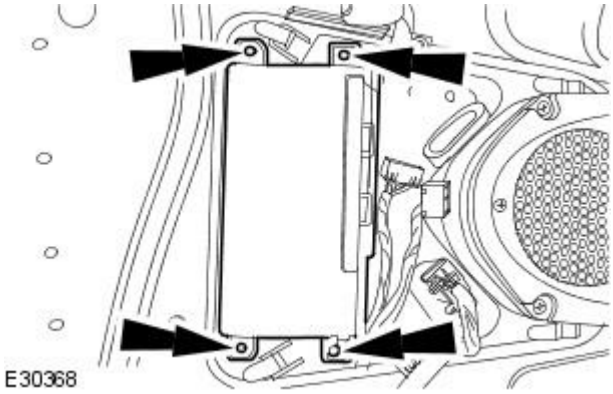


## Installation

**1.** To install, reverse the removal procedure.

GETtheMANUALS.org

# Multifunction Electronic Modules - Driver Seat Module (DSM)

Removal and Installation

## Removal

CAUTION: Electronic modules are sensitive to static electrical charges. If exposed to these charges, damage may result.

1. Remove the front seat.
   For additional information, refer to Section 501-10 Seating.
2. Disconnect the electrical connectors.

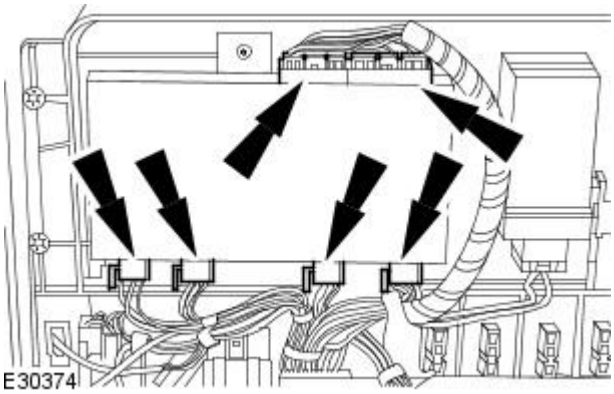


3. Remove the driver seat module (DSM).
   - Release the DSM retaining tang

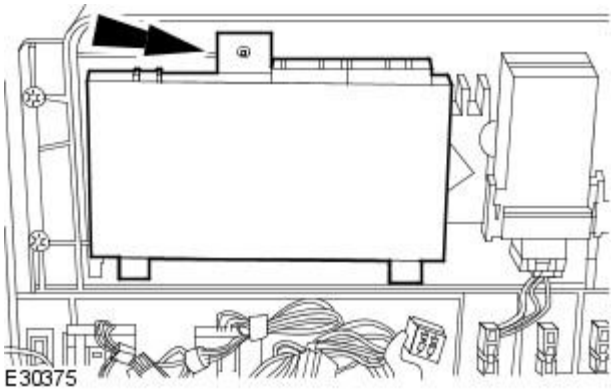


## Installation

1. To install, reverse the removal procedure.

GETtheMANUALS.org

# Multifunction Electronic Modules - Front Electronic Module (FEM)

Removal and Installation

## Removal

**1.** CAUTIONS:

Prior to removal of the module, it is necessary to upload module configuration information to the Jaguar approved diagnostic system. This information needs to be downloaded into the new module once installed. For additional information, refer to Section 418-01 Module Configuration.

Electronic modules are sensitive to static electrical charges. If exposed to these charges, damage may result.

Disconnect the battery ground cable.
For additional information, refer to Section 414-01 Battery, Mounting and Cables.

**2.** Remove the left-hand side trim panel.
For additional information, refer to Section 501-05 Interior Trim and Ornamentation.

**3.** Reposition the floor covering.

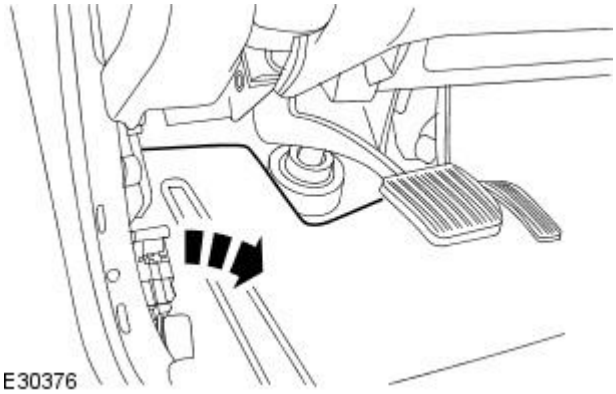


**4.** Disconnect the electrical connectors.

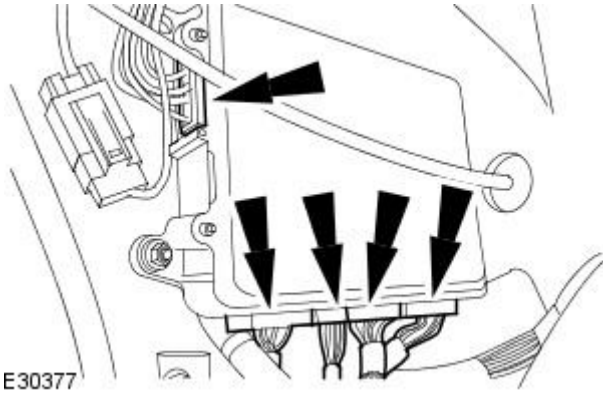


**5.** Remove the front electronic module (FEM).

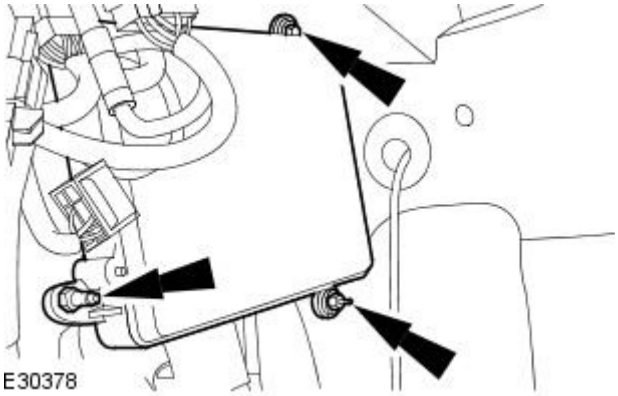


## Installation

GETtheMANUALS.org

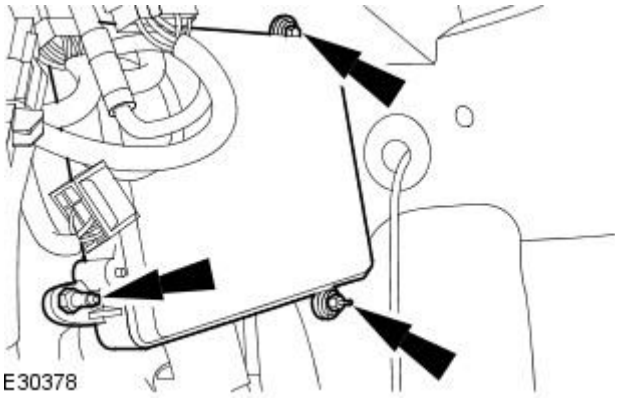


**1.** To install, reverse the removal procedure.

- Tighten to 10 Nm.

GETtheMANUALS.org

# Multifunction Electronic Modules - Multifunction Voice Activated Module

Removal and Installation

## Removal

**1.** CAUTIONS:

Prior to removal of the module, it is necessary to upload module configuration information to the Jaguar approved diagnostic system. This information needs to be downloaded into the new module once installed. For additional information, refer to Section 418-01 Module Configuration.

Electronic modules are sensitive to static electrical charges. If exposed to these charges, damage may result.

Disconnect the battery ground cable.
For additional information, refer to Section 414-01 Battery, Mounting and Cables.

**2.** Detach the luggage compartment side trim panel.

1. Remove the luggage compartment side trim panel retaining clip.
2. Detach the luggage compartment side trim panel.

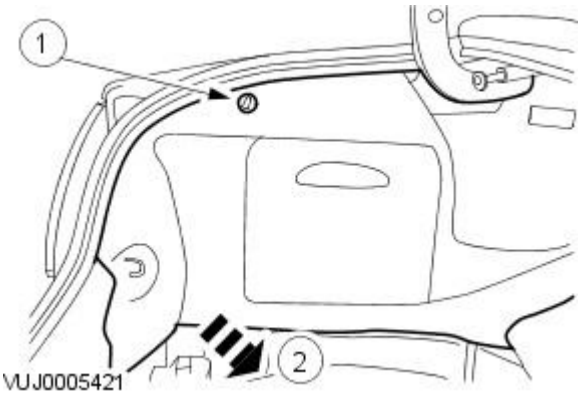


**3.** Disconnect the electrical connectors.

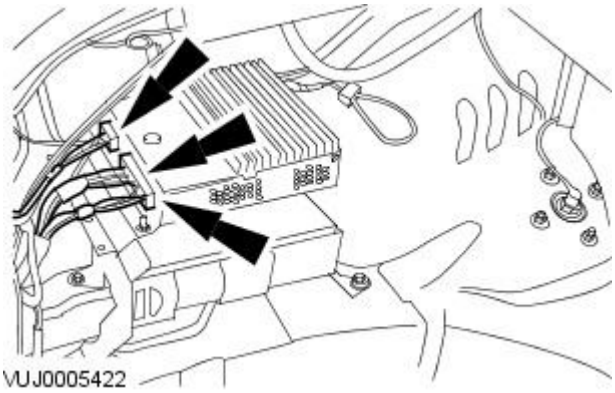


**4.** Detach the module mounting bracket.

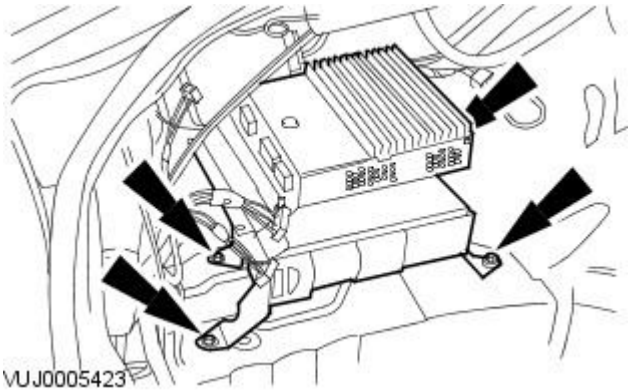


GETtheMANUALS.org

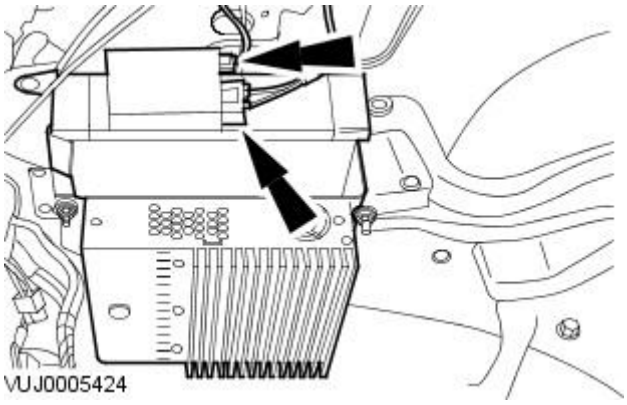


**5.** Remove the module mounting bracket.

- Disconnect the electrical connectors.

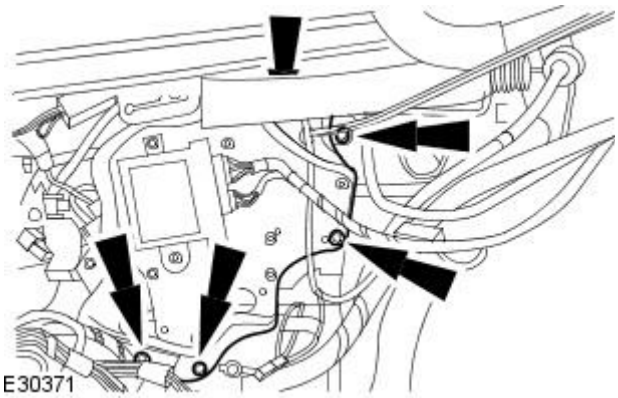


**6.** Detach the multifunction voice control module mounting bracket.

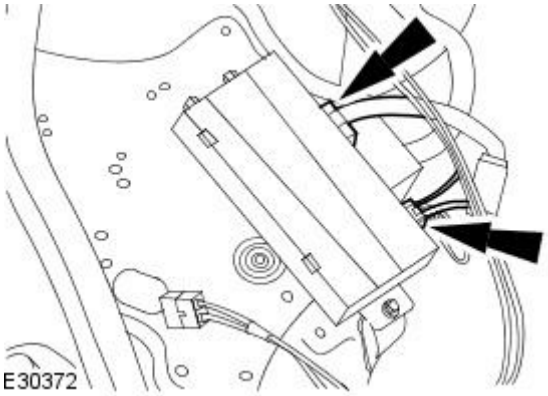


**7.** Remove the electrical connectors.

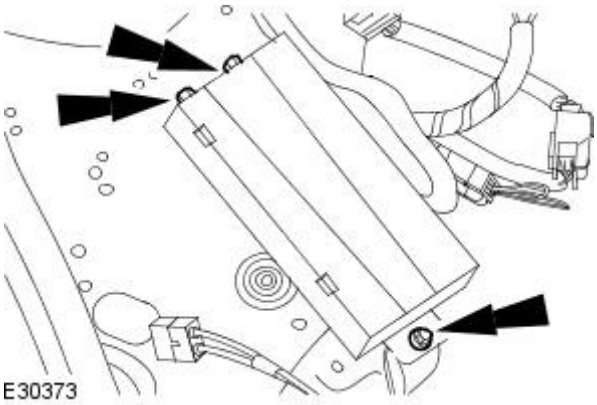


**8.** Remove the multifunction voice module.

## Installation

GETtheMANUALS.org

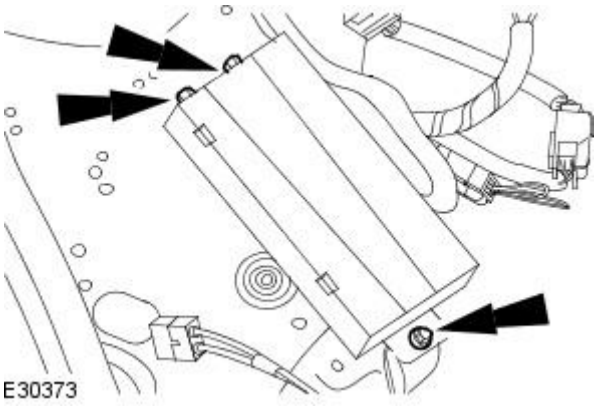


**1.** To install, reverse the removal procedure.

- Tighten to 10 Nm.

GETtheMANUALS.org

# Multifunction Electronic Modules - Rear Electronic Module (REM)

Removal and Installation

## Removal

**1.** CAUTIONS:

Prior to removal of the module, it is necessary to upload module configuration information to the Jaguar approved diagnostic system. This information needs to be downloaded into the new module once installed. For additional information, refer to Section 418-01 Module Configuration.

Electronic modules are sensitive to static electrical charges. If exposed to these charges, damage may result.

Disconnect the battery ground cable.
For additional information, refer to Section 414-01 Battery, Mounting and Cables.

**2.** Detach the luggage compartment side trim panel.

1. Remove the luggage compartment side trim panel retaining clip.
2. Detach the luggage compartment side trim panel.

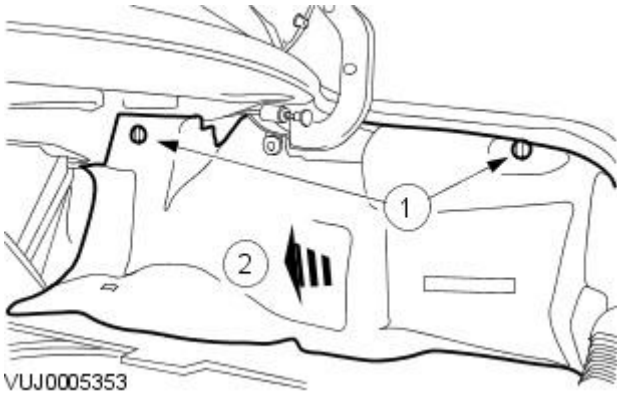


**3.** Detach the rear electronic module (REM) mounting bracket.

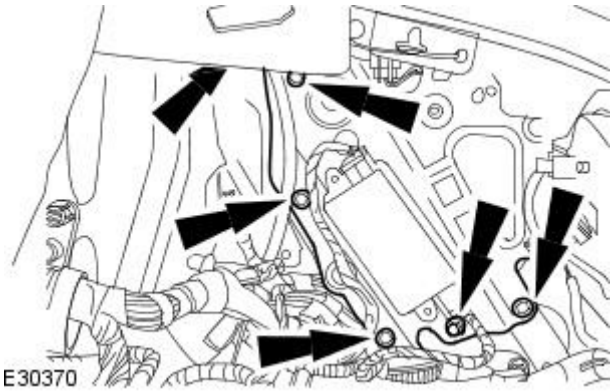


**4.** Disconnect the electrical connectors.

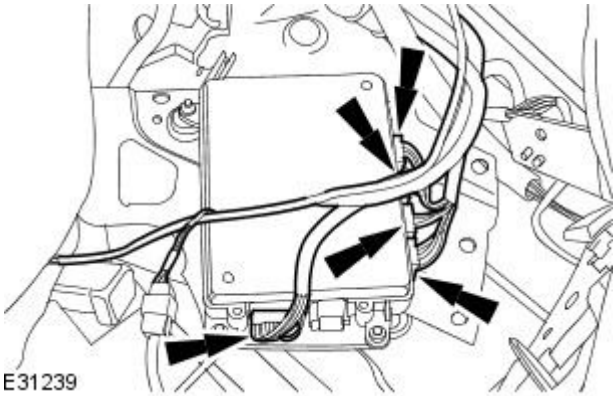


GETtheMANUALS.org

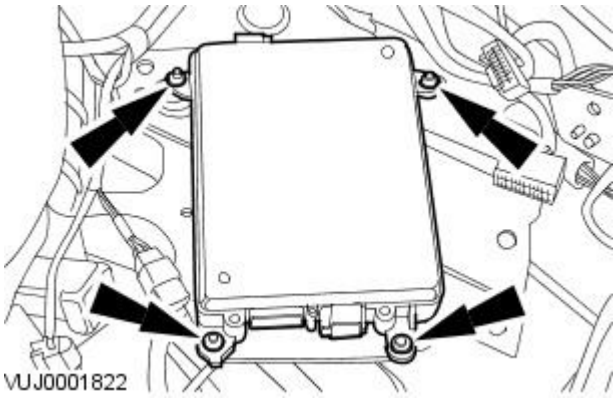


**5.** Remove the REM.

## Installation

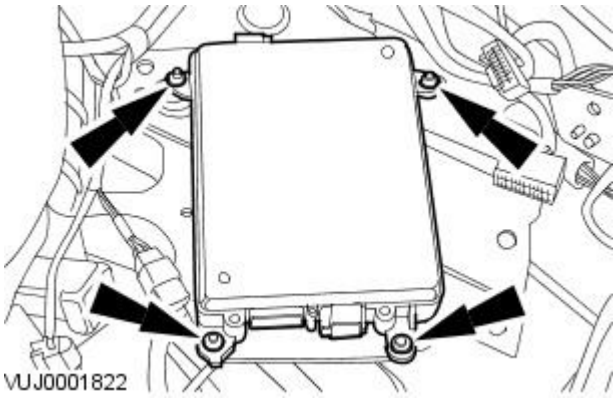


**1.** To install, reverse the removal procedure.

- Tighten to 10 Nm.

GETtheMANUALS.org

# Front End Body Panels - Front End Body Panels

Description and Operation

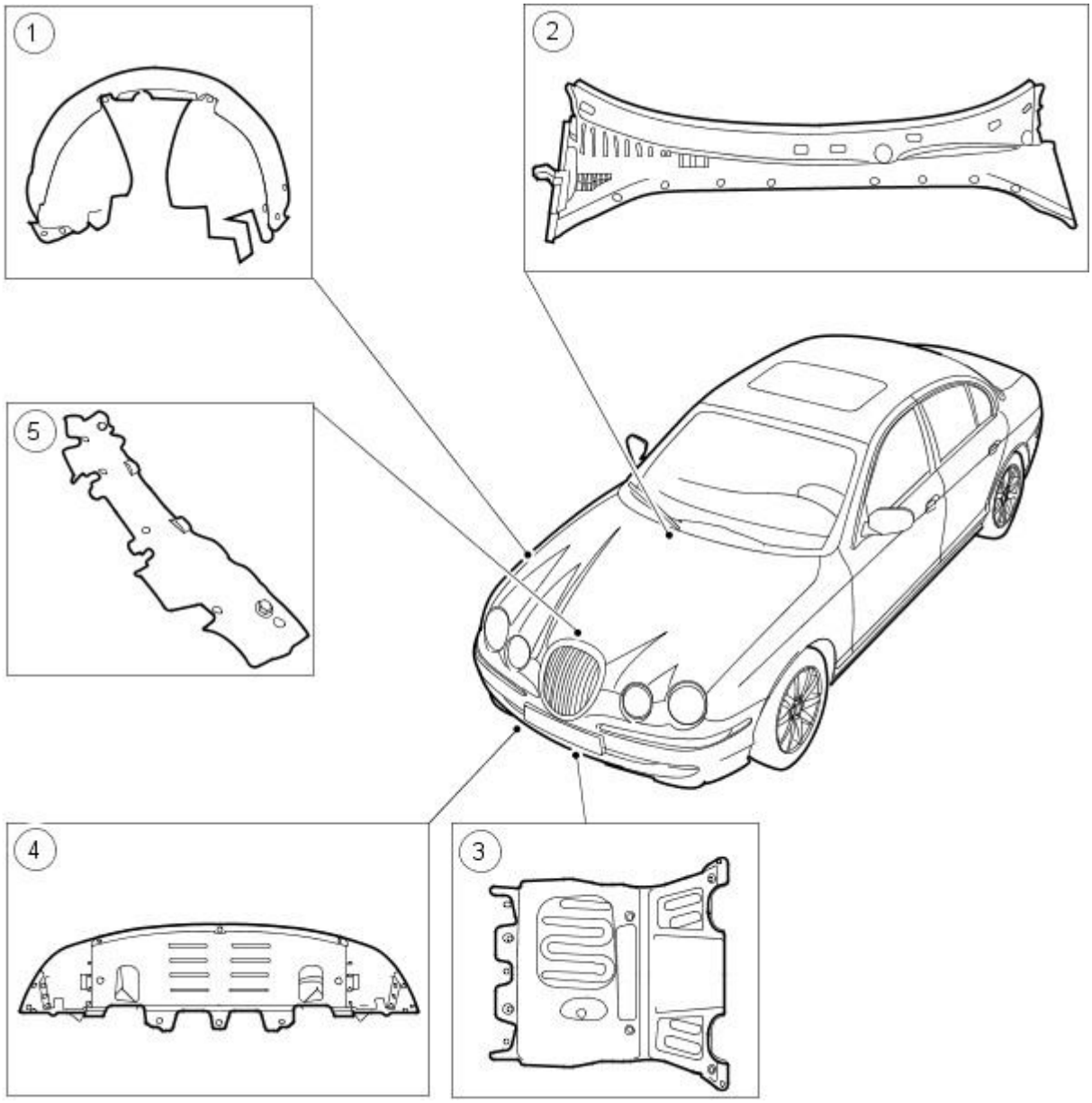


E30187

| Item | Part Number | Description |
|---|---|---|
| 1 | - | Fender splash shield |
| 2 | - | Cowl vent screen |
| 3 | - | Air deflector |
| 4 | - | Radiator splash shield |
| 5 | - | Radiator closing panel |

Fender Splash Shield

Protective injection moulded plastic liners are fitted to the inside of the fenders, these help prevent dirt and water ingress into the vehicle body.

Air Deflector

An air deflector is retained to the front subframe. The air deflector assists the flow of air under the vehicle, it also gives protection to the engine bay from dirt and water ingress. On top of the air deflector an acoustic pad is fitted which is covered by a heat shield, this is designed to reduce engine and road noise.

Radiator Splash Shield

The radiator splash shield is fitted to assist air flow through the cooling pack. It is retained to the bottom of the front bumper cover, both front fender splash shields, and to the front subframe.

Radiator Closing Panel

The radiator closing panel is fitted to the body by retaining clips and is easily removed to give access to the rear of the headlamps.

Cowl Vent Screen

An injection molded plastic cowl vent screen is retained to the bodywork by retaining clips and screws. The cowl vent screen allows easy access to the wiper components and the ventilation system odor filter.

GETtheMANUALS.org

# Front End Body Panels - Air Deflector

Removal and Installation

## Removal

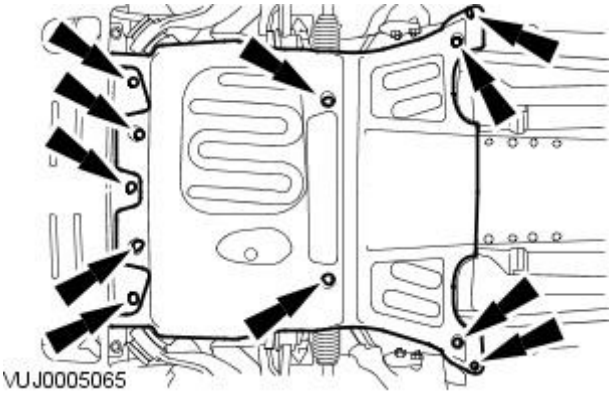


1. Raise and support the vehicle.
   For additional information, refer to Section 100-02 Jacking and Lifting.
2. Remove the air deflector.

## Installation

1. To install, reverse the removal procedure.

GETtheMANUALS.org

# Front End Body Panels - Cowl Panel Grille

Removal and Installation

## Removal

Vehicles built 02/2004 onwards

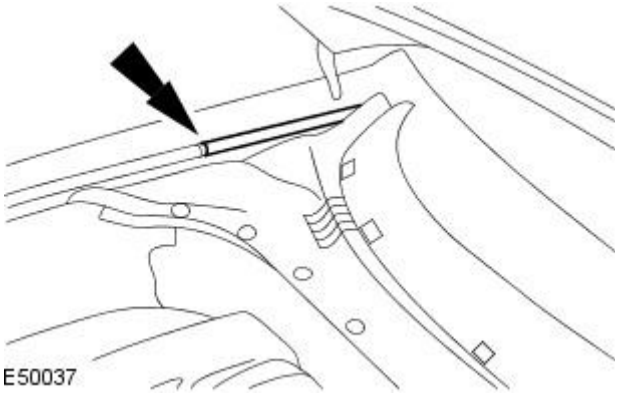


1. Detach the washer hose.

All vehicles

2. Remove both wiper pivot arms.
   For additional information, refer to: Wiper Pivot Arm - Vehicles Built Up To: 01/2004 (501-16 Wipers and Washers, Removal and Installation).
3. Remove the cowl panel grille retaining screw covers.

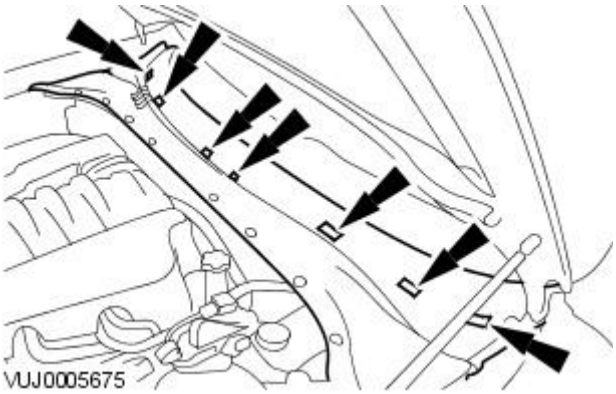


4. Remove the cowl panel grille.

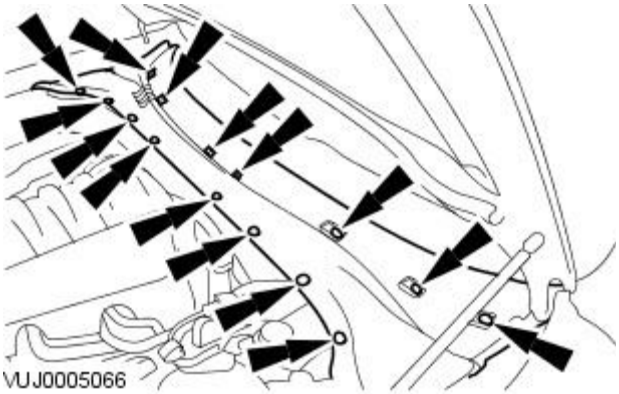


## Installation

1. To install, reverse the removal procedure.

GETtheMANUALS.org

# Front End Body Panels - Fender Splash Shield

Removal and Installation

## Removal

All vehicles

1. Remove the front wheel and tire assembly.
   For additional information, refer to: Wheel and Tire (204-04 Wheels and Tires, Removal and Installation).

Vehicles built up to 01/2004

2. Remove the fender splash shield.

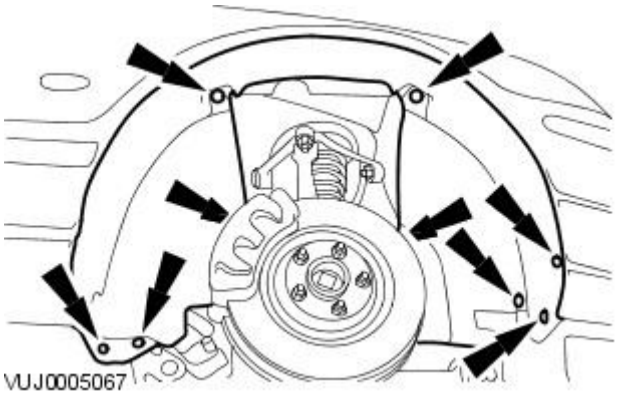


Vehicles built 02/2004 onwards

3. Remove the fender splash shield.

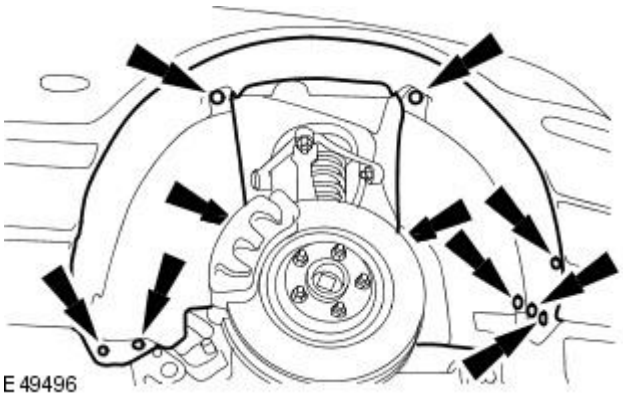


## Installation

1. To install, reverse the removal procedure.

GETtheMANUALS.org

# Front End Body Panels - Radiator Grille Opening Panel

Removal and Installation

## Removal

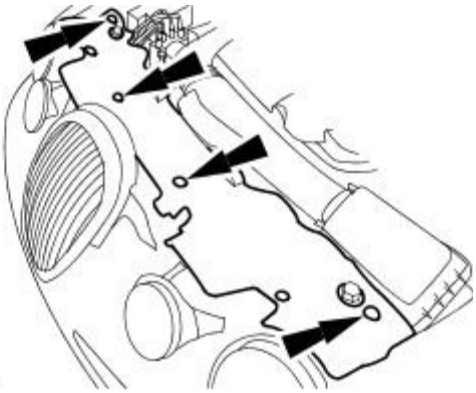


1. Remove the radiator grille opening panel.

## Installation

1. To install, reverse the removal procedure.

GETtheMANUALS.org

# Front End Body Panels - Radiator Splash Shield

Removal and Installation

## Removal

All vehicles

1. Raise and support the vehicle.
   For additional information, refer to: Lifting (100-02 Jacking and Lifting, Description and Operation).

Vehicles built up to 01/2004

2. Remove the radiator splash shield.

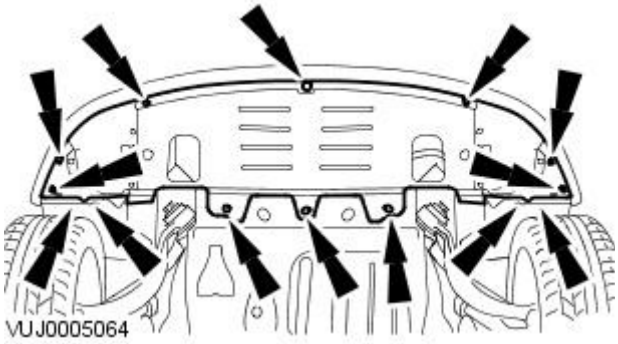


Vehicles built 02/2004 onwards

3. Remove the radiator splash shield.

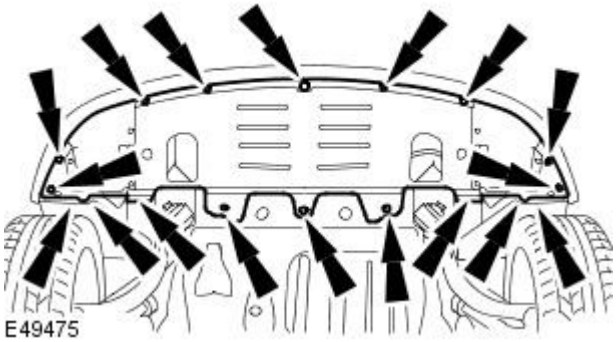


## Installation

1. To install, reverse the removal procedure.

GETtheMANUALS.org

# Body Closures -

**Torque Specifications**

| Description | Nm | lb-ft | lb-in |
|---|---|---|---|
| Front door hinge to body retaining bolts - Up to VIN M83221 | 30 | 22 | - |
| Front door hinge to body retaining bolts - From VIN M83222 | 35 | 26 | - |
| Rear door hinge to body retaining nuts | 35 | 26 | - |
| Door hinge to door retaining bolts | 30 | 22 | - |
| Door check arm to body retaining screws | 15 | 11 | - |
| Door check arm to door retaining nuts | 12 | 9 | - |
| Door striker retaining screws | 28 | 21 | - |
| Front safety belt retractor retaining bolt | 40 | 30 | - |
| Luggage compartment lid to hinge retaining bolts | 15 | 11 | - |
| Luggage compartment lid to body retaining bolts | 15 | 11 | - |
| Luggage compartment lid striker retaining bolts | 9 | - | 80 |
| Hood latch retaining bolts | 11 | 8 | - |
| Hood to hinge retaining bolts | 25 | 18 | - |
| Hood hinge to body retaining bolts | 25 | 18 | - |

GETtheMANUALS.org

# Body Closures - Body Closures

Description and Operation

## Doors

All doors comprise of an inner and outer panel, clinched and bonded together to form a door assembly. Both panels incorporate extensions spot welded together to form a cheater assembly and a sealant is applied in cosmetic bead form to all clinch.

The doors are conventional latch to striker plate design with the strikers located on the body pillars.

A joint-less single profile bulb seal is installed on each door together with a water shedder and separate vacuum formed speaker cup. Upper and lower door hinges and multi-stage check arms require no lubrication throughout the vehicle life.

## Luggage Compartment Lid

The luggage compartment lid comprises of an inner and outer panel clinched and bonded together to form a complete assembly.

The luggage compartment lid is a conventional lock to striker plate design with the striker located centrally on the edge of the load space floor.

## Hood

The hood assembly consists of a one piece inner and outer panel, clinched and bonded together with a bead of sealant applied to each clinch joint. The hood opens from the front and is secured by two hood latches and a secondary safety catch.

GETtheMANUALS.org

# Body Closures - Hood Alignment

General Procedures

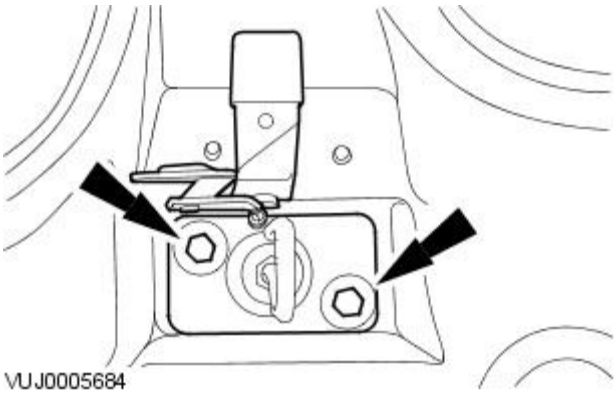


**1.** NOTE: Left-hand shown, right-hand similar.

Remove both hood latches.

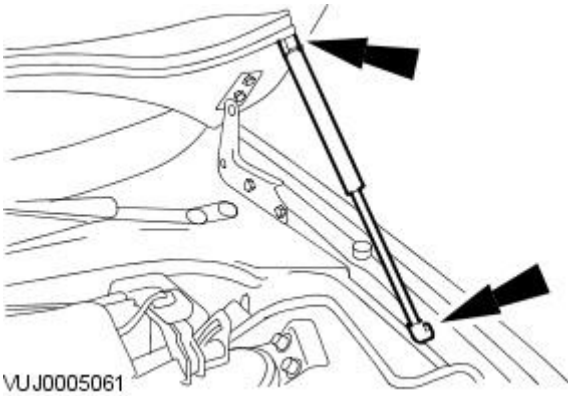


**2.** NOTE: Left-hand shown, right-hand similar.

Remove both hood struts.

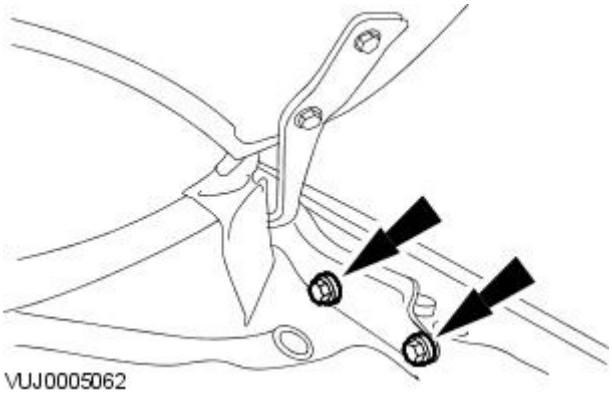


**3.** NOTE: Left-hand shown, right-hand similar.

Loosen both hood hinge retaining bolts.

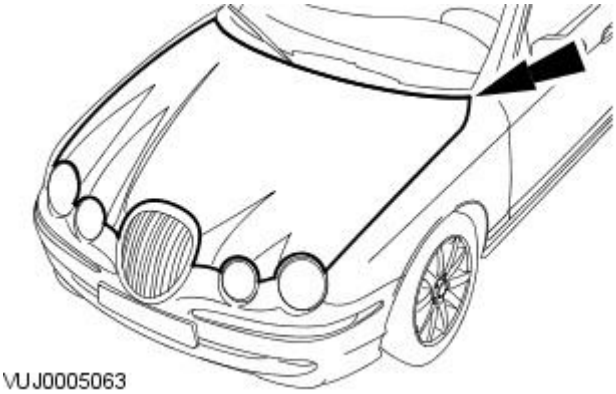


**4.** Pull up/push down on the hood.

**5.** NOTE: Make sure the spacing between the grille to hood, headlamps to hood and fenders to hood are equal.

Set the alignment to nominal.

GETtheMANUALS.org

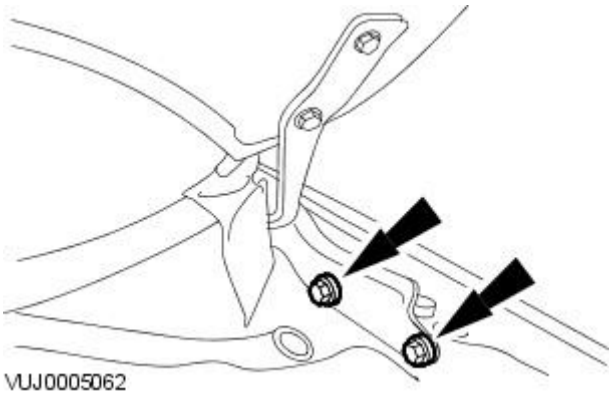


**6.** Tighten the hood hinge retaining bolts.

- Tighten to 25 Nm.

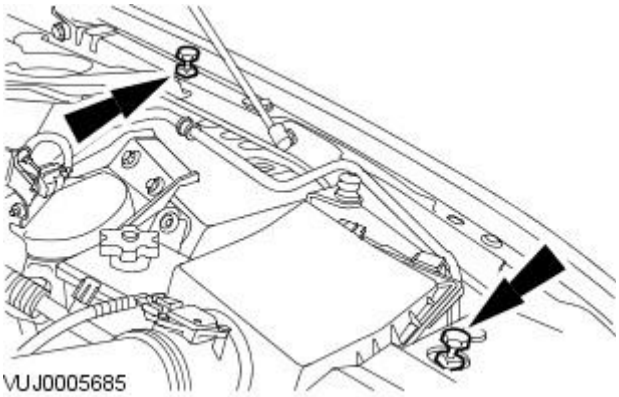


**7.** NOTE: Left-hand shown, right-hand similar.

Adjust the hood bump stops to obtain the correct profile between the hood and fender.

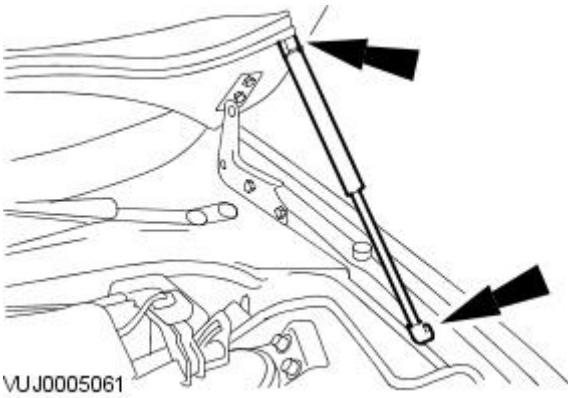


**8.** Install the hood struts.

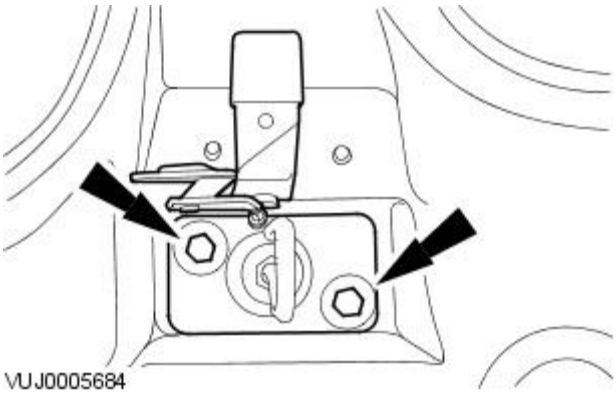


**9.** Install the hood latches.

- Tighten to 11 Nm.

GETtheMANUALS.org

# Body Closures - Luggage Compartment Lid Alignment

General Procedures

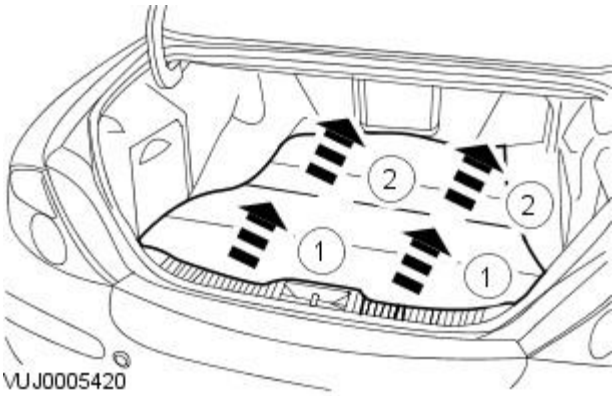


**1.** Reposition the luggage compartment floor covering.

1. Detach the luggage compartment floor covering.
2. Reposition the luggage compartment floor covering.

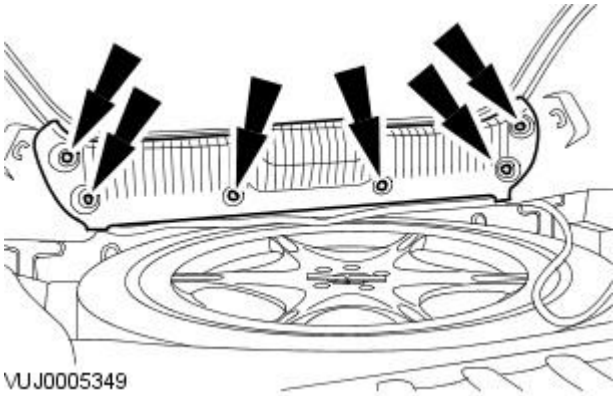


**2.** Remove the luggage compartment trim panel.

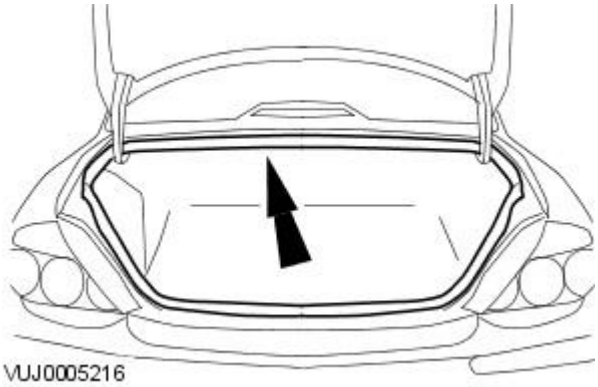


**3.** Remove the luggage compartment aperture seal.

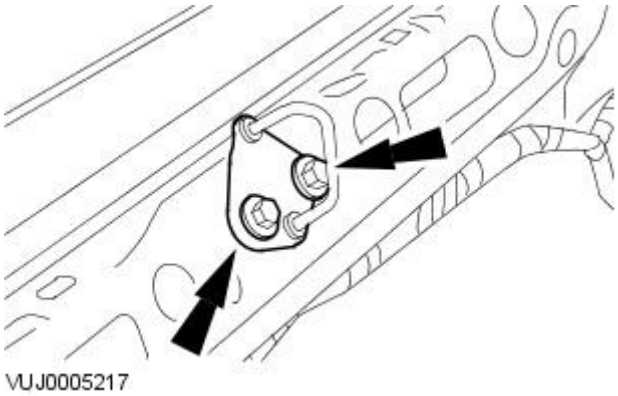


**4.** Remove the luggage compartment lid striker.

GETtheMANUALS.org

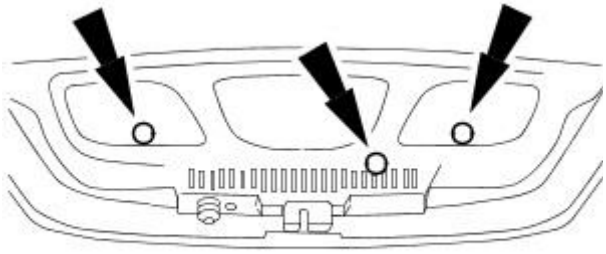

VUJ0005218

**5.** Remove the luggage compartment lid latch trim panel retaining screw covers.

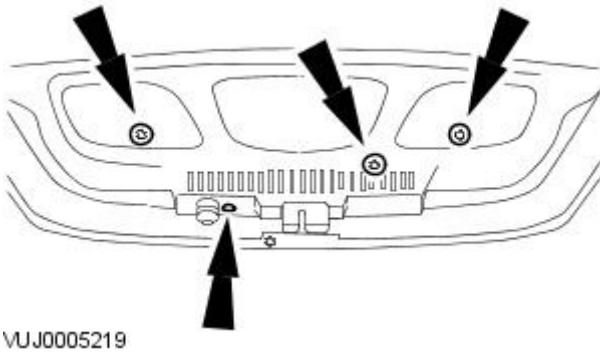

VUJ0005219

**6.** Detach the luggage compartment lid latch trim panel.

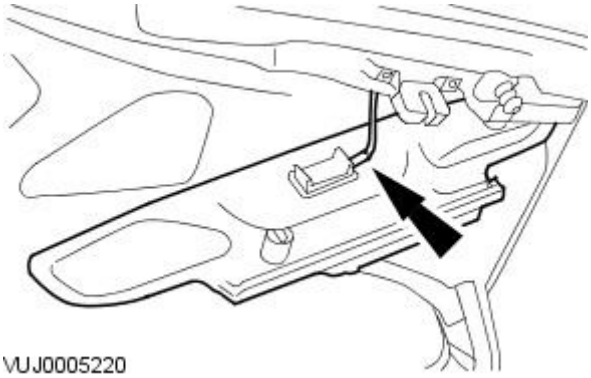

VUJ0005220

**7.** Remove the luggage compartment lid latch trim panel.

- Disconnect the luggage compartment lamp electrical connector.

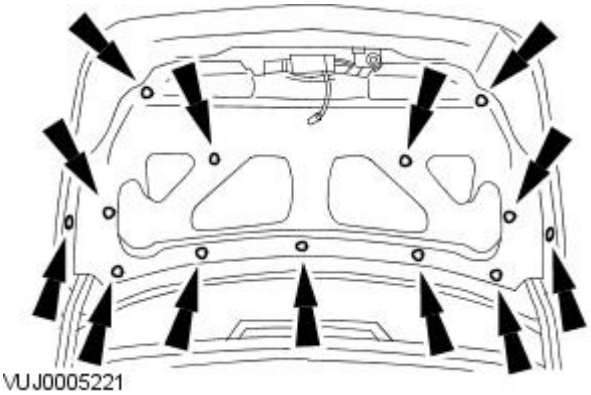

VUJ0005221

**8.** Remove the luggage compartment lid liner.

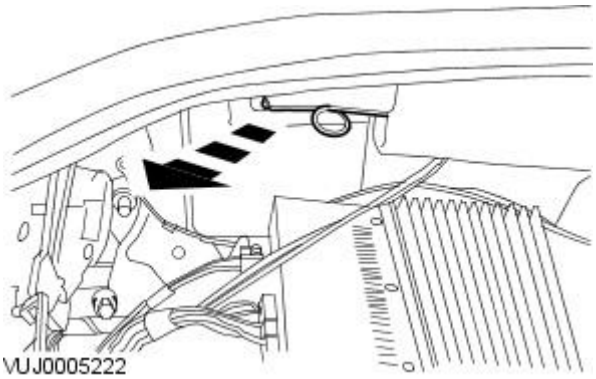

VUJ0005222

**9.** NOTE: Left-hand shown, right-hand similar.

Detach both luggage compartment lid springs.

GETtheMANUALS.org

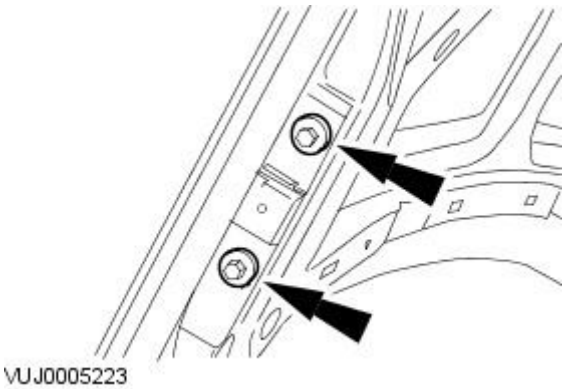


**10.** NOTE: Left-hand shown, right-hand similar.

Loosen the luggage compartment lid hinge bolts.

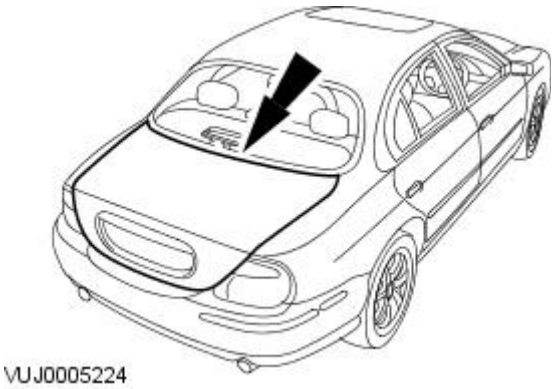


**11.** Pull up/push down on the luggage compartment lid.

**12.** NOTE: Set the alignment to 1.5 mm (0.06 in) lower and 3 mm (0.12 in) forward of nominal.

Set the luggage compartment lid alignment.

**13.** Tighten the luggage compartment lid hinge bolts.

- Tighten to 15 Nm.

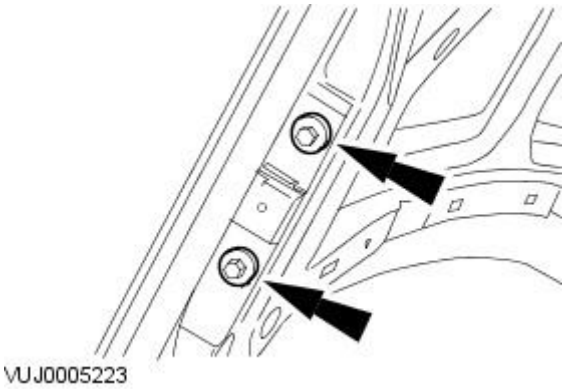


**14.** Attach both luggage compartment lid springs.

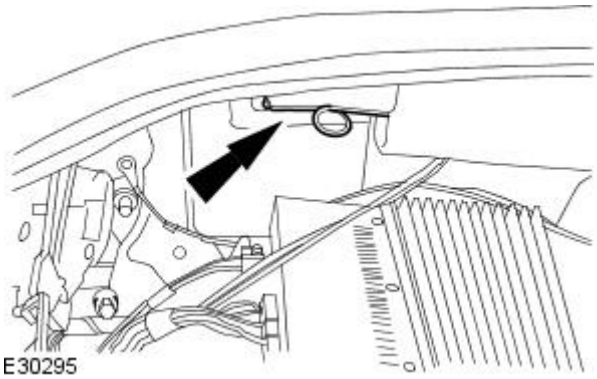


GETtheMANUALS.org

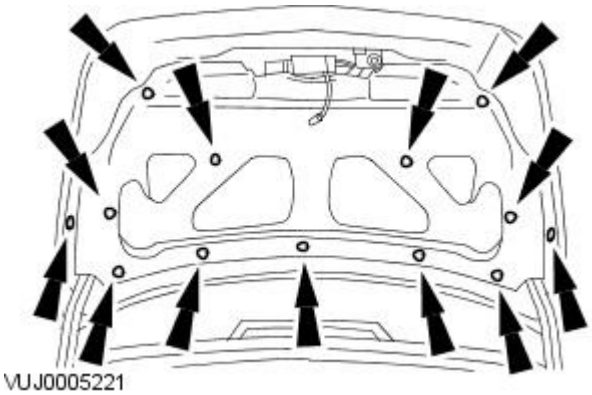
VUJ0005221

**15.** Install the luggage compartment lid liner.

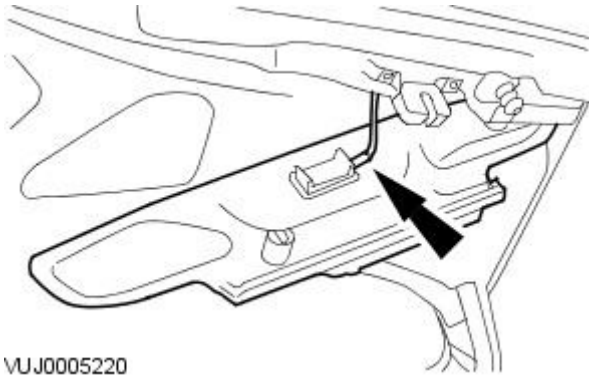
VUJ0005220

**16.** Install the luggage compartment lid latch trim panel.

- Connect the luggage compartment lamp electrical connector.

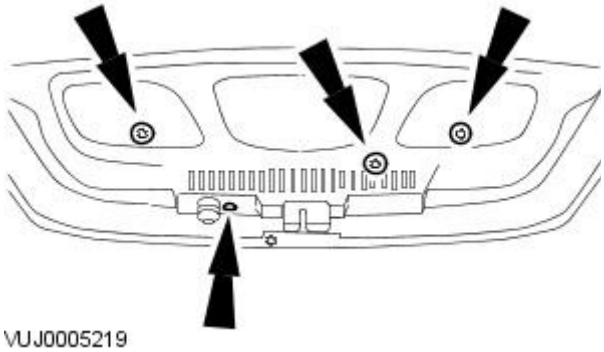
VUJ0005219

**17.** Attach the luggage compartment lid latch trim panel.

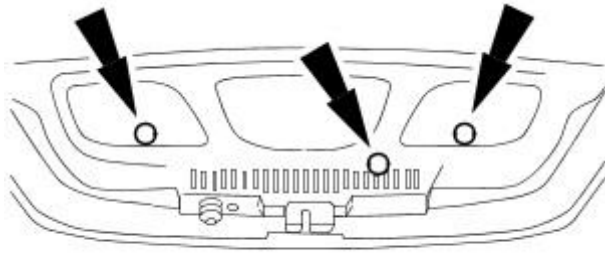
VUJ0005218

**18.** Install the luggage compartment lid latch trim panel retaining screw covers.

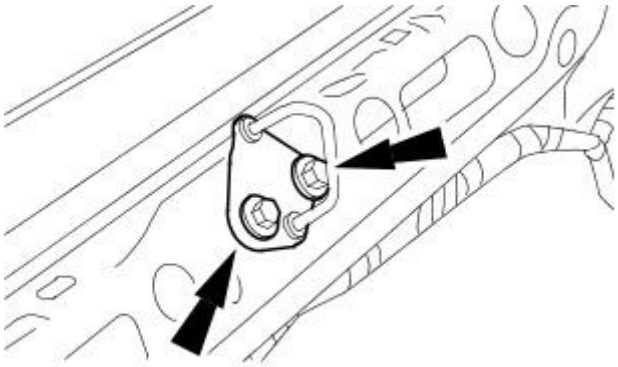
VUJ0005217

**19.** Install the luggage compartment lid striker.

- Tighten to 9 Nm.

GETtheMANUALS.org

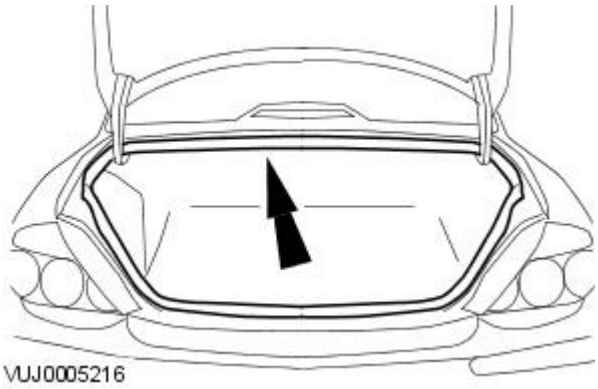


**20.** Install the luggage compartment aperture seal.

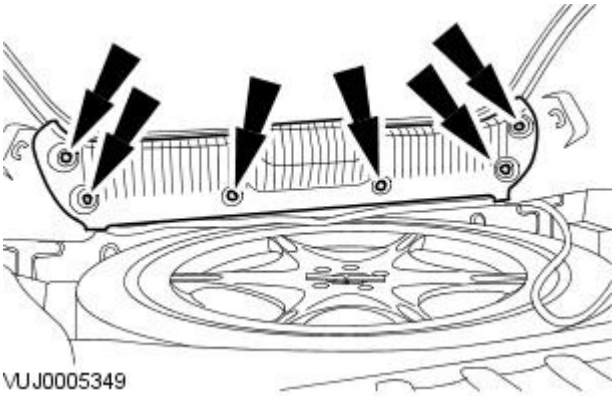


**21.** Install the luggage compartment trim panel.

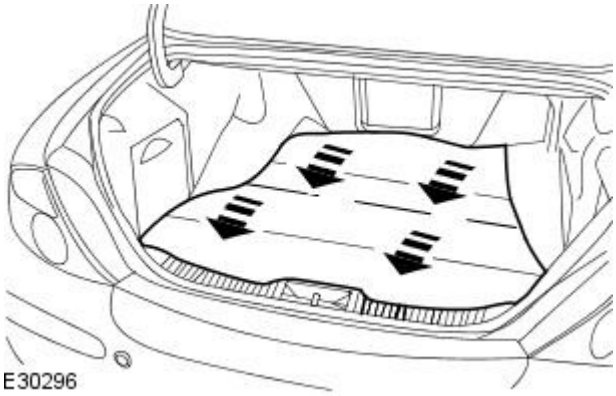


**22.** Reposition the luggage compartment floor covering.

GETtheMANUALS.org

# Body Closures - Rear Door Alignment

General Procedures

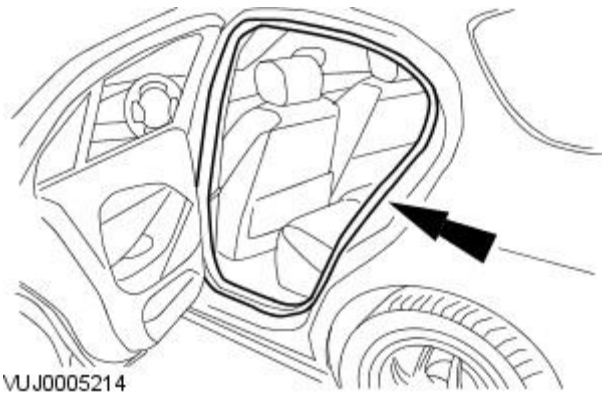


**1.** Remove the rear door aperture seal.

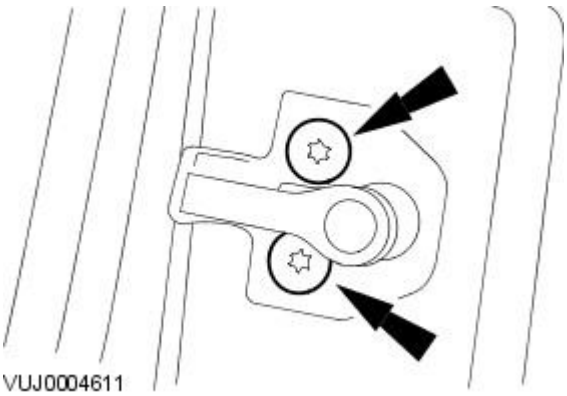


**2.** Remove the rear door striker.

**3.** Remove the B-pillar lower trim panel.
For additional information, refer to Section 501-05 Interior Trim and Ornamentation.

**4.** Detach the front safety belt retractor.

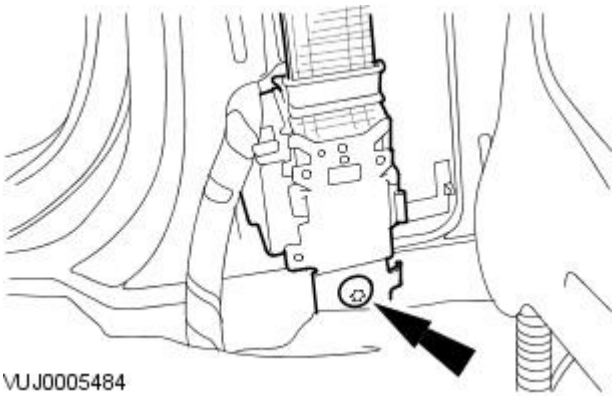


GETtheMANUALS.org

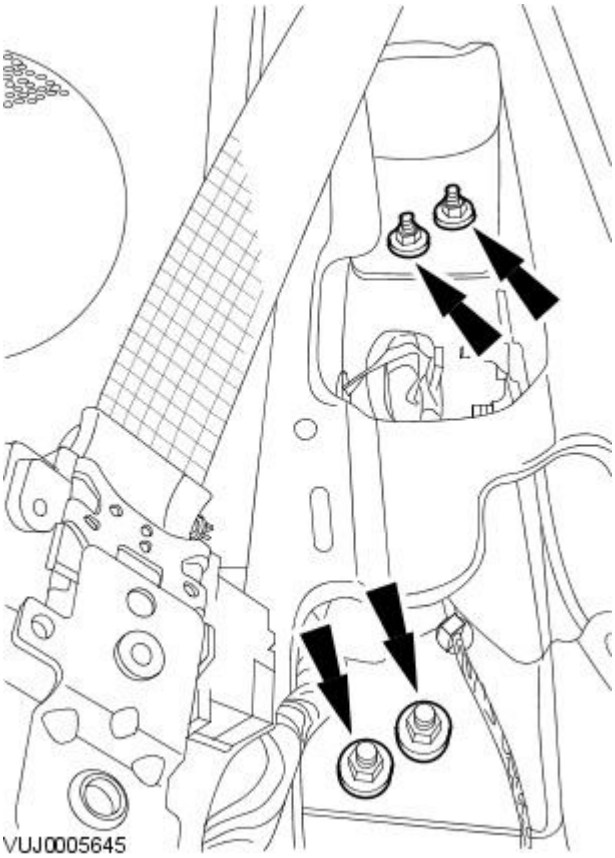


**5.** Loosen the rear door upper and lower hinge retaining nuts.

**6.** NOTE: Initial door fitting for the rear door should be set to 1 mm (0.04 in) higher than nominal at the rear, top edge of the door.

Set the rear door to the correct alignment.

**7.** Tighten the rear door upper and lower hinge retaining nuts.

- Tighten to 35 Nm.

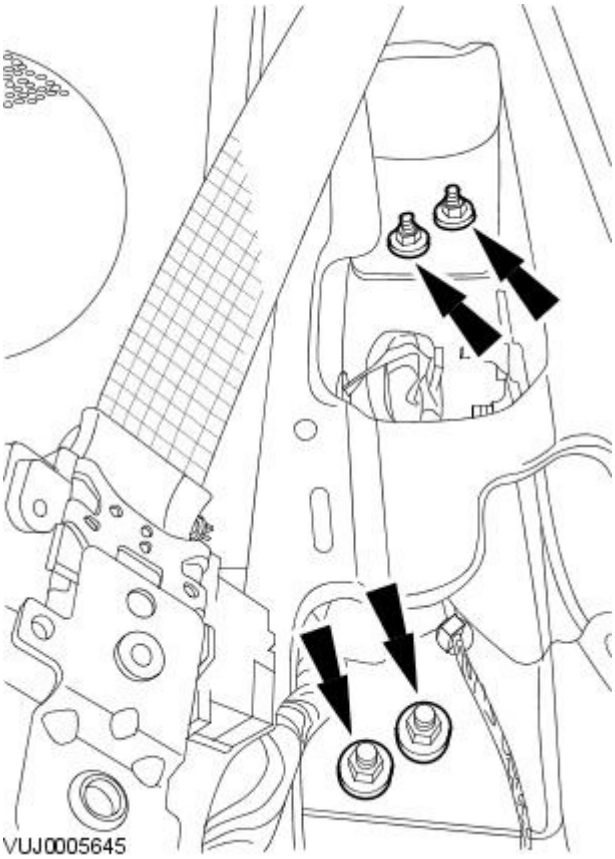


GETtheMANUALS.org

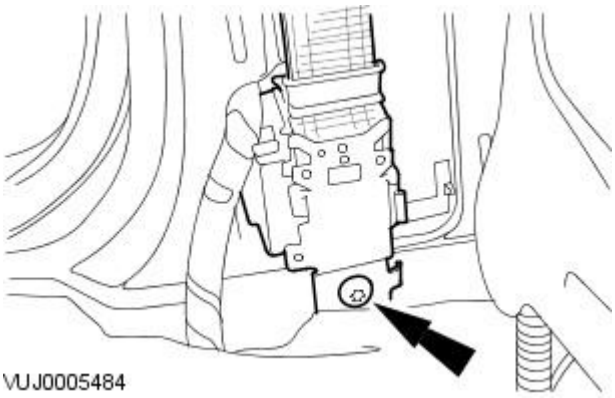


**8.** Attach the front safety belt retractor.

- Tighten to 40 Nm.

**9.** Install the B-pillar lower trim panel.
For additional information, refer to Section 501-05 Interior Trim and Ornamentation.

**10.** Install the rear door striker.

- Tighten to 28 Nm.

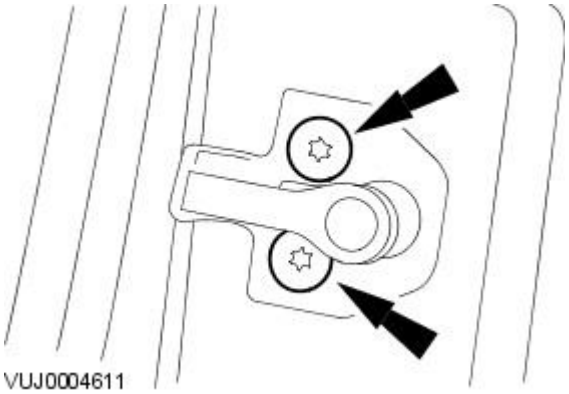


**11.** Install the rear door aperture seal.

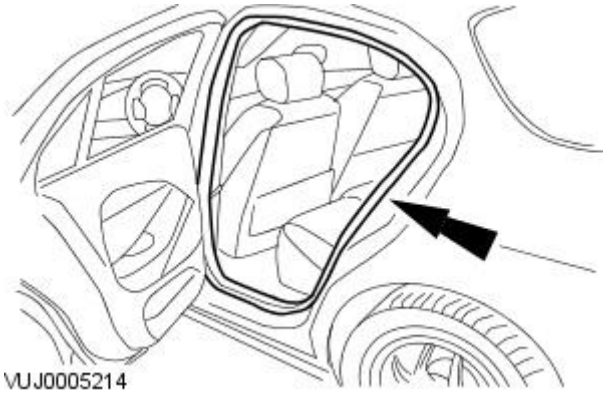


GETtheMANUALS.org

# Body Closures - Front Door Opening Weatherstrip

Removal and Installation

## Removal

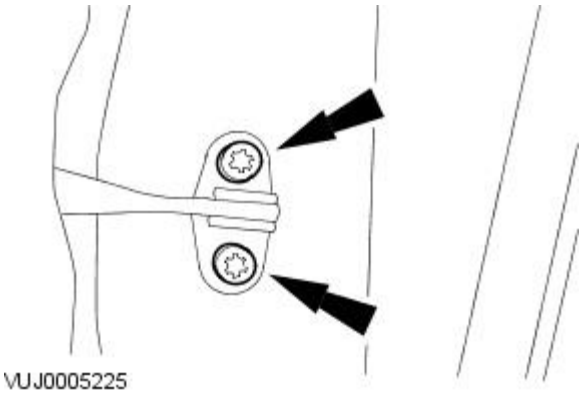


**1.** NOTE: Front door shown, rear door similar.

Detach the door check arm.

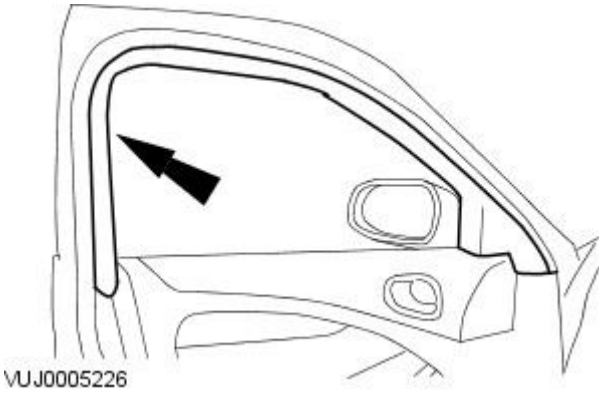


**2.** Remove the window frame interior trim.

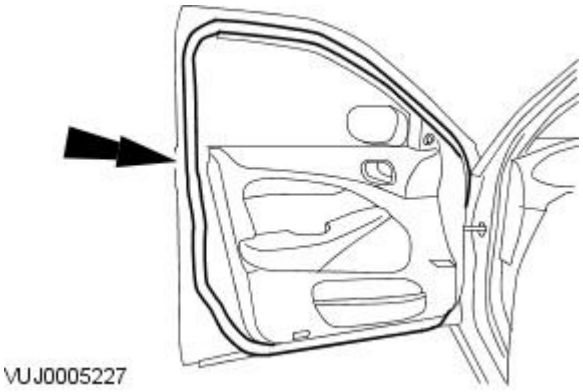


**3.** Remove the weatherstrip.

## Installation

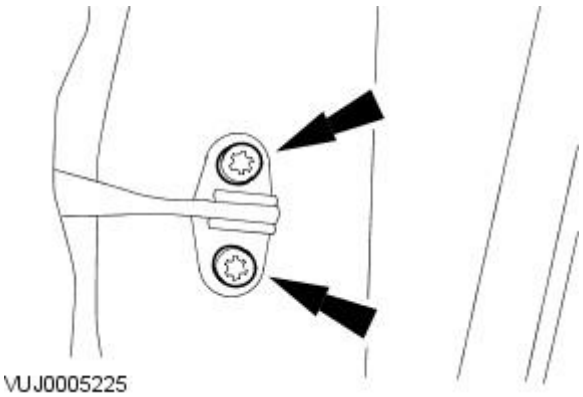


**1.** To install, reverse the removal procedure.

- Tighten to 15 Nm.

GETtheMANUALS.org

# Body Closures - Hood

Removal and Installation

## Removal

Vehicles built up to 01/2004

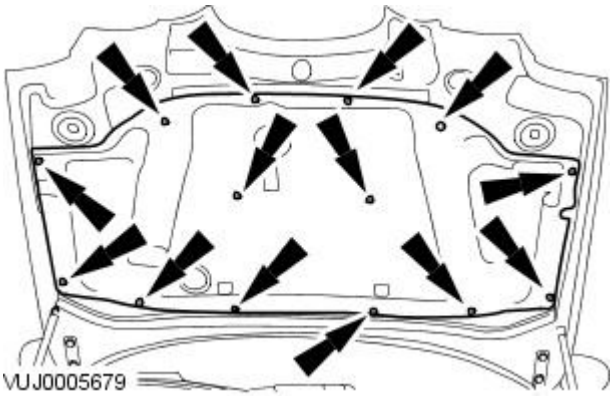


**1.** Remove the hood insulation.

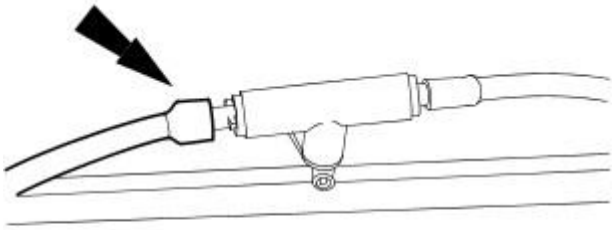


**2.** Detach the windshield washer supply hose.

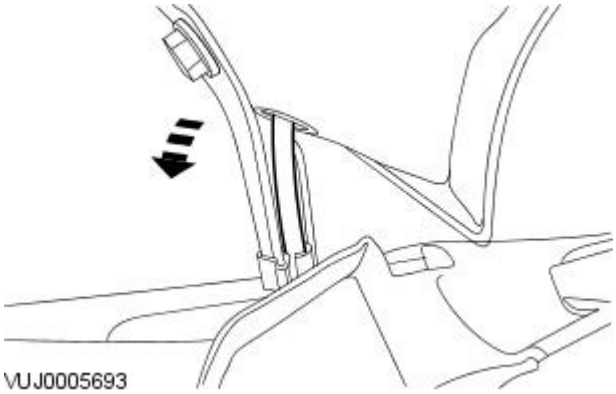


**3.** Guide the windshield washer supply hose through the hood aperture.

All vehicles

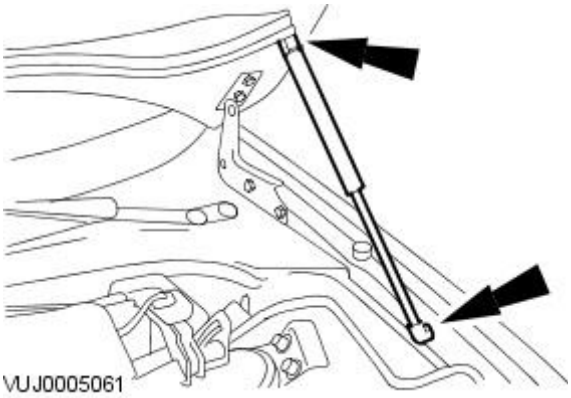


**4.** NOTE: Left-hand shown, right-hand similar.

Remove both hood struts.

GETtheMANUALS.org

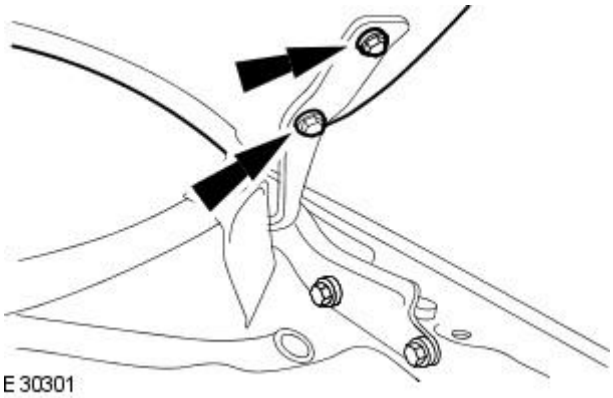


**5.** CAUTION: Make sure the hood does not contact the vehicle body while removing. Failure to carry out these instructions may cause damage to the vehicle.

• NOTE: Left-hand shown, right-hand similar.

Remove the hood.

- Remove the hood retaining bolts.

## Installation

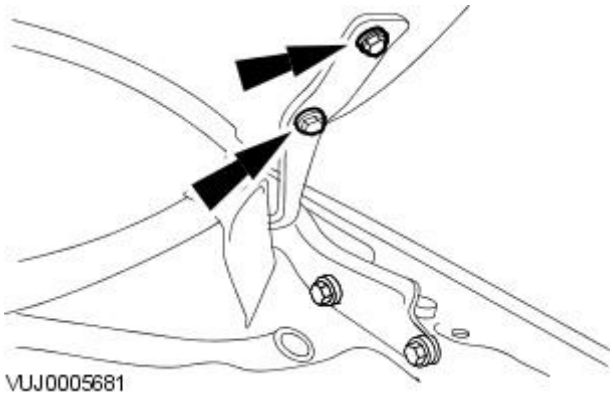


**1.** To install, reverse the removal procedure.

- Tighten to 25 Nm.

**2.** Align the hood.
For additional information, refer to: Hood Alignment (501-03 Body Closures, General Procedures).

GETtheMANUALS.org

# Interior Trim and Ornamentation -

**Torque Specifications**

| Description | Nm | lb-ft | lb-in |
|---|---|---|---|
| Front Safety belt shoulder height adjuster retaining bolt | 40 | 30 | - |
| Rear safety belt lower retaining bolt | 40 | 30 | - |

GETtheMANUALS.org

Published: 11-May-2011

# Interior Trim and Ornamentation - Interior Trim

Description and Operation

This section covers removal and installation of the interior mouldings and trim panels. In many instances, one component overlaps another component. If this condition is found, it will be necessary to loosen or remove the overlapping component before removal, to prevent damage to either component. The pillar trims and the headliner are safety critical assemblies as they mount the occupant sensors and interface with the side airbag curtains (to make sure correct deployment is achieved), and as such, correct alignment and installation are necessary for safety reasons.

The headliner is a one-piece design covering the entire interior of the roof and is made of a moulded composite with cloth covering. Finger depressions give pull-down access for the sun visors and passenger assist handles are provided.

There is an interior lamp fitted into the front of the overhead console.

GETtheMANUALS.org

# Interior Trim and Ornamentation - A-Pillar Trim Panel

Removal and Installation

## Removal

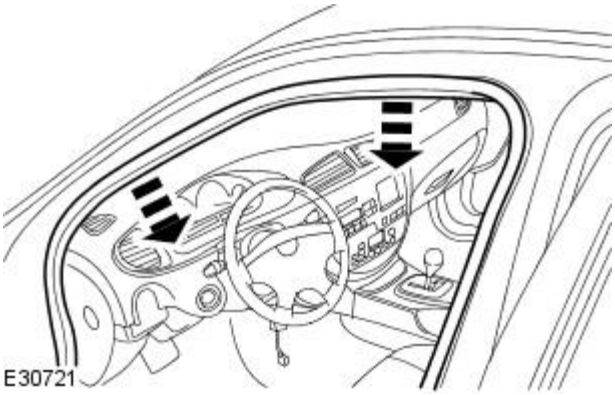


**1.** Detach the door aperture weatherstrip.

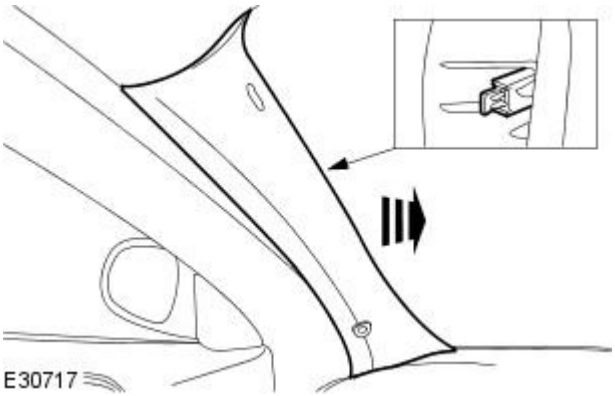


**2.** Detach the A-pillar trim panel.

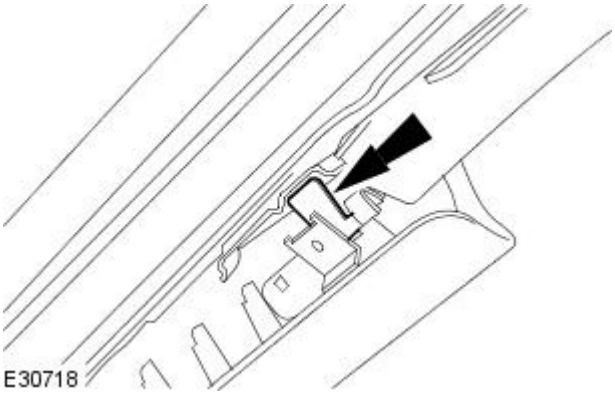


**3.** Cut the A-pillar trim panel retaining strap.

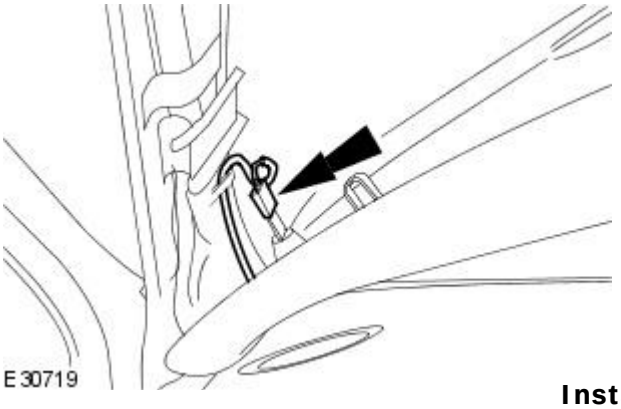


**4.** Remove the A-pillar trim panel.

- Disconnect the occupancy sensor electrical connector.

## Installation

**1.** WARNING: The retaining strap is a safety critical item and must be replaced to prevent the trim detaching in the event of the side curtain airbag deployment.

• NOTE: When installing the new retaining strap and rivet make sure the old clip has been removed from the body before pressing the trim into place

To install, reverse the removal procedure.

GETtheMANUALS.org

# Interior Trim and Ornamentation - B-Pillar Lower Trim Panel

Removal and Installation

## Removal

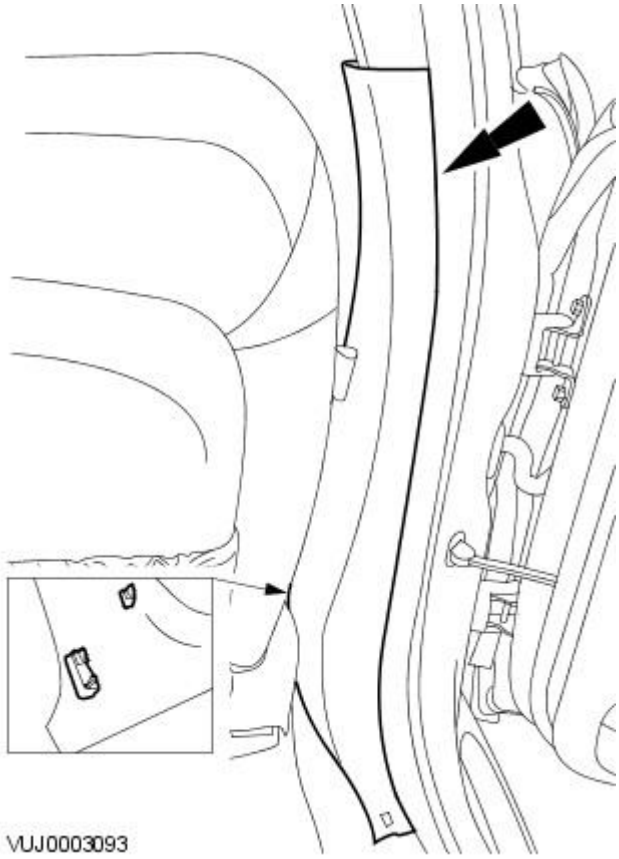


1. Remove both front and rear scuff plate trim panels.
   For additional information, refer to Scuff Plate Trim Panel in this section.
2. NOTE: Locally detach the rear door aperture weatherstrip.

   Remove the B-pillar lower trim panel.

## Installation

1. To install, reverse the removal procedure.

GETtheMANUALS.org

# Interior Trim and Ornamentation - B-Pillar Upper Trim Panel

Removal and Installation

## Removal

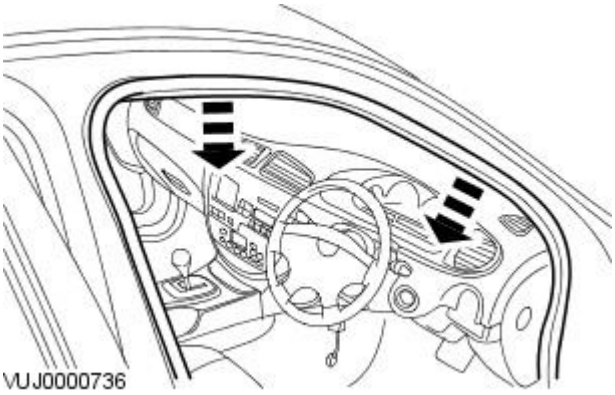


1. Remove the B-pillar lower trim panel.
   For additional information, refer to B-Pillar Lower Trim Panel in this section.
2. Locally detach the door aperture weatherstrip.

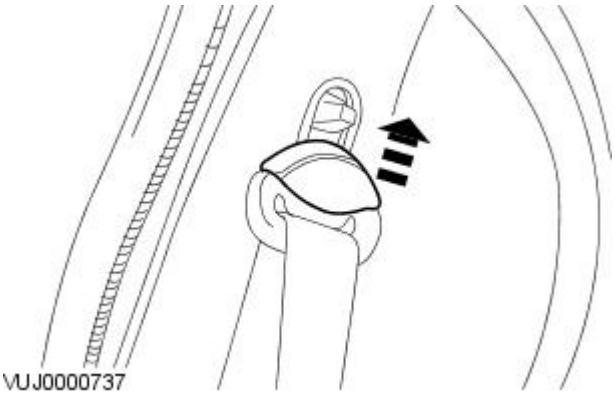


3. Remove the front safety belt shoulder height adjuster retaining nut cover.

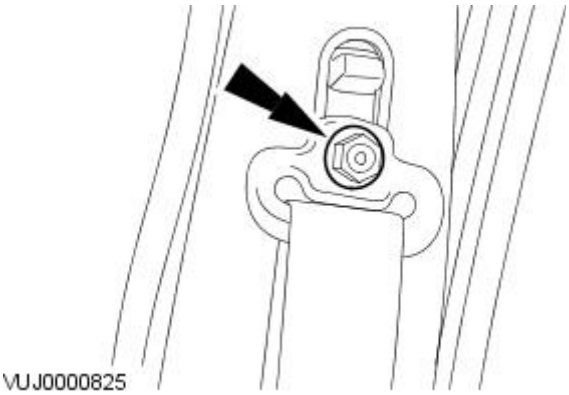


4. Detach the front safety belt shoulder height adjuster.

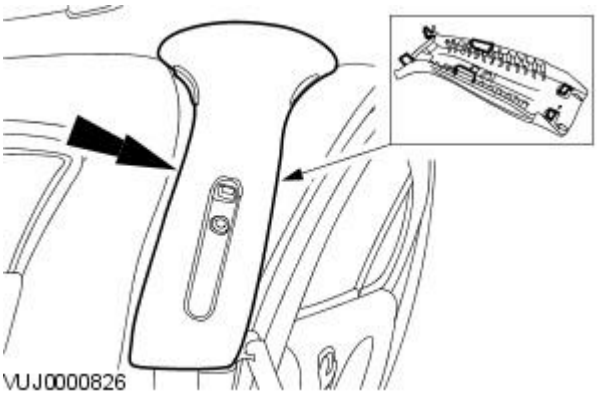


5. Remove the B-pillar upper trim panel.

## Installation

GETtheMANUALS.org

**1.** WARNING: Make sure the side airbag bracket located above the B-pillar upper trim is located into the B-pillar trim housing, as this retains the trim in the event of side airbag deployment.

To install, reverse the removal procedure.

- Tighten to 40 Nm.

GETtheMANUALS.org

# Interior Trim and Ornamentation - Cowl Side Trim Panel

Removal and Installation

## Removal

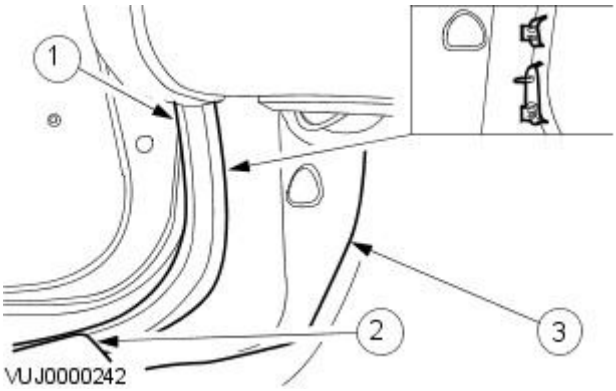


**1.** Remove the cowl side trim panel.

1. Detach the door aperture weather strip.
2. Detach the scuff panel trim.
3. Remove the cowl side trim panel.

## Installation

**1.** To install reverse the removal procedure.

GETtheMANUALS.org

# Interior Trim and Ornamentation - C-Pillar Trim Panel

Removal and Installation

## Removal

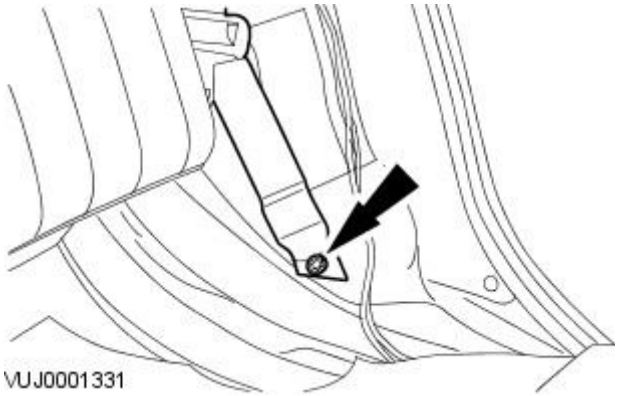


1. Remove the rear seat bolster.
   For additional information, refer to Section 501-10 Seating.
2. Detach the rear safety belt.

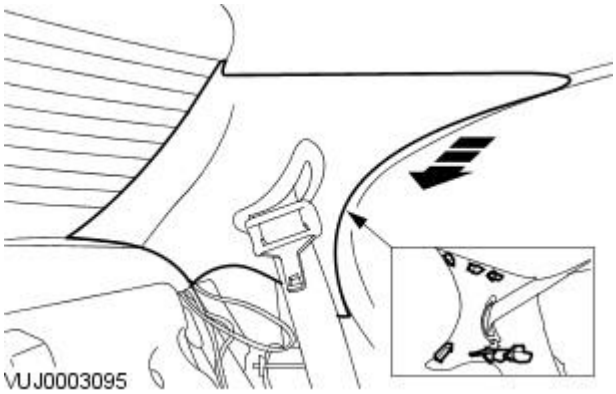


3. Locally detach the door aperture weatherstrip.
4. Detach the C-pillar trim panel.

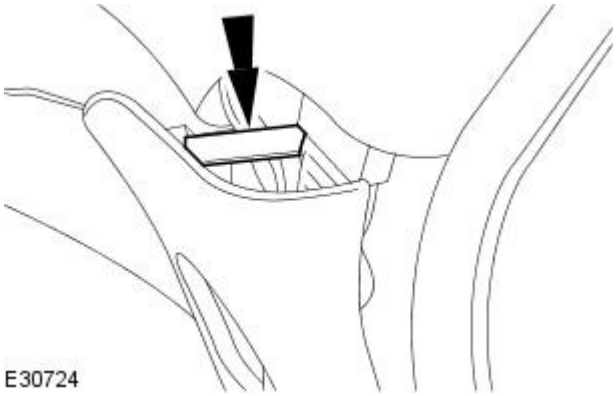


5. Remove the C-pillar trim panel.
   - Cut the C-pillar trim panel retaining strap.

## Installation

1. WARNING: The retaining strap is a safety critical item and must be replaced to prevent the trim detaching in the event of the side curtain airbag deployment.

• NOTE: When installing the new retaining strap and rivet make sure the old clip has been removed from the body before pressing the trim into place

To install, reverse the removal procedure.

GETtheMANUALS.org

# Interior Trim and Ornamentation - Front Door Trim Panel

Removal and Installation

## Removal

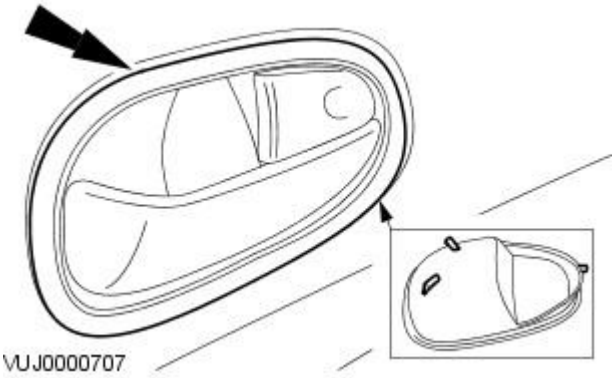


**1.** Remove the front door interior handle bezel.

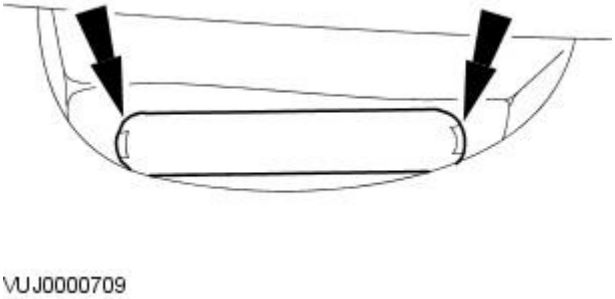


**2.** Remove the front door trim panel retaining screw cover.

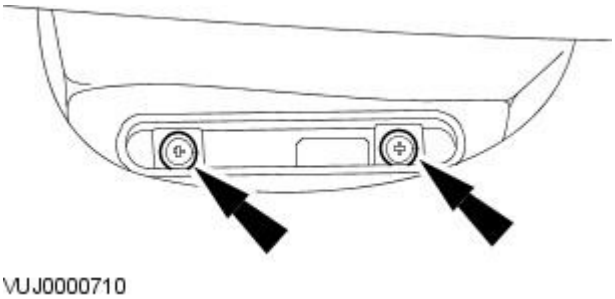


**3.** Remove the front door trim panel retaining screws.

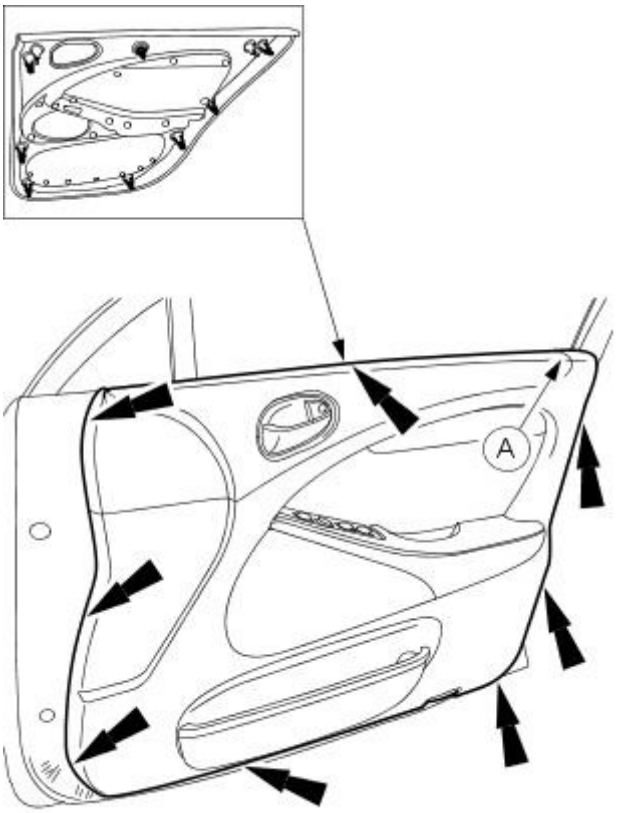


**4.** Detach the front door door trim panel.

- To aid removal release clip A by lowering the glass and pressing the panel inward.

GETtheMANUALS.org

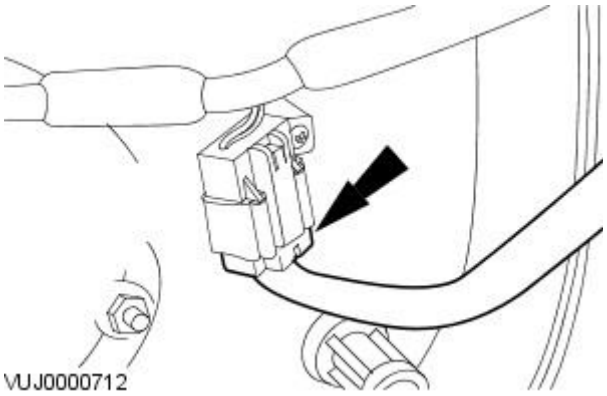


**5.** Disconnect the front door trim panel harness electrical connector.

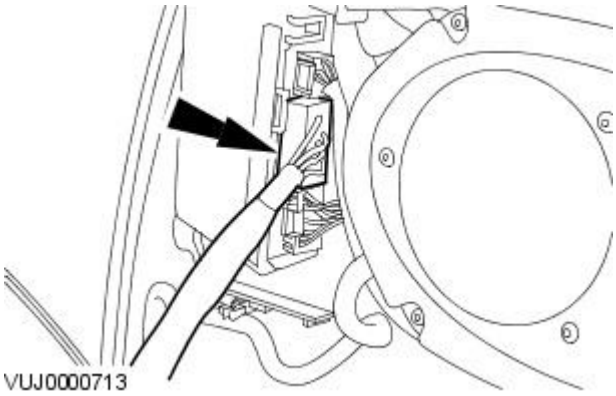


**6.** Remove the front door trim panel.

- Disconnect the driver door module electrical connector.

## Installation

**1.** To install, reverse the removal procedure.

GETtheMANUALS.org

# Interior Trim and Ornamentation - Headliner

Removal and Installation

## Removal

1. Remove the front windshield.
   For additional information, refer to Section 501-11 Glass, Frames and Mechanisms.
2. Remove both B-pillar upper trim panels.
   For additional information, refer to B-Pillar Upper Trim Panel in this section.
3. NOTE: Right-hand shown, left-hand similar.

   Detach the front passenger assist handle screw cover.

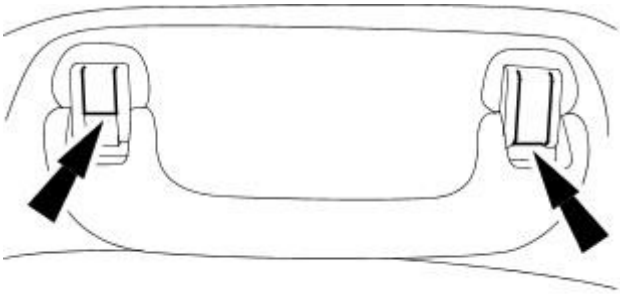

VUJ0005706

4. Remove the front passenger assist handle.

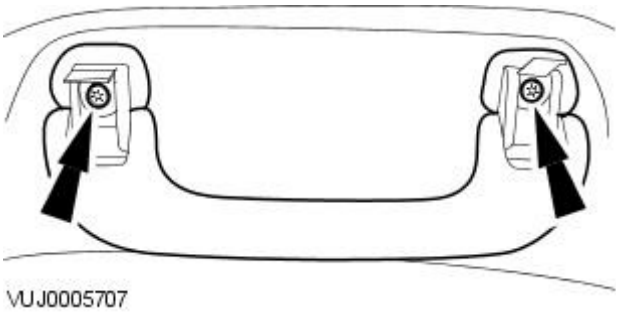

VUJ0005707

5. NOTE: Right-hand shown, left-hand similar.

   Detach the rear passenger assist handle screw covers.

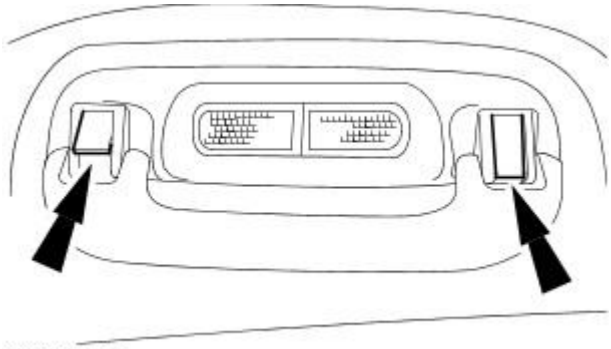

VUJ0005703

6. Detach the rear passenger assist handle.
   - Remove the rear passenger assist handle retaining screws.

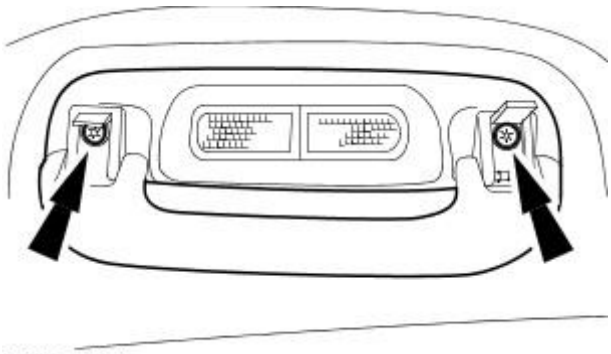

VUJ0005704

GETtheMANUALS.org

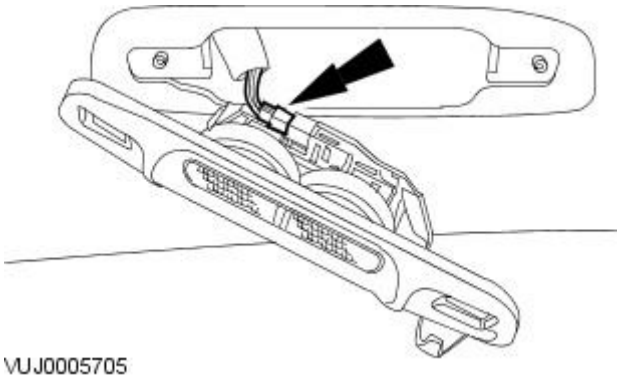


**7.** Remove the rear passenger assist handle.

- Disconnect the electrical connector.

**8.** Remove the parcel shelf.
For additional information, refer to Parcel Shelf in this section.

**9.** Disconnect the cabin harness electrical connector.

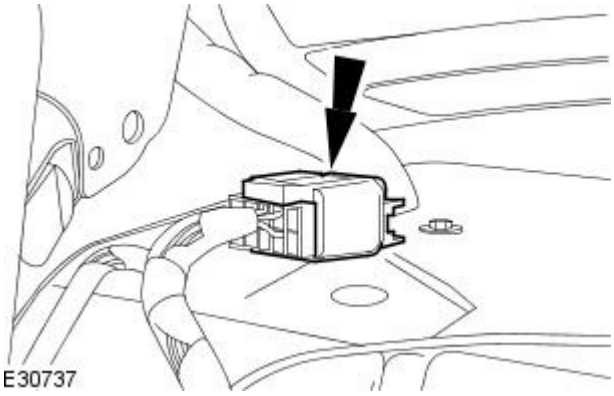


**10.** Detach the headliner.

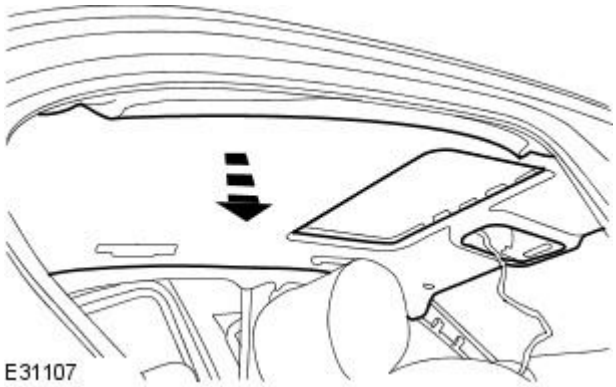


**11.** Remove the headliner through the front windshield aperture.

## Installation

**1.** To install, reverse the removal procedure.

GETtheMANUALS.org

# Interior Trim and Ornamentation - Parcel Shelf

Removal and Installation

## Removal

1. Remove both C-pillar trim panels.
   For additional information, refer to C-Pillar Trim Panel in this section.
2. NOTE: Left-hand shown, right-hand similar.

   Disconnect the antenna isolator module electrical connector.

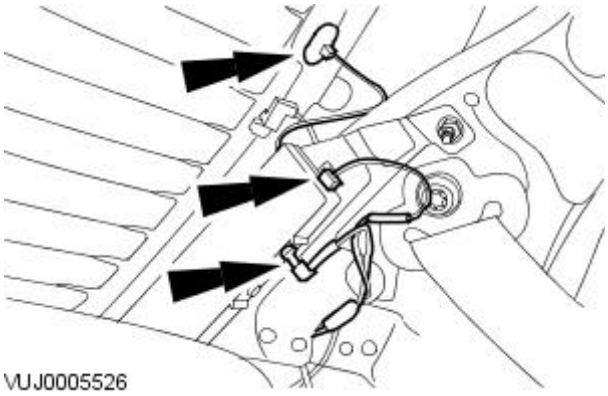


3. NOTE: Left-hand shown, right-hand similar.

   Remove the antenna isolator module retaining bracket.

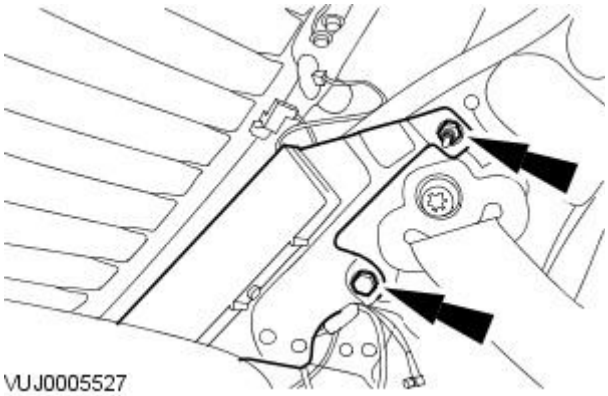


4. Disconnect the rear window blind electrical connector.

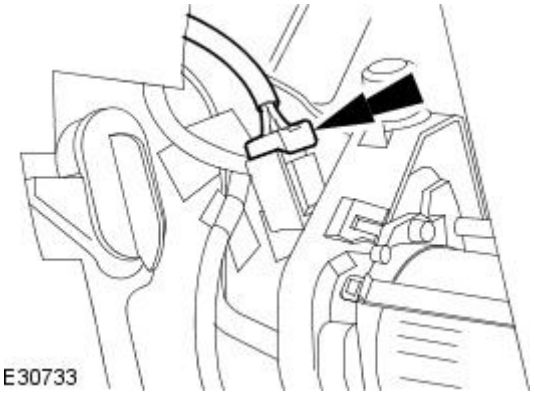


5. Disconnect the high mounted stoplamp electrical connector.

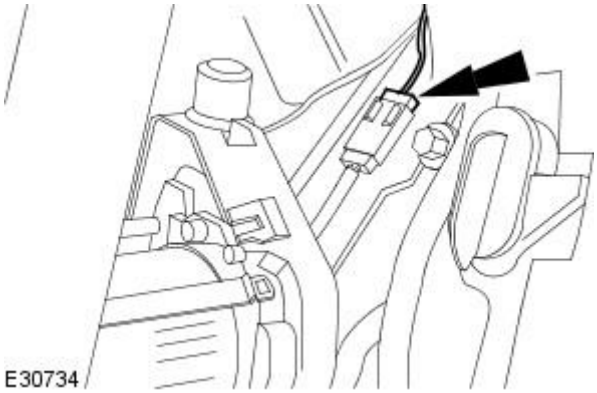


GETtheMANUALS.org

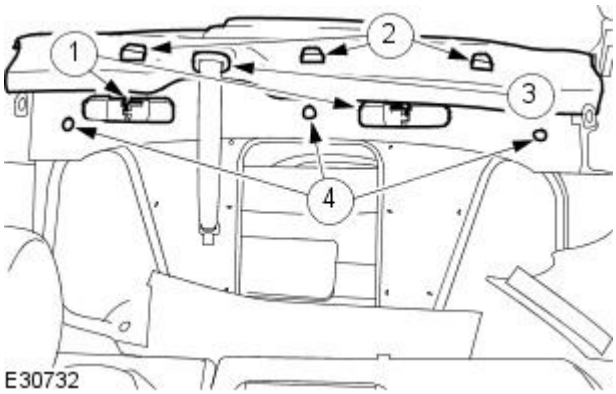


**6.** Remove the parcel shelf.

1. Remove both seat latch covers.
2. Remove the child safety belt retaining bolts.
3. Remove the center safety belt trim cover.
4. Remove the parcel shelf.

- Remove the parcel shelf retaining clips.

## Installation

**1.** To install, reverse the removal procedure.

GETtheMANUALS.org

# Interior Trim and Ornamentation - Rear Door Trim Panel

Removal and Installation

## Removal

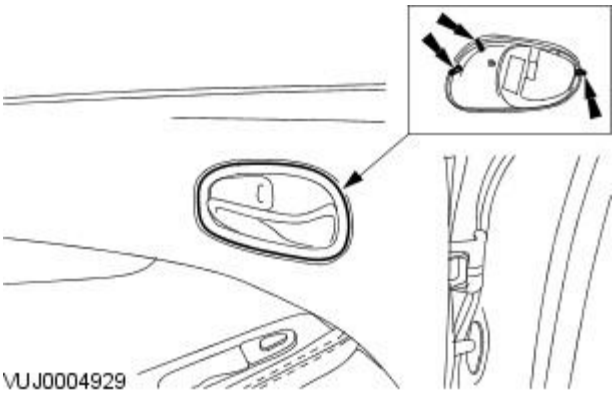


**1.** Remove the rear door interior handle bezel.

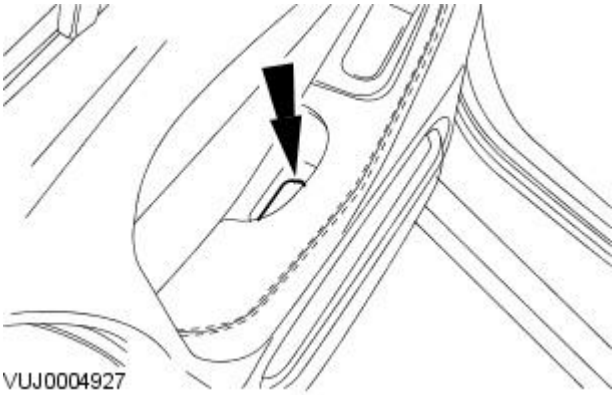


**2.** Remove the rear door trim panel retaining screw cover.

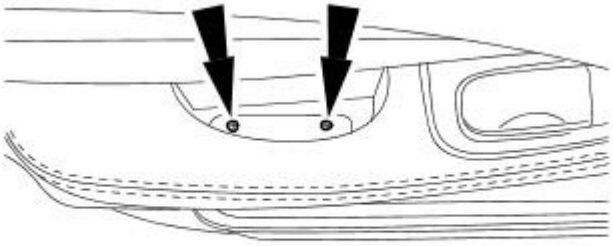

VUJ0004928

**3.** Remove the rear door trim panel retaining screws.

GETtheMANUALS.org

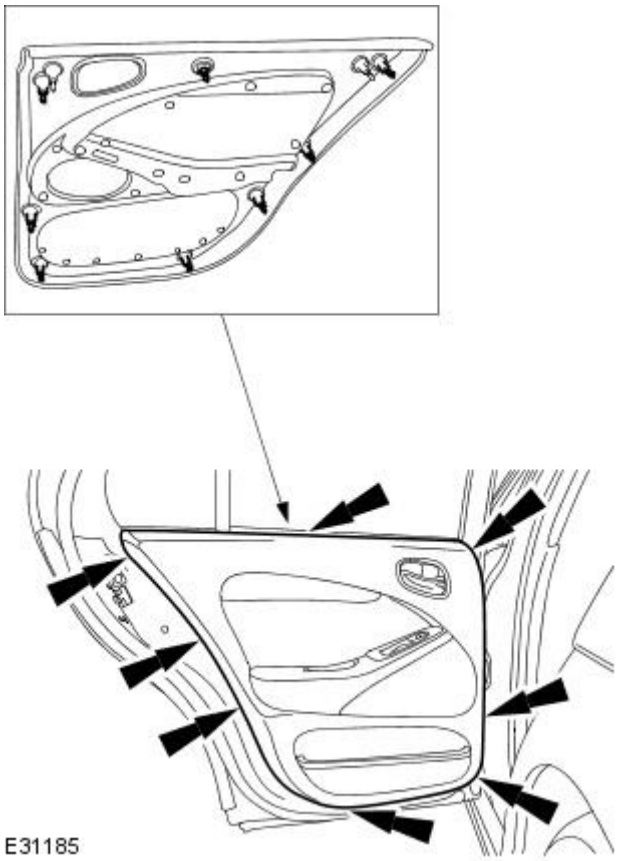


**4.** Detach the rear door trim panel.

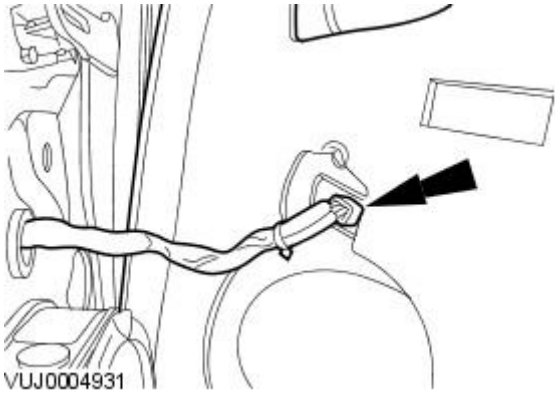


**5.** Remove the rear door trim panel.

- Disconnect the window control switch electrical connector.

## Installation

**1.** To install, reverse the removal procedure.

GETtheMANUALS.org

# Interior Trim and Ornamentation - Rear Window Blind

Removal and Installation

## Removal

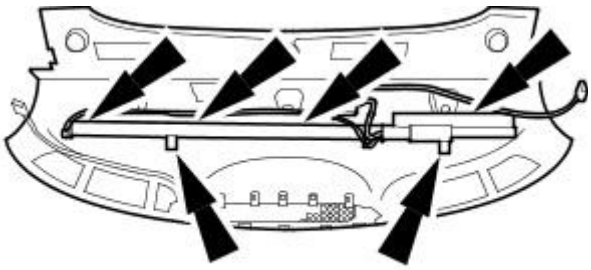

E30736

**1.** NOTE: Prior to removing the parcel shelf, power up the rear window blind to the deployed position.

Remove the parcel shelf.
For additional information, refer to Parcel Shelf in this section.

**2.** NOTE: Locally remove the insulation on the back of the parcel shelf to gain access to the rear window blind retaining screws.

Remove the rear window blind.

## Installation

**1.** To install, reverse the removal procedure.

GETtheMANUALS.org

# Interior Trim and Ornamentation - Rear Window Blind Arm

Removal and Installation

## Removal

**1.** CAUTION: Lower the rear window blind to the rest position. Failure to carry out this procedure may result in damage to the vehicle.

Lower the rear window blind to the rest position.

**2.** Remove the parcel shelf.
For additional information, refer to: Parcel Shelf (501-05 Interior Trim and Ornamentation, Removal and Installation).

**3.** NOTE: Locally remove the insulation on the back of the parcel shelf to gain access to the rear window blind retaining screws.

• NOTE: Note the fitted position of the washers.

Remove the rear window blind.

- Release the blind from the parcel shelf aperture.

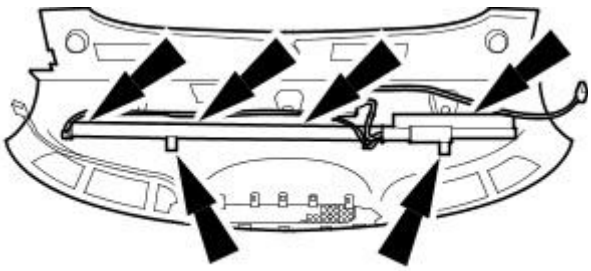

E30736

**4.** NOTE: Left-hand shown, right-hand similar.

Remove the rear window blind arm securing screw.

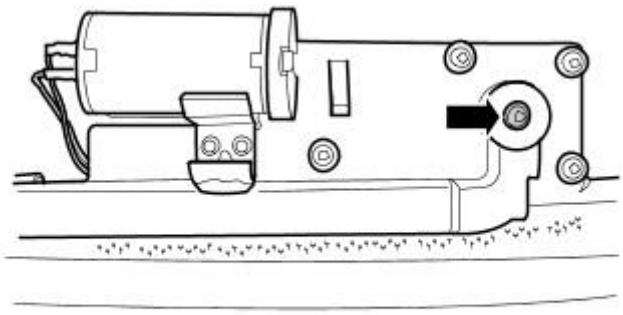

E105167

**5.** NOTE: Left-hand shown, right-hand similar.

Remove the rear window blind end caps.

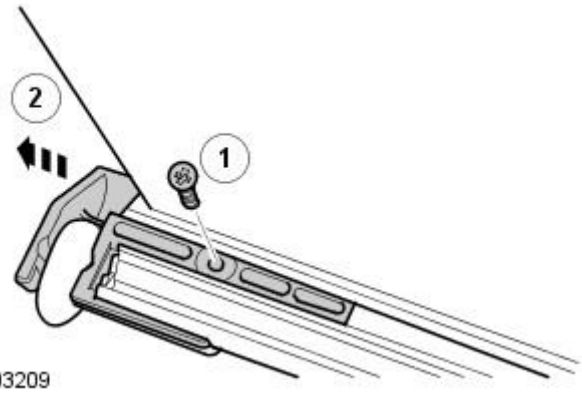


E103209

**6.** NOTE: Left-hand shown, right-hand similar.

Release the arm sliders from the rear window blind guide and remove the arms.

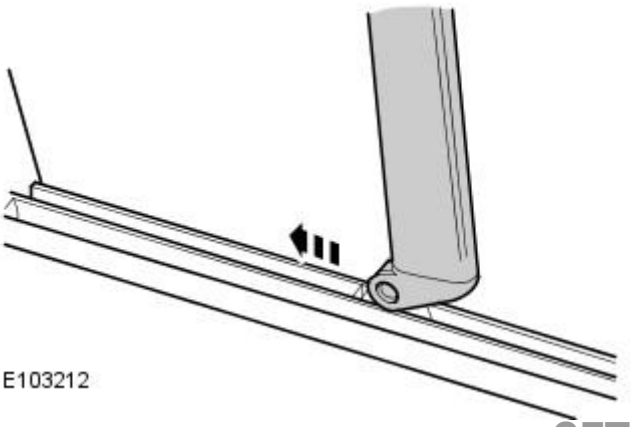

E103212

GETtheMANUALS.org

## Installation

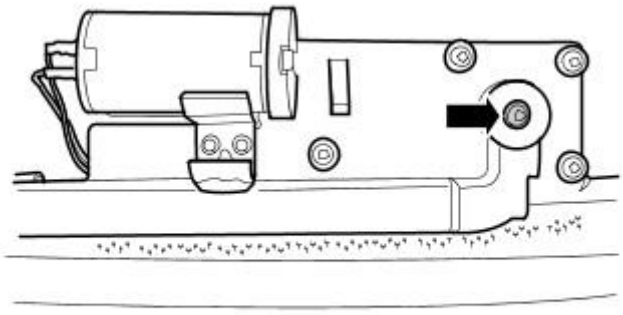

E105167

1. To install, reverse the removal procedure.
2. Tighten to 5 Nm.

GETtheMANUALS.org

# Interior Trim and Ornamentation - Rear Window Blind Motor

Removal and Installation

## Removal

• NOTE: The rear window blind motors can not be serviced separately and must be renewed in pairs.

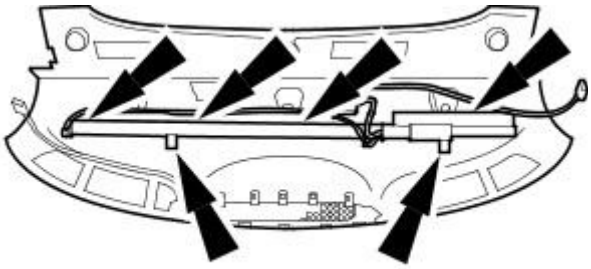

E30736

**1.** CAUTION: Lower the rear window blind to the rest position. Failure to carry out this procedure may result in damage to the vehicle.

Lower the rear window blind to the rest position.

**2.** Remove the parcel shelf.
For additional information, refer to: Parcel Shelf (501-05 Interior Trim and Ornamentation, Removal and Installation).

**3.** NOTE: Locally remove the insulation on the back of the parcel shelf to gain access to the rear window blind retaining screws.

• NOTE: Note the fitted position of the washers.

Remove the rear window blind.

- Release the blind from the parcel shelf aperture.

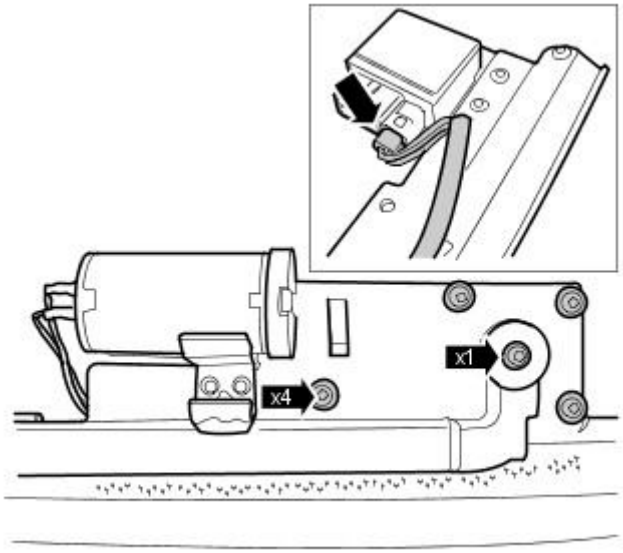


E102953

**4.** NOTE: Left-hand shown, right-hand similar.

Remove the rear window blind motors.

- Disconnect the electrical connector.
- Remove the single screw securing each arm to the motors and release both arms.
- Remove the 4 securing screws.

## Installation

**1.** To install, reverse the removal procedure.

**2.** Tighten to 5 Nm.

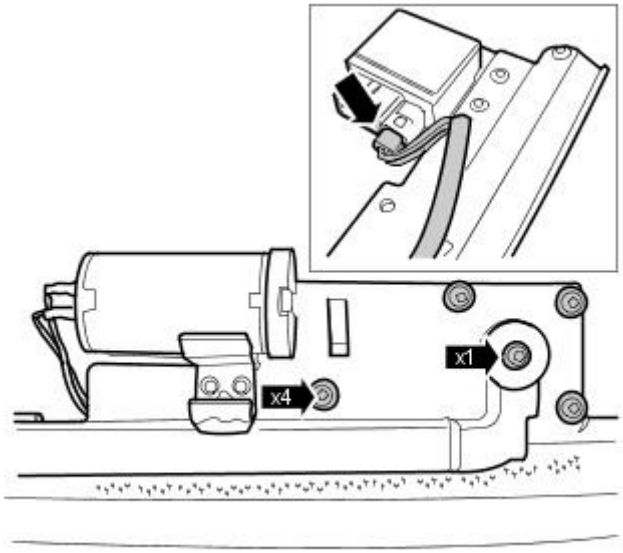


E102953

GETtheMANUALS.org

# Interior Trim and Ornamentation - Scuff Plate Trim Panel

Removal and Installation

## Removal

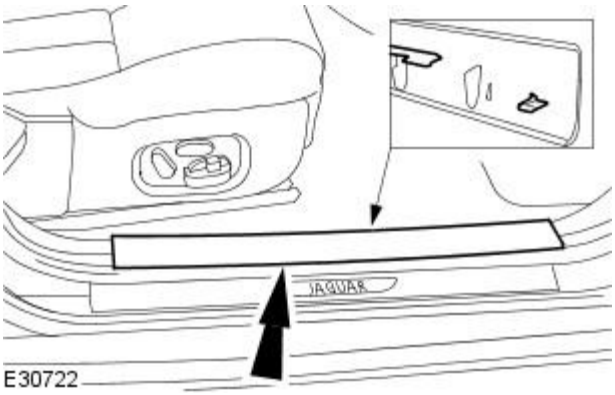


1. NOTE: Front shown, rear similar.

   Remove the scuff plate trim panel.

## Installation

1. To install, reverse the removal procedure.

GETtheMANUALS.org

# Interior Trim and Ornamentation - Sun Visor

Removal and Installation

## Removal

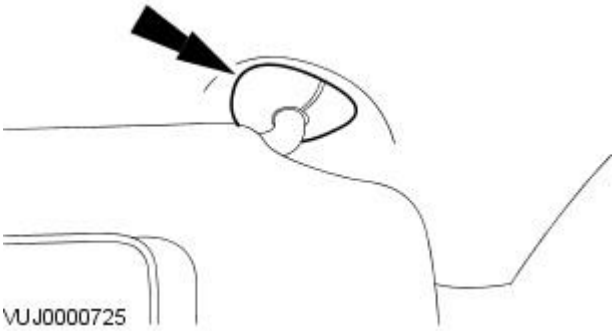


**1.** Remove the sun visor trim.

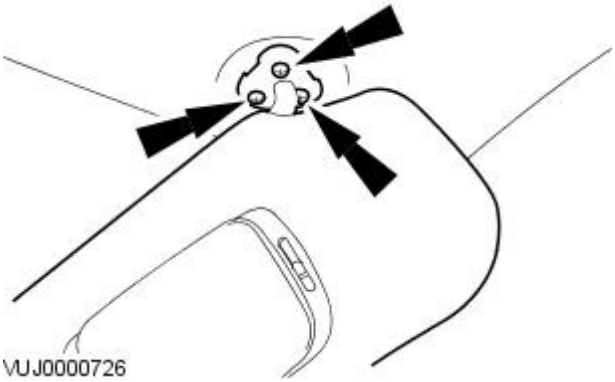


**2.** Detach the sun visor trim retaining screws.

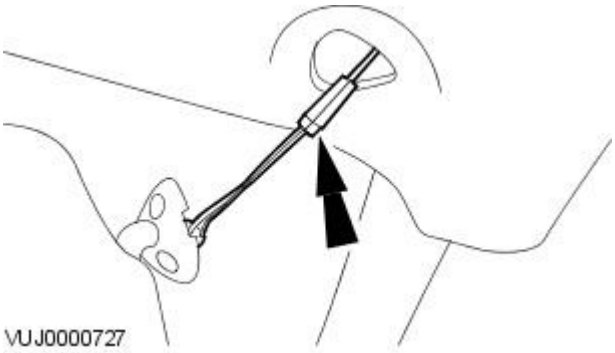


**3.** Remove the sun visor.

- Disconnect the vanity mirror electrical connector.

## Installation

**1.** To install, reverse the removal procedure.

GETtheMANUALS.org

# Exterior Trim and Ornamentation - Exterior Trim

Description and Operation

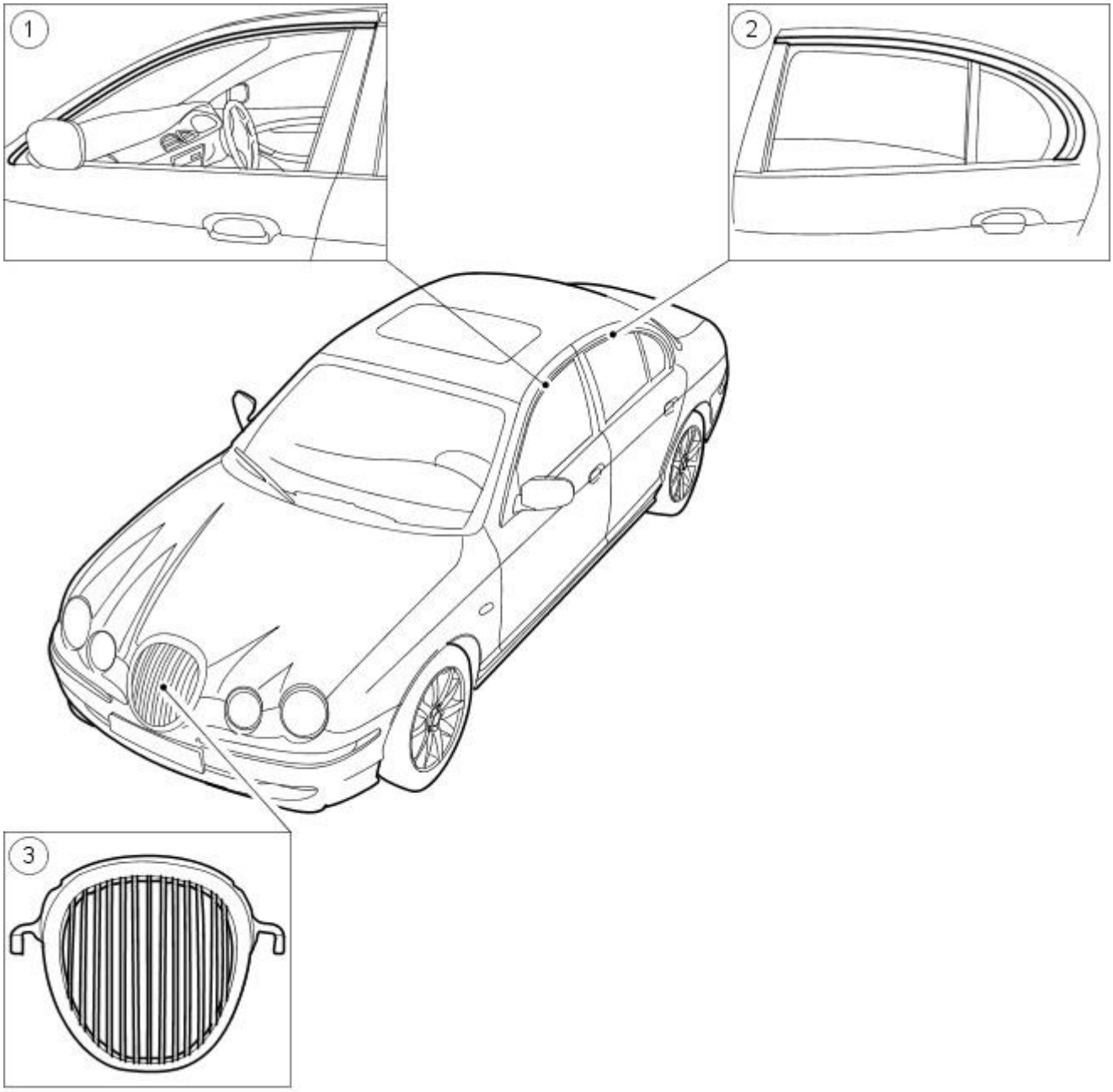


E30348

| Item | Part Number | Description |
|---|---|---|
| 1 | — | Front door window moulding |
| 2 | — | Rear door window moulding |
| 3 | — | Radiator grille |

GETtheMANUALS.org

# Exterior Trim and Ornamentation - Radiator Grille

Removal and Installation

## Removal

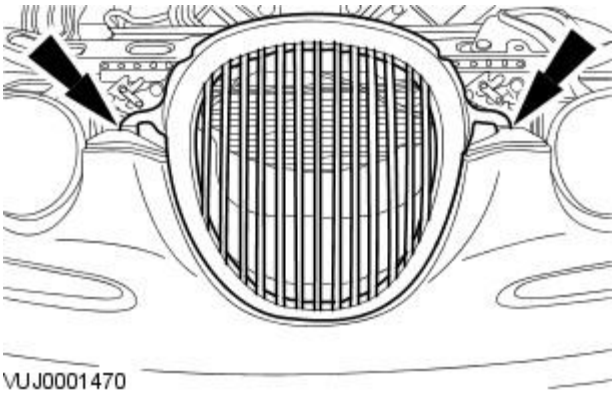


1. Remove the radiator grille retaining bolts.

2. NOTE: Right-hand shown, left-hand similar.

   Remove the radiator grille retaining bolts.

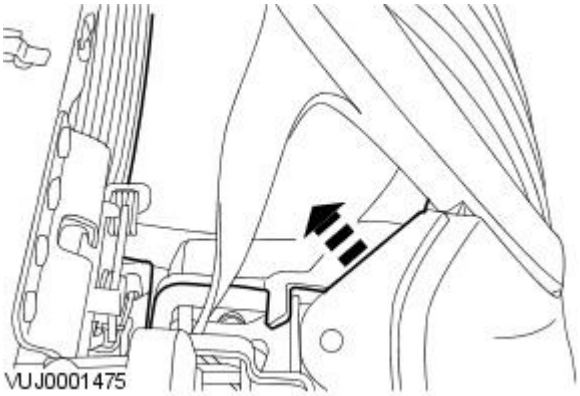


3. Remove the radiator grille.

## Installation

1. To install, reverse the removal procedure.

GETtheMANUALS.org

# Exterior Trim and Ornamentation - Window Moulding

Removal and Installation

## Removal

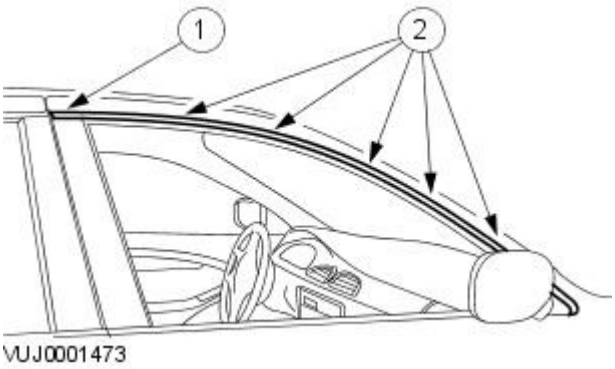


**1.** NOTE: Remove and discard the window moulding retaining clips.

Remove the door window moulding.

1. Remove the door window moulding retaining nut.
2. Remove the door window moulding.

## Installation

**1.** NOTE: Install new window moulding retaining clips.

To install, reverse the removal procedure.

GETtheMANUALS.org

# Rear View Mirrors -

**Torque Specifications**

| Description | Nm | lb-ft | lb-in |
|---|---|---|---|
| Exterior mirror retaining nuts | 6 | — | 53 |
| Exterior mirror motor retaining screws | 1 | — | 9 |

GETtheMANUALS.org

# Rear View Mirrors - Rear View Mirrors

Description and Operation

The manual dipping mirror is a prismatic unit with mirror dipping achieved by pulling the lever forward.

Where fitted, electrochromic mirrors automatically darken to prevent glare from following vehicle lights. The mirrors are equipped with a reflecting surface light sensor to enable this feature.

During daytime driving, the ambient light sensor will detect high ambient light levels and control the electrochromic rear view mirrors to provide a full, clear reflection. During night driving, the ambient light sensor will detect low ambient light levels and automatic glare reduction will occur.

A switch on the interior rear view mirror allows the driver to select the automatic glare reduction function "AUTO" or to de-select all automatic glare reduction functions "OFF".

The exterior mirrors are cheater mounted, color-coded, remote electrically adjustable and heated. Adjustment of both mirrors is carried out from the driver door switch pack. A rocker switch selects the mirror to be adjusted, and a toggle switch adjusts the selected mirror to the required position.

Automatic dipping of the exterior mirrors when reversing is fitted as part of the memory pack. With the ignition switch in position II and the reverse gear selected, automatic dipping will be initiated.

Where fitted, power fold back mirrors can be operated by the exterior mirror fold back switch incorporated in the window switch. The power fold back mirrors only operate when the mirror select switch is in the middle position, and the vehicle speed is below 19 km/h (12 mile/h).

GETtheMANUALS.org

# Rear View Mirrors - Rear View Mirrors

Diagnosis and Testing

1. **1.** Verify the customer concern.
2. **2.** Visually inspect for obvious signs of mechanical or electrical damage.

**Visual Inspection Chart**

| Mechanical | Electrical |
|---|---|
| • Exterior mirror(s) | • Fuse(s)<br>• Relay<br>• Electrical connector(s)<br>• Switch |

3. **3.** If an obvious cause for an observed or reported concern is found, correct the cause (if possible) before proceeding to the next step.
4. **4.** If the cause is not visually evident, verify the symptom and refer to the Jaguar Approved Diagnostic System.

GETtheMANUALS.org

# Rear View Mirrors - Auto-Dimming Interior Mirror

Removal and Installation

## Removal

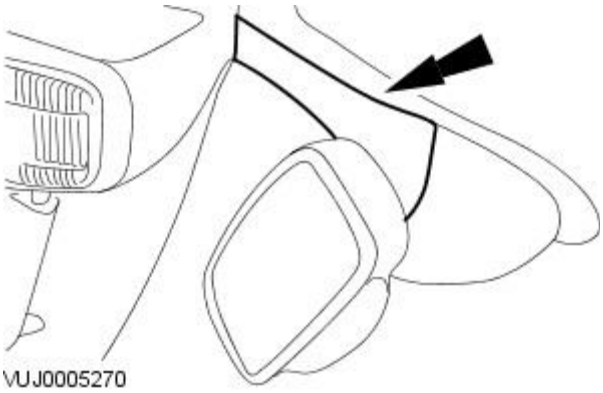


**1.** Remove the auto-dimming interior mirror trim panel.

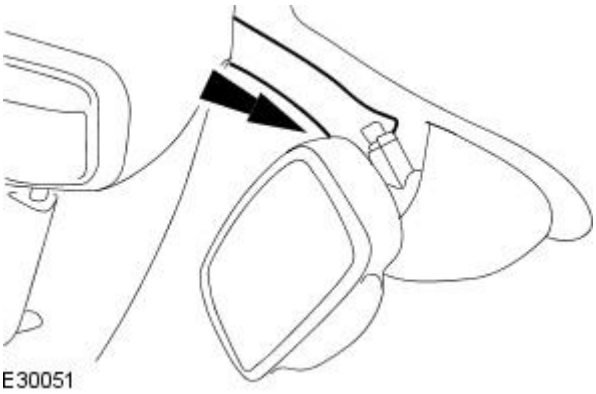


**2.** Disconnect the electrical connector.

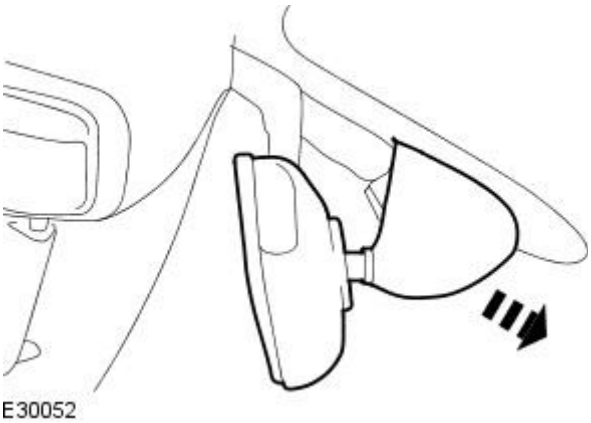


**3.** Remove the auto-dimming interior mirror.

## Installation

**1.** To install, reverse the removal procedure.

GETtheMANUALS.org

# Rear View Mirrors - Exterior Mirror

Removal and Installation

## Removal

1. Remove the front door trim panel.
   For additional information, refer to Section 501-05 Interior Trim and Ornamentation.
2. Disconnect the exterior mirror electrical connector.

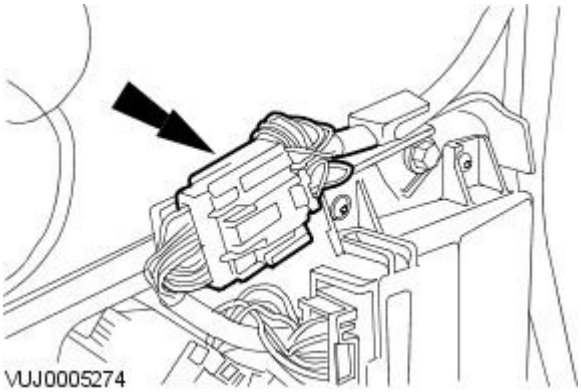


3. Detach the front door window glass interior trim panel.

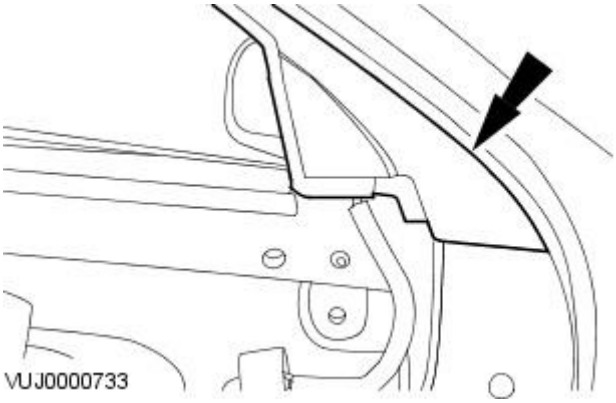


4. Remove the exterior mirror retaining nut covers.

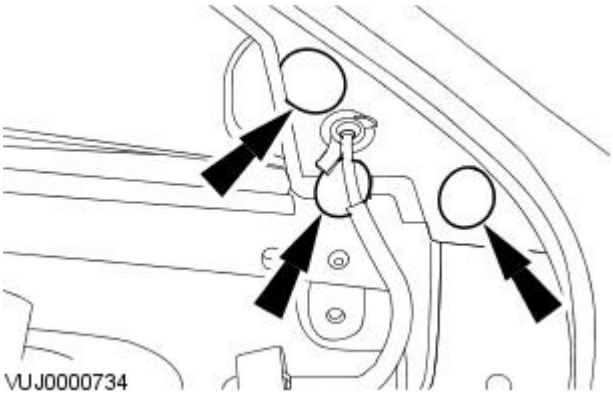


5. Detach the wiring harness grommet.

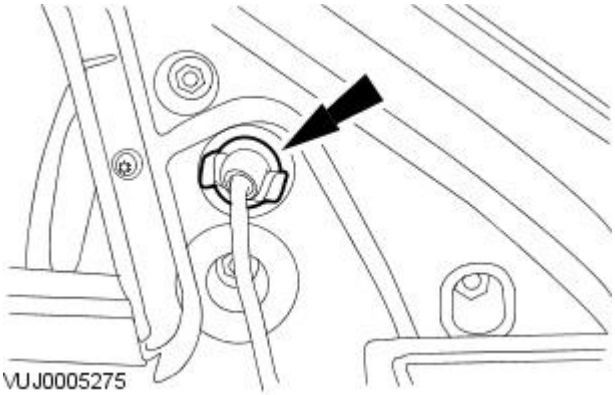


GETtheMANUALS.org

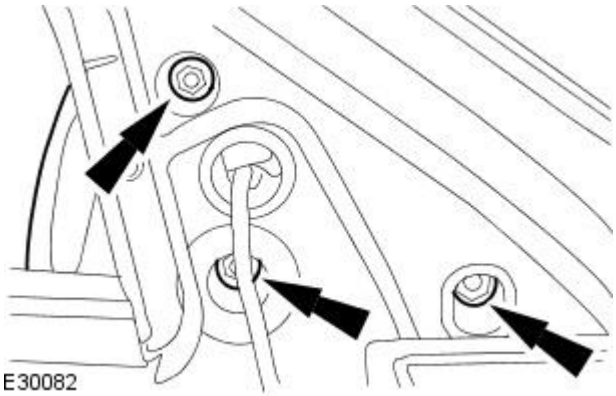


**6.** NOTE: Hold the exterior mirror while removing the retaining nuts.

Remove the exterior mirror.

## Installation

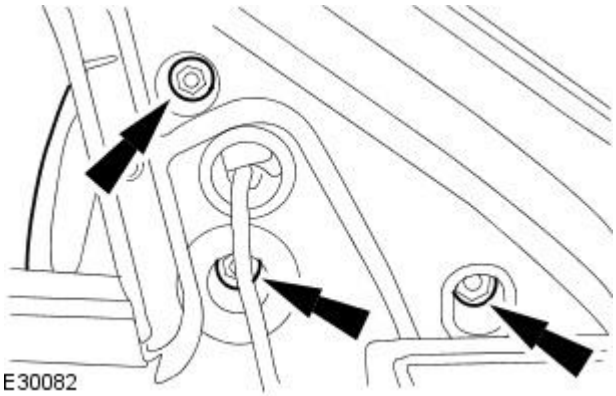


**1.** To install, reverse the removal procedure.

- Tighten to 6 Nm.

GETtheMANUALS.org

# Rear View Mirrors - Exterior Mirror Cover

Removal and Installation

## Removal

1. Remove the exterior mirror glass.
   For additional information, refer to Exterior Mirrror Glass in this section.
2. Detach the inner edge of the exterior mirror cover.

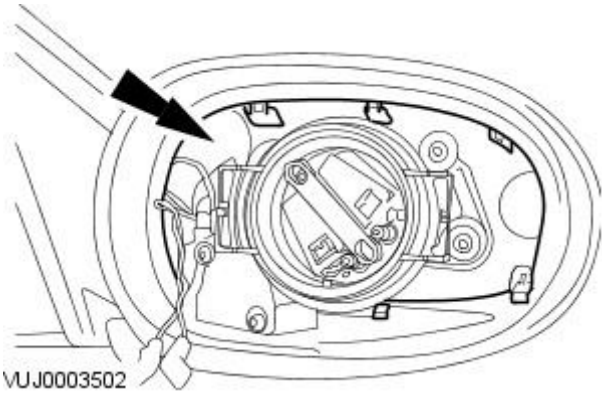


3. Detach the outer edge of the exterior mirror cover.

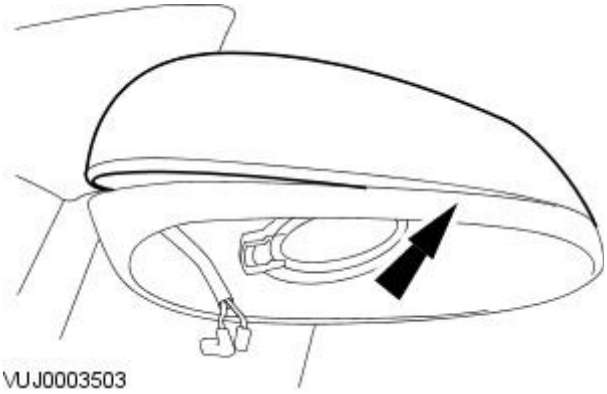


4. Remove the exterior mirror cover.

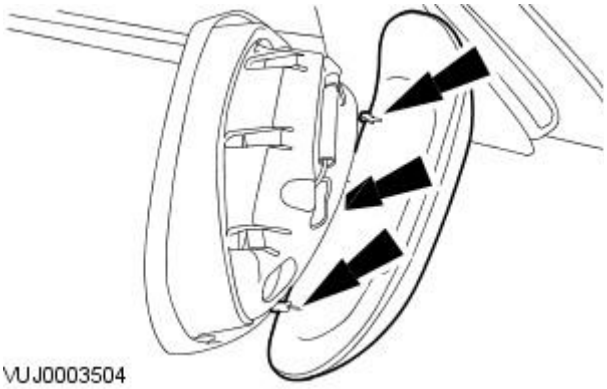


## Installation

1. To install, reverse the removal procedure.

GETtheMANUALS.org

# Rear View Mirrors - Exterior Mirror Glass

Removal and Installation

## Removal

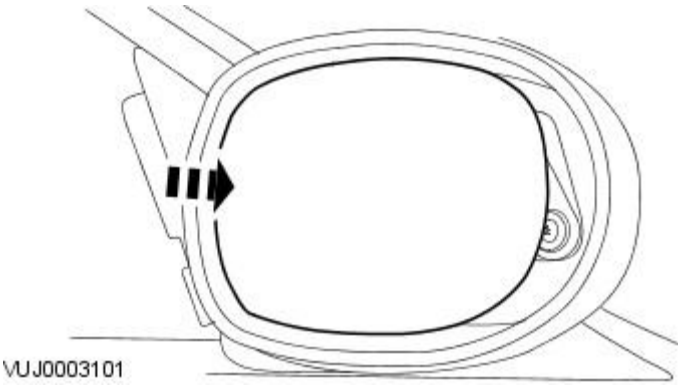


**1.** Apply light pressure to the exterior mirror glass.

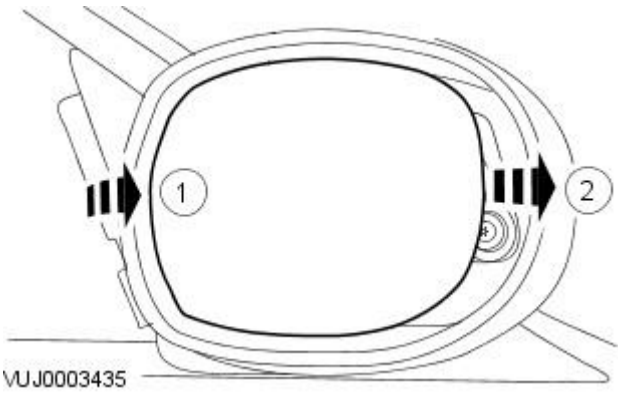


**2.** Detach the mirror glass.

1. Apply light pressure to the inner edge of the mirror glass.
2. Pull the outer edge of the mirror glass to detach the mirror glass.

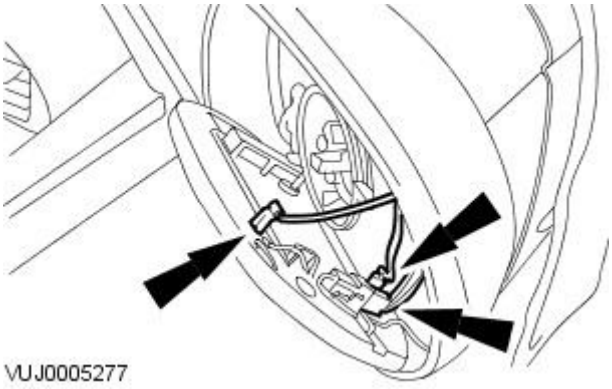


**3.** Remove the exterior mirror glass.

- Disconnect the electrical connectors.

## Installation

**1.** To install, reverse the removal procedure.

GETtheMANUALS.org

# Rear View Mirrors - Exterior Mirror Motor

Removal and Installation

## Removal

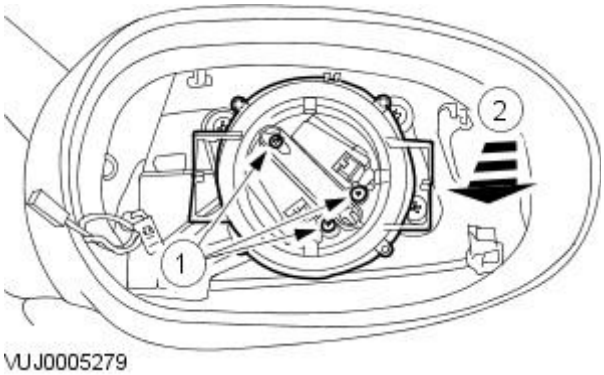


VUJ0005279

1. Remove the exterior mirror glass.
   For additional information, refer to Exterior Mirrror Glass in this section.
2. Detach the exterior mirror motor.
   1. Remove the exterior mirror motor retaining screws.
   2. Detach the exterior mirror motor.

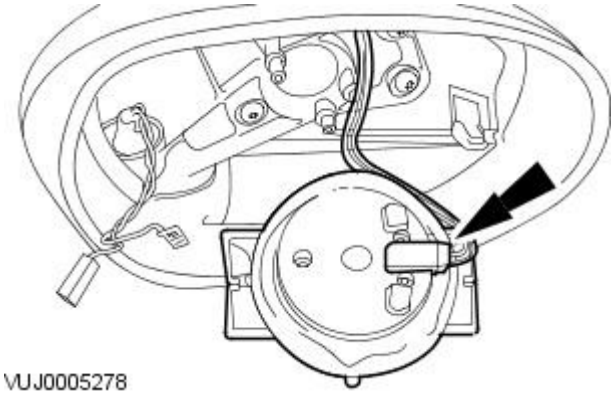

VUJ0005278

3. Remove the exterior mirror motor.
   - Disconnect the electrical connector.

## Installation

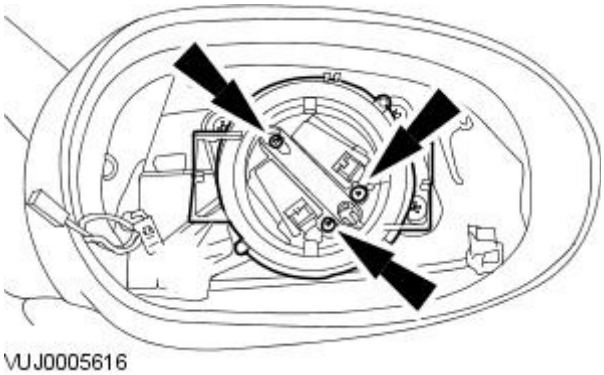

VUJ0005616

1. To install, reverse the removal procedure.
   - Tighten to 1 Nm.

GETtheMANUALS.org

# Seating -

**Torque Specifications**

| Description | Nm | lb-ft | lb-in |
|---|---|---|---|
| Front seat backrest retaining bolts | 25 | 18 | - |
| Front seat safety belt anchor retaining bolts | 35 | 26 | - |
| Front seat rear retaining bolts | 47 | 35 | - |
| Front seat front retaining bolts | 47 | 35 | - |
| Front safety belt buckle retaining bolt | 35 | 26 | - |
| Rear seat backrest retaining bolts | 17 | 13 | - |
| Side air bag module retaining nuts | 7 | - | 62 |

GETtheMANUALS.org

# Seating - Seats

Description and Operation

Front Seats

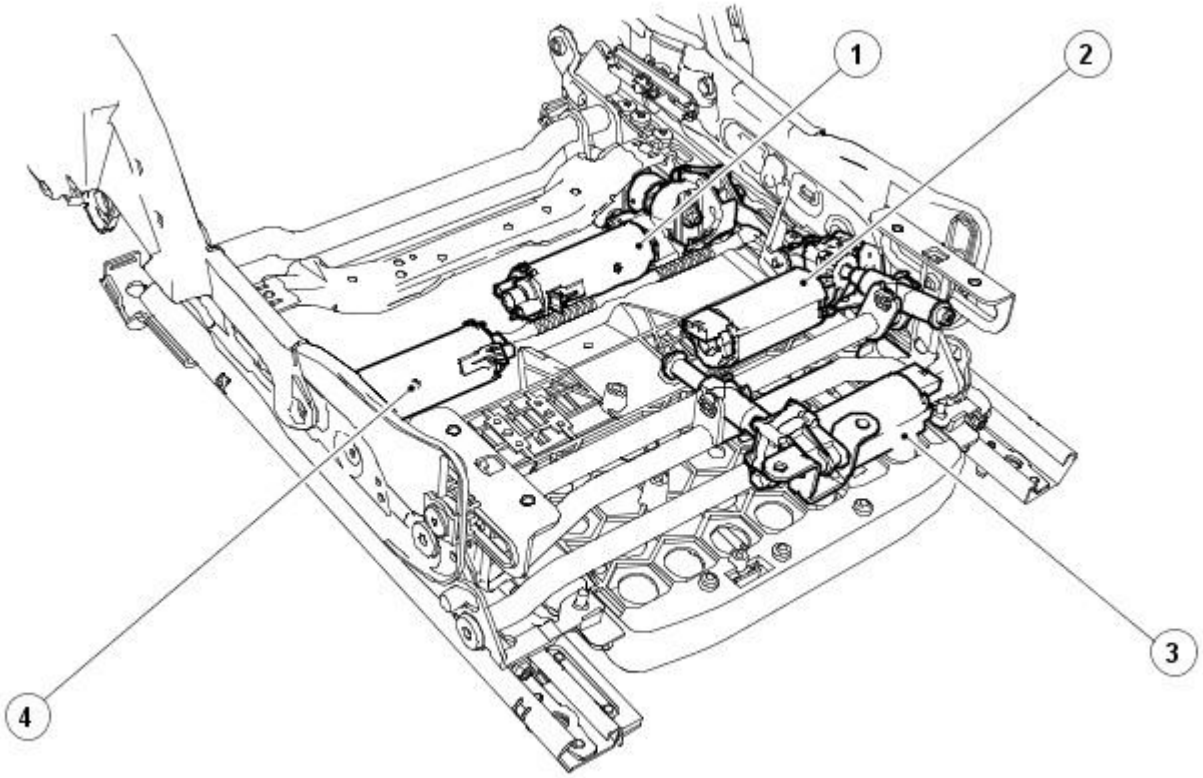


E39535

| Item | Part Number | Description |
|---|---|---|
| 1 | - | Front seat height adjustment motor |
| 2 | - | Front seat front height adjustment motor |
| 3 | - | Front seat cushion extension motor |
| 4 | - | Front seat track motor |

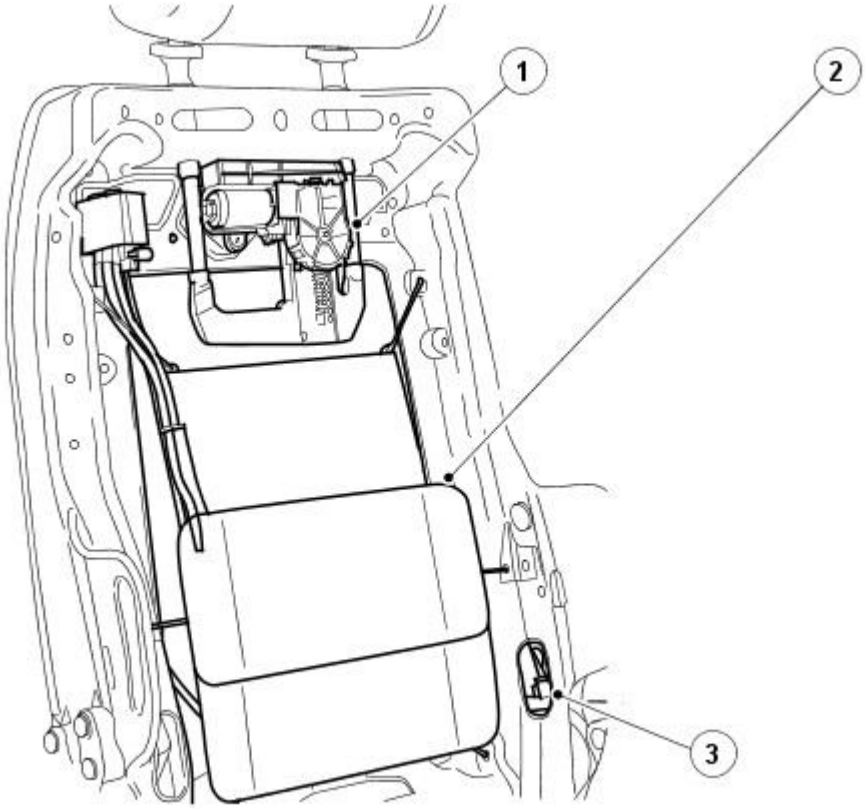


E39536

| Item | Part Number | Description |
|---|---|---|
| 1 | - | Front seat head restraint motor |
| 2 | - | Lumbar assembly |
| 3 | - | Front seat recliner motor |

GETtheMANUALS.org

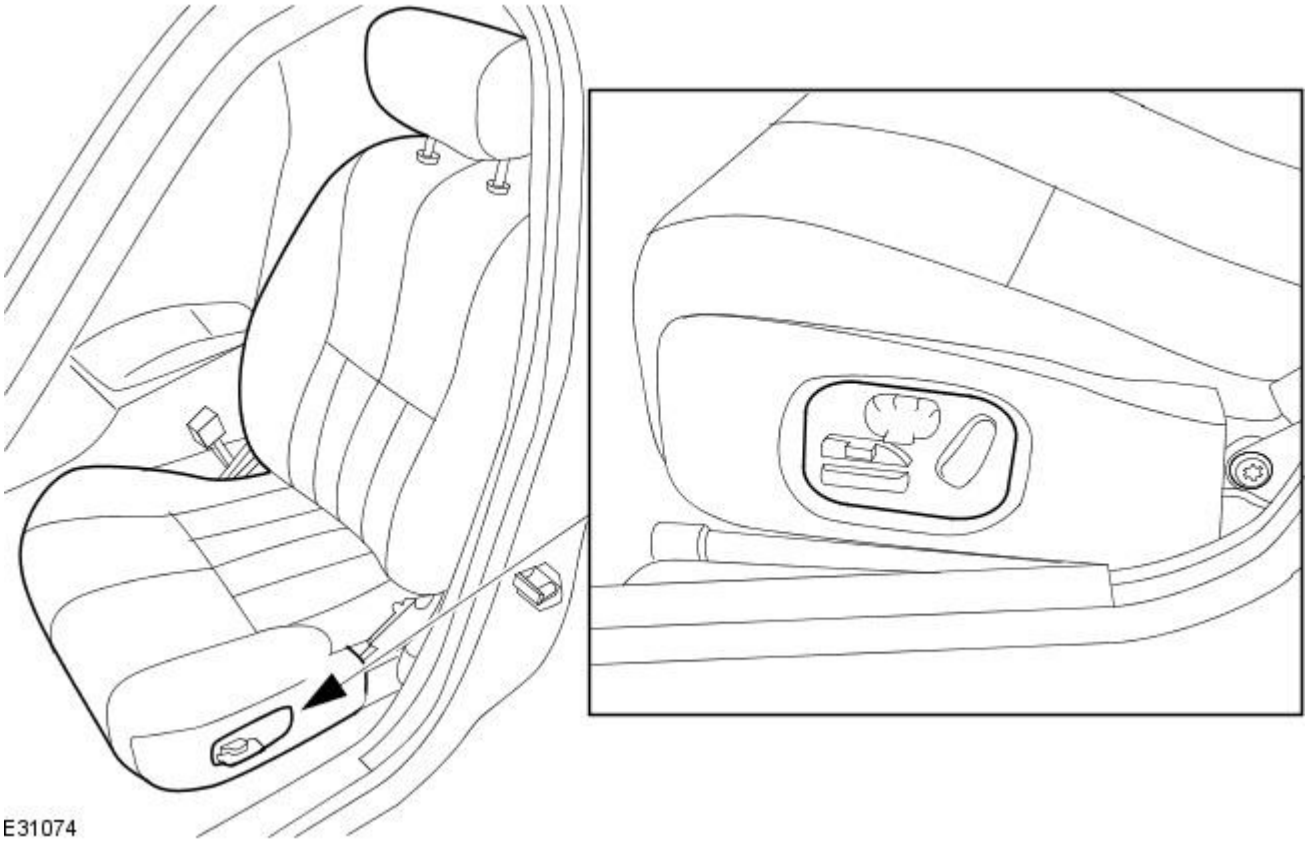


Each front seat has a handed seat cushion, a common backrest frame and seat adjuster mechanism. Both the driver and passenger seats are retained to the vehicle floorpan at four points.

The driver and passenger seats, although almost identical, have some unique components fitted. The driver seat has a seat track position sensor and the passenger seat has an occupant weight sensing system, both components form an integral part of the occupant restraints system.

The front seats have a side airbag module fitted to the outer side of the front seat backrest and the front seat backrest cover has an integral chute to aid in the deployment of the side air bag.

An anti-whiplash system (if equipped) is fitted to both front seats, the system has no serviceable components and after it has been activated the complete front seat backrest must be replaced.

The standard 8 way front seat is equipped with seat up and down height adjustment, forward and rearward adjustment and seat backrest recliner adjustment. The standard front seat also incorporates a two way lumbar support assembly that is fitted to the seat backrest and inflates an air filled bladder to give the required support. The electrical functions can be utilized by operating the front seat control switch and then the driver seat position can be stored by the driver seat module (DSM). The driver seat can be programmed for up to two different driver seat configurations and the seat memory switch located in the driver door switch pack, can be used to retrieve the programmed configurations.

In addition to the standard front seat functionality the 12 way front seat incorporates:

- front seat front height adjustment.
- head restraint adjustment.

In addition to the 12 way front seat functionality the 16 way high level front seat incorporates:

- four way lumbar support adjustment.
- extendible seat cushion adjustment.

Rear Seats

GETtheMANUALS.org

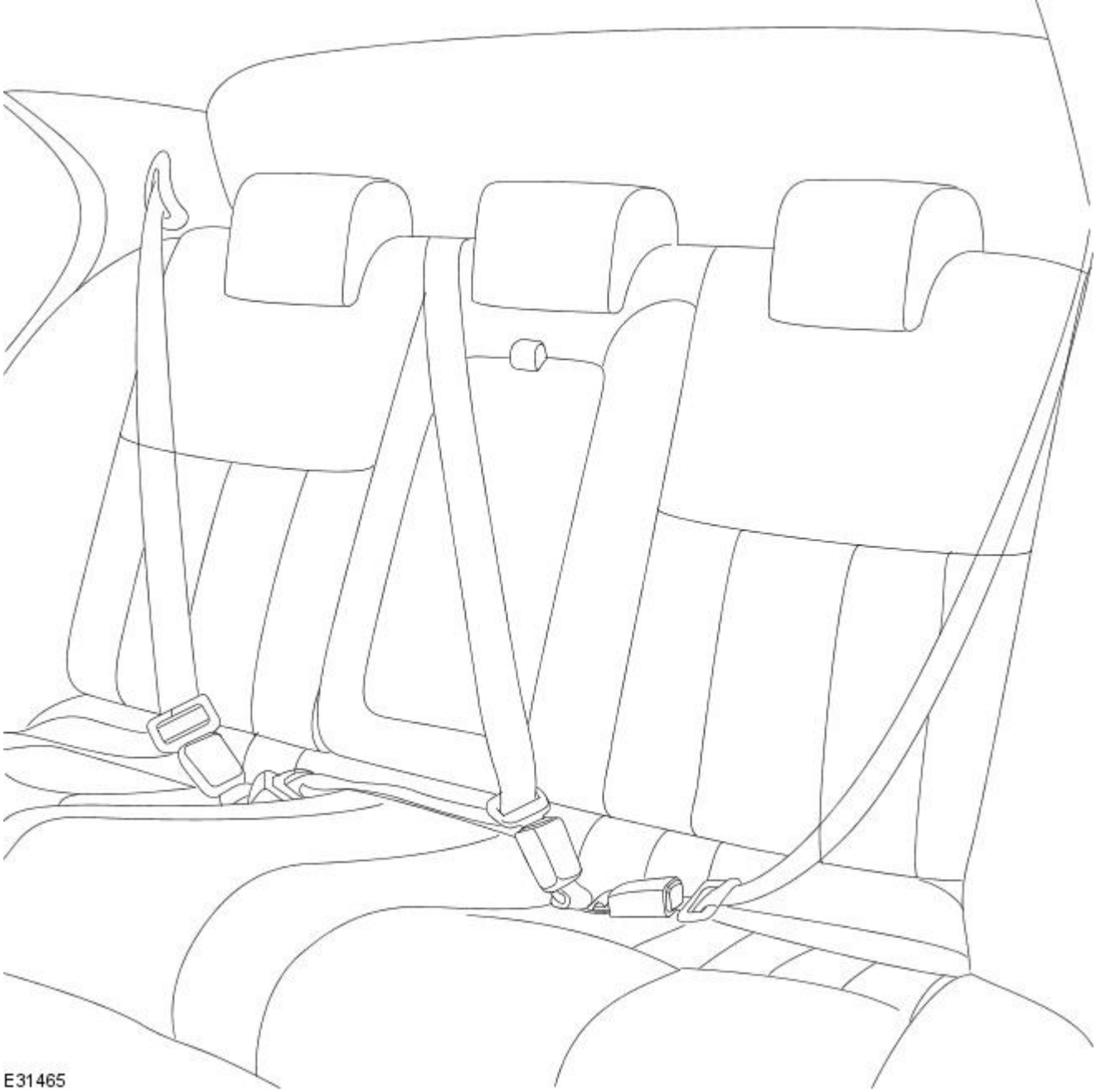


The standard rear seat is of a bench type with full width removable seat cushion. The rear seat backrest is available as a split 60/40 to allow larger loads to be accommodated.

GETtheMANUALS.org

# Seating - Seats

Diagnosis and Testing

## Principle of Operation

For a detailed description of the seats and seat operation, refer to the relevant Description and Operation section in the workshop manual. REFER to: Seats (501-10, Description and Operation).

## Inspection and Verification

CAUTION: Diagnosis by substitution from a donor vehicle is **NOT** acceptable. Substitution of control modules does not guarantee confirmation of a fault, and may also cause additional faults in the vehicle being tested and/or the donor vehicle.

• NOTE: Prior to carrying out any diagnosis, ensure the vehicle battery is in a good serviceable condition, refer to the battery care manual.

1. **1.** Verify the customer concern.
2. **2.** Visually inspect for obvious signs of damage and system integrity.

**Visual Inspection**

| Mechanical | Electrical |
|---|---|
| • Security, condition and correct installation of seat components and fixings | • Fuses<br>• Harnesses for damage/corrosion<br>• Electrical connectors<br>• Damaged/corroded pins |

3. **3.** If an obvious cause for an observed or reported concern is found, correct the cause (if possible) before proceeding to the next step.
4. **4.** If the cause is not visually evident, verify the concern and refer to the Symptom Chart, alternatively, check for Diagnostic Trouble Codes (DTCs) and refer to the DTC Index/Summaries.

## Symptom Chart

| Symptom | Possible Cause | Action |
|---|---|---|
| Front seat fore/aft movement not functioning | • Carry out the pinpoint test associated to this Symptom | GO to Pinpoint Test A. |
| Front seat excessive fore/aft free play | • Carry out the pinpoint test associated to this Symptom | GO to Pinpoint Test B. |
| Front seat fore/aft movement noisy | • Carry out the pinpoint test associated to this Symptom | GO to Pinpoint Test C. |
| Front seat height, tilt and/or seat extension motor movement not functioning | • Carry out the pinpoint test associated to this Symptom | GO to Pinpoint Test D. |
| Front seat height, tilt and/or extension movement noisy | • Carry out the pinpoint test associated to this Symptom | GO to Pinpoint Test E. |

## Pinpoint Tests

| PINPOINT TEST A : FRONT SEAT FORE/AFT MOVEMENT NOT FUNCTIONING | |
|---|---|
| **TEST CONDITIONS** | **DETAILS/RESULTS/ACTIONS** |
| **A1: CHECK FOR FRONT SEAT FORWARD-REARWARD SEAT MOTOR OPERATION** | |
| | WARNING: Before work is carried out, make the air bag supplemental restraint system safe. For additional information, refer to Standard Workshop Practices section of workshop manual.<br>1 Set ignition status to ' ON'.<br>2 From the switch pack, operate the front seat forward-rearward seat motor switch and listen for evidence of the motor operating. |
| | Does the motor operate?<br>**Yes**<br>GO to A2.<br>**No**<br>GO to A3. |
| **A2: CHECK FRONT SEAT FORWARD-REARWARD SEAT MOTOR DRIVE BAR** | |
| | 1 Check front seat drive bar for correct installation and condition |
| | Is the front seat drive bar correctly installed and in a serviceable condition?<br>**Yes**<br>Re-check for correct front seat forward-rearward movement. Remove seat to allow for further investigation if required.<br>**No**<br>Correctly install front seat forward-rearward seat motor drive bar, or replace if required. |
| **A3: CHECK FRONT SEAT FORWARD-REARWARD SEAT MOTOR** | |
| WARNING: When carrying out the following steps, stand clear of all moving parts and ensure link harness is routed accordingly. | |
| | 1 Set ignition status to 'OFF'. |
| | 2 Disconnect front seat forward-rearward seat motor connector. |

GETtheMANUALS.org

• NOTE: It may be that the seat has been driven to the limit of travel along the relevant axis, and when the link harness is connected, the seat will remain in the same position. If this is the case, a jolt may be felt from the motor. To confirm the motor operation, swap the link harness to alternate motor pin connections and the seat should travel in the opposite direction.

3 Using a locally made fused link harness and power supply, connect power and ground to forward-rearward seat motor.

| Battery positive terminal | Battery negative terminal |
|---|---|
| forward-rearward seat motor pin 1 | forward-rearward seat motor pin 2 |

Does the motor operate?

**Yes**

Using manufacturer approved diagnostic system, check for related Diagnostic Trouble Codes (DTCs) and carry out the repair operations specified. Alternatively, refer to the electrical circuit diagrams and check front seat forward-rearward seat motor circuits.

**No**

Replace front seat forward-rearward seat motor. Refer to relevant section of workshop manual.

## PINPOINT TEST B : FRONT SEAT EXCESSIVE FORWARD-REARWARD FREE PLAY

| TEST CONDITIONS | DETAILS/RESULTS/ACTIONS |
|---|---|
| **B1: CHECK FRONT SEAT FOR EXCESSIVE FORWARD-REARWARD FREE PLAY** | |
| | WARNING: Before work is carried out, make the air bag supplemental restraint system safe. For additional information, refer to Standard Workshop Practices section of workshop manual.<br>1 Check all accessible front seat frame fixings are installed and to the correct torque. |
| | Are all accessible front seat frame fixings installed and to the correct torque?<br>**Yes**<br>GO to B2.<br>**No**<br>Install and tighten all accessible front seat frame fixings to correct torque and re-check for excessive free play. |
| **B2: COMPARE THE FRONT SEAT FORWARD-REARWARD FREE PLAY AGAINST A SIMILAR SEAT** | |
| | 1 Compare the front seat forward-rearward free play against a similar seat. |
| | Is the front seat forward-rearward free play excessive when compared to a similar seat?<br>**Yes**<br>GO to B3.<br>**No**<br>The front seat frame is operating correctly. Submit Electronic Product Quality Report (EPQR) with any further query. |
| **B3: CHECK REMAINING FRONT SEAT FRAME FIXINGS** | |
| | 1 Remove front seat and/or any seat covers/trim to allow access to check remaining front seat frame fixings are all installed and to the correct torque. |
| | Are all remaining front seat frame fixings installed and to the correct torque?<br>**Yes**<br>Replace front seat frame. Refer to the relevant section of the workshop manual.<br>**No**<br>Install and tighten all remaining front seat frame fixings to correct torque and re-check for excessive free play. |

## PINPOINT TEST C : FRONT SEAT FORWARD-REARWARD MOVEMENT NOISY

| TEST CONDITIONS | DETAILS/RESULTS/ACTIONS |
|---|---|
| **C1: COMPARE FRONT SEAT FORWARD-REARWARD MOVEMENT NOISE TO OTHER FRONT SEAT** | |
| | WARNING: Before work is carried out, make the air bag supplemental restraint system safe. For additional information, refer to Standard Workshop Practices section of workshop manual.<br>1 Compare the front seat forward-rearward movement noise to other front seat. |
| | Is the front seat forward-rearward movement noise excessive when compared to other front seat?<br>**Yes**<br>GO to C2.<br>**No**<br>GO to C3. |
| **C2: COMPARE FRONT SEAT FORWARD-REARWARD MOVEMENT NOISE TO FRONT SEAT IN OTHER VEHICLE** | |
| | 1 Compare the front seat forward-rearward movement noise to front seat in other vehicle. |
| | Is the front seat forward-rearward movement noise excessive when compared to front seat in other vehicle?<br>**Yes**<br>GO to C3.<br>**No**<br>The front seat frame is operating correctly. Submit Electronic Product Quality Report (EPQR) with any further query. |
| **C3: CHECK FOR DEBRIS OBSTRUCTING SEAT MOVEMENT** | |
| | 1 Check for debris obstructing seat movement. |
| | Is the front seat forward-rearward movement obstructed by debris?<br>**Yes**<br>Remove obstruction and re-check for noisy forward-rearward seat movement.<br>**No**<br>GO to C4. |
| **C4: RE-ALIGN FRONT SEAT FRAME** | |
| | 1 Loosen front seat frame fixings. |
| | 2 Set ignition status to 'ON'. |
| | 3 Using the front seat switch pack drive the front seat fully forward then fully rearward. |
| | 4 Tighten front seat frame fixings to the correct torque. |
| | 5 Re-check for noisy seat movement. |
| | Is the front seat forward-rearward movement still noisy?<br>**Yes**<br>GO to C5.<br>**No**<br>The front seat frame is now operating correctly. |
| **C5: CHECK FRONT SEAT FORWARD-REARWARD SEAT MOTOR DRIVE BAR** | |
| | 1 Check front seat drive bar for correct installation and condition. |

GETMANUALS.org

| | |
|---|---|
| | Is the front seat drive bar correctly installed and in a serviceable condition?<br>**Yes**<br>Replace front seat forward-rearward seat motor. Refer to relevant section of workshop manual.<br>**No**<br>Correctly install front seat forward-rearward seat motor drive bar, or replace if required. |

## PINPOINT TEST D : FRONT SEAT HEIGHT, TILT AND/OR SEAT EXTENSION MOTOR MOVEMENT NOT FUNCTIONING

| TEST CONDITIONS | DETAILS/RESULTS/ACTIONS |
|---|---|
| **D1: CHECK FRONT SEAT HEIGHT, TILT OR EXTENSION MOTOR** | |
| • WARNINGS:<br><br>Before work is carried out, make the air bag supplemental restraint system safe. For additional information, refer to Standard Workshop Practices section of workshop manual. | |
| When carrying out the following steps, stand clear of all moving parts and ensure link harness is routed accordingly. | |
| | 1 Set ignition status to ' OFF'. |
| | 2 Disconnect front seat height, tilt or extension motor connector. |
| | • NOTE: It may be that the seat has been driven to the limit of travel along the relevant axis, and when the link harness is connected, the seat will remain in the same position. If this is the case, a jolt may be felt from the motor. To confirm the motor operation, swap the link harness to alternate motor pin connections and the seat should travel in the opposite direction.<br><br>3 Using a locally made fused link harness and power supply, connect power and ground to relevant motor. |

| Battery positive terminal | Battery negative terminal |
|---|---|
| motor pin 1 | motor pin 2 |

| | |
|---|---|
| | Does the motor operate?<br>**Yes**<br>Using manufacturer approved diagnostic system, check for related Diagnostic Trouble Codes (DTCs) and carry out the repair operations specified. Alternatively, refer to the electrical circuit diagrams and check relevant motor circuits.<br>**No**<br>Replace the relevant motor. Refer to relevant section of workshop manual. |

## PINPOINT TEST E : FRONT SEAT HEIGHT, TILT AND/OR EXTENSION MOVEMENT NOISY

| TEST CONDITIONS | DETAILS/RESULTS/ACTIONS |
|---|---|
| **E1: COMPARE THE HEIGHT, TILT OR EXTENSION MOVEMENT NOISE WITH THE OTHER FRONT SEAT** | |
| | WARNING: Before work is carried out, make the air bag supplemental restraint system safe. For additional information, refer to Standard Workshop Practices section of workshop manual.<br><br>1 Compare the front seat movement noise to other front seat. |
| | Is the front seat height, tilt or extension movement noise excessive when compared to other front seat?<br>**Yes**<br>GO to E2.<br>**No**<br>GO to E3. |
| **E2: COMPARE FRONT SEAT HEIGHT, TILT OR EXTENSION MOVEMENT NOISE TO FRONT SEAT IN OTHER VEHICLE** | |
| | 1 Compare the front seat height, tilt or extension movement noise to front seat in other vehicle. |
| | Is the front seat height, tilt or extension movement noise excessive when compared to front seat in other vehicle?<br>**Yes**<br>GO to E3.<br>**No**<br>The front seat frame is operating correctly. Submit Electronic Product Quality Report (EPQR) with any further query. |
| **E3: CHECK FOR DEBRIS OBSTRUCTING SEAT MOVEMENT** | |
| | 1 Check for debris obstructing seat movement. |
| | Is the front seat height, tilt or extension movement obstructed by debris?<br>**Yes**<br>Remove obstruction and re-check for noisy height, tilt or extension seat movement. If still noisy GO to E4.<br>**No**<br>GO to E4. |
| **E4: CHECK FOR HEIGHT, TILT OR EXTENSION MOVEMENT MECHANISM LUBRICATION** | |
| | 1 Check and apply manufacturer approved lubrication to seat height, tilt or extension movement mechanism and re-test for noise. |
| | Is the front seat height, tilt or extension noise still apparent?<br>**Yes**<br>Replace the relevant motor. Refer to relevant section of workshop manual.<br>**No**<br>The front seat height, tilt or extension motor is operating correctly. |

GETtheMANUALS.org

# Seating - Front Seat

Removal and Installation

## Removal

All vehicles

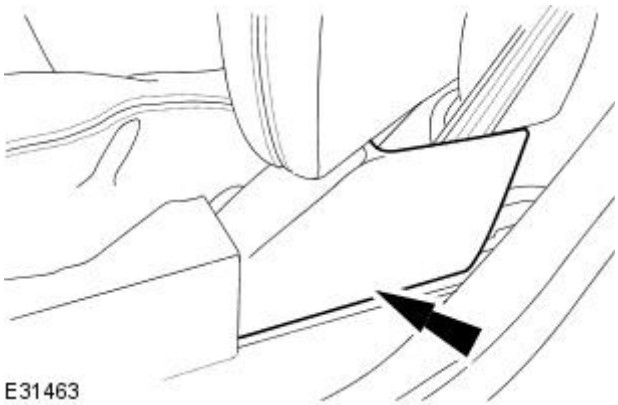


**1.** Remove the front safety belt retaining bolt access panel.

Vehicles built up to 01/2004

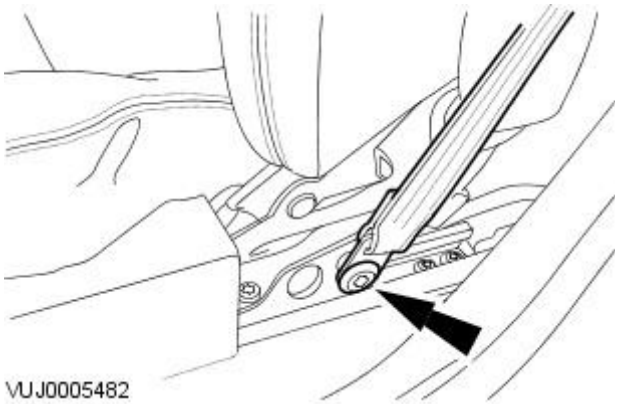


**2.** Detach the front safety belt anchor retaining bolt.

Vehicles built 02/2004 onwards

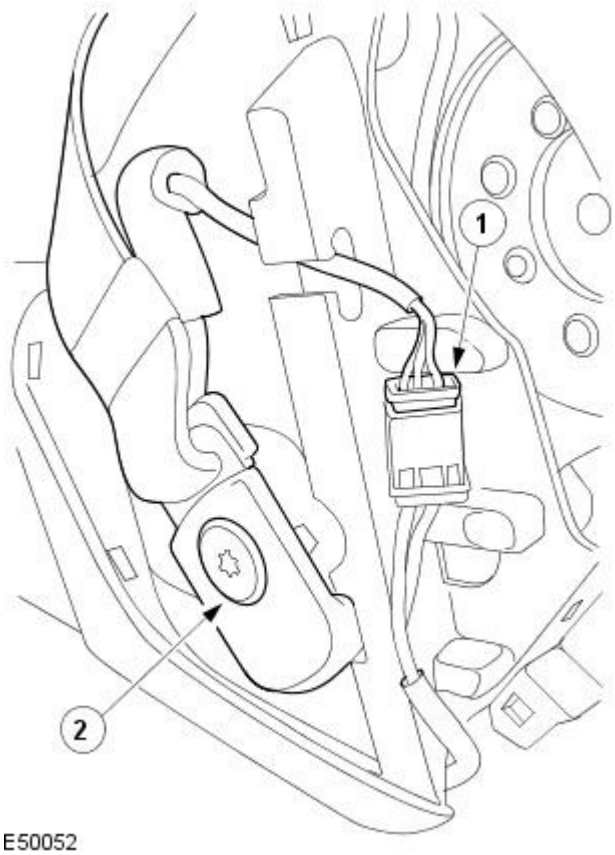


**3.** Detach the front safety belt anchor retaining bolt.

1. Disconnect the electrical connector
2. Detach the front safety belt anchor retaining bolt.

GETtheMANUALS.org

All vehicles

4. Reposition the front seat fully rearwards.
5. Remove both seat runner front retaining bolts.

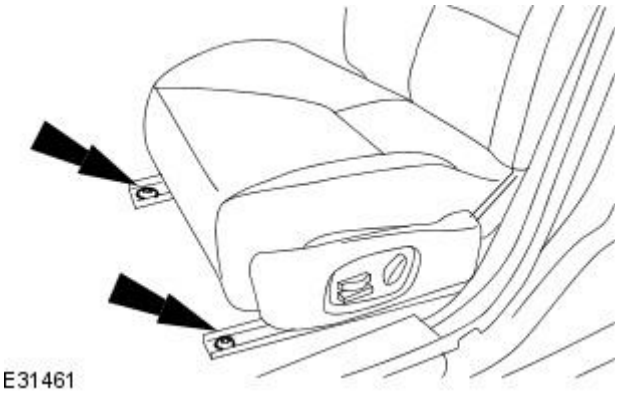
E31461

6. Reposition the front seat fully forwards.
7. Remove both front seat runner trim covers.
   1. Detach the front of the front seat runner trim covers.
   2. Detach the rear of the front seat runner trim covers.
   3. Remove both front seat runner trim covers.

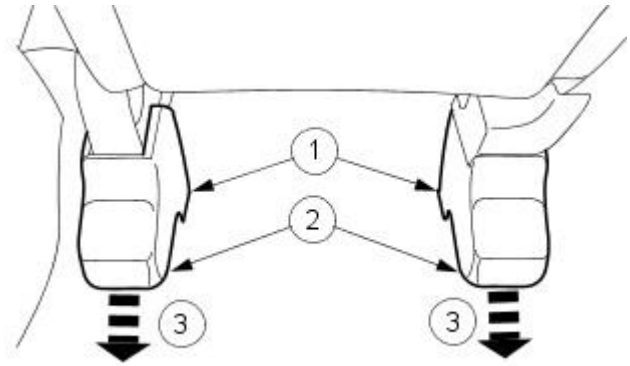

VUJ0001753

8. Remove both seat runner rear retaining bolts.

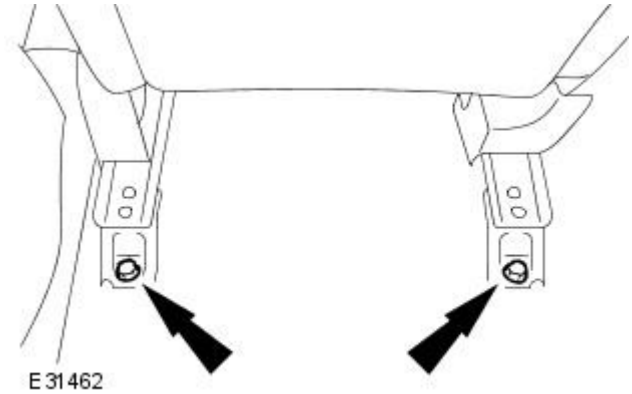
E31462

9. Disconnect the battery ground cable.
   For additional information, refer to: Battery Disconnect and Connect (414-01 Battery, Mounting and Cables, General Procedures).
10. Disconnect the front seat electrical connectors.
    - Tilt the seat rearwards to aid disconnecting the front seat electrical connectors.

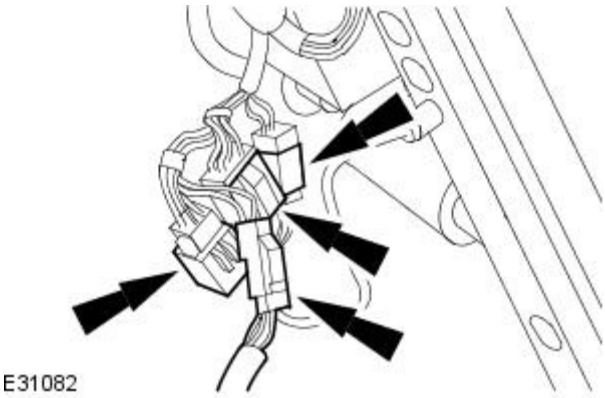
E31082

GETtheMANUALS.org

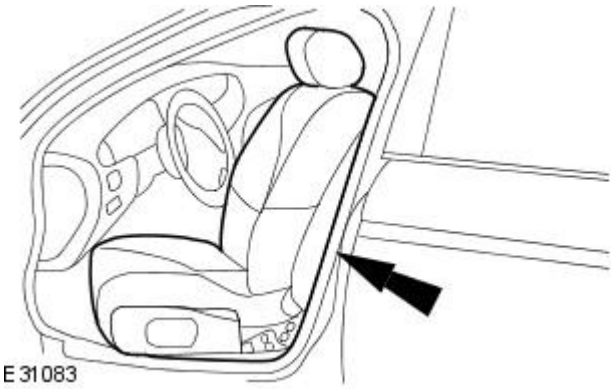


**11.** CAUTIONS:

Make sure not to snag or damage the seat or the trim panels when the seat is removed.

When lifting the seat care must be taken not to load/damage the fore/aft travel track located below the seat cushion.

Remove the front seat.

## Installation

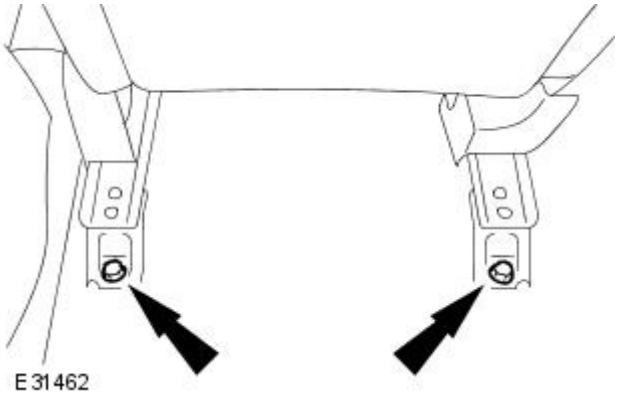


**1.** NOTE: Replace the front seat runner trim covers if the retaining tangs are damaged.

Tighten to 47 Nm.

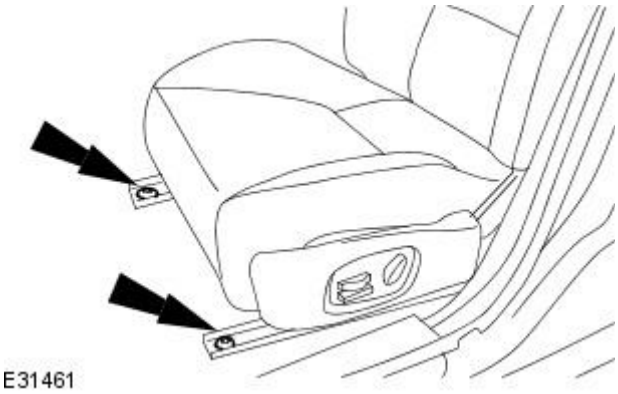


**2.** Tighten to 40 Nm.

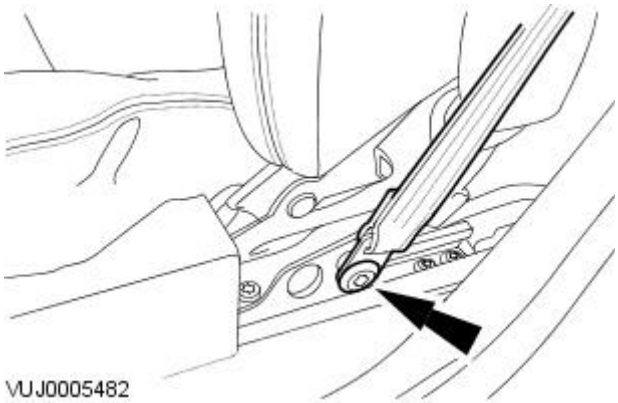


**3.** NOTE: Replace the front safety belt retaining bolt access panel if the retaining tangs are damaged.

To install, reverse the removal procedure.

- Tighten to 35 Nm.

GETtheMANUALS.org

# Seating - Front Seat BackrestVehicles Built From: 02/2004

Removal and Installation

## Removal

• CAUTIONS:

Do not remove or carry out any repairs to the anti-whiplash system (AWS) on the front seat back.

In the event of the AWS operating, there are no serviceable components.

1. Remove the front seat recliner motor.
   For additional information, refer to: Front Seat Recliner Motor (501-10 Seating, Removal and Installation).
2. Disconnect the lumbar support electrical connector.

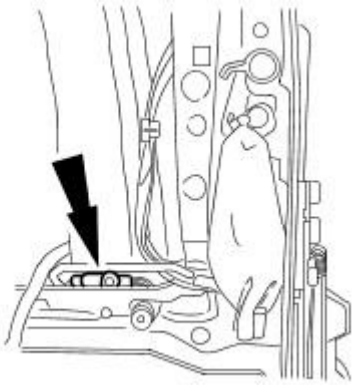

E49417

3. Remove the lumbar support assembly.
   - Remove and discard the lumbar motor retaining clips.

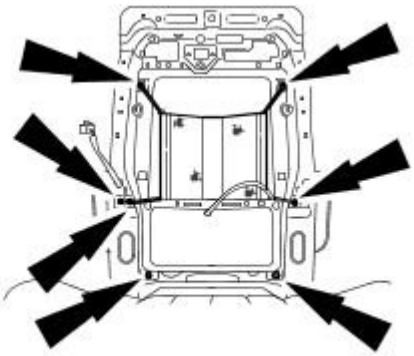

E49418

4. Disconnect the front seat head restraint motor electrical connector (if equipped).

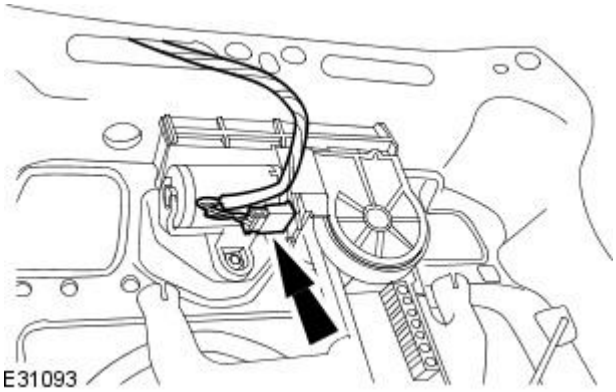

E31093

5. Remove the front seat head restraint motor (if equipped).

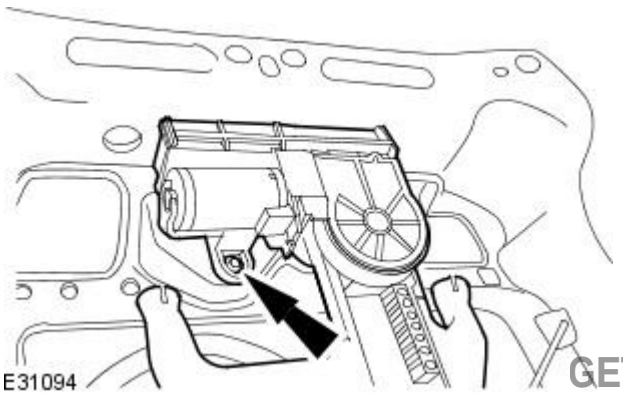

E31094

GETtheMANUALS.org

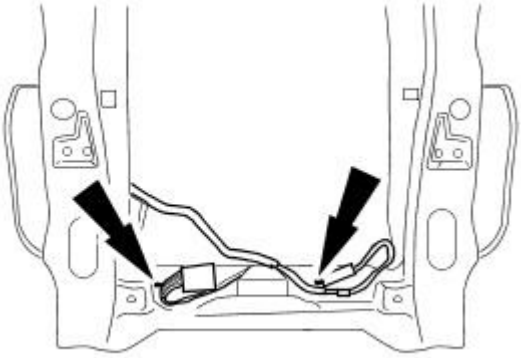

E49419

**6.** Detach the front seat harness.

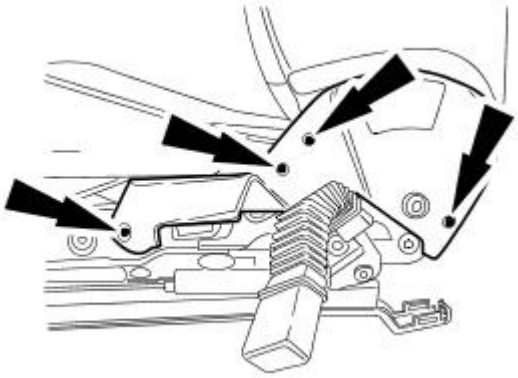

E49421

**7.** NOTE: Left-hand shown, right-hand similar.

Remove the front seat recliner motor trim cover.

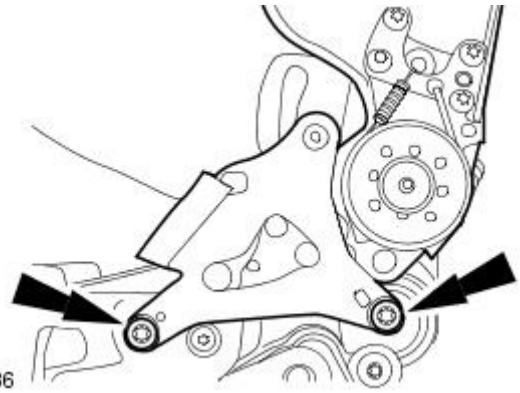

E31086

**8.** NOTE: Left-hand shown, right-hand similar.

Remove the front seat backrest.

- Remove the front seat backrest retaining bolts.

## Installation

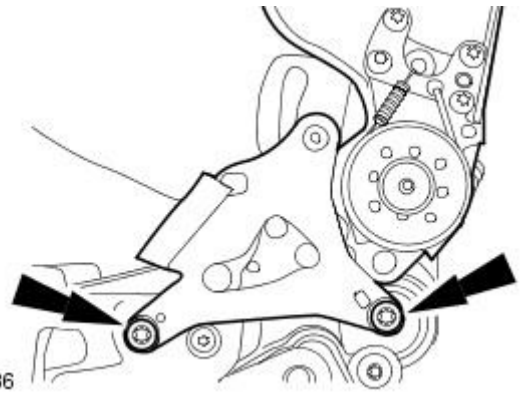

E31086

**1.** NOTE: Left-hand shown, right-hand similar.

• NOTE: Install new lumbar motor retaining clips.

To install, reverse the removal procedure.

- Tighten to 35 Nm.

GETtheMANUALS.org

# Seating - Front Seat BackrestVehicles Built Up To: 01/2004

Removal and Installation

## Removal

• CAUTIONS:

Do not remove or carry out any repairs to the anti-whiplash system (AWS) on the front seat back.

In the event of the AWS operating, there are no serviceable components.

**1.** Remove the front seat recliner motor.
For additional information, refer to: Front Seat Recliner Motor (501-10 Seating, Removal and Installation).

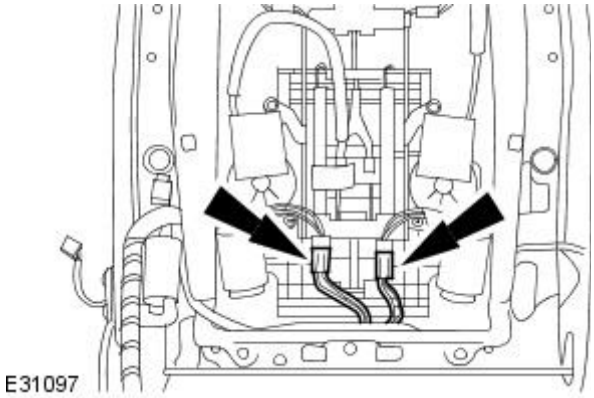
E31097

**2.** CAUTION: Make sure that all trim panels are protected when the seat is removed from the vehicle.

Disconnect the front seat lumbar motor electrical connectors.

**3.** Remove the lumbar motor.

- Remove and discard the front seat lumbar motor retaining clips.

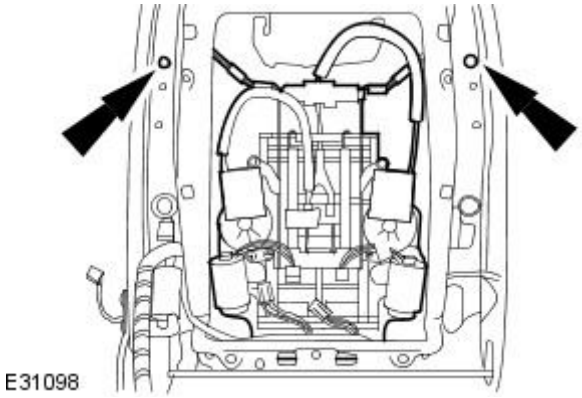
E31098

**4.** Disconnect the front seat head restraint motor electrical connector.

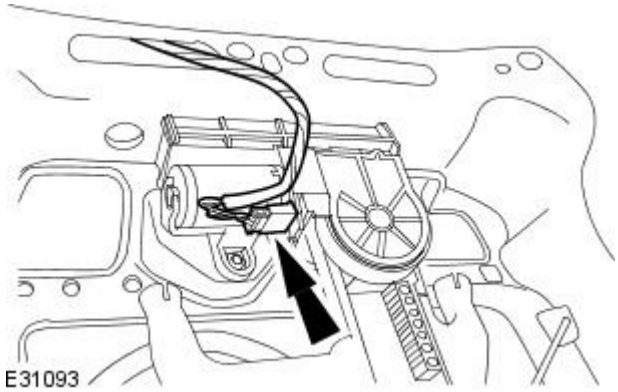
E31093

**5.** Remove the front seat head restraint motor.

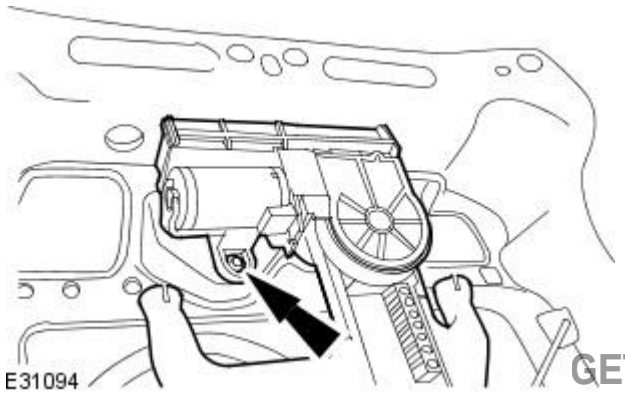
E31094

GETtheMANUALS.org

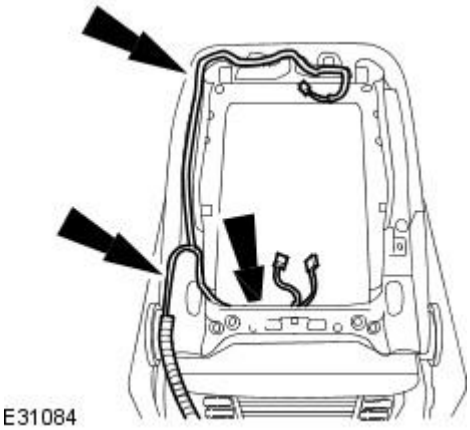


**6.** Detach the front seat harness.

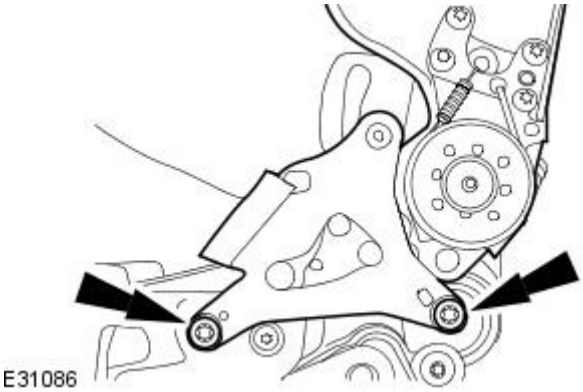


**7.** NOTE: Left-hand shown, right-hand similar.

Remove the front seat backrest.

- Remove the front seat backrest retaining bolts.

## Installation

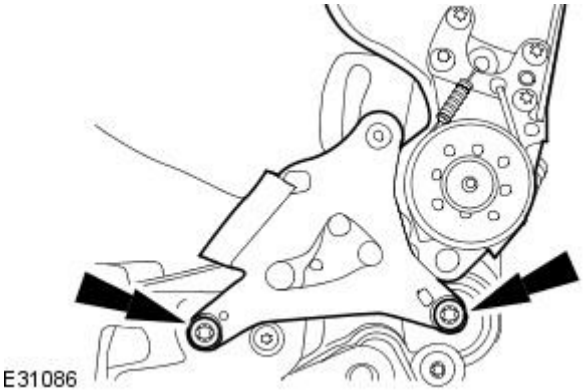


**1.** NOTE: Left-hand shown, right-hand similar.

To install, reverse the removal procedure.

- Tighten to 35 Nm.

GETtheMANUALS.org

# Seating - Front Seat Backrest Cover

Removal and Installation

## Removal

All vehicles

**1.** WARNINGS:

A restraints control module (RCM) only requires replacement if the system has incurred five separate deployments. At no time change the RCM for less than five separate deployments.

Always wear safety glasses when repairing an air bag supplemental restraint system (SRS) vehicle and when handling an air bag module. Failure to follow this instruction may result in personal injury.

Carry a live air bag module with the air bag and trim cover pointed away from your body. This will reduce the risk of injury in the event of an accidental deployment. Failure to follow this instruction may result in personal injury.

Do not set a live air bag module down with the trim cover face down. Failure to follow this instruction may result in personal injury.

After deployment, the air bag surface can contain deposits of sodium hydroxide, a product of the gas generant combustion that is irritating to the skin. Wash your hands with soap and water afterwards. Failure to follow this instruction may result in personal injury.

Never probe the connectors on the air bag module. Doing so may result in air bag deployment. Failure to follow this instruction may result in personal injury.

Vehicle sensor orientation is critical for correct system operation. If a vehicle equipped with an air bag SRS is involved in a collision, inspect the sensor mounting bracket and wiring pigtail for deformation. If damaged, replace the sensor whether or not the air bag is deployed.

To avoid accidental deployment and possible personal injury, the backup power supply must be depleted before repairing or replacing any air bag SRS components. To deplete the backup power supply energy, disconnect the battery ground cable and wait one minute. Failure to follow this instruction may result in personal injury.

• NOTE: Repair is made by replacement only. If a part is replaced and the new part does not correct the condition, install the original part and carry out the diagnostic procedure again.

• NOTE: When installing a new air bag module, a prepaid return postcard is provided with the replacement air bag module. The serial number for the new part and the vehicle identification number (VIN) must be recorded and sent to Jaguar Cars Ltd.

Remove the front seat.
For additional information, refer to: Front Seat (501-10 Seating, Removal and Installation).

**2.** Remove the front seat head restraint.

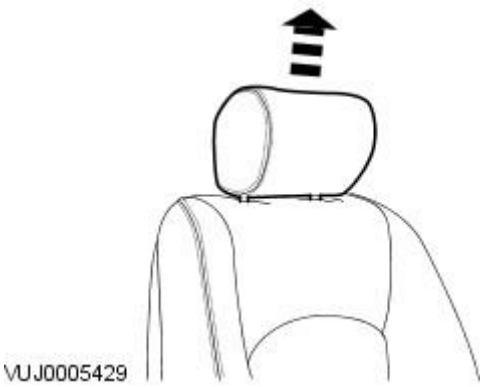


Vehicles built up to 01/2004

GETtheMANUALS.org

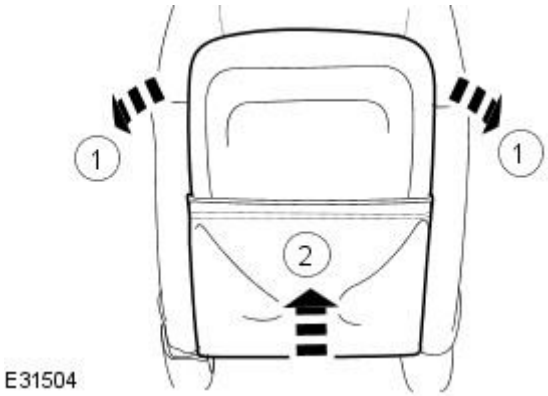


**3.** Detach the front seat backrest trim panel.

1. Detach the top edge of the front seat backrest trim panel.
2. Detach the front seat backrest trim panel.

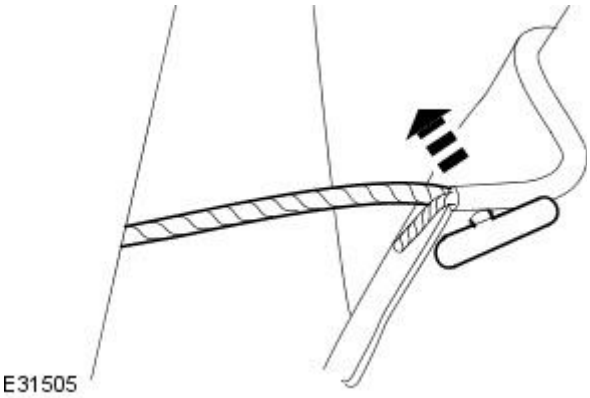


**4.** Detach the front seat backrest trim panel retaining strap.

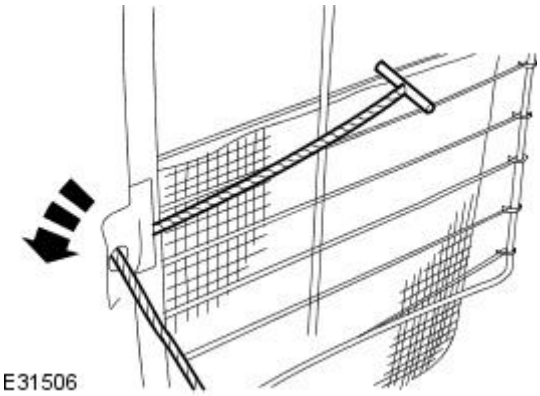


**5.** Remove the front seat backrest trim panel.

- Pass the front seat backrest trim panel retaining strap through the front seat backrest.

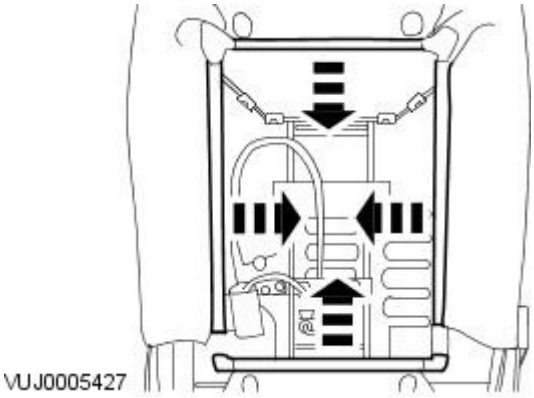


**6.** Detach the front seat backrest cover.

Vehicles built 02/2004 onwards

GETtheMANUALS.org

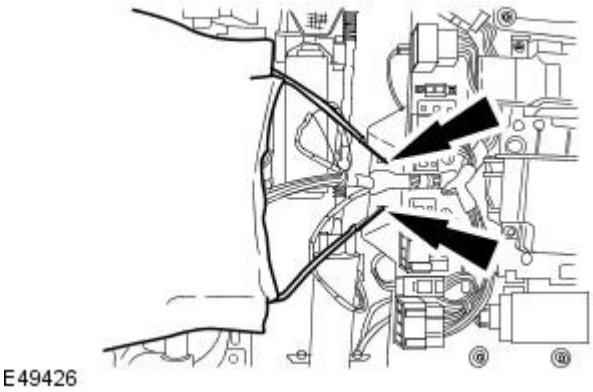


**7.** Detach the front seat backrest cover retaining strap.

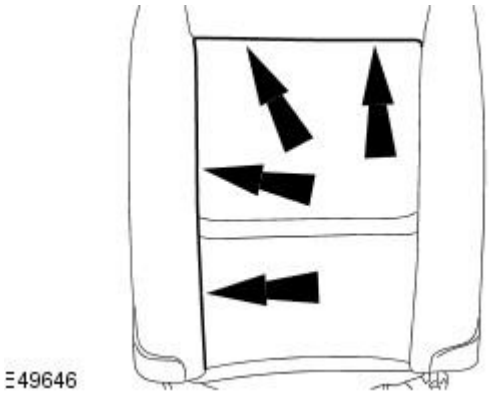


**8.** Detach the front seat backrest cover.

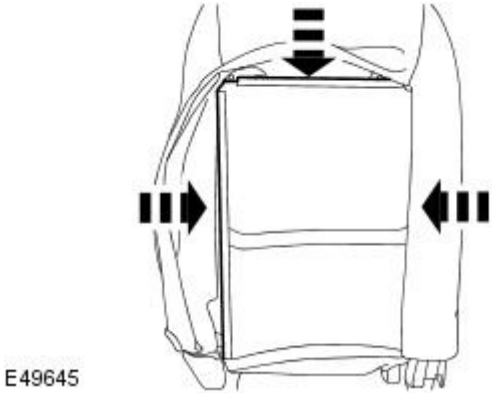


**9.** Detach the front seat backrest cover.

All vehicles

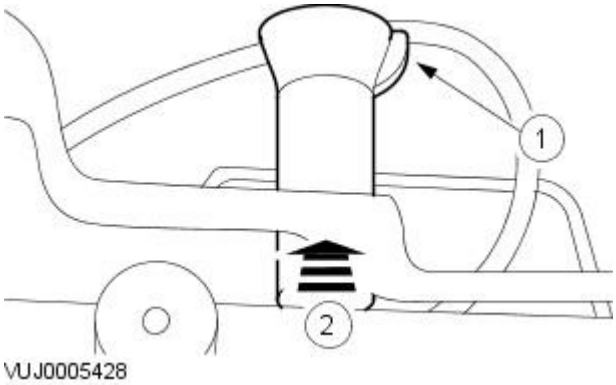


**10.** NOTE: Left-hand shown, right-hand similar.

Remove the head restraint retaining post.

1. Release the retaining tang.
2. Remove the head restraint retaining post.

GETtheMANUALS.org

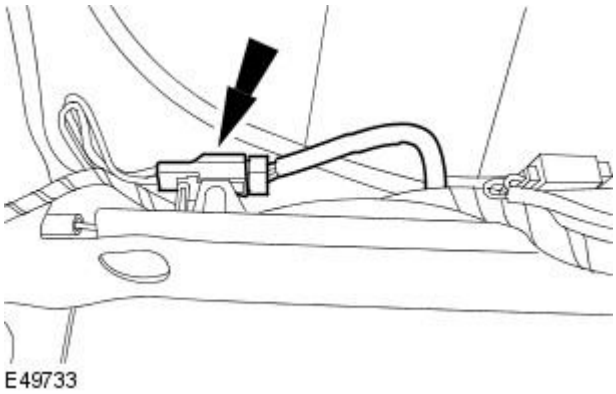


**11.** Disconnect the front seat backrest heater electrical connector (if equipped).

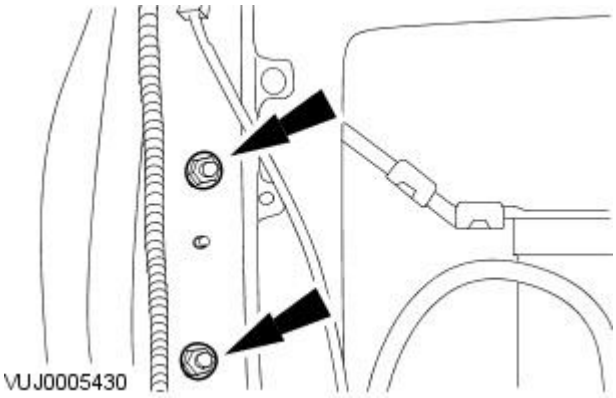


**12.** Remove the side air bag module retaining nuts.

**13.** Detach the seat backrest cover and cushion.

1. Reposition the seat backrest cover and cushion.
2. Detach the seat backrest cover and cushion.

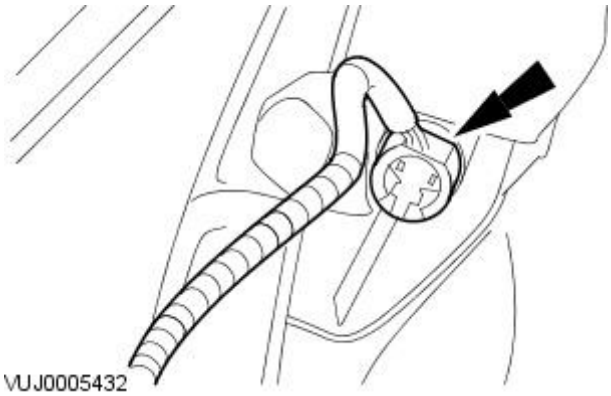


**14.** Disconnect the side air bag module electrical connector.

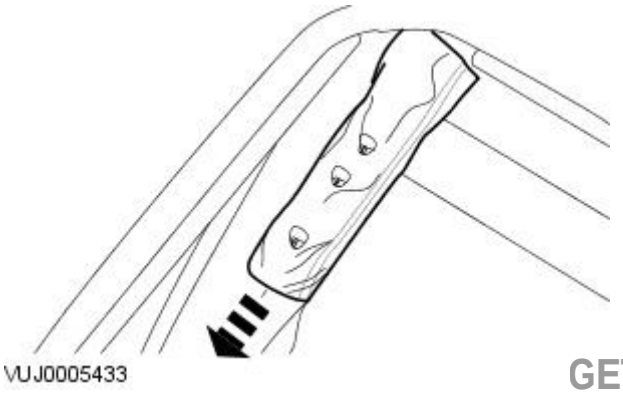


**15.** Remove the side air bag module.

GETtheMANUALS.org

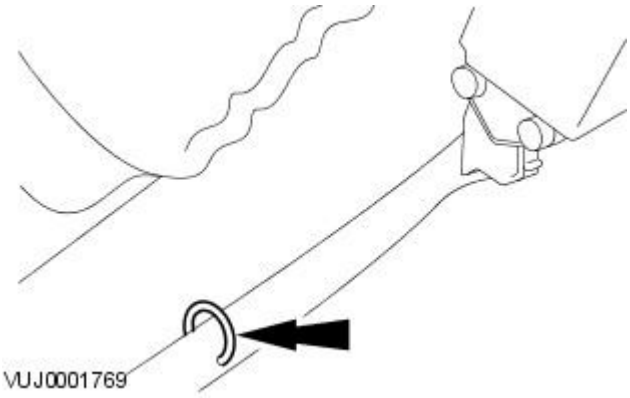


**16.** Cut the hog rings.

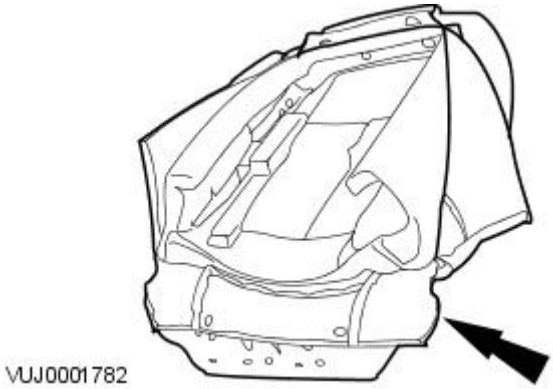


**17.** Remove the front seat backrest cover.

## Installation

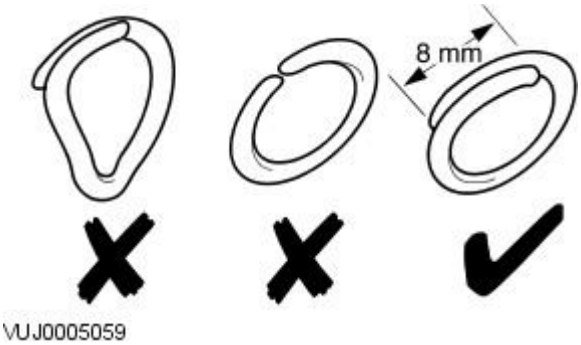


**1.** NOTE: Install new hog rings. Use hog ring pliers to close the hog rings. Do not use any other tool. The hog rings must be closed to overlap as illustrated.

To install, reverse the removal procedure.

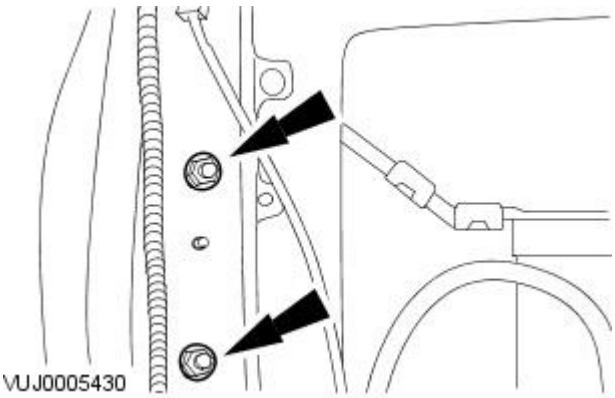


**2.** Tighten to 7 Nm.

GETtheMANUALS.org

# Seating - Front Seat Cushion CoverVehicles Built From: 02/2004

Removal and Installation

## Removal

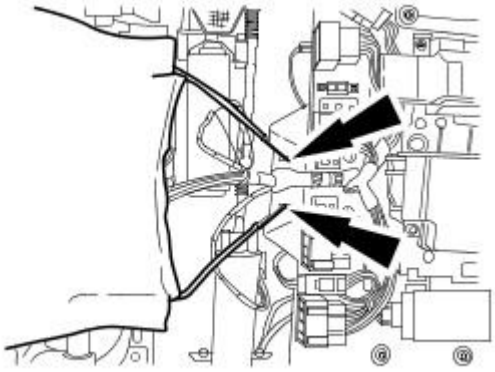

E49426

1. Remove the seat control switch.
   For additional information, refer to: Seat Control Switch (501-10 Seating, Removal and Installation).
2. Detach the front seat backrest cover retaining cords.

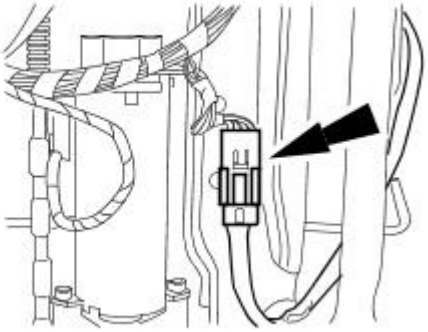

E49427

3. Disconnect the front seat cushion heater electrical connector (if equipped).

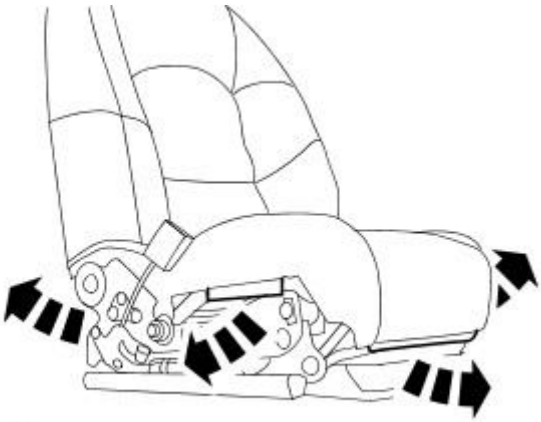

E31088

4. Remove the front seat cushion and cushion cover.
   - Detach the front seat cushion cover retaining clips.

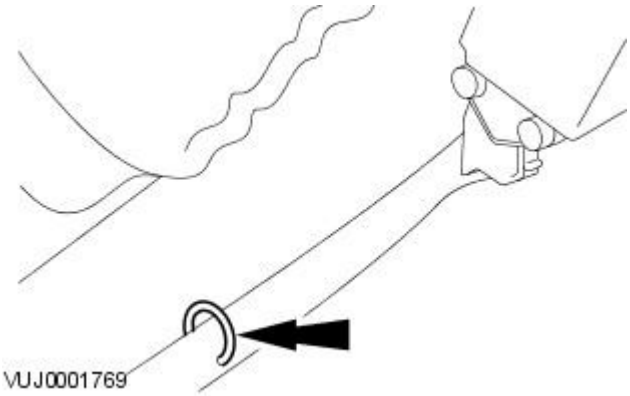

VUJ0001769

5. Remove the front seat cushion cover.
   - Cut the hog rings.

## Installation

GETtheMANUALS.org

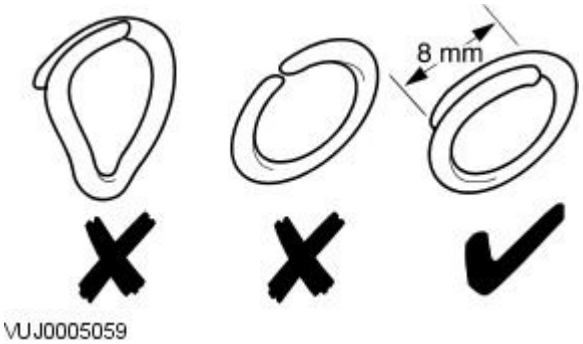


**1.** NOTE: Install new hog rings. Use hog ring pliers to close the hog rings. Do not use any other tool. The hog rings must be closed to overlap as illustrated.

To install, reverse the removal procedure.

GETtheMANUALS.org

# Seating - Front Seat Cushion CoverVehicles Built Up To: 01/2004

Removal and Installation

## Removal

All Vehicles

1. Remove the seat control switch.
   For additional information, refer to Seat Control Switch in this section.

Vehicles with Heated Seats

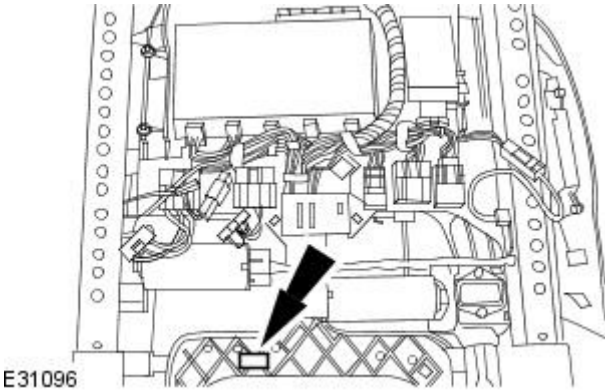


2. Disconnect the front seat cushion heater electrical connector.

All Vehicles

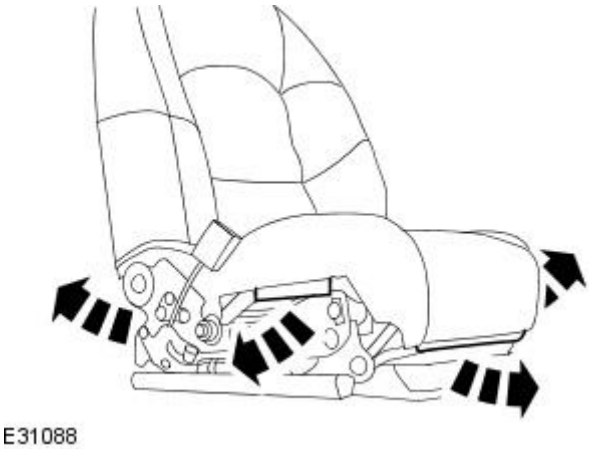


3. Remove the front seat cushion and cushion cover.
   - Detach the front seat cushion cover retaining clips.

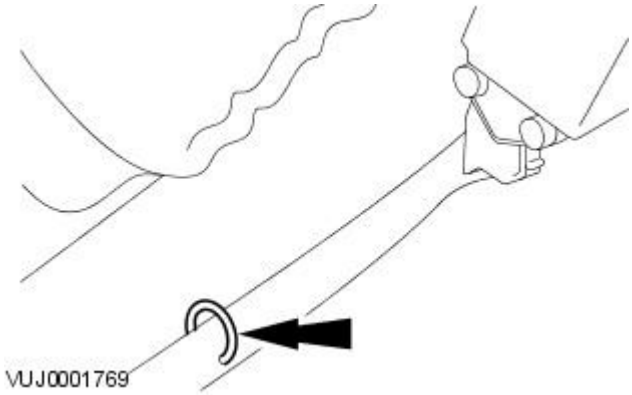


4. Remove the front seat cushion cover.
   - Remove the front seat cushion cover retaining clips.

## Installation

1. NOTE: Install new front seat cushion cover retaining clips.

   To install, reverse the removal procedure.

GETtheMANUALS.org

# Seating - Front Seat Head Restraint Motor

Removal and Installation

## Removal

All vehicles

**1.** WARNINGS:

A restraints control module (RCM) only requires replacement if the system has incurred five separate deployments. At no time change the RCM for less than five separate deployments.

Always wear safety glasses when repairing an air bag supplemental restraint system (SRS) vehicle and when handling an air bag module. Failure to follow this instruction may result in personal injury.

Carry a live air bag module with the air bag and trim cover pointed away from your body. This will reduce the risk of injury in the event of an accidental deployment. Failure to follow this instruction may result in personal injury.

Do not set a live air bag module down with the trim cover face down. Failure to follow this instruction may result in personal injury.

After deployment, the air bag surface can contain deposits of sodium hydroxide, a product of the gas generant combustion that is irritating to the skin. Wash your hands with soap and water afterwards. Failure to follow this instruction may result in personal injury.

Never probe the connectors on the air bag module. Doing so may result in air bag deployment. Failure to follow this instruction may result in personal injury.

Vehicle sensor orientation is critical for correct system operation. If a vehicle equipped with an air bag SRS is involved in a collision, inspect the sensor mounting bracket and wiring pigtail for deformation. If damaged, replace the sensor whether or not the air bag is deployed.

To avoid accidental deployment and possible personal injury, the backup power supply must be depleted before repairing or replacing any air bag SRS components. To deplete the backup power supply energy, disconnect the battery ground cable and wait one minute. Failure to follow this instruction may result in personal injury.

• NOTE: Repair is made by replacement only. If a part is replaced and the new part does not correct the condition, install the original part and carry out the diagnostic procedure again.

• NOTE: When installing a new air bag module, a prepaid return postcard is provided with the replacement air bag module. The serial number for the new part and the vehicle identification number (VIN) must be recorded and sent to Jaguar Cars Ltd.

Remove the front seat.
For additional information, refer to: Front Seat (501-10 Seating, Removal and Installation).

**2.** Remove the front seat head restraint.

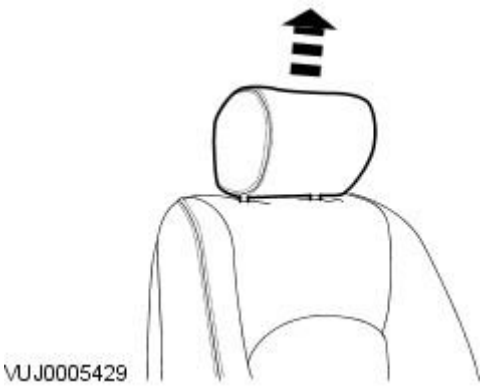


Vehicles built up to 01/2004

GETtheMANUALS.org

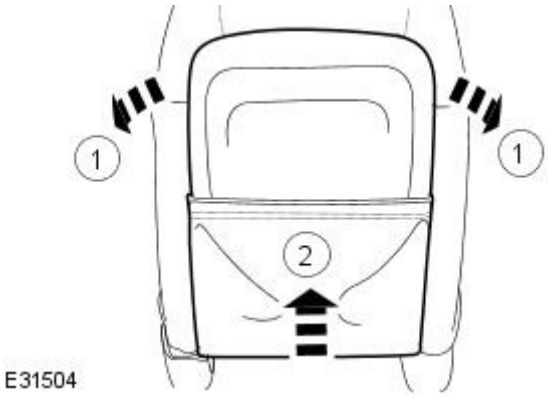


**3.** Detach the front seat backrest trim panel.

1. Detach the top edge of the front seat backrest trim panel.
2. Detach the front seat backrest trim panel.

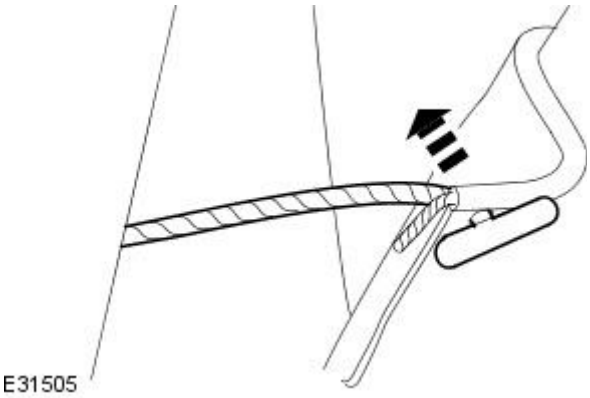


**4.** Detach the front seat backrest trim panel retaining strap.

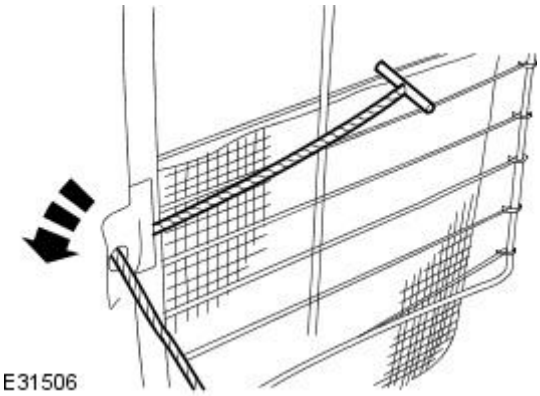


**5.** Remove the front seat backrest trim panel.

- Pass the front seat backrest trim panel retaining strap through the front seat backrest.

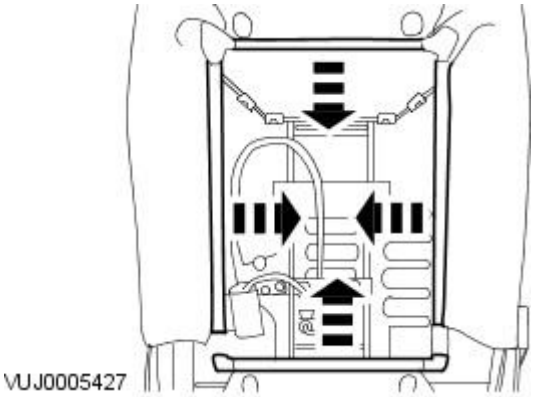


**6.** Detach the front seat backrest cover.

Vehicles built 02/2004 onwards

GETtheMANUALS.org

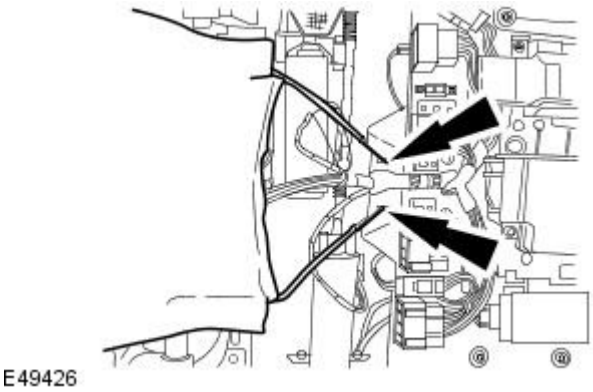


**7.** Detach the front seat backrest cover retaining strap.

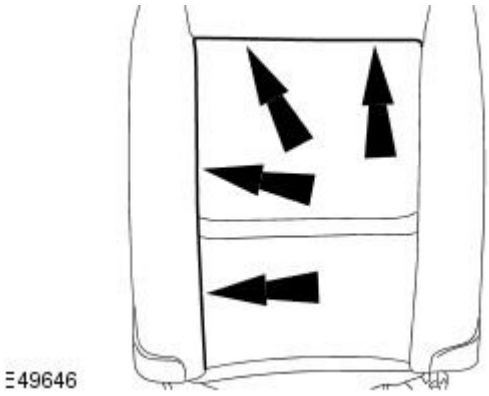


**8.** Detach the front seat backrest cover.

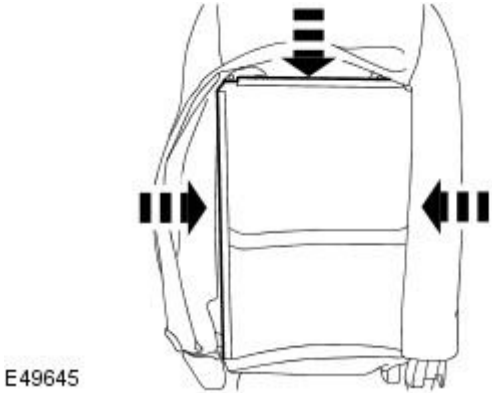


**9.** Detach the front seat backrest cover.

All vehicles

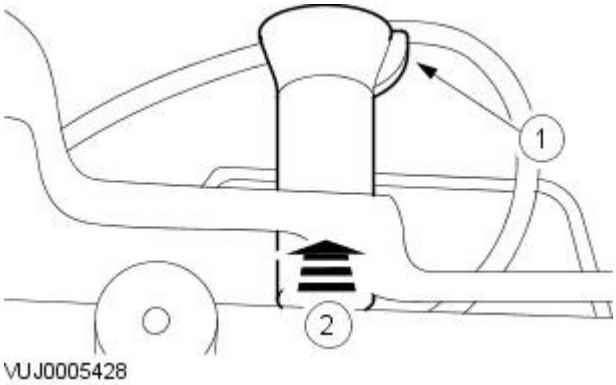


**10.** NOTE: left-hand shown, right-hand similar.

Remove the front seat head restraint retaining post.

1. Release the retaining tang.
2. Remove the front seat head restraint retaining post.

GETtheMANUALS.org

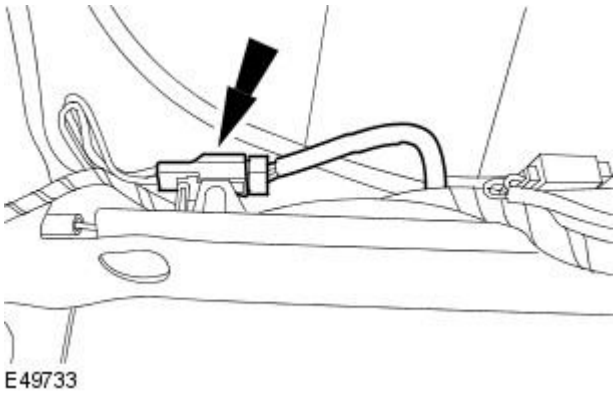


**11.** Disconnect the front seat backrest heater electrical connector (if equipped).

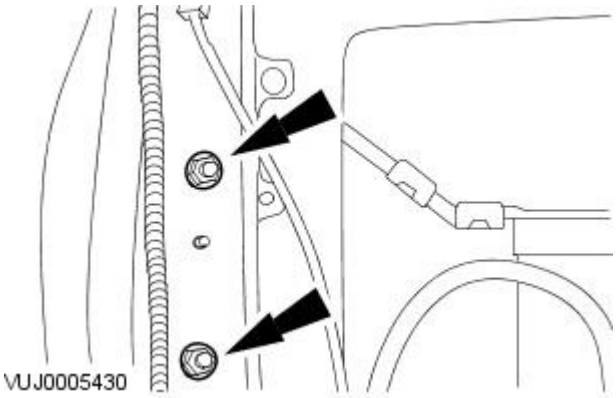


**12.** Remove the side air bag module retaining nuts.

**13.** Detach the front seat backrest cover and cushion.

1. Reposition the front seat backrest cover and cushion.
2. Detach the front seat backrest cover and cushion.

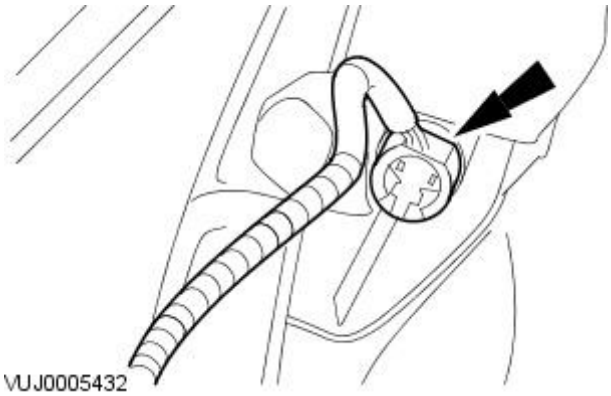


**14.** Disconnect the side air bag module electrical connector.

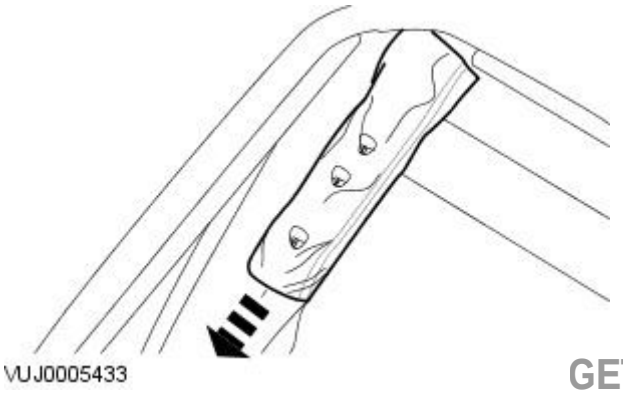


**15.** Remove the side air bag module.

GETtheMANUALS.org

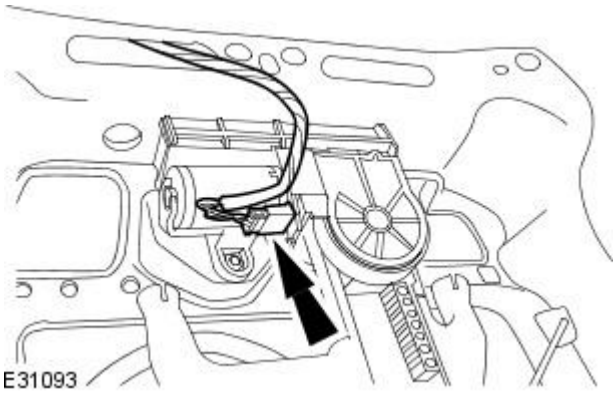


**16.** Disconnect the front seat head restraint motor electrical connector.

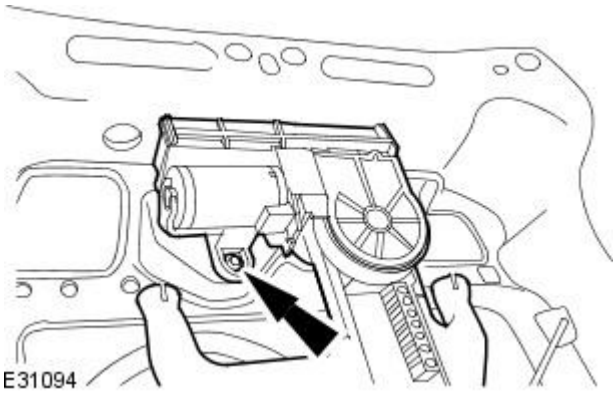


**17.** Remove the front seat head restraint motor.

## Installation

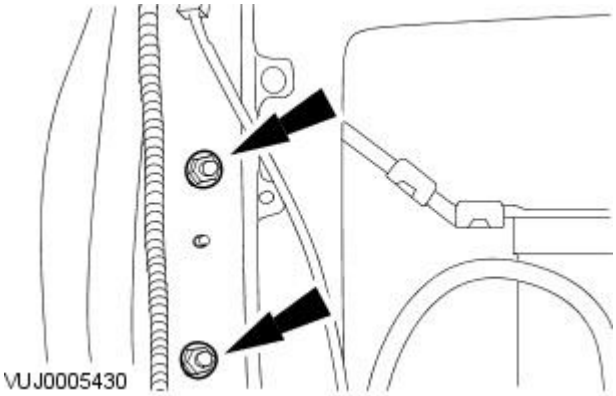


**1.** To install, reverse the removal procedure.

1. Tighten to 7 Nm.

GETtheMANUALS.org

# Seating - Front Seat Height Adjustment Motor

Removal and Installation

## Removal

1. Remove the front seat.
   For additional information, refer to: Front Seat (501-10 Seating, Removal and Installation).
2. Detach the front seat cushion cover retaining hooks.

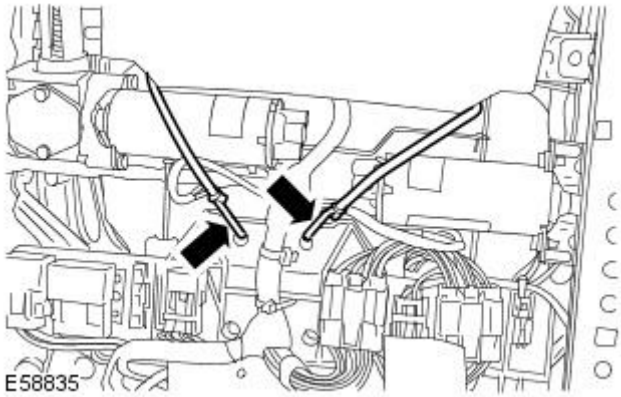


3. Remove the retaining screws.

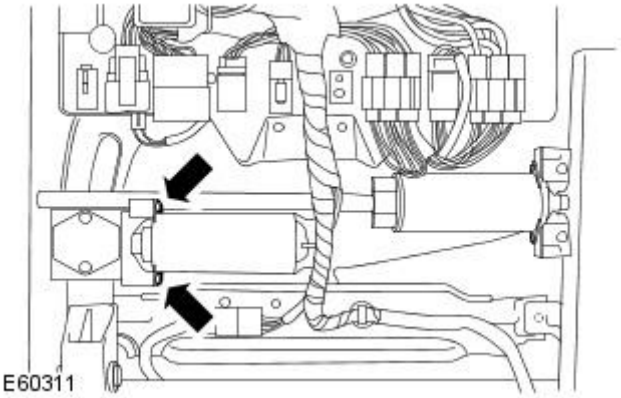


4. Detach the front seat height adjustment motor.

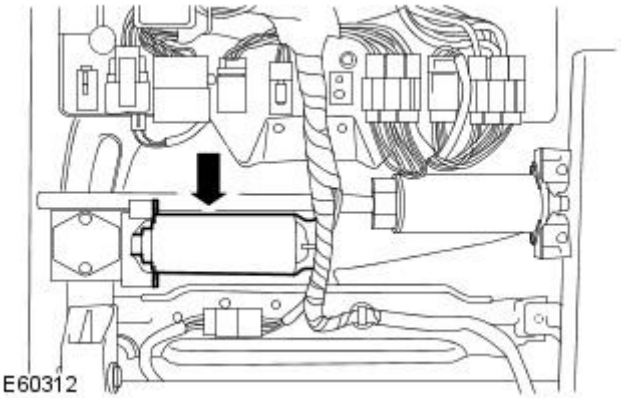


5. Remove the front seat height adjustment motor.
   - Disconnect the electrical connector.

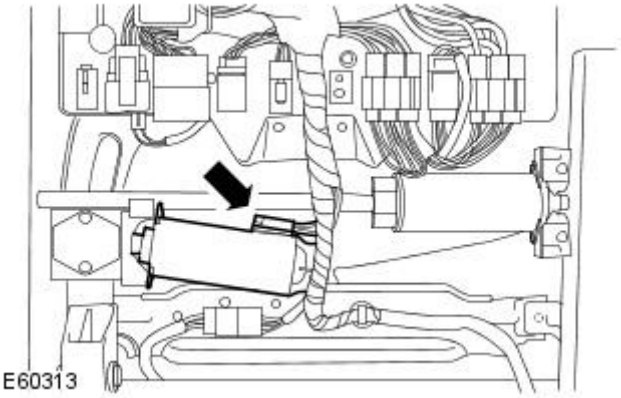


GETtheMANUALS.org

## Installation

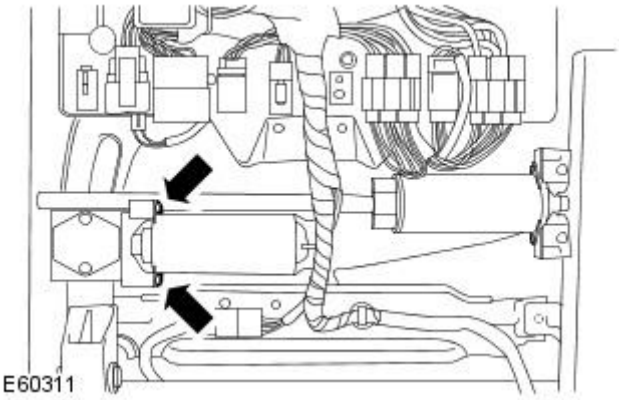


**1.** To install, reverse the removal procedure.

- Tighten to 5 Nm.

GETtheMANUALS.org

# Seating - Front Seat Recliner Motor

Removal and Installation

## Removal

All vehicles

**1.** WARNINGS:

A restraints control module (RCM) only requires replacement if the system has incurred five separate deployments. At no time change the RCM for less than five separate deployments.

Always wear safety glasses when repairing an air bag supplemental restraint system (SRS) vehicle and when handling an air bag module. Failure to follow this instruction may result in personal injury.

Carry a live air bag module with the air bag and trim cover pointed away from your body. This will reduce the risk of injury in the event of an accidental deployment. Failure to follow this instruction may result in personal injury.

Do not set a live air bag module down with the trim cover face down. Failure to follow this instruction may result in personal injury.

After deployment, the air bag surface can contain deposits of sodium hydroxide, a product of the gas generant combustion that is irritating to the skin. Wash your hands with soap and water afterwards. Failure to follow this instruction may result in personal injury.

Never probe the connectors on the air bag module. Doing so may result in air bag deployment. Failure to follow this instruction may result in personal injury.

Vehicle sensor orientation is critical for correct system operation. If a vehicle equipped with an air bag SRS is involved in a collision, inspect the sensor mounting bracket and wiring pigtail for deformation. If damaged, replace the sensor whether or not the air bag is deployed.

To avoid accidental deployment and possible personal injury, the backup power supply must be depleted before repairing or replacing any air bag SRS components. To deplete the backup power supply energy, disconnect the battery ground cable and wait one minute. Failure to follow this instruction may result in personal injury.

• NOTE: Repair is made by replacement only. If a part is replaced and the new part does not correct the condition, install the original part and carry out the diagnostic procedure again.

• NOTE: When installing a new air bag module, a prepaid return postcard is provided with the replacement air bag module. The serial number for the new part and the vehicle identification number (VIN) must be recorded and sent to Jaguar Cars Ltd.

Remove the front seat.
For additional information, refer to: Front Seat (501-10 Seating, Removal and Installation).

**2.** Remove the front seat head restraint.

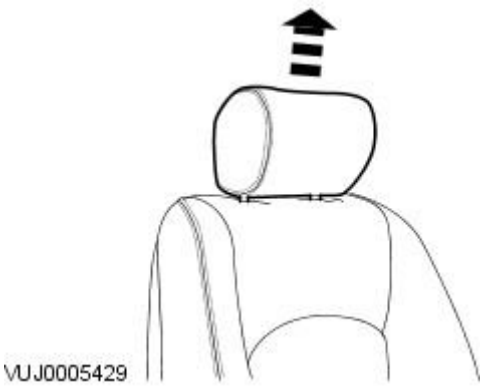


Vehicles built up to 01/2004

GETtheMANUALS.org

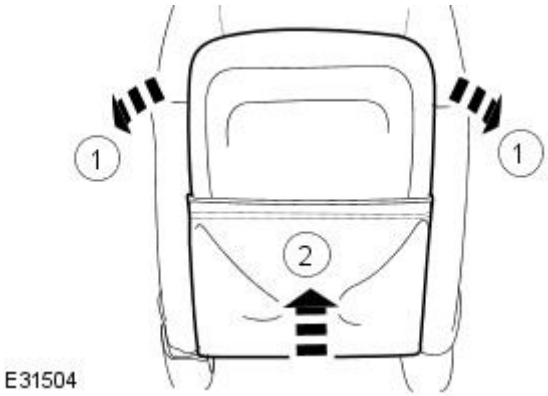


**3.** Detach the front seat backrest trim panel.

1. Detach the top edge of the front seat backrest trim panel.
2. Detach the front seat backrest trim panel.

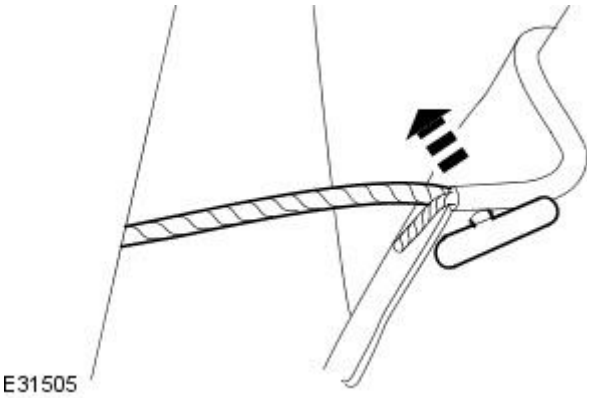


**4.** Detach the front seat backrest trim panel retaining strap.

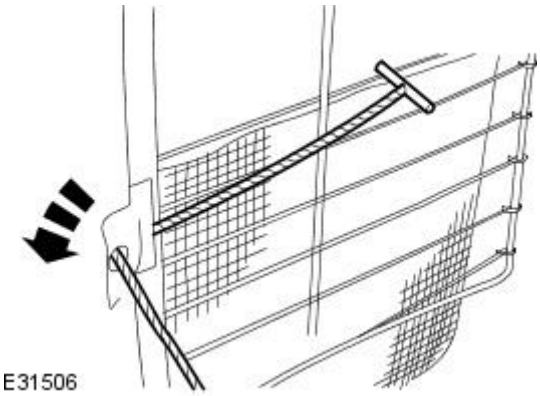


**5.** Remove the front seat backrest trim panel.

- Pass the front seat backrest trim panel retaining strap through the front seat backrest.

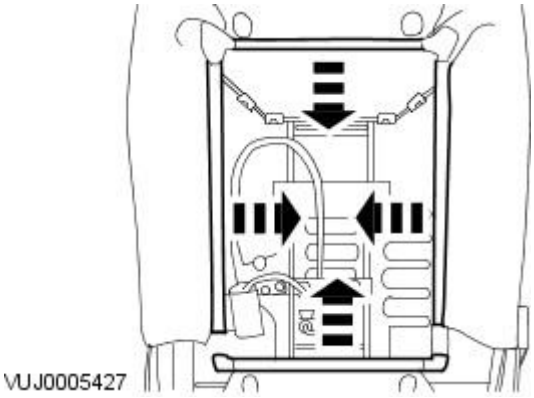


**6.** Detach the front seat backrest cover.

Vehicles built 02/2004 onwards

GETtheMANUALS.org

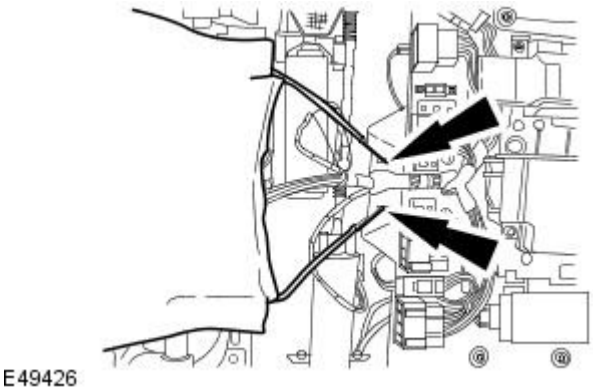


**7.** Detach the front seat backrest cover retaining strap.

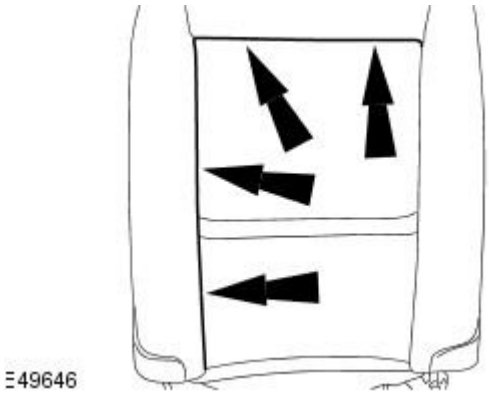


**8.** Detach the front seat backrest cover.

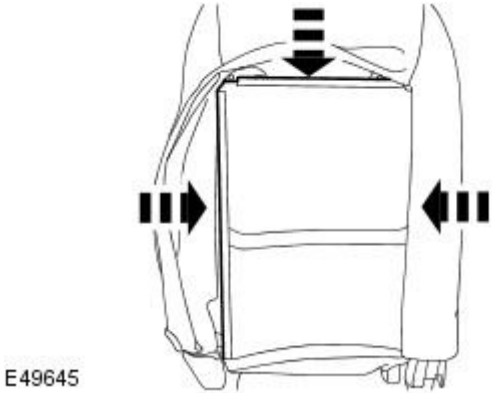


**9.** Detach the front seat backrest cover.

All vehicles

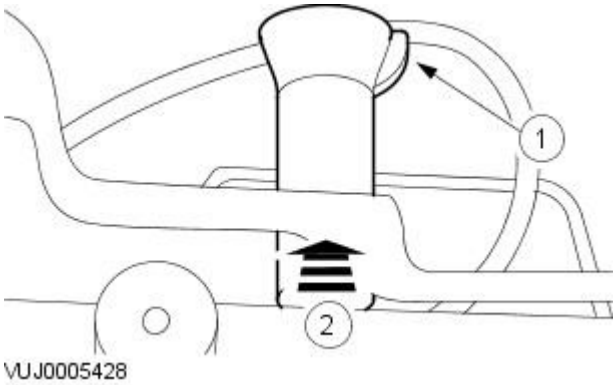


**10.** NOTE: Left-hand shown, right-hand similar.

Remove the head restraint retaining post.

1. Release the retaining tang.
2. Remove the head restraint retaining post.

GETtheMANUALS.org

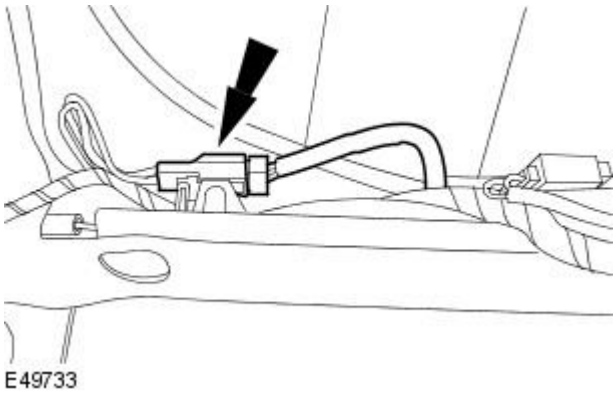


**11.** Disconnect the front seat backrest heater electrical connector (if equipped).

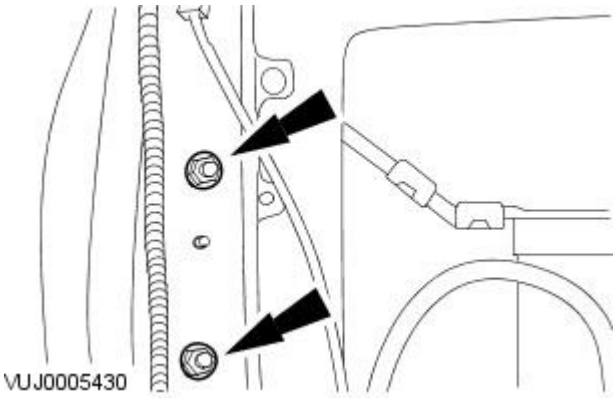


**12.** Remove the side air bag module retaining nuts.

**13.** Detach the seat backrest cover and cushion.

1. Reposition the seat backrest cover and cushion.
2. Detach the seat backrest cover and cushion.

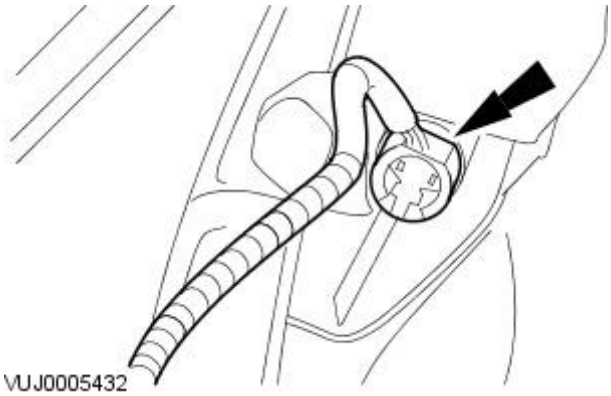


**14.** Disconnect the side air bag module electrical connector.

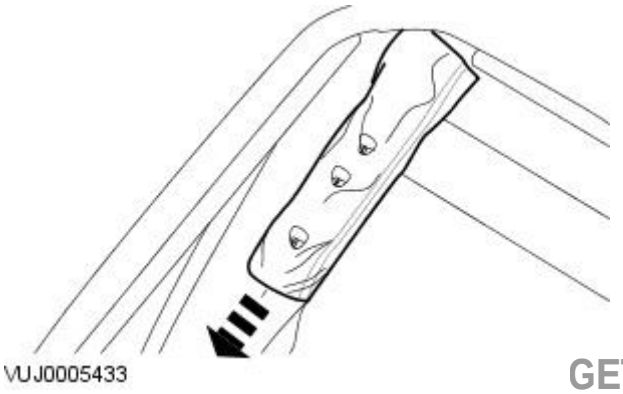


**15.** Remove the side air bag module.

GETtheMANUALS.org

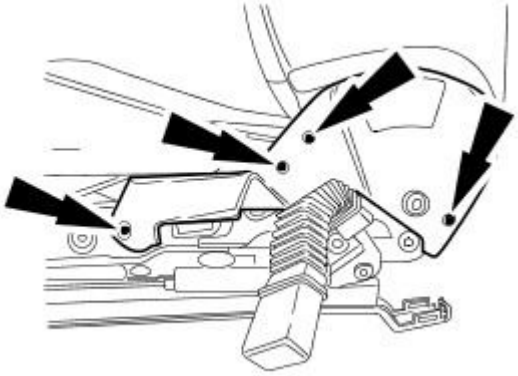
E49421

**16.** NOTE: Left-hand shown, right-hand similar.

Remove the front seat recliner motor trim cover.

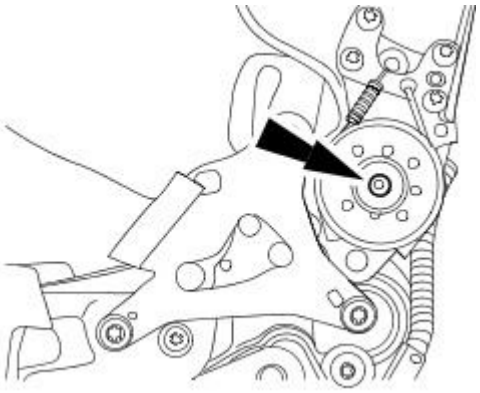
E31089

**17.** CAUTION: Do not remove or carry out any repairs to the anti-whiplash system (AWS) on the front seat back.

Remove the front seat recliner motor shaft retaining nut.

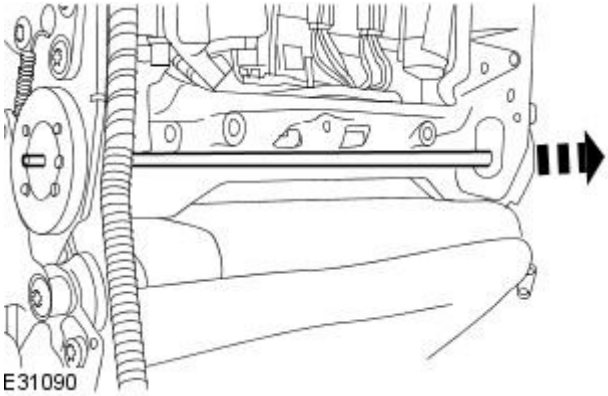
E31090

**18.** Remove the front seat recliner motor shaft.

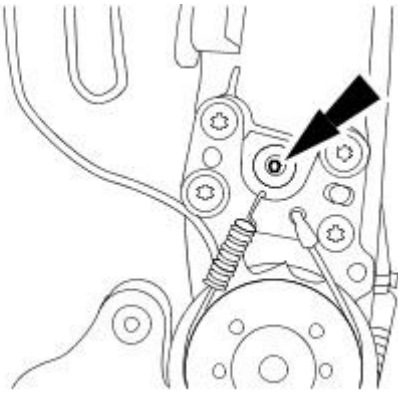
E31091

**19.** Remove the front seat recliner motor retaining nut.

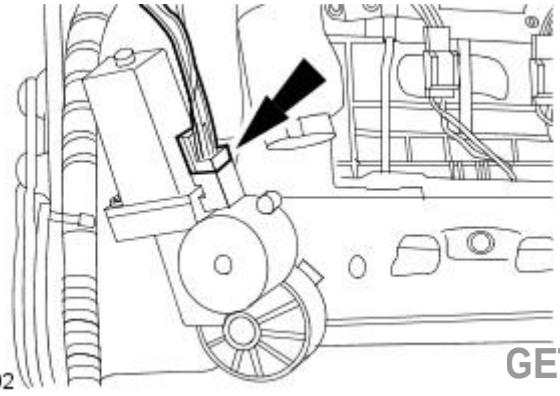
E31092

**20.** Remove the front seat recliner motor.

- Disconnect the front seat recliner motor electrical connector.

GETtheMANUALS.org

## Installation

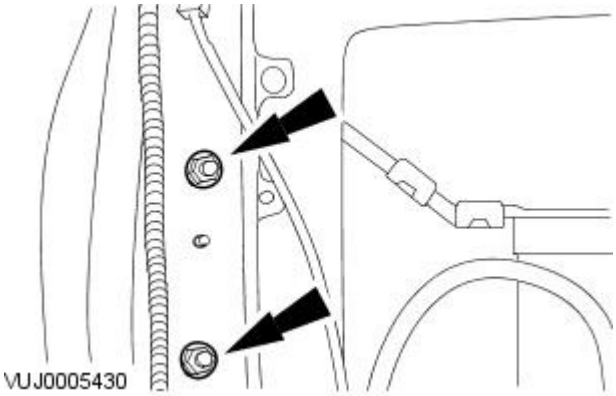


**1.** To install, reverse the removal procedure.

1. Tighten to 7 Nm.

GETtheMANUALS.org

# Seating - Front Seat Track Motor

Removal and Installation

## Removal

1. Remove the front seat.
   For additional information, refer to: Front Seat (501-10 Seating, Removal and Installation).
2. Detach the front seat cusion cover retaining hooks.

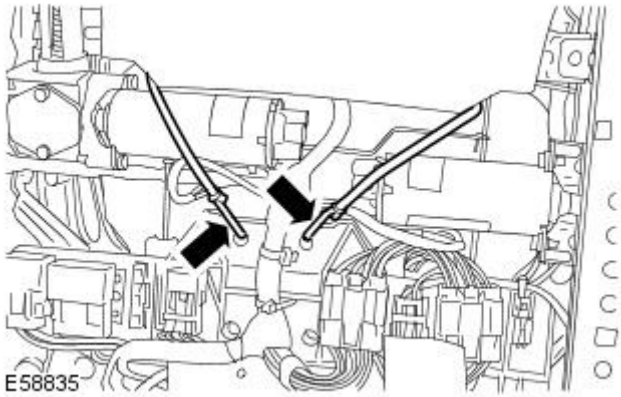


3. Remove the retaining screws.

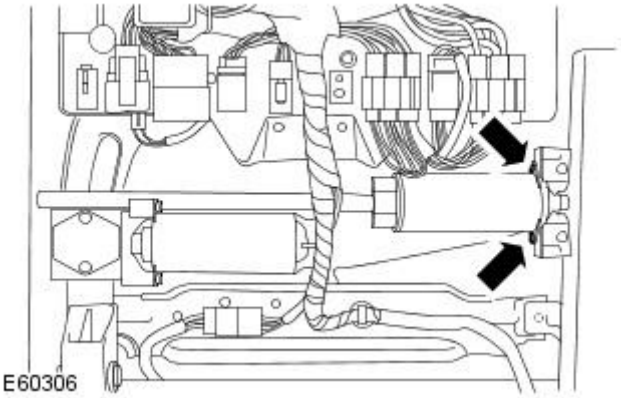


4. Detach the front seat track motor.

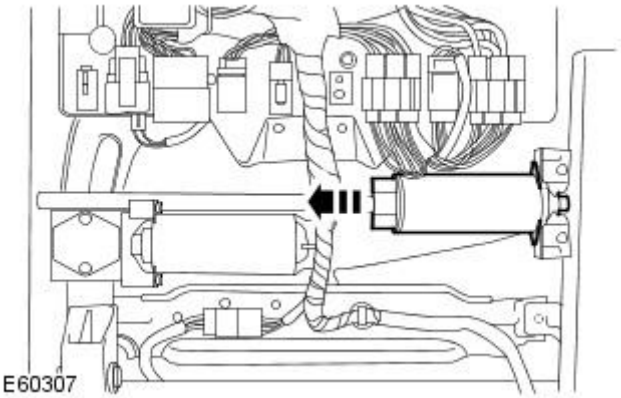


5. Remove the front seat track motor.
   1. Disconnect the electrical connector.
   2. Remove the front seat track motor.

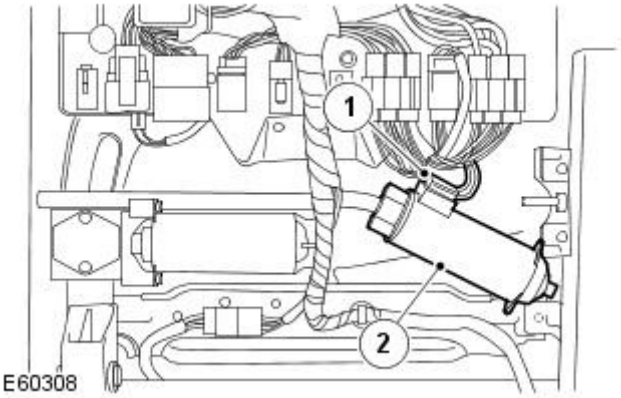


GETtheMANUALS.org

**6.** Remove the front seat track motor drive bar.

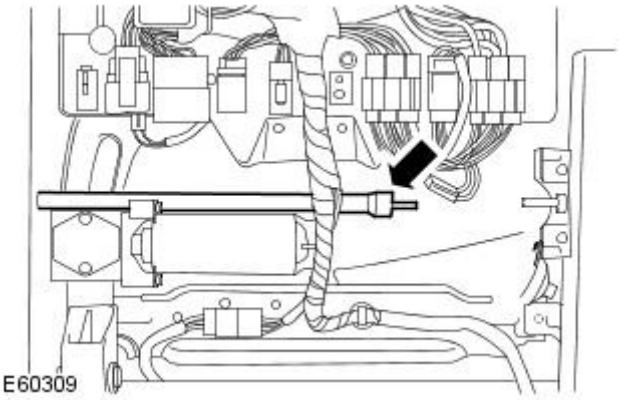


## Installation

**1.** Install the front seat track motor drive bar.

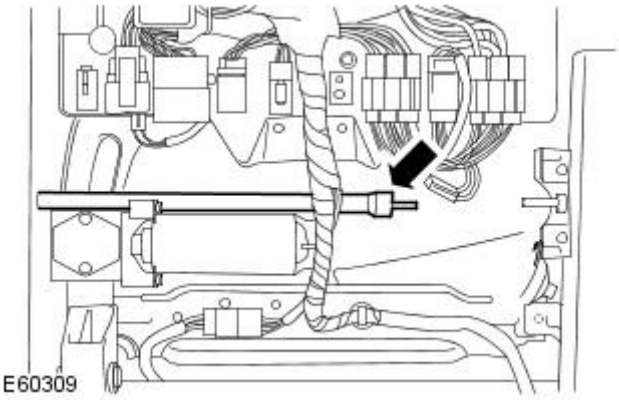


**2.** Connect the electrical connector.

1. Install the front seat track motor.
2. Connect the electrical connector.

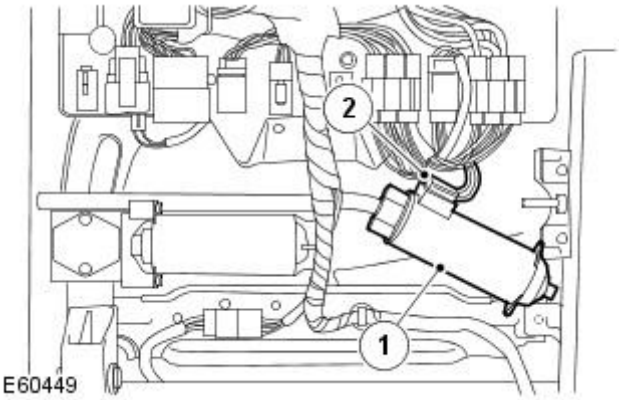


**3.** CAUTION: Make sure that the front seat track motor drive bar is correctly aligned.

Attach the front seat track motor.

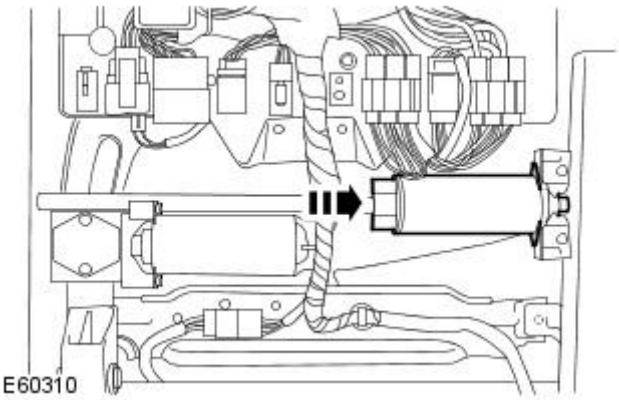


GETtheMANUALS.org

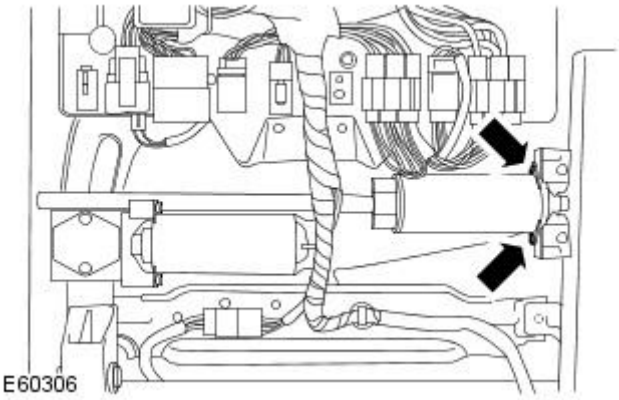


**4.** Install the retaining screws.

- Tighten to 5 Nm.

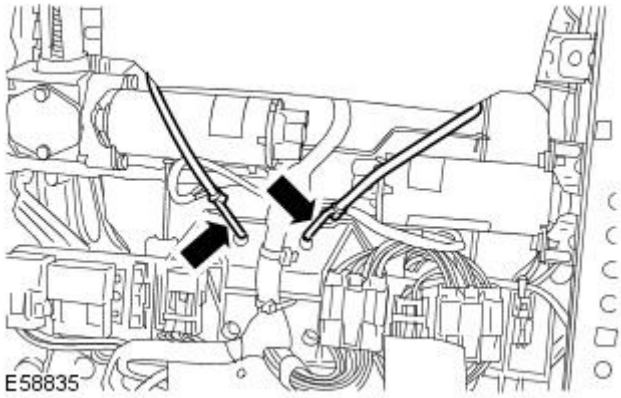


**5.** Attach the front seat cusion cover retaining hooks.

**6.** Install the front seat.
For additional information, refer to: Front Seat (501-10 Seating, Removal and Installation).

GETtheMANUALS.org

# Seating - Lumbar MotorVehicles Built From: 02/2004

Removal and Installation

## Removal

**1.** WARNINGS:

A restraints control module (RCM) only requires replacement if the system has incurred five separate deployments. At no time change the RCM for less than five separate deployments.

Always wear safety glasses when repairing an air bag supplemental restraint system (SRS) vehicle and when handling an air bag module. Failure to follow this instruction may result in personal injury.

Carry a live air bag module with the air bag and trim cover pointed away from your body. This will reduce the risk of injury in the event of an accidental deployment. Failure to follow this instruction may result in personal injury.

Do not set a live air bag module down with the trim cover face down. Failure to follow this instruction may result in personal injury.

After deployment, the air bag surface can contain deposits of sodium hydroxide, a product of the gas generant combustion that is irritating to the skin. Wash your hands with soap and water afterwards. Failure to follow this instruction may result in personal injury.

Never probe the connectors on the air bag module. Doing so may result in air bag deployment. Failure to follow this instruction may result in personal injury.

Vehicle sensor orientation is critical for correct system operation. If a vehicle equipped with an air bag SRS is involved in a collision, inspect the sensor mounting bracket and wiring pigtail for deformation. If damaged, replace the sensor whether or not the air bag is deployed.

To avoid accidental deployment and possible personal injury, the backup power supply must be depleted before repairing or replacing any air bag SRS components. To deplete the backup power supply energy, disconnect the battery ground cable and wait one minute. Failure to follow this instruction may result in personal injury.

• NOTE: Repair is made by replacement only. If a part is replaced and the new part does not correct the condition, install the original part and carry out the diagnostic procedure again.

• NOTE: When installing a new air bag module, a prepaid return postcard is provided with the replacement air bag module. The serial number for the new part and the vehicle identification number (VIN) must be recorded and sent to Jaguar Cars Ltd.

Remove the front seat.
For additional information, refer to: Front Seat (501-10 Seating, Removal and Installation).

**2.** Remove the front seat head restraint.

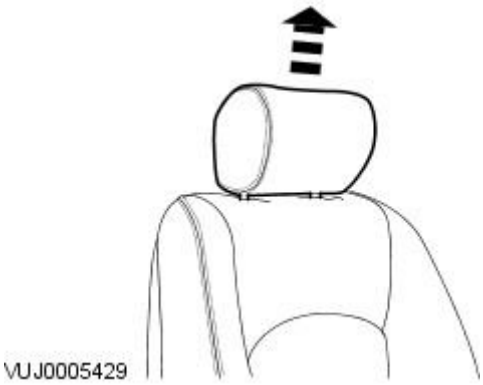


GETtheMANUALS.org

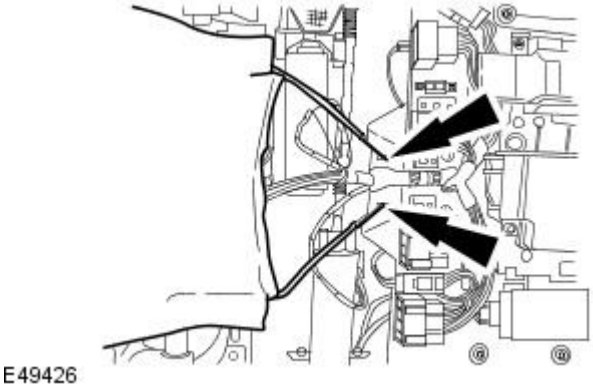


**3.** Detach the front seat backrest cover retaining strap.

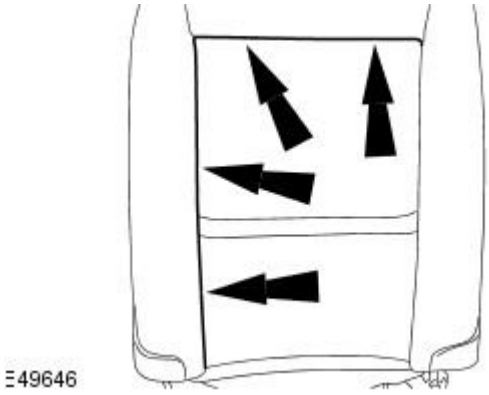


**4.** Detach the front seat backrest cover.

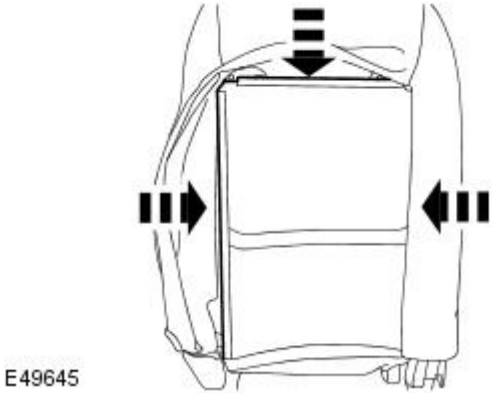


**5.** Detach the front seat backrest cover.

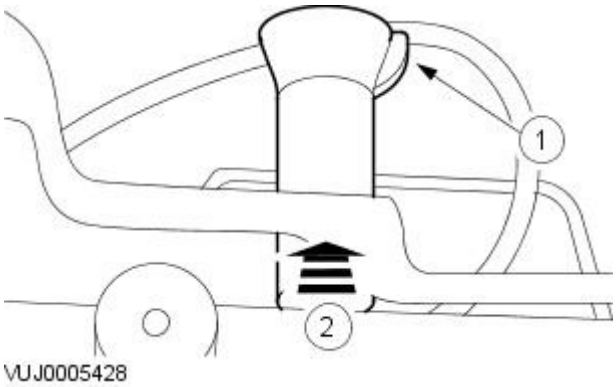


**6.** NOTE: left-hand shown, right-hand similar.

Remove the head restraint retaining post.

1. Release the retaining tang.
2. Remove the head restraint retaining post.

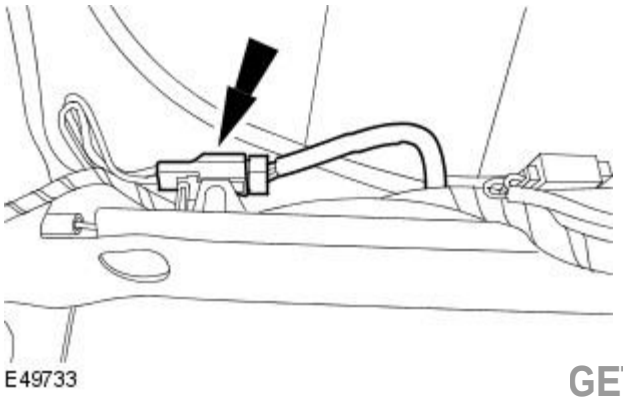


**7.** Disconnect the front seat backrest heater electrical connector (if equipped).

GETtheMANUALS.org

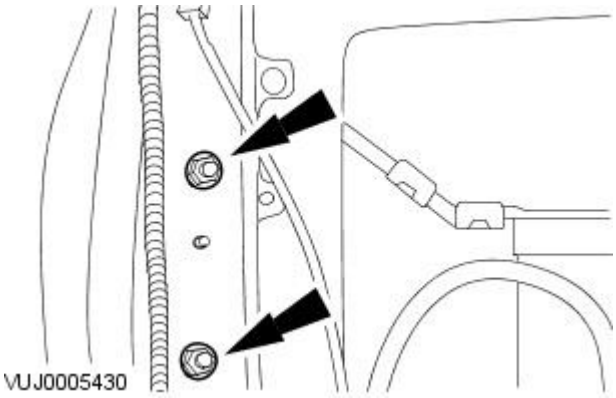


**8.** Remove the side air bag module retaining nuts.

**9.** Detach the seat backrest cover and cushion.

1. Reposition the seat backrest cover and cushion.
2. Detach the seat backrest cover and cushion.

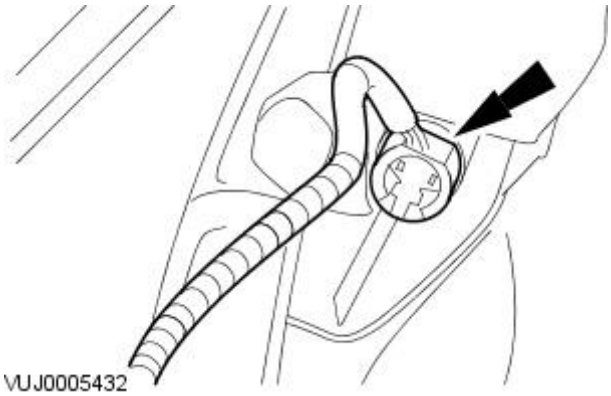


**10.** Disconnect the side air bag module electrical connector.

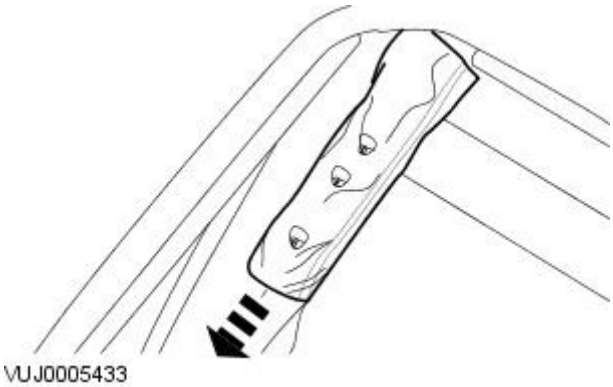


**11.** Remove the side air bag module.

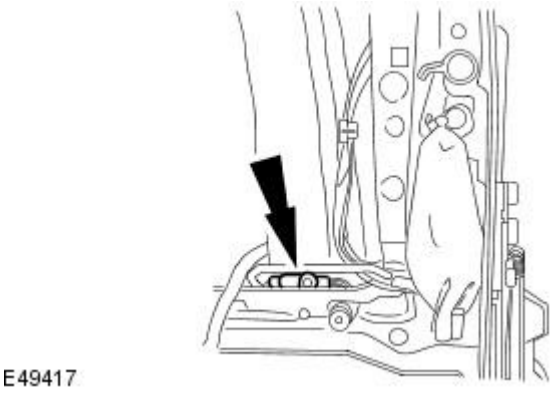


**12.** Disconnect the lumbar support electrical connector.

GETtheMANUALS.org

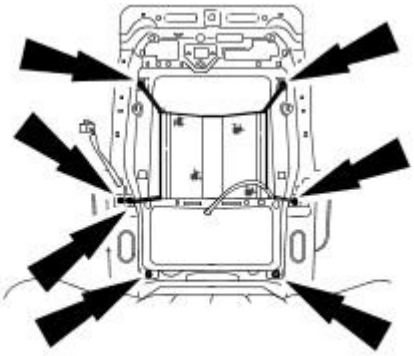

E49418

**13.** Remove the lumbar support assembly.

- Remove and discard the front seat lumbar motor retaining clips.

## Installation

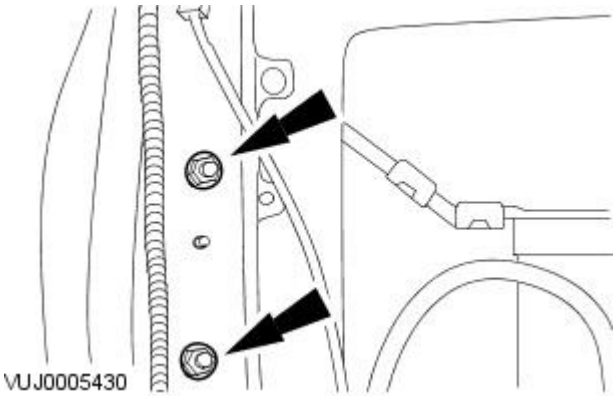

VUJ0005430

**1.** NOTE: Install new front seat backrest cover retaining clips.

To install, reverse the removal procedure.

1. Tighten to 7 Nm.

GETtheMANUALS.org

# Seating - Lumbar MotorVehicles Built Up To: 01/2004

Removal and Installation

All vehicles

**1.** WARNINGS:

A restraints control module (RCM) only requires replacement if the system has incurred five separate deployments. At no time change the RCM for less than five separate deployments.

Always wear safety glasses when repairing an air bag supplemental restraint system (SRS) vehicle and when handling an air bag module. Failure to follow this instruction may result in personal injury.

Carry a live air bag module with the air bag and trim cover pointed away from your body. This will reduce the risk of injury in the event of an accidental deployment. Failure to follow this instruction may result in personal injury.

Do not set a live air bag module down with the trim cover face down. Failure to follow this instruction may result in personal injury.

After deployment, the air bag surface can contain deposits of sodium hydroxide, a product of the gas generant combustion that is irritating to the skin. Wash your hands with soap and water afterwards. Failure to follow this instruction may result in personal injury.

Never probe the connectors on the air bag module. Doing so may result in air bag deployment. Failure to follow this instruction may result in personal injury.

Vehicle sensor orientation is critical for correct system operation. If a vehicle equipped with an air bag SRS is involved in a collision, inspect the sensor mounting bracket and wiring pigtail for deformation. If damaged, replace the sensor whether or not the air bag is deployed.

To avoid accidental deployment and possible personal injury, the backup power supply must be depleted before repairing or replacing any air bag SRS components. To deplete the backup power supply energy, disconnect the battery ground cable and wait one minute. Failure to follow this instruction may result in personal injury.

• NOTE: Repair is made by replacement only. If a part is replaced and the new part does not correct the condition, install the original part and carry out the diagnostic procedure again.

• NOTE: When installing a new air bag module , a prepaid return postcard is provided with the replacement air bag module. The serial number for the new part and the vehicle identification number (VIN) must be recorded and sent to Jaguar Cars Ltd.

Remove the front seat.
For additional information, refer to Section 501-10 Seating.

**2.** Remove the head restraint.

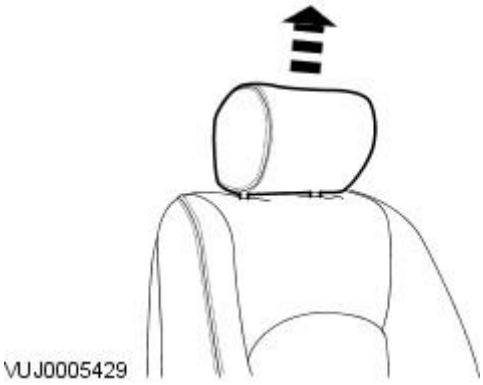


GETtheMANUALS.org

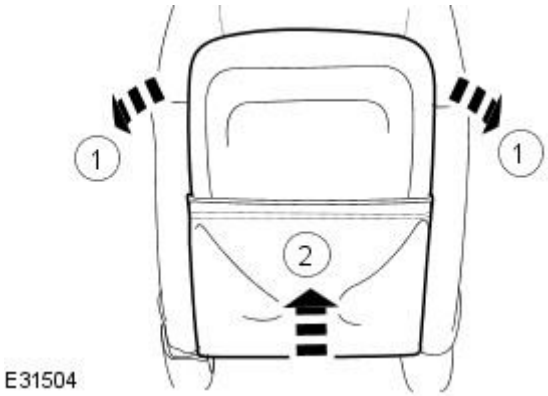


**3.** Detach the front seat backrest trim panel.

1. Detach the top edge of the front seat backrest trim panel.
2. Detach the front seat backrest trim panel.

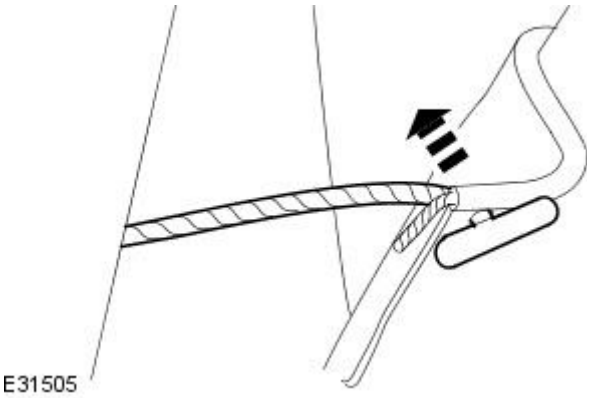


**4.** Detach the front seat backrest trim panel retaining strap.

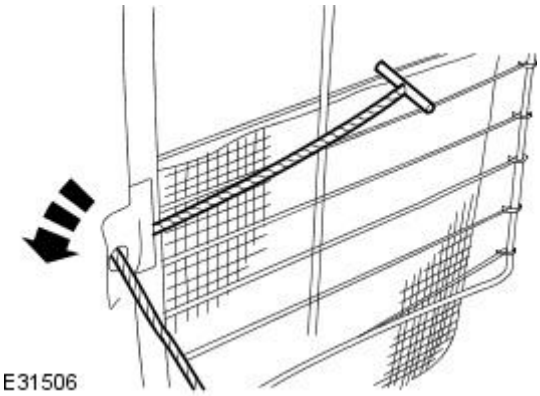


**5.** Remove the front seat backrest trim panel.

- Pass the front seat backrest trim panel retaining strap through the front seat backrest.

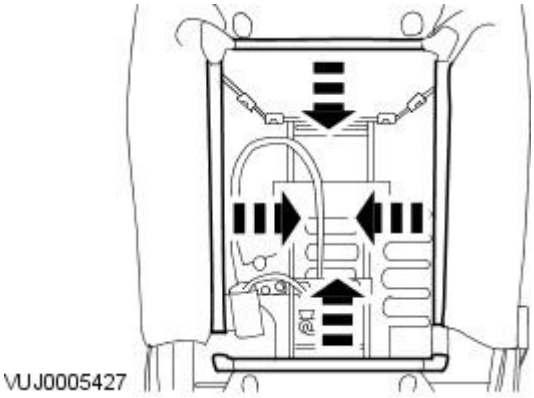


**6.** Detach the seat backrest cover.

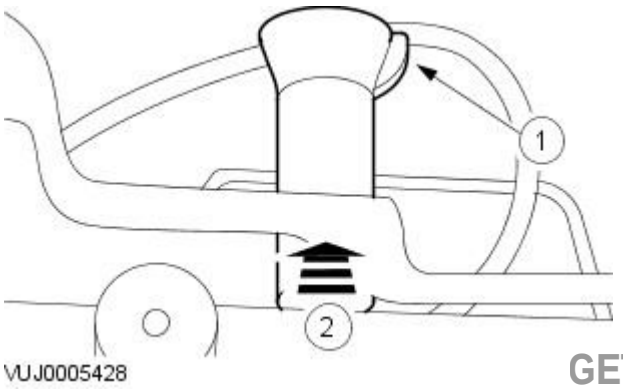


**7.** NOTE: left-hand shown, right-hand similar.

Remove the head restraint retaining post.

1. Release the retaining tang.
2. Remove the head restraint retaining post.

GETtheMANUALS.org

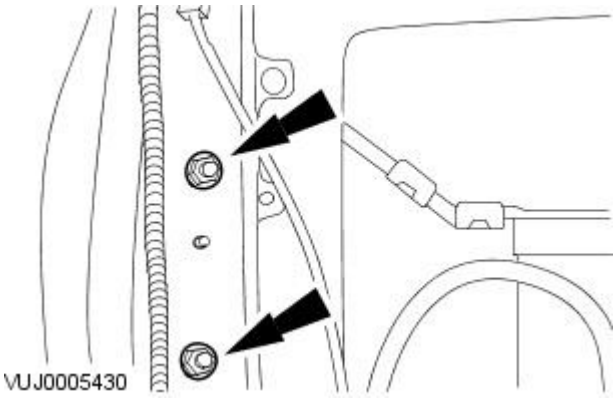


**8.** Remove the side air bag module retaining nuts.

**9.** Detach the seat backrest cover and cushion.

1. Reposition the seat backrest cover and cushion.
2. Detach the seat backrest cover and cushion.

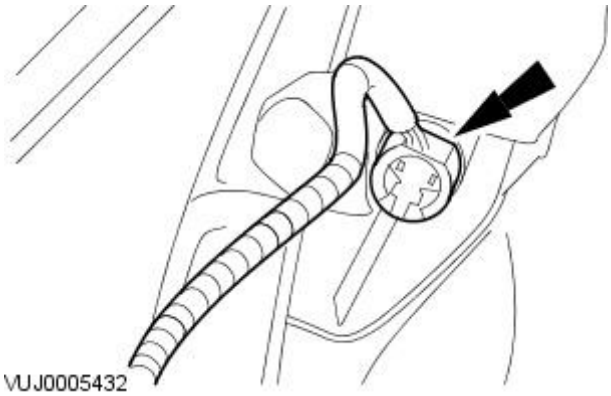


**10.** Disconnect the side air bag module electrical connector.

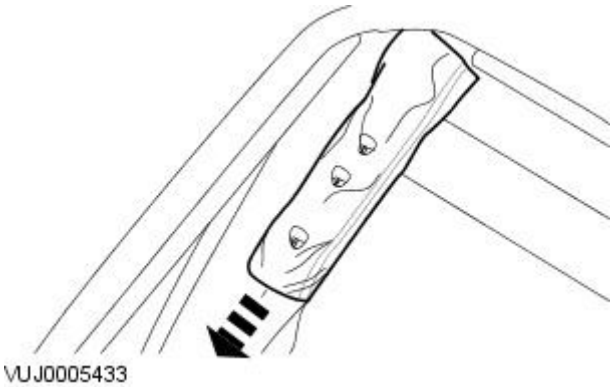


**11.** Remove the side air bag module.

Vehicles with heated seats

GETtheMANUALS.org

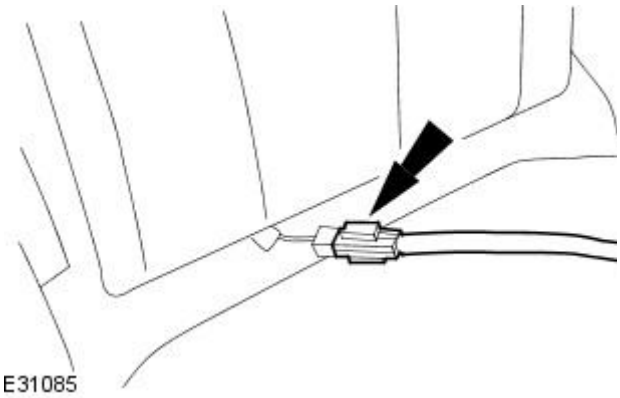


**12.** Remove the front seat backrest cover and cushion.

1. Disconnect the front seat cushion heater electrical connector.

All vehicles

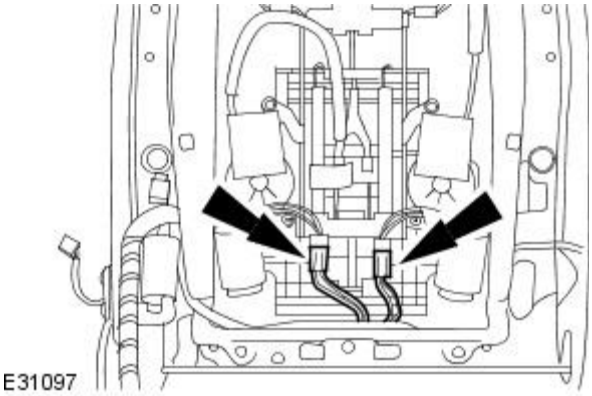


**13.** CAUTION: Make sure that all trim panels are protected when the seat is removed from the vehicle.

Disconnect the front seat lumbar motor electrical connectors.

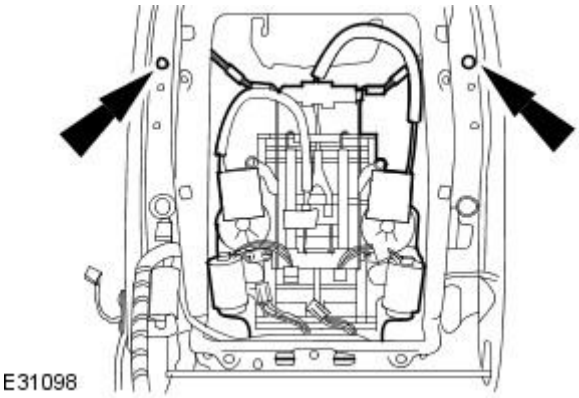


**14.** Remove the lumbar motor.

- Remove and discard the front seat lumbar motor retaining clips.

## Installation

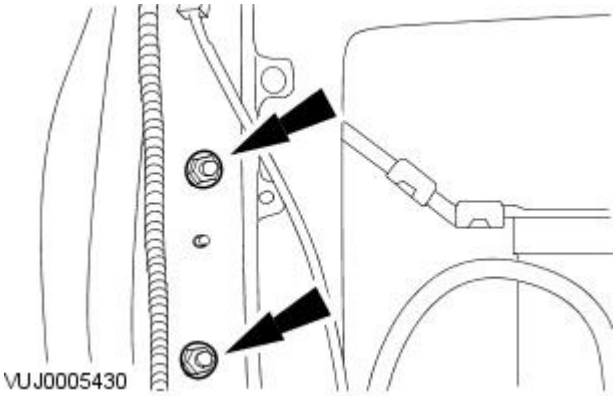


**1.** NOTE: Install new front seat backrest cover retaining clips.

To install, reverse the removal procedure.

1. Tighten to 7 Nm.

GETtheMANUALS.org

# Seating - Rear Seat Backrest Cover

Removal and Installation

## Removal

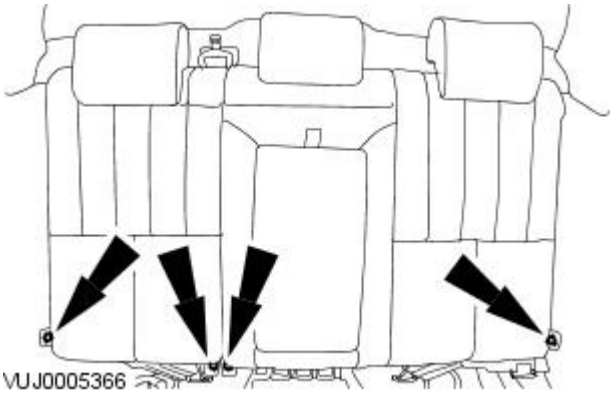


**1.** Remove both rear seat bolsters.
For additional information, refer to: Rear Seat Bolster (501-10 Seating, Removal and Installation).

**2.** Remove the rear seat backrest.

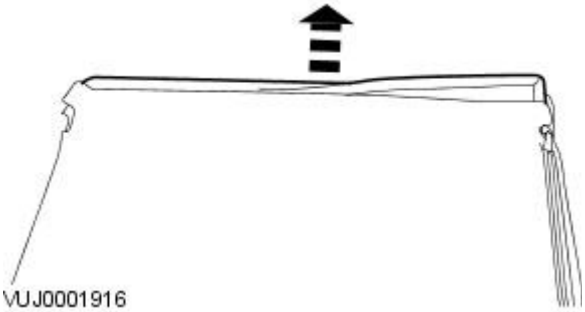


**3.** CAUTION: Make sure that all trim panels are protected when the seat backrest is removed from the vehicle.

Detach the rear seat backrest cover.

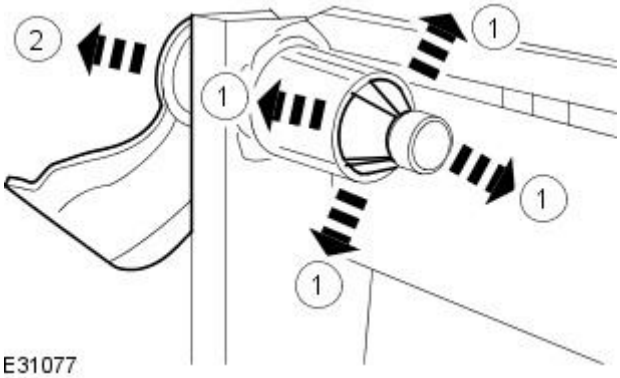


**4.** Remove the rear seat backrest hinge.

1. Detach the rear seat hinge retaining clip.
2. Remove the rear seat backrest hinge.

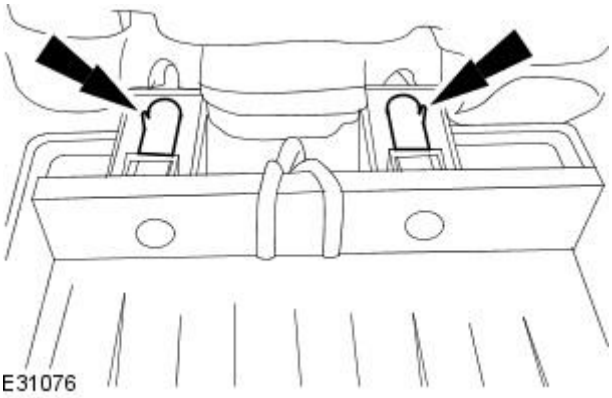


**5.** NOTE: Install new rear seat head restraint retaining posts if retaining tangs are damaged.

Remove the rear seat head restraint.

- Detach the rear seat head restraint retaining posts.

GETtheMANUALS.org

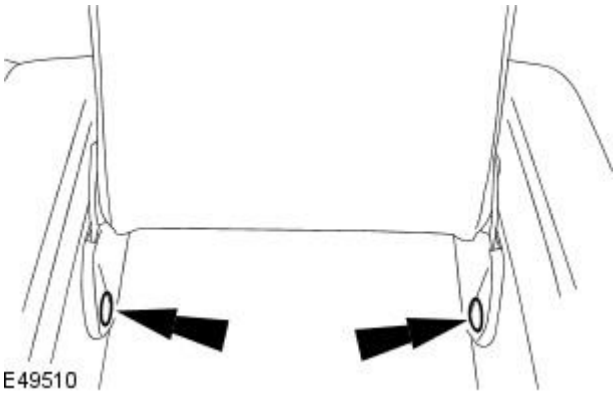


**6.** Remove the rear seat armrest retaining bolt covers.

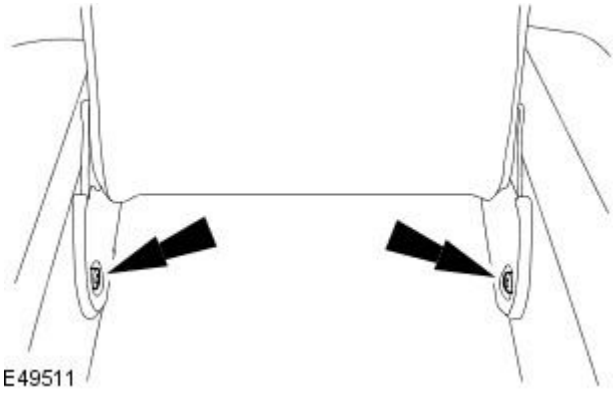


**7.** Remove the rear seat armrest retaining bolts.

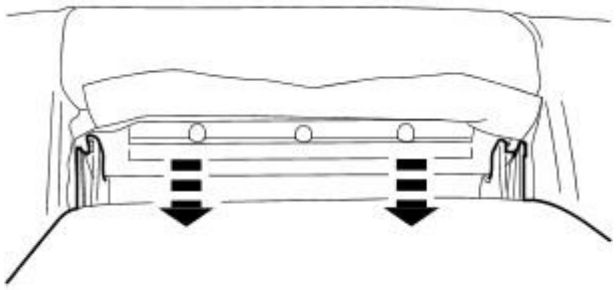


**8.** Remove the rear seat armrest.

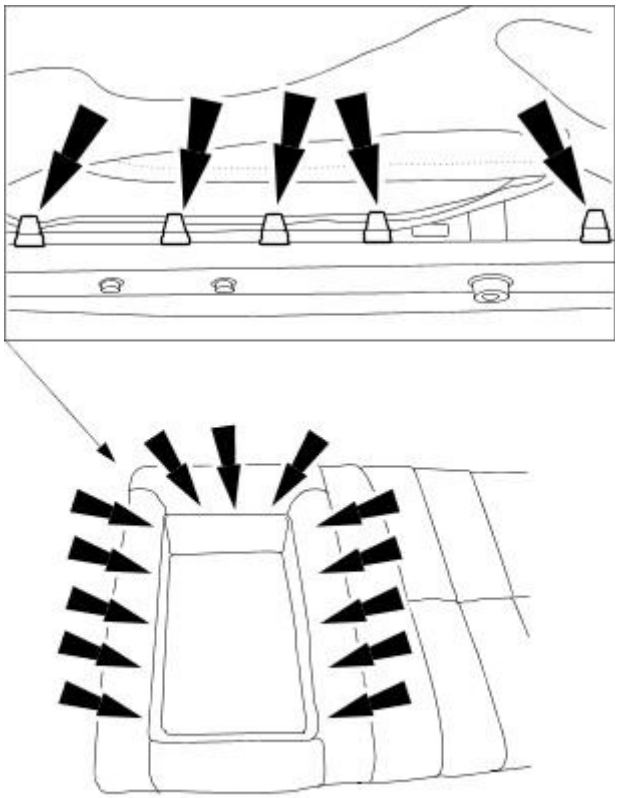


**9.** Remove the rear seat backrest cover.

GETtheMANUALS.org

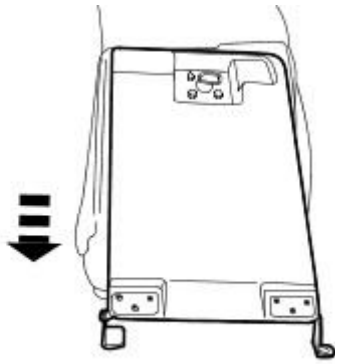

VUJ0001914

**10.** Remove the rear seat backrest.

E31078

**11.** Remove the rear seat backrest cover.

- Remove and discard the rear seat backrest cover retaining clips.

## Installation

**1.** NOTE: Install new rear seat backrest cover retaining clips.

To install, reverse the removal procedure.

GETtheMANUALS.org

# Seating - Rear Seat Bolster

Removal and Installation

## Removal

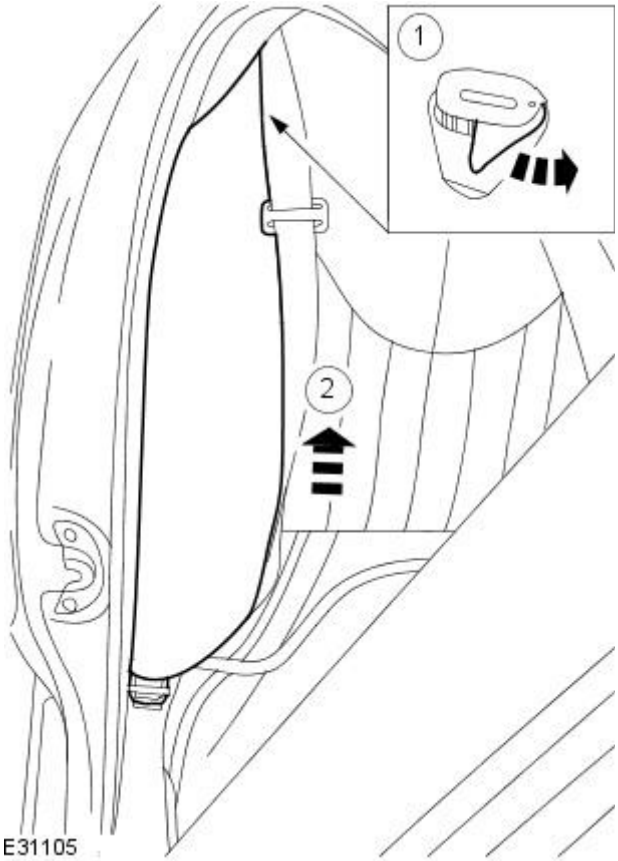


1. Remove the rear seat cushion.
   For additional information, refer to: Rear Seat Cushion (501-10 Seating, Removal and Installation).
2. Remove the rear seat bolster.
   1. Release the rear seat bolster retaining tang.
   2. Remove the rear seat bolster.
   - Detach the rear seat bolster from the retaining bracket.

## Installation

1. NOTE: Make sure the safety belt webbing and safety belt buckles are not twisted when installed.

   To install, reverse the removal procedure.

GETtheMANUALS.org

# Seating - Rear Seat Cushion

Removal and Installation

## Removal

**1.** Detach the center rear safety belt.

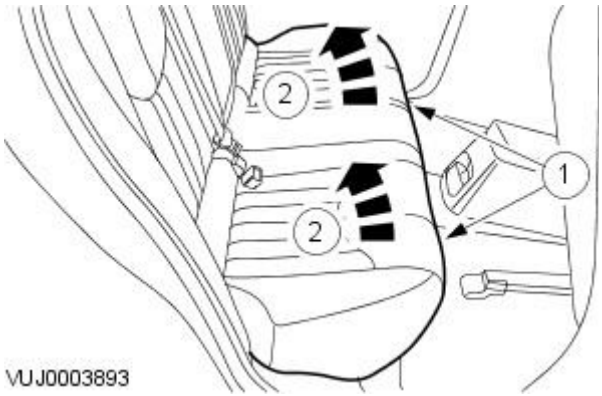


**2.** Detach the rear seat cushion.

1. Release the rear seat cushion retaining clips.
2. Detach the rear seat cushion.

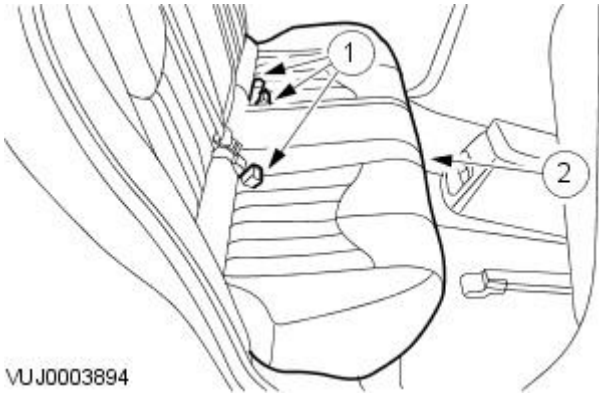


**3.** Remove the rear seat cushion.

1. Guide the safety belt buckles through the rear seat cushion aperture.
2. Remove the rear seat cushion.

## Installation

**1.** To install, reverse the removal procedure.

GETtheMANUALS.org

# Seating - Seat BaseVehicles Built From: 02/2004

Removal and Installation

## Removal

Driver and passenger seat

1. Remove the front seat backrest.
   For additional information, refer to: Front Seat Backrest - Vehicles Built From: 02/2004 (501-10 Seating, Removal and Installation).
2. Disconnect the safety belt buckle and pretensioner electrical connector.

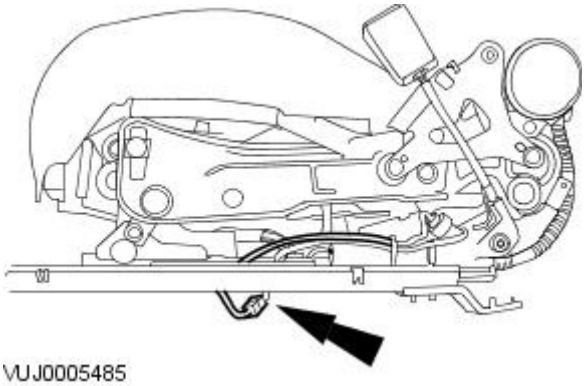

VUJ0005485

3. Remove the safety belt buckle and pretensioner.

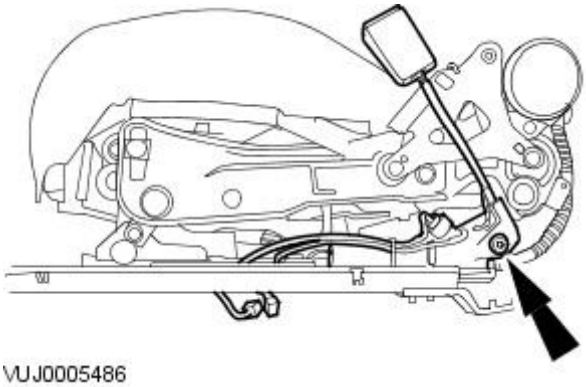

VUJ0005486

4. Disconnect the seat control switch electrical connectors.

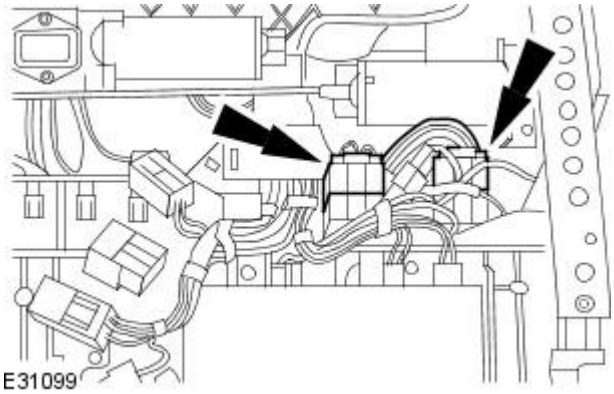

E31099

5. Remove the seat outer trim panel.

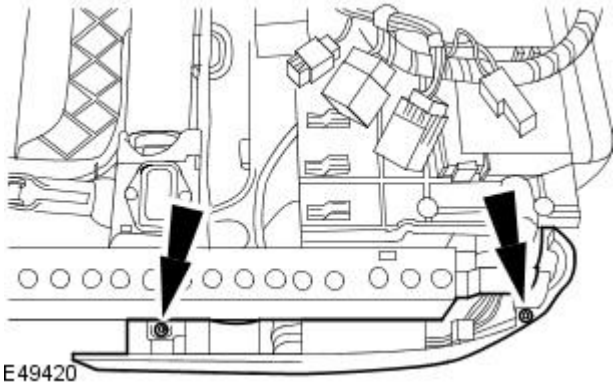

E49420

GETtheMANUALS.org

6. Disconnect the seat cushion heater electrical connector (if equipped).

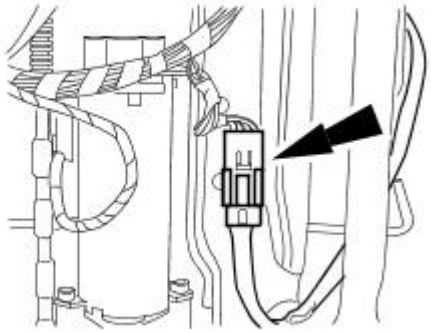

E49427

7. Remove the front seat cushion cover.

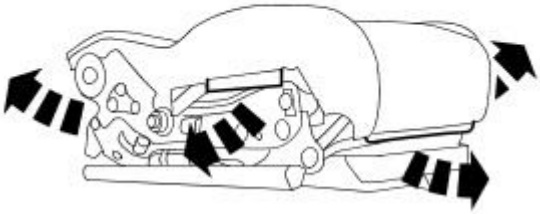

E49682

Passenger seat

8. Reposition the front passenger seat occupant classification sensor and detach the front passenger seat occupant classification sensor electrical connector from the seat base.

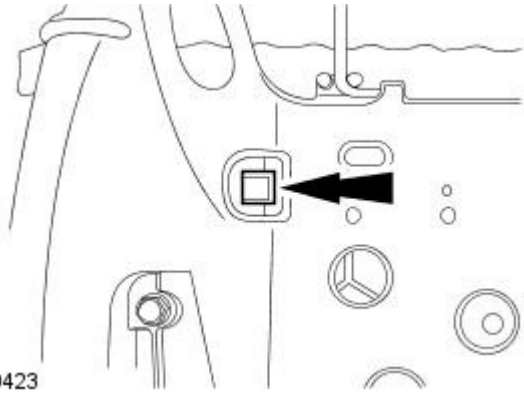

E49423

9. Disconnect the front passenger seat occupant classification sensor electrical connector.

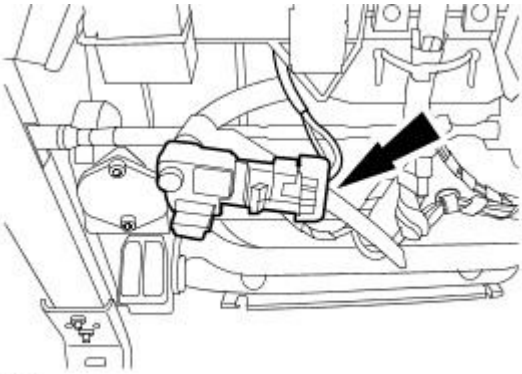

E49424

GETtheMANUALS.org

**10.** Remove the front passenger seat occupant classification sensor.

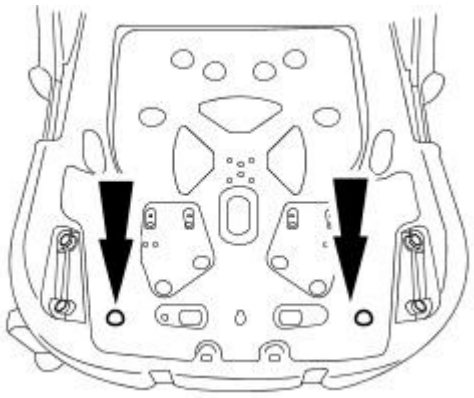

E49422

Driver and passenger seat

**11.** Remove the seat pan.

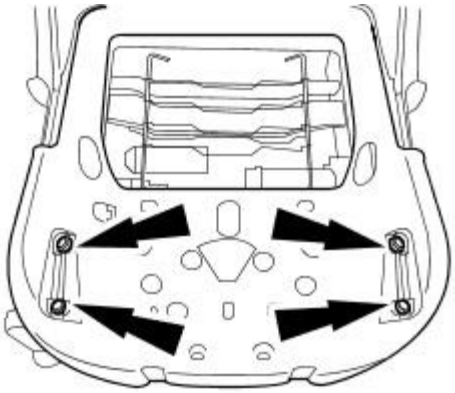

E49425

**12.** NOTE: Driver seat shown, passenger seat similar.

Detach the seat module retaining bracket and wiring harness.

1. Remove the seat module retaining bracket retaining screws.
2. Remove the seat module retaining bracket tie straps.
3. Detach the seat module retaining bracket and wiring harness.

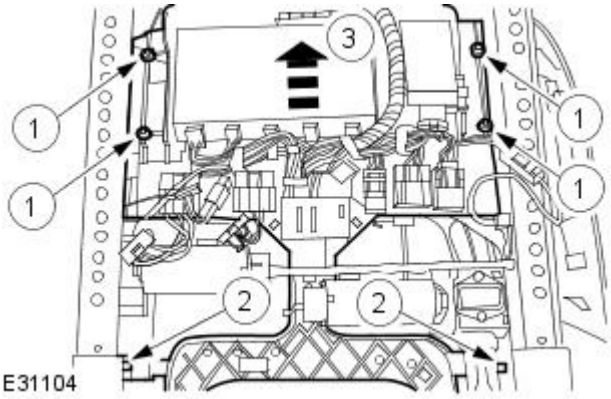


E31104

**13.** NOTE: Driver seat shown, passenger seat similar.

Disconnect the seat height adjustment motor and seat track motor electrical connectors.

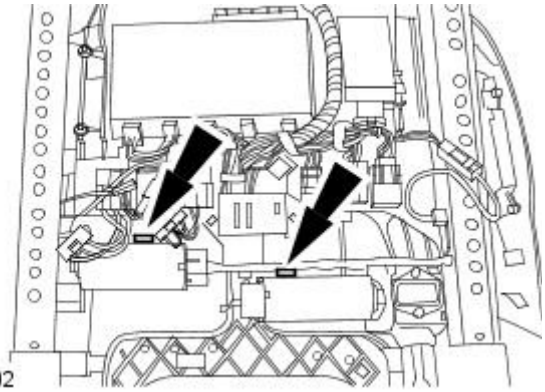

E31102

GETtheMANUALS.org

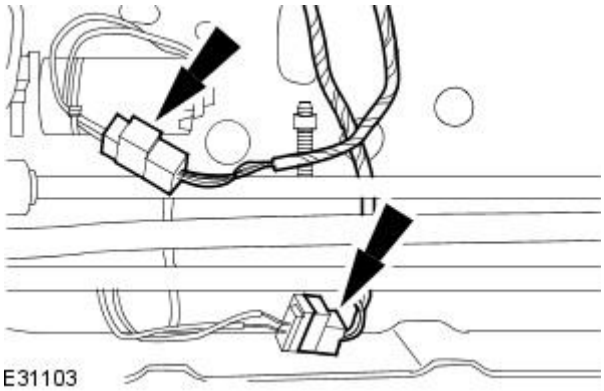


**14.** Remove the front seat base.

- Disconnect the front seat front height adjustment motor and front seat track motor electrical connectors.

## Installation

**1.** To install, reverse the removal procedure.

GETtheMANUALS.org

# Seating - Seat BaseVehicles Built Up To: 01/2004

Removal and Installation

## Removal

All Vehicles

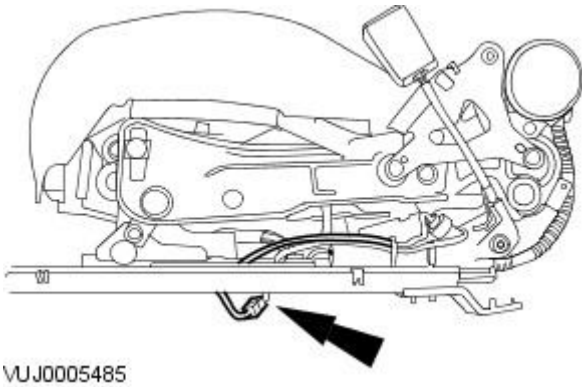

VUJ0005485

1. Remove the front seat backrest.
   For additional information, refer to Front Seat Backrest in this section.
2. Disconnect the front safety belt buckle electrical connector.

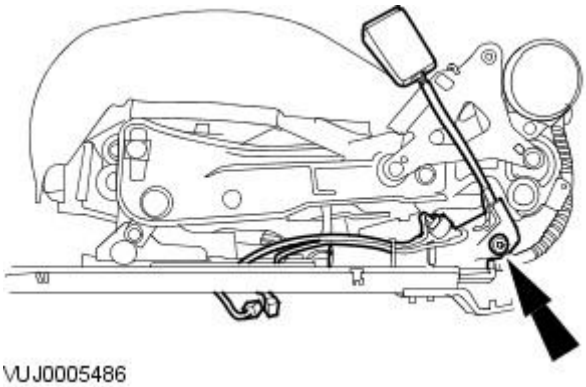

VUJ0005486

3. NOTE: The front safety belt buckle retaining bolt is part of the safety belt buckle and should not be separated.

   Remove the front safety belt buckle.

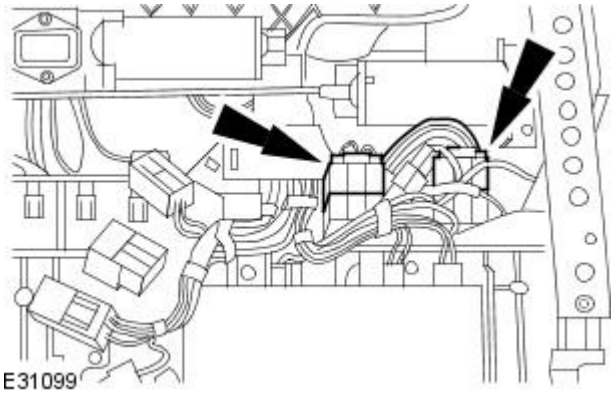

E31099

4. CAUTION: Make sure that all trim panels are protected when the seat is removed from the vehicle.

   Disconnect the seat control switch electrical connectors.

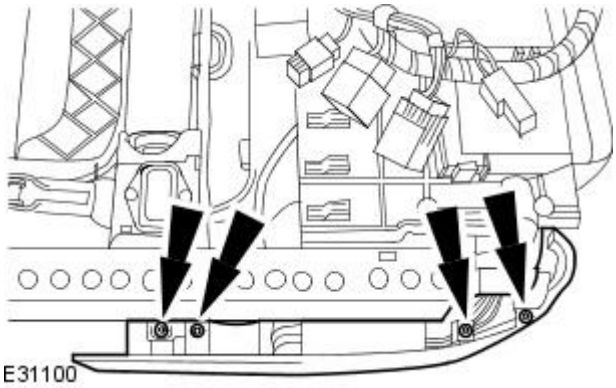

E31100

5. Remove the front seat outer trim panel.
   - Remove the front seat outer trim panel retaining screws.

Vehicles With Heated Seats

GETtheMANUALS.org

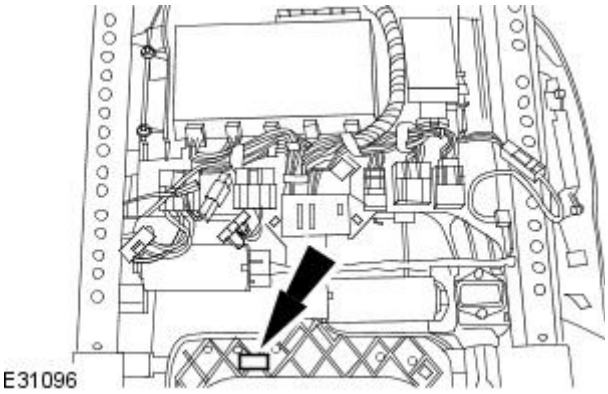


**6.** Disconnect the front seat cushion heater electrical connector.

**7.** Remove the front seat cushion cover.

All Vehicles

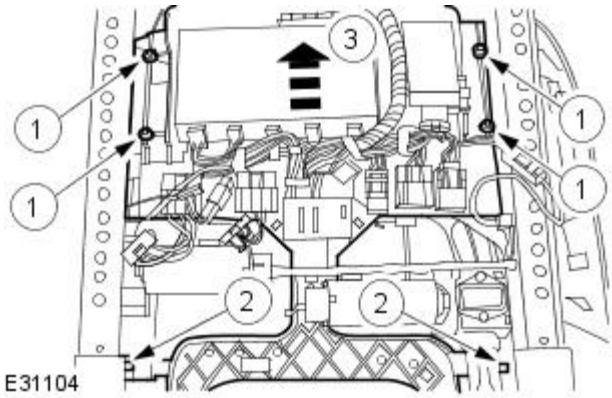


**8.** Detach the driver seat module (DSM) retaining bracket and wiring harness.

1. Remove the DSM bracket retaining screws.
2. Remove the DSM bracket tie straps.
3. Detach the driver seat module (DSM) retaining bracket and wiring harness.

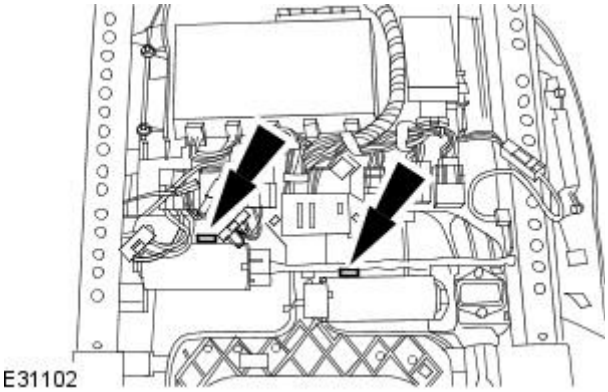


**9.** Disconnect the front seat rear height adjustment motor and front seat track motor electrical connectors.

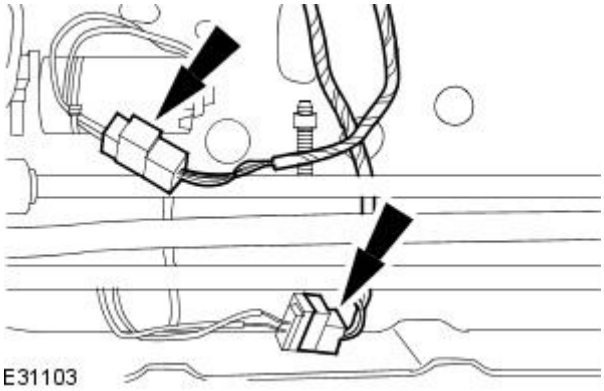


**10.** Remove the front seat base.

- Disconnect the front seat front height adjustment motor and front seat motor electrical connectors.

## Installation

**1.** To install, reverse the removal procedure.

GETtheMANUALS.org

# Seating - Seat Control Switch

Removal and Installation

## Removal

All vehicles

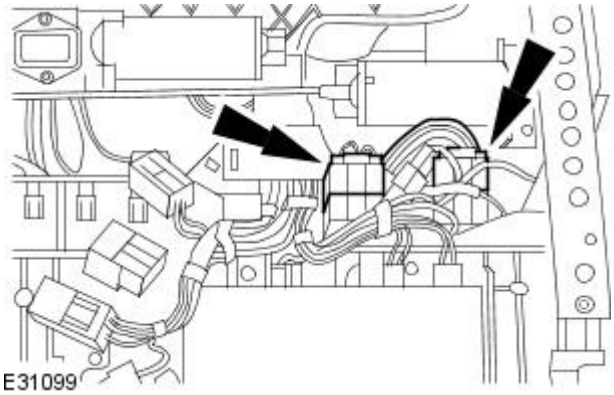


**1.** Remove the front seat.
For additional information, refer to: Front Seat (501-10 Seating, Removal and Installation).

**2.** CAUTION: Make sure that all trim panels are protected when the seat is removed from the vehicle.

Disconnect the seat control switch electrical connectors.

Vehicles built up to 01/2004

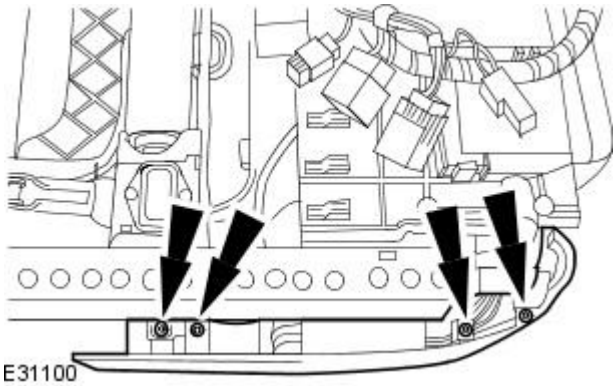


**3.** Detach the front seat outer trim panel.

- Remove the front seat outer trim panel retaining screws.

Vehicles built 02/2004 onwards

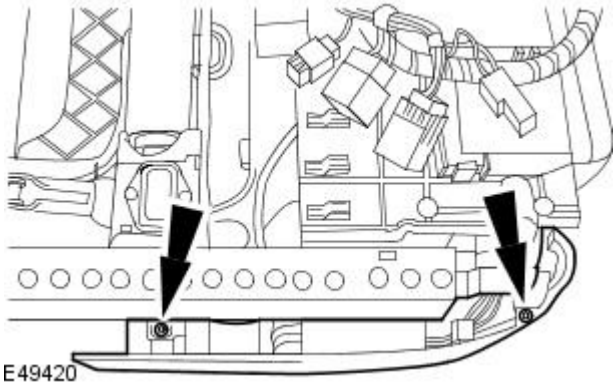


**4.** Detach the front seat outer trim panel.

- Remove the front seat outer trim panel retaining screws.

All vehicles

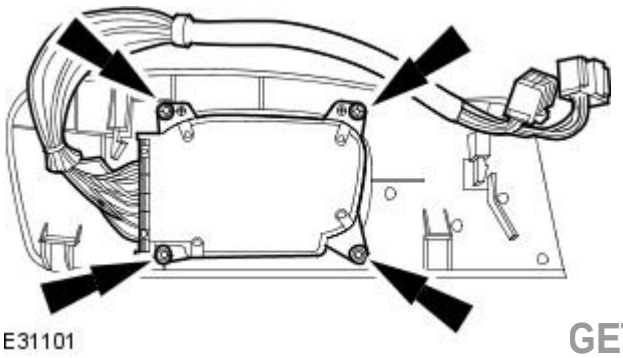


**5.** Remove the seat control switch.

## Installation

**1.** To install, reverse the removal procedure.

GETtheMANUALS.org

# Glass, Frames and Mechanisms -

**Torque Specifications**

| Description | Nm | lb-ft | lb-in |
|---|---|---|---|
| Front door window glass regulator and motor retaining bolts | 6 Nm | - | 53 |
| Rear door window glass regulator and motor retaining bolts | 6 Nm | - | 53 |
| Rear door glass run retaining nuts | 4 Nm | - | 35 |

GETtheMANUALS.org

# Glass, Frames and Mechanisms - Glass, Frames and Mechanisms

Description and Operation

The vehicle has a fully bonded, laminated windshield glass glazed directly to the body. The windshield glass is available in four versions:

- Non heated with electrochromic mirror.
- Heated with electrochromic mirror.
- Non heated with prismatic mirror.
- Heated with prismatic mirror.

The heated windshield glass is controlled by the dual automatic temperature control module when the ignition is in the RUN position and the heated windshield glass switch has been activated. Four minutes after activation, the heated windshield glass will automatically switch off. The function is also switched off if the switch is operated before the four minute time has elapsed.

The rear windshield is available in four versions.

- AM/FM
- AM/FM Diversity
- AM/FM and TV
- AM/FM Diversity and TV

The rear window is a fully bonded toughened glass that combines the rear defrost grid, antenna for the audio unit, TV and VICS. The heated rear window is controlled by the dual automatic temperature control when the rear window defrost button is depressed. When the switch is depressed an indicator in the switch will illuminate indicating that the system is operative. Ten minutes after activation, the heated rear window will automatically turn off. The function is also turned off if the customer deselects before the ten minute time has elapsed.

The front and rear door glass windows are electrically operated. All windows can be operated individually, or by the driver window control switch. The operation of the windows is proportional to the switch activation. The driver window can be controlled by "one touch" in the upwards or downwards direction. When the "one touch" operation is activated in the upwards direction an anti-pinch sensor is automatically checked prior to the window closing. If the anti-pinch sensor is inoperative the window will not close. When the anti-pinch sensor detects an obstacle in the windows path the upward travel of the window will automatically cease. Downward travel of the window will begin until a total of seven seconds has elapsed.

GETtheMANUALS.org

# Glass, Frames and Mechanisms - Glass, Frames and Mechanisms

Diagnosis and Testing

## Inspection and Verification

1. **1.** Verify the customer concern by operating the system.
2. **2.** Visually inspect for obvious signs of mechanical and electrical damage.

**Visual Inspection Chart**

| Mechanical | Electrical |
|---|---|
| • Window glass.<br>• Window regulator. | • Fuse(s).<br>• Window motor.<br>• Loose or corroded electrical connector(s).<br>• Switch.<br>• Circuit(s). |

3. **3.** If an obvious cause for an observed or reported concern is found, correct the cause (if possible) before proceeding to the next step.
4. **4.** If the concern is not visually evident, verify the symptom and refer to the Jaguar Approved Diagnostic System.

GETtheMANUALS.org

# Glass, Frames and Mechanisms - Door Window Motor Initialization

General Procedures

**1.** NOTE: After the battery has been disconnected it is necessary to initialize each door window motor separately to operate the "one-touch" up function.

Operate the window control switch until the door window glass is in the fully closed position, continue to operate the window control switch for a further two seconds.

**2.** Release the window control switch.

**3.** Operate the window control switch in the closed position and continue to operate the window control switch for a further two seconds.

**4.** Operate the window control switch until the door window glass is in the fully open position ("one-touch" down).

**5.** NOTE: If the door window motor initialization has been completed correctly, when the window control switch is operated, the door window glass should move to the fully closed position ("one-touch" up) automatically.

• NOTE: If the door window glass does not fully close automatically ("one-touch" up), repeat the complete procedure.

Operate the window control switch once to the close position.

**6.** Repeat the door window motor initialization for each door window motor.

GETtheMANUALS.org

# Glass, Frames and Mechanisms - Front Door Window Glass

Removal and Installation

## Removal

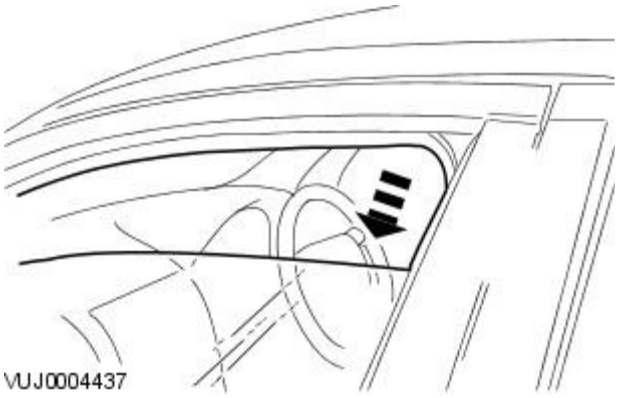


**1.** Lower the front door window glass approximately 290 mm (11.6 in).

**2.** Remove the front door trim panel.
For additional information, refer to Section 501-05 Interior Trim and Ornamentation.

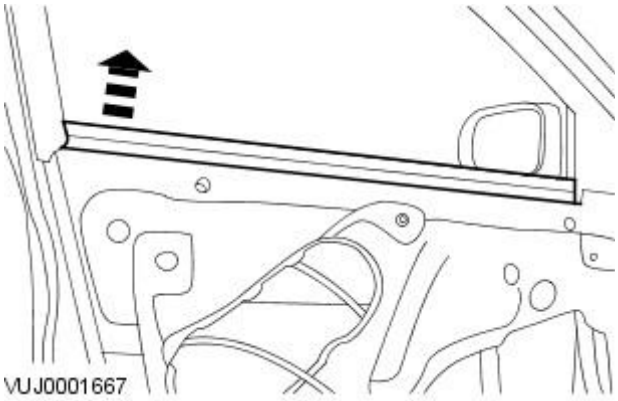


**3.** CAUTION: Do not bend or deform the weatherstrip.

Remove the front door interior weatherstrip.

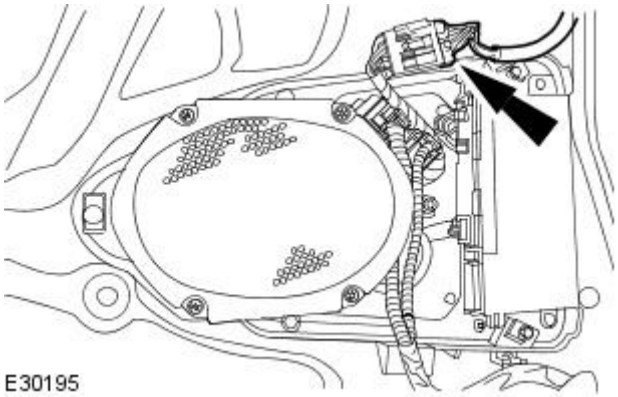


**4.** Disconnect the front door exterior mirror electrical connector.

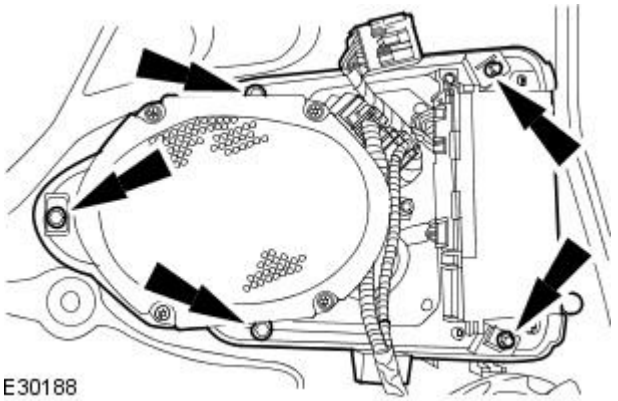


**5.** Detach the front door speaker module.

GETtheMANUALS.org

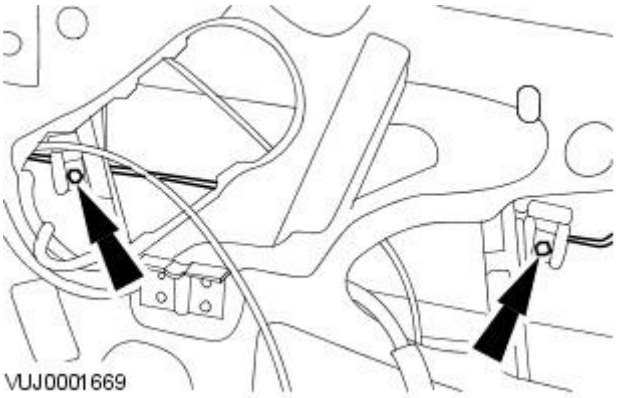


**6.** Remove the front door window glass.

## Installation

**1.** NOTE: The window glass should be placed in the clamps then inserted into the B post seal. The window glass should then be moved forwards 2mm to obtain correct alignment.

To install, reverse the removal procedure.

GETtheMANUALS.org

# Glass, Frames and Mechanisms - Front Door Window Regulator and Motor

Removal and Installation

## Removal

1. Remove the front door window glass.
   For additional information, refer to Front Door Window Glass in this section.
2. Detach the front door window regulator and motor.

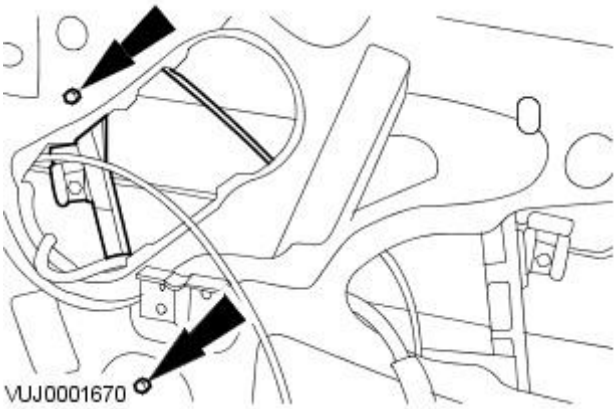


3. Detach the front door window regulator and motor.

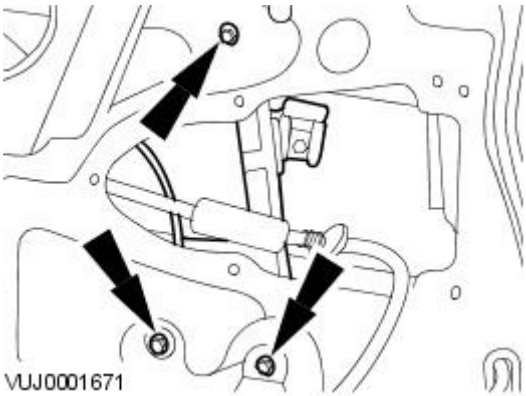


4. Remove the front door window regulator and motor.
   - Disconnect the front door window regulator and motor electrical connector.

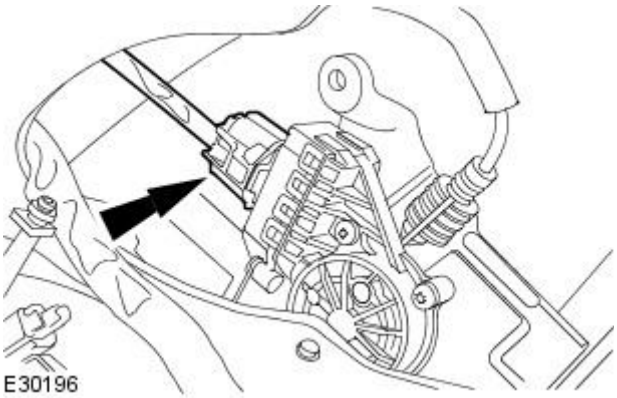


## Installation

1. NOTE: Make sure the cable from the motor is the outermost cable.

   To install, reverse the removal procedure.
2. Tighten to 6 Nm.

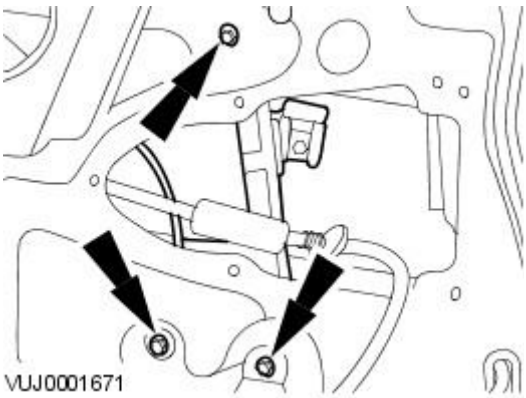


GETtheMANUALS.org

# Glass, Frames and Mechanisms - Rear Door Fixed Window Glass

Removal and Installation

## Removal

1. Remove the rear door trim panel.
   For additional information, refer to Section 501-05 Interior Trim and Ornamentation.
2. Remove the rear door aperture cover.

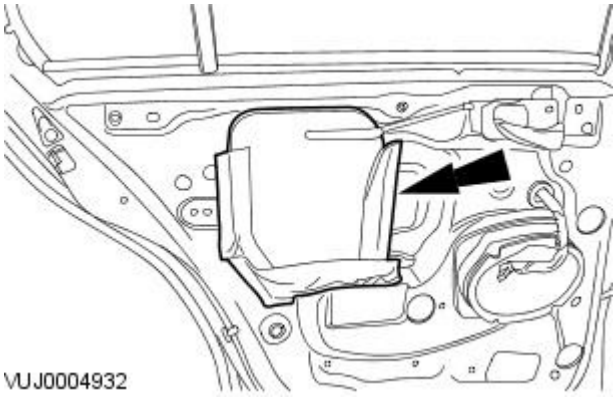


3. Remove the rear door window glass run retaining bracket.

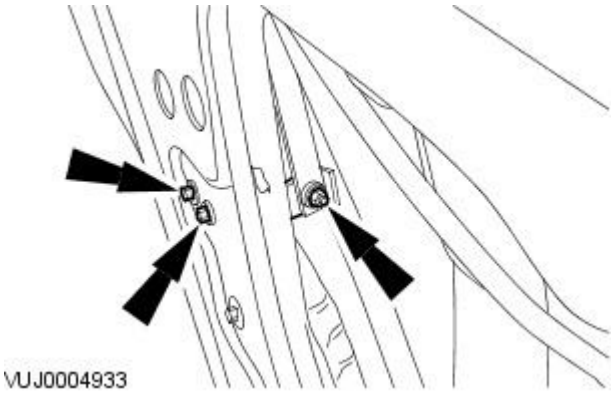


4. Remove the rear door window glass interior trim panel.

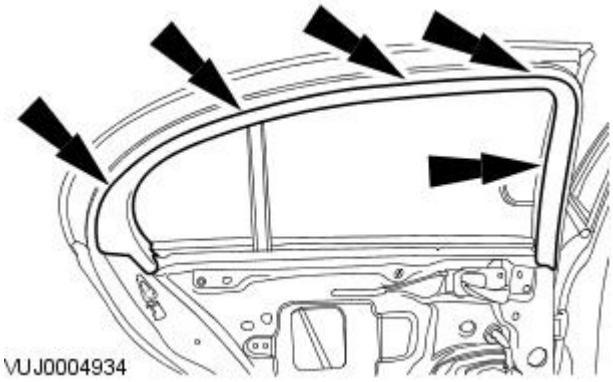


5. CAUTION: Do not damage the rear door window glass interior weatherstrip.

   Remove the rear door window glass interior weatherstrip.

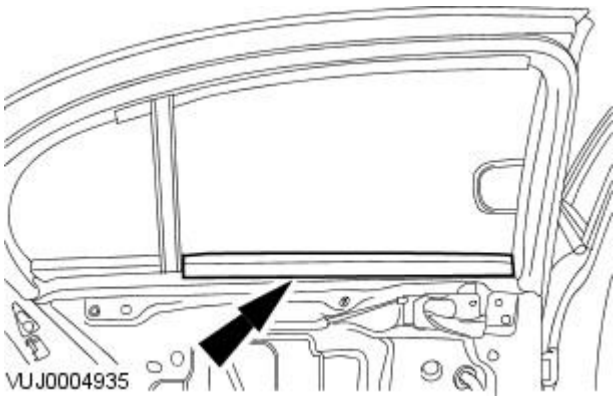


6. Lower the rear door window glass.

GETtheMANUALS.org

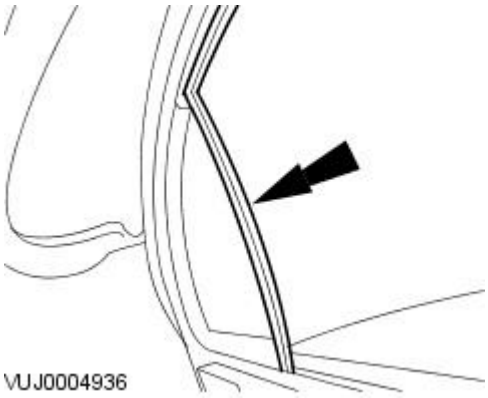


**7.** Detach the rear door window glass run weatherstrip.

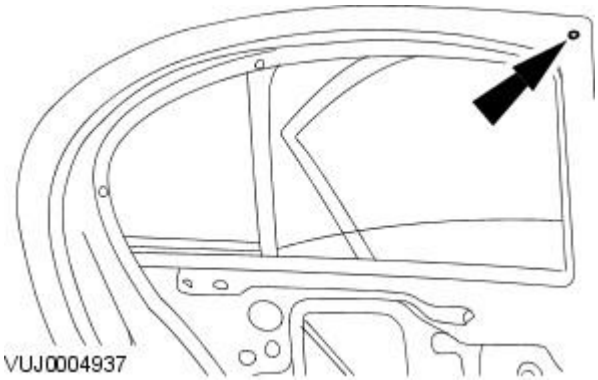


**8.** Remove the rear door window glass exterior moulding retaining nut.

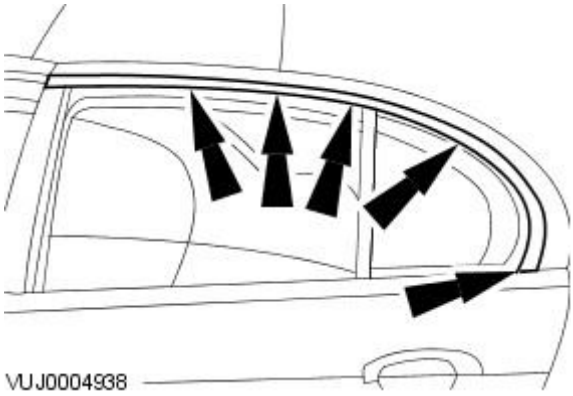


**9.** Remove the rear door window glass exterior moulding.

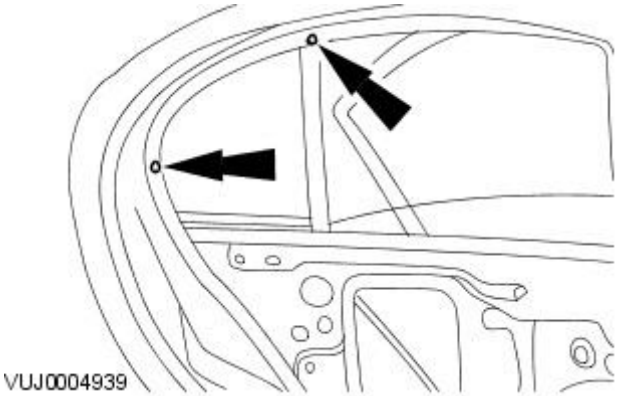


**10.** Remove the rear door window glass run retaining nut and the rear quarter window glass retaining nut.

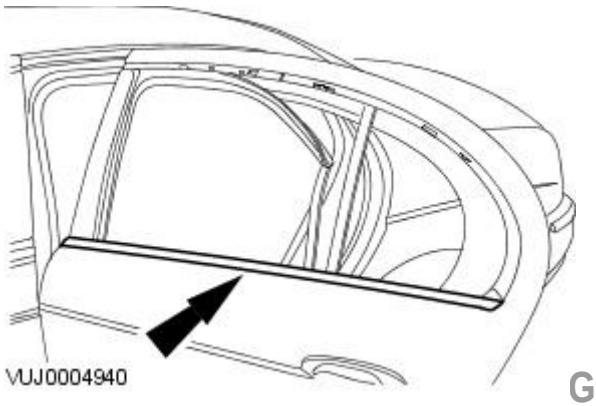


**11.** Remove the rear door window glass exterior weatherstrip.

GETtheMANUALS.org

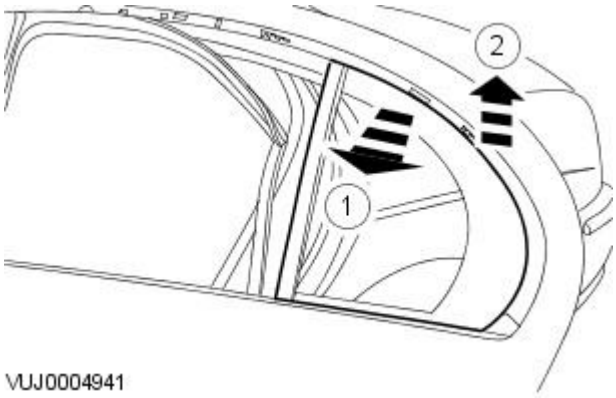


**12.** Remove the rear quarter window glass.

1. Detach the rear quarter window glass.
2. Remove the rear quarter window glass.

## Installation

**1.** NOTE: Apply a new bead of butyl adhesive to the rear quarter window glass.

To install, reverse the removal procedure.

**2.** Tighten to 4 Nm.

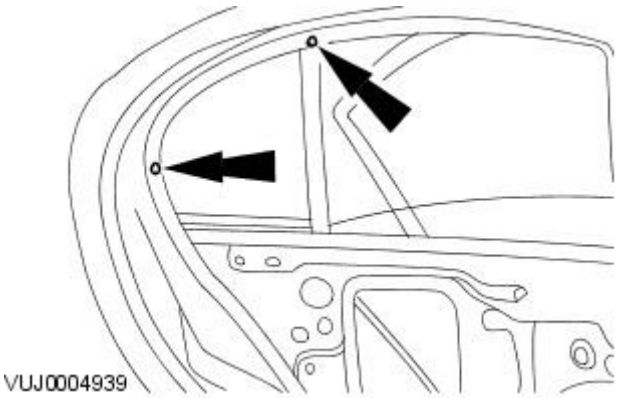


**3.** Tighten to 4 Nm.

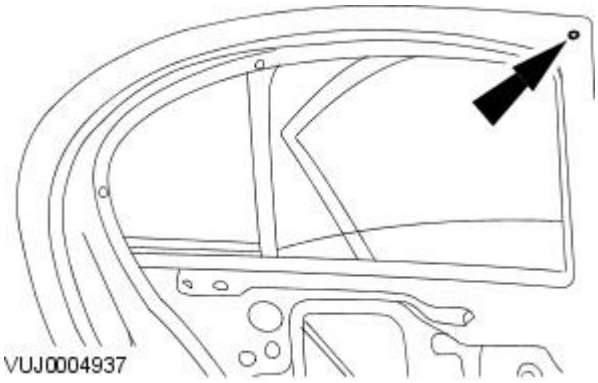


**4.** Tighten to 4 Nm.

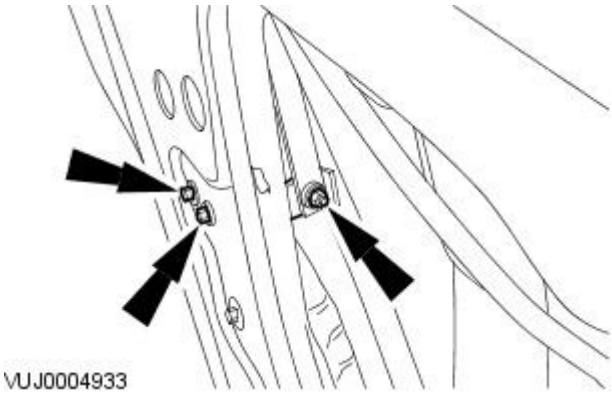


GETtheMANUALS.org

# Glass, Frames and Mechanisms - Rear Door Window Glass

Removal and Installation

## Removal

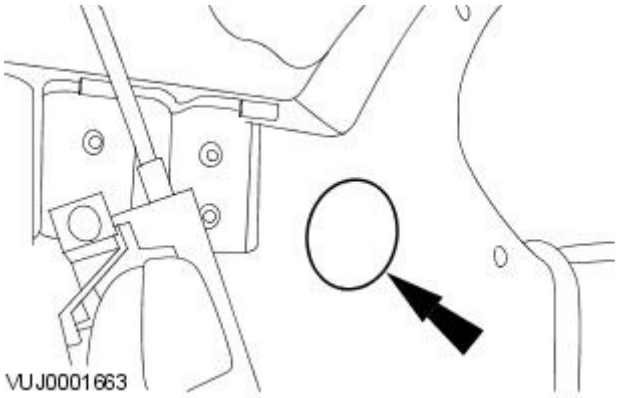


1. Remove the rear quarter window glass.
   For additional information, refer to Rear Quarter Window Glass in this section.
2. Remove the rear door window glass access hole cover.

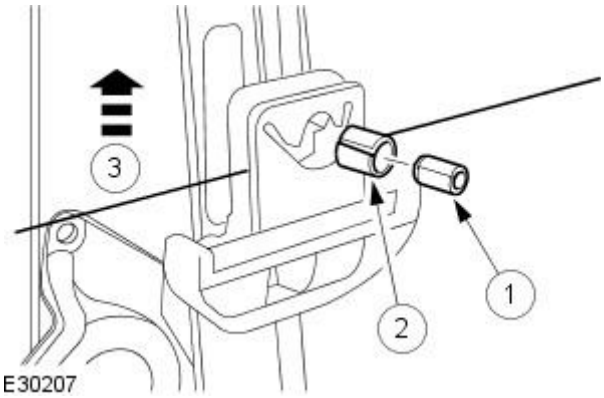


3. Lower the rear door window glass until the pin is visible through the access hole.
4. Detach the rear door window glass from the regulator.
   1. Remove the pin.
   2. Remove the sleeve.
   3. Detach the window glass from the regulator.

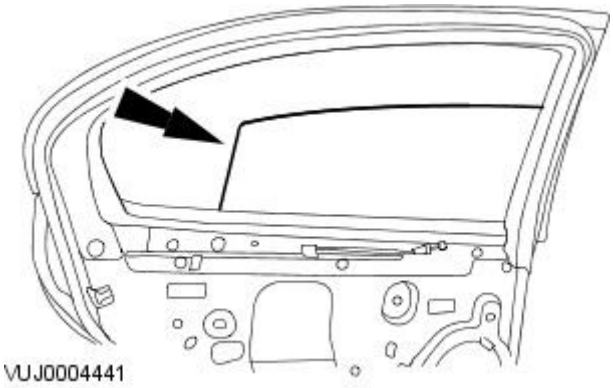


5. Remove the rear door window glass.

## Installation

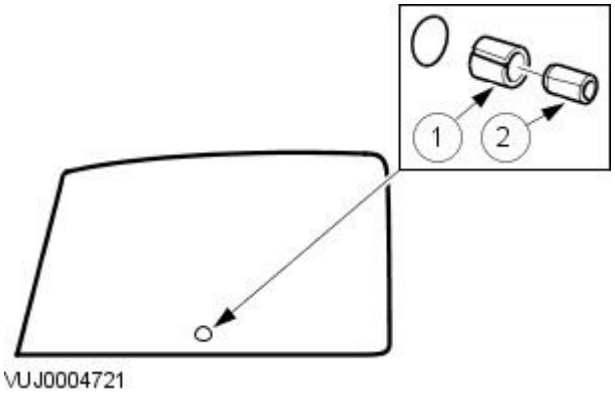


1. CAUTION: Take care when installing the sleeve and pin into the window glass. Failure to follow these instructions may result in damage to the window glass.
   1. CAUTION: Make sure the sleeve is fitted central in the window glass.
      1. Install the sleeve.
   1. CAUTION: Make sure the sleeve stays central in the window glass.
      2. Install the pin.

GETtheMANUALS.org

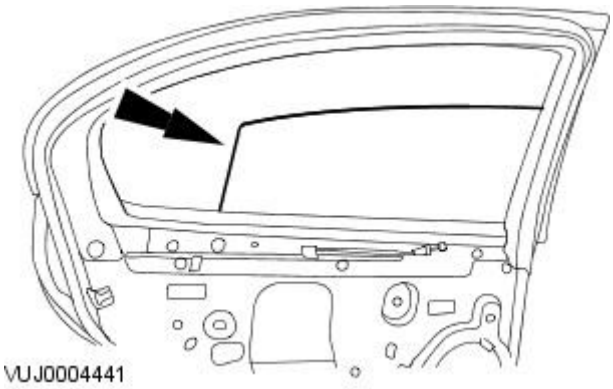


**2.** Install the rear door window glass.

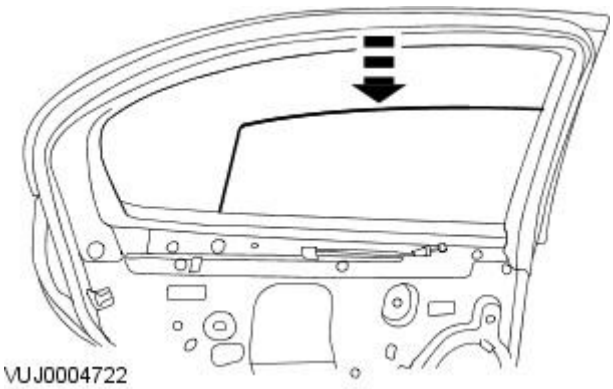


**3.** NOTE: When the window glass is to be installed, the spacer bracket pin should be repositioned in the spacer bracket and tapped into place with a soft mallet. Insert the glass into the regulator glass clamp and firmly push down. Check both sides have snapped over the spacer bracket pin.

Attach the rear door window glass into the regulator clamp.

**4.** Install the rear quarter window glass.
For additional information, refer to Rear Quarter Window Glass in this section.

GETtheMANUALS.org

# Glass, Frames and Mechanisms - Rear Door Window Regulator and Motor

Removal and Installation

## Removal

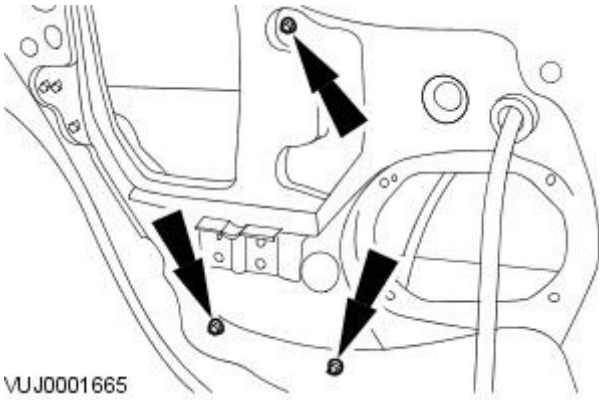


1. Remove the rear door window glass.
   For additional information, refer to Rear Door Window Glass in this section.
2. Detach the rear door window regulator and motor.

3. Remove the rear door window regulator and motor.
   - Disconnect the rear door window regulator and motor electrical connector.

## Installation

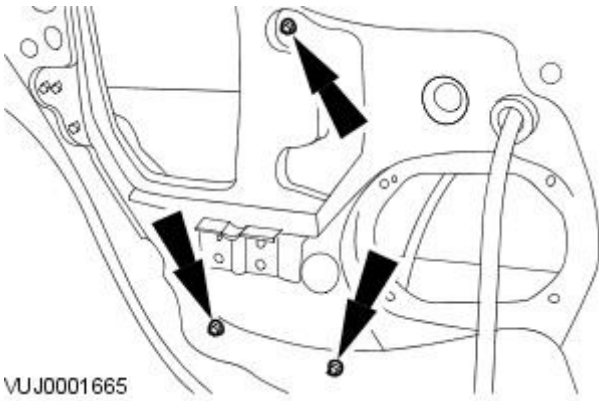


1. To install, reverse the removal procedure.
2. Tighten to 6 Nm.

GETtheMANUALS.org

# Glass, Frames and Mechanisms - Rear Window Glass

Removal and Installation

| Special Tool(s) | |
|---|---|
| BTB-WK9 | Spray Bottle<br><br>WK9 |
| 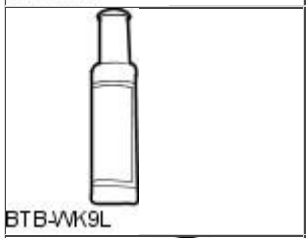 BTB-WK9L | Lubricant Concentrate<br><br>WK9L |
| 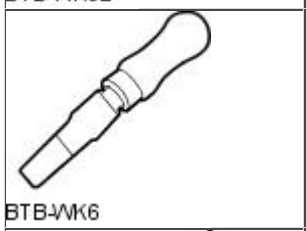 BTB-WK6 | Adhesive Removal Blade - Body<br><br>WK6 |
| 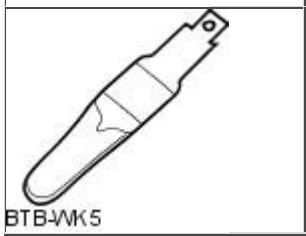 BTB-WK5 | Adhesive Removal Blade - Glass<br><br>WK5 |

## Removal

1. Remove the parcel shelf.
   For additional information, refer to Section 501-05 Interior Trim and Ornamentation.
2. NOTE: Left-hand shown, right-hand similar.

   Disconnect the electrical connectors.

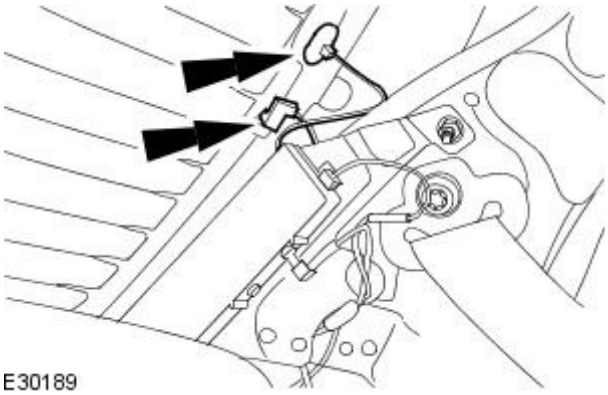


3. Apply protective tape around rear windshield glass aperture.

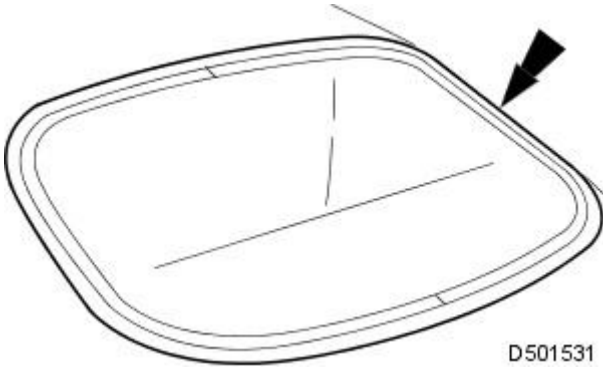


4. Place a protective sheet over the parcel shelf and place a protective board over the sheet.

GETtheMANUALS.org

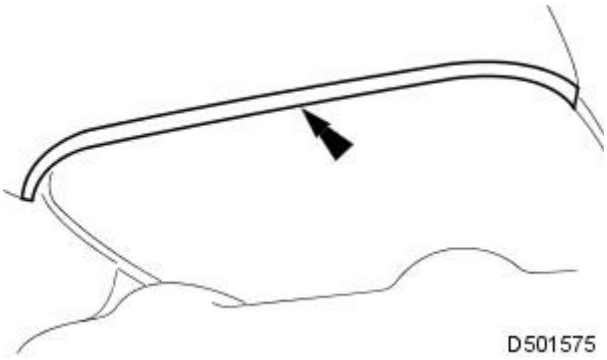


**5.** Apply suitable protective tape to inner edge of the roof panel.

**6.** Prepare cheese wire and cutting handle.

- Position cutting handle central tube fully upwards in handle.
- Cut a suitable length of cheese wire and pass one end through handle tube and locating aperture.
- Move cutting handle central tube downwards to secure cheese wire.

**7.** Using a suitable long bladed tool, penetrate rear window.

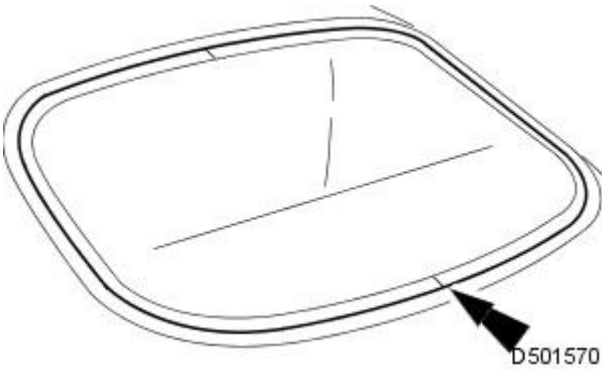


**8.** Remove tool, pass free end of cheese wire through penetration and install second cutting handle.

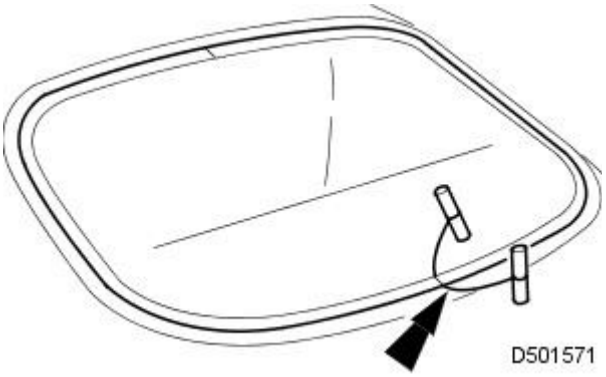


**9.** With assistance, use the cheese wire to cut around the rear windshield glass exercising particular care at the corners to avoid damage to paint.

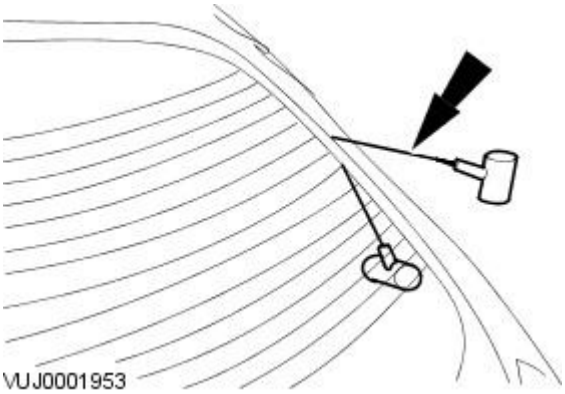


GETtheMANUALS.org

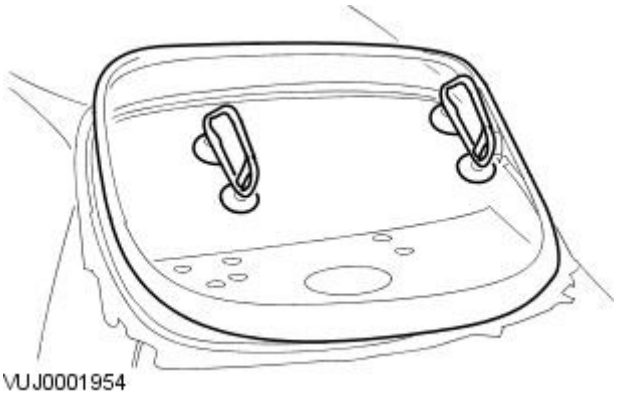


**10.** Install the lifting handles to the windshield glass,with assistance carefully remove the rear windshield glass from the vehicle and place on bench.

**11.** Remove the lifting handles from the rear windshield glass.

**12.** Remove cheese wire cutting tool from the vehicle, separate handles by moving centre tubes upwards and discard cheese wire.

**13.** Apply protective tape to the windshield glass aperture.

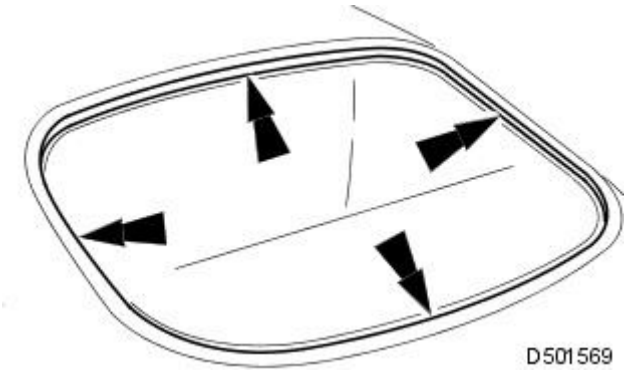


## Installation

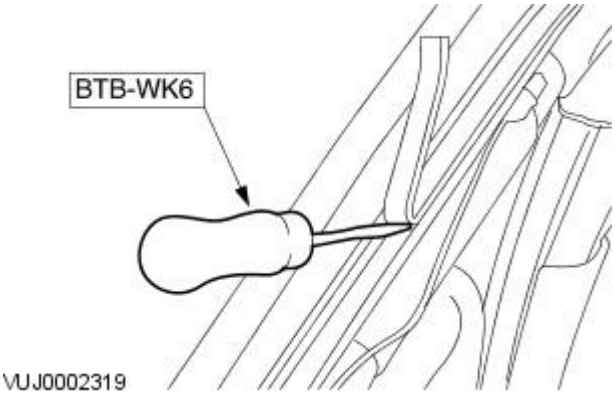


**1.** WARNINGS:

If the windshield glass is being installed at a temperature of 23 degrees(Centigrade), 73 degrees(Farenheit)or above make sure the vehicle is not driven for at least 1 hour after installation.

If the windshield glass is being installed at a temperature of 11 degrees(Centigrade), 23 degrees(Farenheit) make sure the vehicle is not driven for at least 1.5 hours after installation.

If the windshield glass is being installed at a temperature of 5 degrees(Centigrade), 11 degrees(Farenheit) make sure the vehicle is not driven for at least 2 hours after installation.

If the windshield glass is being installed at a temperature below 5 degrees(Centigrade),41 degrees(Farenheit) use heat and make sure the windshield glass adhesive has set before the vehicle is driven.

• CAUTIONS:

When installing the windshield glass, do not strike it in any way as this will crack the glass.

Make sure the windshield glass does not move out of position in the windshield glass aperture.

• NOTE: To aid bonding of a new windshield glass, make sure at least 1 mm (0.04 in) of residual adhesive remains on the body flange.

• NOTE: If the original windshield glass is to be installed remove the residual adhesive from windshield glass mating surface using a suitable scraper.

Using the special tool, remove any residual adhesive from the body.

GETtheMANUALS.org

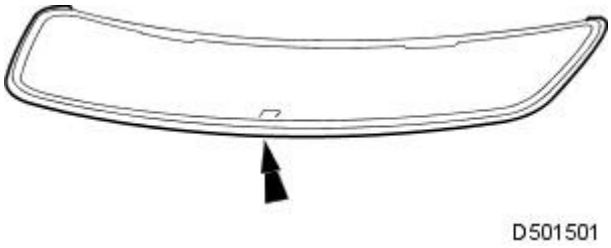


**2.** Thoroughly clean windshield glass surface using Betawipe spirit.

**3.** Apply primer to mating face of rear windshield glass.

**4.** Cut Betaseal nozzle to achieve a triangular section bead 8mm ( 0.32 in) wide by 10mm (0.4 in) high.

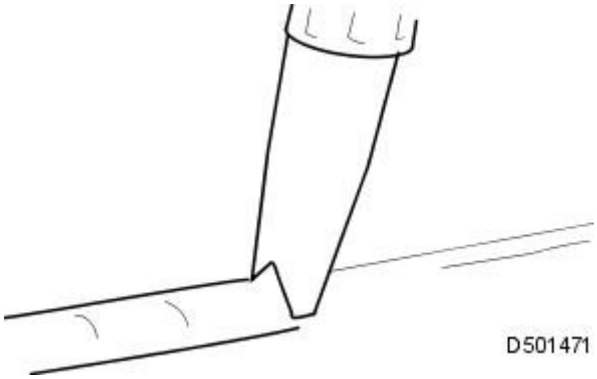


**5.** Using a suitable pneumatic application gun, apply a uniform bead of adhesive to the windshield glass edge commencing at bottom center and overlapping the ends approximately 14 mm (0.56 in).

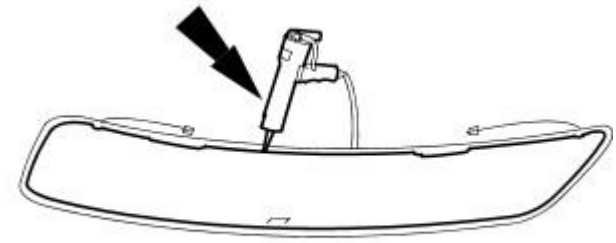


**6.** CAUTION: When installing the windshield glass, do not strike it in any way as this will crack the windshield glass.

With assistance carefully install windshield glass into the aperture.Aligning the windshield glass with the body markings and press firmly into place.

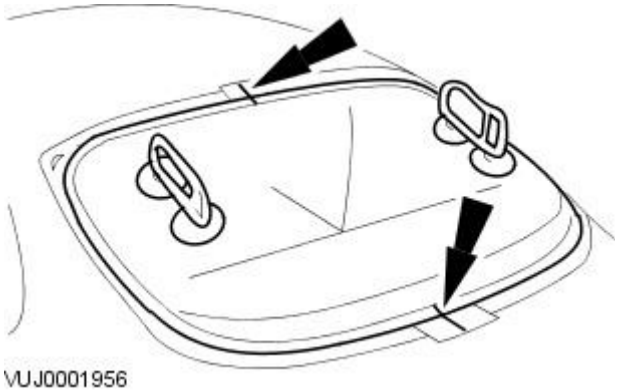


**7.** Remove the lifting handles.

**8.** Remove protective tape from rear edge of headlining.

**9.** CAUTION: Do not connect the electrical connectors for at least 1 hour after installation of the windshield glass. Failure to follow these instructions may result in damage to the windshield glass adhesive.

- NOTE: Left-hand shown, right-hand similar.

Connect the electrical connectors.

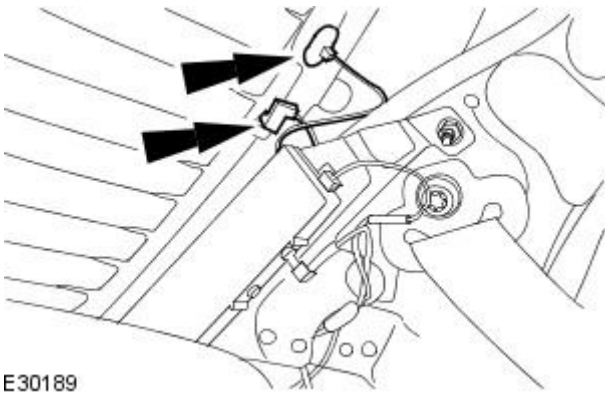


**10.** Install the parcel shelf.
For additional information, refer to Section 501-05 Interior Trim and Ornamentation.

GETtheMANUALS.org

# Glass, Frames and Mechanisms - Window Control Switch

Removal and Installation

## Removal

1. Remove the front door trim panel.
   For additional information, refer to Section 501-05 Interior Trim and Ornamentation.
2. Disconnect the window control switch electrical connector.
   1. Remove the electrical harness retaining screw.
   2. Disconnect the window control switch electrical connector.

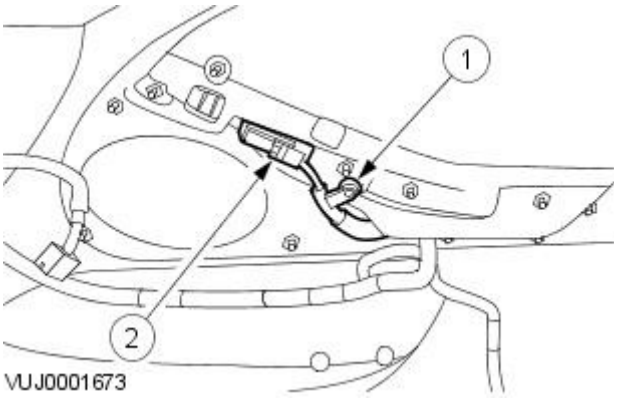


VUJ0001673

3. Remove the front door trim panel armrest.

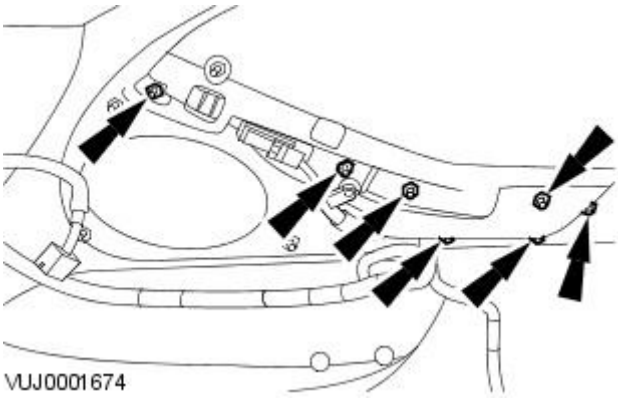

VUJ0001674

4. Remove the front door window control switch.

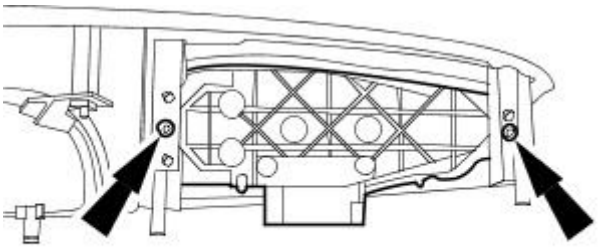

VUJ0001675

## Installation

1. To install, reverse the removal procedure.

GETtheMANUALS.org

# Glass, Frames and Mechanisms - Windshield Glass Using Cheese Wire

Removal and Installation

| Special Tool(s) | |
|---|---|
| BTB-WK9 | Spray Bottle<br><br>WK9 |
| 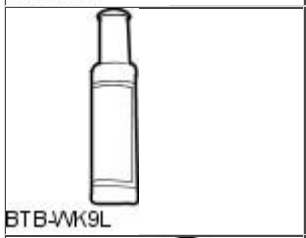 BTB-WK9L | Lubricant Concentrate<br><br>WK9L |
| 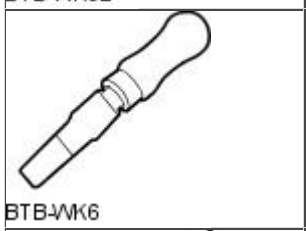 BTB-WK6 | Adhesive Removal Blade - Body<br><br>WK6 |
| 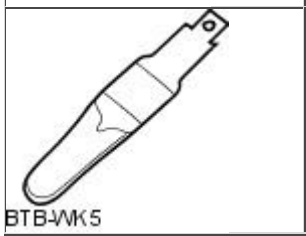 BTB-WK5 | Adhesive Removal Blade - Glass<br><br>WK5 |

## Removal

1. Remove the interior mirror.
   For additional information, refer to Section 501-09 Rear View Mirrors.
2. Remove both A- pillar trim panels.
   For additional information, refer to Section 501-05 Interior Trim and Ornamentation.
3. Remove both sun visors.
   For additional information, refer to Section 501-05 Interior Trim and Ornamentation.
4. Remove the overhead console.
   For additional information, refer to Section 501-12 Instrument Panel and Console.
5. NOTE: Left-hand shown, right-hand similar.

   Disconnect the heated windshield electrical connector.

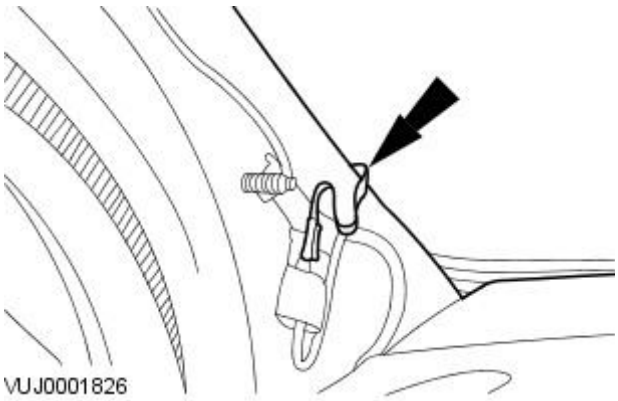


GETtheMANUALS.org

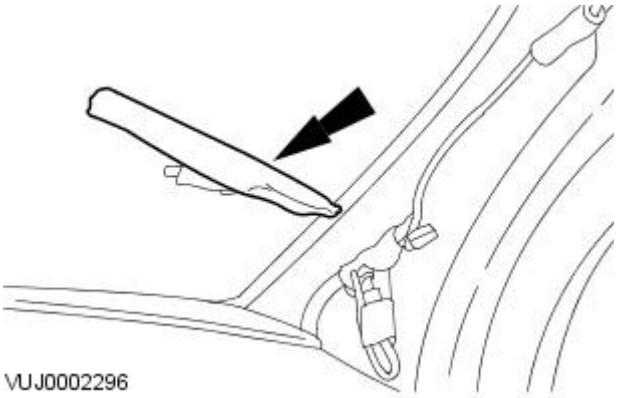


**6.** NOTE: Right-hand shown, left-hand similar.

Apply protective tape to the heated windshield electrical harness.

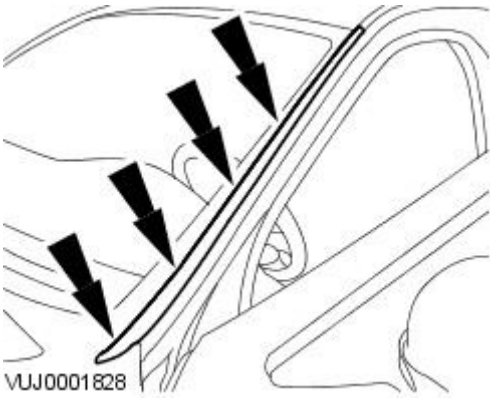


**7.** Remove the A- pillar windshield moulding.

**8.** Remove the cowl vent screen.
For additional information, refer to Section 501-02 Front End Body Panels.

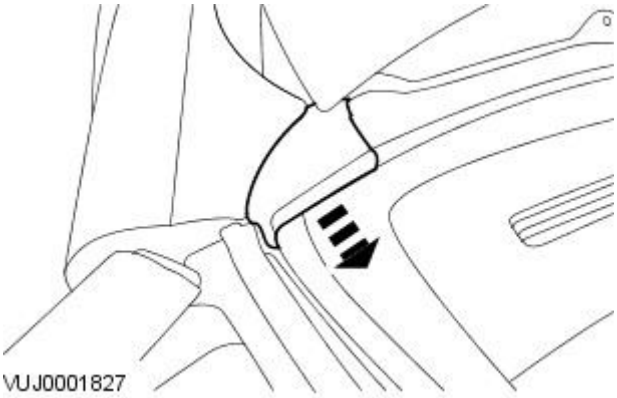


**9.** NOTE: Left-hand shown, right hand similar.

Remove both cowl vent screen finish panels.

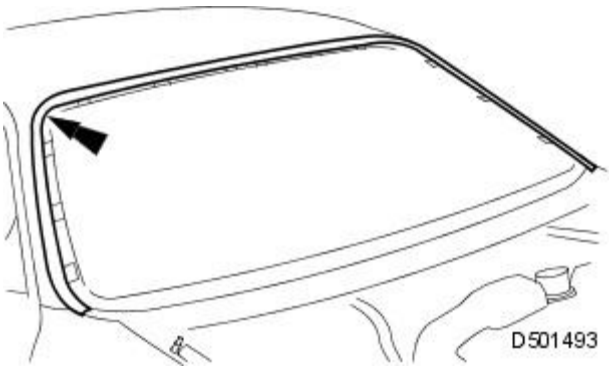


**10.** Apply protective tape around windshield glass aperture to protect paintwork.

GETtheMANUALS.org

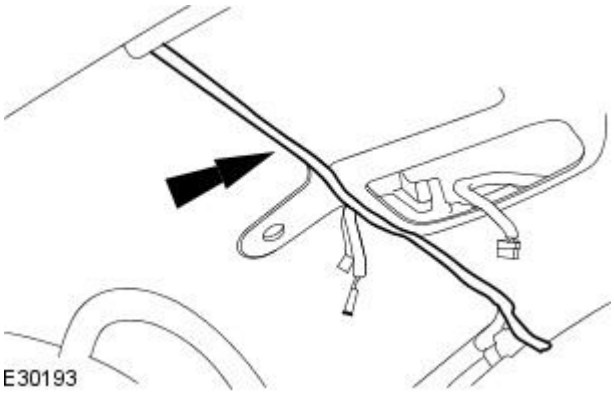


**11.** Apply suitable protective tape around leading edge of headlining.

**12.** Place a suitable protective sheet over fascia and place a protecting board over sheet

**13.** Prepare cheese wire and cutting handle.

- Position cutting handle central tube fully upwards in handle.
- Cut a suitable length of cheese wire and pass one end through handle tube and locating aperture.
- Move cutting handle central tube downwards to secure cheese wire.

**14.** Using a suitable long bladed tool, penetrate Betaseal approximately 150mm from the top of one A pillar.

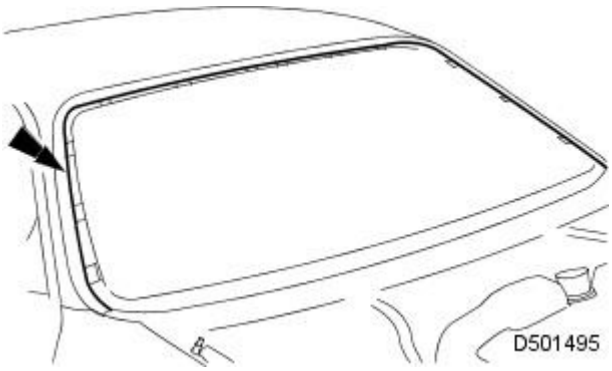


**15.** Remove tool, pass free end cheese wire through penetration and install second cutting handle.

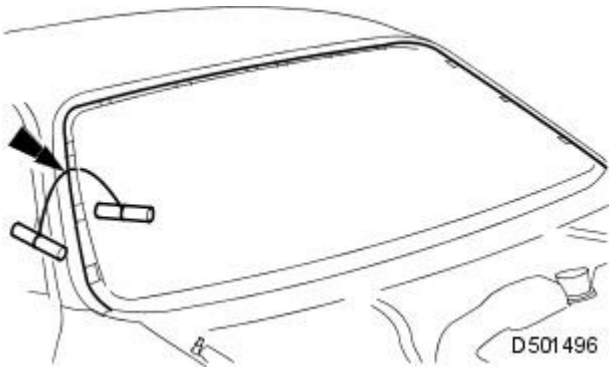


**16.** CAUTION: When cutting, do not allow cheese wire to contact edge of windshield glass as this will crack the windshield glass.

With assistance and exercising care at the corners to avoid damaging paintwork, cut around windshield glass commencing downwards and along the bottom.

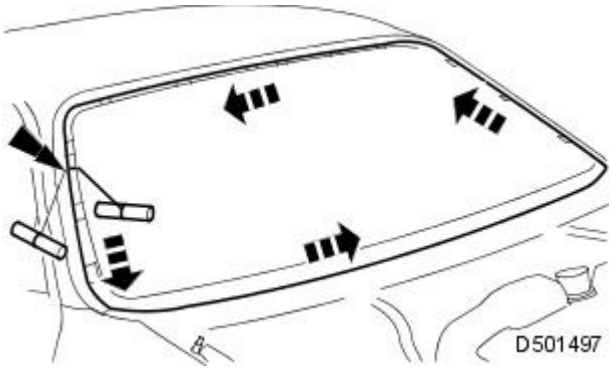


GETtheMANUALS.org

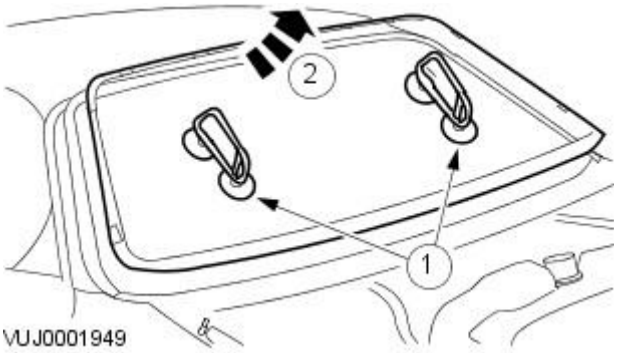


**17.** With assistance and exercising care, remove the windshield glass.

1. Attach lifting handles to windshield glass.
2. Remove the windshield glass.

**18.** Remove lifting handles from windshield glass.

**19.** Remove cheese wire cutter from windshield glass aperture, remove cutting handles and discard cheese wire.

## Installation

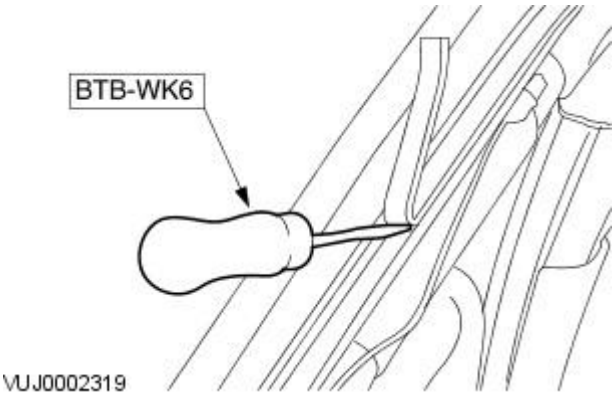


**1.** WARNINGS:

If the windshield glass is being installed at a temperature of 23 degrees(Centigrade), 73 degrees(Farenheit)or above make sure the vehicle is not driven for at least 1 hour after installation.

If the windshield glass is being installed at a temperature of 11 degrees(Centigrade), 23 degrees(Farenheit) make sure the vehicle is not driven for at least 1.5 hours after installation.

If the windshield glass is being installed at a temperature of 5 degrees(Centigrade), 11 degrees(Farenheit) make sure the vehicle is not driven for at least 2 hours after installation.

If the windshield glass is being installed at a temperature below 5 degrees(Centigrade),41 degrees(Farenheit) use heat and make sure the windshield glass adhesive has set before the vehicle is driven.

• CAUTIONS:

When installing the windshield glass, do not strike it in any way as this will crack the glass.

Make sure the windshield glass does not move out of position in the windshield glass aperture.

• NOTE: If the original windshield glass is to be installed remove the residual adhesive from windshield glass mating surface using the special tool.

Using the special tool, remove any residual adhesive from the body.

**2.** Thoroughly clean windshield glass surface using Betawipe spirit.

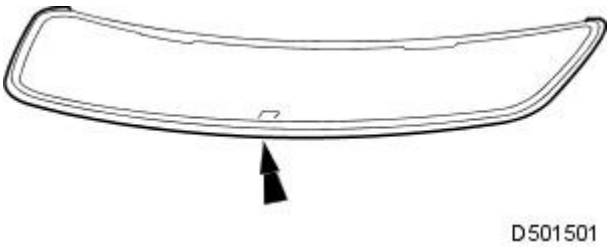


**3.** Apply primer to mating face of windshield glass.

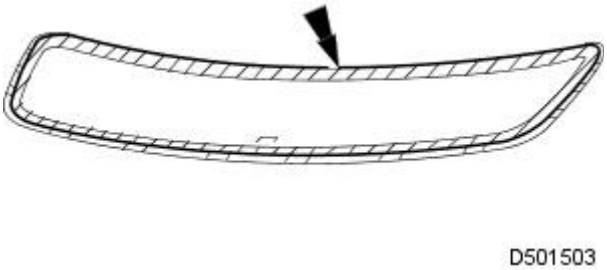


GETtheMANUALS.org

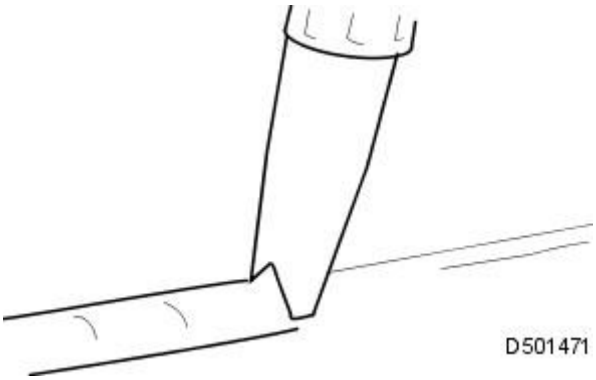


**4.** Cut Betaseal nozzle to achieve a triangular section bead 8mm ( 0.32 in) wide by 10mm (0.4 in) high.

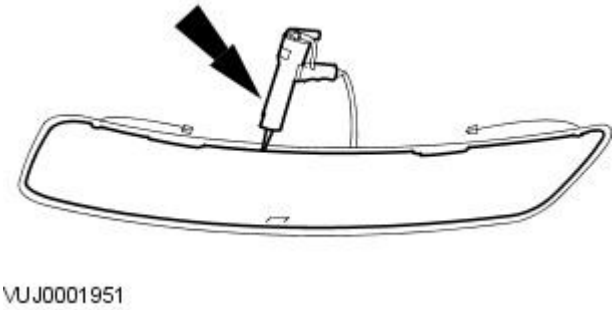


**5.** Using a suitable pneumatic application gun, apply a uniform bead of adhesive to the windshield glass edge commencing at bottom center and overlapping the ends approximately 14 mm (0.56 in).

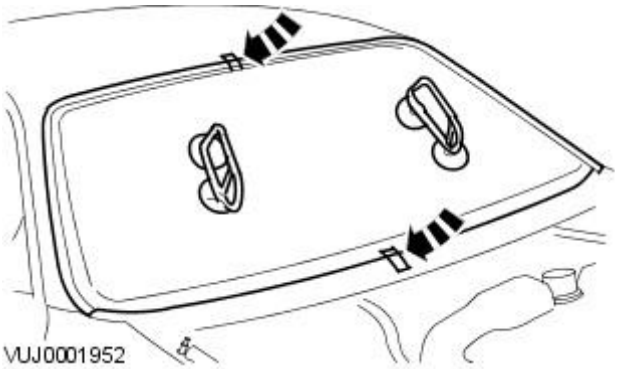


**6.** CAUTION: When installing the windshield glass, do not strike it in any way as this will crack the windshield glass.

With assistance carefully install windshield glass into the aperture.Aligning the windshield glass with the body markings and press firmly into place.

**7.** Remove the lifting handles.

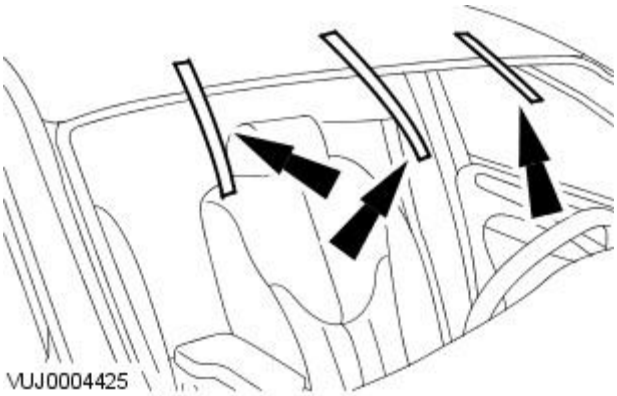


**8.** CAUTION: Make sure the windshield glass does not move out of position in the windshield glass aperture.

Apply suitable protective tape to the top of the windshield glass.

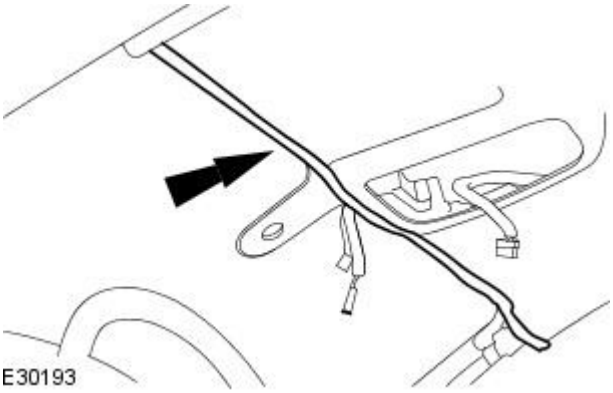


**9.** Remove protective tape from leading edge of headlining.

**10.** Remove the protective sheet and the protective board from the fascia.

GETtheMANUALS.org

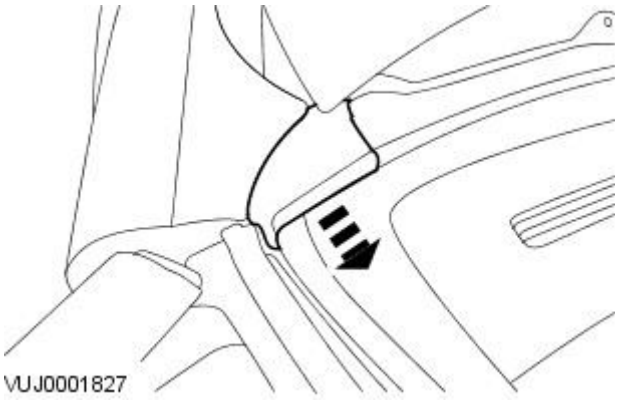


**11.** NOTE: Left-hand shown , right hand similar.

Install both cowl vent screen finish panels.

**12.** Install the cowl vent screen.
For additional information, refer to Section 501-02 Front End Body Panels.

**13.** Install both A-pillar windshield mouldings.

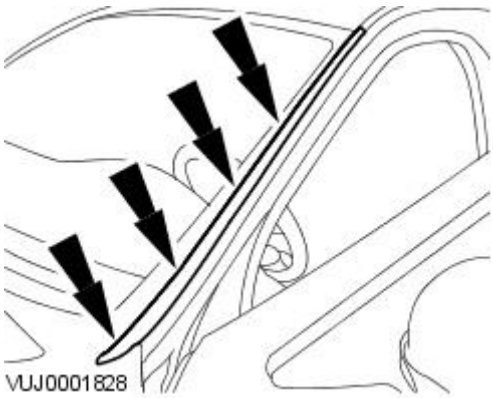


**14.** NOTE: Left-hand shown, right-hand similar.

Reconnect the heated windshield electrical connector.

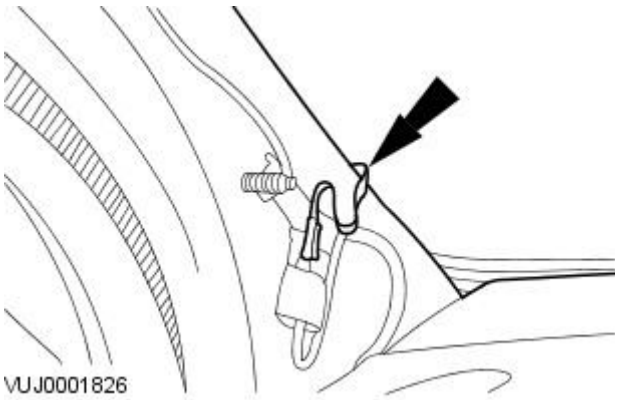


**15.** Install the overhead console.
For additional information, refer to Section 501-12 Instrument Panel and Console.

**16.** Install both sunvisors.
For additional information, refer to Section 501-05 Interior Trim and Ornamentation.

**17.** Install both A-pillar trim panels.
For additional information, refer to Section 501-05 Interior Trim and Ornamentation.

**18.** Install the interior mirror.
For additional information, refer to Section 501-09 Rear View Mirrors.

GETtheMANUALS.org

# Glass, Frames and Mechanisms - Windshield Glass Using Cutting Tool

Removal and Installation

| Special Tool(s) | |
|---|---|
| BTB-WK9 | Spray Bottle<br>WK9 |
| 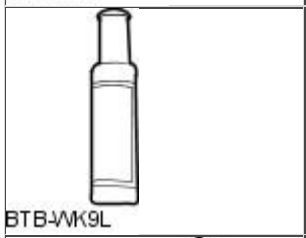 BTB-WK9L | Lubricant Concentrate<br>WK9L |
| 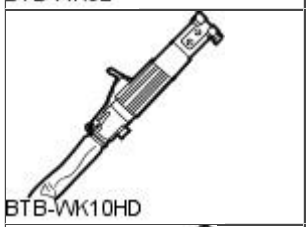 BTB-WK10HD | Power Cutting Tool<br>WK10HD |
| 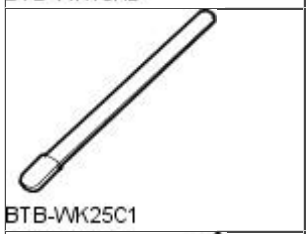 BTB-WK25C1 | Depth Controller Arm<br>WK25C1 |
| 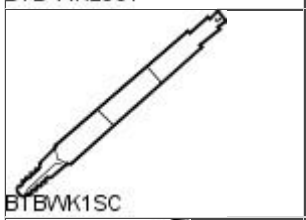 BTBWK1SC | Cutting Blade - Lower<br>WK1SC |
| 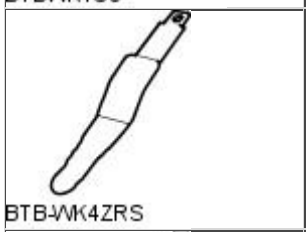 BTB-WK4ZRS | Cutting Blade - Upper<br>WK4ZRSC |
| 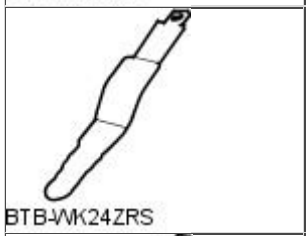 BTB-WK24ZRS | Cutting Blade - Upper<br>WK24ZRSC |
| BTB-WK24ZS | Cutting Blade - Side<br>WK24ZSC |
| 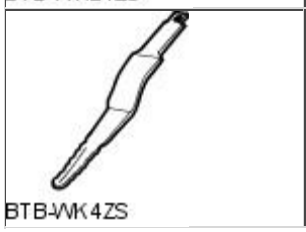 BTB-WK4ZS | Cutting Blade - Side<br>WK4ZSC |

GETtheMANUALS.org

| | |
|---|---|
| 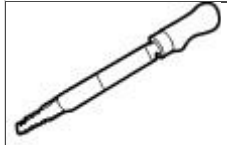 BTB-WK2-SC | Cutting Blade - Side<br>WK2SC |
| 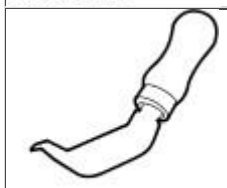 BTB-WK27 | Cutting Blade - Left-hand<br>WK27 |
| 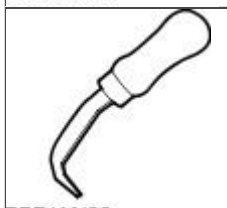 BTB-WK28 | Cutting Blade - Right-hand<br>WK28 |
| 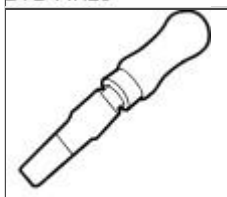 BTB-WK6 | Adhesive Removal Blade - Body<br>WK6 |
| BTB-WK5 | Adhesive Removal Blade - Glass<br>WK5 |

## Removal

1. Remove the interior mirror.
   For additional information, refer to Section 501-09 Rear View Mirrors.
2. Remove both A-pillar trim panels.
   For additional information, refer to Section 501-05 Interior Trim and Ornamentation.
3. Remove both sun visors.
   For additional information, refer to Section 501-05 Interior Trim and Ornamentation.
4. Remove the overhead console.
   For additional information, refer to Section 501-12 Instrument Panel and Console.
5. NOTE: Left-hand electrical connector shown, right-hand similar.

   Disconnect the heated windshield electrical connector.

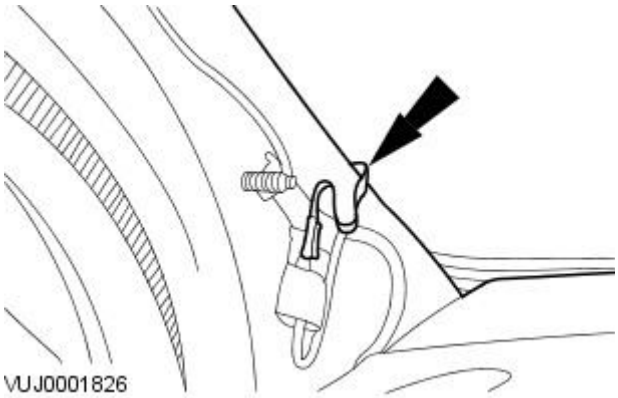


GETtheMANUALS.org

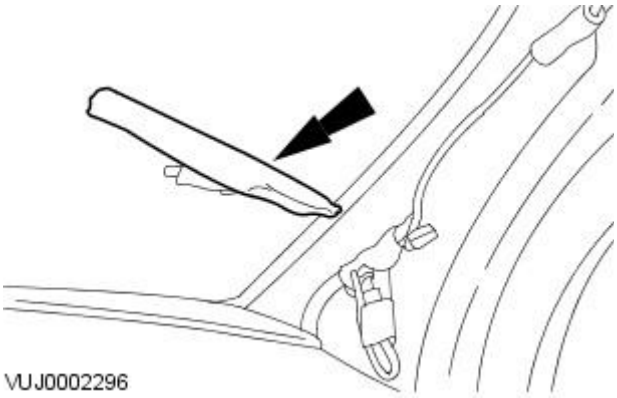


**6.** NOTE: Right-hand shown, left-hand similar.

Apply protective tape to the heated windshield electrical harness.

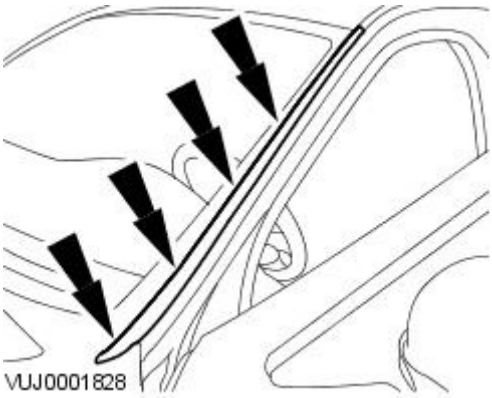


**7.** Remove the A-pillar windshield moulding.

**8.** Remove the cowl vent screen.
For additional information, refer to Section 501-02 Front End Body Panels.

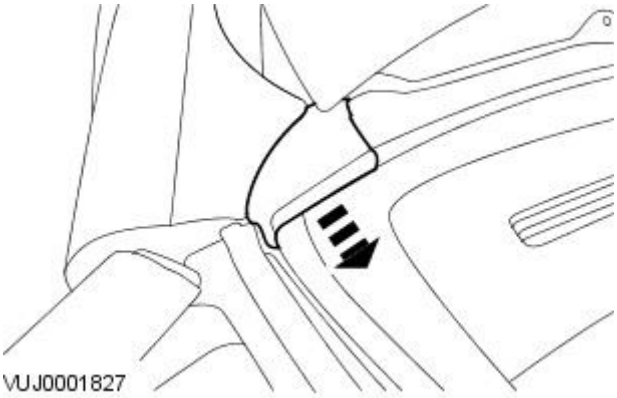


**9.** NOTE: Left-hand shown, right hand similar.

Remove both cowl vent screen finish panels.

**10.** Apply protective tape around windshield glass aperture to protect paintwork.

**11.** Apply suitable protective tape around leading edge of headlining.

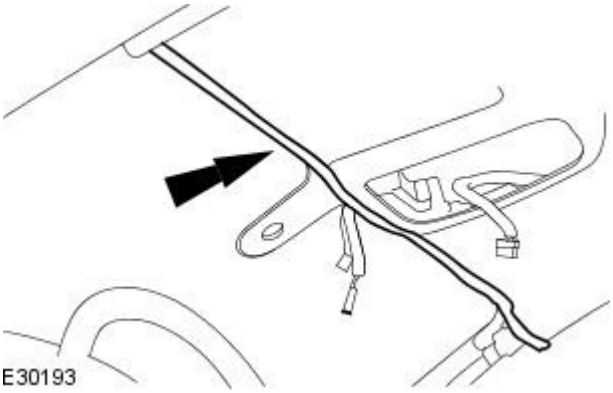


**12.** Place a suitable protective sheet over fascia and place a protecting board over sheet.

**13.** Dispense 20ml of WK9L lubricant into the WK9 spray bottle, fill the spray bottle with water and mix.

**14.** Apply cutting lubricant to the lower windshield glass adhesive and approximately 150 mm (6 in) up the A-pillar.

**15.** Install the cutting tool blade BTB-WK1SC to the cutting tool BTB-WK10HD.

GETtheMANUALS.org

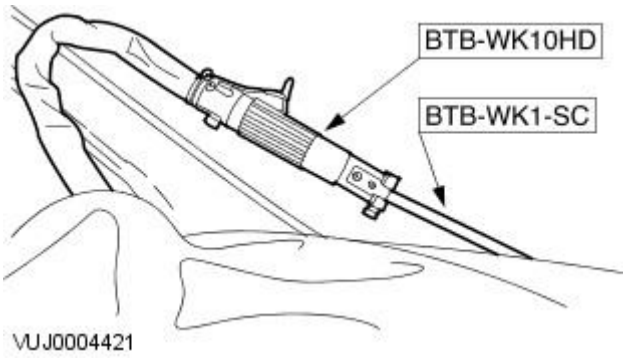


**16.** Using the special tool cut through the lower windshield glass adhesive and approximately 150 mm (6 in) up the A-pillar.

**17.** Apply cutting lubricant to both sides of the A-pillar glass adhesive.

**18.** NOTE: Remove the cutting tool blade BTB-WK1SC from the cutting tool BTB-WK10HD.

Install the cutting tool side cutting blade BTB-WK24ZS and the cutting tool controller arm BTB-WK11B to the cutting tool BTB-WK10HD.

Set the cutting tool controller arm to 20 mm.

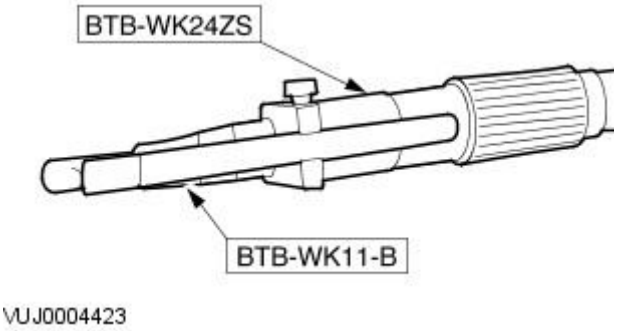


**19.** NOTE: Right-hand shown, left-hand similar.

• NOTE: Start cutting the windshield glass adhesive from the top of the A-pillar downwards.

Using the special tool cut through the A-pillar windshield glass adhesive.

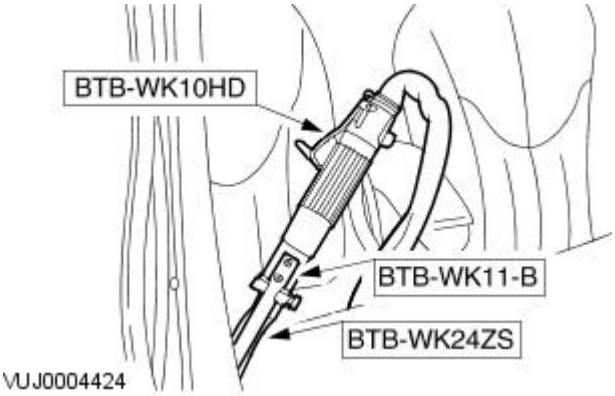


**20.** Apply cutting lubricant to the top of the windshield glass.

**21.** Apply protective tape to the top of the windshield glass.

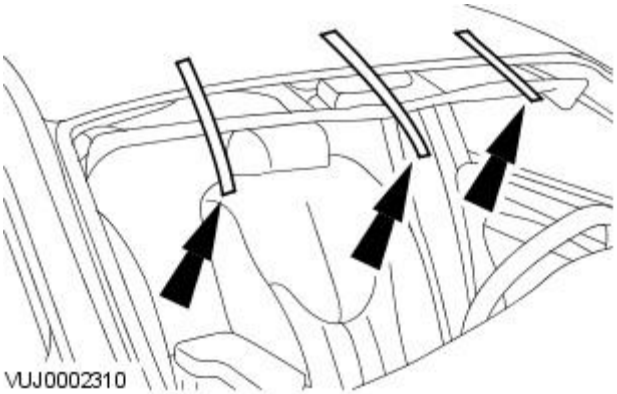


**22.** NOTE: Start cutting from either corner into the centre and continue the cut all the way through to the other corner. DO NOT cut from each corner into the centre as the pressure on the centre of the windshield glass could cause breakage.

Using the special tool cut through the top of the windshield glass adhesive.

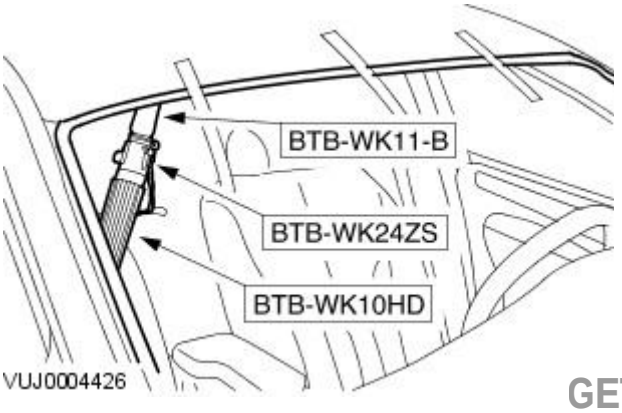


GETtheMANUALS.org

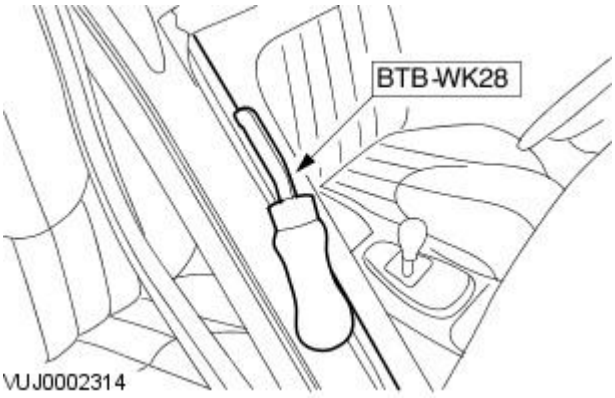


**23.** Using the special tool cut through the right-hand side A-pillar remaining adhesive.

VUJ0002300

**24.** Using the special tool cut through the left-hand side A-pillar remaining adhesive.

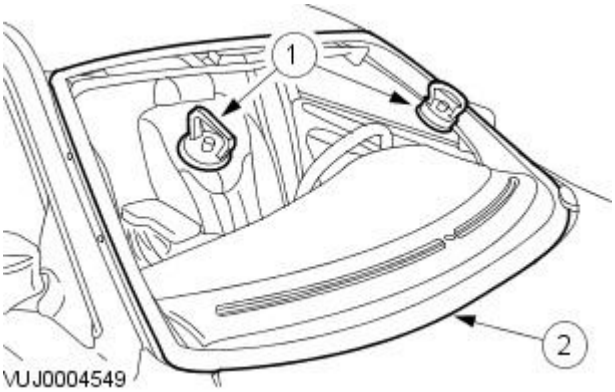


**25.** With assistance and exercising care, remove the windshield glass.

1. Attach lifting handles to the windshield glass.
2. Remove the windshield glass.

**26.** Remove lifting handles from the windshield glass.

## Installation

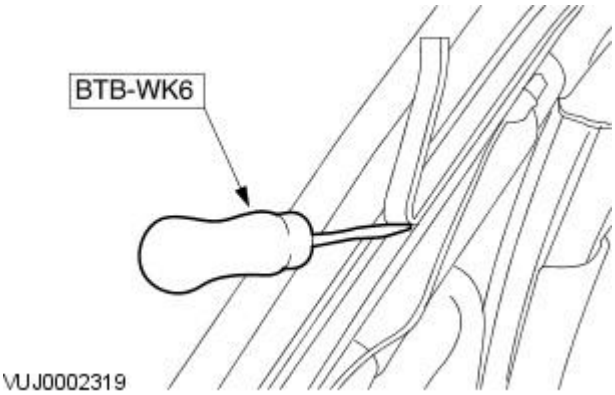


**1.** WARNINGS:

If the windshield glass is being installed at a temperature of 23 degrees(Centigrade), 73 degrees(Farenheit)or above make sure the vehicle is not driven for at least 1 hour after installation.

If the windshield glass is being installed at a temperature of 11 degrees(Centigrade), 23 degrees(Farenheit) make sure the vehicle is not driven for at least 1.5 hours after installation.

If the windshield glass is being installed at a temperature of 5 degrees(Centigrade), 11 degrees(Farenheit) make sure the vehicle is not driven for at least 2 hours after installation.

If the windshield glass is being installed at a temperature below 5 degrees(Centigrade),41 degrees(Farenheit) use heat and make sure the windshield glass adhesive has set before the vehicle is driven.

• CAUTIONS:

When installing the windshield glass, do not strike it in any way as this will crack the glass.

Make sure the windshield glass does not move out of position in the windshield glass aperture.

• NOTE: If the original windshield glass is to be installed remove the residual adhesive from windshield glass mating surface using the special tool.

Using the special tool, remove any residual adhesive from the body.

GETtheMANUALS.org

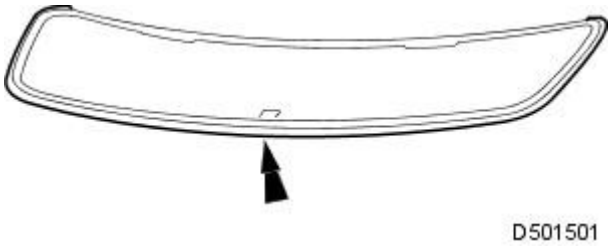


**2.** Thoroughly clean windshield glass surface using Betawipe spirit.

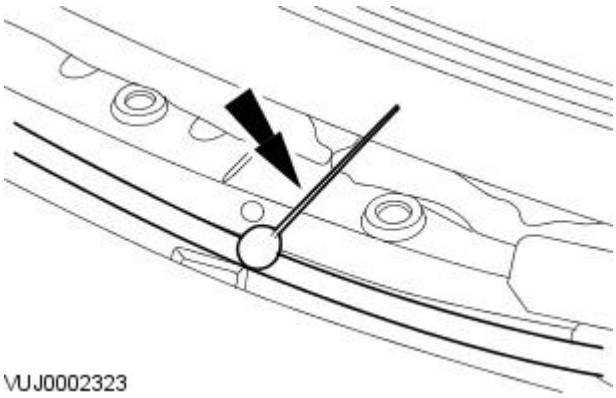


**3.** Apply primer to the mating face of the body.

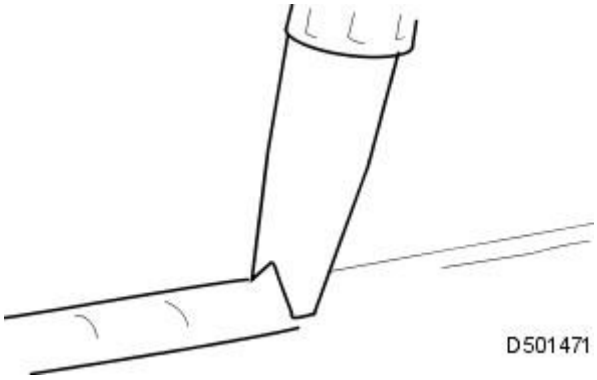


**4.** Cut adhesive nozzle to achieve a triangular section bead 8 mm (0.32 in) wide by 10 mm (0.4 in) high.

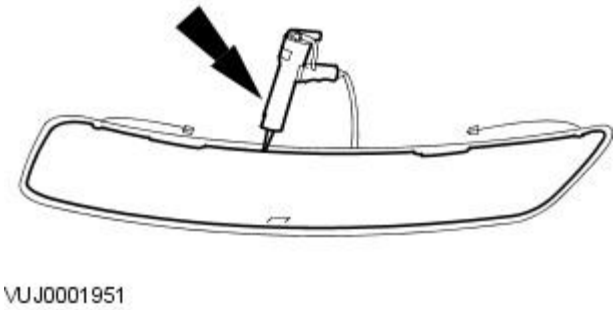


**5.** Using a suitable pneumatic application gun, apply a uniform bead of adhesive to the windshield glass edge commencing at the bottom center and overlapping the ends approximately 14 mm (0.56 in).

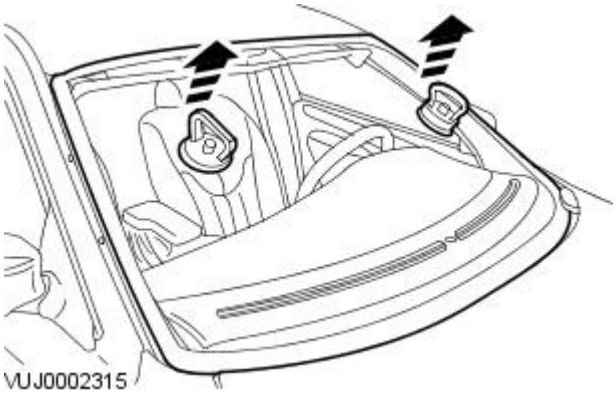


**6.** CAUTION: When installing the windshield glass, do not strike it in any way as this will crack the windshield glass.

With assistance carefully install the windshield glass into the aperture. Aligning the windshield glass with the body markings and press firmly into place.

**7.** Remove the lifting handles.

GETtheMANUALS.org

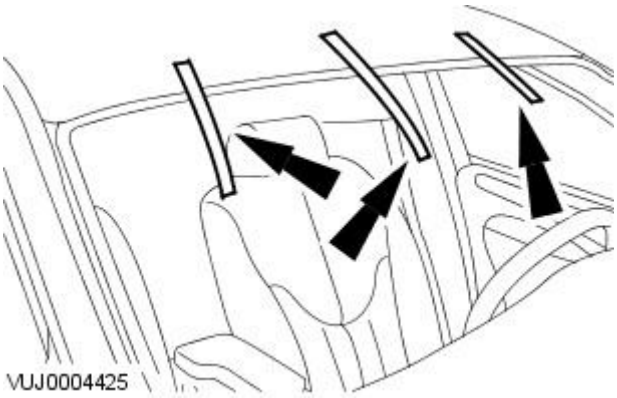


**8.** CAUTION: Make sure the windshield glass does not move out of position in the windshield glass aperture.

Apply suitable protective tape to the top of the windshield glass.

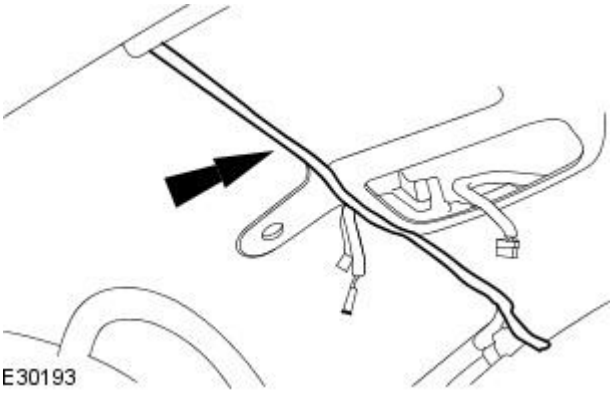


**9.** Remove protective tape from around the leading edge of the headlining.

**10.** Remove the protective sheet and the protective board from the fascia.

**11.** Install the lower A-pillar drainage channels.

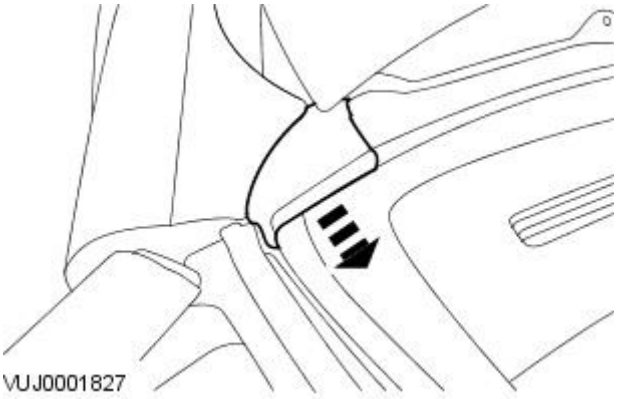


**12.** Install the cowl vent screen.
For additional information, refer to Section 501-02 Front End Body Panels.
.

**13.** Install both A-pillar windshield mouldings.

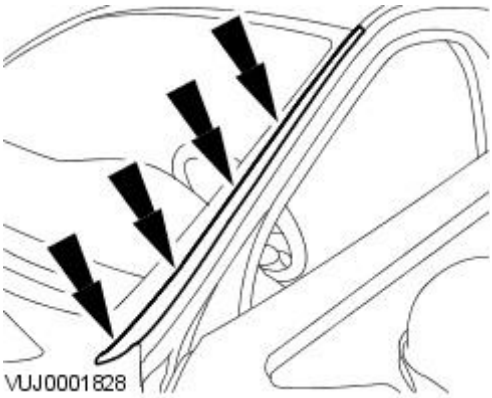


GETtheMANUALS.org

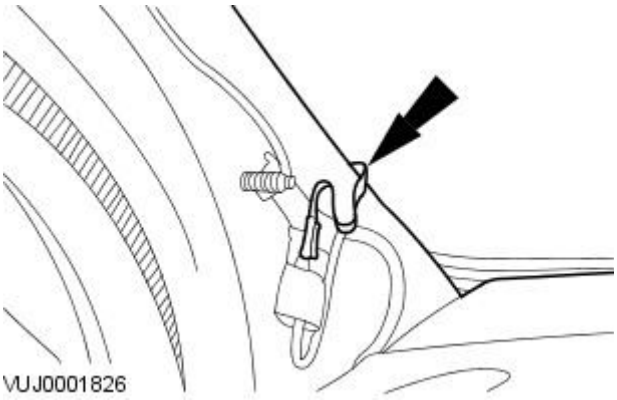


**14.** NOTE: Right-hand shown, left-hand similar.

Reconnect the heated windshield electrical connector.

**15.** Install the overhead console.
For additional information, refer to Section 501-12 Instrument Panel and Console.

**16.** Install the sunvisors.
For additional information, refer to Section 501-05 Interior Trim and Ornamentation.

**17.** Install both A-pillar trim panels.
For additional information, refer to Section 501-12 Instrument Panel and Console.

**18.** Install the interior mirror.
For additional information, refer to Section 501-09 Rear View Mirrors.

GETtheMANUALS.org

# Instrument Panel and Console -

**Torque Specifications**

| Description | Nm | lb-ft | lb-in |
|---|---|---|---|
| Instrument panel retaining bolts. | 20 | 15 | - |
| Floor console retaining nuts | 7 | - | 62 |
| Instrument panel support brackets retaining bolts | 5 | - | 44 |
| Instrument panel support brackets retaining nuts | 5 | - | 44 |
| Instrument panel center retaining screw | 2 | - | 18 |

GETtheMANUALS.org

# Instrument Panel and Console - Instrument Panel

Description and Operation

The instrument panel assembly houses the instrument cluster, passenger air bag module, glove compartment, message centre/headlamp leveling switch, luggage compartment lid/fuel flap release switch, in-vehicle temperature sensor, ignition switch, driver stowage box, remote climate control module (vehicles fitted with telematics), instrument panel lower trim panel, instrument panel finish panel and air distribution registers, all of which can be removed without removing the instrument panel. The instrument panel wiring harness is attached to the instrument panel to assist in easy removal and installation of the instrument panel. The instrument panel must be removed from the vehicle to gain access the wiring harness.

## Console

The floor console is located between the front seats and consists of the ashtray, cigar lighter and armrest. The optional telephone is incorporated within the center console if the vehicle is equipped with satellite navigation. Alternatively the center section of the console forms a deep stowage box with a secondary cupholder. In both cases the center console utilizes a rear hinged lid which is padded to form a central arm rest. Situated in the rear of the center console are further air distribution registers.

The roof console is located between the sun visors and, depending upon the vehicle options, consists of the front overhead courtesy light, two reading/map lights, remote convenience buttons, sun glasses holder and intrusion sensors.

The instrument panel console is located in the centre of the instrument panel. The instrument panel console consists of: The climate control assembly
For additional information, refer to Section 412-04 Control Components.
Vehicles fitted with telematics have a touch screen telematics control module taking place of the climate control assembly.
For additional information, refer to Section 419-05 Telematics.
The occupancy sensor For additional information, refer to Section 501-20A Safety Belt System / 501-20B Supplemental Restraint System.
The audio system
For additional information, refer to Section 415-01 Audio Unit.
The multi-switch pack consisting of, depending upon the vehicle options, heated seat switches, single point door locking switch, hazard warning switch and dynamic stability control switch.

GETtheMANUALS.org

# Instrument Panel and Console - Floor Console

Removal and Installation

## Removal

All vehicles

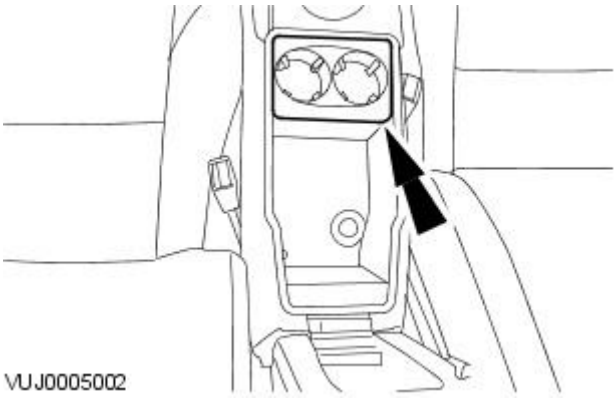


**1.** Remove the floor console cup holder.

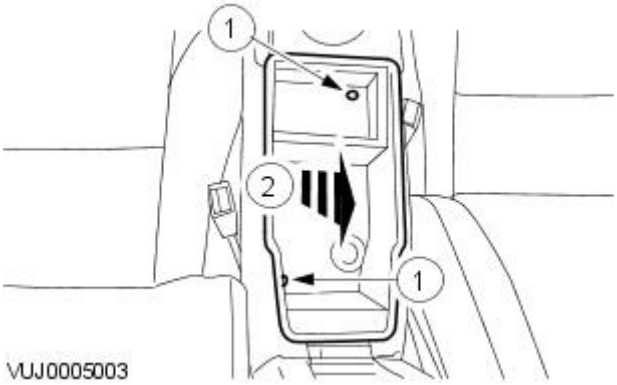


**2.** NOTE: Disconnect the auxiliary power point electrical connector if equipped.

Remove the floor console stowage compartment.

1. Remove the floor console stowage compartment retaining screws.
2. Remove the floor console stowage compartment.

Vehicles with cordless cellular phone

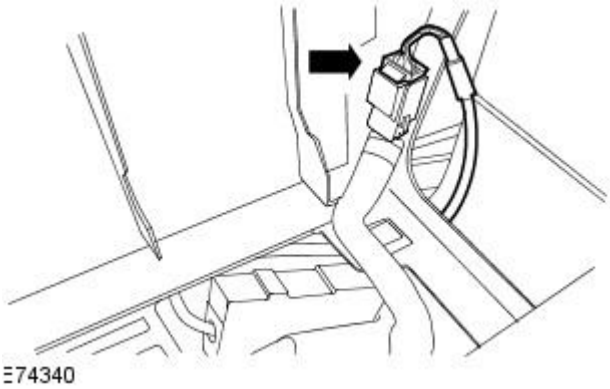


**3.** Disconnect the Bluetooth module electrical connector.

Vehicles with automatic transmission

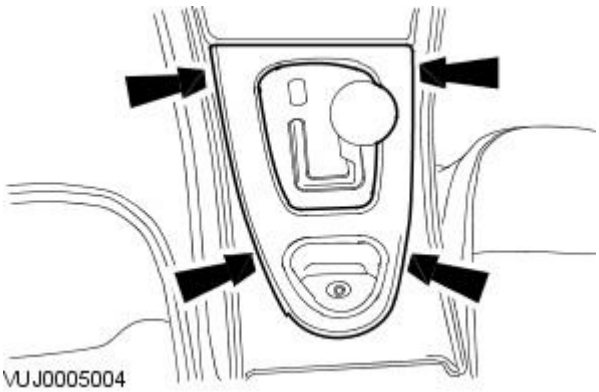


**4.** Remove the gearshift lever selector trim panel.

Vehicles with manual transmission

GETtheMANUALS.org

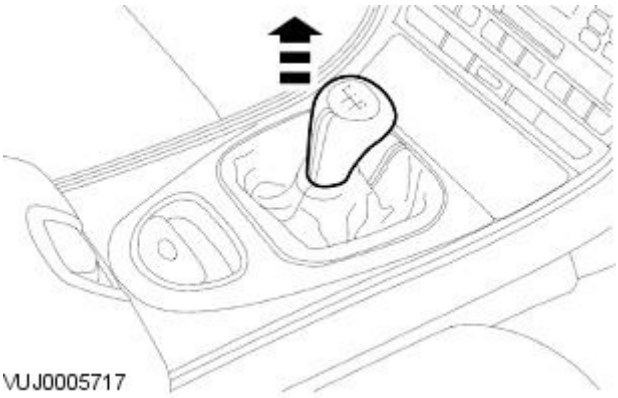


**5.** Remove the gearshift lever handle.

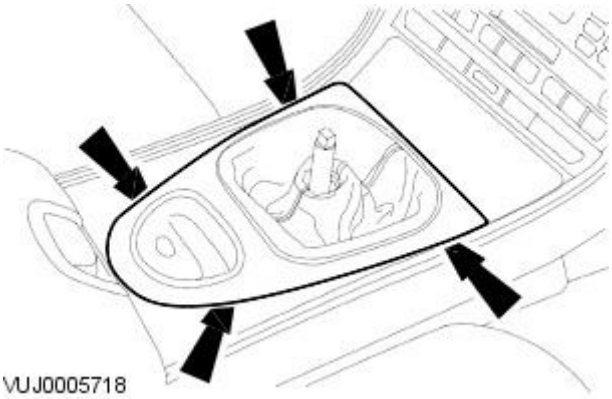


**6.** Remove the gear shift lever selector trim panel.

All vehicles

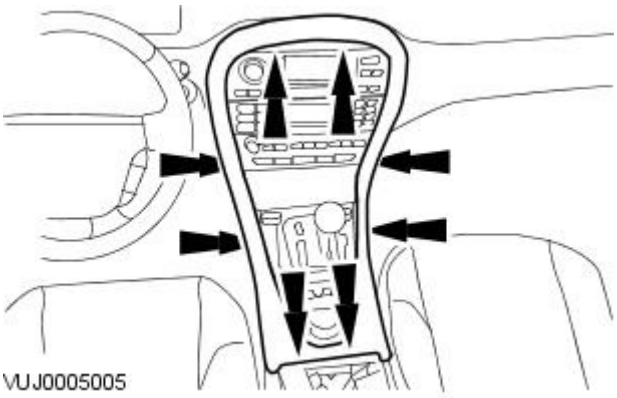


**7.** Remove the instrument panel console bezel

- Release the retaining tangs.

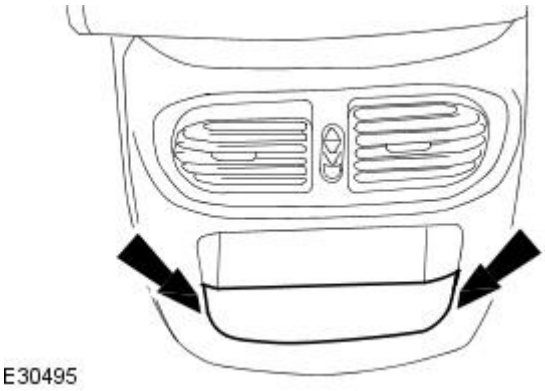


**8.** Remove the floor console rear stowage compartment.

- Release the retaining tangs.

GETtheMANUALS.org

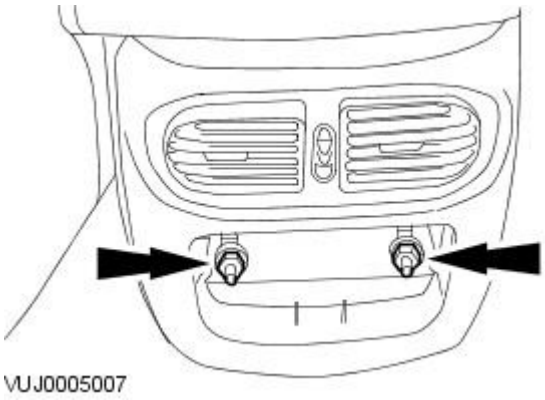


**9.** Remove the floor console rear retaining nuts.

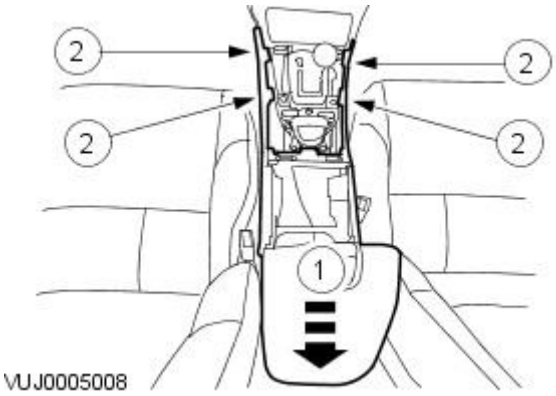


**10.** Remove the floor console.

1. Slide the floor console rearward.
2. Remove the floor console from the retaining tangs.

## Installation

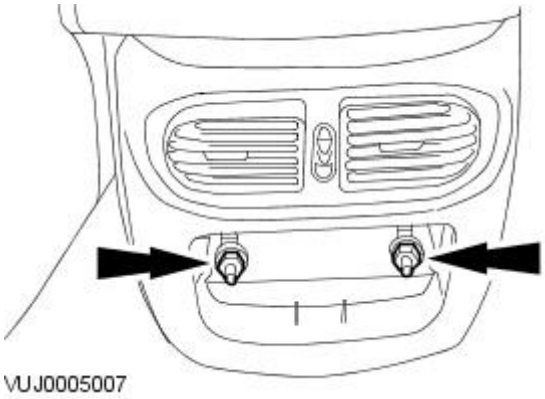


**1.** To install, reverse the removal procedure.

- Tighten to 7 Nm.

GETtheMANUALS.org

# Instrument Panel and Console - Glove Compartment

Removal and Installation

## Removal

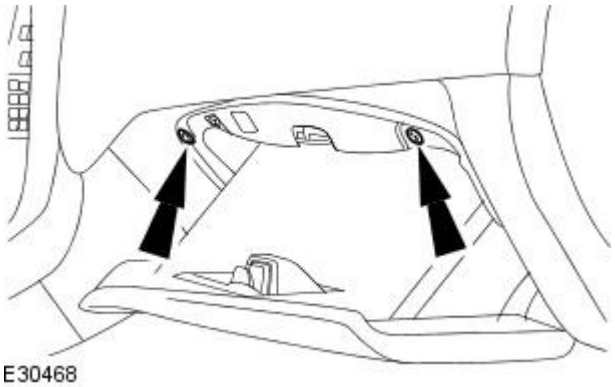


**1.** Loosen the glove compartment upper retaining screws.

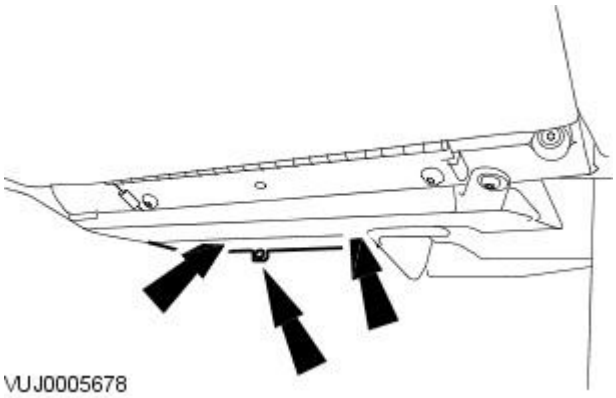


**2.** Detach the passenger side instrument panel lower trim panel.

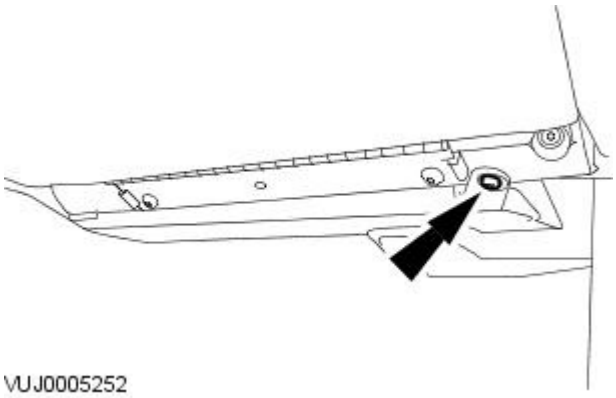


**3.** Remove the right-hand footwell duct retaining bolt.

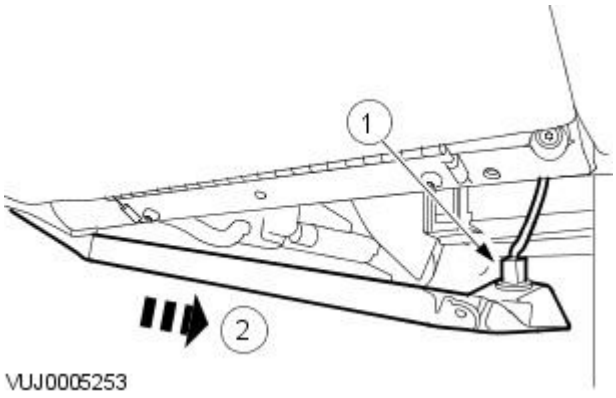


**4.** Remove the right-hand footwell duct .

1. Detach the footwell lamp from the right-hand footwell duct .
2. Remove the right-hand footwell duct .

GETtheMANUALS.org

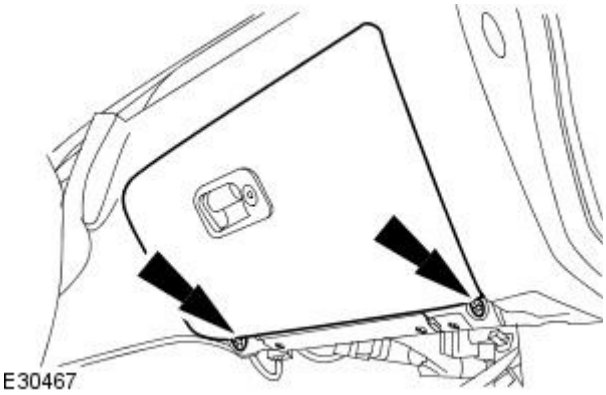


**5.** Detach the glove compartment.

- Remove the glove compartment lower retaining screws

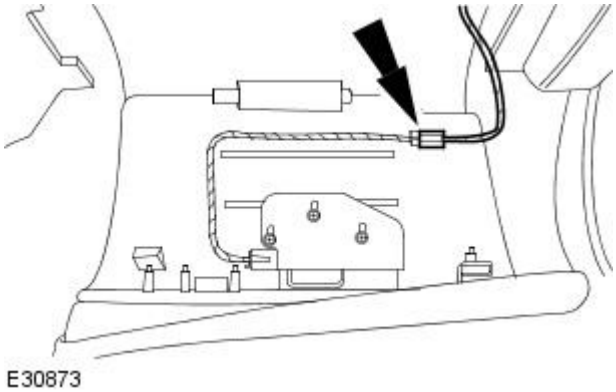


**6.** Remove the glove compartment.

- Disconnect the glove box electrical connector.

## Installation

**1.** To install, reverse the removal procedure.

GETtheMANUALS.org

# Instrument Panel and Console - Instrument Panel

Removal and Installation

## Removal

**1.** Remove the steering column.
For additional information, refer to Section 211-04 Steering Column.

**2.** Remove the floor console register duct.
For additional information, refer to Section 412-01 Air Distribution and Filtering.

**3.** Detach the instrument panel console multi-switch pack.

1. Remove the retaining screws.
2. Detach the instrument panel console multi-switch pack.

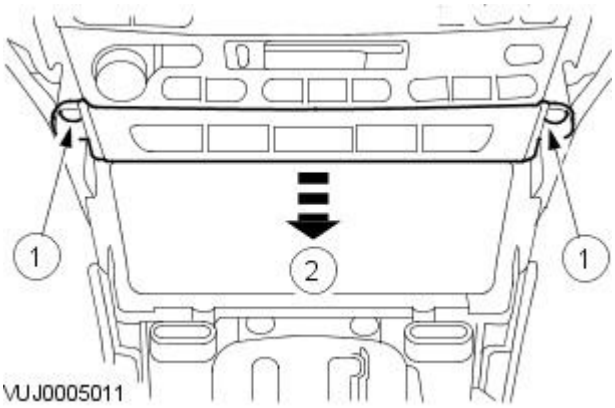


**4.** Remove the instrument panel console multi-switch pack.

1. Disconnect the instrument panel console multi-switch pack electrical connectors.
2. Remove the instrument panel console multi-switch pack.

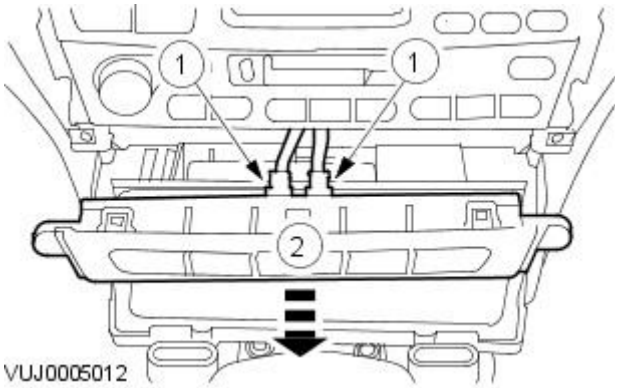


**5.** Open the ash tray.

**6.** Remove the ashtray retaining screw covers.

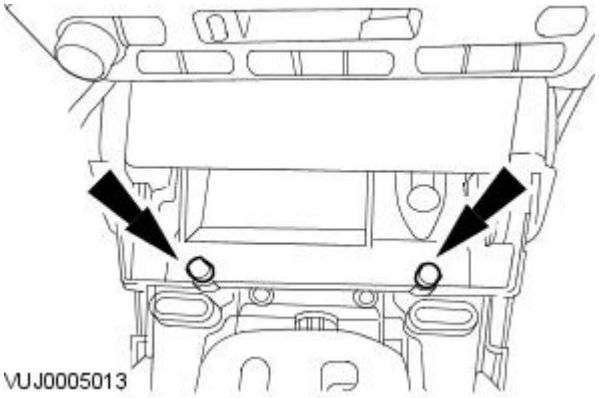


**7.** Remove the ashtray retaining screws.

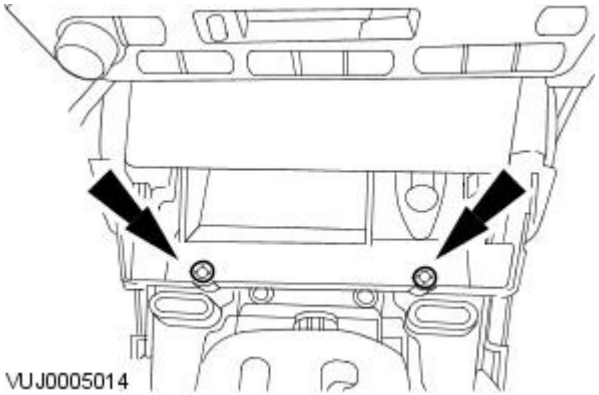


GETtheMANUALS.org

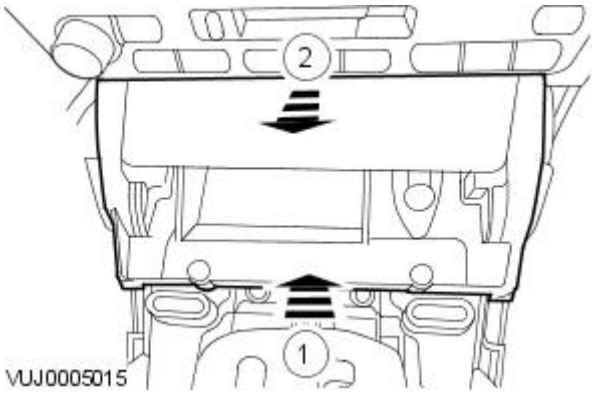


**8.** Detach the ashtray.

1. Release the ashtray from retaining tangs.
2. Detach the ashtray.

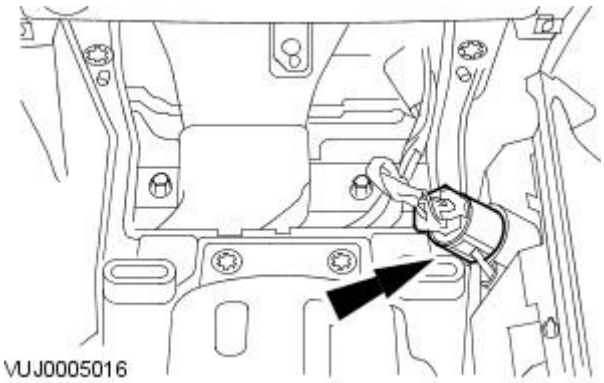


**9.** Remove the ashtray.

- Disconnect the electrical connector.
- Remove the ashtray.

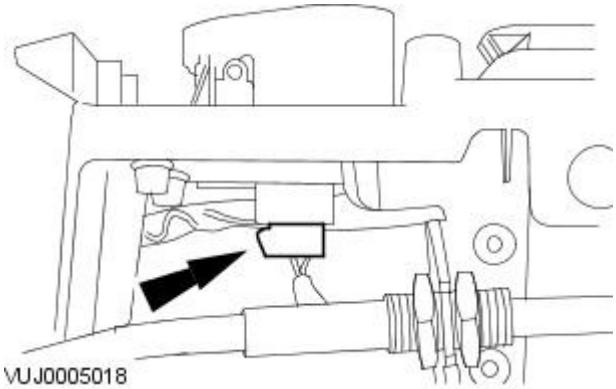


**10.** Disconnect the parking brake switch.

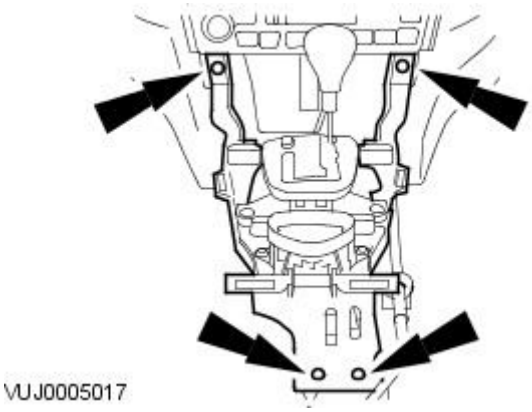


**11.** CAUTION: Make sure damage does not occur to the interior trim.

Reposition the floor console retaining bracket.

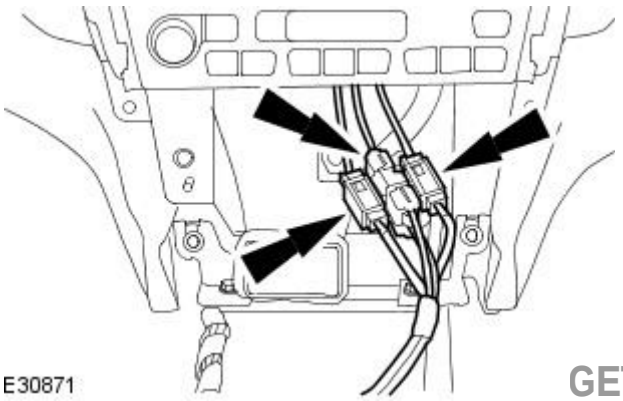


**12.** Disconnect the electrical connectors.

- Detach the electrical connectors from instrument panel support bracket.
- Disconnect the electrical connectors.

GETtheMANUALS.org

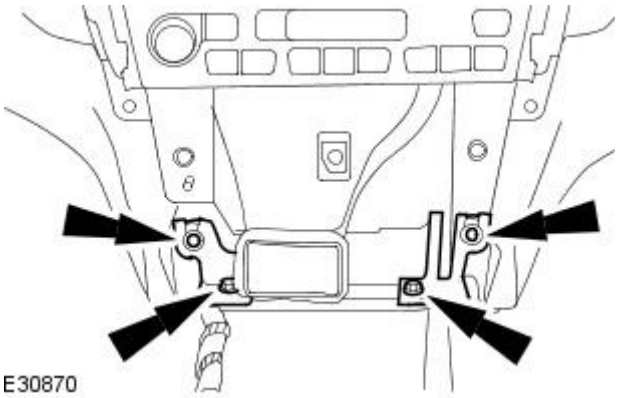


**13.** Remove the instrument panel support brackets.

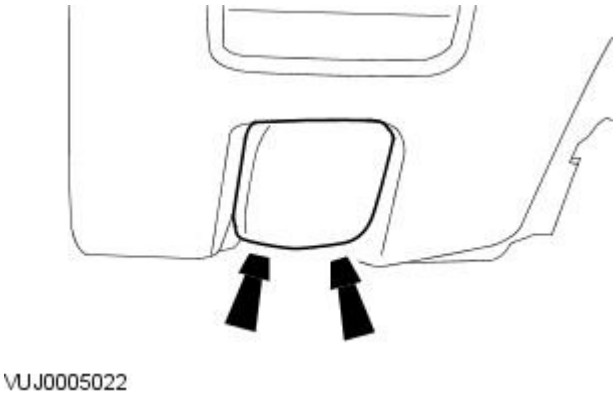


**14.** Detach the hood release handle.

- Remove the hood release handle retaining screws.
- Detach the hood release handle.

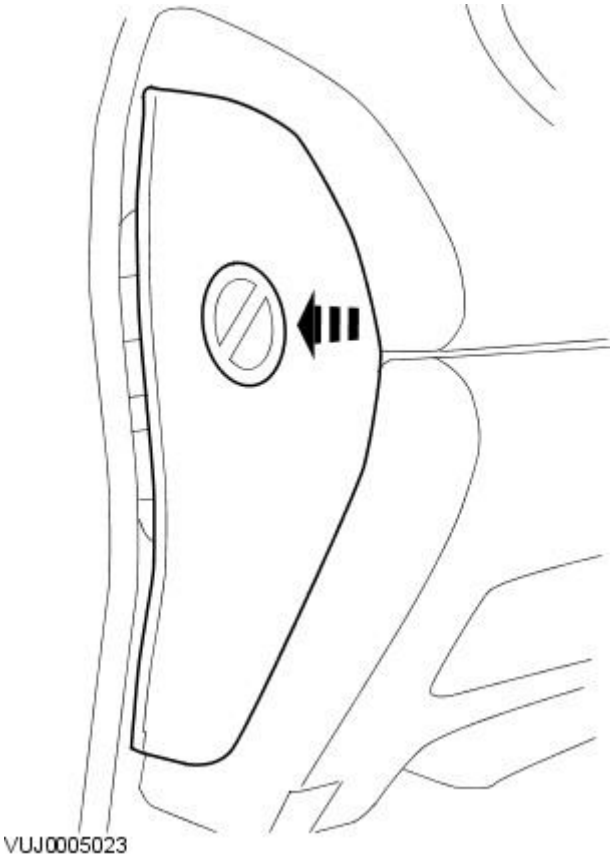


**15.** Remove both A-pillar trim panels
For additional information, refer to Section 501-05 Interior Trim and Ornamentation.

**16.** CAUTION: Make sure damage does not occur to the instrument panel.

• NOTE: Left-hand side shown, right-hand side similar.

Remove the instrument panel end panels.

- Detatch the front door opening weather strips.
- Remove the instrument panel end panels.

GETtheMANUALS.org

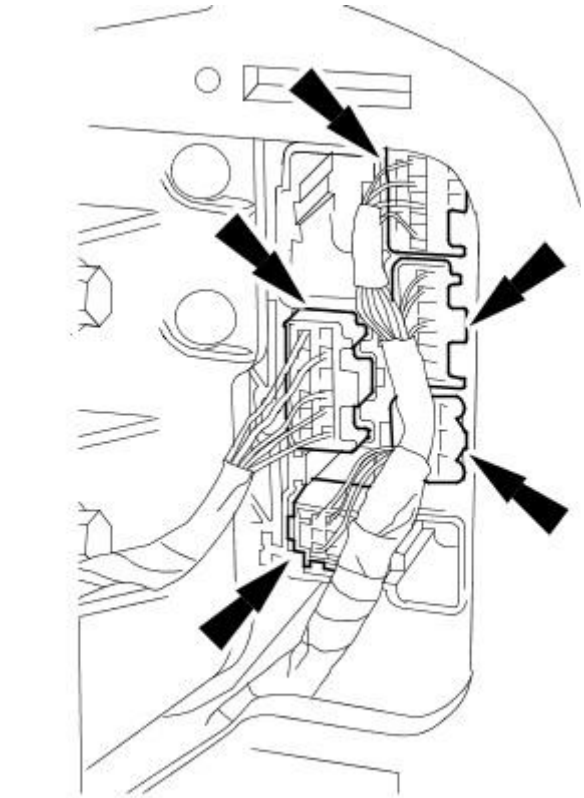

VUJ0005024

**17.** NOTE: Left-hand side shown, right-hand side similar.

Disconnect the electrical connectors.

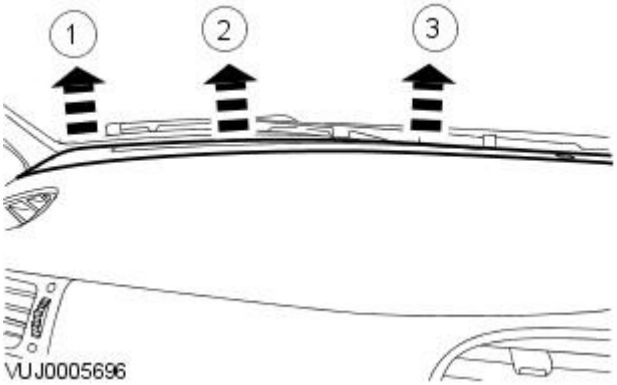


VUJ0005696

**18.** NOTE: Left-hand shown, right-hand similar.

Detach the instrument panel defroster vent trim panel retaining clips in the order shown.

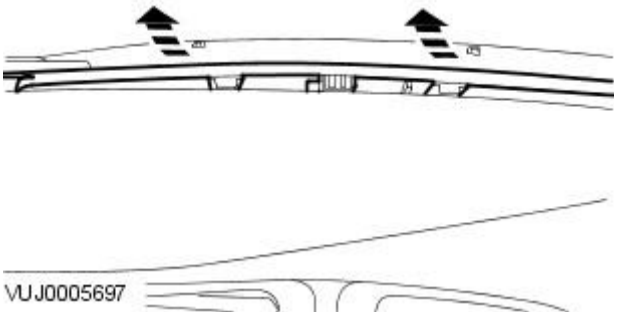

VUJ0005697

**19.** Remove the instrument panel defroster vent trim panel and sunload sensor wiring harness.

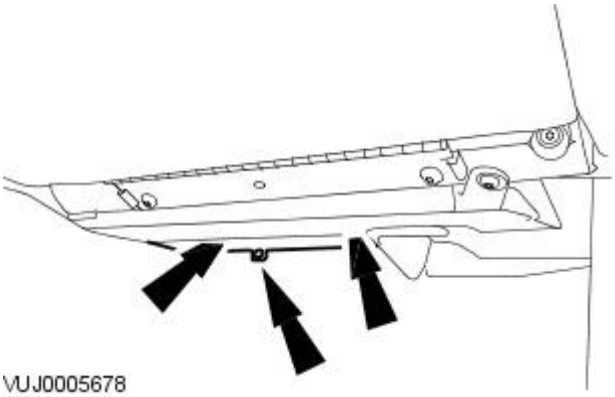

VUJ0005678

**20.** Remove the passenger side instrument panel lower trim panel.

GETtheMANUALS.org

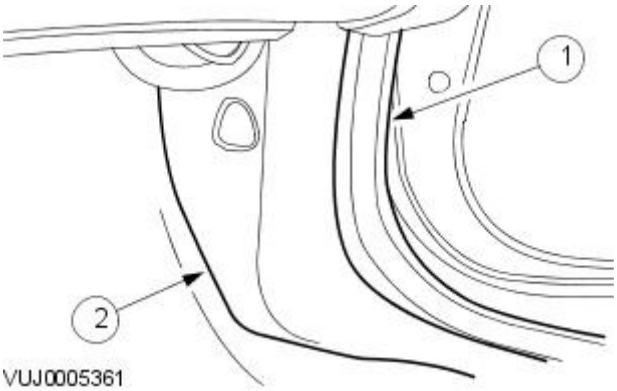


**21.** Remove the passenger side cowl side trim panel.

1. Detach the front door aperture seal
2. Remove the passenger side cowl side trim panel.

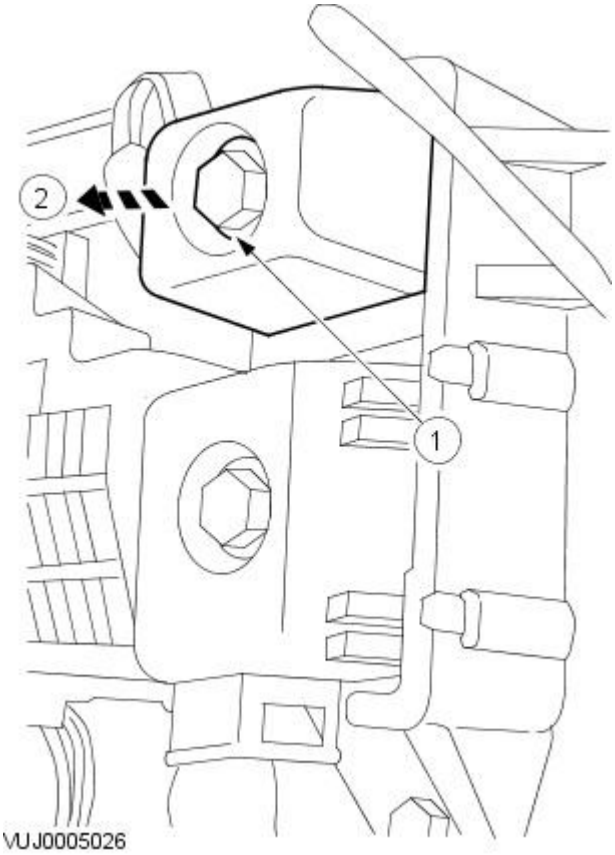


**22.** Disconnect the instrument panel electrical connector.

1. Loosen the instrument panel electrical connector retaining bolt.
2. Disconnect the instrument panel electrical connector.

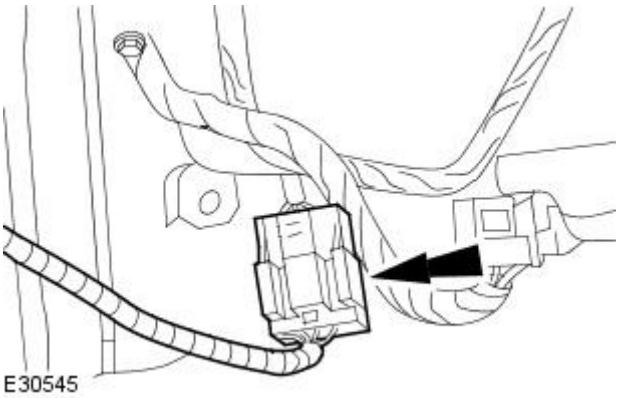


**23.** NOTE: The passenger side instrument panel electrical connector is located on the plenum.

Disconnect the passenger side instrument panel electrical connector.

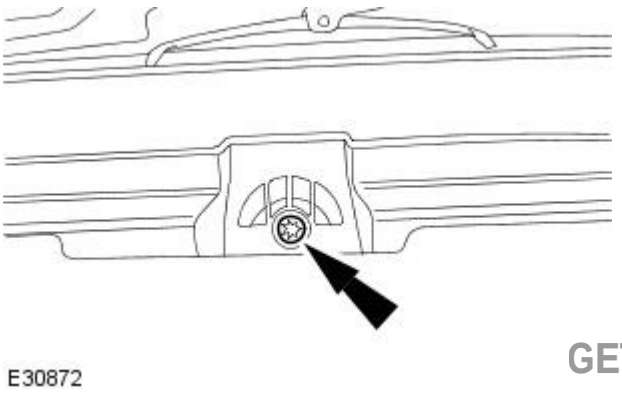


**24.** Remove the instrument panel center retaining screw

GETtheMANUALS.org

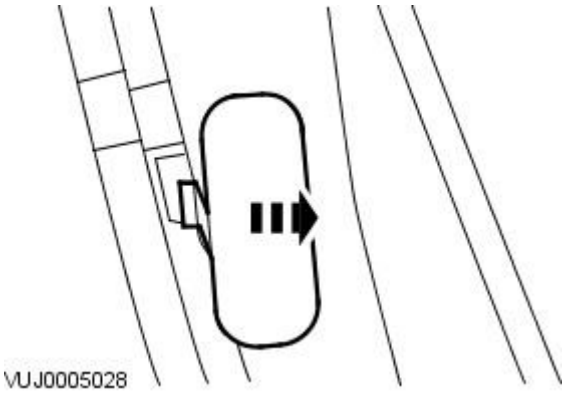


**25.** NOTE: Left-hand shown, right-hand similar.

Remove the instrument panel upper retaining bolt covers.

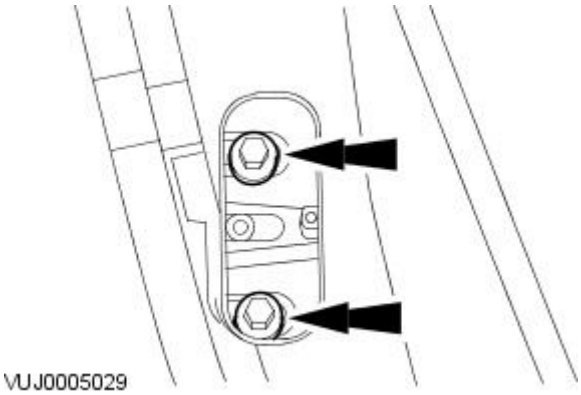


**26.** Remove the instrument panel driver side upper retaining bolts

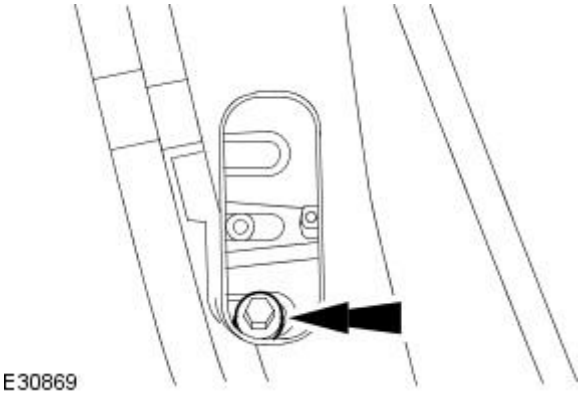


**27.** Remove the instrument panel passenger side upper retaining bolt.

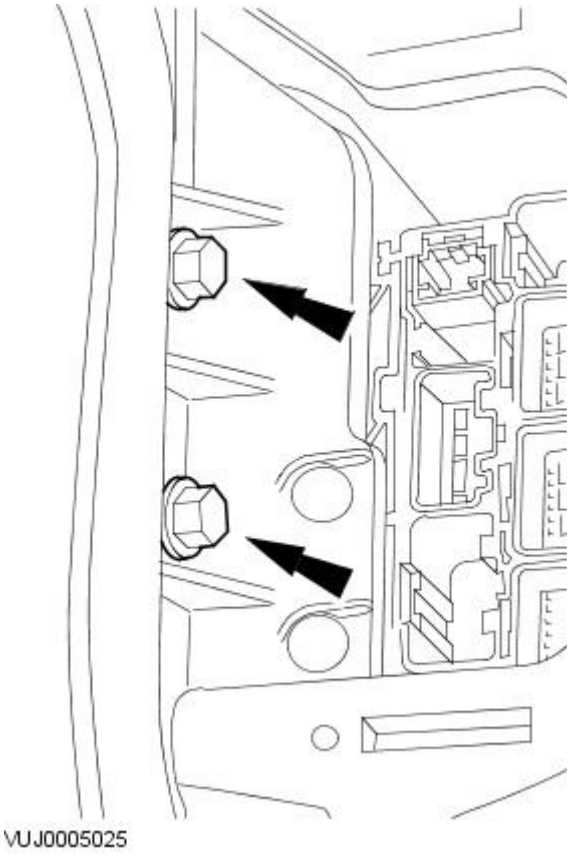


**28.** NOTE: Left-hand shown, right-hand similar.

Remove the instrument panel side retaining bolts.

GETtheMANUALS.org

**29.** CAUTION: Make sure damage does not occur to the instrument panel and interior trim on removal of the instrument panel.

Remove the instrument panel.

## Installation

CAUTION: Make sure damage does not occur to the instrument panel and interior trim on installation of the instrument panel.

**1.** To install, reverse the removal procedure.

**2.** NOTE: Left-hand shown, right-hand similar.

Tighten to 20 Nm.

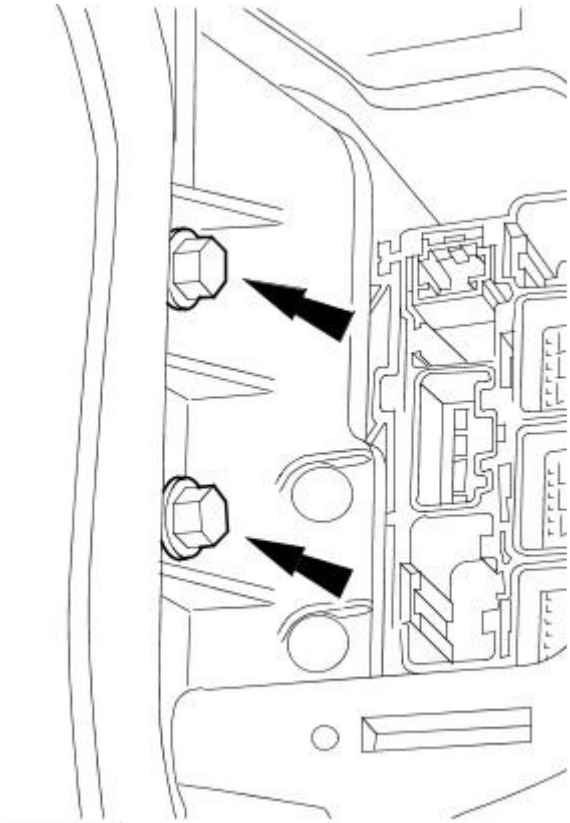

VUJ0005025

**3.** NOTE: Left-hand shown, right-hand similar.

Tighten to 20 Nm.

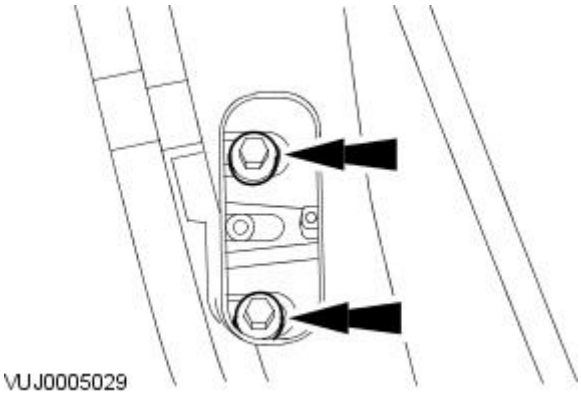

VUJ0005029

**4.** Tighten to 20 Nm.

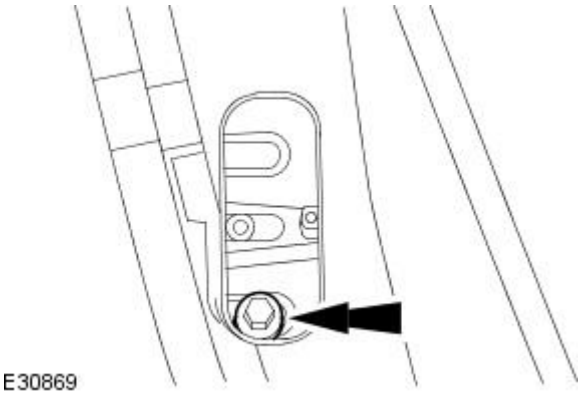

E30869

GETtheMANUALS.org

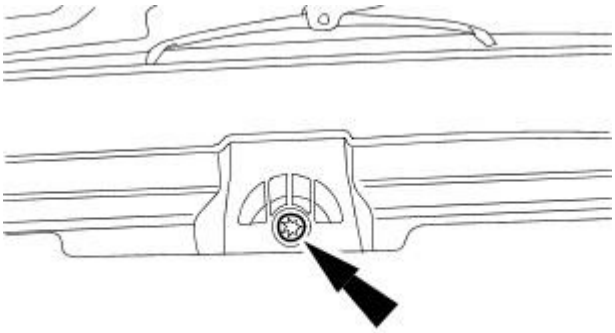

E30872

**5.** Tighten to 2 Nm.

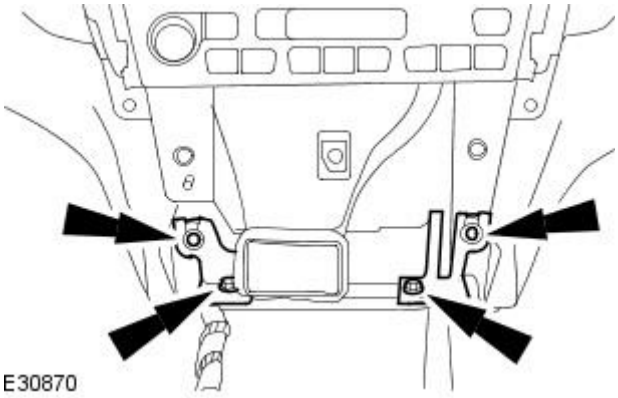

E30870

**6.** Tighten to 5 Nm.

GETtheMANUALS.org

# Instrument Panel and Console - Instrument Panel Console

Removal and Installation

## Removal

All vehicles

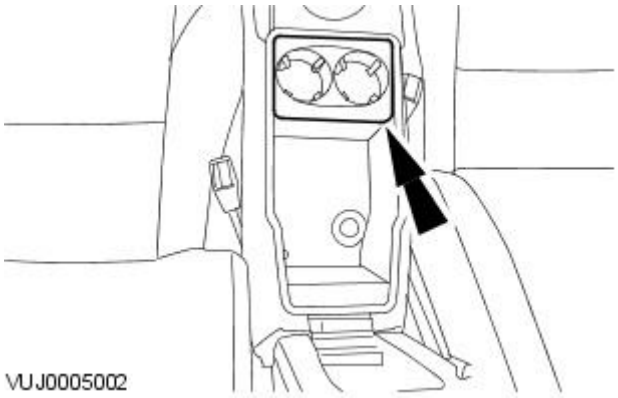


**1.** Remove the floor console cup holder.

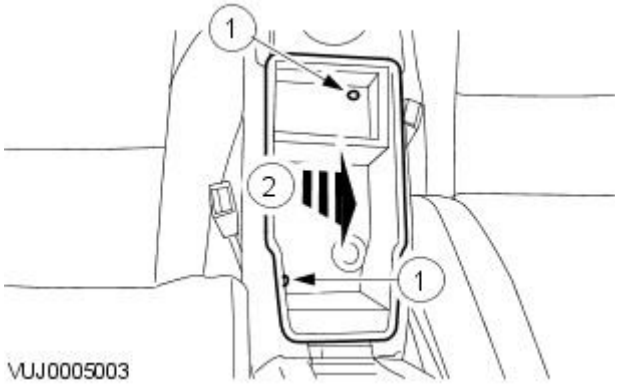


**2.** Remove the floor console stowage compartment.

1. Remove the floor console stowage compartment retaining screws.
2. Remove the floor console stowage compartment.

Vehicles with automatic transmission

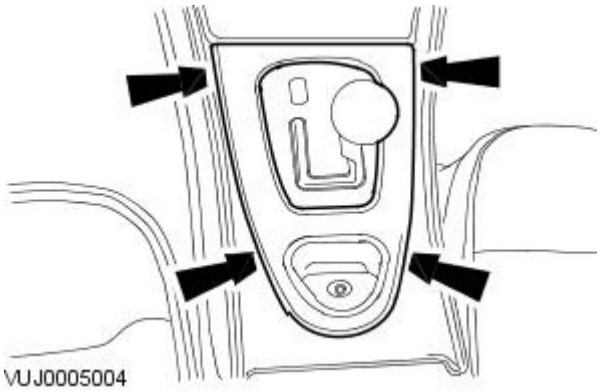


**3.** Remove the gearshift lever selector trim panel.

Vehicles with manual transmission

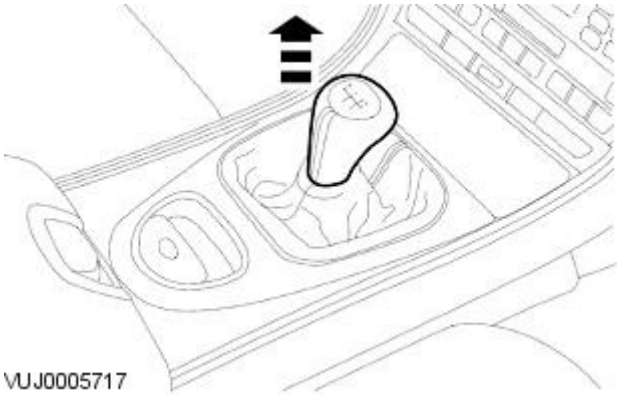


**4.** Remove the gearshift lever handle.

GETtheMANUALS.org

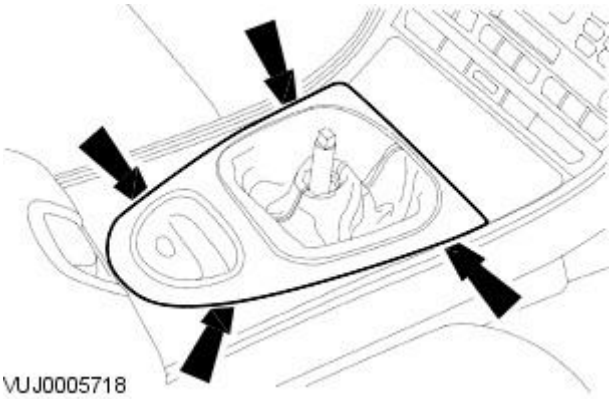


**5.** Remove the gearshift lever selector trim panel.

All vehicles

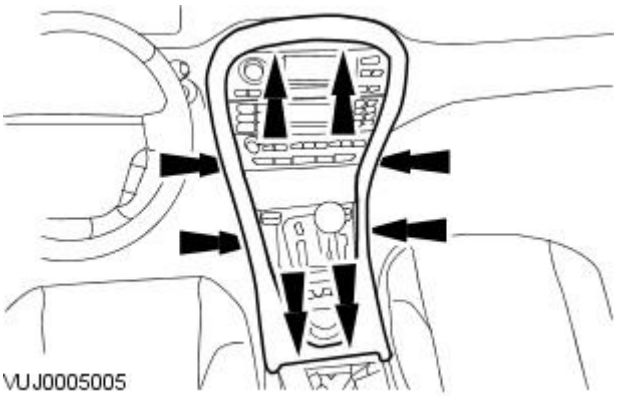


**6.** Remove the instrument panel console bezel

- Release the retaining tangs.

**7.** Detach the instrument panel console.

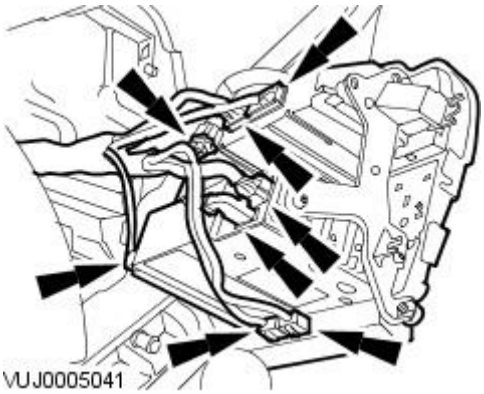


**8.** Remove the instrument panel console.

- Disconnect the electrical connectors.

## Installation

**1.** To install, reverse the removal procedure.

GETtheMANUALS.org

# Instrument Panel and Console - Overhead Console

Removal and Installation

## Removal

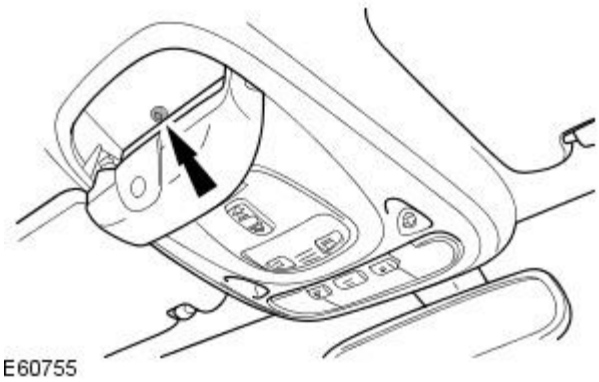


**1.** Detach the overhead console.

- Remove the screw.

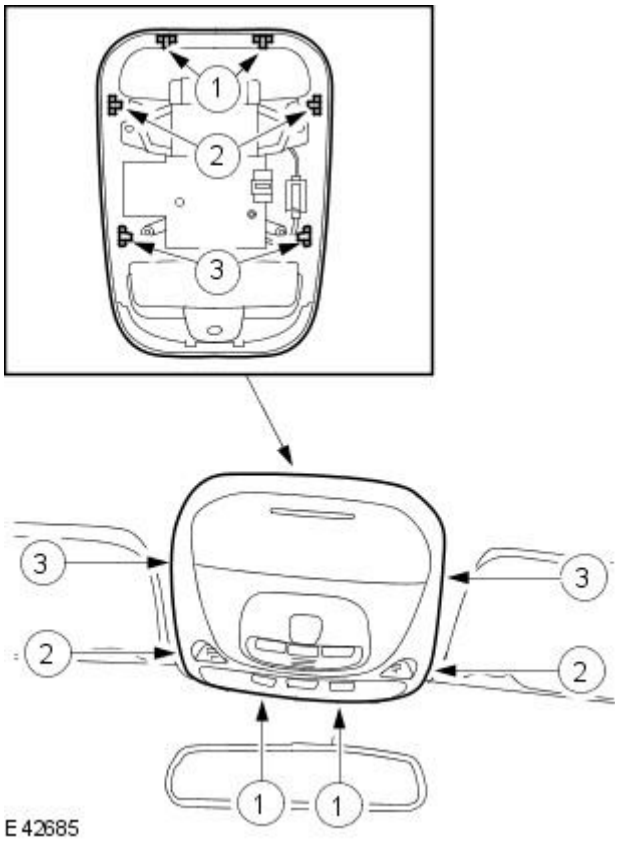


**2.** CAUTION: Make sure the overhead console retaining tangs are released in the order shown. Failure to follow this instruction may result in damage to the component.

Detach the overhead console.

1. Release the overhead console front retaining tangs.
2. Release the overhead console center retaining tangs.
3. Detach the overhead console.

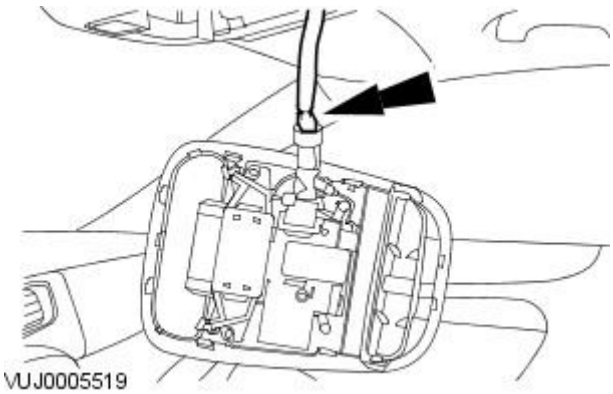


**3.** Remove the overhead console.

- Disconnect the electrical connector.

## Installation

**1.** To install, reverse the removal procedure.

GETtheMANUALS.org

# Instrument Panel and Console - Overhead Console Switch Moulding

Removal and Installation

## Removal

• NOTE: Some variation in the illustrations may occur, but the essential information is always correct.

**1.** Remove the overhead console.
For additional information, refer to: Overhead Console (501-12 Instrument Panel and Console, Removal and Installation).

**2.** NOTE: Where installed.

Remove the front intrusion sensor.

**3.** NOTE: Where installed.

Remove the garage door opener module.

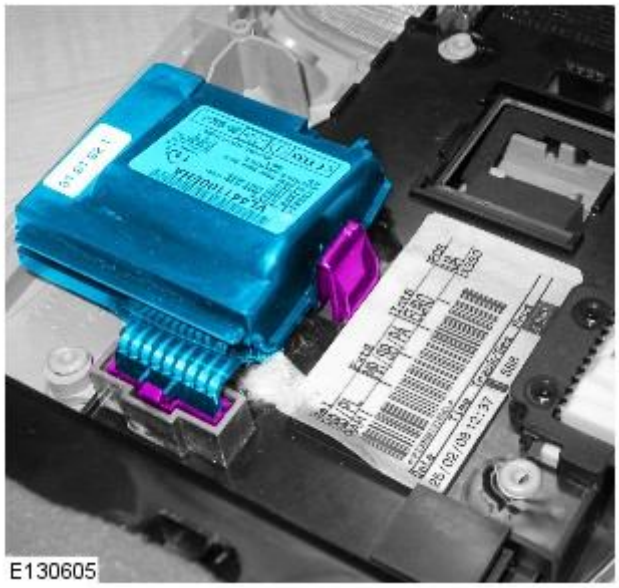


GETtheMANUALS.org

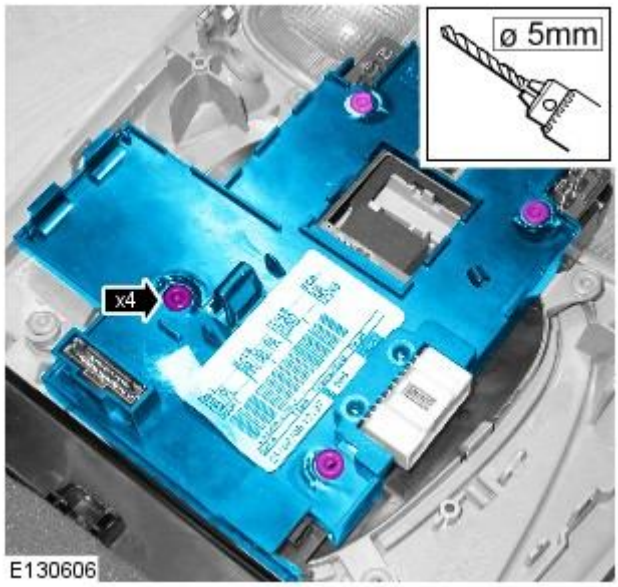


**4.** CAUTION: Make sure that only the head of the fixing is removed. Do not drill any deeper than necessary. Failure to follow this instruction may result in damage to the component.

Remove the printed circuit board (PCB) cover.

- Using a 5mm drill bit, carefully drill out and remove the 4 plastic fixing heads.

**5.** Remove the PCB.

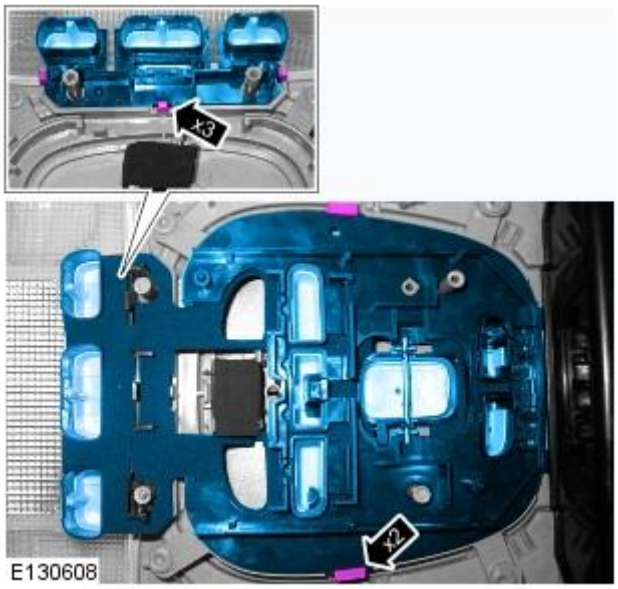


**6.** Remove the two switch mouldings.

GETtheMANUALS.org

7. Remove the foam pad.

8. Carefully remove sunroof rocker switch for reuse in the new rear switch moulding.

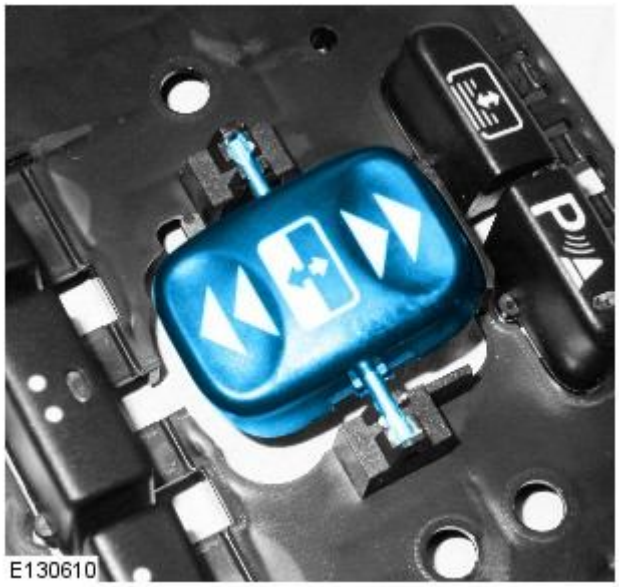


## Installation

1. Select the correct switch moulding for the vehicle from the parts kit.
2. Remove any unnecessary switch buttons from the rear moulding using a suitable sharp knife. Take care not to remove any required switches.
3. Install the sunroof rocker switch.
4. Install the front switch moulding.
5. Install the foam pad.
6. Install the rear switch moulding.
7. Install the PCB.

GETtheMANUALS.org

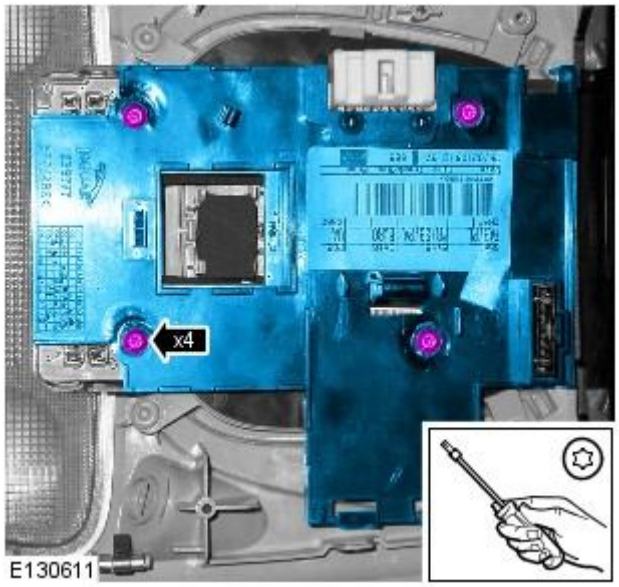


**8.** Install the cover.

- Install the 4 Torx screws
- Tighten to 1.5 Nm.

**9.** Install the garage door opener module.

**10.** Install the front intrusion sensor.

**11.** Install the overhead console.
For additional information, refer to: Overhead Console (501-12 Instrument Panel and Console, Removal and Installation).

GETtheMANUALS.org

# Handles, Locks, Latches and Entry Systems -

**Torque Specifications**

| Description | Nm | lb-ft | lb-in |
|---|---|---|---|
| Front door lock actuator retaining screws | 12 | 9 | — |
| Rear door lock actuator retaining screws | 12 | 9 | — |
| Interior door handle retaining screw | 7 | — | 62 |
| Exterior door handle retaining screws | 7 | — | 62 |
| Luggage compartment lid latch actuator retaining screws | 9 | — | 80 |
| Luggage compartment lid lock cylinder retaining nuts - vehicles built up to 01/2004 | 7 | — | 62 |
| Luggage compartment lid lock cylinder retaining bolt - vehicles built 02/2004 onwards | 7 | — | 62 |
| Rear exterior door handle mounting bracket retaining screw | 4 | — | 35 |

GETtheMANUALS.org

# Handles, Locks, Latches and Entry Systems - Handles, Locks, Latches and Entry Systems

Description and Operation

Vehicles built up to 01/2004

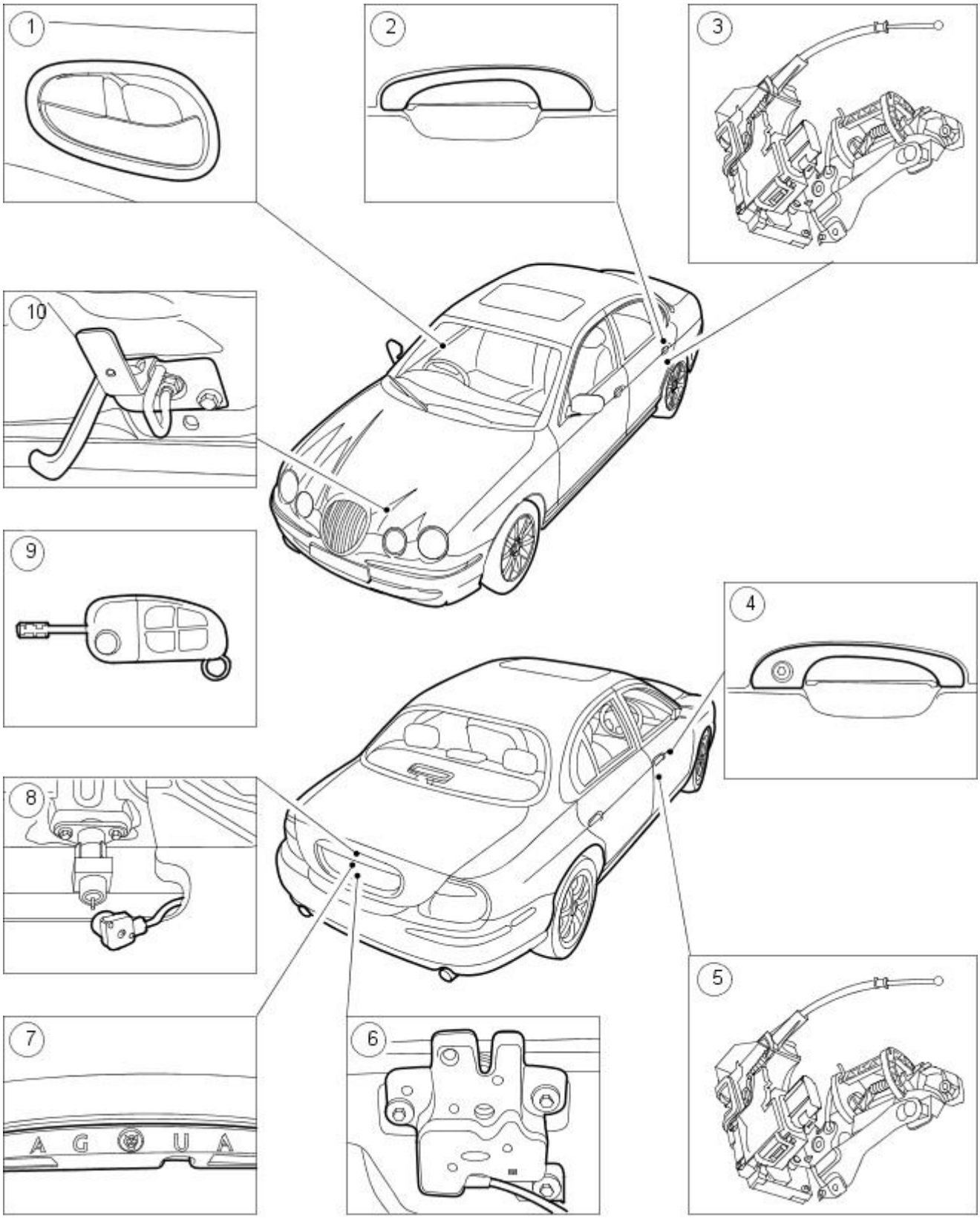


VUJ0005643

| Item | Part Number | Description |
|---|---|---|
| 1 | — | Interior door handle |
| 2 | — | Exterior rear door handle |
| 3 | — | Rear door actuator |
| 4 | — | Exterior front door handle |
| 5 | — | Front door actuator |
| 6 | — | Luggage compartment lid latch actuator |
| 7 | — | Luggage compartment release switch |
| 8 | — | Luggage compartment lock cylinder |
| 9 | — | Integrated key remote entry transmitter |
| 10 | — | Hood latch release handle |

GETtheMANUALS.org

Vehicles built 02/2004 onwards

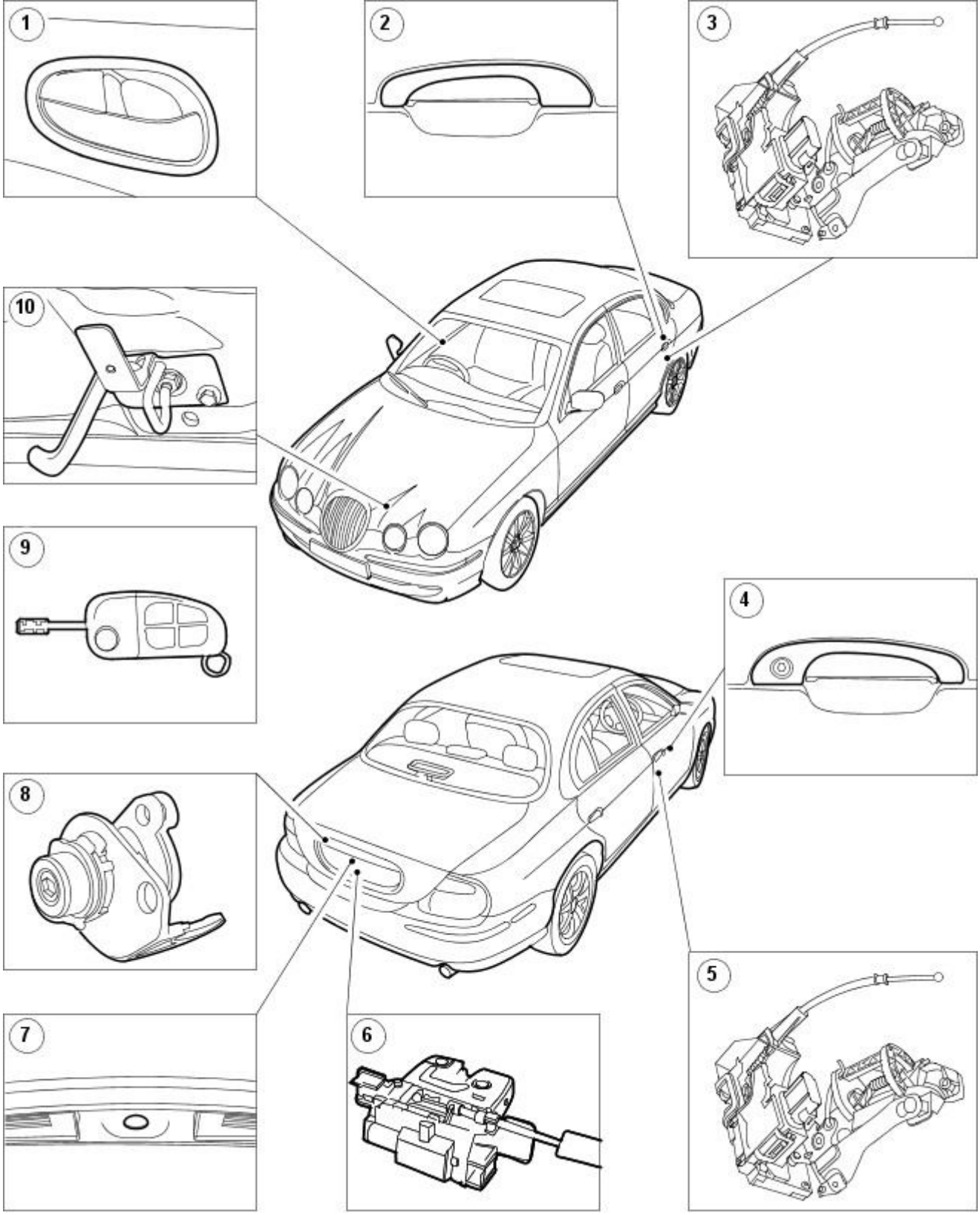


E49454

| Item | Part Number | Description |
|---|---|---|
| 1 | — | Interior door handle |
| 2 | — | Exterior rear door handle |
| 3 | — | Rear door actuator |
| 4 | — | Exterior front door handle |
| 5 | — | Front door actuator |
| 6 | — | Luggage compartment lid latch actuator |
| 7 | — | Luggage compartment release switch |
| 8 | — | Luggage compartment lock cylinder |
| 9 | — | Integrated key remote entry transmitter |
| 10 | — | Hood latch release handle |

For most markets excluding North America and Japan, the remote central locking system incorporates a double locking facility for optimum security. All locks use the Tibbe key system, using six elements and four cuts. The keys include 'in-key' transponders which are programmed to the vehicle engine immobilization system by using the Jaguar approved diagnostic system.

The central locking system employs single key access to the driver door, luggage compartment and ignition switch/steering column lock.

When the vehicle is not locked, each door catch can be externally released by the corresponding exterior door handle which is operated by a single rod. When unlocked, or central locked, the door latches can also be released by the interior handles, each of which are operated by a single cable. Operation of the front door interior handles will also unlock the rear doors. Use of the key in the driver door lock cylinder operates the lock by a short rod to provide locking of the door latch. This in turn locks all other doors and the luggage compartment through

GETMEMANUALS.org

the central locking system. These locking functions can also be achieved by use of the remote transmitter.

For most markets, a 'drive-away door locking' feature automatically locks all doors and the luggage compartment when the vehicle exceeds 7 km/h (4 mile/h).

## Key operation

To central lock or unlock the vehicle, the key is inserted in the driver door lock cylinder, turned clockwise or counter clockwise respectively, and released. Holding the key in the lock position for one and half seconds will close all windows. Releasing the key stops all operations. Central locking of the vehicle locks all the doors, the luggage compartment, and sets the alarm system. In addition to all of the above functions, double locking prevents the doors opening from the interior. To 'double lock' the vehicle, the key is inserted in the driver door lock cylinder and turned to the unlock position, then within three seconds, turned to the lock position and released. The same procedure is required to unlock a 'double locked' vehicle as with a central locked vehicle. The key is inserted in the driver door lock cylinder and turned to the unlock position. This function can also be activated using the remote transmitter.

If an attempt is made to lock the doors through either the driver or passenger door interior handle, when that door is ajar, all doors will lock temporarily. If the lock signal was received at the driver door it will unlock, if the lock signal was received at the passenger door all three passenger doors will unlock.

The fuel filler flap switch is used to allow the driver to release the fuel filler flap from inside the vehicle. This function can be used at all times providing the vehicle is not locked.

## Keyless Entry

The Integrated key remote transmitter operates the following functions:

- unlocking the driver door
- unlocking/locking all doors
- releasing the luggage compartment lid
- activate/deactivate the double locking
- arms/disarms the anti-theft alarm system, interior scanning system and the inclination sensor (if equipped)
- activates global closing
- deactivates a triggered alarm

## Inputs and Outputs

The keyless entry/computer operated lock system receives inputs from the following:

- ignition switch (positions I and II)
- door ajar switches
- hood switch
- luggage compartment switch
- remote transmitter

The Front electronic module (FEM) distributes outputs to the following:

- door lock actuators
- double locking motors
- turn signals
- alarm horn
- luggage compartment latch
- power window motors for global closing

## Transmitter, Keyless Entry Remote

The keyless entry/remote operated lock system is completely independent in function but fully integrated within the FEM. The remote control system consists of a transmitter and an antenna (radio frequency system).

The remote control transmitter for the radio frequency system will operate without the transmitter being directed at the vehicle. The normal range between the transmitter and the antenna will be up to 10 meters for the USA, Canada and the rest of the world. The normal range between transmitter and antenna will be up to five meters for the UK and Europe and three meters for Japan.

Before the remote control system can be used, each transmitter must be initialized to the vehicle. A maximum number of four transmitters can be initialized to any vehicle. All remote transmitters must be initialized at the same time.

The keyless entry/remote operated locks will not operate when the ignition key is in the ignition switch.

## Locking and Unlocking

The remote transmitter is integrated into the key and contains four buttons (lock, unlock, trunk release, headlamp convenience). To operate the system:

Press the lock button once to activate the central locking system and the alarm system.

Press the lock button twice within three seconds to activate the central locking system, double locking system, alarm system and the interior scanning system (if equipped).

Press the unlock button once to deactivate the double locking, the alarm system is deactivated and only the driver door is fully unlocked (this is programmable using the approved Jaguar diagnostic system).

Press the unlock button twice within three seconds, will unlock the remaining doors (this is programmable using the Jaguar approved diagnostic system).

Press the luggage compartment release button once releases the luggage compartment lid. The vehicle must be unlocked and at vehicle speeds below 7 km/h (4 mile/h).

Press the headlamp convenience button once to activate the headlamp main beam function, press the headlamp convenience button again to deactivate the headlamp main beam function. This function will automatically deactivate after 30 seconds.

Press the headlamp convenience button three times with in three seconds to activate the alarm, press the headlamp convenience button again three times within three seconds to deactivate the alarm.

GETtheMANUALS.org

## Double Locking

Double locking prevents the interior door handles from unlocking the doors.

Double locking is activated by turning the key, using the driver door lock cylinder to the unlock position and then to the lock position within three seconds or by pressing the lock button twice within three seconds on the remote transmitter.

Successful double locking is indicated by the turn signals flashing twice, one short flash followed by a long flash.

Double locking will be inhibited if the FEM senses the hood, a door or the luggage compartment is ajar or open. The FEM receives its input from the door ajar switches.

If the vehicle battery becomes discharged after the double locking has been activated, opening the drivers door with the key will mechanically deactivate the double locking on the drivers door only.

GETtheMANUALS.org

# Handles, Locks, Latches and Entry Systems - Locks, Latches and Entry Systems

Diagnosis and Testing

## Inspection and Verification

1. **1.** Verify the customer concern.
2. **2.** Visually inspect for obvious signs of mechanical or electrical damage.

**Visual Inspection Chart**

| Mechanical | Electrical |
|---|---|
| • Misaligned door(s), hood or luggage compartment lid<br>• Door latch(es)<br>• Actuating rod(s)<br>• Exterior door handle(s)<br>• Interior door handle(s)<br>• Door lock cylinder<br>• Cable(s)<br>• Luggage compartment lid exterior release switch | • Fuse(s)<br>• Wiring harness<br>• Electrical connector(s)<br>• Door lock actuator(s)<br>• Remote transmitter batteries<br>• Vehicle battery<br>• Remote transmitter<br>• Door lock switch(es)<br>• Front electronic module (FEM) |

3. **3.** If an obvious cause for an observed or reported concern is found, correct the cause (if possible) before proceeding to the next step.
4. **4.** If the cause is not visually evident, verify the symptom and refer to the Jaguar Approved Diagnostic System.

GETtheMANUALS.org

# Handles, Locks, Latches and Entry Systems - Remote Transmitter Programming

General Procedures

**1.** NOTE: All remote transmitters are programmable and must be set at the same time.

• NOTE: If an attempt is made to program a fifth remote entry device after four remote entry devices have already been programmed, the attempt shall erase all remote entry device associations and start a new set of four remote entry device associations.

• NOTE: To program (or reprogram) the remote transmitters into the remote keyless entry driver door module (DDM) carry out the following step:

The complexity of the electronics involved with the remote keyless entry, of which the DDM is a part, and the multiplexed communication network which are connected to it preclude the use of workshop general electrical test equipment. Therefore, reference should be made to the Jaguar approved diagnostic system for detailed instructions on programming the remote transmitters.

GETtheMANUALS.org

# Handles, Locks, Latches and Entry Systems - Exterior Front Door Handle

Removal and Installation

## Removal

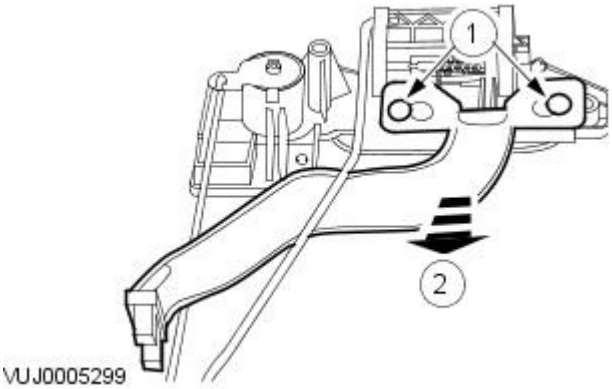


1. Remove the front door actuator.
   For additional information, refer to Front Door Lock Actuator in this section.
2. Remove the exterior front door handle mounting bracket.
   1. Release the tangs.
   2. Remove the exterior front door handle mounting bracket.

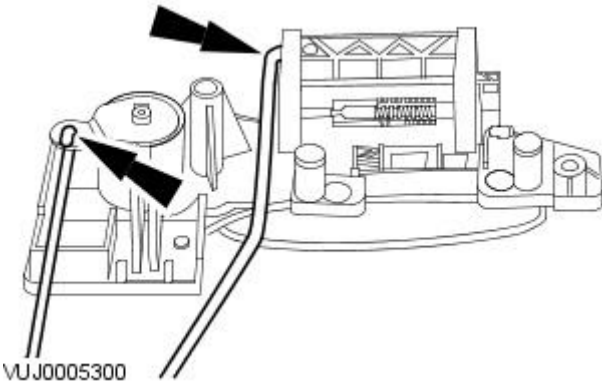


3. Remove the exterior front door handle.
   - Detach the connecting rods.

## Installation

1. To install, reverse the removal procedure.

GETtheMANUALS.org

# Handles, Locks, Latches and Entry Systems - Exterior Rear Door Handle

Removal and Installation

## Removal

1. Remove the rear quarter window glass.
   For additional information, refer to Section 501-11 Glass, Frames and Mechanisms.
2. Raise the rear door window glass.
3. Detach the interior door handle.

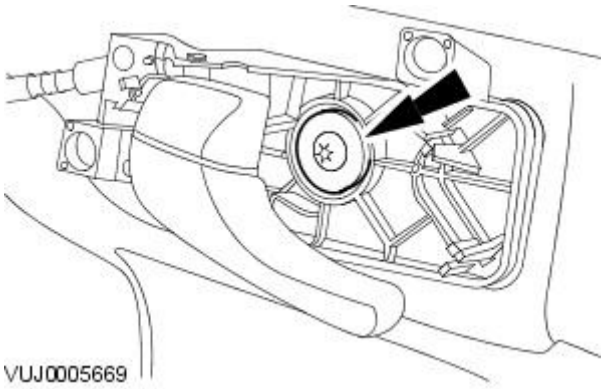


4. Release the actuator remote cable from the interior door handle.

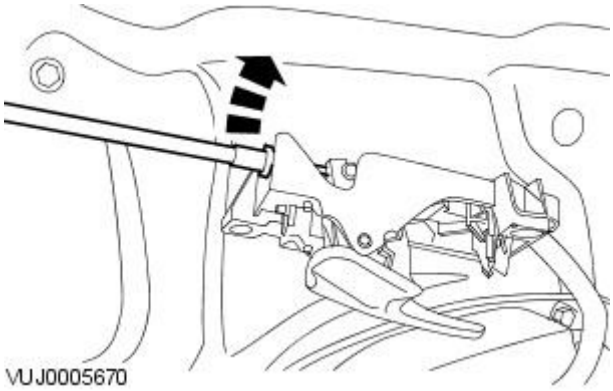


5. Remove the interior door handle.

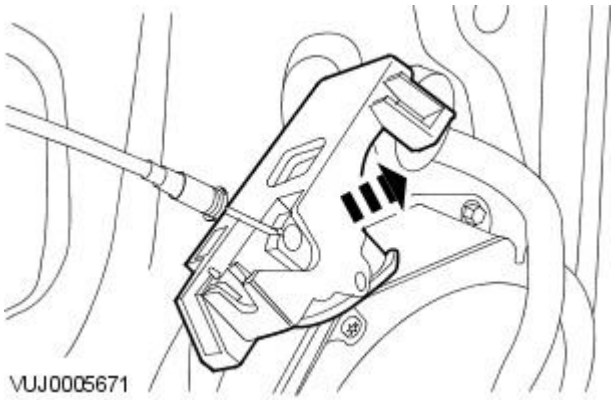


6. Remove the exterior door handle bezel retaining screw.

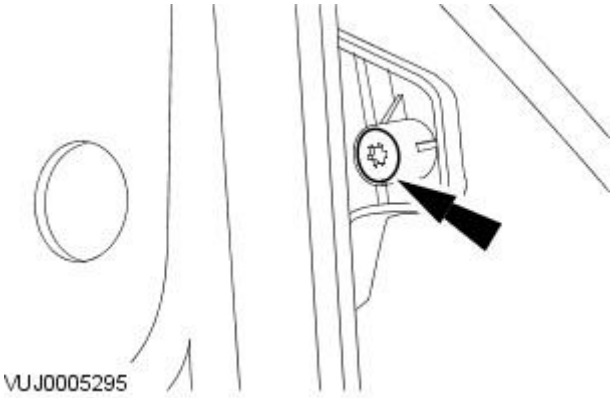


GETtheMANUALS.org

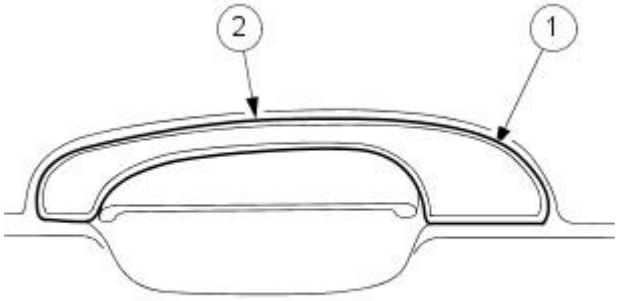


VUJ0004945

**7.** Remove the exterior door handle bezel.

1. Release the retaining clip.
2. Remove the exterior door handle bezel.

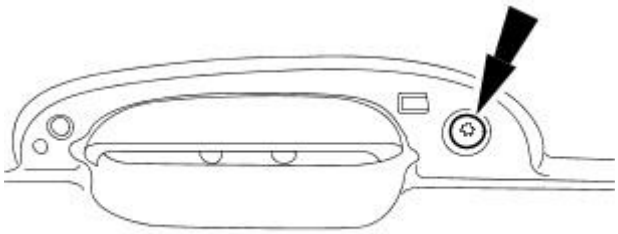

VUJ0005296

**8.** CAUTION: Apply suitable protective tape to the exterior door handle to prevent damage.

Remove the exterior door handle retaining screw.

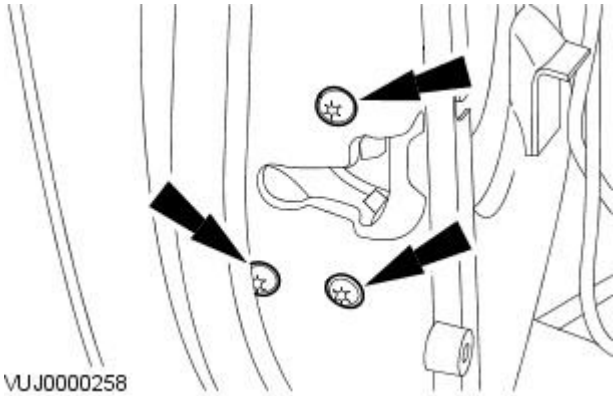

VUJ0000258

**9.** Remove the door actuator retaining screws.

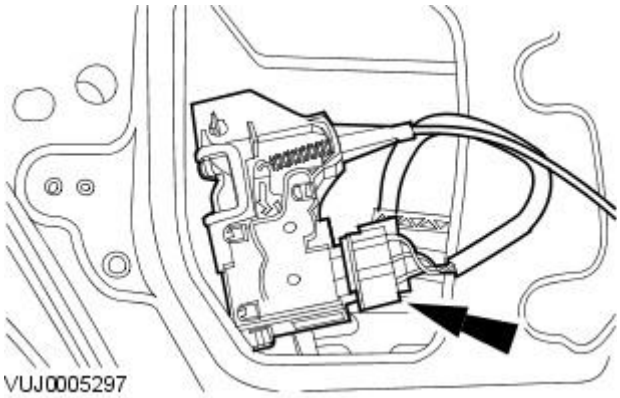

VUJ0005297

**10.** Reposition the rear door actuator and exterior door handle.

**11.** Remove the rear door actuator and exterior door handle.

- Disconnect the rear door actuator electrical connector.

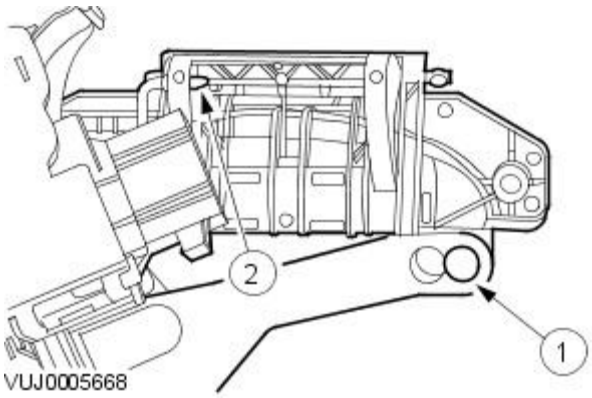


VUJ0005668

**12.** Remove the exterior door handle.

1. Detach the exterior door handle.
2. Remove the exterior door handle.

GETtheMANUALS.org

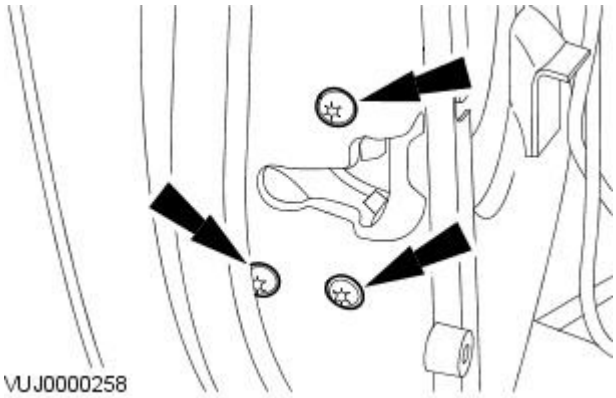


**1.** To install, reverse the removal procedure.

- Tighten to 12 Nm.

GETtheMANUALS.org

# Handles, Locks, Latches and Entry Systems - Front Door Lock Actuator

Removal and Installation

## Removal

1. Remove the door window glass.
   For additional information, refer to Section 501-11 Glass, Frames and Mechanisms.
2. Detach the interior door handle.

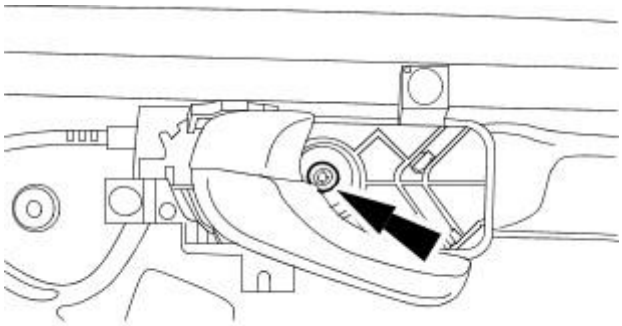


3. Detach the actuator remote cable from the interior door handle.

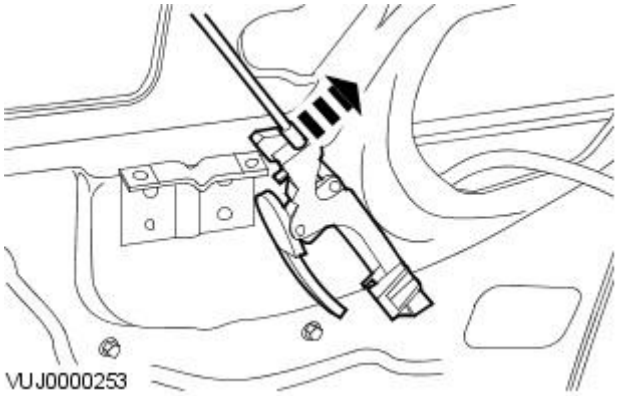


4. Remove the interior door handle.

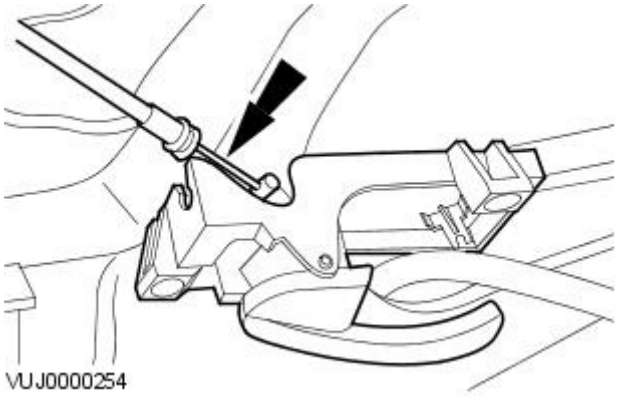


5. Detach the door window glass run.

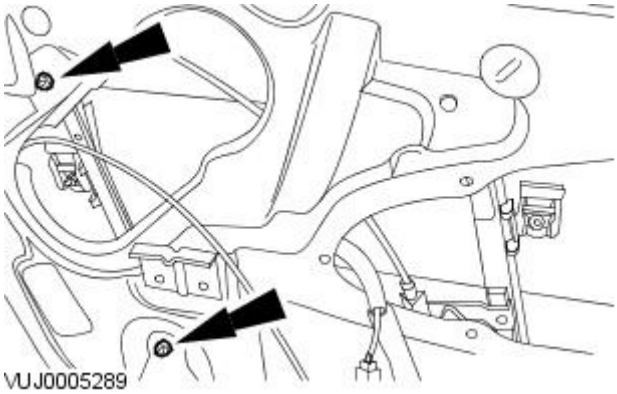


GETtheMANUALS.org

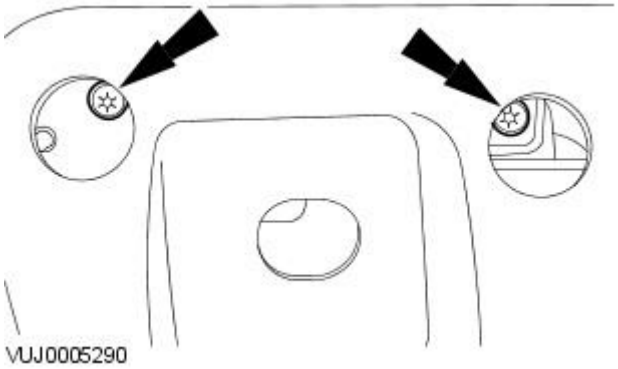


**6.** Remove the exterior door handle retaining screws.

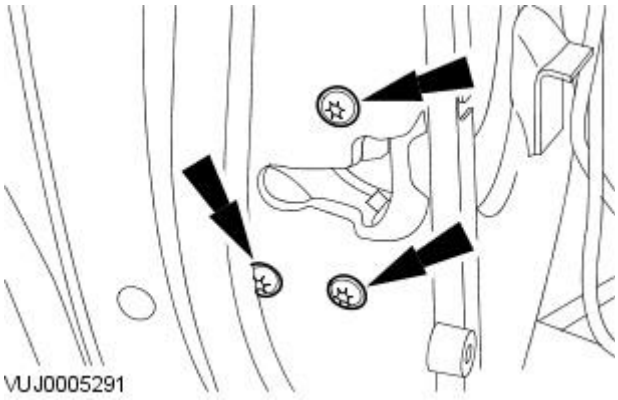


**7.** Remove the front door actuator retaining screws.

**8.** CAUTION: Apply suitable protective tape to the exterior door handle to prevent damage.

Reposition the front door actuator and exterior handle.

**9.** Remove the front door actuator and exterior handle.

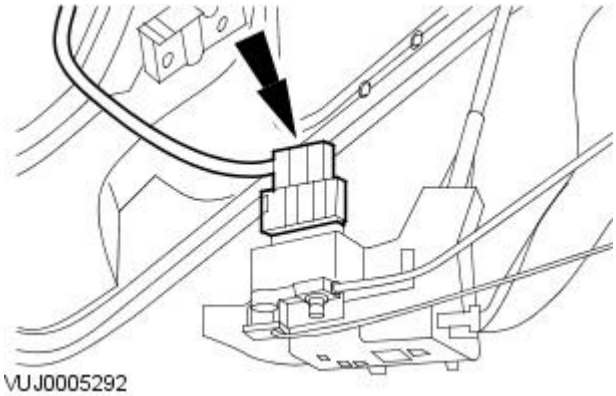


**10.** Disconnect the front door actuator remote cable.

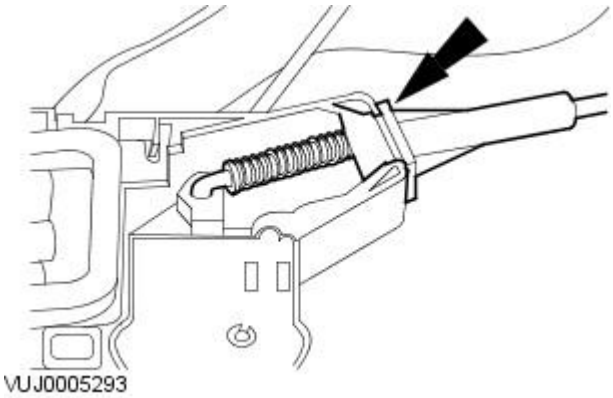


GETtheMANUALS.org

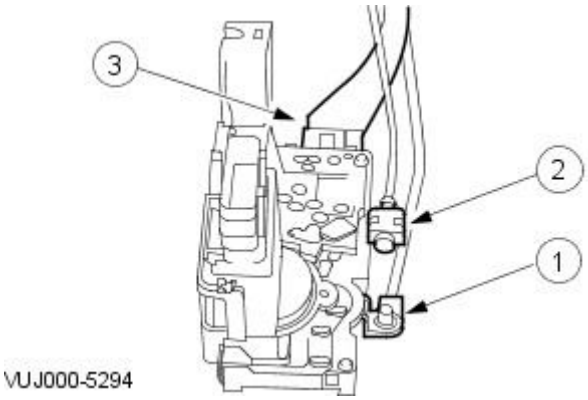


**11.** Remove the front door actuator.

1. Detach the door lock cylinder connecting rod.
2. Detach the exterior door handle connecting rod.
3. Remove the front door actuator.

## Installation

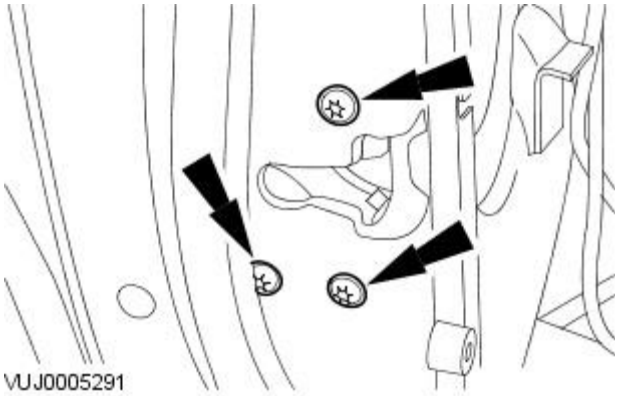


**1.** To install, reverse the removal procedure.

- Tighten to 12 Nm.

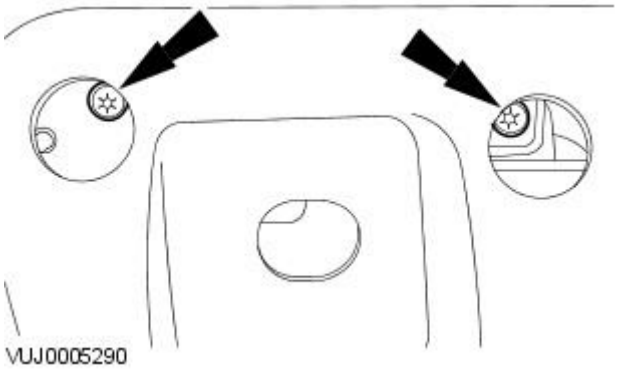


**2.** Tighten to 7 Nm.

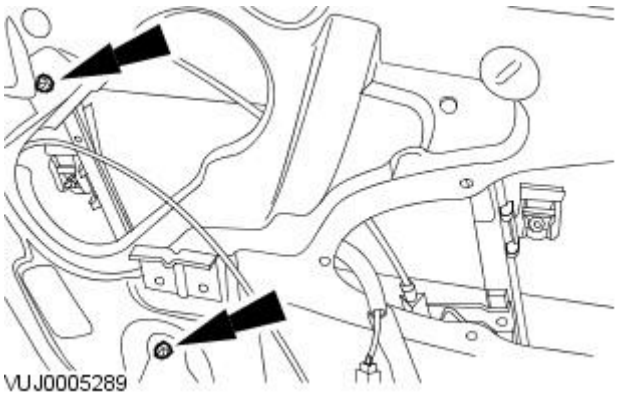


**3.** Tighten to 6 Nm.

GETtheMANUALS.org

# Handles, Locks, Latches and Entry Systems - Front Door Lock Cylinder

Removal and Installation

## Removal

1. Remove the front door lock actuator.
   For additional information, refer to Front Door Lock Actuator in this section.
2. Remove the front door lock cylinder connecting rod.

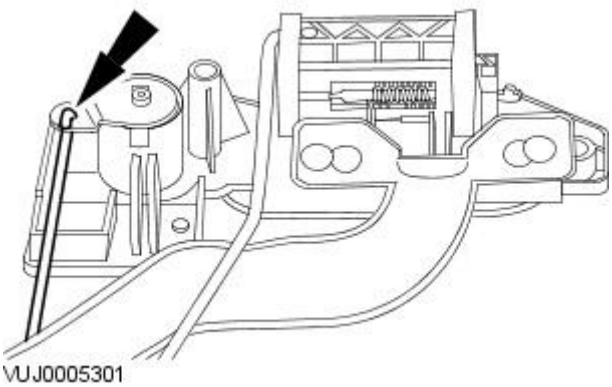


3. Remove the front door lock cylinder operating lever.

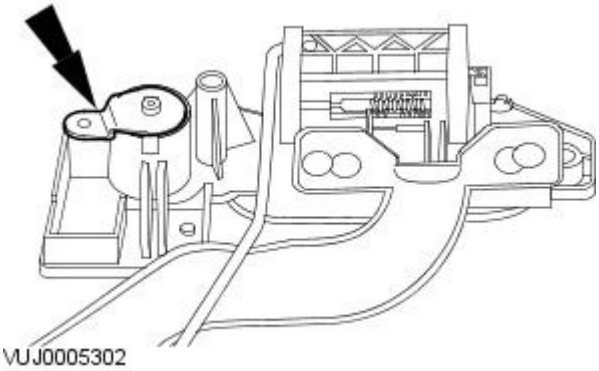


4. Remove the front door lock cylinder.
   1. Release the tang.
   2. Remove the front door lock cylinder.

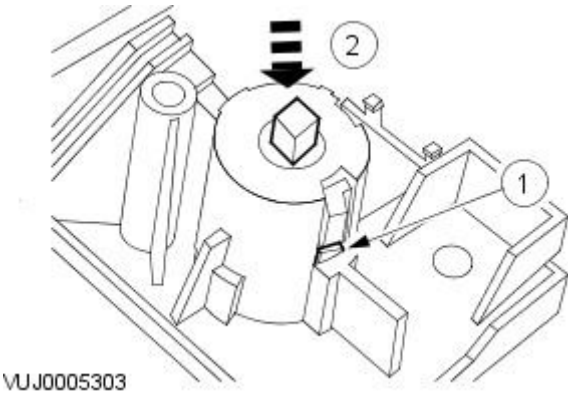


## Installation

1. To install, reverse the removal procedure.

GETtheMANUALS.org

# Handles, Locks, Latches and Entry Systems - Interior Door Handle

Removal and Installation

## Removal

1. Remove the interior front door trim panel.
   For additional information, refer to Section 501-05 Interior Trim and Ornamentation.
2. Detach the interior door handle.

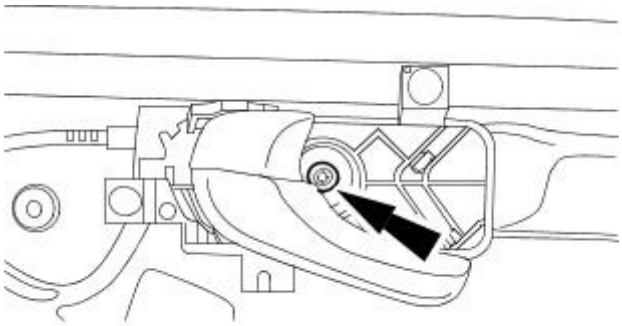

VUJ0005288

3. release the actuator remote cable from the interior door handle.

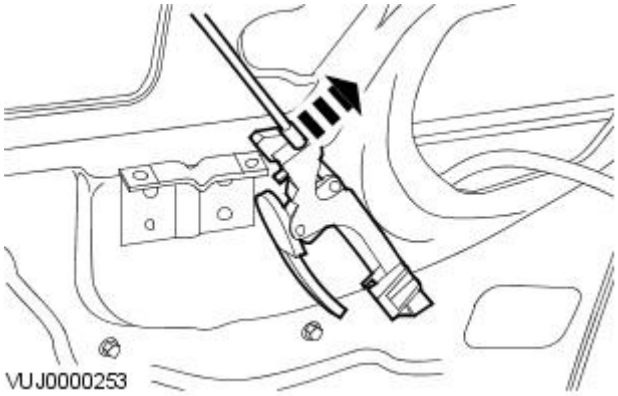

VUJ0000253

4. Remove the interior door handle.

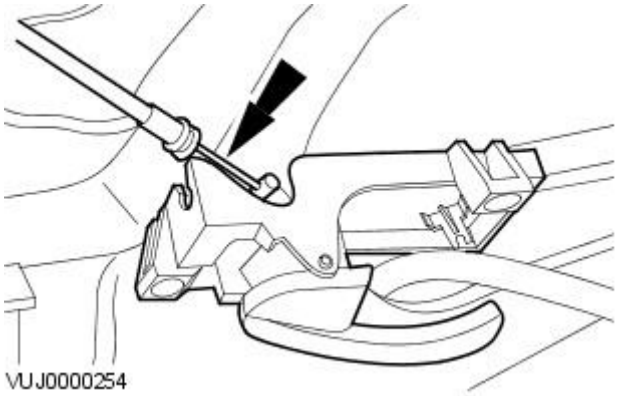

VUJ0000254

## Installation

1. To install, reverse the removal procedure.
   - Tighten to 7 Nm.

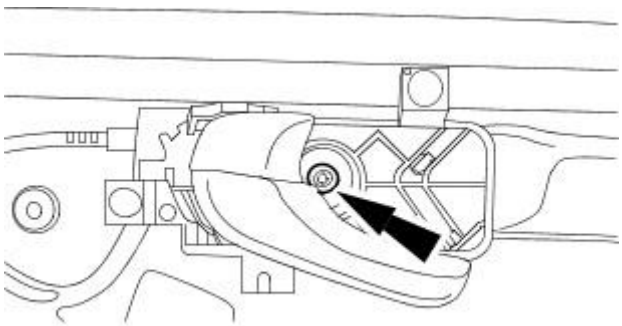

VUJ0005288

GETtheMANUALS.org

# Handles, Locks, Latches and Entry Systems - Luggage Compartment Lid Latch ActuatorVehicles Built From: 02/2004

Removal and Installation

## Removal

- NOTE: Federal market vehicles, refer to steps 1,2,3,4,5,6,7,9,10,12 and 13.
- NOTE: Non federal market vehicles, refer to steps 2,3,4,5,7,8 and 11.

**1.** NOTE: Federal market vehicles only.

Detach the luggage compartment emergency release handle.

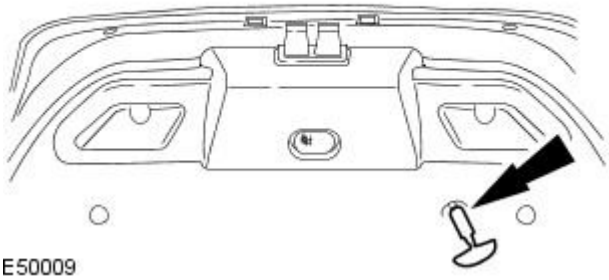

E50009

**2.** NOTE: All vehicles.

Remove the luggage compartment lid latch actuator trim panel.

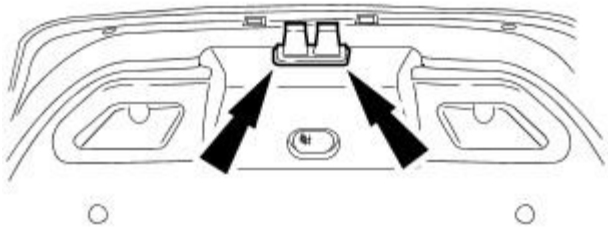

E49428

**3.** NOTE: All vehicles.

Remove the luggage compartment lid latch trim panel retaining bolt covers.

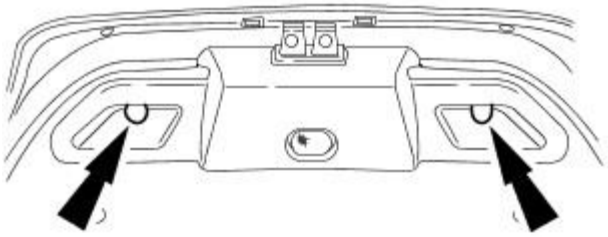

E49429

**4.** NOTE: All vehicles.

Detach the luggage compartment lid latch trim panel.

E49430

GETtheMANUALS.org

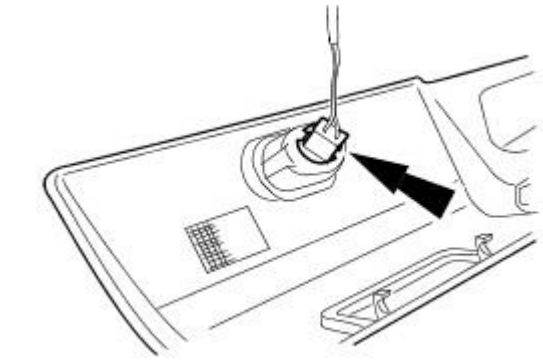

E49431

**5.** NOTE: All vehicles.

Remove the luggage compartment lid latch trim panel.

- Disconnect the electrical connector.

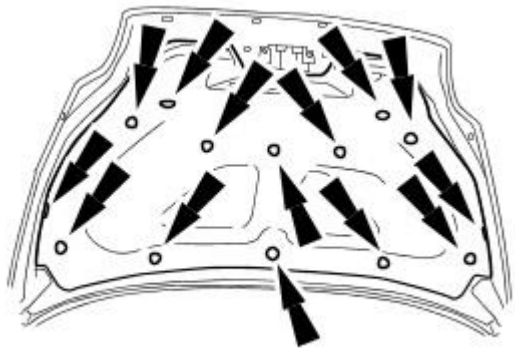

E49435

**6.** NOTE: Federal market vehicles only.

Remove the luggage compartment lid liner.

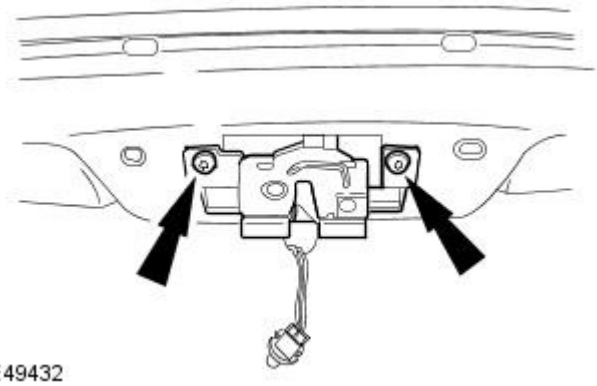

E49432

**7.** NOTE: All vehicles.

Detach the luggage compartment lid latch actuator.

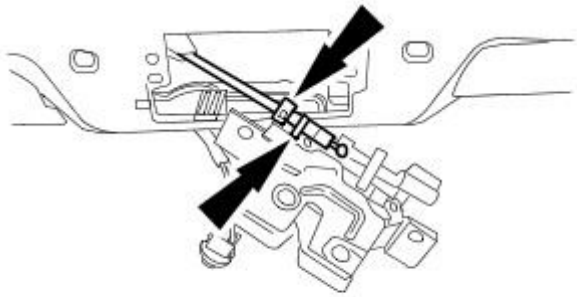

E49433

**8.** NOTE: Non federal market vehicles only.

Detach the luggage compartment lid latch actuator release cable.

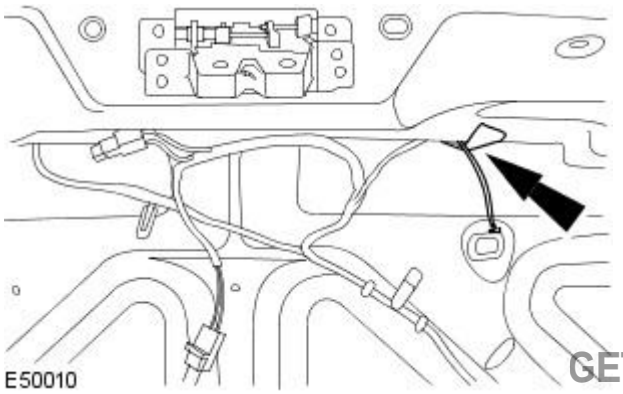

E50010

**9.** NOTE: Federal market vehicles only.

Detach the luggage compartment emergency release cable from tape.

GETtheMANUALS.org

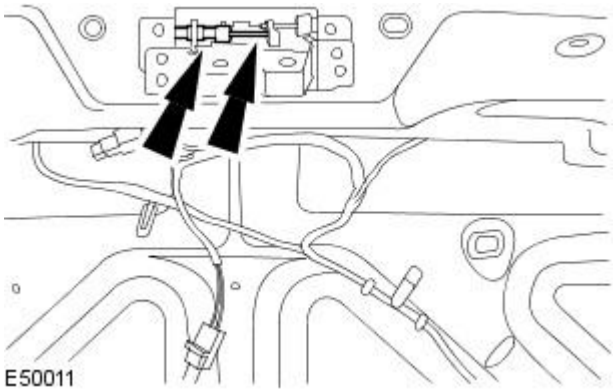


**10.** NOTE: Federal market vehicles only.

Detach the luggage compartment lid latch actuator release cable.

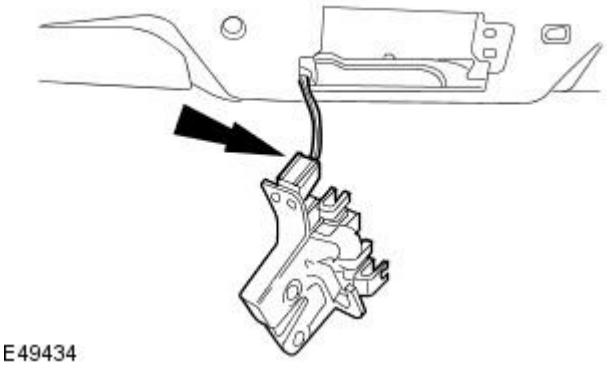


**11.** NOTE: Non federal market vehicles only.

Remove the luggage compartment lid latch actuator.

- Disconnect the electrical connector.

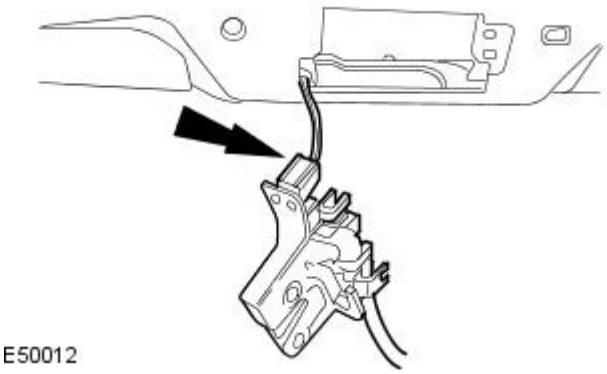


**12.** NOTE: Federal market vehicles only.

Remove the luggage compartment lid latch actuator.

- Disconnect the electrical connector.

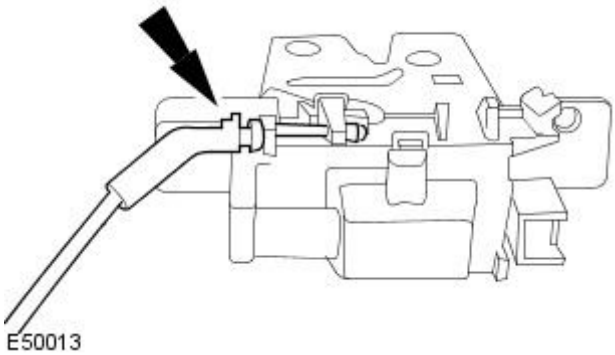


**13.** NOTE: Federal market vehicles only.

Detach the luggage compartment lid latch actuator release cable.

## Installation

GETtheMANUALS.org

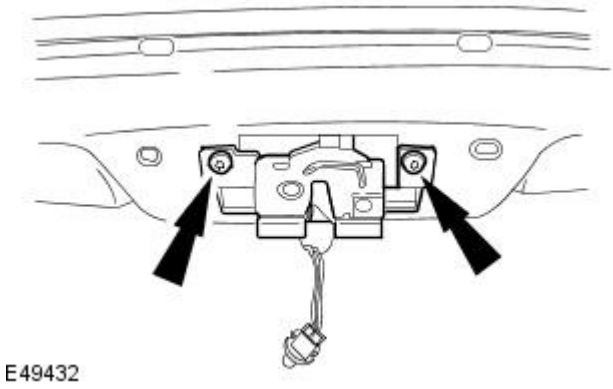


1. To install, reverse the removal procedure.
   - Tighten to 9 Nm.

GETtheMANUALS.org

# Handles, Locks, Latches and Entry Systems - Luggage Compartment Lid Latch ActuatorVehicles Built Up To: 01/2004

Removal and Installation

## Removal

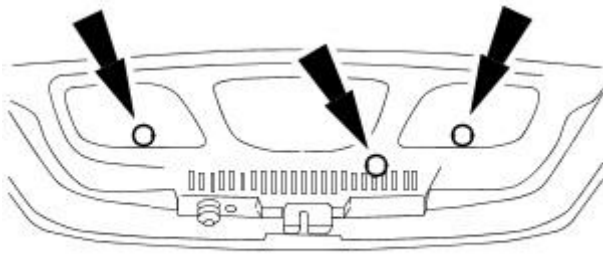

VUJ0005218

1. Remove the luggage compartment lid latch trim panel retaining screw covers.

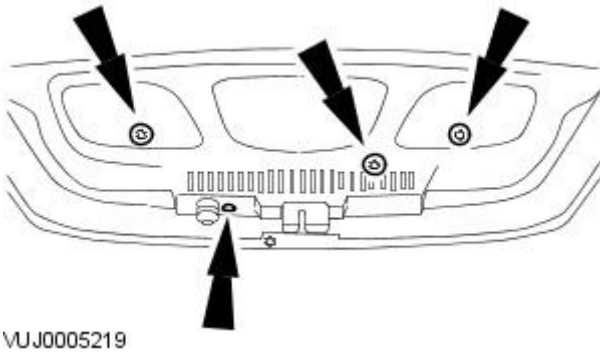

VUJ0005219

2. Detach the luggage compartment lid latch trim panel.

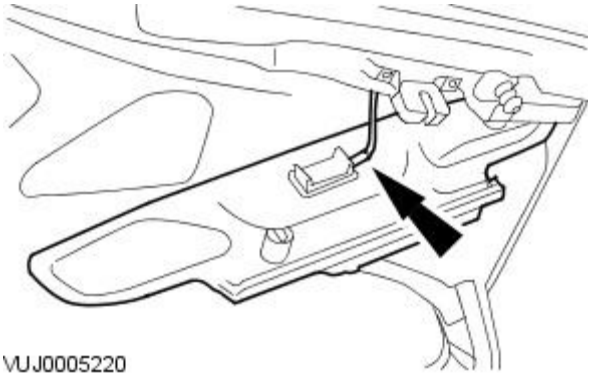

VUJ0005220

3. Remove the luggage compartment lid latch trim cover.
   - Disconnect the luggage compartment lamp electrical connector.

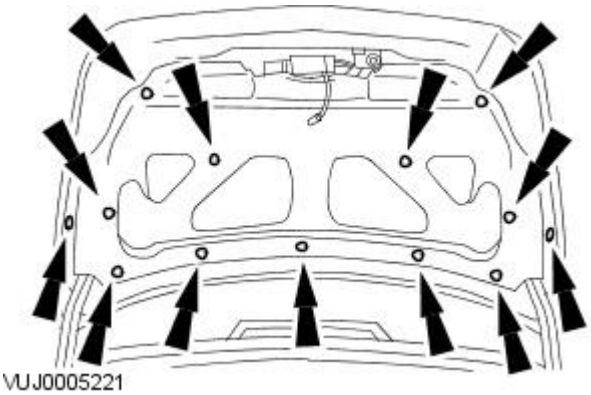

VUJ0005221

4. Remove the luggage compartment lid liner.

GETtheMANUALS.org

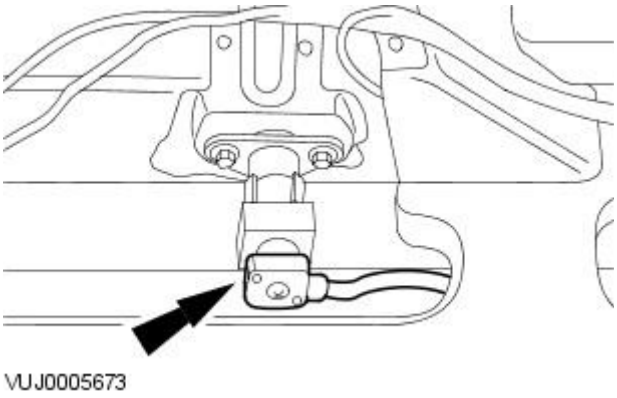


**5.** Disconnect the luggage compartment lid latch actuator release cable.

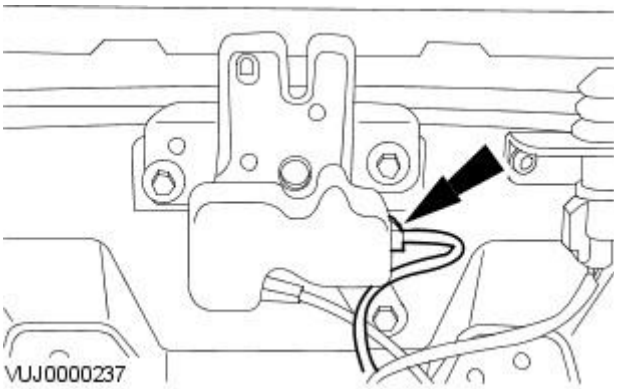


**6.** Disconnect the electrical connector.

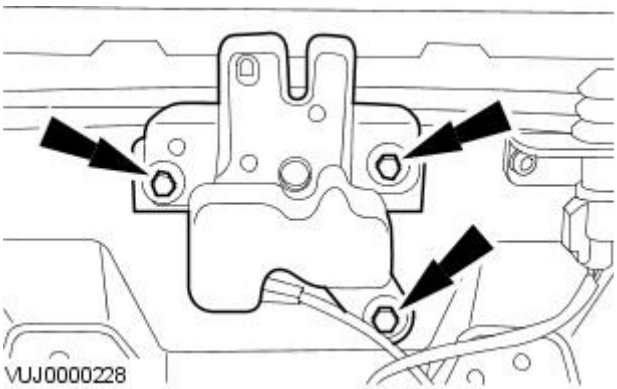


**7.** Remove the luggage compartment lid latch actuator.

## Installation

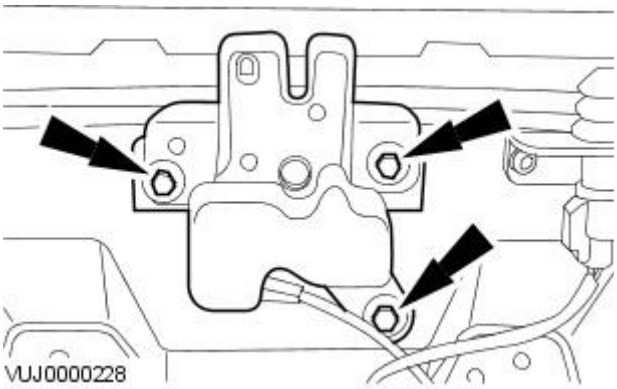


**1.** To install, reverse the removal procedure.

- Tighten to 9 Nm.

GETtheMANUALS.org

# Handles, Locks, Latches and Entry Systems - Luggage Compartment Lid Lock CylinderVehicles Built From: 02/2004

Removal and Installation

## Removal

**1.** Remove the luggage compartment lid latch actuator trim panel.

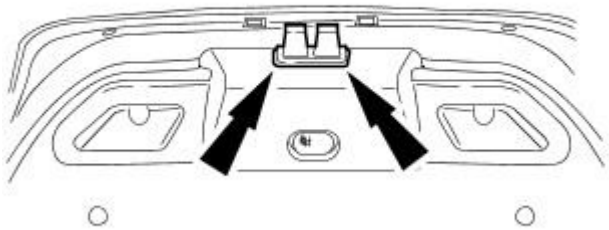

E49428

**2.** Remove the luggage compartment lid latch trim panel retaining bolt covers.

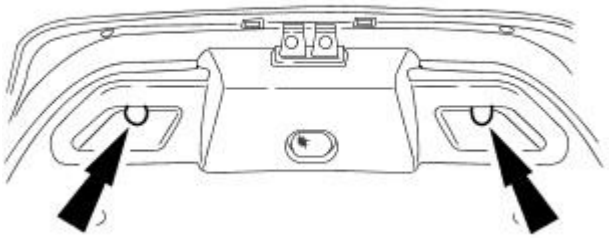

E49429

**3.** Detach the luggage compartment lid latch trim panel.

E49430

**4.** Remove the luggage compartment lid latch trim panel.

- Disconnect the electrical connector.

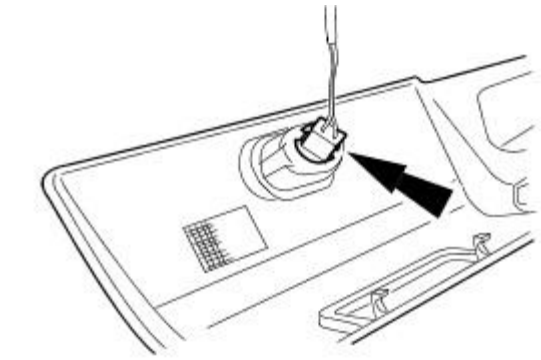

E49431

GETtheMANUALS.org

**5.** Remove the luggage compartment lid liner.

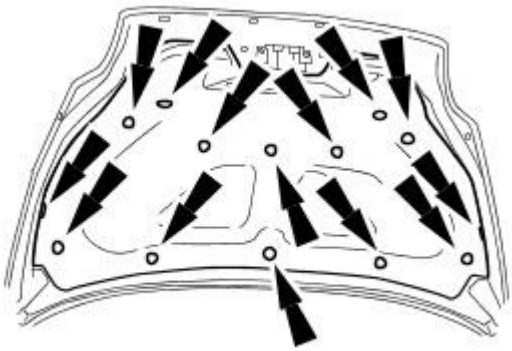

E49435

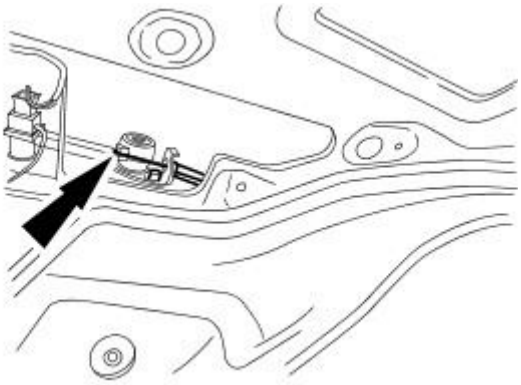

E49437

**6.** CAUTION: Make sure that the luggage compartment lid lock cylinder release cable is not damaged. Failure to follow these instructions may result in damage to the vehicle.

Detach the luggage compartment lid lock cylinder release cable.

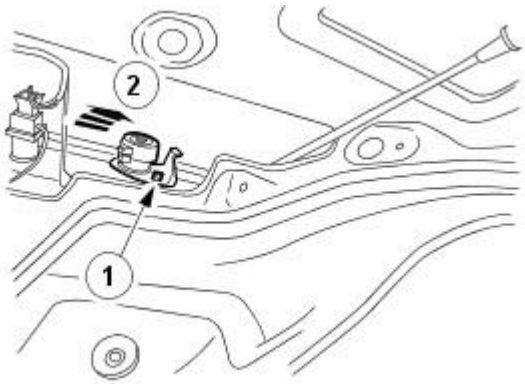


E49972

**7.** Remove the luggage compartment lid lock cylinder.

1. Remove the luggage compartment lid lock cylinder retaining bolt.
2. Remove the luggage compartment lid lock cylinder.
    1. Rotate the luggage compartment lid lock cylinder clockwise.

## Installation

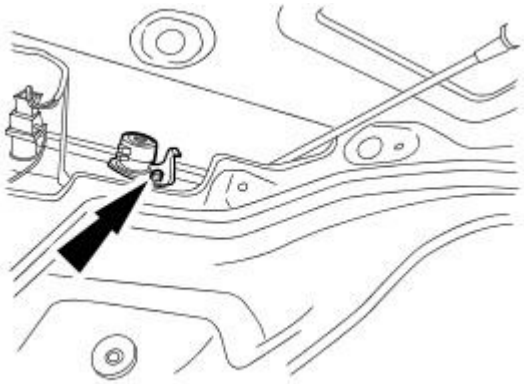

E49436

**1.** To install, reverse the removal procedure.

- Tighten to 7 Nm.

GETtheMANUALS.org

# Handles, Locks, Latches and Entry Systems - Luggage Compartment Lid Lock CylinderVehicles Built Up To: 01/2004

Removal and Installation

## Removal

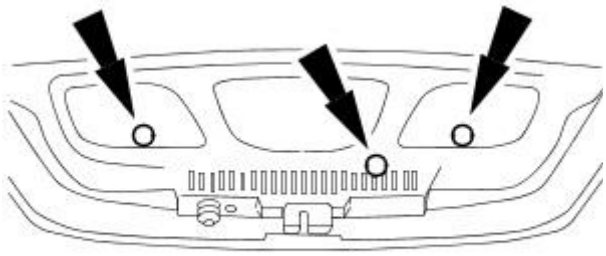

VUJ0005218

1. Remove the luggage compartment lid latch trim panel retaining screw covers.

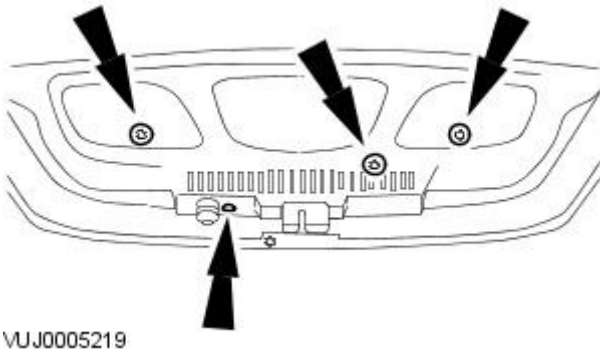

VUJ0005219

2. Detach the luggage compartment lid latch trim panel.

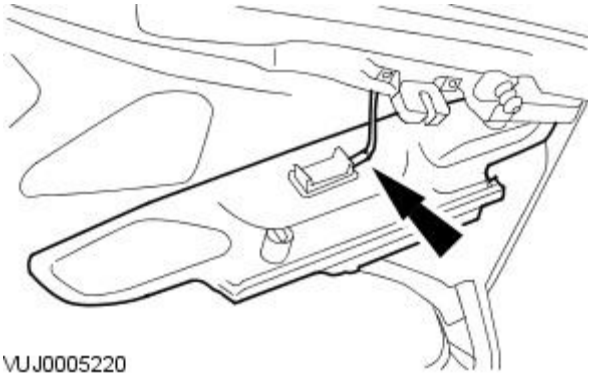

VUJ0005220

3. Remove the luggage compartment lid latch trim cover.
   - Disconnect the luggage compartment lamp electrical connector.

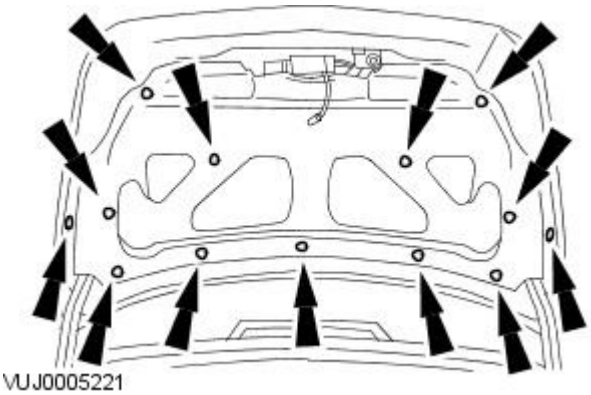

VUJ0005221

4. Remove the luggage compartment lid liner.

GETtheMANUALS.org

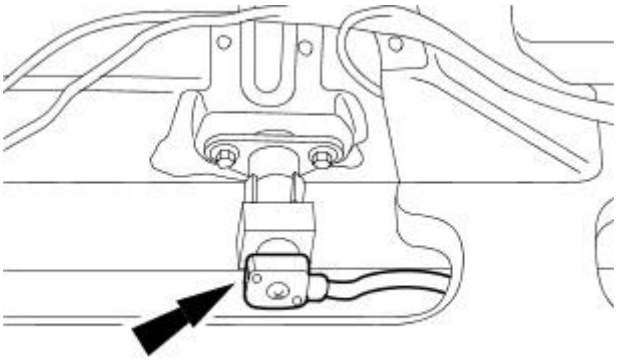

VUJ0005673

**5.** Disconnect the luggage compartment lid latch actuator release cable.

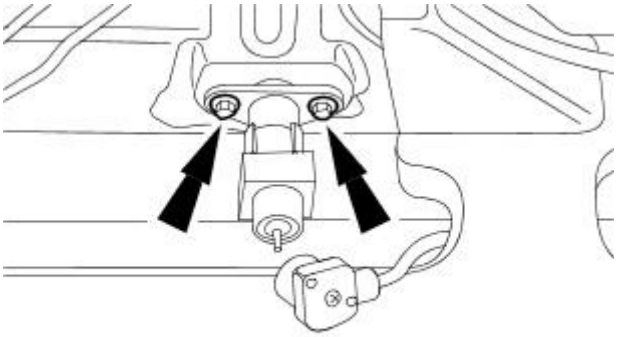

VUJ0005672

**6.** Remove the luggage compartment lid lock cylinder.

## Installation

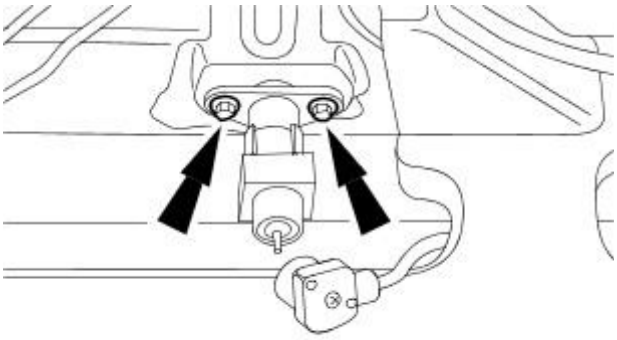

VUJ0005672

**1.** To install, reverse the removal procedure.

- Tighten to 7 Nm.

GETtheMANUALS.org

# Handles, Locks, Latches and Entry Systems - Rear Door Lock Actuator

Removal and Installation

## Removal

1. Remove the rear quarter window glass.
   For additional information, refer to Section 501-11 Glass, Frames and Mechanisms.
2. Raise the rear door window glass.
3. Detach the interior door handle.

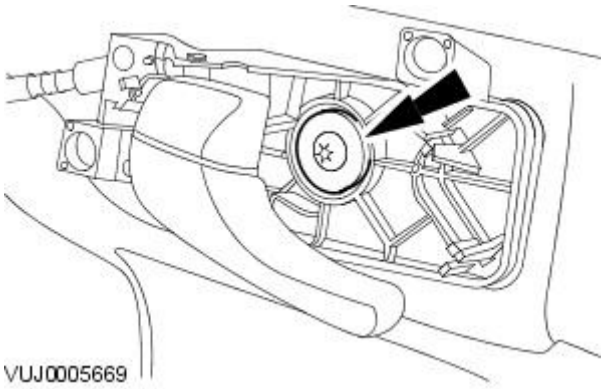


4. Release the actuator remote cable from the interior door handle.

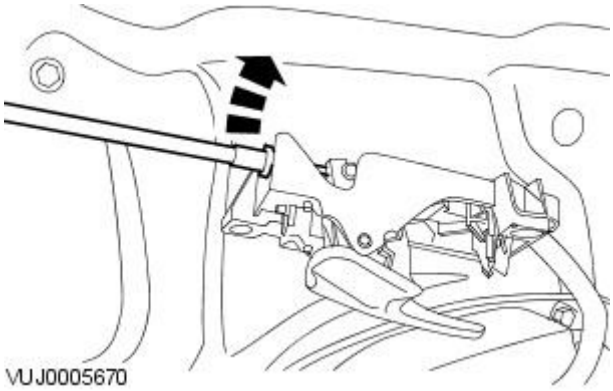


5. Remove the interior door handle.

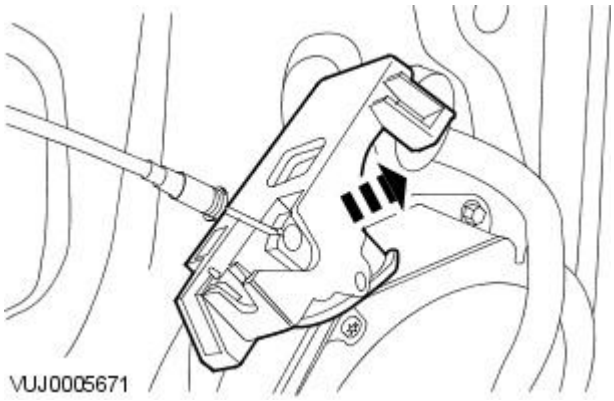


6. Remove the exterior door handle bezel retaining screw.

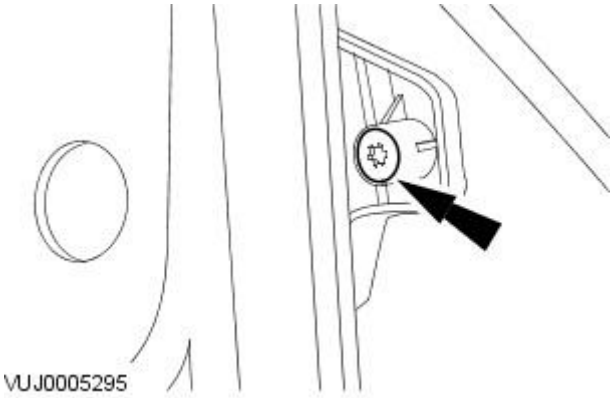


GETtheMANUALS.org

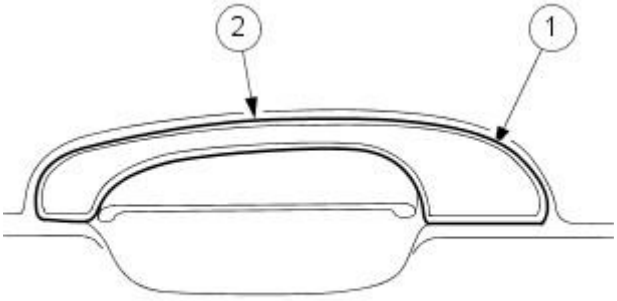


VUJ0004945

**7.** Remove the exterior door handle bezel.

1. Release the retaining clip.
2. Remove the exterior door handle bezel.

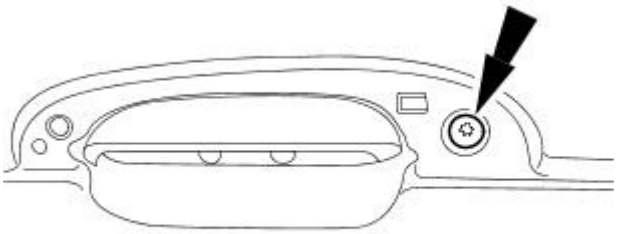

VUJ0005296

**8.** CAUTION: Apply suitable protective tape to the exterior door handle to prevent damage.

Remove the exterior door handle retaining screw.

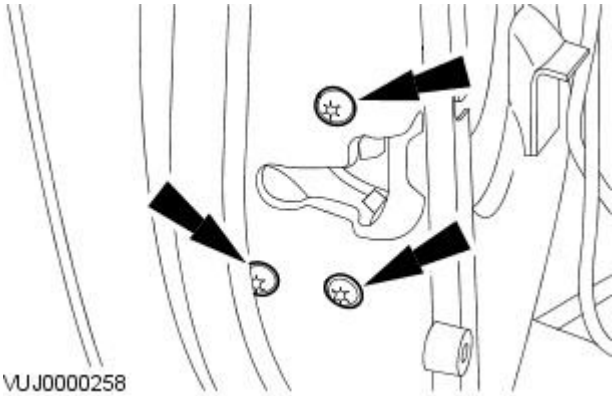

VUJ0000258

**9.** Remove the door actuator retaining screws.

**10.** Reposition the rear door actuator and exterior door handle assembly.

**11.** Remove the rear door actuator and exterior handle assembly.

- Disconnect the rear door actuator electrical connector.

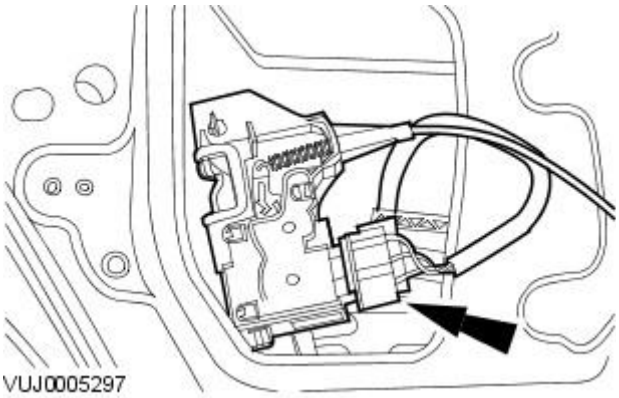

VUJ0005297

**12.** Disconnect the exterior door handle rod from the rear door actuator.

1. Release the tangs.
2. Disconnect the exterior door handle rod from the rear door actuator.

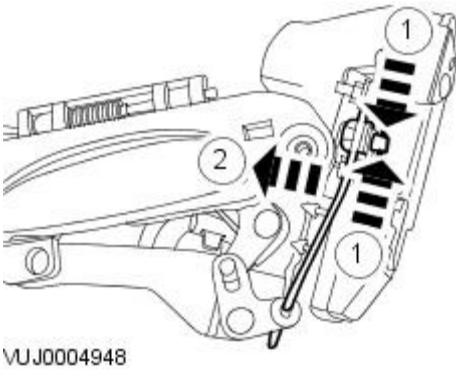


VUJ0004948

GETtheMANUALS.org

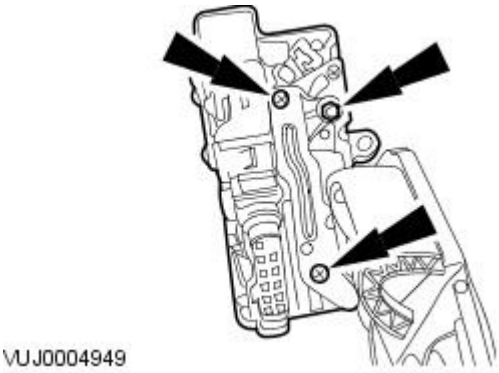


**13.** Remove the rear door actuator.

## Installation

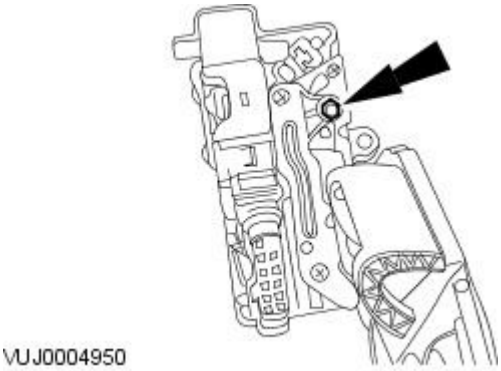


**1.** To install, reverse the removal procedure.

- Tighten to 4 Nm.

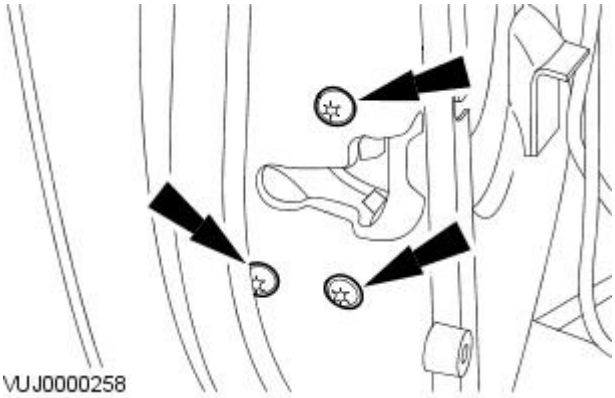


**2.** Tighten to 12 Nm.

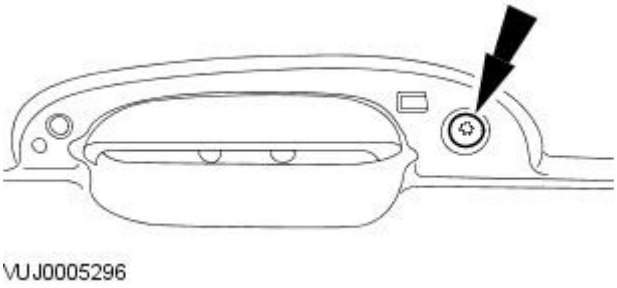


**3.** Tighten to 7 Nm.

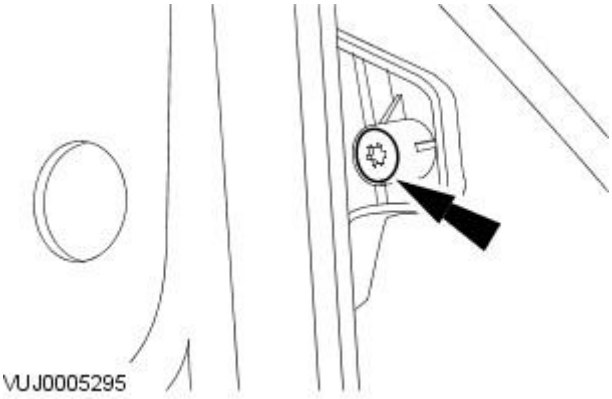


**4.** Tighten to 7 Nm.

GETtheMANUALS.org

# Wipers and Washers -

**Torque Specifications**

| Description | Nm | lb-ft | lb-in |
|---|---|---|---|
| Mounting arm and pivot shaft retaing bolts | 12 | 9 | — |
| Wiper arm retaining nuts | 17 | 13 | — |
| Wiper motor retaining retaining screws | 15 | 11 | — |
| Wiper motor shaft retaining nut | 17 | 13 | — |

GETtheMANUALS.org

# Wipers and Washers - Wipers and Washers

Description and Operation

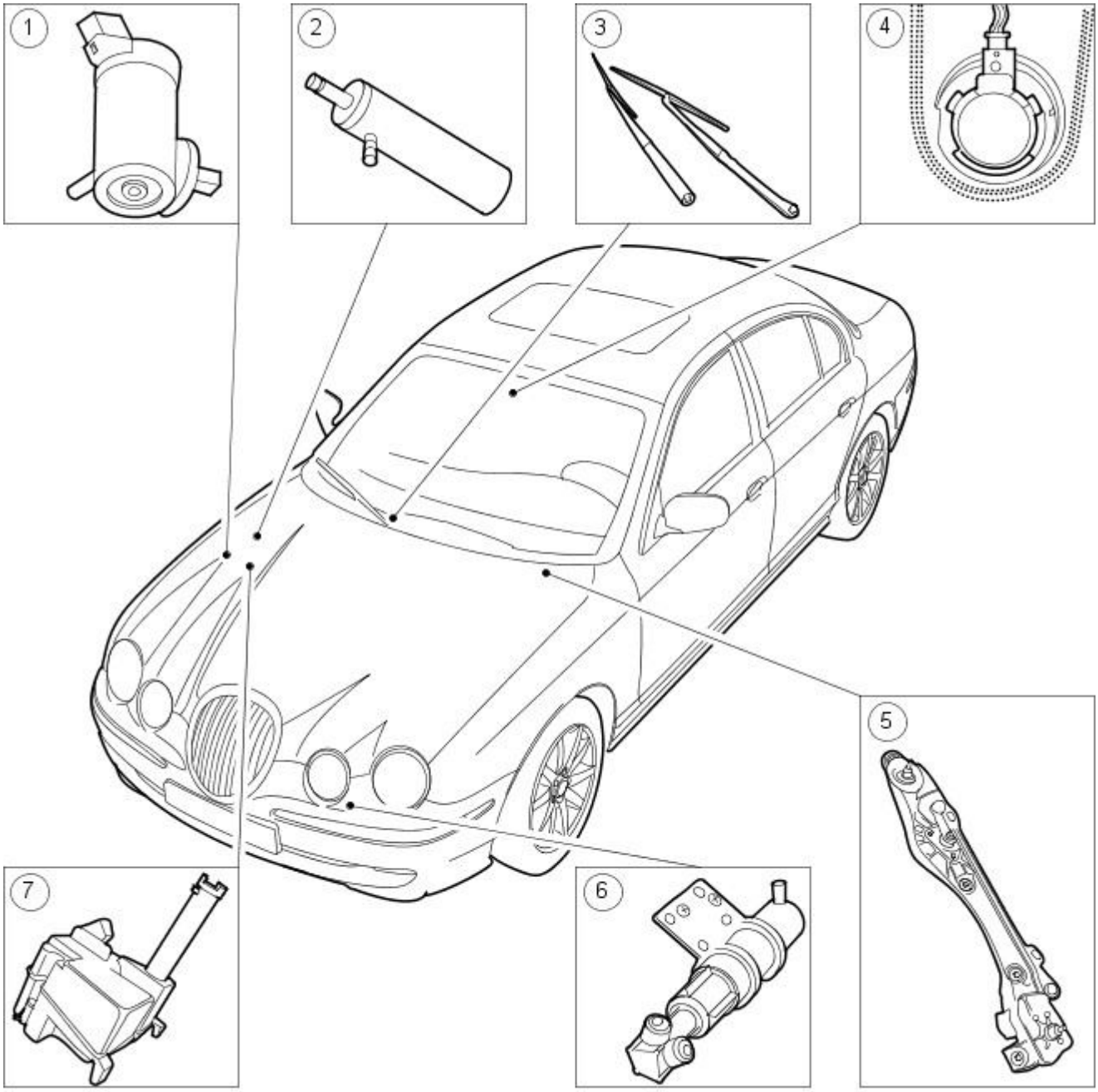


VUJ0005630

| Item | Part Number | Description |
|---|---|---|
| 1 | — | Windshield washer pump |
| 2 | — | Headlamp washer pump |
| 3 | — | Wiper pivot arms |
| 4 | — | Rain sensor |
| 5 | — | Wiper mounting arm and pivot shaft |
| 6 | — | Headlamp washer jet |
| 7 | — | Windshield washer reservoir |

The wipers and washers system consists of the following components: wipers and washers, mounting arm and pivot shaft, wiper motor, washer reservoir and washer pump, a headlamp washing system is available as an additional option.

The wipers have two speed control, low and high, and an intermittent wipe mode. The wipers will park automatically irrespective of their position when the OFF position of the ignition or control switch is selected.

Within the wiper and washer system the following features can be attained, adjustable interval intermittent wiping, programmable wash and wipe sequencing, autolamp activation and moisture sensitive wiping. The system and features are centrally controlled by the Front electronic module (FEM).

The intermittent wiping has seven speed settings, 3, 6, 9, 12, 15, 18 seconds and speed dependant. The driver also has the capacity to select these via a switch with seven settings.

The programmable wash and wipe sequence is driver controlled. With a depression of the wash/wipe switch between 40 milliseconds and 1.2 seconds the wash pump will be activated for a duration of 1.2 seconds. When the wash/wipe switch is depressed for longer than 1.2 seconds the wash pump will be activated for the duration of switch depression, a 10 second duration is the maximum available. The wiping system is automatically activated with the depression of the wash switch.

Where fitted, moisture sensitive wiping will be initiated when the vehicle is running and not in the PARK or NEUTRAL gear selection (gear engaged on manual vehicles). The wiper switch must be in the AUTO position.

GETtheMANUALS.org

# Wipers and Washers - Wipers and Washers

Diagnosis and Testing

## Inspection and Verification

1. **1.** Verify the customer concern.
2. **2.** Visually inspect for obvious signs of mechanical or electrical damage.

**Visual Inspection Chart**

| Mechanical | Electrical |
|---|---|
| • Wiper blade(s)<br>• Wiper pivot arm shaft<br>• Washer reservoir<br>• Hose(s)<br>• Washer jet(s) | • Fuse(s)<br>• Wiring harness<br>• Electrical connector(s)<br>• Washer pump(s)<br>• Wiper motor |

3. **3.** If an obvious cause for an observed or reported concern is found, correct the cause (if possible) before proceeding to the next step.
4. **4.** If the cause is not visually evident, verify the symptom and refer to the Jaguar Approved Diagnostic System.

GETtheMANUALS.org

# Wipers and Washers - Headlamp Washer Jet

Removal and Installation

## Removal

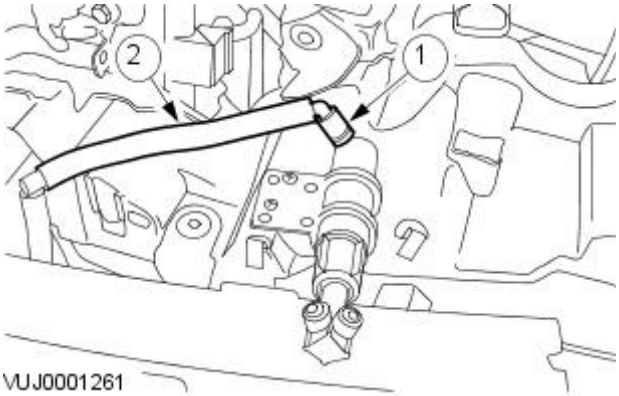


**1.** Remove the headlamp assembly.
For additional information, refer to Section 417-01 Exterior Lighting.

**2.** Disconnect the headlamp washer jet supply hose.

1. Remove the headlamp washer jet supply hose retaining clip.
2. Disconnect the headlamp washer jet supply hose.

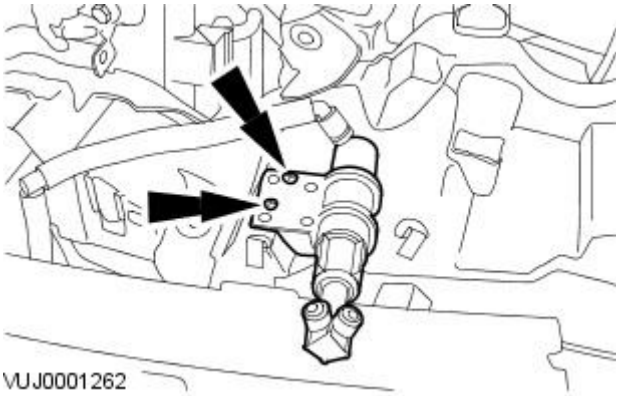


**3.** Remove the headlamp washer jet.

## Installation

**1.** To install, reverse the removal procedure.

GETtheMANUALS.org

# Wipers and Washers - Headlamp Washer Pump

Removal and Installation

## Removal

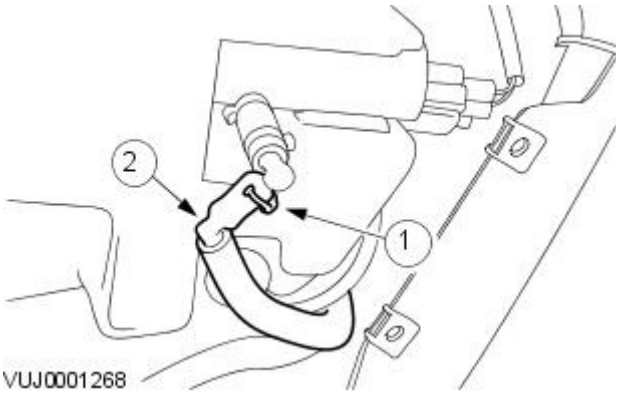


1. Remove the radiator splash shield.
   For additional information, refer to Section 501-02 Front End Body Panels.
2. Disconnect the headlamp washer pump supply hose.
   1. Remove the headlamp washer supply hose retaining clip.
   2. Disconnect the headlamp washer pump supply hose.

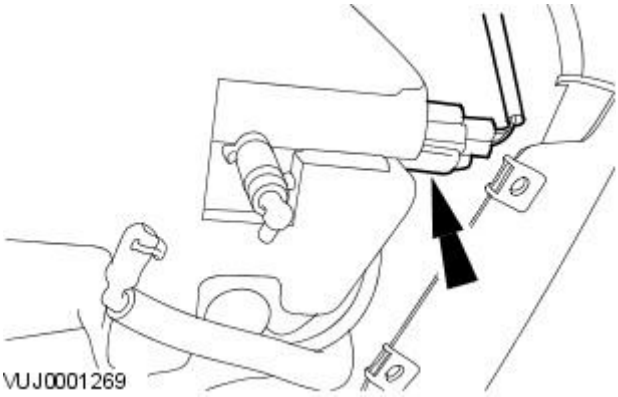


3. Disconnect the headlamp washer pump electrical connector.

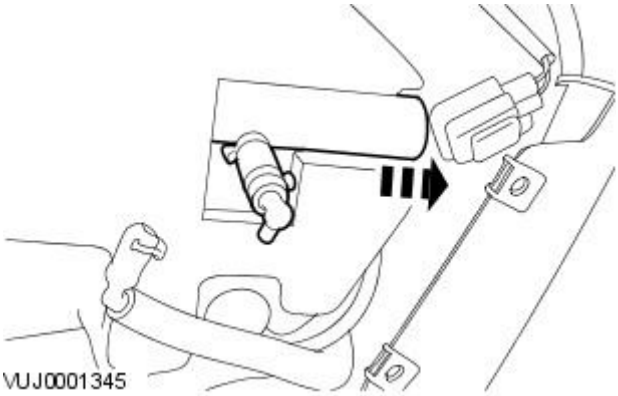


4. Remove the headlamp washer pump.

## Installation

1. To install, reverse the removal procedure.

GETtheMANUALS.org

# Wipers and Washers - Rain Sensor

Removal and Installation

## Removal

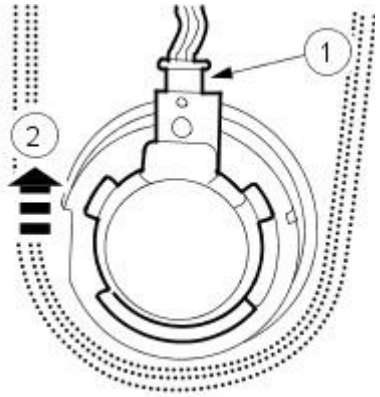


VUJ0004497

1. Remove the interior rear view mirror.
   For additional information, refer to Section 501-09 Rear View Mirrors.
2. Remove the rain sensor.
   1. Disconnect the rain sensor electrical connector.
   2. Remove the rain sensor.

## Installation

1. To install, reverse the removal procedure.

GETtheMANUALS.org

# Wipers and Washers - Rain Sensor Module

Removal and Installation

## Removal

1. Remove the parcel shelf.
   For additional information, refer to Section 501-05 Interior Trim and Ornamentation.
2. Disconnect the rain sensor module electrical connector.

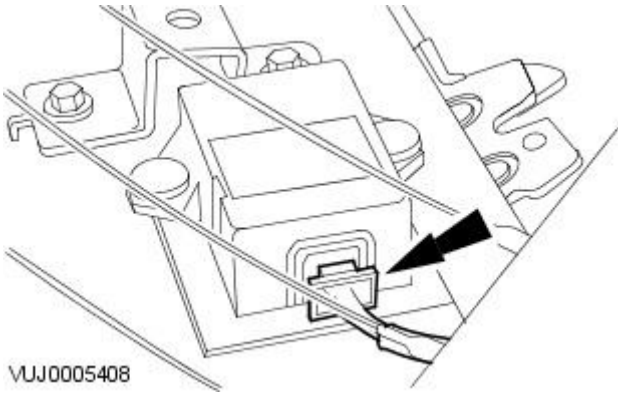


3. Remove the rain sensor module.

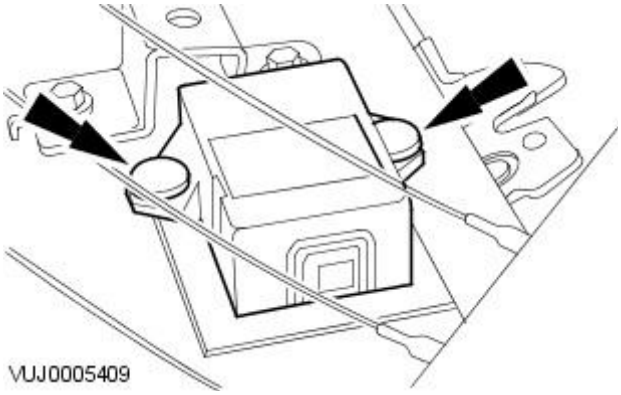


## Installation

1. To install, reverse the removal procedure.

GETtheMANUALS.org

# Wipers and Washers - Windshield Washer Pump

Removal and Installation

## Removal

1. Remove the radiator splash shield.
   For additional information, refer to Section 501-02 Front End Body Panels.
2. Disconnect the windshield washer pump supply hose.

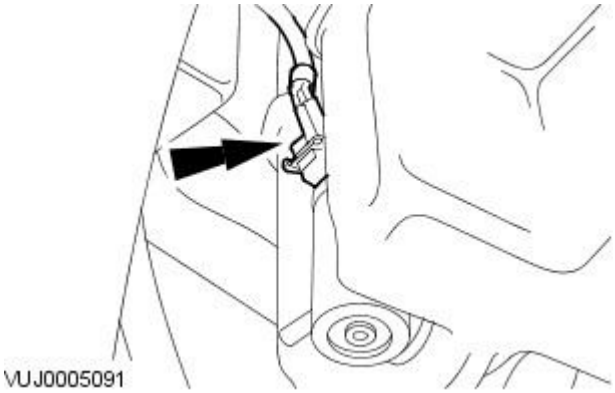


3. Disconnect the windshield washer pump electrical connector.

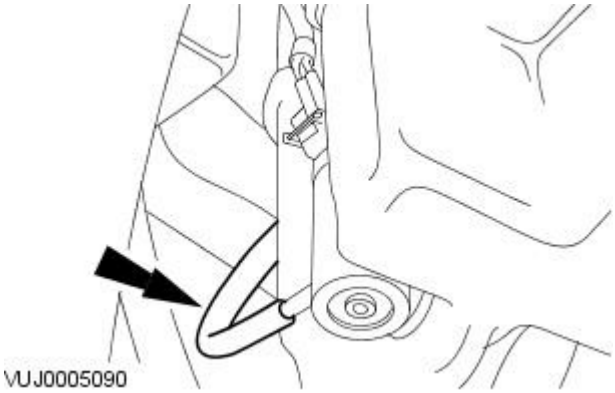


4. Remove the windshield washer pump.

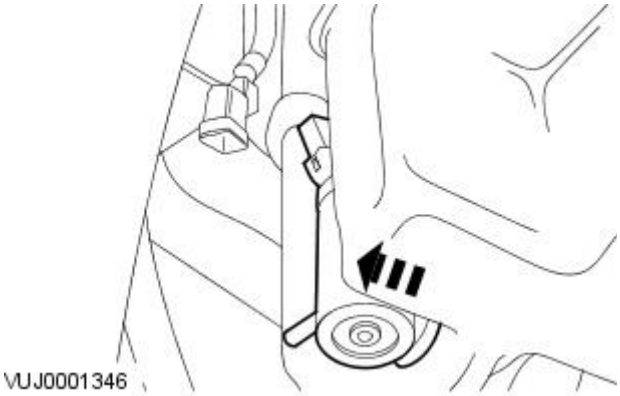


## Installation

1. To install, reverse the removal procedure.

GETtheMANUALS.org

# Wipers and Washers - Windshield Washer Reservoir

Removal and Installation

## Removal

1. Remove the radiator splash shield.
   For additional information, refer to Section 501-02 Front End Body Panels.
2. Remove the front fender splash shield.
   For additional information, refer to Section 501-02 Front End Body Panels.
3. Detach the washer fluid warning indicator electrical connector.

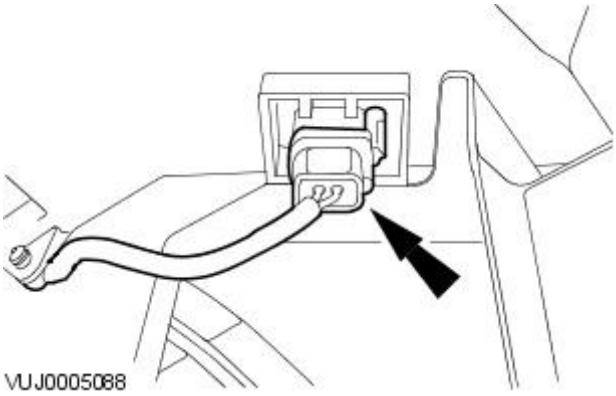


4. Disconnect the windshield washer pump supply hose.

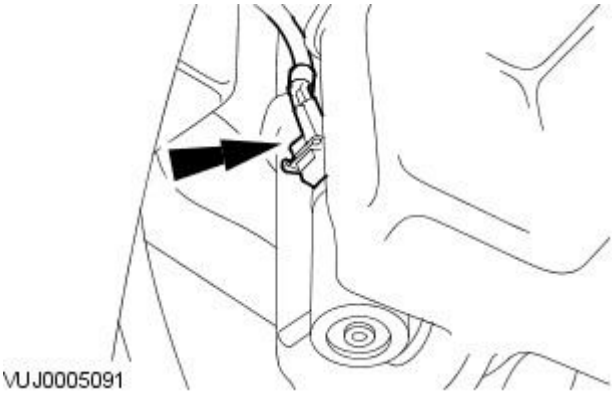


5. Disconnect the windshield washer pump electrical connector.

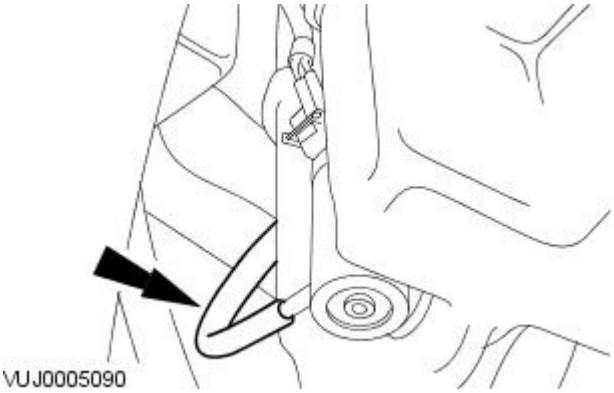


6. Disconnect the headlamp washer pump supply hose.
   1. Remove the headlamp washer pump supply hose retaining clip.
   2. Disconnect the headlamp washer pump supply hose.

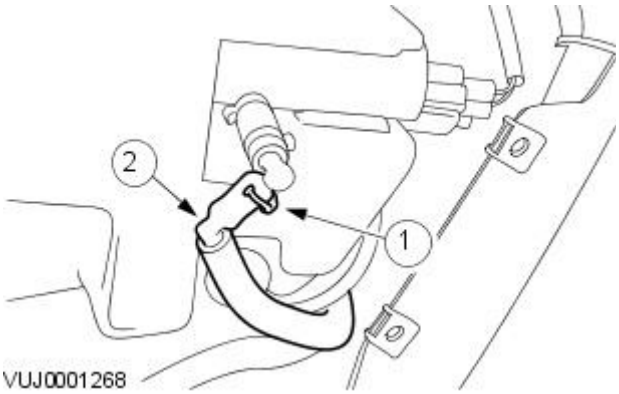


GETtheMANUALS.org

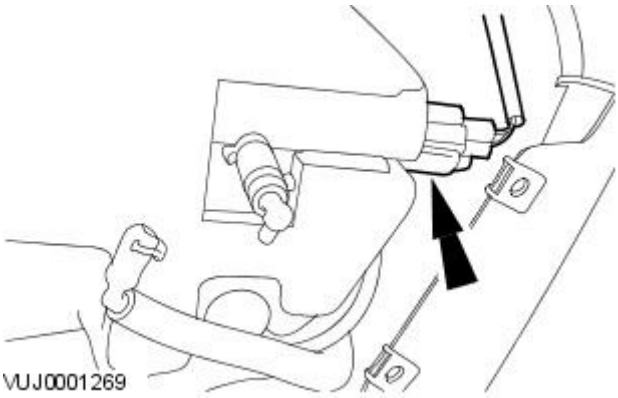


**7.** Disconnect the headlamp washer pump electrical connector.

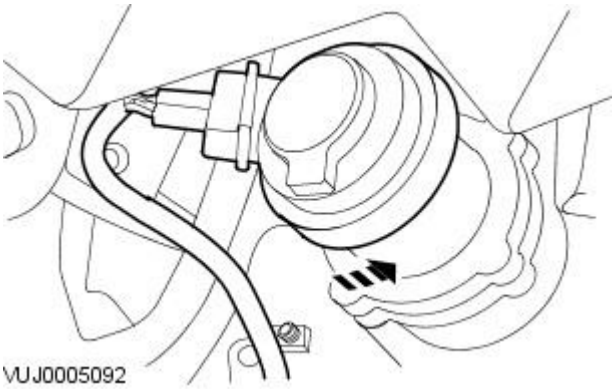


**8.** Detach the fog lamp cover.

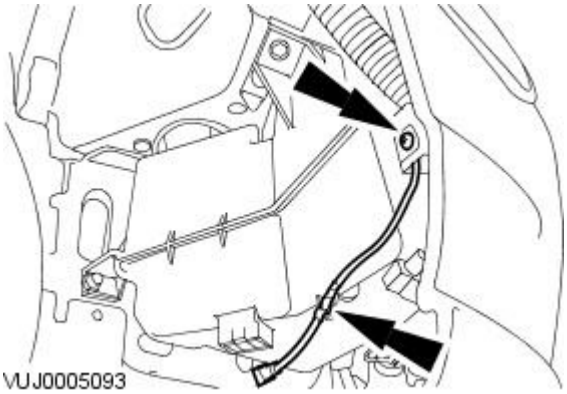


**9.** Detach the wiring harness.

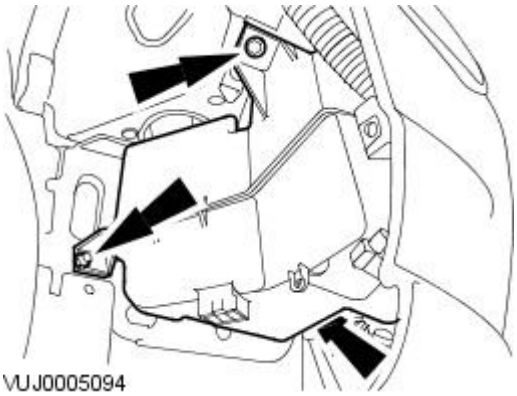


**10.** Remove the windshield washer reservoir.

## Installation

**1.** To install, reverse the removal procedure.

GETtheMANUALS.org

# Wipers and Washers - Wiper Mounting Arm and Pivot Shaft

Removal and Installation

## Removal

All vehicles

1. Disconnect the battery.
   For additional information, refer to: Battery Disconnect and Connect (414-01 Battery, Mounting and Cables, General Procedures).
2. Remove the cowl panel grille.
   For additional information, refer to: Cowl Panel Grille (501-02 Front End Body Panels, Removal and Installation).

Vehicles with diesel engine

3. Remove the brake booster.
   For additional information, refer to: Brake Booster (206-07 Power Brake Actuation, Removal and Installation).

All vehicles

4. Remove the drain tube.

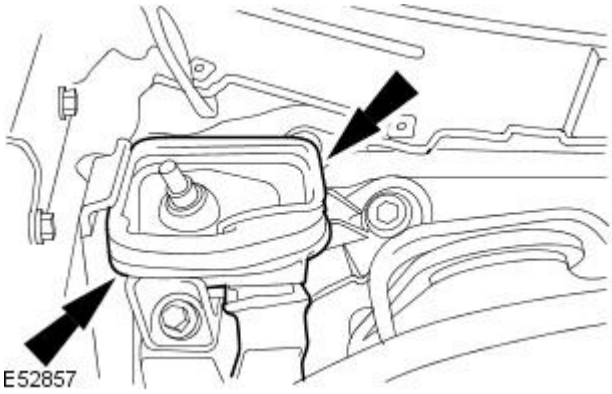


5. Detach the mounting arm, wiper motor and pivot shaft assembly.

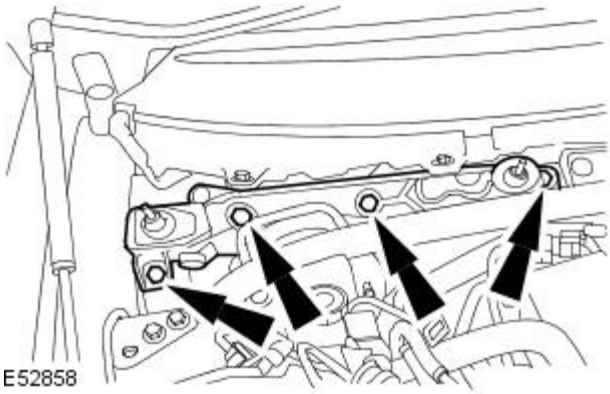


6. Remove the mounting arm, wiper motor and pivot shaft assembly.
   - Disconnect the wiper motor electrical connector.

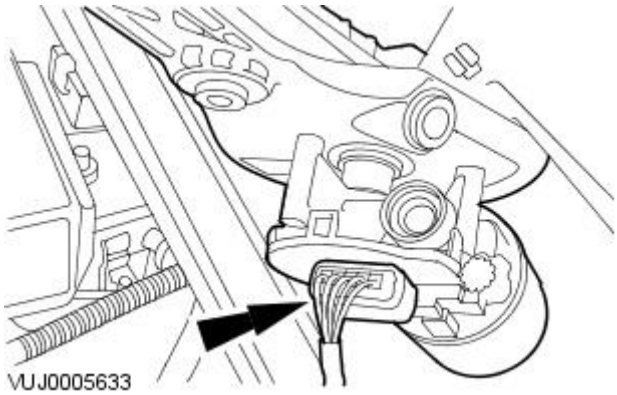


## Installation

GETtheMANUALS.org

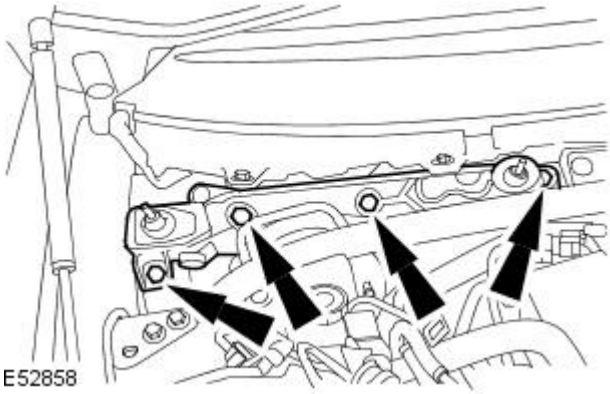


**1.** To install, reverse the removal procedure.

- Tighten to 12 Nm.

GETtheMANUALS.org

# Wipers and Washers - Wiper Pivot ArmVehicles Built From: 02/2004

Removal and Installation

| Special Tool(s) | |
|---|---|
| 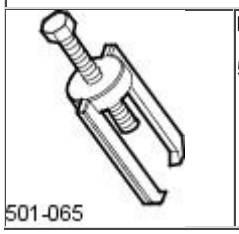 501-065 | Remover - Windshield Wiper Pivot Arm<br><br>501-065 |

## Removal

**1.** NOTE: Left-hand shown, right-hand similar.

Disconnect the washer pipe.

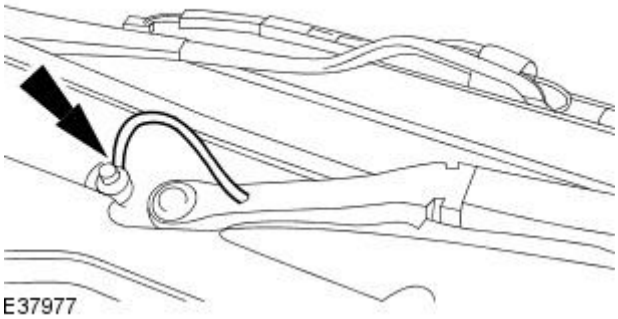


**2.** NOTE: Left-hand shown, right-hand similar.

Remove the wiper pivot arm retaining nut cover.

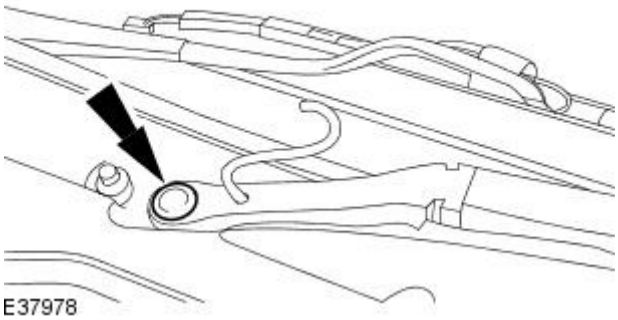


**3.** NOTE: Left-hand shown, right-hand similar.

Remove the wiper pivot arm retaining nut.

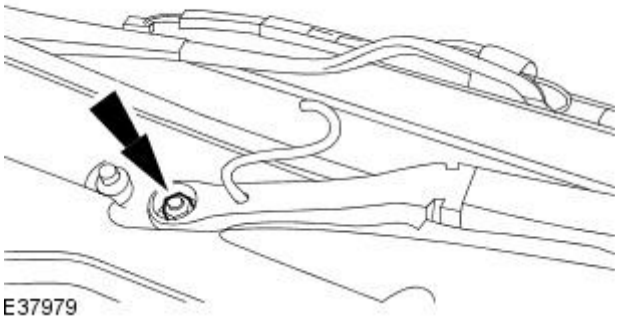


**4.** NOTE: Left-hand shown, right-hand similar.

Using the special tool, remove the wiper pivot arm.

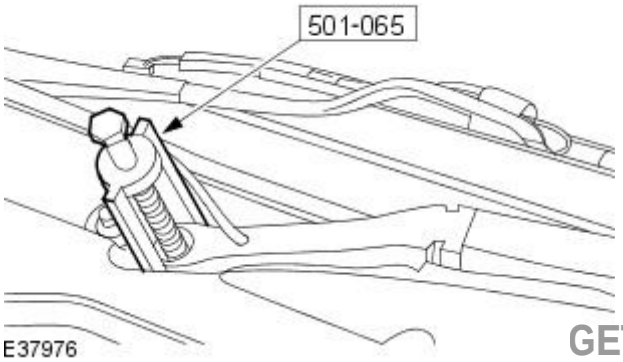


GETtheMANUALS.org

## Installation

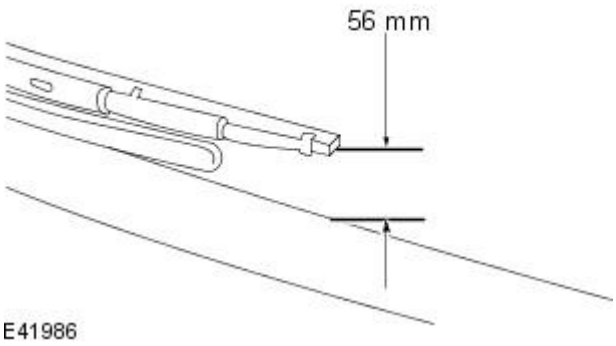


**1.** NOTE: Measure the distance between the tip of the wiper blade and the upper edge of the cowl vent screen.

Install the driver side wiper pivot arm.

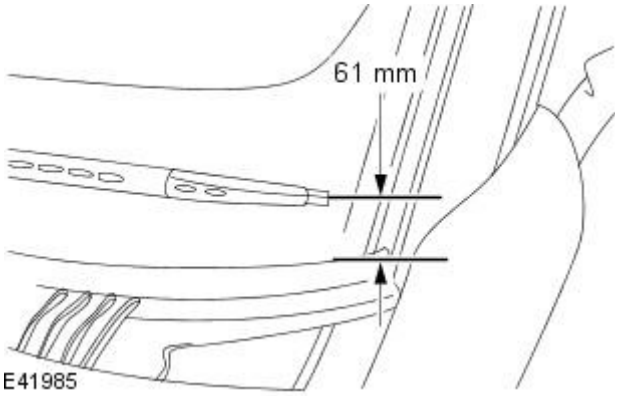


**2.** NOTE: Measure the distance between the tip of the wiper blade and the upper edge of the cowl vent screen.

Install the passenger side wiper pivot arm.

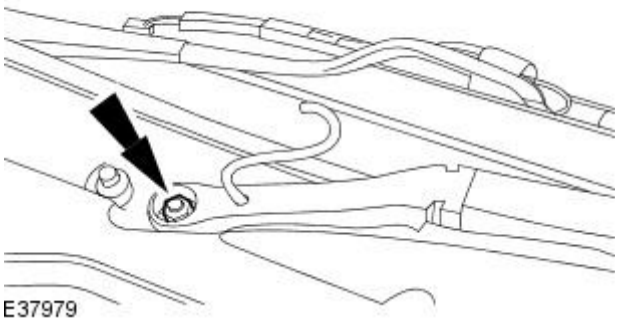


**3.** NOTE: Left-hand shown, right-hand similar.

Install the wiper pivot arm retaining nut.

- Tighten to 17 Nm.

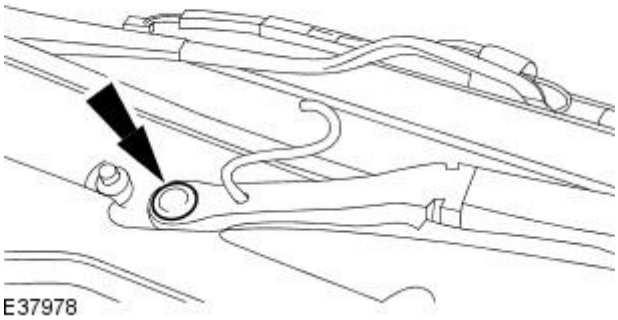


**4.** NOTE: Left-hand shown, right-hand similar.

Install the wiper pivot arm retaining nut cover.

GETtheMANUALS.org

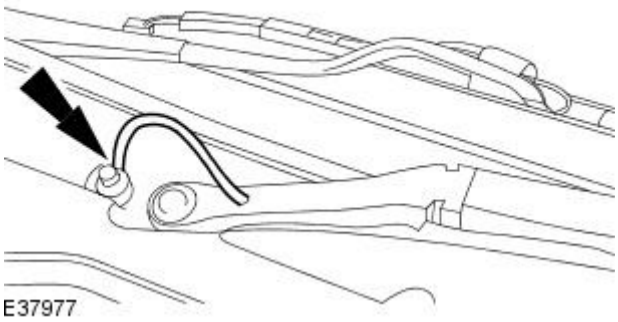


**5.** NOTE: Left-hand shown, right-hand similar.

Connect the washer pipe.

GETtheMANUALS.org

# Wipers and Washers - Wiper Pivot ArmVehicles Built Up To: 01/2004

Removal and Installation

| Special Tool(s) | |
|---|---|
| 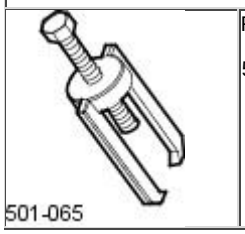 501-065 | Remover - windshield wiper pivot arm<br><br>501-065 |

## Removal

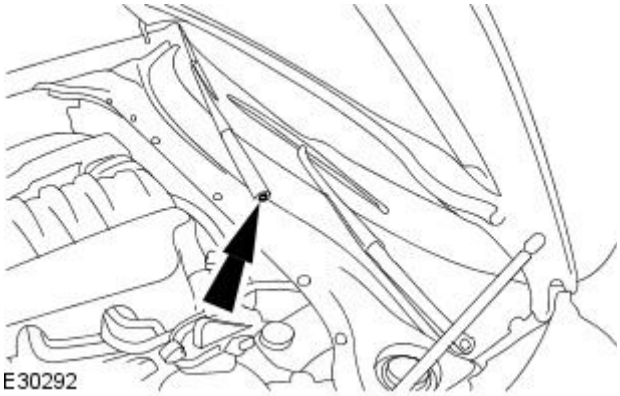


**1.** Remove the wiper pivot arm retaining nut cover.

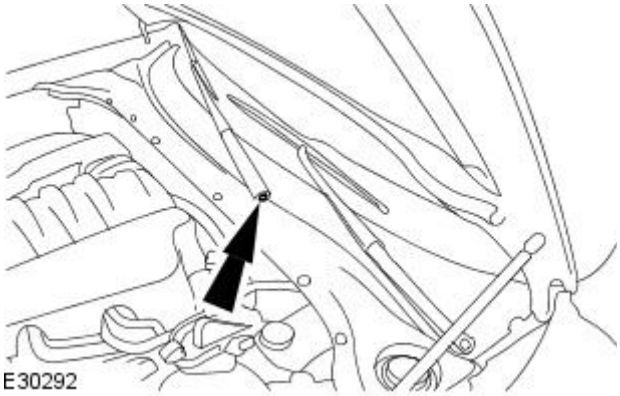


**2.** Remove the wiper pivot arm retaining nut.

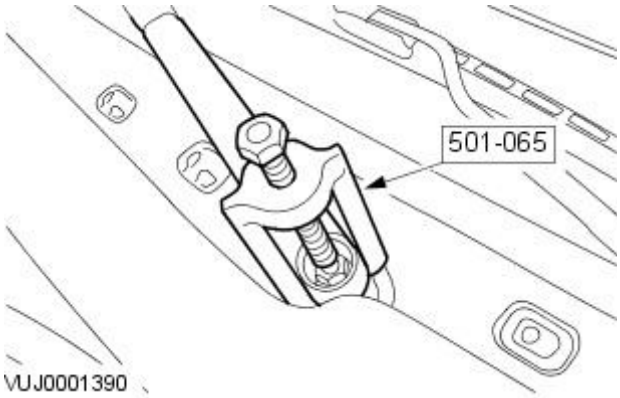


**3.** NOTE: Left-hand shown, right-hand similar.

Using the special tool, remove the wiper pivot arm.

## Installation

GETtheMANUALS.org

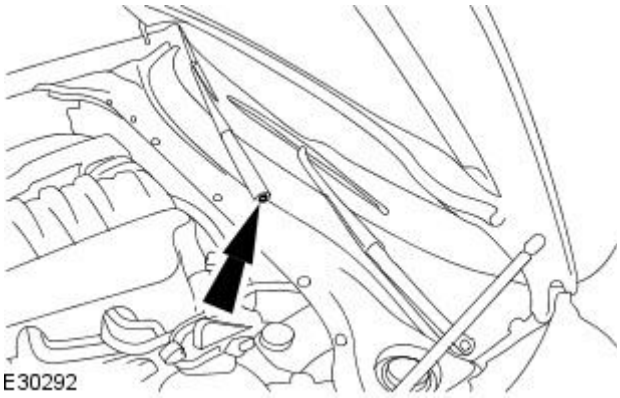


**1.** NOTE: Make sure the wiper pivot arm is correctly aligned with the alignment mark on the windshield.

To install, reverse the removal procedure.

1. Tighten to 17 Nm.

GETtheMANUALS.org

Published: 11-May-2011

# Roof Opening Panel -

**Torque Specifications**

| Description | Nm | lb-ft | lb-in |
|---|---|---|---|
| Roof opening panel frame retaining bolts | 9 | — | 80 |
| Roof opening panel motor retaining bolts | 3 | — | 27 |
| Roof opening panel glass retaining screws | 4 | — | 35 |

GETtheMANUALS.org

# Roof Opening Panel - Roof Opening Panel

Description and Operation

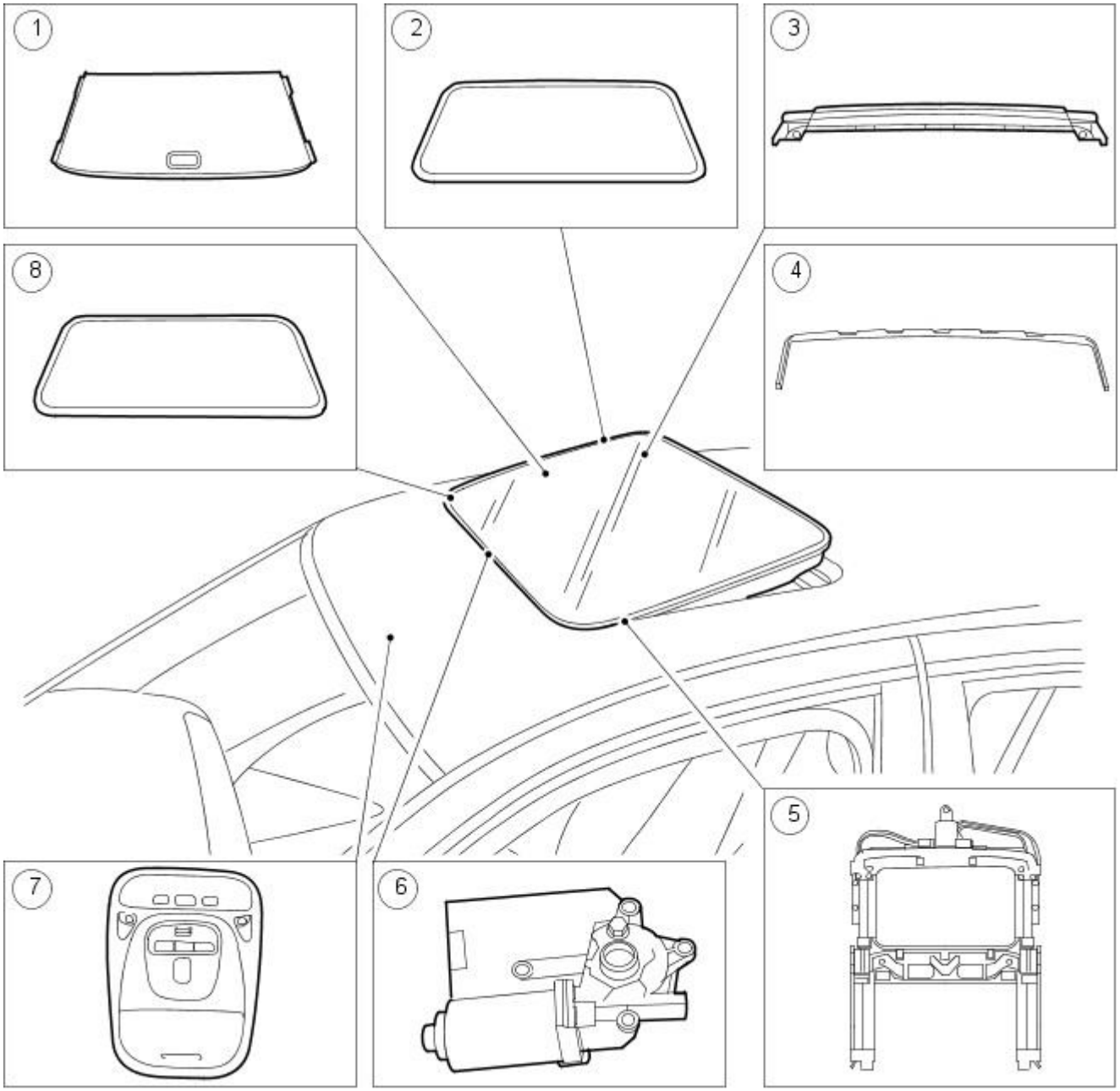


VUJ0005068

| Item | Part Number | Description |
|---|---|---|
| 1 | — | Roof opening panel shield |
| 2 | — | Roof opening panel glass |
| 3 | — | Trough assembly |
| 4 | — | Air deflector |
| 5 | — | Roof opening panel frame |
| 6 | — | Roof opening panel motor |
| 7 | — | Roof opening panel control switch |
| 8 | — | Roof opening panel weatherstrip |

The roof opening panel is available as an option. The roof opening panel control module controls the roof opening panel. The roof opening panel motor and module are not available separately. The roof opening panel may be operated from the roof opening panel switch or the global close function.

## Roof Opening Panel Control Switch Operation

The system operates as follows from the roof opening panel switch:

- Press the rear of the switch to the first detent with the roof opening glass in the closed position.
  - The roof opening panel glass opens rearward until the roof opening panel switch is released or the roof opening panel glass reaches the fully open position.
- Press the rear of the switch to the second detent with the roof opening panel glass in the closed position.
  - Activates the 'one touch' open feature.
  - The roof opening panel glass will slide rearward until the roof opening panel switch is pressed in any direction or the roof opening panel glass reaches the fully open position.
- Press the front of the switch to the first detent with the roof opening panel glass in the closed position.
  - The roof opening panel glass will vent up until the roof opening panel switch is released or the roof opening panel glass reaches the full vent up position.
- Press the front of the switch to the second detent with the roof opening panel glass in the closed position.
  - The roof opening glass will vent up until the roof opening glass reaches the full vent up position or the switch is pressed in any direction.

GETtheMANUALS.org

- Press the front of the switch to the first detent with the roof opening panel glass in the fully open position.
  - The roof opening panel glass will slide forward until the roof opening panel glass reaches the fully closed position or the switch is released.
- Press the front of the switch to the second detent with the roof opening glass in the fully open position.
  - The roof opening panel glass will close until the roof opening panel switch is pressed in any direction or the roof opening panel glass reaches the fully closed position.
- Press the rear of the switch to the first detent with the roof opening panel glass in the vent up position.
  - The roof opening panel glass will close until the roof opening panel switch is released or the roof opening panel glass reaches the full closed position.
- Press the rear of the switch to the second detent with the roof opening panel glass in the vent up position.
  - The roof opening panel glass will close until the roof opening panel switch is pressed in any direction or the roof opening panel glass reaches the fully closed position.

## Global Opening And Closing Operation

The roof opening panel is included in the global open and close operation. This function opens or closes the power windows and the roof opening panel automatically. For additional information on the global open and close feature for the power windows, refer to Section 501-11 Glass, Frames and Mechanisms. The global open function is activated by:

- unlocking the drivers door using the remote keyless entry transmitter. Within five seconds, press and hold the unlock button.
- unlocking the drivers door using the driver door lock cylinder and the key. Hold the key in the unlock position.

The global close function is activated by:

- turning the driver door lock cylinder to the lock position and holding.

Global open and close operation is only available with the ignition in the OFF position and the ignition key removed.

When the global open or close operation is selected, the roof opening panel switch is not recognized by the roof opening panel control module throughout the operation and five seconds after the operation is completed.

Global open and close will operate as follows:

- With the roof opening glass in the closed position, activating global open will operate the roof opening panel glass to the fully open position.
- With the roof opening panel glass in the fully open position, activating global close will operate the roof opening panel glass to the closed position.
- If a global open is commanded within five seconds of a completed global operation, the roof opening panel glass will reverse the previous completed global operation. If the roof opening glass was globally closed from the vent position, a global open within five seconds would tilt the roof opening panel glass back to the vent position.
- If the roof opening panel glass was globally closed from the fully open position, a global open within five seconds would slide the roof opening glass back to the fully open position.

GETtheMANUALS.org

# Roof Opening Panel - Roof Opening Panel

Diagnosis and Testing

## Principles of operation

### Roof Opening Panel Control Module

Battery power is continuously supplied to the roof opening panel control module. However, the roof opening panel will only operate from the roof opening panel switch with the ignition switch with the ignition a switch in the RUN or ACC position. The global open and close feature is controlled by two circuits from the REM. The two circuits must be at ground potential before the roof opening panel control module will acknowledge the roof opening panel switch. When the ignition switch is turned to RUN or ACC, the REM provides ground to these circuits.

The roof opening panel control module incorporates soft stops at the end of all travel positions. The roof opening panel control module monitors the internal switches to determine the roof opening glass position and the soft stops. The internal switches are activated by the roof opening panel motor rotation.

The roof opening panel control module supplies the power and ground to the roof opening panel motor depending on the ordered function. Power is supplied to the roof opening panel for a maximum of 12 seconds. Under normal operation, position is monitored by the roof opening panel control module and power is removed from the roof opening panel motor as soon as the roof opening panel reaches the commanded position.

### Roof Opening Panel Switch

Four circuits connect the roof opening panel switch to the roof opening panel control module. One circuit is the common return. The other three are control circuits open, close and tilt. The roof opening panel control module monitors these lines for voltage fluctuation to determine which function was selected.

With the ignition switch in the RUN or ACC position, the roof opening panel supplies a five volt reference voltage to three control lines. Activation of the roof opening panel switch connects one or more of these lines to the common return which pulls the line low. The roof opening panel control module will sense the line or lines being connected to the common line and carry out the appropriate function.

The express open function connects the open and tilt circuits to the common return when the roof opening panel switch is moved rearward to the second detent position. The operator-controlled open function connects the open circuit to the common return. The close function connects the close circuit to the common causing the roof opening panel to close from a slide or vent position.

### Global Open and Close

Two circuits connect the rear electronics module (REM) to the roof opening panel control module for these functions. Global open and close operation for the roof opening panel is controlled by one of these two circuits being grounded by the REM.

When the ignition switch is in the RUN or ACC position, the REM grounds both of these circuits allowing normal operation of the roof opening panel from the roof opening panel switch. Global open and close operation is only available with the ignition in the OFF position and the ignition key removed.

When global open or close operation is selected, the roof opening panel switch is not recognized by the roof opening panel control module throughout the operation and five seconds after the operation is completed.

With the ignition switch in the OFF position, the roof opening panel control module supplies a constant voltage to these two circuits. The roof opening panel control module monitors these lines for a low state, caused by the REM grounding the line, to determine the ordered global function by the REM.

Global open is commanded by the REM grounding control line two. Line one will remain at previous voltage.

Global close is commanded by the REM grounding control line one. Line two will remain at previous voltage.

If both lines have voltage, the roof opening panel will be inoperative.

## Inspection and Verification

1. **1.** Verify the customer concern by operating the system.
2. **2.** Visually inspect for obvious signs of mechanical and electrical damage.

**Visual Inspection Chart**

| Mechanical | Electrical |
|---|---|
| • Roof opening panel frame<br>• Roof opening panel glass weatherstrip<br>• Roof opening panel alignment<br>• Motor synchronization | • Fuse(s)<br>• Roof opening panel switch<br>• Roof opening panel motor<br>• Wiring harness<br>• Electrical connector(s) |

3. **3.** If an obvious cause for an observed or reported concern is found, correct the cause (if possible) before proceeding to the next step.
4. **4.** If the concern is not visually evident, verify the Symptom Chart.

## Symptom Chart

Refer to the Wiring Diagram manual for the connectors cited in the pinpoint tests.

### Symptom Chart

**Symptom Chart**

| Symptom | Possible Sources | Action |
|---|---|---|
| The roof opening panel has excessive wind noise | * Incorrect alignment.<br>* Roof opening panel weatherstrip. | * GO to Pinpoint Test A. |
| The roof opening panel leaks | * Incorrect alignment.<br>* Roof opening panel drain hoses.<br>* Roof opening panel weatherstrip. | * GO to Pinpoint Test B. |

GETtheMANUALS.org

| | | |
|---|---|---|
| The roof opening panel is noisy during operation | * Roof opening panel glass.<br>* Roof opening panel frame.<br>* Roof opening panel motor. | * GO to Pinpoint Test C. |
| The roof opening panel does not open or close | * Roof opening panel frame.<br>* Roof opening panel motor.<br>* Rear electronics module (REM).<br>* Roof opening panel switch.<br>* Wiring harness. | * GO to the Jaguar approved diagnostic system. |
| The roof opening panel does not open or close in vent position | * Roof opening panel control module.<br>* Roof opening panel switch.<br>* Wiring harness. | * GO to the Jaguar approved diagnostic system. |
| The roof opening panel does not stop flush from any position. | * Roof opening panel alignment.<br>* Roof opening weatherstrip.<br>* Roof opening panel control module. | * GO to Pinpoint Test D. |
| The 'one touch' open is inoperative | * Roof opening panel control module.<br>* Roof opening panel switch.<br>* Motor synchronization. | * GO to the Jaguar approved diagnostic system. |

## Pinpoint Tests

| PINPOINT TEST A : THE ROOF OPENING PANEL HAS EXCESSIVE WIND NOISE | |
|---|---|
| **TEST CONDITIONS** | **DETAILS/RESULTS/ACTIONS** |
| **A1: CHECK THE ROOF OPENING PANEL GLASS FIT** | |
| | 1 Cycle the roof opening glass from the fully open to the fully closed position. |
| | 2 Inspect the roof opening panel weatherstrip for proper fit or damage. |
| | Is the roof opening panel weatherstrip OK?<br>**Yes**<br>GO to A2.<br>**No**<br>INSTALL a new roof opening panel weatherstrip.<br>REFER to Weatherstrip in this section.<br>Test the system for normal operation. |
| **A2: CHECK THE ROOF OPENING PANEL GLASS OPERATION** | |
| | 1 Cycle the roof opening panel glass from the fully open to the fully closed position. |
| | Does the roof opening panel glass travel to the fully open and the fully closed position?<br>**Yes**<br>ADJUST the roof opening panel glass.<br>REFER to Roof Opening Panel Alignment in this section.<br>Test the system for normal operation.<br>**No**<br>CHECK the roof opening panel weatherstrip. If necessary, INSTALL a new roof opening panel weatherstrip.<br>REFER to Weatherstrip in this section.<br>TEST the system for normal operation. |

| PINPOINT TEST B : THE ROOF OPENING PANEL LEAKS | |
|---|---|
| **TEST CONDITIONS** | **DETAILS/RESULTS/ACTIONS** |
| **B1: CHECK THE ROOF OPENING PANEL OPERATION** | |
| | 1 Cycle the roof opening panel glass from the fully open position to the fully closed position. |
| | Does the roof opening panel glass operate smoothly and close tightly?<br>**Yes**<br>GO to B2.<br>**No**<br>CHECK the roof opening panel alignment.<br>REFER to Roof Opening Panel Alignment in this section.<br>Test the system for normal operation. |
| **B2: CHECK THE ROOF OPENING PANEL FRAME DRAIN TUBES** | |
| | 1 Gain access to the roof opening panel frame drain tubes. |
| | Is there blockage or damage to the roof opening panel frame drain tubes?<br>**Yes**<br>Clear the blockage or if necessary, INSTALL a new drain tube. TEST the system for normal operation.<br>**No**<br>GO to B3. |
| **B3: CHECK THE ROOF OPENING PANEL WEATHERSTRIP** | |
| | 1 Actuate the roof opening panel glass to the fully open position. |
| | Is the roof opening panel weatherstrip damaged?<br>**Yes**<br>INSTALL a new roof opening panel weatherstrip.<br>REFER to Weatherstrip in this section.<br>TEST the system for normal operation.<br>**No**<br>REPAIR as necessary. TEST the system for normal operation. |

| PINPOINT TEST C : THE ROOF OPENING PANEL IS NOISY DURING OPERATION | |
|---|---|
| **TEST CONDITIONS** | **DETAILS/RESULTS/ACTIONS** |
| **C1: CHECK THE OPERATION OF THE ROOF OPENING PANEL GLASS** | |
| | 1 Cycle the roof opening glass from the fully open to the fully closed position. |
| | Is the roof opening panel glass loose?<br>**Yes**<br>ADJUST the roof opening glass.<br>REFER to Roof Opening Panel Alignment in this section.<br>TEST the system for normal operation.<br>**No**<br>GO to C2. |
| **C2: CHECK FOR OBSTRUCTIONS** | |

GETtheMANUALS.org

| | |
|---|---|
| | 1 Check the roof opening panel frame for foreign material, damage or looseness. |
| | Is the roof opening panel obstructed or damaged?<br>**Yes**<br>REMOVE the obstruction. If necessary, INSTALL a new roof opening panel track and rail assembly.<br>REFER to Roof Opening Panel Frame in this section.<br>TEST the system for normal operation.<br>**No**<br>GO to C3. |
| **C3: CHECK THE ROOF OPENING PANEL MOTOR** | |
| | 1 Cycle the roof opening panel glass from the fully open to the fully closed position. |
| | Does the roof opening panel motor make excessive noise?<br>**Yes**<br>CHECK the roof opening panel motor for correct mounting. If necessary, INSTALL a new roof opening panel motor.<br>REFER to Motor in this section.<br>TEST the system for normal operation.<br>**No**<br>REFER to Roof Opening Panel Alignment in this section. ADJUST the roof opening panel glass as necessary. TEST the system for normal operation. |

| **PINPOINT TEST D : THE ROOF OPENING PANEL DOES NOT STOP FLUSH FROM ANY POSITION** | |
|---|---|
| **TEST CONDITIONS** | **DETAILS/RESULTS/ACTIONS** |
| **D1: CHECK THE ROOF OPENING PANEL ALIGNMENT** | |
| | 1 Check the roof opening panel alignment.<br>REFER to Roof Opening Panel Alignment in this section. |
| | Is the roof opening glass adjusted correctly?<br>**Yes**<br>GO to D2.<br>**No**<br>ADJUST the roof opening glass as necessary. TEST the system for normal operation. |
| **D2: CHECK THE ROOF OPENING PANEL WEATHERSTRIP** | |
| | 1 Inspect the roof opening panel weatherstrip for looseness, damage and correct installation. |
| | Is the roof opening panel weatherstrip OK and installed correctly?<br>**Yes**<br>GO to D3.<br>**No**<br>REPAIR or INSTALL a new roof opening panel weatherstrip as necessary.<br>REFER to Weatherstrip in this section.<br>TEST the system for normal operation. |
| **D3: CHECK FOR OBSTRUCTION IN THE ROOF OPENING PANEL** | |
| | 1 Inspect the roof opening panel assembly for obstructions in the frame. |
| | Are any obstructions found?<br>**Yes**<br>REMOVE the obstruction. If necessary, INSTALL a new roof opening panel frame.<br>REFER to Roof Opening Panel Frame in this section.<br>TEST the system for normal operation.<br>**No**<br>INSTALL a new roof opening panel control module.<br>REFER to Roof Opening Panel Motor in this section.<br>TEST the system for normal operation. |

GETtheMANUALS.org

# Roof Opening Panel - Motor Synchronization

General Procedures

## Roof Opening Panel Motor Synchronization Procedure

**1.** NOTE: If the is battery is disconnected when the roof opening panel is not operating, the roof opening panel will retain its memory and the synchronization procedure will not be required.

Operate the roof opening panel switch in the tilt position until the roof opening panel is in the fully tilted position.

**2.** Release the roof opening panel switch.

**3.** NOTE: This operation must be done within five seconds of the previous step.

Operate the roof opening panel switch in the tilt position and hold.

**4.** Release the roof opening panel switch after the roof opening panel has reached the fully closed position.

**5.** NOTE: If the roof opening panel motor synchronization has been completed correctly, when the roof opening panel switch is operated in the fully open position the roof opening panel should move to the fully open position automatically.

• NOTE: If the roof opening panel does not move to the fully open position, repeat the roof opening panel motor synchronization procedure.

Operate the roof opening panel switch to check the roof opening panel motor operation.

## Roof Opening Panel Motor Synchronization De-activation Procedure.

**1.** Operate the roof opening panel control switch in the tilt position until the roof opening panel is in the fully tilted position and release. Then hold the roof opening panel control switch in the tilt position for at least twenty seconds, there will be a small movement from the roof opening panel to indicate it has been de-activated.

GETtheMANUALS.org

# Roof Opening Panel - Roof Opening Panel Alignment

General Procedures

Short wheelbase

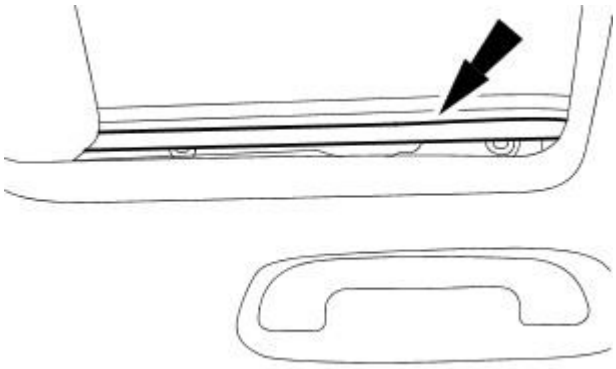

E30349

**1.** NOTE: Left-hand shown, right-hand similar.

Detach the sight shield at the front of the roof and swing inwards towards the rear of vehicle.

Long wheelbase

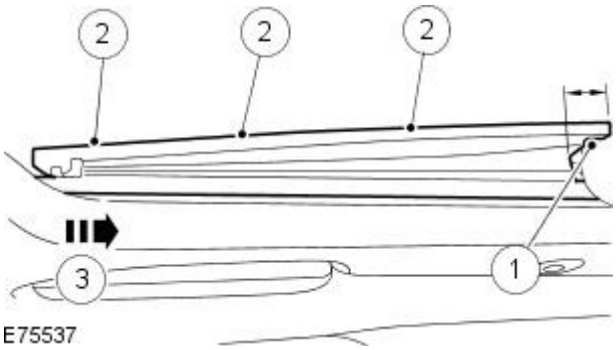


E75537

**2.** CAUTIONS:

Make sure the air deflector is only detached from the roof opening panel using the 20mm (0.78 inches) area at the end of the air deflector as defined in step 1 of the ilustration and text below. Failure to follow this instruction will result in damage to the component.

Do not pull on the air deflector rubber pleat. Failure to follow this instruction will result in damage to the component.

- NOTE: Right-hand shown, left-hand similar.

Detach the air deflector.

1. Detach the rear of the air deflector.
2. Detach the air deflector upper retainer.
3. Swing the front of the air deflector inwards towards the rear of the vehicle.

All vehicles

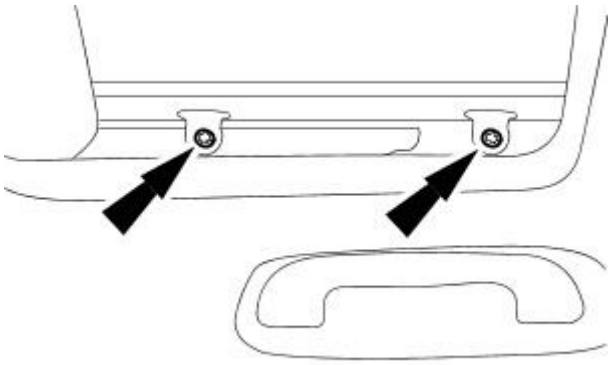

E30350

**3.** NOTE: Left-hand shown, right-hand similar.

Loosen the roof opening panel glass retaining screws.

**4.** Adjust the front edge of the roof opening panel glass to between flush and 1 mm (0.04 in) low.

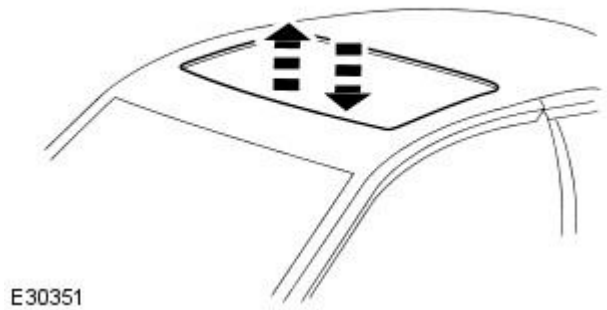

E30351

GETtheMANUALS.org

**5.** Adjust the rear glass edge to between flush and 1 mm (0.04 in) low.

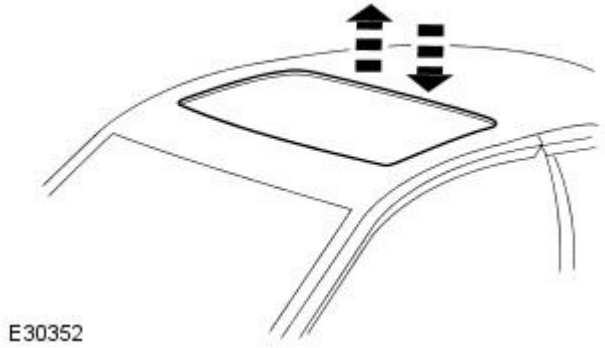


**6.** NOTE: Left-hand shown, right-hand similar.

Tighten to 4 Nm.

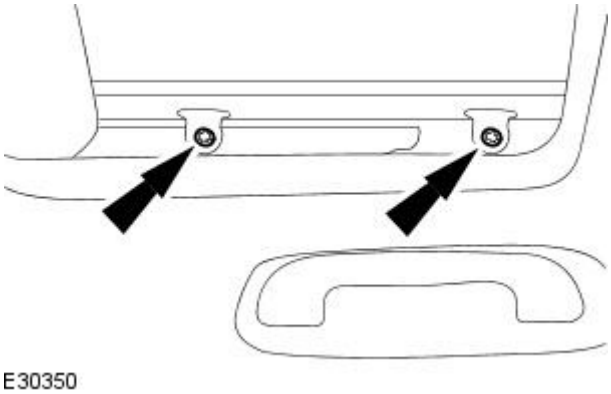


Long wheelbase

**7.** NOTE: Right-hand shown, left-hand similar.

Reposition the air deflector to the roof opening panel runner.

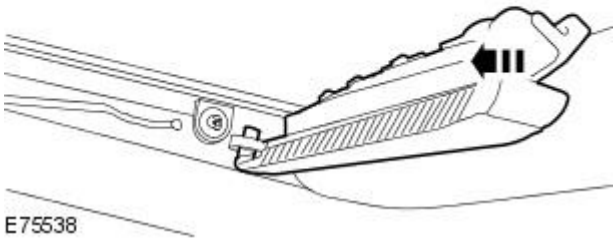


**8.** NOTE: Right-hand shown, left-hand similar.

Install the air deflector.

1. Make sure the air deflector is fully seated to the rear retaining clip.
2. Attach the air deflector upper retainer.

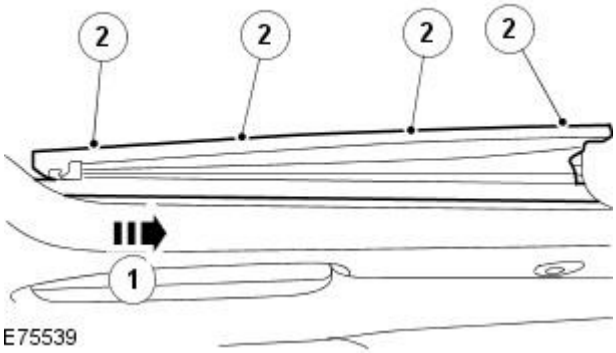


Short wheelbase

GETtheMANUALS.org

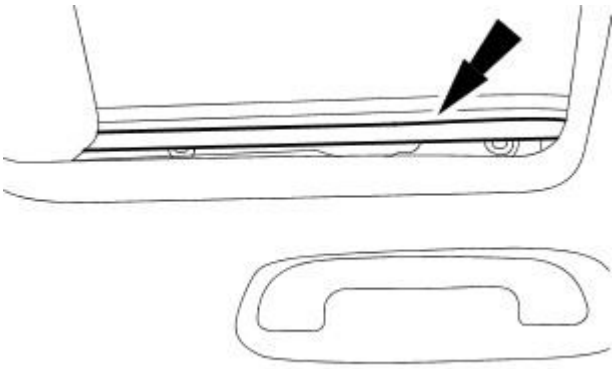

E30349

**9.** NOTE: Left-hand shown, right-hand similar.

Install the sight shields.

GETtheMANUALS.org

# Roof Opening Panel - Air Deflector

Removal and Installation

## Removal

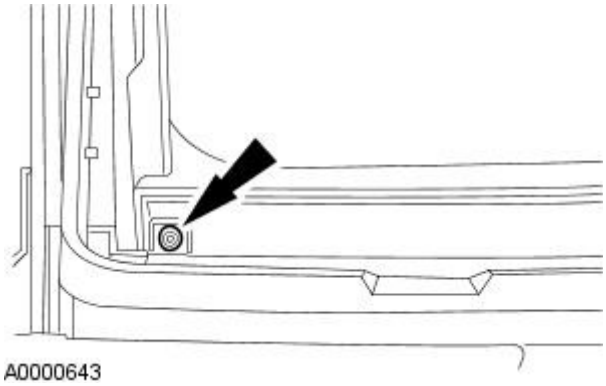


**1.** Reposition the roof opening glass fully rearward.

**2.** NOTE: Right-hand shown, left-hand similar.

Remove the air deflector retaining screws.

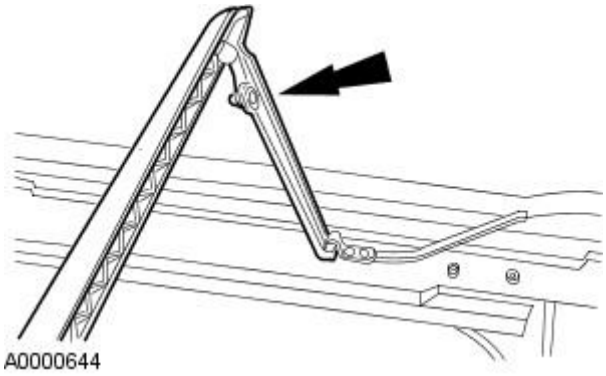


**3.** Remove the air deflector.

## Installation

**1.** CAUTION: Do not over tighten the air deflector retaining screws when installing.

To install, reverse the removal procedure.

GETtheMANUALS.org

# Roof Opening Panel - Roof Opening Panel Frame

Removal and Installation

## Removal

1. Remove the roof opening panel shield.
   For additional information, refer to Roof Opening Panel Shield in this section.
2. Remove both A-pillar trim panels.
   For additional information, refer to Section 501-05 Interior Trim and Ornamentation.
3. Remove both B-pillar upper trim panels.
   For additional information, refer to Section 501-05 Interior Trim and Ornamentation.
4. Remove both C-pillar trims.
   For additional information, refer to Section 501-05 Interior Trim and Ornamentation.
5. Remove both sun visors.
   For additional information, refer to Section 501-05 Interior Trim and Ornamentation.
6. NOTE: Left-hand shown, right-hand similar.

   Remove the sun visor retaining clip.

E30398

7. Remove the overhead console.
   For additional information, refer to Section 501-12 Instrument Panel and Console.
8. NOTE: Left-hand shown, right-hand similar.

   Detach the rear passenger assist handle retaining screw covers.

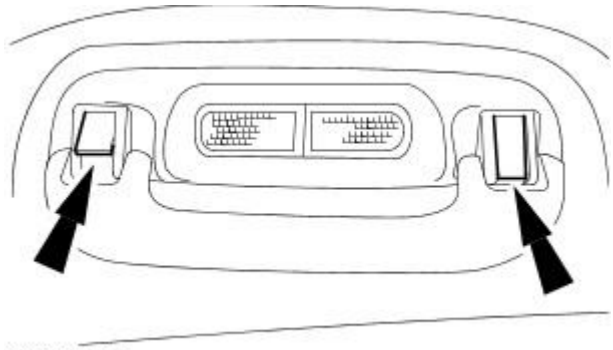

VUJ0005703

9. NOTE: Left-hand shown, right-hand similar.

   Detach the rear passenger assist handle.

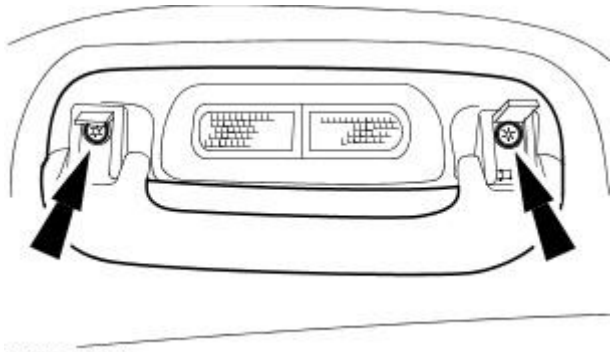

VUJ0005704

GETtheMANUALS.org

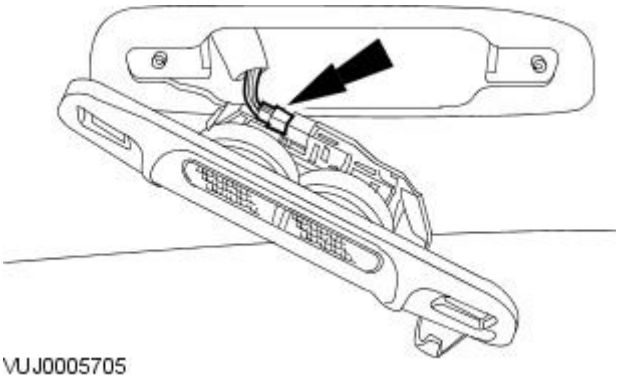


**10.** NOTE: Left-hand shown, right-hand similar.

Remove the rear passenger assist handle.

- Disconnect the electrical connector.

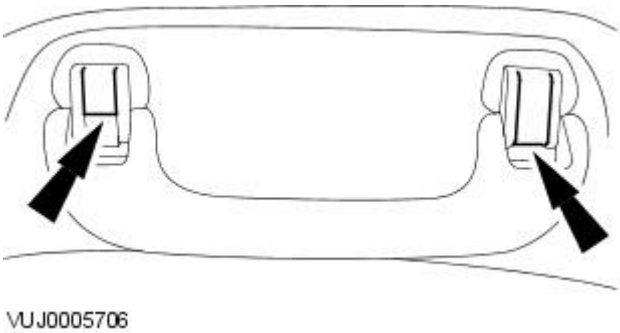


**11.** NOTE: Left-hand shown, right-hand similar.

Detach the front passenger assist handle retaining screw covers.

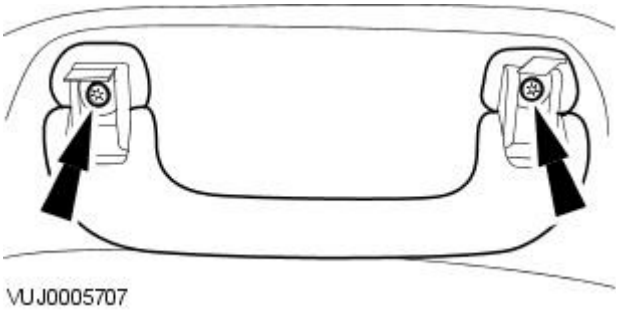


**12.** NOTE: Left-hand shown, right-hand similar.

Remove the front passenger assist handle.

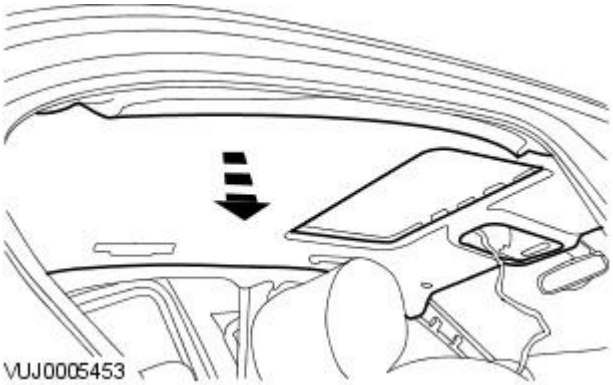


**13.** Detach the headliner.

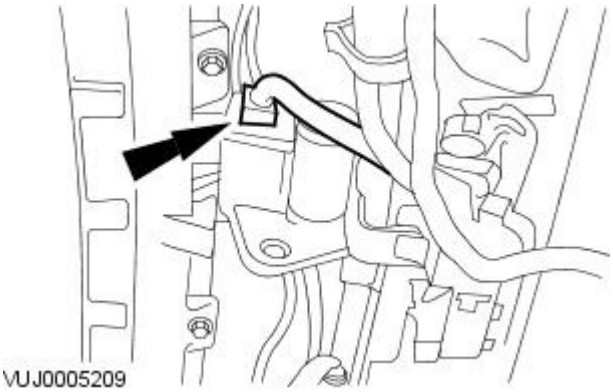


**14.** Disconnect the electrical connector

GETtheMANUALS.org

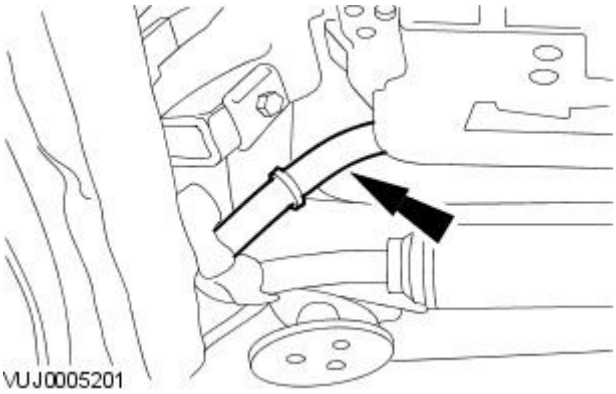


**15.** NOTE: Left-hand shown, right-hand similar.

Detach the front drain hose.

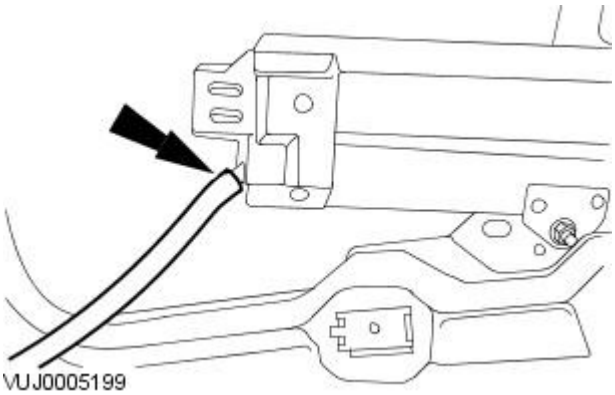


**16.** NOTE: Left-hand shown, right-hand similar.

Detach the rear drainhose.

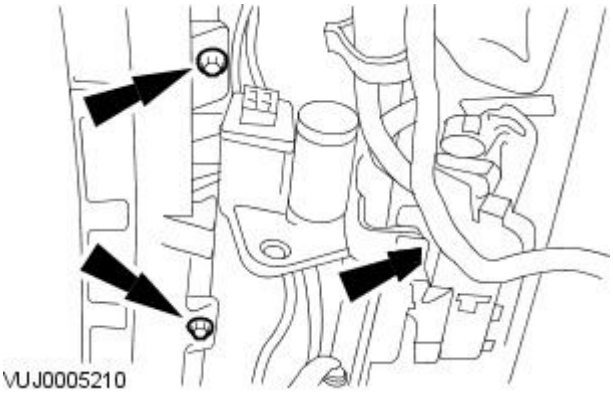


**17.** Remove the roof opening panel frame front retaining bolts.

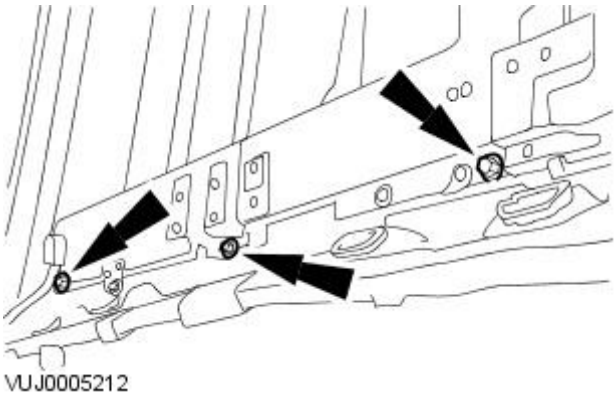


**18.** NOTE: Left-hand shown, right-hand similar.

Remove the roof opening panel frame retaining bolts.

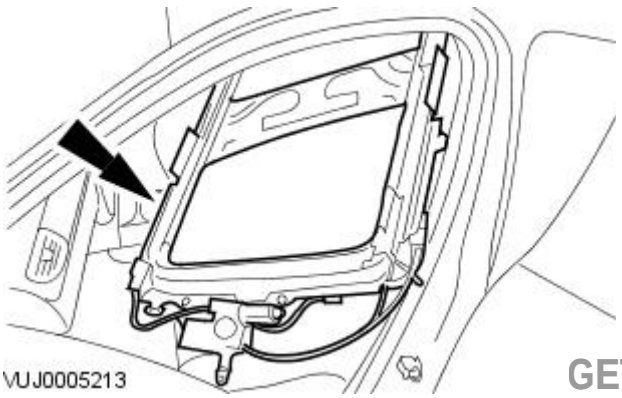


**19.** Remove the roof opening panel frame.

GETtheMANUALS.org

## Installation

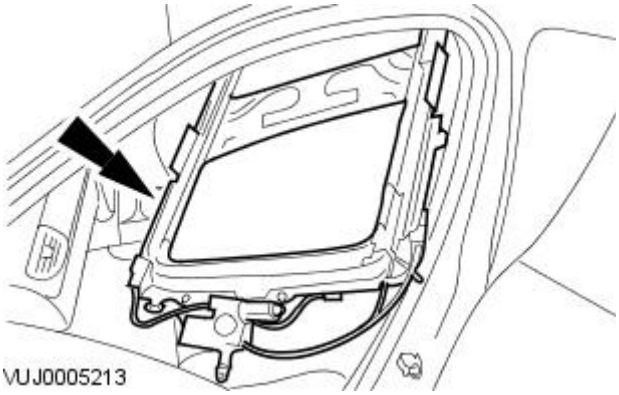


**1.** Install the roof opening panel frame.

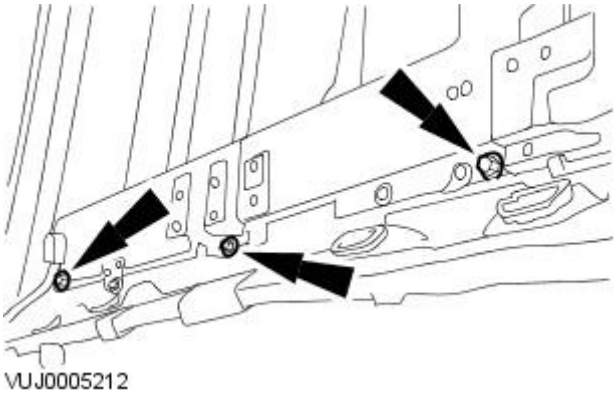


**2.** NOTE: Left-hand shown, right-hand similar.

Loosely install the roof opening panel frame bolts.

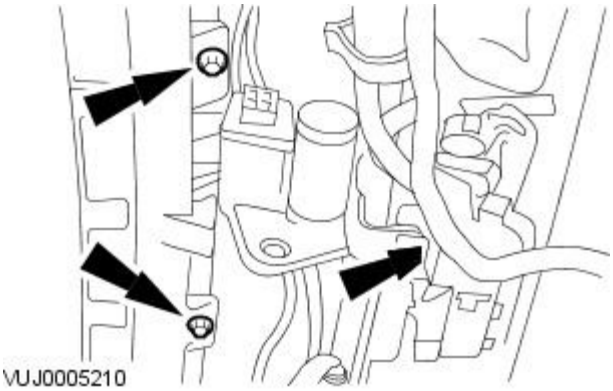


**3.** Loosely install the roof opening panel front frame bolts.

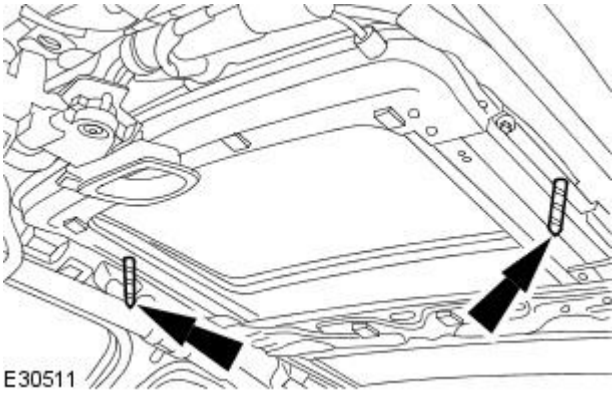


**4.** Align the roof opening panel frame using a 12 mm drill bit.

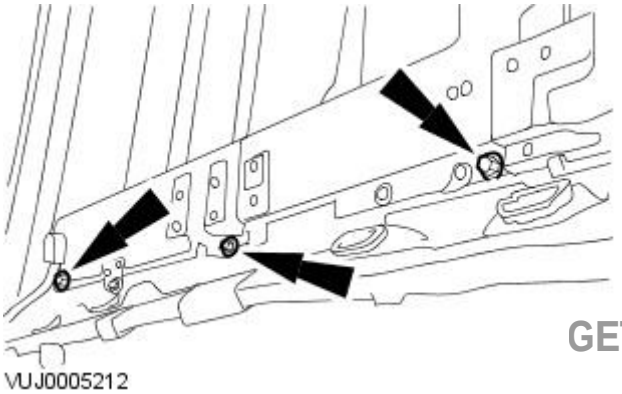


**5.** NOTE: Left-hand shown, right-hand similar.

Tighten to 9 Nm.

GETtheMANUALS.org

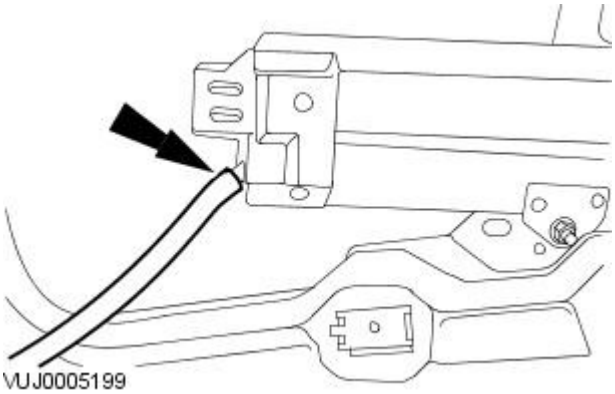


**6.** NOTE: Left-hand shown, right-hand similar.

Install the rear drain hose.

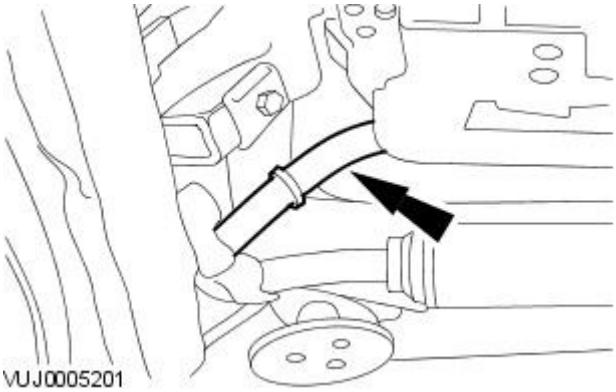


**7.** NOTE: Left-hand shown, right-hand similar.

Install the front drain hose.

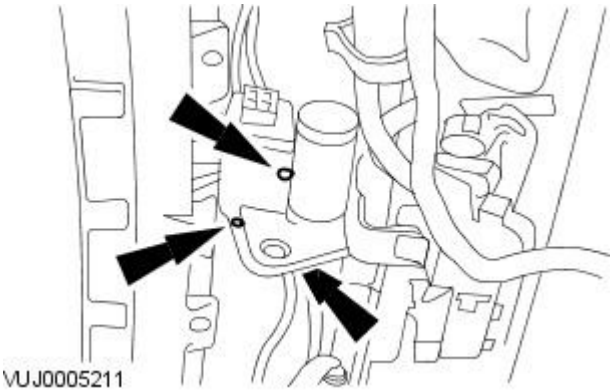


**8.** Install the roof opening panel motor.

- Tighten to 3 Nm.

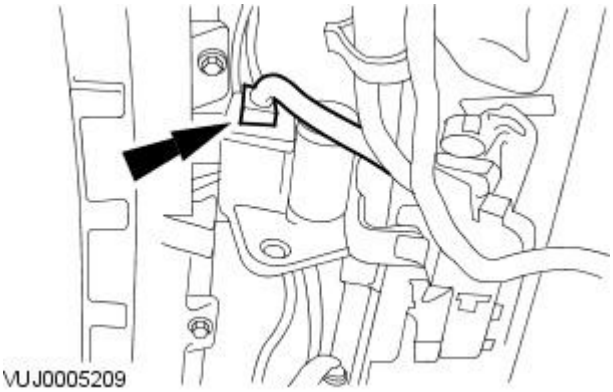


**9.** Connect the electrical connector

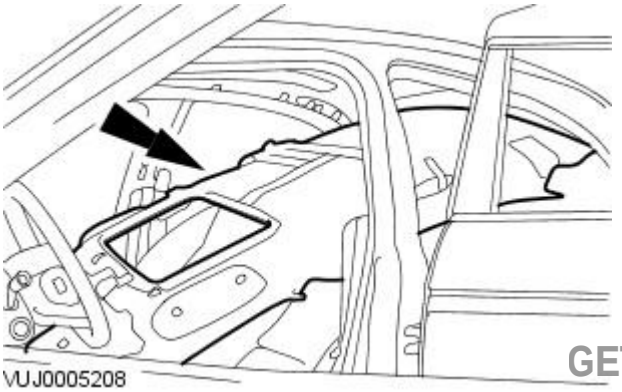


**10.** Install the headliner.

GETtheMANUALS.org

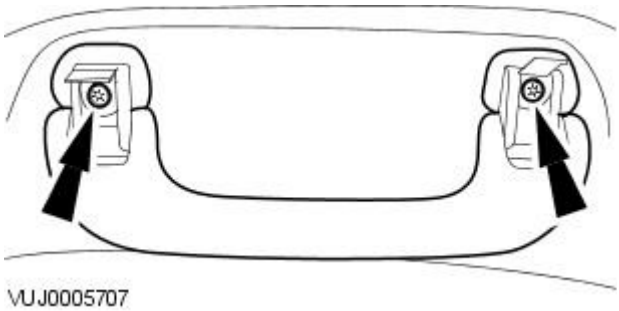

VUJ0005707

**11.** NOTE: Left-hand shown, right-hand similar.

Install the front passenger assist handle.

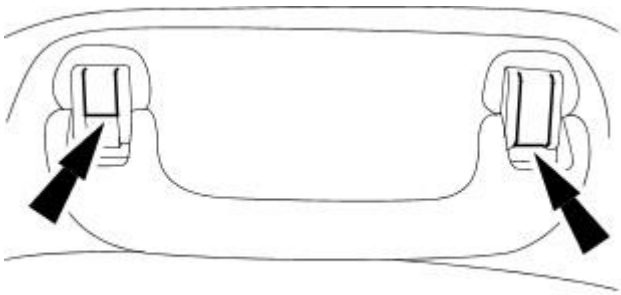

VUJ0005706

**12.** NOTE: Left-hand shown, right-hand similar.

Install the front passenger assist handle retaining screw covers.

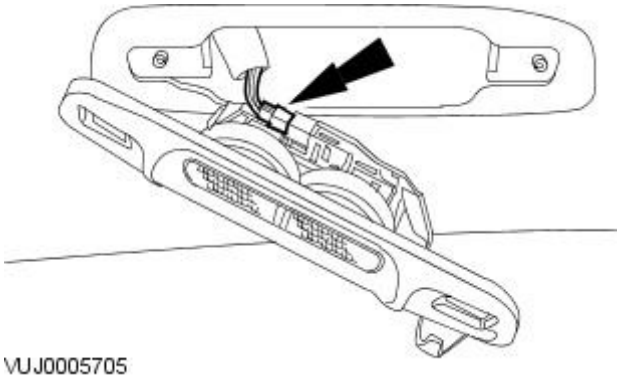

VUJ0005705

**13.** NOTE: Left-hand shown, right-hand similar.

Install the rear passenger assist handle.

- Connect the electrical connector.

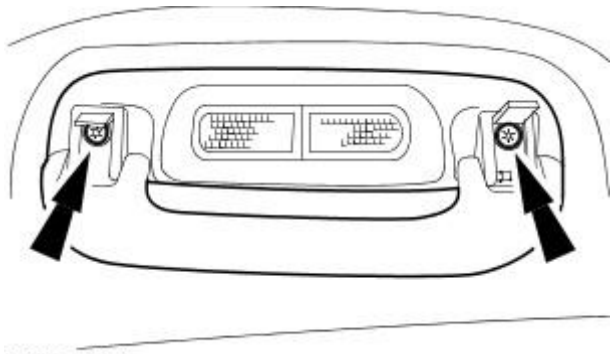

VUJ0005704

**14.** NOTE: Left-hand shown, right-hand similar.

Install the rear passenger assist handle retaining screws.

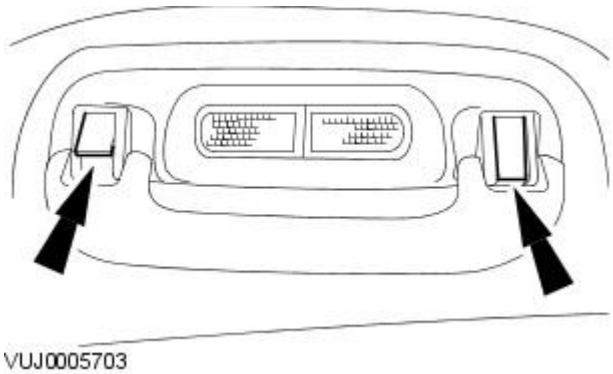

VUJ0005703

**15.** NOTE: Left-hand shown, right-hand similar.

Install the rear passenger assist handle retaining screw covers.

**16.** Install the overhead console.
For additional information, refer to Section 501-12 Instrument Panel and Console.

GETtheMANUALS.org

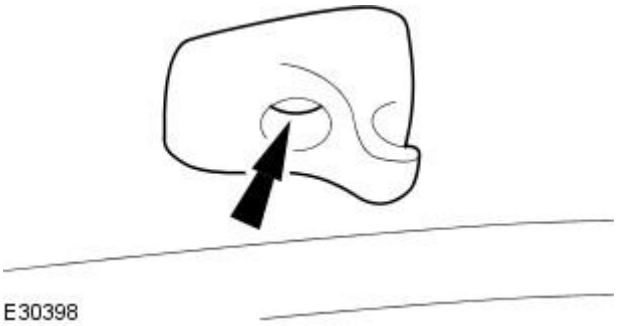


**17.** NOTE: Left-hand shown, right-hand similar.

Install the sun visor retaining clip.

**18.** Install both sun visors.
For additional information, refer to Section 501-05 Interior Trim and Ornamentation.

**19.** Install both C-pillar trims.
For additional information, refer to Section 501-05 Interior Trim and Ornamentation.

**20.** Install both B-pillar upper trim panels.
For additional information, refer to Section 501-05 Interior Trim and Ornamentation.

**21.** Install both A-pillar trim panels.
For additional information, refer to Section 501-05 Interior Trim and Ornamentation.

**22.** Install the roof opening panel shield.
For additional information, refer to Roof Opening Panel Shield in this section.

GETtheMANUALS.org

# Roof Opening Panel - Roof Opening Panel Front Drain Hose

Removal and Installation

## Removal

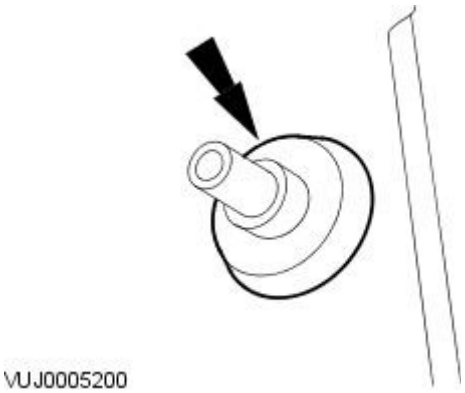

VUJ0005200

1. Remove the fender splash shield.
   For additional information, refer to Section 501-02 Front End Body Panels.
2. Remove the roof opening panel front drain hose.
3. Remove both A-pillar trim panels.
   For additional information, refer to Section 501-05 Interior Trim and Ornamentation.
4. Remove both B-pillar upper trim panels.
   For additional information, refer to Section 501-05 Interior Trim and Ornamentation.
5. Remove both C-pillar trims.
   For additional information, refer to Section 501-05 Interior Trim and Ornamentation.
6. Remove both sun visors.
   For additional information, refer to Section 501-05 Interior Trim and Ornamentation.
7. NOTE: Left-hand shown, right-hand similar.

   Remove the sun visor retaining clip.

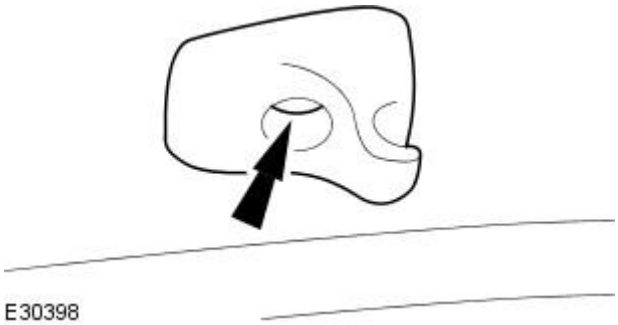

E30398

8. Remove the overhead console.
   For additional information, refer to Section 501-12 Instrument Panel and Console.
9. NOTE: Left-hand shown, right-hand similar.

   Detach the rear passenger assist handle retaining screw covers.

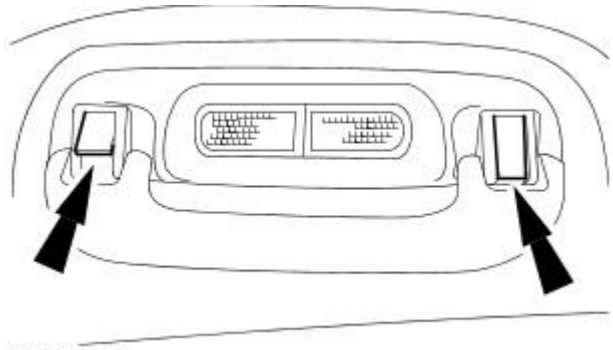

VUJ0005703

GETtheMANUALS.org

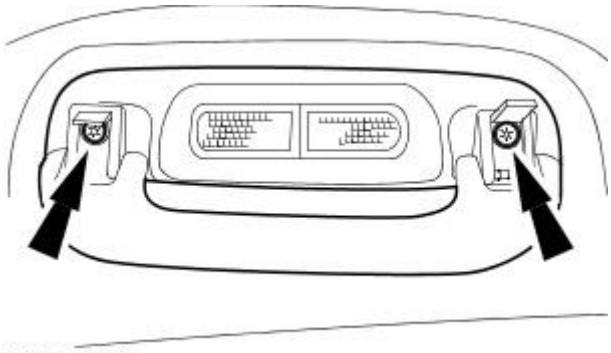

VUJ0005704

**10.** NOTE: Left-hand shown, right-hand similar.

Detach the rear passenger assist handle.

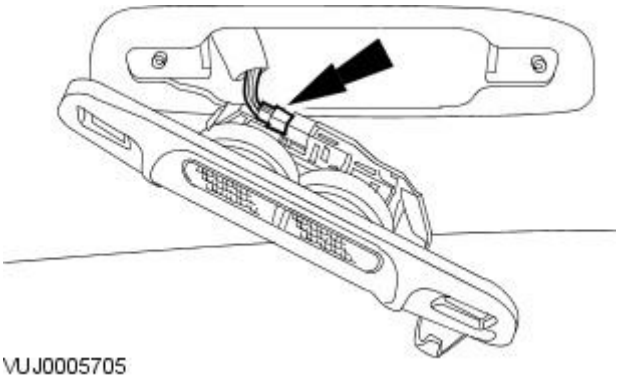

VUJ0005705

**11.** NOTE: Left-hand shown, right-hand similar.

Remove the rear passenger assist handle.

- Disconnect the electrical connector.

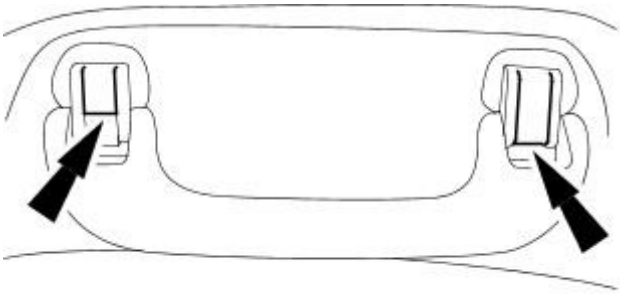

VUJ0005706

**12.** NOTE: Left-hand shown, right-hand similar.

Detach the front passenger assist handle retaining screw covers.

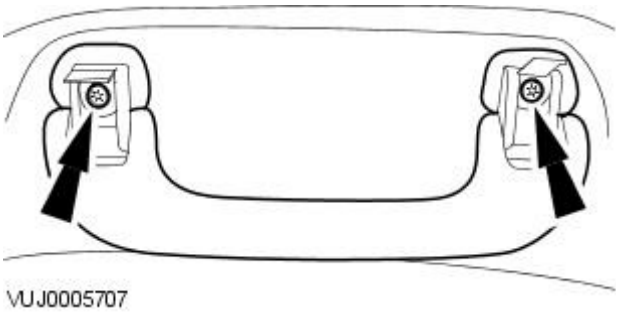

VUJ0005707

**13.** NOTE: Left-hand shown, right-hand similar.

Remove the front passenger assist handle.

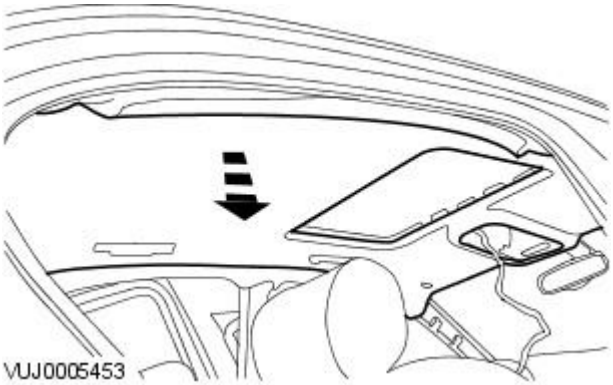

VUJ0005453

**14.** Detach the headliner.

GETtheMANUALS.org

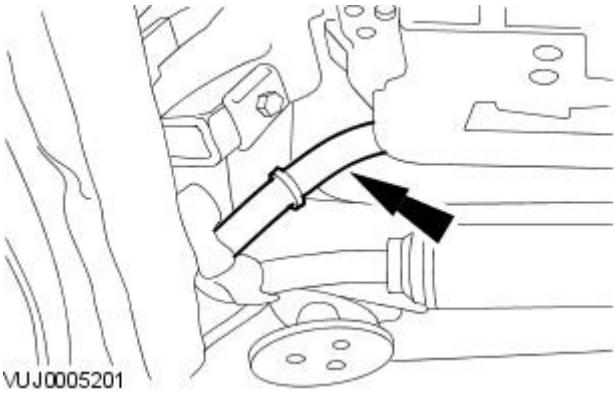


**15.** Detach the roof opening panel front drain hose.

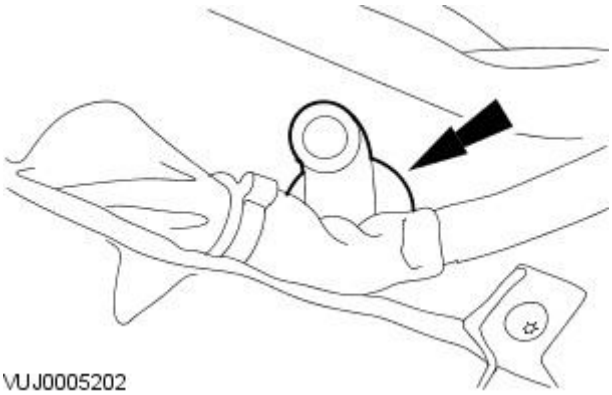


**16.** Remove the roof opening panel front drain hose.

## Installation

**1.** To install, reverse the removal procedure.

GETtheMANUALS.org

# Roof Opening Panel - Roof Opening Panel Glass

Removal and Installation

## Removal

Short wheelbase

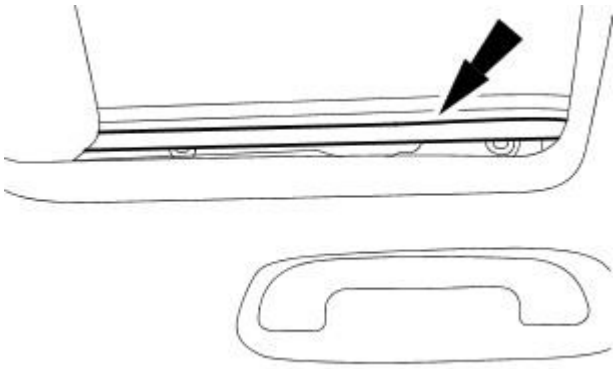

E30349

**1.** NOTE: Make sure the roof opening glass assembly is in the closed position.

- NOTE: Left-hand shown, right-hand similar.

Detach the sight shield at the front of the roof and swing inwards towards the rear of vehicle.

Long wheelbase

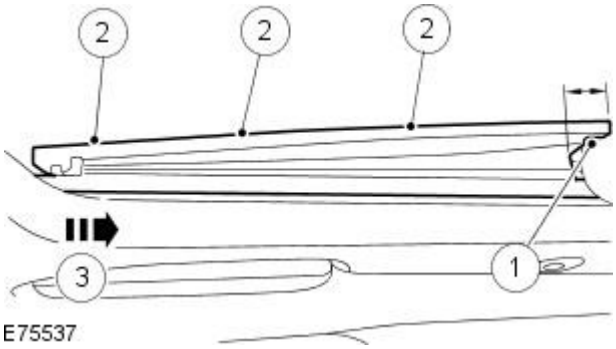


E75537

**2.** CAUTIONS:

Make sure the air deflector is only detached from the roof opening panel using the 20mm (0.78 inches) area at the end of the air deflector as defined in step 1 of the ilustration and text below. Failure to follow this instruction will result in damage to the component.

Do not pull on the air deflector rubber pleat. Failure to follow this instruction will result in damage to the component.

- NOTE: Right-hand shown, left-hand similar.

Detach the air deflector.

1. Detach the rear of the air deflector.
2. Detach the air deflector upper retainer.
3. Swing the front of the air deflector inwards towards the rear of the vehicle.

All vehicles

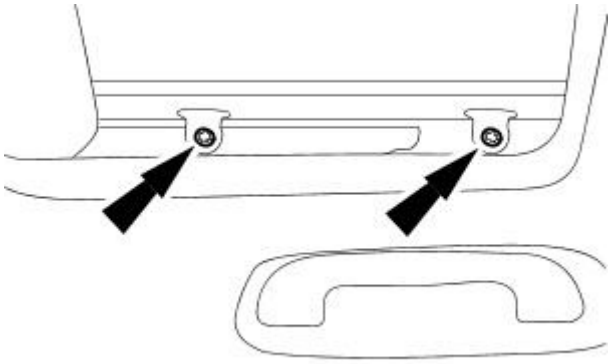

E30350

**3.** NOTE: Left-hand shown, right-hand similar.

Remove the roof opening panel glass retaining screws.

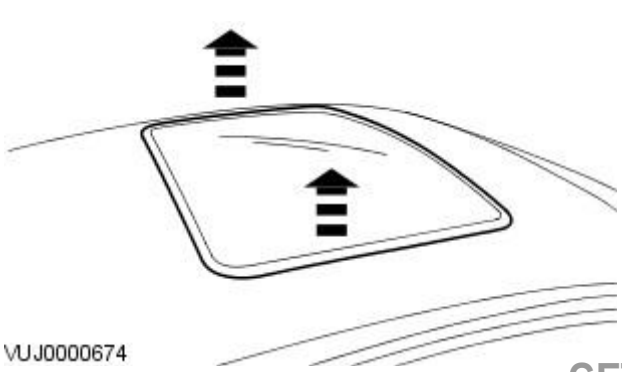

VUJ0000674

**4.** CAUTION: Do not operate the roof opening panel when the roof opening glass is removed.

Remove the roof opening panel glass.

GETtheMANUALS.org

## Installation

All vehicles

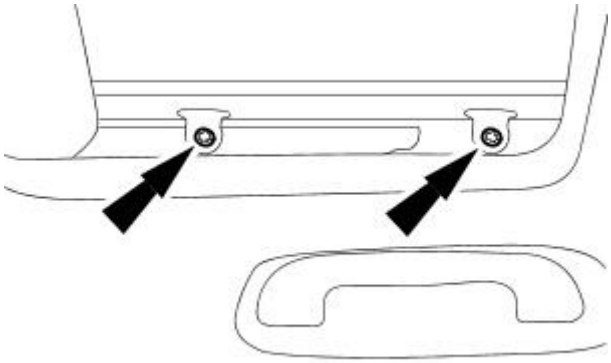


**1.** To install, reverse the removal procedure.

- Tighten to 4 Nm.

Long wheelbase

**2.** NOTE: Right-hand shown, left-hand similar.

Reposition the air deflector to the roof opening panel runner.

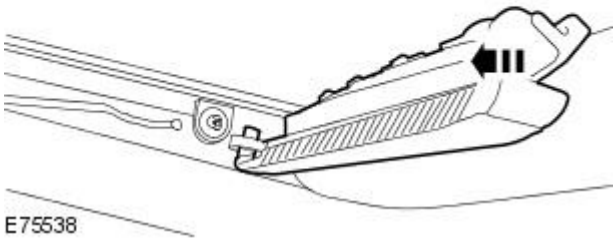


**3.** NOTE: Right-hand shown, left-hand similar.

Install the air deflector.

1. Make sure the air deflector is fully seated to the rear retaining clip.
2. Attach the air deflector upper retainer.

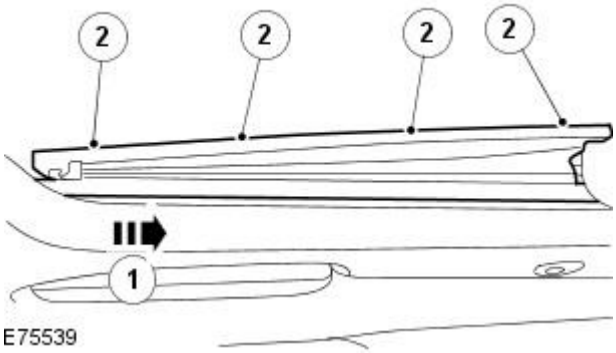


Short wheelbase

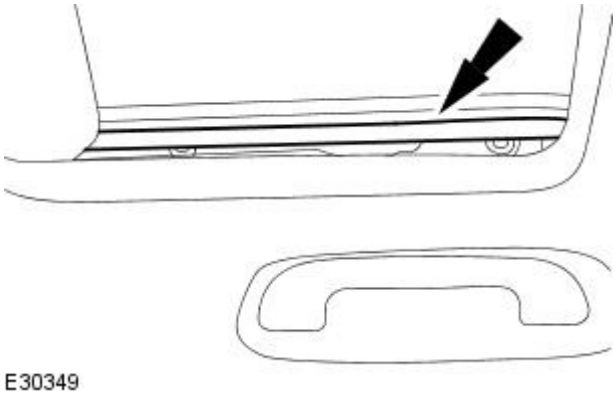


**4.** NOTE: Left-hand shown, right-hand similar.

Install the sight shields.

All vehicles

**5.** Align the roof opening panel glass.
For additional information, refer to: Roof Opening Panel Glass (501-17 Roof Opening Panel, Removal and Installation).

GETtheMANUALS.org

# Roof Opening Panel - Roof Opening Panel Motor

Removal and Installation

## Removal

1. NOTE: Make sure the roof opening panel is in the closed position.

   Remove the overhead console.
   For additional information, refer to Section 501-12 Instrument Panel and Console.

2. Detach the roof open panel motor.

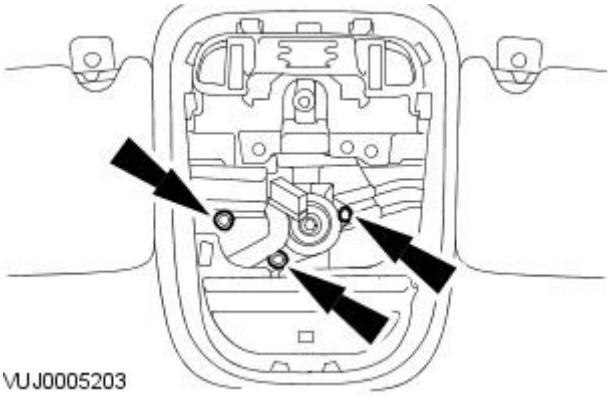


3. Remove the roof opening panel motor.

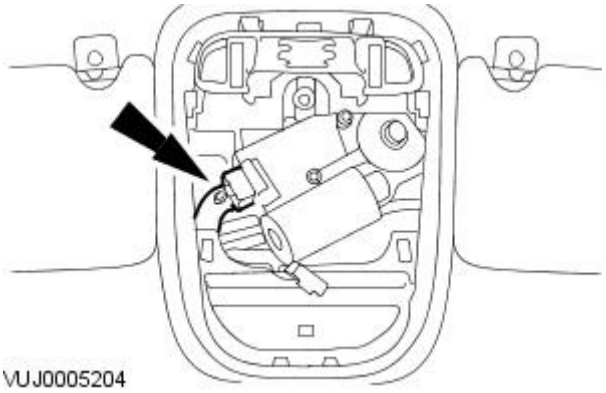


## Installation

1. To install, reverse the removal procedure.
   - Tighten to 3 Nm.

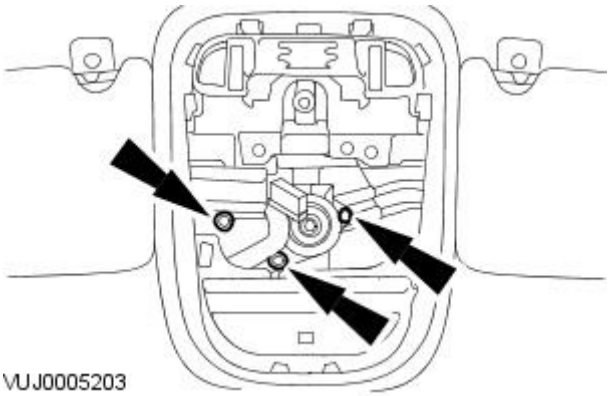


GETtheMANUALS.org

# Roof Opening Panel - Roof Opening Panel Rear Drain Hose

Removal and Installation

## Removal

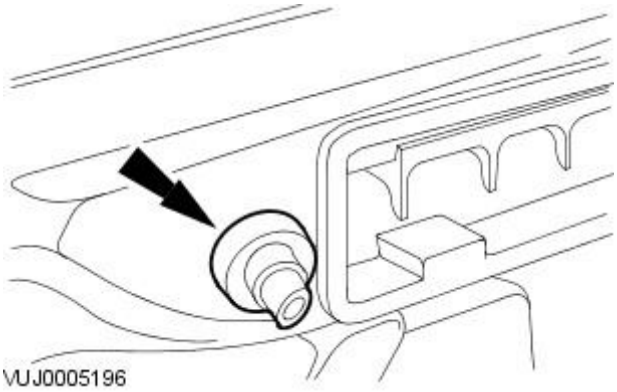


1. Remove the rear bumper cover.
   For additional information, refer to Section 501-19 Bumpers.
2. Remove the roof opening rear drain hose grommet.

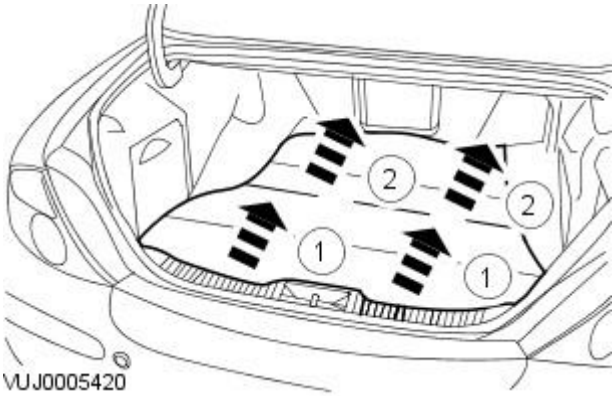


3. Reposition the luggage compartment floor covering.
   1. Detach the luggage compartment floor covering.
   2. Reposition the luggage compartment floor covering.

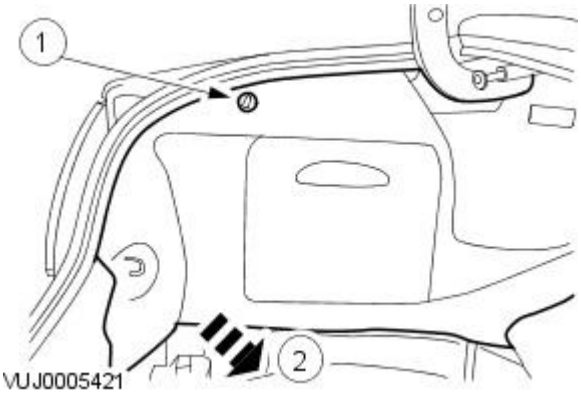


4. Detach the luggage compartment side trim panel.
   1. Remove the luggage compartment side trim panel retaining clip.
   2. Detach the luggage compartment side trim panel.

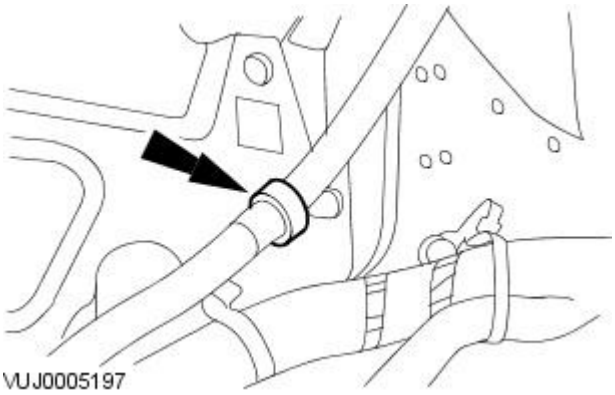


5. Detach the roof opening panel rear drain hose retaining clip.
6. Remove the parcel shelf.
   For additional information, refer to Section 501-05 Interior Trim and Ornamentation.
7. Remove both A-pillar trim panels.
   For additional information, refer to Section 501-05 Interior Trim and Ornamentation.
8. Remove both B-pillar upper trim panels.
   For additional information, refer to Section 501-05 Interior Trim and

GETtheMANUALS.org

Ornamentation.

**9.** Remove both sun visors.
For additional information, refer to Section 501-05 Interior Trim and Ornamentation.

**10.** NOTE: Left-hand shown, right-hand similar.

Remove the sun visor retaining clip.

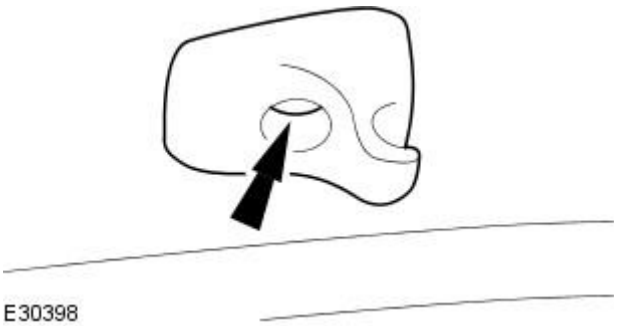

E30398

**11.** Remove the overhead console.
For additional information, refer to Section 501-12 Instrument Panel and Console.

**12.** NOTE: Left-hand shown, right-hand similar.

Detach the rear passenger assist handle retaining screw covers.

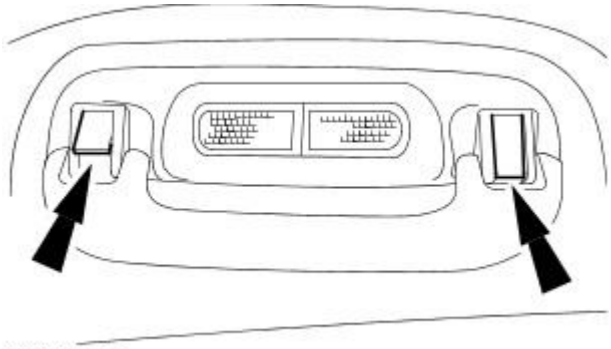

VUJ0005703

**13.** NOTE: Left-hand shown, right-hand similar.

Detach the rear passenger assist handle.

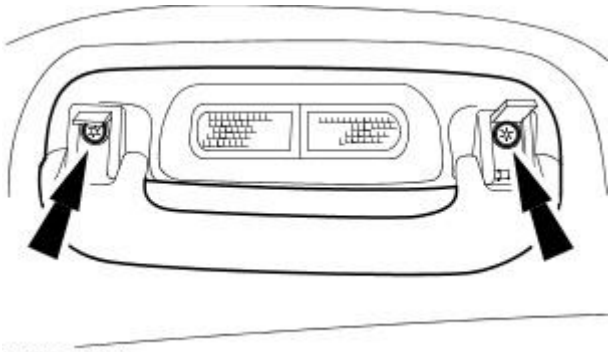

VUJ0005704

**14.** NOTE: Left-hand shown, right-hand similar.

Remove the rear passenger assist handle.

- Disconnect the electrical connector.

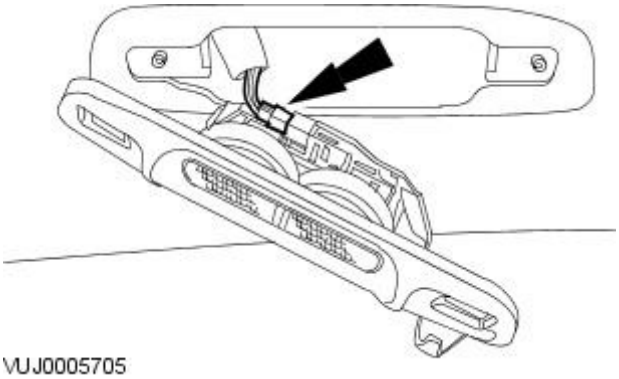

VUJ0005705

**15.** NOTE: Left-hand shown, right-hand similar.

Detach the front passenger assist handle retaining screw covers.

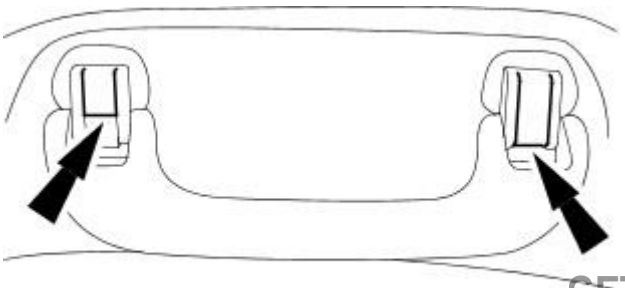

VUJ0005706

GETtheMANUALS.org

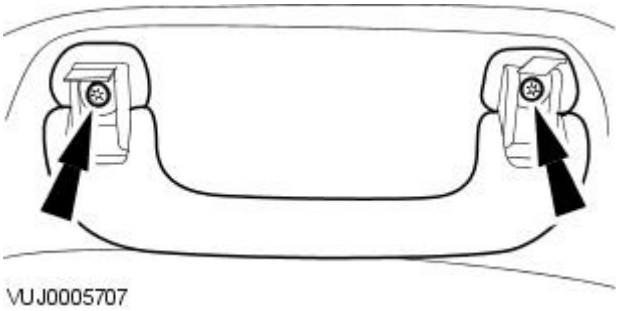


**16.** NOTE: Left-hand shown, right-hand similar.

Remove the front passenger assist handle.

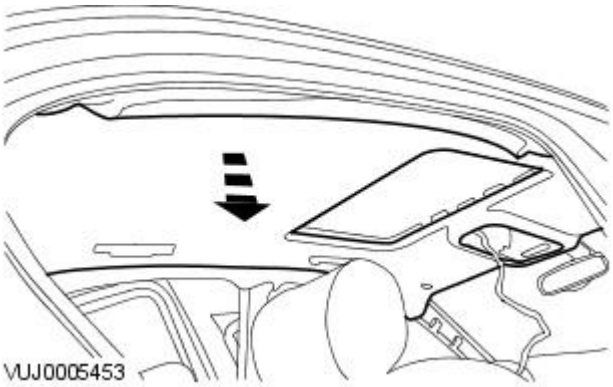


**17.** Detach the headliner.

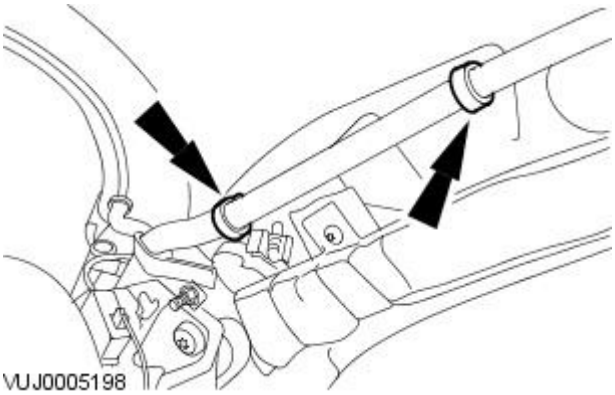


**18.** Detach the roof opening panel rear drain hose retaining clips.

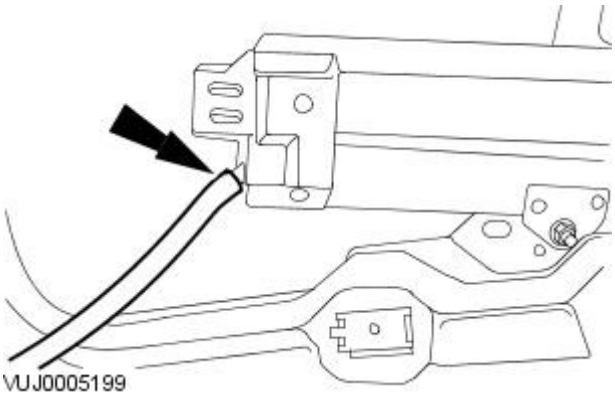


**19.** Remove the roof opening panel rear drain hose.

## Installation

**1.** To install, reverse the removal procedure.

GETtheMANUALS.org

# Roof Opening Panel - Roof Opening Panel Shield

Removal and Installation

## Removal

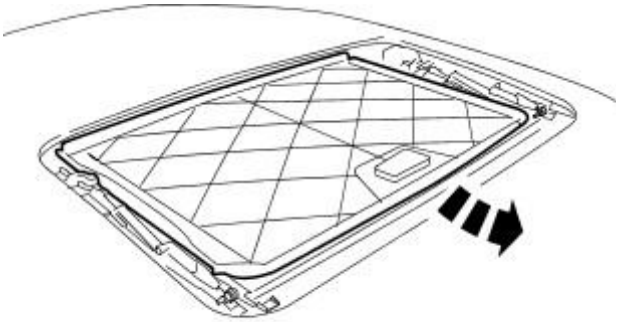

VUJ0000675

1. Remove the trough assembly.
   For additional information, refer to Trough Assembly in this section.
2. Remove the roof opening panel shield.

## Installation

1. CAUTION: Make sure the roof opening panel shield lining is not damaged on installation.

   To install, reverse the removal procedure.

GETtheMANUALS.org

# Roof Opening Panel - Roof Opening Panel Weatherstrip

Removal and Installation

## Removal

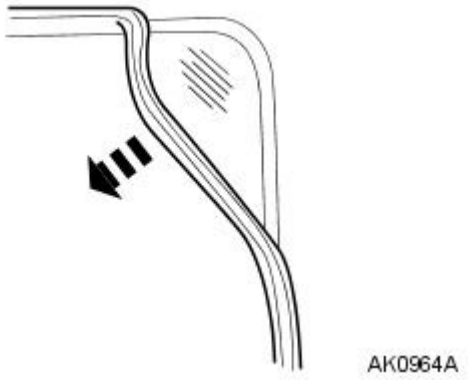


**1.** CAUTION: Do not operate the roof opening panel when the roof opening panel glass is removed.

Remove the roof opening panel glass. For additional information, refer to: Roof Opening Panel Glass (501-17 Roof Opening Panel, Removal and Installation).

**2.** Remove the roof opening panel weatherstrip.

## Installation

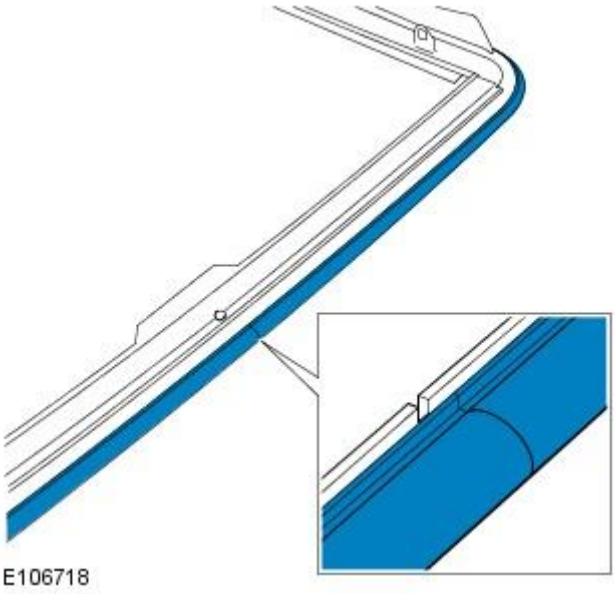


**1.** NOTE: Make sure that this component is installed to the noted removal position.

To install, reverse the removal procedure.

- Position the roof opening glass seal seam in the center of the rear facing side of the roof opening panel glass.

GETtheMANUALS.org

# Roof Opening Panel - Trough Assembly

Removal and Installation

## Removal

**1.** CAUTION: Do not operate the roof opening panel when the roof opening glass is removed.

Remove the roof opening panel glass.
For additional information, refer to Roof Opening Panel Glass in this section.

**2.** NOTE: Right-shown, left-hand similar.

Remove the trough retaining screws.

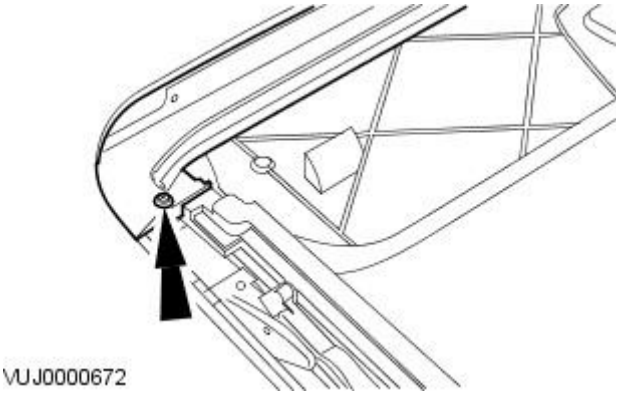


**3.** Remove the trough assembly.

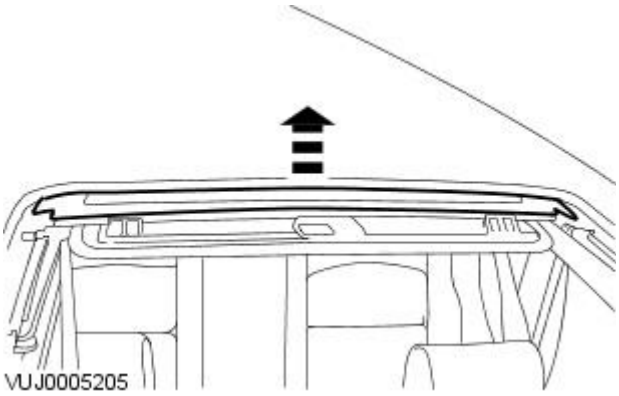


## Installation

**1.** CAUTION: Do not overtighten the trough assembly screws.

• NOTE: Make sure the trough assembly is correctly seated in the guide clip.

To install, reverse the removal procedure.

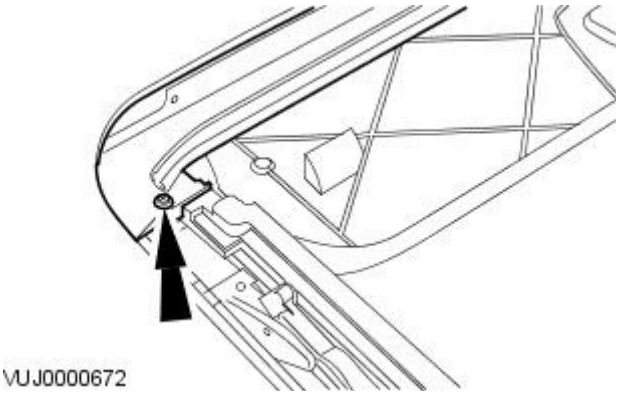


GETtheMANUALS.org

# Bumpers -

**Torque Specifications**

| Description | Nm | lb-ft | lb-in |
|---|---|---|---|
| Rear bumper retaining bolts | 18 | 13 | — |
| Front bumper cover retaining bolts | 7 | — | 62 |
| Rear bumper cover retaining bolts | 7 | — | 62 |

GETtheMANUALS.org

# Bumpers - Bumpers

Description and Operation

## Vehicles built up to 01/2004

### Front Bumper

The vehicle is fitted with a chassis mounted aluminium beam and is covered by a one piece color co-ordinated front bumper cover. The front bumper cover includes air management and brake cooling ducts. There is provision for fog lamps if fitted, which are mounted via brackets to the bumper covers. Inserts, side marker lamps/reflectors, and a color co-odinated splitter vane are fitted as standard. Telescopic headlamp washers are optional.

### Rear Bumper

The rear bumper is of aluminium construction and is covered by a one piece color co-ordinated rear bumper cover. Inserts and side marker lamps/reflectors are fitted as standard. The parking aid sensors are mounted in the bumper cover and are fitted if the vehicle is equipped with a parking aid system.

## Vehicles built 02/2004 onwards

### Front Bumper

The vehicle is fitted with a chassis mounted aluminium or steel beam and is covered by a one piece color co-ordinated front bumper cover. The front bumper cover includes air management and provision for fog lamps if fitted. The fog lamps are mounted directly to the bumper cover by three retaining screws per lamp. Inserts, side marker lamps/reflectors, fog lamp covers and a splitter vane are fitted as standard. Telescopic headlamp washers are optional. The parking aid sensors are mounted in the bumper cover and are fitted if the vehicle is equipped with a parking aid system.

### Rear Bumper

The rear bumper can be constructed from aluminium or steel and is covered by a one piece color co-ordinated rear bumper cover. Inserts and side marker lamps/reflectors are fitted as standard. The parking aid sensors are mounted in the bumper cover and are fitted if the vehicle is equipped with a parking aid system.

GETtheMANUALS.org

# Bumpers - Front Bumper Cover

Removal and Installation

## Removal

All vehicles

1. Remove the radiator splash shield.
   For additional information, refer to: Radiator Splash Shield (501-02 Front End Body Panels, Removal and Installation).

Vehicles built up to 01/2004

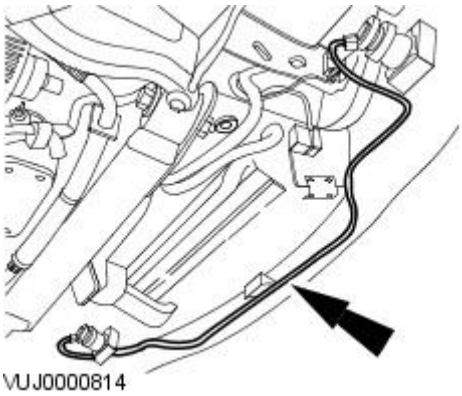


2. Disconnect the front fog lamp electrical connectors and detach the wiring harness.

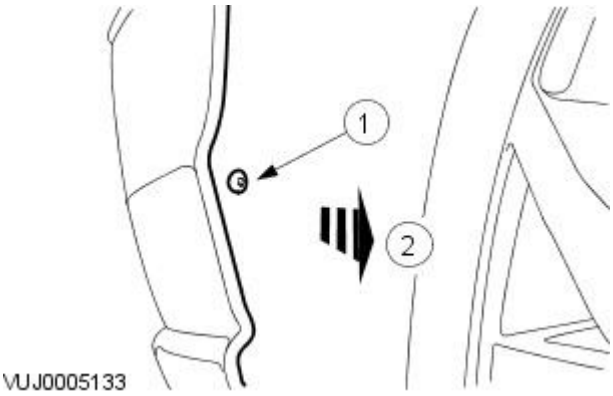


3. NOTE: Left-hand shown, right-hand similar.

   Detach the front fender splash shield.

   1. Remove the front fender splash shield retaining screw.
   2. Detach the front fender splash shield.

Vehicles built 02/2004 onwards

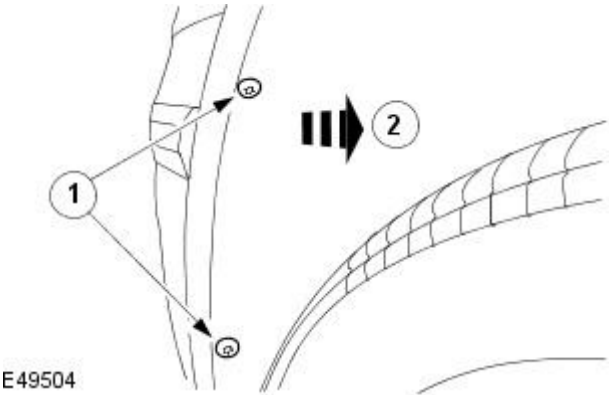


4. NOTE: Left-hand shown, right-hand similar.

   Detach the front fender splash shield.

   1. Remove the front fender splash shield retaining screw.
   2. Detach the front fender splash shield.

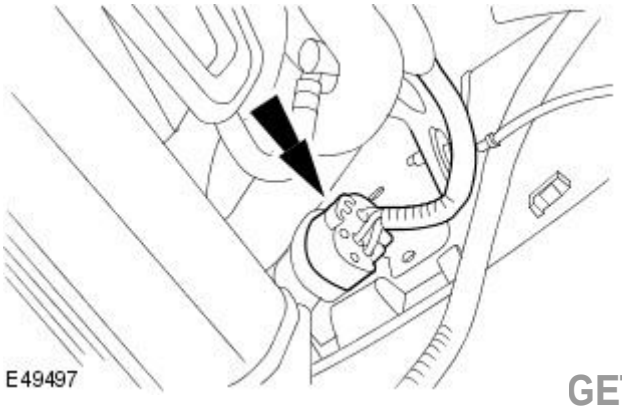


5. Disconnect the front bumper cover harness electrical connector.

GETtheMANUALS.org

All vehicles

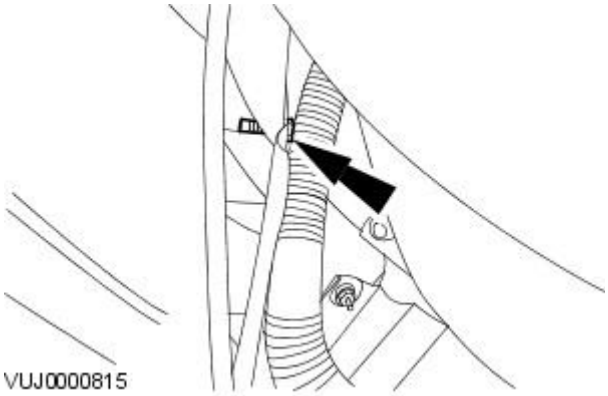


**6.** NOTE: Left-hand shown, right-hand similar.

Remove the left-hand front bumper cover retaining bolt.

**7.** Lower the vehicle.

Vehicles with headlamp washers

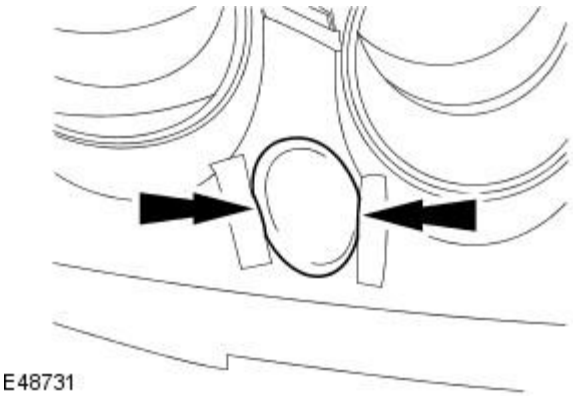


**8.** NOTE: Right-hand shown, left-hand similar.

Reposition the headlamp washer jet.

- Apply suitable tape to the bumper cover to prevent damage to the bumper cover.

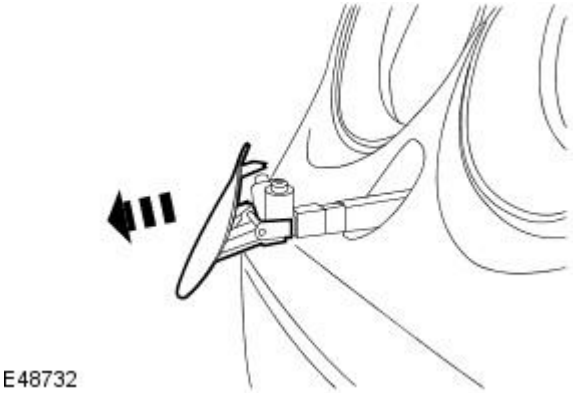


**9.** NOTE: Right-hand shown, left-hand similar.

Remove the headlamp washer jet trim.

All vehicles

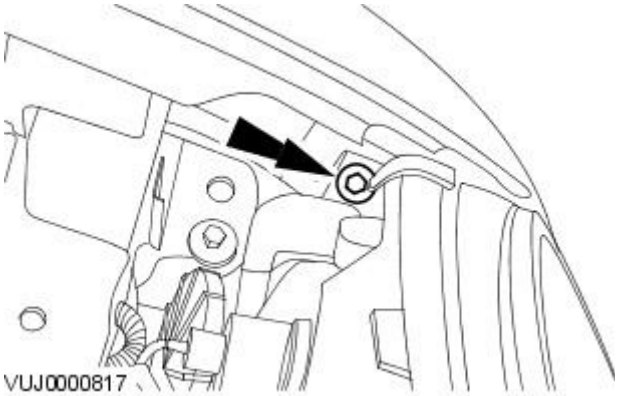


**10.** NOTE: Left-hand shown, right-hand similar.

Remove the bumper cover left retaining bolt.

GETtheMANUALS.org

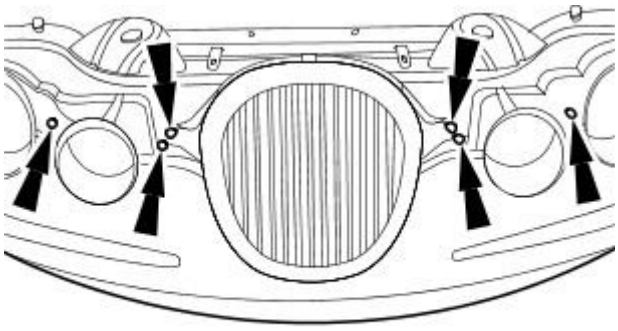

VUJ0000819

**11.** Remove the front bumper cover.

## Installation

Vehicles built up to 01/2004

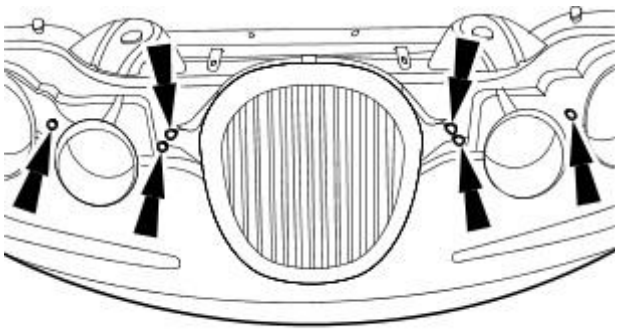

VUJ0000819

**1.** To install, reverse the removal procedure.

- Tighten to 7 Nm.

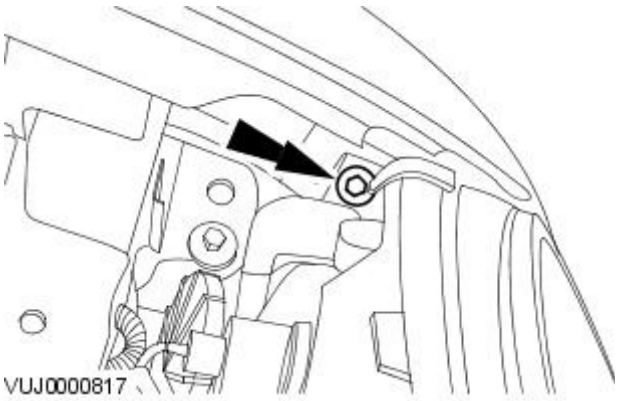

VUJ0000817

**2.** Tighten to 7 Nm.

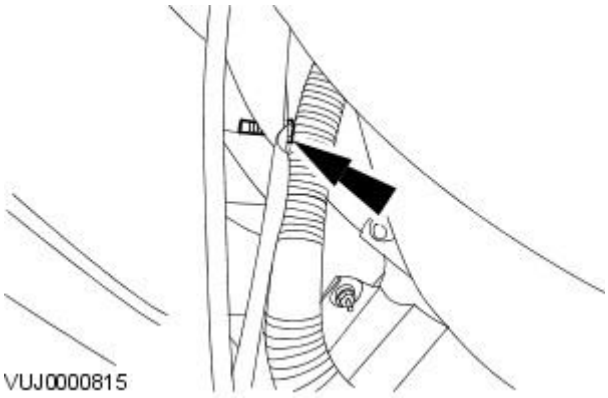

VUJ0000815

**3.** Tighten to 7 Nm.

Vehicles built 02/2004 onwards

GETtheMANUALS.org

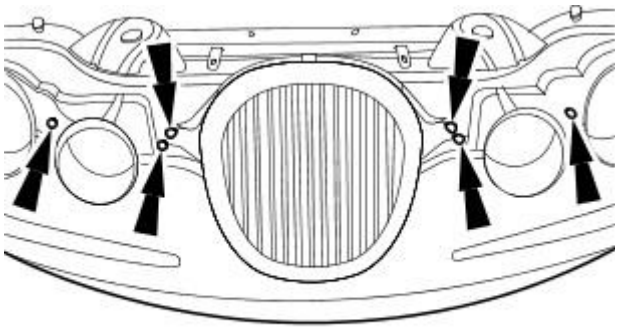

VUJ0000819

**4.** To install, reverse the removal procedure.

- Tighten to 5 Nm.

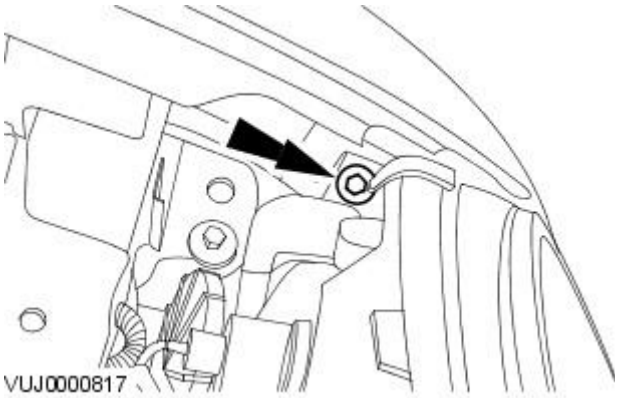

VUJ0000817

**5.** Tighten to 5 Nm.

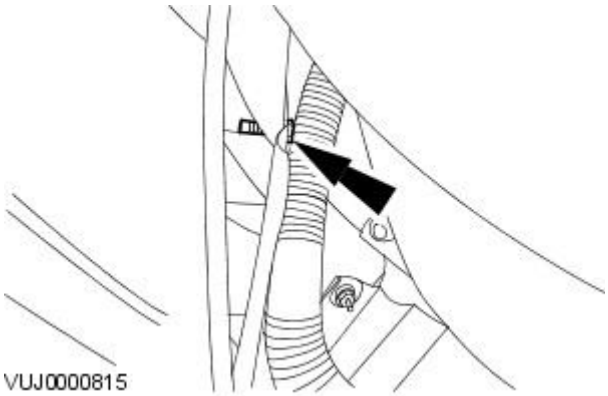

VUJ0000815

**6.** Tighten to 5 Nm.

GETtheMANUALS.org

# Bumpers - Front Bumper Cover InsertVehicles Built From: 02/2004

Removal and Installation

## Removal

1. Remove the front bumper cover.
   For additional information, refer to: Front Bumper Cover (501-19 Bumpers, Removal and Installation).
2. Disconnect the sidemarker lamp electrical connector (if equipped).

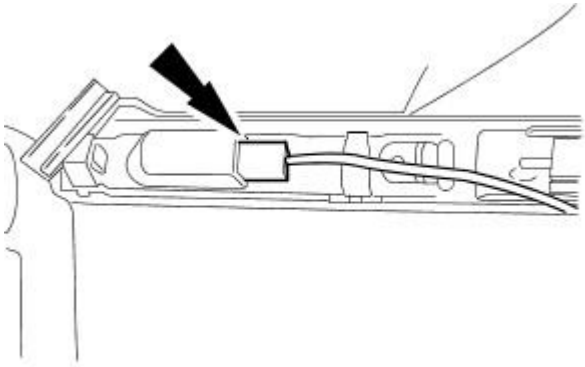

E48724

3. Remove the sidemarker lamp (if equipped).
   - Release the retaining tangs

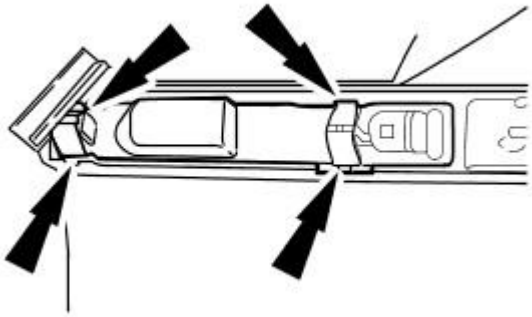

E48725

4. Remove the reflector.
   - Release the retaining tangs

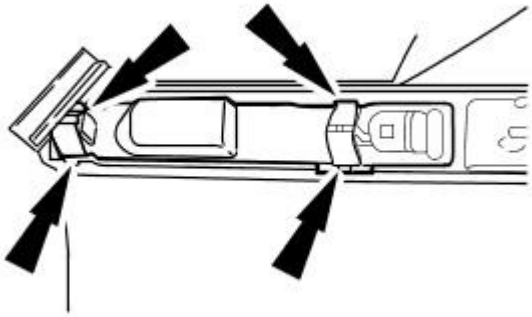

E48725

5. Detach the wiring harness.

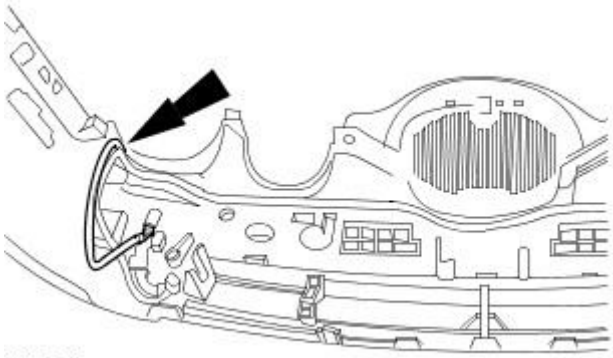

E49635

GETtheMANUALS.org

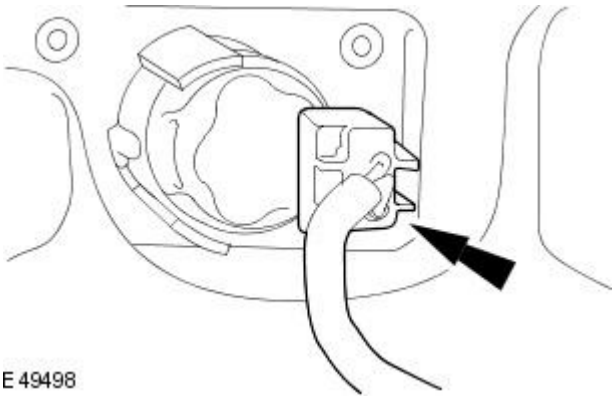

E49498

**6.** Disconnect the parking aid sensor electrical connector.

**7.** Remove the energy absorbing foam.

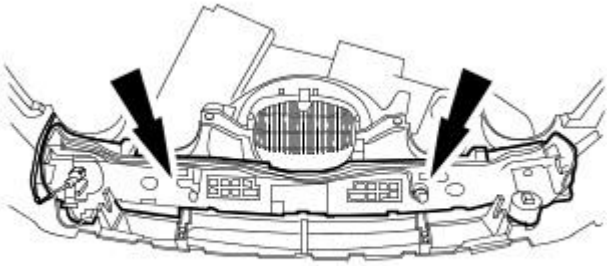

E48729

**8.** Remove the front bumper cover insert.

- Remove the retaining clips.

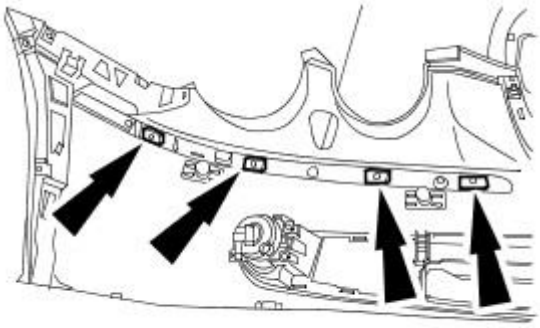

E48730

## Installation

**1.** To install, reverse the removal procedure.

GETtheMANUALS.org

# Bumpers - Front Bumper Cover InsertVehicles Built Up To: 01/2004

Removal and Installation

## Removal

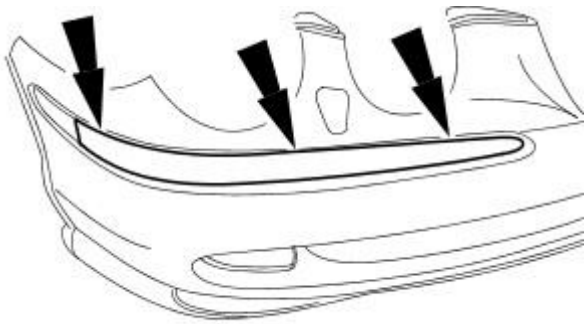

VUJ0001471

1. Remove the front bumper cover.
   For additional information, refer to Front Bumper Cover— in this section.
2. NOTE: Release the bumper cover insert clips on the inside of the bumper cover.

   Using a suitable tool to avoid damaging the paintwork, progressively ease the bumper cover insert away from the front bumper cover.

## Installation

1. To install, reverse the removal procedure.

GETtheMANUALS.org

# Bumpers - Rear Bumper

Removal and Installation

## Removal

1. Remove the rear bumper cover.
   For additional information, refer to Rear Bumper Cover— in this section.
2. NOTE: Left-hand shown, right-hand similar.

   Detach the exhaust hanger insulator.

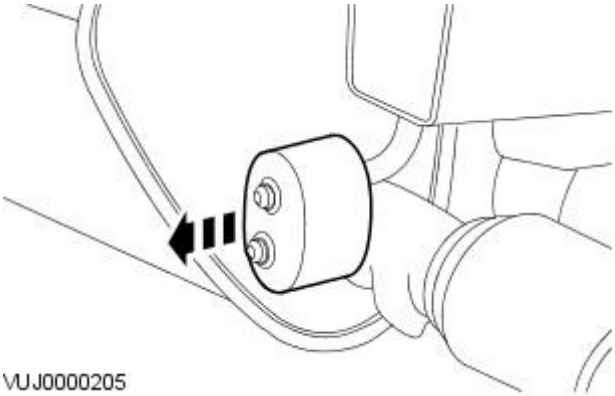


3. NOTE: Left-hand shown, right-hand similar.

   Remove the exhaust hanger.

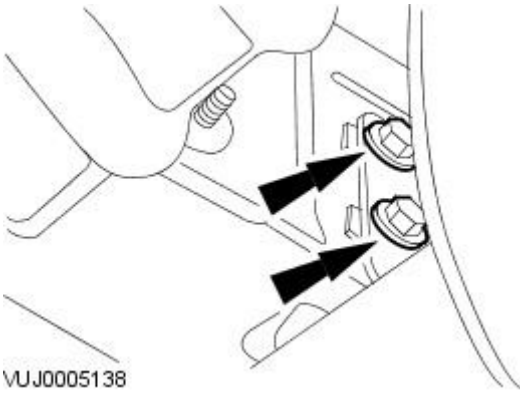


4. Remove the rear bumper.

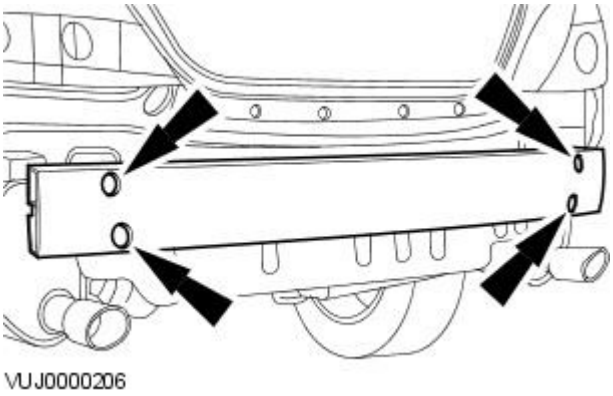


## Installation

1. To install, reverse the removal procedure.
   - Tighten to 18 Nm.

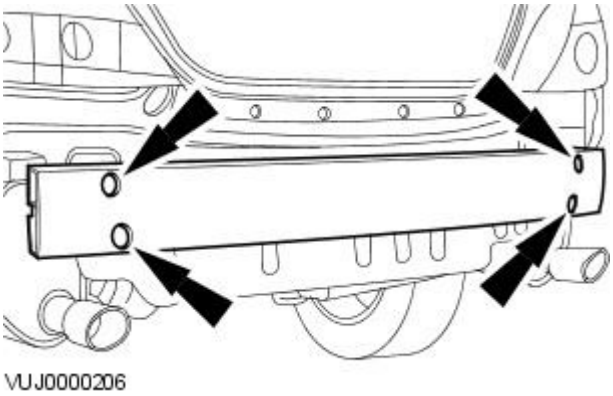


GETtheMANUALS.org

# Bumpers - Rear Bumper Cover

Removal and Installation

## Removal

All vehicles

1. Raise and support the vehicle.
   For additional information, refer to: Lifting (100-02 Jacking and Lifting, Description and Operation).

Vehicles built up to 01/2004

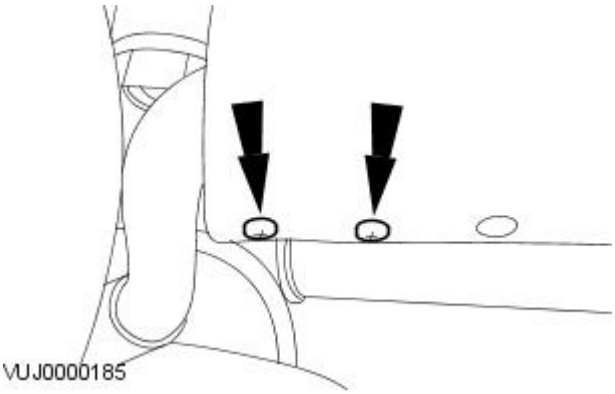


2. NOTE: Left-hand shown, right-hand similar.

   Remove the rear bumper cover lower retaining screws.

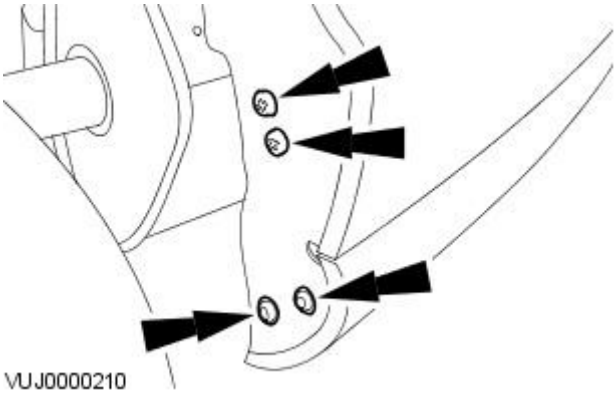


3. NOTE: Left-hand shown, right-hand similar.

   Remove the rear fender splash shield retaining screws.

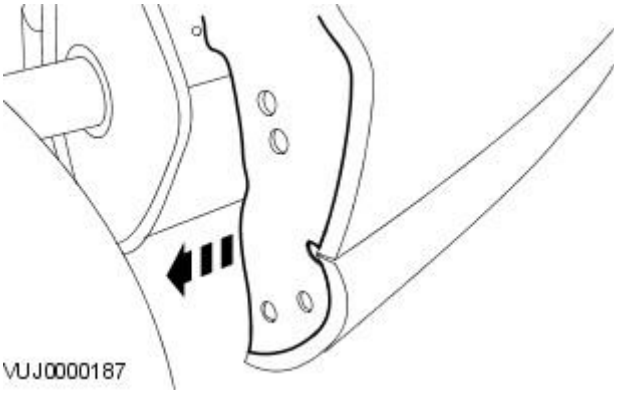


4. NOTE: Left-hand shown, right-hand similar.

   Detach the rear fender splash shield.

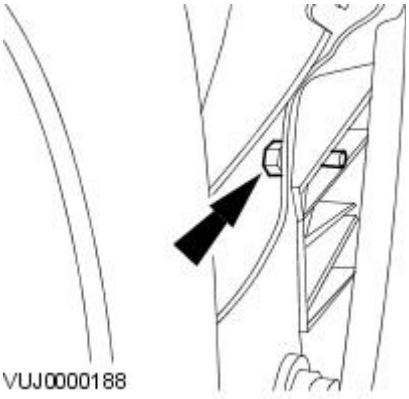


5. NOTE: Left-hand shown, right-hand similar.

   Remove the rear bumper cover retaining bolt.

Vehicles built 02/2004 onwards

GETtheMANUALS.org

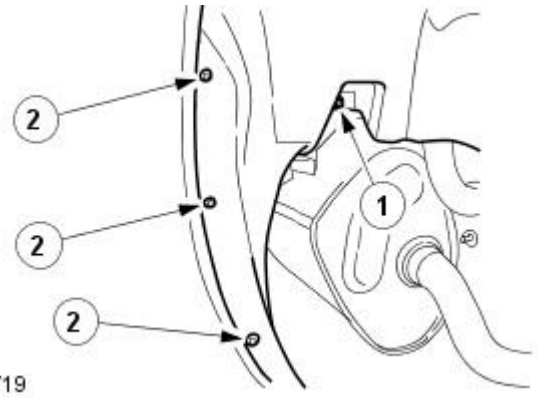

E48719

**6.** NOTE: Right-hand shown, left-hand similar.

Remove the rear fender splash shield retaining screws.

1. Remove the rear fender splash shield retaining nut.
2. Remove the rear fender splash shield retaining screws.

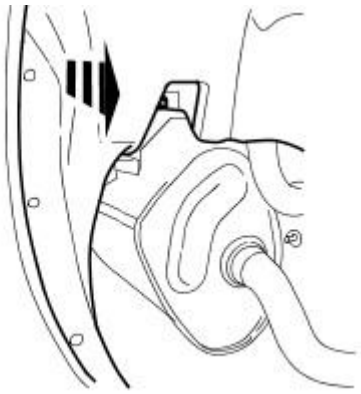
E49636

**7.** NOTE: Right-hand shown, left-hand similar.

Detach the rear fender splash shield.

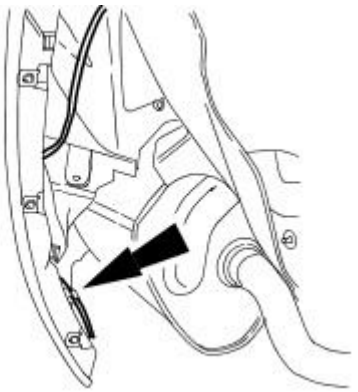
E48720

**8.** Detach the hose.

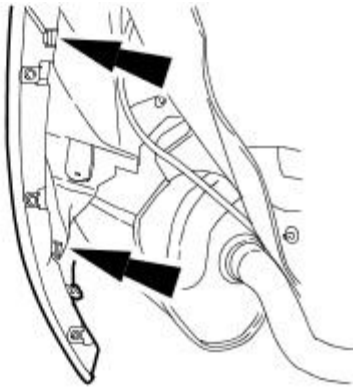
E48721

**9.** NOTE: Right-hand shown, left-hand similar.

Remove the rear bumper cover retaining bolts.

All vehicles

GETtheMANUALS.org

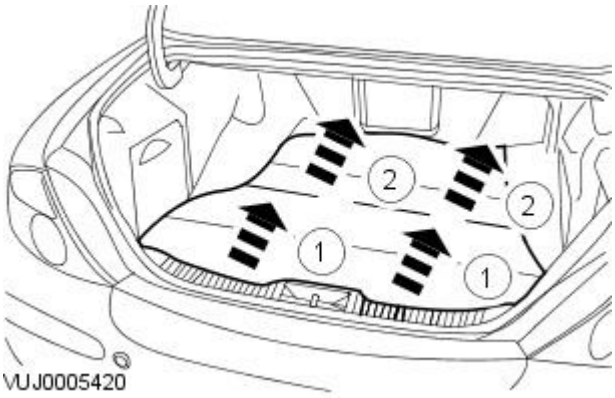


**10.** Reposition the luggage compartment floor covering.

1. Detach the luggage compartment floor covering.
2. Reposition the luggage compartment floor covering.

Vehicles built up to 01/2004

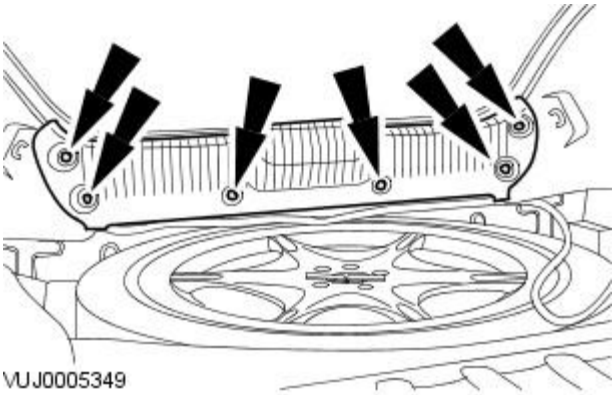


**11.** Remove the luggage compartment trim panel.

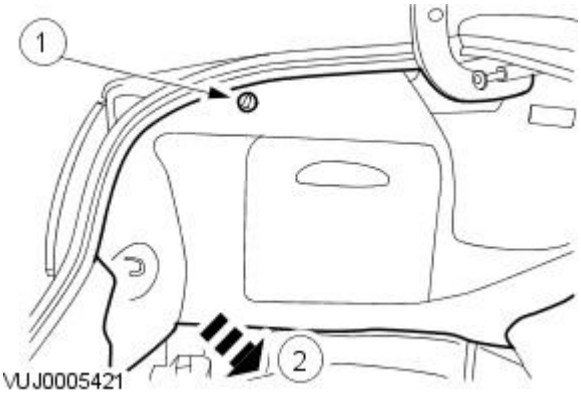


**12.** NOTE: Left-hand shown, right-hand similar.

Detach the luggage compartment side trim panel.

1. Remove the luggage compartment side trim panel retaining clip.
2. Detach the luggage compartment side trim panel.

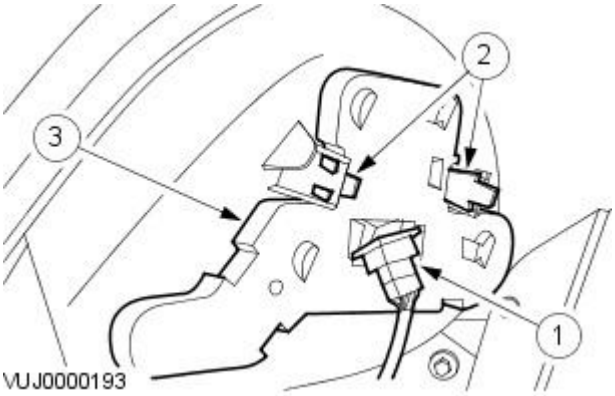


**13.** Remove the rear bulb holder assembly.

1. Disconnect the electrical connector.
2. Release the retaining tangs.
3. Remove the rear bulb holder assembly.

Vehicles built 02/2004 onwards

GETtheMANUALS.org

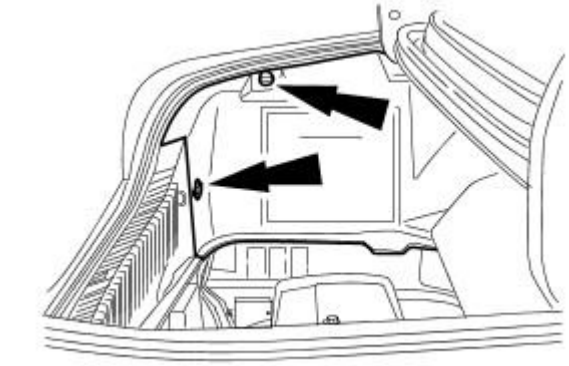

E48717

**14.** NOTE: Left-hand shown, right-hand similar.

Detach the luggage compartment side trim panel.

1. Remove the luggage compartment side trim panel retaining clip.
2. Detach the luggage compartment side trim panel.

**15.** Remove the luggage compartment trim panel.

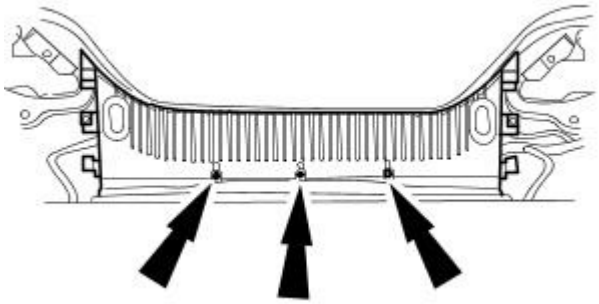

E48718

All vehicles

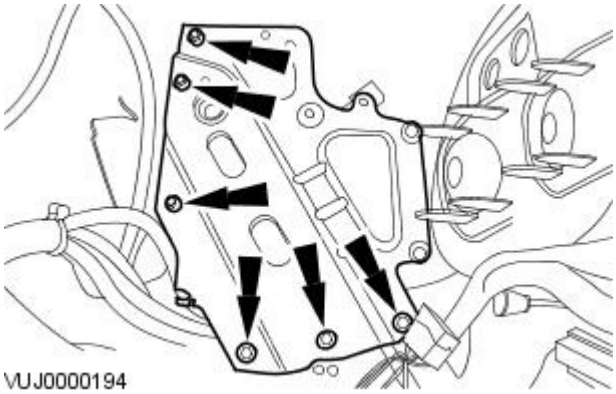

VUJ0000194

**16.** Detach the rear electronic module (REM) mounting bracket.

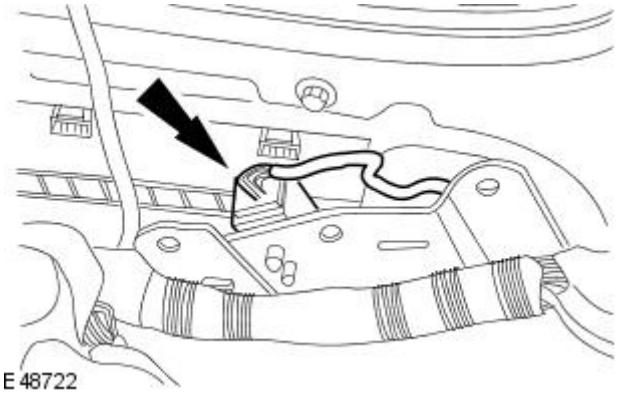

E48722

**17.** Disconnect the electrical connector.

GETtheMANUALS.org

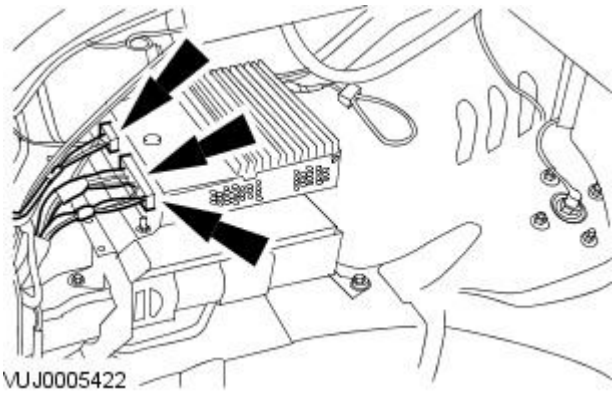


**18.** Disconnect the electrical connectors.

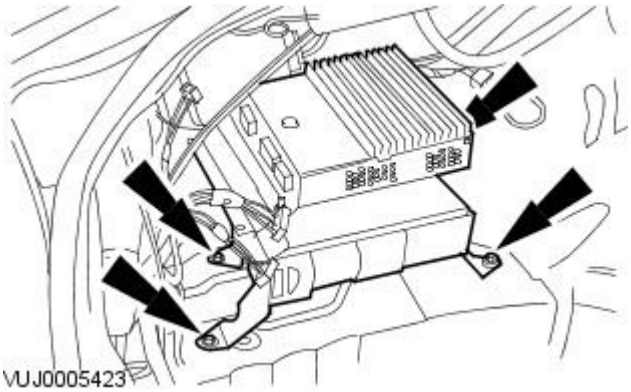


**19.** Detach the module mounting bracket.

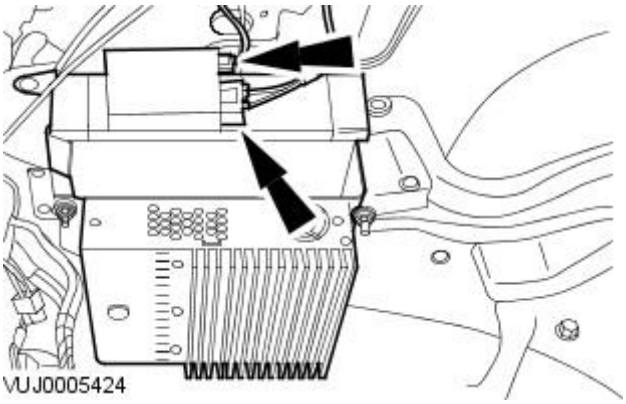


**20.** Remove the module mounting bracket.

- Disconnect the electrical connectors.

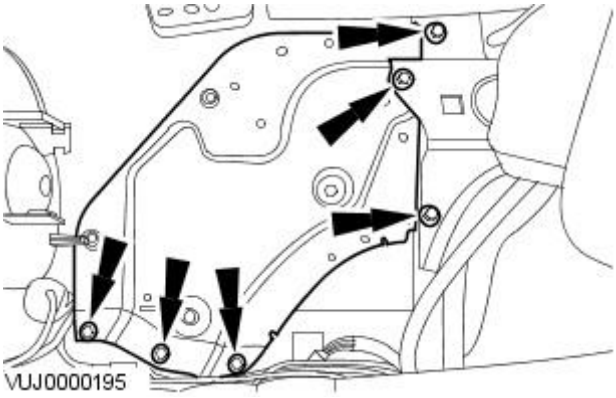


**21.** Detach the module mounting bracket.

Vehicles built up to 01/2004

GETtheMANUALS.org

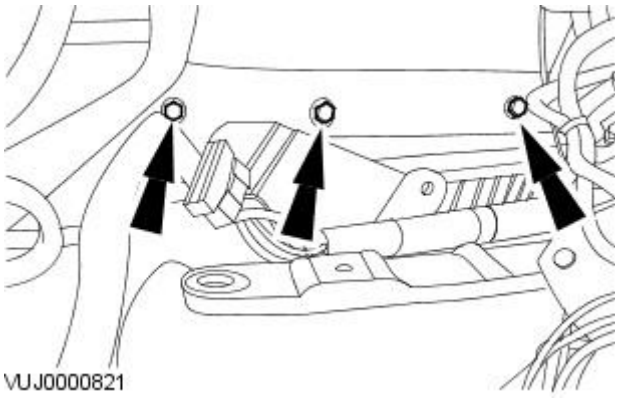


**22.** NOTE: Left-hand shown, right-hand similar.

Remove the rear bumper cover retaining bolts.

Vehicles built 02/2004 onwards

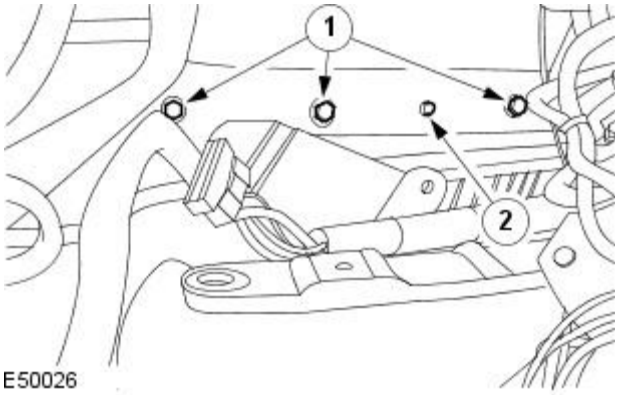


**23.** NOTE: Left-hand shown, right-hand similar.

Release the rear bumper cover alignment tang.

1. Remove the rear bumper cover retaining bolts.
2. Release the rear bumper cover alignment tang.

All vehicles

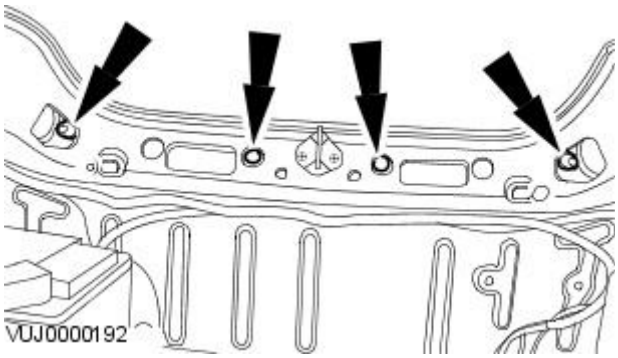


**24.** Remove the rear bumper cover retaining bolts.

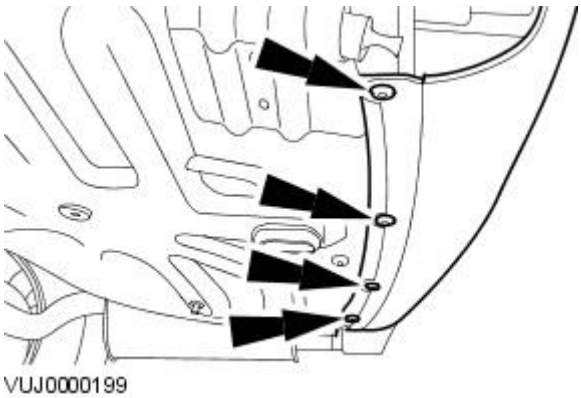


**25.** Detach the rear bumper cover.

GETtheMANUALS.org

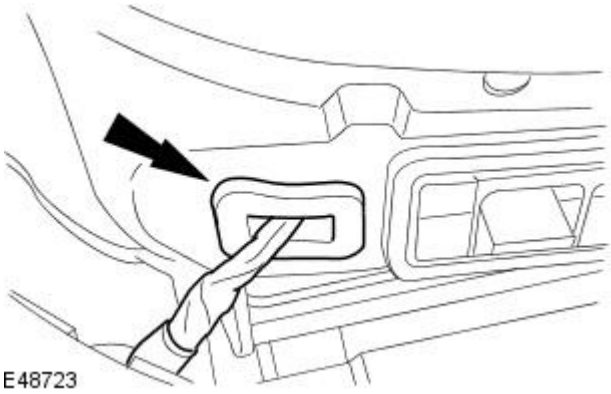


**26.** Remove the rear bumper cover.

- Detach the rear bumper cover wiring harness.

Vehicles built up to 01/2004

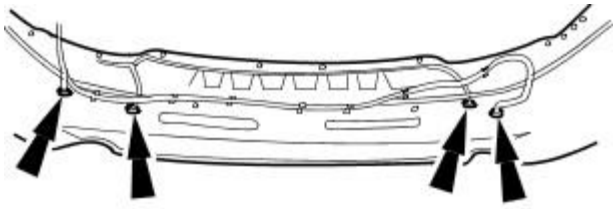


**27.** Disconnect the parking aid sensor electrical connectors (if equiped).

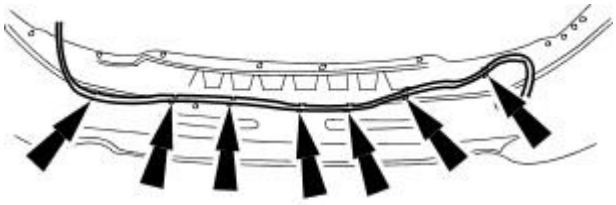


**28.** Detach the parking aid wiring harness from the rear bumper cover. (if equiped).

## Installation

Vehicles built up to 01/2004

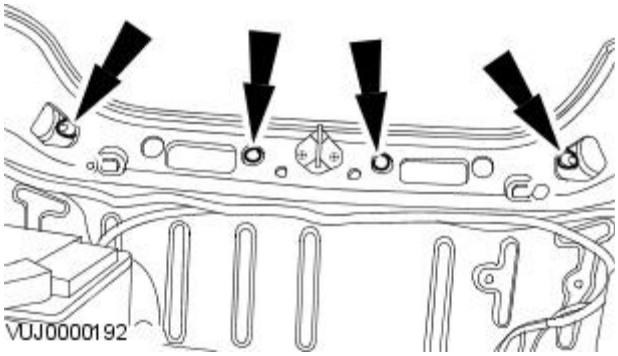


**1.** To install, reverse the removal procedure.

- Tighten to 7 Nm.

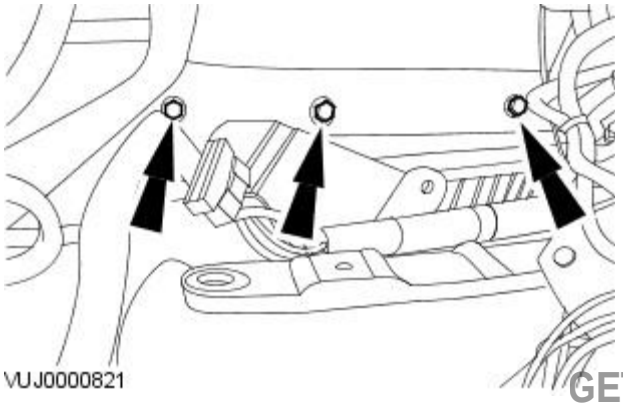


**2.** NOTE: Left-hand shown, right-hand similar.

Tighten to 7 Nm.

GETtheMANUALS.org

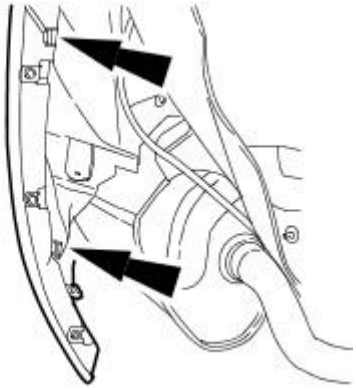


**3.** Tighten to 7 Nm.

Vehicles built 0/2004 onwards

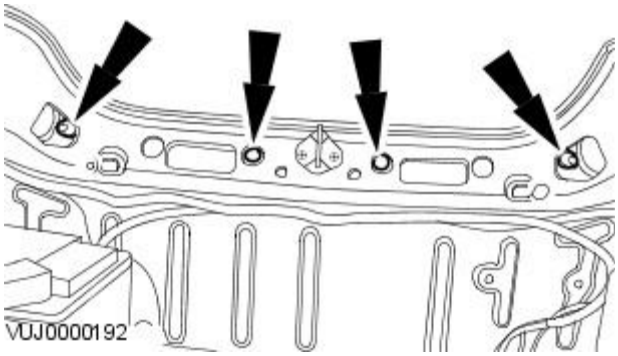


**4.** To install, reverse the removal procedure.

- Tighten to 5 Nm.

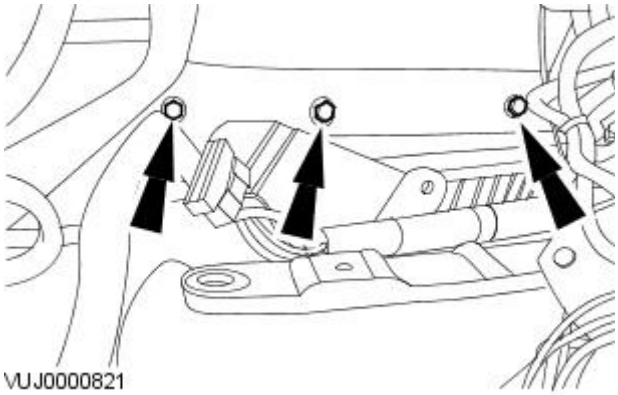


**5.** NOTE: Left-hand shown, right-hand similar.

Tighten to 5 Nm.

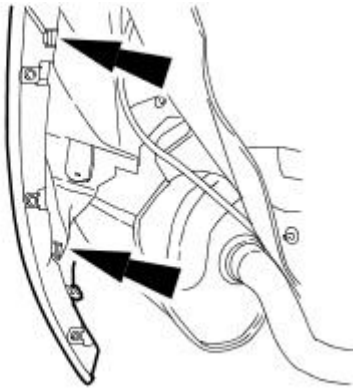


**6.** Tighten to 5 Nm.

GETtheMANUALS.org

# Bumpers - Rear Bumper Cover InsertVehicles Built From: 02/2004

Removal and Installation

## Removal

1. Remove the rear bumper cover.
   For additional information, refer to: Rear Bumper Cover (501-19 Bumpers, Removal and Installation).
2. Disconnect the sidemarker lamp electrical connector (if equipped).

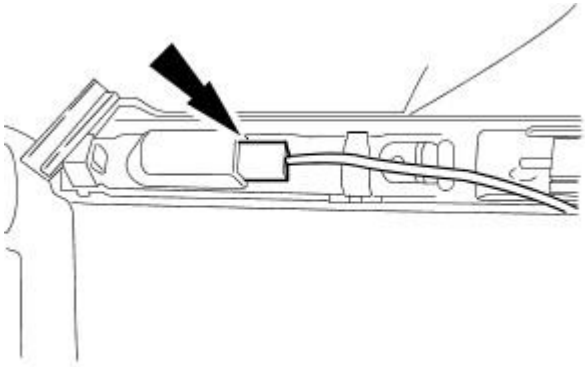

E48724

3. Remove the sidemarker lamp (if equipped).
   - Release the retaining tangs

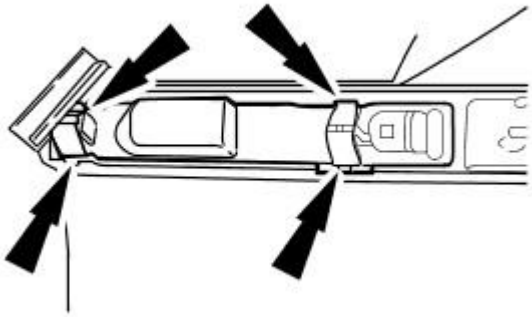

E48725

4. Remove the reflector.
   - Release the retaining tangs

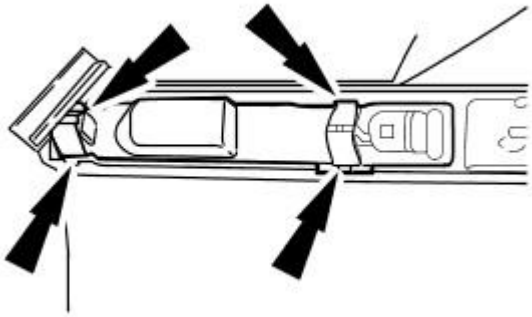

E48725

5. Detach the wiring harness.

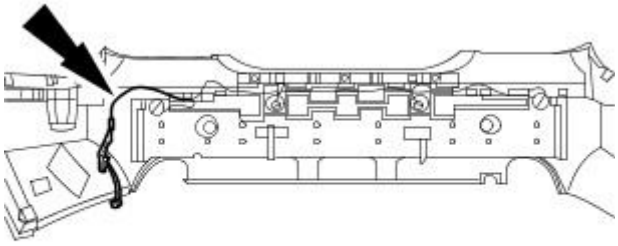

E48726

GETtheMANUALS.org

**6.** Disconnect the parking aid sensor electrical connector.

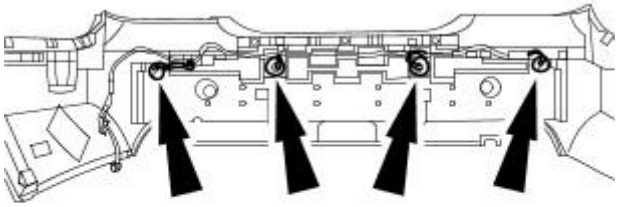

E 48727

**7.** Remove the energy absorbing foam.

- Release the retaining tangs.

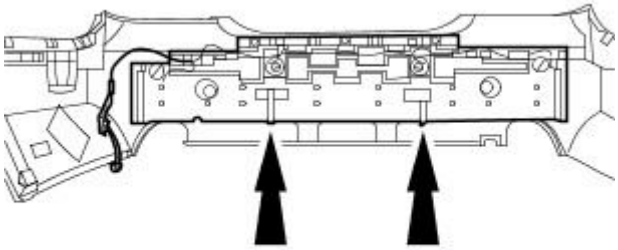

E 48728

**8.** Remove the rear bumper cover insert.

- Remove the retaining tangs.

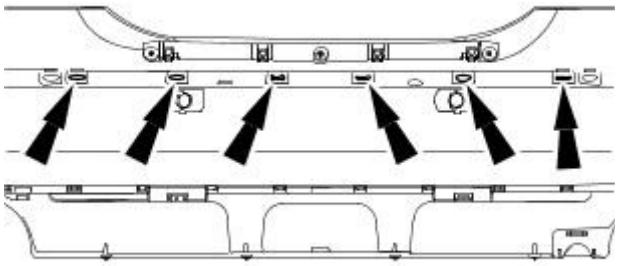

E 49683

**9.** Remove the rear bumper cover insert.

- Remove the retaining tangs.

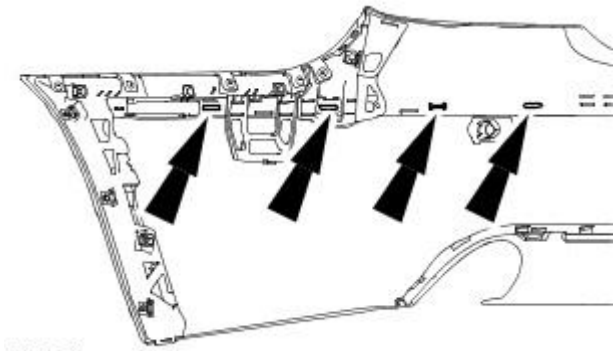

E 49684

## Installation

**1.** To install, reverse the removal procedure.

GETtheMANUALS.org

# Safety Belt System -

**Torque Specifications**

| Description | Nm | lb-ft | lb-in |
|---|---|---|---|
| Front safety belt retractor to seat track retaining bolt | 35 | 26 | - |
| Front safety belt retractor retaining bolt | 40 | 30 | - |
| Front safety belt buckle retaining bolt | 35 | 26 | - |
| Front safety belt shoulder height adjuster retaining bolt | 40 | 30 | - |
| Rear center safety belt retractor retaining bolts | 40 | 30 | - |
| Rear safety belt retractor retaining bolts | 40 | 30 | - |
| Rear safety belt buckle retaining bolts | 40 | 30 | - |

GETtheMANUALS.org

# Safety Belt System - Safety Belt System

Description and Operation

CAUTION: Electronic modules are sensitive to static electrical charges. If exposed to these charges, damage may result.

• NOTE: Repair is made by replacement only. If apart is replaced and the new part does not correct the condition, install the original part and carry out the diagnostic procedure again.

The safety belt system fitted to the vehicle utilizes the conventional lap and diagonal three point fixing. The front and rear safety belts use a conventional static type buckle which is attached to the seat frame of each front seat and directly to the floor pan underneath the rear seats.

The front safety belt buckles and rear safety belt retractors incorporate pretensioners.

Each front safety belt buckle is fitted with a switch, which is connected through a wiring harness to a warning indicator which is housed within the instrument cluster. When the ignition is first turned on the warning indicator will illuminate only if the safety belt is not fastened. If the safety belt is fastened before the ignition is turned on the circuit is broken and the indicator will remain off. The safety belt retractors which are mounted within the base of the B pillars, incorporate a torsion bar load limiting device. This device consists of a retractor reel which is mounted onto a spindle (torsion bar) which once the sensor has locked the retractor reel and a predetermined load is applied, twists and additional webbing into the system. It should be considered that during any event that utilizes the full capability of the safety belts, the webbing may have been elongated and the torsion bar may have twisted. For this reason, if a vehicle is involved in an accident which results in the deployment of the airbag(s), all the safety belts that were in use at the time of the accident MUST NOT be reused, NEW safety belts MUST be installed.

## Emergency Locking Retractor (ELR)

The retractors in all seat positions feature ELR. During any period of sudden deceleration, or under torsional load when cornering at speed, a sensor weight within the safety belt retractor moves a locking pawl against the teeth on the retractor reel, which then locks the retractor preventing any further release of webbing. As soon as the load applied onto the retractor through the safety belt webbing is removed the locking pawl releases the retractor reel and normal movement is returned to the retractor.

## Automatic Locking Retractor (ALR)

Automatic locking retractors (ALR) are installed in all passenger seat positions. The safety belt webbing on these are clearly marked with a label to show their operating feature. The ALR feature is initiated by pulling all of the webbing from the retractor with the buckle fastened, when the webbing is then released as it retracts the retractor locks allowing travel only back into the retractor preventing the safety belt from introducing slack, and making any child seat it may be restraining more secure. The ALR mode of the retractor is disengaged by allowing the unfastened webbing to fully retract on to the reel.

GETtheMANUALS.org

# Safety Belt System - Safety Belt System

Diagnosis and Testing

## Inspection and Verification

1. **1.** Verify the customer concern by operating the safety belt.
2. **2.** Visually inspect for obvious signs of mechanical and electrical damage.

**Visual Inspection Chart**

| Mechanical |
|---|
| • Loose webbing<br>• Warning indicator bulb<br>• Damaged/frayed webbing<br>• Safety belt retractor |

3. **3.** If the fault is not visually evident determine the symptom(s) and proceed to the Symptom Chart.

**Symptom Chart**

| Symptom | Possible Sources | Action |
|---|---|---|
| Normal Mode - Occupant Restraint System Inoperative | * Broken tooth on retractor sensor gear.<br>* Loose webbing. | * REFER to the Functional Test in this section. |
| Automatic Locking Retraction System (ALR) Inoperative. | * Broken tooth on retractor sensor gear.<br>* Loose webbing. | * REFER to the Functional Test in this section. |

## Poor Retraction

WARNING: In the event of an accident in which the air bags have been deployed, ALL safety belts that were in use at the time of the accident must be removed and NEW safety belts MUST be installed. Failure to follow this instruction will result in personal injury and component failure.

If a safety belt does not retract correctly, check that the anchor covers and trim bezels are correctly installed and not rubbing against the safety belt webbing. Where necessary, check the safety belt webbing is not rubbing at one end of the retractor cover slot and if so, correct by loosening the retaining bolt, aligning the retractor to centralize the safety belt webbing and retighten the bolt.

The vehicle is equipped with two front and three rear inertia reel safety belts. These safety belts are "dual sensitive" which means that they have:

- A vehicle motion sensor, which lock the safety belt webbing under braking, cornering, on steep hills and in adverse camber conditions.
- A webbing motion sensor, which locks when the safety belt webbing is quickly extracted.

Both systems should be fully operational and can be checked by the tests below:

## Vehicle Motion Sensor Test

Either of the following two procedures may be used to check correct operation of the vehicle motion sensor. Both methods require two people but note that people of larger than normal should not be asked to conduct these tests. This is to avoid the possibility of a fully unrolled safety belt webbing being mistaken for a correctly locked safety belt retractor.

### Test Method 1(braking)

WARNING: It is important that during this test, the wearer allows the safety belt to provide the restraint, the wearer should not attempt to anticipate the sudden deceleration and the driver should not brace themselves against the steering wheel. However, both the driver and the passenger must prepare themselves for the possibility that the safety belt will not lock. The passenger should hold their hands in front of him, just clear of the instrument panel or front seat backrest. Depending on which belt is being tested. Failure to follow these procedures will result in personal injury.

- Select for this test a quiet or private stretch of road. Make sure that the road is clear and that full visibility is maintained at all times.
- Both driver and passenger should adopt normal, comfortable seating position. Both occupants should wear the safety belts and the safety belt webbing must be correctly adjusted, with no slack.
- Proceed at a speed of approximately 6 miles/hour (10 km/h), do not exceed 6 miles/hour (10 km/h) for this test.
- Apply the foot brake sharply to stop the vehicle. If the vehicle motion sensitive lock mechanism is operating correctly, the safety belt webbing will lock and restrain the wearer.
- Conduct the test twice in each front and rear passenger seat position.
- Any safety belt retractor which does not restrain the wearer during this test must not be reused. A NEW safety belt must be installed.

### Test Method 2 (Turning circle)

This method requires a flat open area of private road, sufficient for the vehicle to be driven in a continuous circle on full lock.

- The driver should wear the safety belt provided and the belt webbing must be correctly adjusted, with no slack.
- The passenger should occupy a rear seat with the safety belt correctly adjusted.
- Start the engine and, with the steering on full right-hand lock, drive the vehicle in a continuous circle at 10 miles/hour (16 km/h), do not exceed 10 miles/hour (16 km/h).
- When the speed is stable, the passenger should attempt to slowly extract the safety belt webbing from each safety belt retractor in turn. If the vehicle motion sensitive lock mechanism is operating correctly, it will not be possible to extract the webbing.
- Any safety belt retractor from which it is possible to extract the webbing during this test must not be used. A NEW safety belt must be installed.

GETthemANUALS.org

### Safety Belt Webbing Sensor Test

With the vehicle stationary and on level ground take firm hold of the safety belt webbing (on the tongue side of the upper safety belt anchor) and pull out quickly. The retractor should lock within 0.25 metre (10 inches), preventing further webbing payout. Any safety belt retractor from which it is possible to extract further webbing must not be used. A new safety belt must be installed.

## Component Test

### Service installation of Safety belts

It is possible that the safety belt assemblies installed in service may have been damaged during handling or installation to the vehicle. The damage is contained within the inner workings of the retractor and is therefore, not visible. However, the damage usually causes the retractor to stick or jam. The damage can only occur before installation is completed and is usually in one of the following ways:

- The safety belt webbing is allowed to retract onto the spindle until it jams the locking mechanism in a way that cannot occur when the safety belt is installed in the car. The safety belt webbing prevents the correct locking action and if the safety belt webbing is snatched or jerked out of the retractor, the loads are not taken on this high strength locking mechanism.
- The webbing is snatch loaded by attempted fast extraction or manual testing with the safety belt held in the hand. This can result in deceleration which are much higher than those occurring in accident situations and there is a risk of damage to the mechanism.

When handling safety belt assemblies, adopt the following procedures:

WARNING: If the following procedures are not successful, reject the safety belt assembly. Do not try to jerk or snatch the webbing out of the retractor as this may cause damage. Failure to follow these procedures could and may cause damage or personal injury.

- If the safety belt webbing retracts and will not extract under low webbing tension, install the retractor onto its mounting in the car , which will set it at its correct angle, and the safety belt webbing should extract easily.
- If it does not, feed 5-10 mm (3/16 - 3/8 inch) more safety belt webbing onto the spindle (rotate the spindle using finger pressure if necessary) and the safety belt webbing should then extract.

GETtheMANUALS.org

# Safety Belt System - Front Safety Belt Buckle

Removal and Installation

## Removal

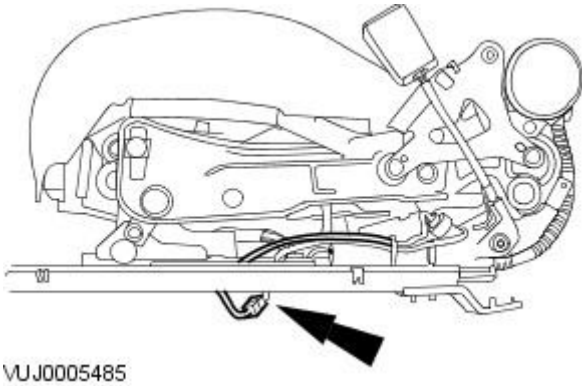

VUJ0005485

1. Remove the front seat. For additional information, refer to Section 501-10 Seating.
2. Disconnect the front safety belt buckle electrical connector.

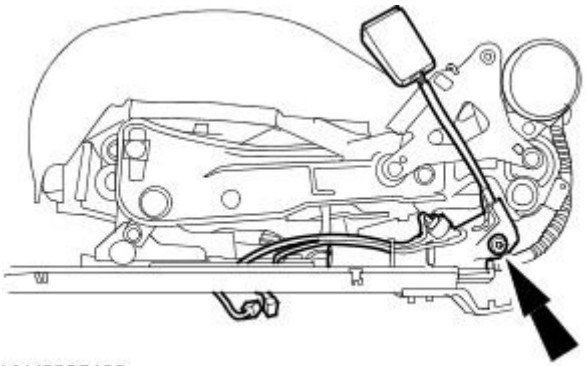

VUJ0005486

3. NOTE: The front safety belt buckle retaining bolt is part of the safety belt buckle and should not be separated.

   Remove the front safety belt buckle.

## Installation

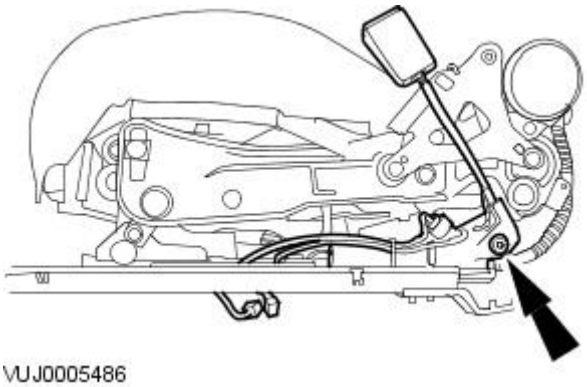

VUJ0005486

1. CAUTION: Make sure all retaining bolts and retaining nuts are hand started and hand tightened prior to final tightening. Failure to follow this instruction may result in component damage.

   To install, reverse the removal procedure.

   - Tighten to 35 Nm.

GETtheMANUALS.org

# Safety Belt System - Front Safety Belt Retractor

Removal and Installation

## Removal

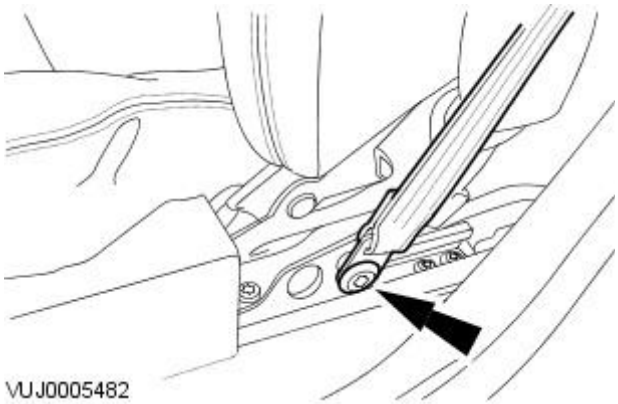


1. Reposition the front seat to the forward position.
2. Detach the front safety belt anchor retaining bolt.

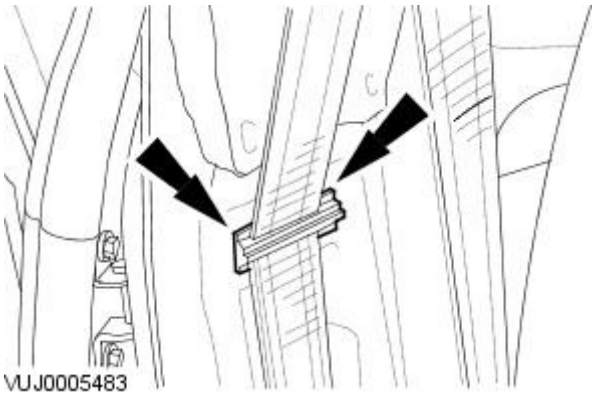


3. Remove the b-pillar lower and upper trim panels. For additional information, refer to Section 501-05 Interior Trim and Ornamentation
4. Detach the front safety belt retractor retaining clip.

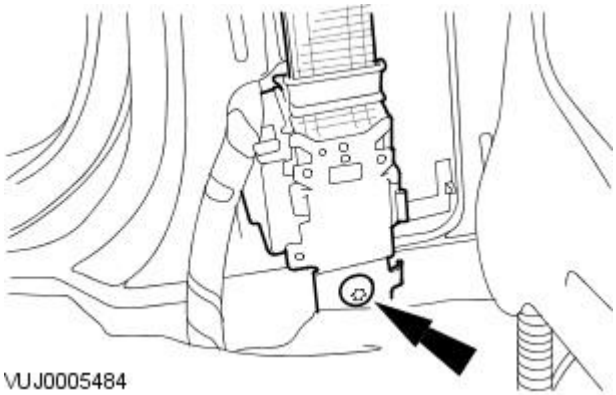


5. Remove the front safety belt retractor.

## Installation

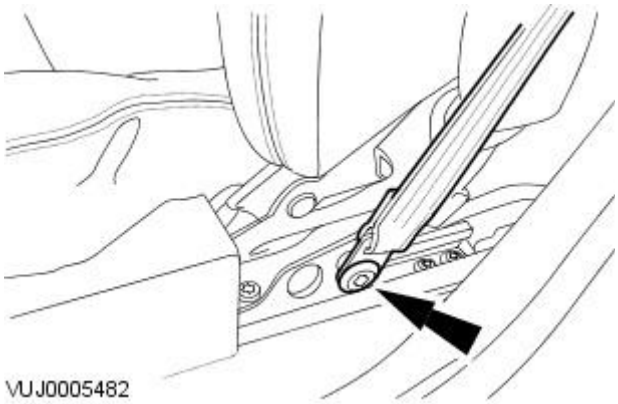


1. CAUTION: Make sure all retaining bolts and retaining nuts are hand started and hand tightened prior to final tightening. Failure to follow this instruction may result in component damage.

   To install, reverse the removal procedure.

   - Tighten to 35 Nm.

GETtheMANUALS.org

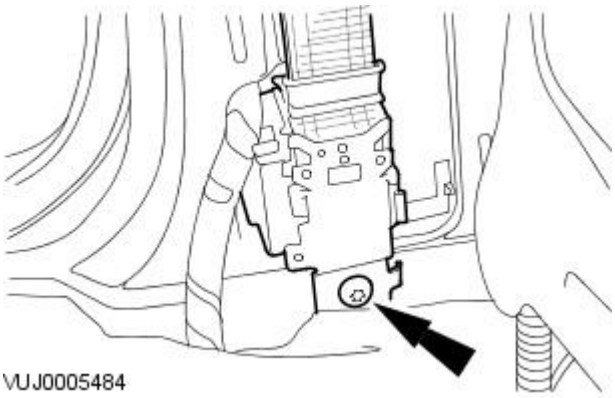


**2.** Tighten to 40 Nm.

GETtheMANUALS.org

# Safety Belt System - Front Safety Belt Shoulder Height Adjuster

Removal and Installation

## Removal

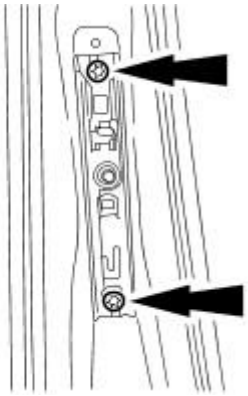

A0001859

1. Remove the B-pillar upper trim. For additional information, refer to Section 501-05 Interior Trim and Ornamentation.
2. Remove the front safety belt shoulder height adjuster.

## Installation

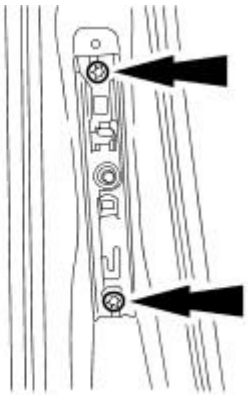

A0001859

1. CAUTION: Make sure all retaining bolts and retaining nuts are hand started and hand tightened prior to final tightening. Failure to follow this instruction may result in component damage.

   To install, reverse the removal procedure.

   - Tighten to 40 Nm.

GETtheMANUALS.org

# Safety Belt System - Rear Center Safety Belt Retractor

Removal and Installation

## Removal

1. WARNING: To avoid accidental deployment and possible personal injury, the the backup power supply must be depleted before repairing or replacing any air bag supplemental restraint system (SRS) components. To deplete the backup power supply energy, disconnect the battery ground cable and wait for one minute. Failure to follow this instruction may result in personal injury.

   Disconnect the battery ground cable,
   For additional information, refer to Section 414-01 Battery, Mounting and Cables.

2. Detach the rear center safety belt retractor from the right-hand rear safety belt buckle.

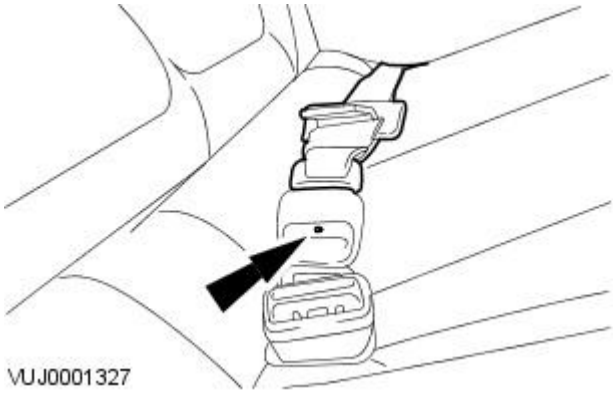


3. Remove the rear parcel shelf. For additional information, refer to Section 501-05 Interior Trim and Ornamentation

4. Disconnect the rear center safety belt retractor electrical connector.

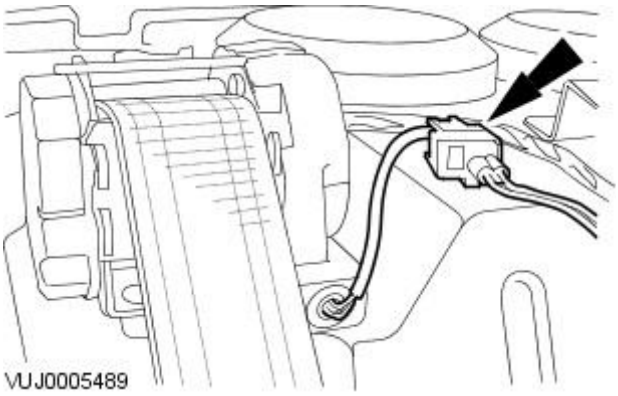


5. Remove the rear center safety belt retractor.

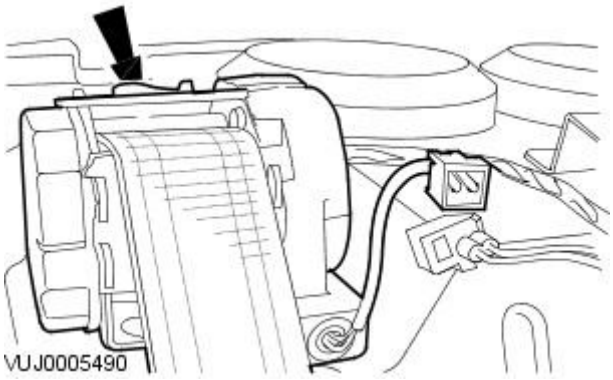


## Installation

GETtheMANUALS.org

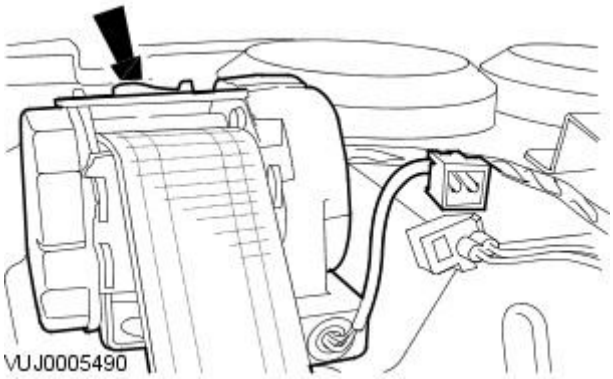


**1.** CAUTION: Make sure all retaining bolts and retaining nuts are hand started and hand tightened prior to final tightening. Failure to follow this instruction may result in component damage.

To install, reverse the removal procedure.

- Tighten to 40 Nm.

GETtheMANUALS.org

# Safety Belt System - Rear Safety Belt Buckle

Removal and Installation

## Removal

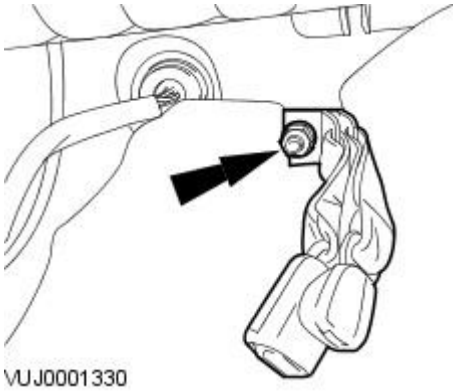


1. Remove the rear seat cushion.
   For additional information, refer to Section 501-10 Seating.
2. Remove the rear safety belt buckle.

## Installation

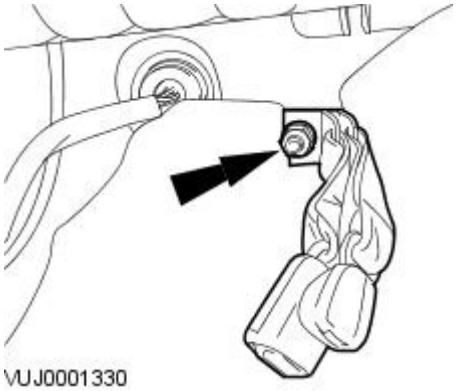


1. CAUTION: Make sure all retaining bolts and retaining nuts are hand started and hand tightened prior to final tightening. Failure to follow this instruction may result in component damage.

   To install, reverse the removal procedure.

   - Tighten to 40 Nm.

GETtheMANUALS.org

# Safety Belt System - Rear Safety Belt Retractor

Removal and Installation

## Removal

**1.** WARNING: To avoid accidental deployment and possible personal injury, the backup power supply must be depleted before repairing or replacing any air bag supplemental restraint system(SRS) components. To deplete the backup power supply energy, disconnect the battery ground cable and wait for one minute. Failure to follow this instruction may result in personal injury.

Disconnect the battery ground cable,
For additional information, refer to Section 414-01 Battery, Mounting and Cables.

**2.** Remove the C-pillar interior trim panel.
For additional information, refer to Section 501-05 Interior Trim and Ornamentation.

**3.** Detach the rear safety belt anchor retaining bolt.

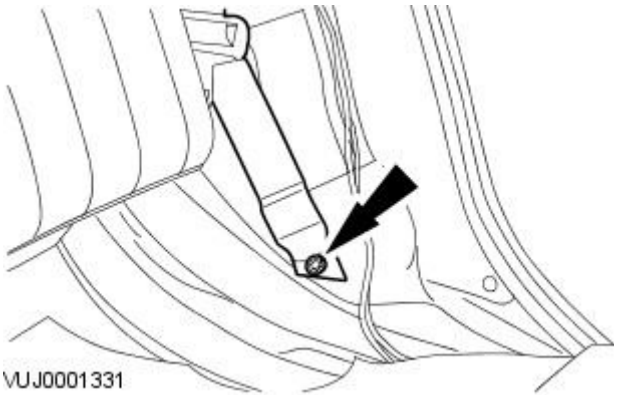


**4.** Disconnect the rear safety belt retractor electrical connector.

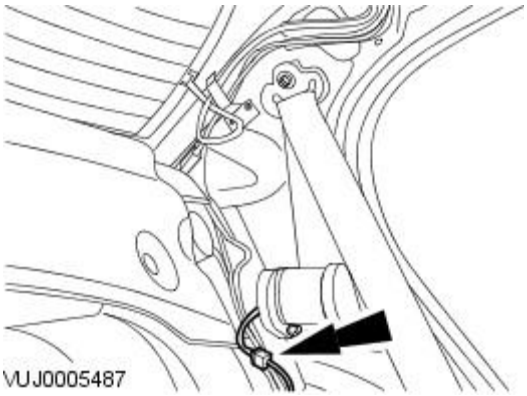


**5.** Remove the rear safety belt retractor.

1. Detach the rear safety belt upper mounting bracket.
2. Remove the rear safety belt retractor.

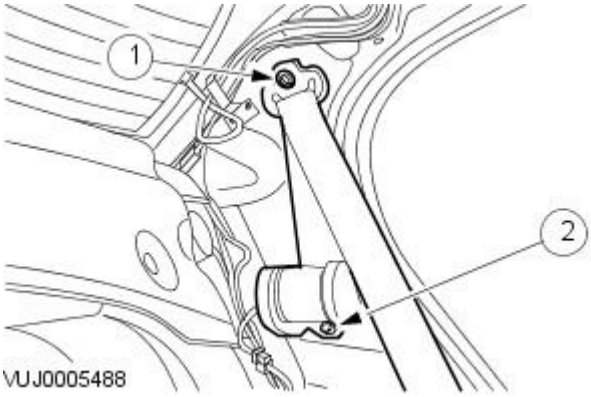


## Installation

GETtheMANUALS.org

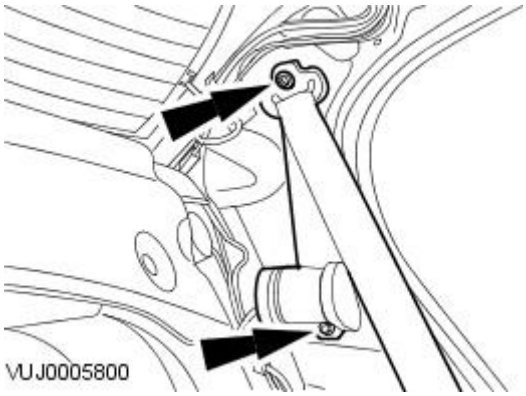


**1.** CAUTION: Make sure all retaining bolts and retaining nuts are hand started and hand tightened prior to final tightening. Failure to follow this instruction may result in component damage.

To install, reverse the removal procedure.

- Tighten to 40 Nm.

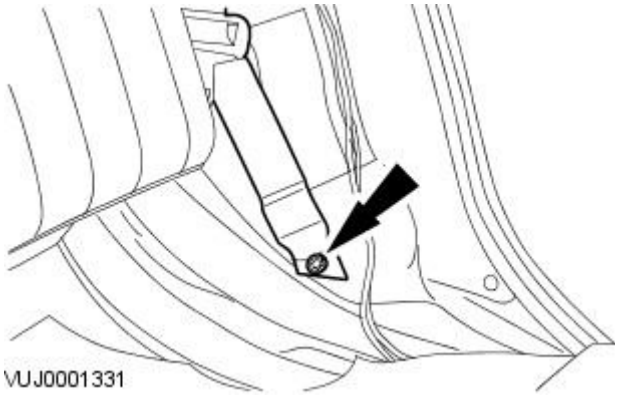


**2.** Tighten to 40 Nm.

GETtheMANUALS.org

# Supplemental Restraint System -

**Torque Specifications**

| Description | Nm | Lb/Ft | Lb/In |
|---|---|---|---|
| Passenger Air Bag Module Retaining Nuts | 12 | 9 | — |
| Passenger Air Bag Module Retaining Bolts | 9 | — | 80 |
| Restraints Control Module (RCM) Retaining Nuts | 12 | 9 | — |
| Seat Position Sensor Retaining Bolt | 5 | — | 44 |
| Side Air Curtain Module Inflator Retaining Bolts | 9 | — | 80 |
| Side Air Curtain Module Retaining Screws | 1 | — | 9 |
| Side Air Curtain Module Tether Straps Retaining bolts | 9 | — | 80 |
| Side Air Bag Module Retaining Nuts | 7 | — | 62 |
| Side Impact Sensor Retaining Bolt | 12 | 9 | — |
| Crash Sensor Retaining bolt | 12 | 9 | — |
| Driver Air Bag Module Retaining Screws | 7 | — | 62 |
| Clockspring retaining screws | 5 | — | 44 |

GETtheMANUALS.org

# Supplemental Restraint System - Air Bag Supplemental Restraint System (SRS)

Description and Operation

The air bag supplemental restraint system (SRS) is designed to provide increased collision protection for vehicle occupants in addition to that provided by the three-point safety belt system. Safety belt use is necessary to obtain the best occupant protection and to receive the full advantages of the SRS.

The air bag supplemental restraint system (SRS) components are shown in the following illustrations.

Air Bag Supplemental Restraint System (SRS) Components

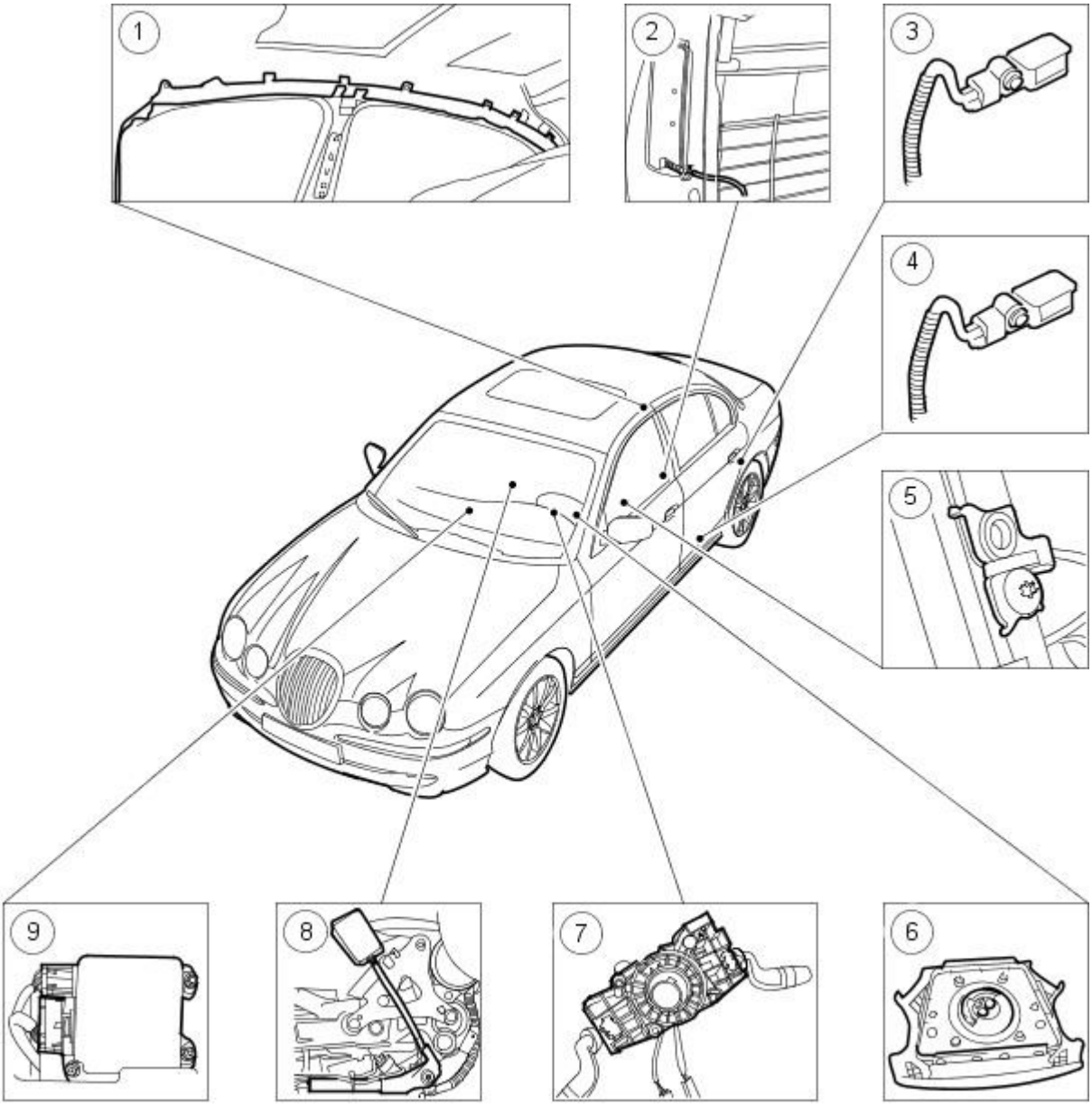


VUJ0005714

| Item | Part Number | Description |
|---|---|---|
| 1 | — | Side air curtain module |
| 2 | — | Side air bag module |
| 3 | — | C-Pillar side impact sensor |
| 4 | — | B-Pillar side impact sensor |
| 5 | — | Seat position sensor |
| 6 | — | Driver air bag module |
| 7 | — | Clockspring |
| 8 | — | Safety Belt pretensioner |
| 9 | — | Restraints control module (RCM) |

Air Bag Supplemental Restraint System (SRS) Components

GETtheMANUALS.org

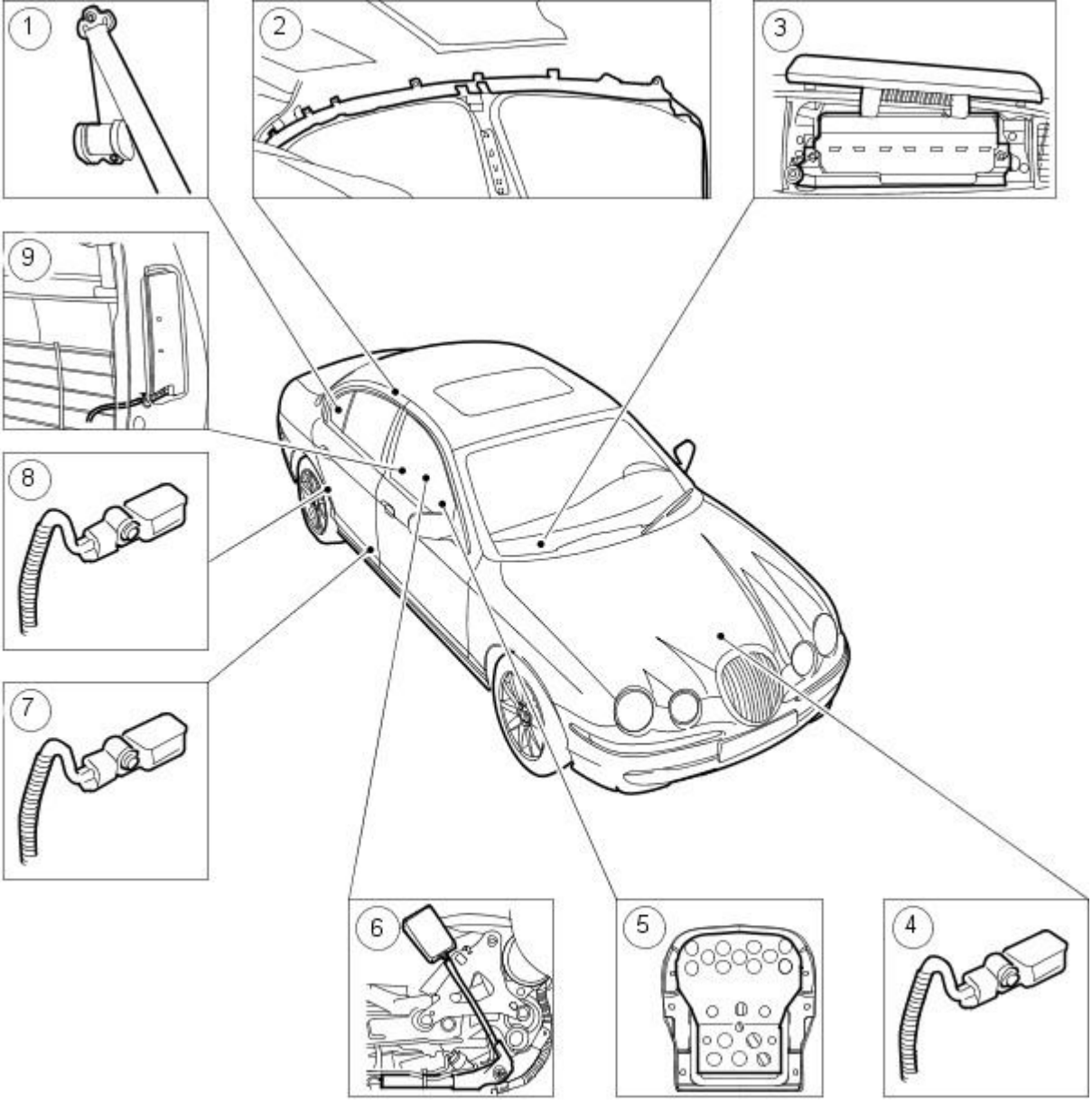


VUJ0005715

| Item | Part Number | Description |
|---|---|---|
| 1 | — | Rear safety belt retractor and pretensioer |
| 2 | — | Side air curtain module |
| 3 | — | Passenger air bag module |
| 4 | — | Crash sensor |
| 5 | — | Front passenger seat occupant classification sensor |
| 6 | — | Front safety belt pretensioner |
| 7 | — | B-Pillar side impact sensor |
| 8 | — | C-Pillar side impact sensor |
| 9 | — | Side air bag module |

## Sensors

WARNING: Prior to the removal of any SRS sensors and before disconnecting any SRS sensor electrical connectors, the battery ground cable must be disconnected and a period of one minute allowed to elapse.

• NOTE: The SRS sensors do not contain any serviceable components.

The SRS consists of the following sensors:

### Occupant Position Sensors

The four sensors are strategically placed to detect the presence and movement of the passenger front seat occupant.

The occupant position sensor system uses ultrasound at an operating frequency of 40 kilohertz to monitor the passenger front seat occupant. The SRS uses four ultrasonic sensors, one in the A-pillar, one at the top of the instrument panel console and two in the headliner. The sensors determine the presence and position of the passenger front seat occupant with respect to the passenger air bag deployment door. The sensors determine passenger air bag module deployment decisions by classifying occupants as either 'in position' or 'out of position' according to the predetermined 'keep out zone'. The sensors are part of a system that is sophisticated enough to be unaffected by body extremities (hands and feet) and respond only to head or body movements.

### Crash Sensor

The crash sensor is attached to the body behind the radiator grille. The restraints control module (RCM) processes the crash data sent by the crash sensor against stored data, and deploys the front air bags.

GETtheMANUALS.org

### Side Impact Sensors

The side impact sensors are mounted at the base of the B-pillars and C-pillars to facilitate lateral impact sensing. In the event of a side impact, the RCM processes the crash data against the stored data. The RCM will deploy the side air bag module, safety belt pretensioners and side air curtain module on the side the deployment request was initiated.

### Seat Position Sensor

The seat position sensor is located on the driver seat track. The seat position sensor determines the position of the driver seat, which is then communicated to the RCM. If the driver seat is in the forward position, the driver air bag module second stage is disabled.

### Front Passenger Seat Occupant Classification Sensor

• NOTE: The front seat occupant classification sensor is serviced as a calibrated assembly.

Individual components of the front seat passenger weight sensing system are not serviceable. The system must be replaced as a complete unit and due to its sophistication, each replacement system requires calibration, so to avoid the need to provide calibration equipment to each dealer, a pre-calibrated service kit is available. The following components are combined and calibrated during manufacture to form the front seat passenger weight sensing system:

- Passenger seat cushion
- Silicone filled bladder
- Weight sensing control module
- Pressure sensor

The weight sensing control module is mounted under the passenger front seat. The silicone filled bladder is integrated into the seat cushion and the pressure sensor, which is attached to the bladder, is mounted under the seat

The silicone filled bladder responds to weight changes on the passenger front seat. The pressure sensor responds to these pressure changes and provides an appropriate signal to the weight sensing control module. The weight sensing control module processes the input signal received from the pressure sensor and makes it available to the RCM via the controller area network (CAN). In addition, the weight sensing control module performs self-diagnostic functions on the system, with any malfunctions being notified to the RCM accordingly.

The front seat passenger weight sensing system responds to the occupancy of the passenger front seat in accordance with the following:

- Passenger front seat status 'EMPTY' — Passenger air bag status 'OFF' — Passenger Air Bag Deactivation (PAD) indicator 'OFF'
- Passenger front seat status 'OCCUPIED' (small occupant) — Passenger air bag status 'OFF' — PAD indicator 'ON'
- Passenger front seat status 'OCCUPIED' (large occupant) — Passenger air bag status 'ON' — PAD indicator 'OFF'

The SRS via the RCM, monitors and processes data from the front seat passenger weight sensing system and several other sensors before making a deployment decision. Malfunction of the sensing system or associated circuits will cause the SRS indicator to illuminate.

### Front Safety Belt Buckle Sensors

The safety belt buckle sensor is a 'hall effect' type sensor which provides an output signal in response to the magnetic field disturbance caused by the insertion of the safety belt tongue into the buckle. The output signal from the sensor is used by the RCM to determine whether the front seat occupants are correctly restrained. It is used in conjunction with other components of the SRS to ensure that air bag module and safety belt pretensioner deployment only occurs where necessary. For additional information, refer to Section 501-20A Safety Belt System / 501-20B Supplemental Restraint System.. Malfunction of the sensor or associated circuits will cause the SRS indicator to illuminate.

## Modules

WARNING: Prior to the removal of any SRS module and before disconnecting any SRS module electrical connectors, the battery ground cable must be disconnected and a period of one minute allowed to elapse.

• NOTE: The SRS modules do not contain any serviceable components.

The SRS consists of the following modules:

### Restraints Control Module (RCM)

The RCM is mounted on the top of the drive shaft tunnel below the instrument panel console. It identifies crash severity, the direction of impact and makes decisions on deployment of air bag modules and safety belt pretensioners. It also provides firing signals to all air bag modules and safety belt pretensioners.

The RCM controls air bag deployment decisions by using signals from its internal accelerometer and the following:

- Crash sensor
- Side impact sensors
- Occupant position sensors
- Front safety belt buckle sensor
- Seat position sensor
- Front passenger seat occupant classification system

Internally, the RCM has two areas that determine which elements of the SRS are to be deployed:

- Crash severity evaluation — This area evaluates crash severity by using data from the RCM internal accelerometer, the crash sensor and the safety belt buckle sensor. Based on this data, the RCM decides which level of air bag module deployment is required and forwards the information to the second area, the deployment handler.
- Deployment handler — The status of the seat track position sensor, occupant position sensors, front passenger seat occupant classification sensor and safety belt buckle sensors are examined before a decision is made about which restraints should finally be deployed. For instance, if the occupant position sensors and front passenger seat occupant classification sensor indicate that the front passenger seat is empty, then no restraint deployment will take place on the passenger side, even if full deployment takes place on the driver side.

Data from the side crash sensors is used by the RCM in conjunction with acceleration data from the RCM internal accelerometer to make a deployment decision. The RCM processes the acceleration data and subject to an impact being of high enough severity, decides whether the side air bag module should be deployed. The decision is forwarded to the deployment handler (within the RCM) which responds appropriately. For example, in the case that the front passenger seat occupant classification sensor calculates that the seat is empty, or occupied by a small person, the passenger side air bag module will be disabled.

GETmeMANUALS.org

On board testing of the air bag modules, front safety belt pretensioner firing circuits, warning indicator circuits and module status (the crash and side impact sensors perform basic self-tests) is performed by the RCM together with the storing of fault codes.

The RCM drives the SRS indicator on the instrument pack. If the warning lamp fails, a fault code is recorded and a warning tone is sounded. It also provides a temporary back-up power supply to operate the air bag modules in the event that in crash conditions, the battery supply is lost. In the event of a crash, it records certain data such deceleration information, firing delay and fault codes for subsequent access via the diagnostic connector.

### Driver Air Bag Module

• NOTE: Variation in the driver air bag module deployment is determined by the timing of the first and second stage ignition signals. This facilitates adaptation of the stiffness and timing of the air bag module to optimize occupant protection.

The driver air bag module is controlled by the RCM which chooses between first or second stage deployment, depending on the occupant position and the crash severity. To reduce the risk of an air bag module induced injury to a driver that is positioned close to the steering wheel, the air bag module deploys radially. It has a non-azide propellant that reduces particulates and effluents. It consists of a two stage inflator with separate chambers for the two inflation stages, each being independently activated by the RCM. It has two electrical connectors that are color coded to the respective connector on the inflator.

### Passenger Air Bag Module

• NOTE: Variation in the passenger air bag module deployment is determined by the timing of the first and second stage ignition signals. This facilitates adaptation of the stiffness and timing of the air bag module to optimize occupant protection.

The passenger air bag module is controlled by the RCM which chooses between first or second stage deployment, depending on the occupant status and the crash severity. It consists of a two stage inflator with two air bag electrical connectors to accommodate the two stage inflation.

The heated gas inflator consists of a high-pressure mix of clean air and hydrogen gas, triggered by two separate ignition squibs. It produces a controlled generation of clean gas to rapidly fill the air bag. It is classified as a stored flammable gas (not as an explosive) and as such, has less restrictive storage and transportation requirements. It produces a very clean burn and almost no particulates and is almost free of any toxins, making disposal or recycling much easier.

### Side Air Bag Module

• NOTE: In the event of a side impact that is sufficient to deploy the side air bag module, it will be necessary to replace the complete seat. The side air bag module does not contain any serviceable components.

The side air bag module is mounted in the outboard bolster of each front seat and uses compressed argon to inflate. It provides protection for the thorax (the part of the trunk between the neck and the abdomen). In an air bag deployment situation, it deploys through the stitch seam in the side bolster. To ensure the air bag always emerges at the same point, a chute is attached to the inside of the trim cover and wrapped around the air bag module.

### Side Air Curtain Module

• NOTE: In the event of a side impact that is sufficient to deploy the side air curtain module, it will be necessary to replace the headliner, A-pillar and C-pillar trim panels and the B-pillar upper trim panel will require thorough examination for visible damage or deformation before it can be used again on the vehicle.

• NOTE: The side air bag module does not contain any serviceable components.

The side air curtain modules are located under the headliner between the A and C-pillar and deploy at the same time as the corresponding side air bag module. If the passenger air bag module is deactivated the corresponding side air bag module is also deactivated, however the side air curtain module will still deploy to afford protection to any corresponding rear occupant. When deployed, the side air curtain extends down to approximately shoulder height to protect both the front and rear occupants heads. Both the front and rear of the side air curtain modules are retained to the A and C-pillar respectively by tethers.

## Pretensioners

WARNING: Prior to the removal of any SRS pretensioners and before disconnecting any SRS pretensioer electrical connectors, the battery ground cable must be disconnected and a period of one minute allowed to elapse.

• NOTE: The SRS pretensioners do not contain any serviceable components.

The SRS consists of the following pretensioners:

### Safety Belt Buckle Pretensioners

The front safety belt buckle and pretensioners are seat mounted and incorporate a safety buckle switch. In the event of a front or side impact the RCM will deploy the pretensioners provided the safety belt buckles are fastened. The safety belt buckle pretensioners have a lower deployment threshold than that required by the air bags. Hence it is possible during a minor collision, which exceeds the deployment threshold, that only the safety belt buckle pretensioners will deploy. The RCM receives information on the status of the safety belt buckles from a switch contained in the buckle. For additional information, refer to Section 501-20A Safety Belt System / 501-20B Supplemental Restraint System.

### Rear Safety Belt Pretensioners

Each rear safety belt incorporates a pretensioner device. In the event of low/high speed frontal impact, these provide additional occupant protection by removing any excess slack from the safety belts. Safety belt pretensioners activate when a frontal impact of sufficient force occurs. Under such an impact, the restraints control module installed on the transmission tunnel sends a firing signal to each pretensioner. Receipt of this signal by each pretensioner directly triggers a pyrotechnic igniter unit. The resulting detonation propels a train of steel balls through a tube and directed onto an impeller mounted on the reel spindle. Rapid rotation of the impeller simultaneously rotates the seat belt reel, retracting any slack. The seat belt retractors and pretensioners are not serviceable components and dismantling must not be attempted as active pretensioning components contain a solid, flammable material. For additional information, refer to Section 501-20A Safety Belt System / 501-20B Supplemental Restraint System.

## Indicators

WARNING: Prior to the removal of any SRS Indicators and before disconnecting any SRS indicator electrical connectors, the battery ground cable must be disconnected and a period of one minute allowed to elapse.

GETtheMANUALS.org

• NOTE: The SRS indicators do not contain any serviceable components.

The SRS consists of the following indicators:

### SRS Indicator

The SRS indicator is located in the instrument cluster and is driven by the RCM. Malfunction of SRS components or associated circuits will cause the SRS indicator to illuminate. If the warning lamp fails, a fault code is recorded and a warning tone is sounded.

### Passenger Air Bag Module Deactivation (PAD) Indicator

The passenger air bag deployment door has a built in lens that displays the passenger air bag module deactivated symbol. The symbol is backlit by the PAD indicator, which is attached to the instrument panel. The illumination of the symbol informs the front seat occupants whether or not the passenger air bag module has been deactivated by the occupancy sensing system.

## Clockspring

WARNING: Prior to the removal of the SRS clockspring and before disconnecting any SRS clockspring electrical connectors, the battery ground cable must be disconnected and a period of one minute allowed to elapse.

• NOTE: The SRS clockspring does not contain any serviceable components.

The clockspring is designed to carry signals between the RCM and the driver air bag module. The clockspring is fitted to the steering column , and consists of fixed and moving parts connected by a coiled tape with integral conducting tracks. The tape is able to 'wind up' and 'unwind' as the steering wheel (to which the moving part is attached) is turned, maintaining electrical contact at all times between the RCM and the driver air bag module.

GETtheMANUALS.org

# Supplemental Restraint System - Air Bag Supplemental Restraint System (SRS)

Diagnosis and Testing

## Inspection and Verification

For a detailed description of the supplemental restraints system and operation, refer to the relevant Description and Operation section in the workshop manual. REFER to:
REFER to: Air Bag Supplemental Restraint System (SRS) (501-20B Supplemental Restraint System, Description and Operation).

• WARNINGS:

ENSURE ALL SAFETY PROCEDURES ARE FOLLOWED BEFORE AND DURING ANY WORK THAT IS CARRIED OUT ON THE SRS

TO AVOID ACCIDENTAL DEPLOYMENT AND POSSIBLE PERSONAL INJURY, THE BACKUP POWER SUPPLY MUST BE DEPLETED BEFORE REPAIRING OR REPLACING ANY AIR BAG SUPPLEMENTAL RESTRAINT SYSTEM (SRS) COMPONENTS. TO DEPLETE THE BACKUP POWER SUPPLY ENERGY, DISCONNECT THE BATTERY GROUND CABLE AND WAIT ONE MINUTE. FAILURE TO FOLLOW THIS INSTRUCTION MAY RESULT IN PERSONAL INJURY

• CAUTIONS:

Diagnosis by substitution from a donor vehicle is NOT acceptable. Substitution of control modules does not guarantee confirmation of a fault, and may also cause additional faults in the vehicle being tested and/or the donor vehicle

If the RCM has been identified as being faulty and requires replacement, any additional faults within the SRS system MUST be repaired and DTCs cleared BEFORE replacing the RCM. Replacing the RCM before rectifying other faults will cause the new RCM to remain in delivery mode. In this state, the module's diagnostic features are not accessible

- Only one Flash Code will be displayed at a time, however there may be multiple fault codes stored
- The PID code, which is displayed on the IDS screen in brackets against the DTC, differs from the Flash Code. These codes must not be confused as incorrect diagnosis may occur
- This document is to be used as a guide only. It supports the existing diagnostic equipment, circuit diagrams and workshop manual
- If a fault is identified with the Occupancy Classification System (OCS) module, passenger seat weight sensor or passenger seat weight sensor harness, all of these components must be replaced as a complete kit

• NOTE: Given the legal implications of a restraints system failure, harness repairs to airbag module circuits are not acceptable. Where the text refers to "REPAIR the circuit", this will normally mean the replacement of a harness

Manufacturer approved diagnostic system

Given the complexity of the system and the potential for damage/injury, the preferred method of diagnosis is via the manufacturer approved diagnostic system.

1. **1.** Verify the customer concern
2. **2.** Confirm the function of the warning lamp (if the warning lamp is inoperative, system faults will be signaled by an audible chime)
3. **3.** Visually inspect for obvious signs of electrical damage

**Visual inspection chart**

| Electrical |
|---|
| • Power condition, state of charge<br>• Make sure all electrical connector(s) are engaged correctly on the air bag circuits<br>• Wiring harness<br>• Air bag module(s)<br>• Make sure the restraints control module (RCM) is correctly installed<br>• Fuse(s)<br>• Sensor(s)<br>• Pretensioner(s)<br>• Warning lamp bulb(s) |

4. **4.** If an obvious cause for an observed or reported concern is found, correct the cause (if possible) before proceeding to the next step
5. **5.** If the cause is not visually evident, verify the symptom and refer to the manufacturer approved diagnostic system
6. **6.** Determine any Flash Code(s) that may be stored from the SRS warning indicator displayed on the instrument cluster. Retrieve any logged Diagnostic Trouble Codes (DTCs) from the Restraint Control Module (RCM) using the manufacturer approved diagnostic. Using the Index, retrieved Flash Code, DTC and PID codes determine the correct fault description. Check the list of possible causes against that fault description for poor connections, backed-out/bent pins, visible damage, or trapped harness. Within the manufacturer approved diagnostic system datalogger function there is a facility to display airbag circuit resistance as seen by the restraints control module. Utilizing the restraints control module resistance read function provides an opportunity to observe circuit resistance stability when investigating harness/connector integrity. The manufacturer approved diagnostic airbag resistance read function can be accessed in the body system section of datalogger. Typical resistance values are between 1.6 – 2.9 Ohms with the exception of driver front airbag which is between 2.4 – 4.2 Ohms due to additional circuit length within clockspring

Reading restraints flash codes

**Self-check**

Turn the ignition switch to the **ON** position

- Warning light **ON** solid for 6 seconds
- Warning light **OFF**

GETtheMANUALS.org

**Fault on system**

Turn the ignition switch to the **ON** position.

Warning light **ON** solid for 6 seconds

Warning light **OFF** for 2 seconds

Warning light flashes the appropriate number of times for the fault logged (see table)

Warning light **OFF** for 2 seconds

The sequence is repeated 5 times

Warning light **ON** until the ignition is turned **OFF**

**Example:-** Flash code 16 would be shown as lamp **ON** for one occurrence of 0.5 second then lamp **OFF** for one second, then six occurrences of lamp **ON** for 0.5 seconds each (1-6).

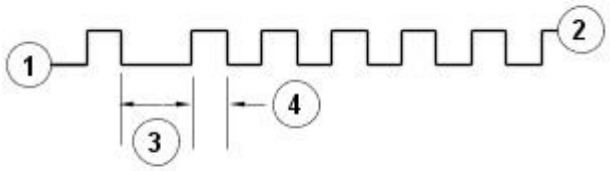


E40356

- 1. Lamp **OFF**
- 2. Lamp **ON**
- 3. Time between first digit and second digit (1 second)
- 4. Time **ON** of each flash of the second digit (0.5 second)

Priority

Priority is not assigned to any of the flash codes. They are displayed depending on which code is identified first. If multiple faults are present only one will be flashed. That fault will need to be rectified before the next code will be made available.

If the driver warning lamp is inoperative and a fault occurs, an audible chime will be sounded 90 seconds after the ignition is turned **ON**.

• NOTE: * = DTC used for more than one fault.

**Index**

| Flash Code | Combination Faults | Front Air Bags | Side Air Bags | Safety Belt Pretensioners | Impact Sensors | Occupant Classification System (OCS) | Occupant Position System (OPS) | Front Safety Belt Buckle and Seat Track Position Switches | Miscellaneous | Component Replacement |
|---|---|---|---|---|---|---|---|---|---|---|
| 12 | | | | | | | | | | x |
| 13 | | | | | | | | | | x |
| 14 | | | | | | | | | x | |
| 15 | | | | | | | | | | x |
| 16 | x | | | | | x | | | | x |
| 17 | x | | | | | | x | | | x |
| 18 | | | | | | | | | x | |
| 19 | x | x | | | | | | | | |
| 21 | x | x | | | | | | | | |
| 22 | x | | x | | | | | | | |
| 23 | x | | x | | | | | | | |
| 24 | x | | | x | | | | | | |
| 25 | x | | | x | | | | | | |
| 33 | x | | | | x | | | | | |
| 34 | x | | | | x | | | | | |
| 35 | x | | | | x | | | | | |
| 36 | x | | | | x | | | | | |
| 37 | x | | | | x | | | | | |
| 42 | x | | | | | x | | | | x |
| 43 | x | | | | | x | | | | x |
| 44 | x | | | | | x | | | | x |
| 45 | x | | | | | x | | | | x |
| 46 | x | | | | | x | | | | x |
| 49 | x | | | | | | | x | | |
| 51 | x | | | | | | | x | | |
| 52 | x | | | | | | | x | | |
| 53 | | | | | | | | | x | |
| ON | x | | | | | | | | x | |
| OFF | | | | | | | | | x | |

**Combination Faults**

CAUTION: If the RCM has been identified as being faulty and requires replacement, any additional faults within the SRS system MUST be repaired and DTCs cleared BEFORE replacing the RCM. Replacing the RCM before rectifying other faults will cause the new RCM to remain in delivery mode. In this state, the module's diagnostic features are not accessible

GETtheMANUALS.org

| Flash Code | DTC (PID code) | Fault Description | Possible Causes |
|---|---|---|---|
| 16 | B2290 (26) | Occupant Classification System (OCS) Fault | Connector: PN037 |

| | |
|---|---|
| 16 | B2290 (27) |
| 52 | B2692 |

| Flash Code | DTC (PID code) | Fault Description | Possible Causes |
|---|---|---|---|
| 19 | B2293(29) | Driver Air Bag Front - Stage 1 Open Circuit | Connector FC042, FC117 |
| 19 | B2293(21) | Driver Air Bag Front - Stage 2 Open Circuit | |

| Flash Code | DTC (PID code) | Fault Description | Possible Causes |
|---|---|---|---|
| 21 | B2293 (25) | Passenger Air Bag Front - Stage 1 Open Circuit | Connector: FC025 |
| 21 | B2293 (17) | Passenger Air Bag Front - Stage 2 Open Circuit | |

| Flash Code | DTC (PID code) | Fault Description | Possible Causes |
|---|---|---|---|
| 33 | B2292 (31) | Driver Pretensioner Squib Front - Low Resistance | Connector: DM040 |
| 22 | B2295 (29) | Driver Seat Side Air Bag - Open Circuit | |

| Flash Code | DTC (PID code) | Fault Description | Possible Causes |
|---|---|---|---|
| 34 | B2292 (26) | Passenger Pretensioner Circuit Front - Open Circuit | Connector: PN035 |
| 23 | B2295 (25) | Passenger Seat Side Air Bag - Open Circuit | |

| Flash Code | DTC (PID code) | Fault Description | Possible Causes |
|---|---|---|---|
| 46 | B2296 (25) | Passenger Side Impact Sensor Rear - Mount/Communication Fault | Connector: CA232 |
| 49 | C1981 | Driver Seat Position Switch Circuit Fault | |
| 51 | B2691 | Driver Safety Belt Buckle Switch Front - Circuit Fault | |
| 52 | B2692 | Passenger Safety Belt Buckle Switch Front - Circuit Fault | |
| 42 | B2296 (19) | Front Impact Sensor - Mount/Communication Fault | |
| 45 | B2296 (27) | Driver Side Impact Sensor Rear - Mount/ Communication Fault | |
| 44 | B2296 (29) | Passenger Side Impact Sensor Front - Mount/Communication Fault | |
| 43 | B2296 (31) | Driver Side Impact Sensor Front - Mount/Communication Fault | |
| 23 | B2295 (25) | Passenger Seat Side Air Bag - Open Circuit | |
| 22 | B2295 (29) | Driver Seat Side Air Bag - Open Circuit | |
| 25 | B2294 (25) | Passenger Side Air Curtain - Open Circuit | |
| 24 | B2294 (29) | Driver Side Air Curtain - Open Circuit | |
| 36 | B2292 (15) | Center Pretensioner Circuit Rear - Open Circuit | |
| 37 | B2292 (18) | Passenger Pretensioner Circuit Rear - Open Circuit | |
| 35 | B2292 (22) | Driver Pretensioner Circuit Rear - Open Circuit | |
| 34 | B2292 (26) | Passenger Pretensioner Circuit Front - Open Circuit | |
| 33 | B2292 (30) | Driver Pretensioner Circuit Front - Open Circuit | |

| Flash Code | DTC (PID code) | Fault Description | Possible Causes |
|---|---|---|---|
| ON | N/A | Restraint Control Module (PAD Lamp On Permanently, No Diagnostic Communications | Connector: CA114 |

| Flash Code | DTC (PID code) | Fault Description | Possible Causes |
|---|---|---|---|
| 17 | B2291 (28) | OPS Calibration Fault | Clear DTCs and Cycle Ignition |
| 17 | B2291 (29) | | |

| Flash Code | DTC (PID code) | Fault Description | Possible Causes |
|---|---|---|---|
| 16 | B2290 (26) | Local CAN Open/Short Circuit to battery Ground | Connector: PN037, PN038, PN024, CA232. Harness: Seat, Cabin |
| 17 | B2291 (29) | | |

**Front Air Bags**

CAUTION: If the RCM has been identified as being faulty and requires replacement, any additional faults within the SRS system MUST be repaired and DTCs cleared BEFORE replacing the RCM. Replacing the RCM before rectifying other faults will cause the new RCM to remain in delivery mode. In this state, the module's diagnostic features are not accessible

| Flash Code | DTC (PID code) | Fault Description | Possible Causes |
|---|---|---|---|
| 19 | B2293 (20) | Driver Air Bag Front - Stage 2 Squib Low Resistance | Connector: FC117, SW012, Clockspring. Connector: FC042, CA114. Driver Air Bag Front. Harness: Instrument Panel, Cabin |
| 19 | B2293 (21) | Driver Air Bag Front - Stage 2 Open Circuit | Connector: FC117, SW012, Clockspring. Connector: FC042, CA114. Driver Air Bag Front. Harness: Instrument Panel, Cabin |
| 19 | B2293 (22) | Driver Air Bag Front - Stage 2 Short Circuit to Power | Clockspring. Connectors: FC117, FC042, CA114, CR086. Harness: Instrument Panel, Cabin |
| 19 | B2293 (22) | Passenger Air Bag Front - Stage 1 Squib Low Resistance | Clockspring. Connectors: FC117, FC042, CA114, CR086. Harness: Instrument Panel, Cabin |
| 19 | B2293 (23) | Driver Air Bag Front - Stage 2 Short Circuit to Ground | Harness: Instrument Panel. Cabin. Clockspring. Connector: FC042, CA114. Driver Air Bag Front |
| 19 | B2293 (28) | Driver Air Bag Front - Stage 1 Squib Low Resistance | Connector: FC117, SW011. Clockspring. Connector: FC042, CA114, Driver Air Bag Front. Harness: Instrument Panel, Cabin |
| 19 | B2293 (29) | Driver Air Bag Front - Stage 1 Open Circuit | Connector: FC117, SW011. Clockspring. Connector: FC042, CA114, Driver Air Bag Front. Harness: Instrument Panel, Cabin |
| 19 | B2293 (30) | Driver Air Bag Front - Stage 1 Short to Power | Clock Spring. Connector: FC117, SW011, FC042, CA114. Harness: Instrument Panel, Cabin |
| 19 | B2293 (31) | Driver Air Bag Front - Stage 1 Short to Ground | Harness: Instrument Panel. Cabin. Clockspring. Connector: FC042, CA114. Driver Air Bag Front |
| 21 | B2293 (24) | Passenger Air Bag Front - Stage 1 Squib Low Resistance | Connector: FC032, FC025, CA114. Passenger Air Bag Front. Harness: Instrument Panel, Cabin |
| 21 | B2293 (25) | Passenger Air Bag Front - Stage 1 Open Circuit | Connector: FC032, FC025, CA114. Passenger Air Bag Front. Harness: Instrument Panel, Cabin |
| 21 | B2293 (26) | Passenger Air Bag Front - Stage 1 Short to Power | Connector: FC032, FC025, CA114. Passenger Air Bag Front. Harness: Instrument Panel, Cabin |
| 21 | B2293 (27) | Passenger Air Bag Front - Stage 1 Short to Ground | Harness: Instrument Panel. Cabin. Connector: FC032, FC025, CA114. Passenger Air Bag Front |
| 21 | B2293 (16) | Passenger Air Bag Front - Stage 2 Squib Low Resistance | Connector: FC046, FC025, CA114. Passenger Air Bag Front. Harness: Instrument Panel, Cabin |
| 21 | B2293 (17) | Passenger Air Bag Front - Stage 2 Open Circuit | Connector: FC046, FC025, CA114. Passenger Air Bag Front. Harness: Instrument Panel, Cabin |
| 21 | B2293 (18) | Passenger Air Bag Front - Stage 2 Short to Power | Connectors: FC046, FC025, CA114. Harness: Instrument Panel, Cabin |
| 21 | B2293 (19) | Passenger Air Bag Front - Stage 2 Short to Ground | Harness: Instrument Panel. Cabin. Connector: FC046, FC025, CA114. Passenger Air Bag Front |

GETtheMANUALS.org

**Seat Side Air Bags**

CAUTION: If the RCM has been identified as being faulty and requires replacement, any additional faults within the SRS system MUST be repaired and DTCs cleared BEFORE replacing the RCM. Replacing the RCM before rectifying other faults will cause the new RCM to remain in delivery mode. In this state, the module's diagnostic features are not accessible

| Flash Code | DTC (PID code) | Fault Description | Possible Causes |
|---|---|---|---|
| 22 | B2295 (28) | Driver Seat Side Air Bag Squib - Low Resistance | Connector: DB004, DM40, CA232. Driver Air Bag Side. Harness: Seat, Cabin |
| 22 | B2295 (29) | Driver Seat Side Air Bag - Open Circuit | Connector DB004, DM40, CA232: Driver Air Bag Side. Harness: Seat, Cabin |
| 22 | B2295 (30) | Driver Seat Side Air Bag - Short to Ground | Harness: Seat, Cabin. Connector: DB004, DM40, CA232 Driver Air Bag Side |
| 22 | B2295 (31) | Driver Seat Side Air Bag - Short to Power | Connector: DB004, DM40, CA232 Harness: Seat, Cabin |
| 23 | B2295 (24) | Passenger Seat Side Air Bag Squib - Low Resistance | Connector: PB004, PN35 CA232. Passenger Air Bag Side Harness: Seat, Cabin |
| 23 | B2295 (25) | Passenger Seat Side Air Bag - Open Circuit | Connector: PB004, PN35 CA232. Passenger Air Bag Side. Harness: Seat, Cabin |
| 23 | B2295 (26) | Passenger Seat Side Air Bag - Short to Ground | Harness: Seat, Cabin. Connector: PB004, PN35 CA232 Passenger Air Bag Side |
| 23 | B2295 (27) | Passenger Seat Side Air Bag - Short to Power | Connector: PB004, PN35 CA232. Harness: Seat, Cabin |

**Side Air Curtain**

CAUTION: If the RCM has been identified as being faulty and requires replacement, any additional faults within the SRS system MUST be repaired and DTCs cleared BEFORE replacing the RCM. Replacing the RCM before rectifying other faults will cause the new RCM to remain in delivery mode. In this state, the module's diagnostic features are not accessible

| Flash Code | DTC (PID code) | Fault Description | Possible Causes |
|---|---|---|---|
| 24 | B2294 (28) | Driver Side Air Curtain Squib - Low Resistance | Connector: CA226, CA232. Driver Side Air Curtain. Harness: Cabin |
| 24 | B2294 (29) | Driver Side Air Curtain - Open Circuit | Connector: CA226, CA232. Driver Side Air Curtain. Harness: Cabin |
| 24 | B2294 (30) | Driver Side Air Curtain - Short to Ground | Harness: Cabin. Connector: CA226, CA232. Driver Side Air Curtain |
| 24 | B2294 (31) | Driver Side Air Curtain - Short to Power | Connector: CA226, CA232. Harness: Cabin |
| 25 | B2294 (24) | Passenger Side Air Curtain Squib - Low Resistance | Connector: CA228, CA232. Passenger Side Air Curtain. Harness: Cabin |
| 25 | B2294 (25) | Passenger Side Air Curtain - Open Circuit | Connector: CA228, CA232. Passenger Side Air Curtain. Harness: Cabin |
| 25 | B2294 (26) | Passenger Side Air Curtain - Short to Ground | Harness: Cabin. Connector: CA228, CA232. Passenger Side Air Curtain |
| 25 | B2294 (27) | Passenger Side Air Curtain - Short to Power | Connector: CA228, CA232. Harness: Cabin |

**Safety Belt Pretensioners**

CAUTION: If the RCM has been identified as being faulty and requires replacement, any additional faults within the SRS system MUST be repaired and DTCs cleared BEFORE replacing the RCM. Replacing the RCM before rectifying other faults will cause the new RCM to remain in delivery mode. In this state, the module's diagnostic features are not accessible

| Flash Code | DTC (PID code) | Fault Description | Possible Causes |
|---|---|---|---|
| 33 | B2292 (28) | Driver Pretensioner Front - Short to Ground | Harness: Seat, Cabin. Connector: DM020, DM040, CA232. Driver Pretensioner Front |
| 33 | B2292 (29) | Driver Pretensioner Front - Short to Power | Connector: DM020, DM040, CA232. Harness: Seat, Cabin |
| 33 | B2292 (30) | Driver Pretensioner Front - Open Circuit | Connector: DM020, DM040, CA232. Driver Pretensioner Front. Harness: Seat, Cabin |
| 33 | B2292 (31) | Driver Pretensioner Squib Front - Low Resistance | Connector: DM020, DM040, CA232. Driver Pretensioner Front. Harness: Seat, Cabin |
| 34 | B2292 (24) | Passenger Pretensioner Front - Short to Ground | Harness: Seat, Cabin. Connector, PN015, DN035, CA232. Passenger Pretensioner, Front |
| 34 | B2292 (25) | Passenger Pretensioner Front - Short to Power | Connector: PN015, DN035, CA232 Harness: Seat, Cabin |
| 34 | B2292 (26) | Passenger Pretensioner Front - Open Circuit | Connector: PN015, DN035, CA232. Passenger Pretensioner Front. Harness: Seat, Cabin |
| 34 | B2292 (27) | Passenger Pretensioner Squib Front - Low Resistance | Connector: PN015, DN035, CA232. Passenger Pretensioner Front. Harness: Seat, Cabin |
| 35 | B2292 (20) | Driver Pretensioner Rear - Short to Ground | Harness: Cabin. Connector: CA225, CA232. Driver Pretensioner Rear |
| 35 | B2292 (21) | Driver Pretensioner Rear - Short to Power | Connector: CA225, CA232. Harness: Cabin |
| 35 | B2292 (22) | Driver Pretensioner Rear - Open Circuit | Connector: CA225, CA232. Driver Pretensioner Rear Harness: Cabin |
| 35 | B2292 (23) | Driver Pretensioner Squib Rear - Low Resistance | Connector: CA225, CA232. Driver Pretensioner Rear Harness: Cabin |
| 36 | B2292 (12) | Center Pretensioner Squib Rear - Low Resistance | Connector: CA224, CA232. Center Pretensioner Rear. Harness: Cabin |
| 36 | B2292 (13) | Center Pretensioner Rear - Short to Ground | Harness: Cabin. Connector: CA224, CA232. Center Pretensioner Rear |
| 36 | B2292 (14) | Center Pretensioner Rear - Short to Power | Connector: CA224, CA232 Harness: Cabin |
| 36 | B2292 (15) | Center Pretensioner Rear - Open Circuit | Connector: CA224, CA232. Center Pretensioner Rear. Harness: Cabin |
| 37 | B2292 (16) | Passenger Pretensioner Rear - Short to Ground | Harness: Cabin. Connector: CA223, CA232. Passenger Pretensioner Rear |
| 37 | B2292 (17) | Passenger Pretensioner Rear - Short to Power | Connector: CA223, CA232. Harness: Cabin |
| 37 | B2292 (18) | Passenger Pretensioner Rear - Open Circuit | Connector: CA223, CA232. Passenger Pretensioner Rear. Harness: Cabin |
| 37 | B2292 (19) | Passenger Pretensioner Squib Rear - Low Resistance | Connector: CA223, CA232. Passenger Pretensioner Rear. Harness Cabin |

**Impact Sensors**

CAUTION: If the RCM has been identified as being faulty and requires replacement, any additional faults within the SRS system MUST be repaired and DTCs cleared BEFORE replacing the RCM. Replacing the RCM before rectifying other faults will cause the new RCM to remain in delivery mode. In this state, the module's diagnostic features are not accessible

GETTHEMANUALS.org

| Flash Code | DTC (PID code) | Fault Description | Possible Causes |
|---|---|---|---|
| 42 | B2296 (19) | Front Impact Sensor Mount/Communication Fault | Connector: FH102, FH002, CA232. Harness: Engine, Cabin. Impact sensor mount fixing loose. Front Impact Sensor |
| 43 | B2296 (31) | Driver Side Impact Sensor Front - Mount/Communication Fault | Connector: CA022, CA232. Harness: Cabin. Impact sensor mount fixing loose. Driver Side Impact Sensor Front |
| 44 | B2296 (29) | Passenger Side Impact Sensor Front - Mount/Communication Fault | Connector: CA058, CA232 Harness: Cabin. Impact sensor mount fixing loose. Passenger Side Impact Sensor Front |
| 45 | B2296 (27) | Driver Side Impact Sensor Rear - Mount/Communication Fault | Connector: CA230, CA232 Harness: Cabin Impact sensor mount fixing loose Driver Side Impact Sensor Rear |
| 46 | B2296 (25) | Passenger Side Impact Sensor Rear - Mount/Communication Fault | Connector: CA246, CA232. Harness: Cabin. Impact sensor mount fixing loose. Passenger Side Impact Sensor Rear |

**Occupant Classification System (OCS)**

CAUTION: If the RCM has been identified as being faulty and requires replacement, any additional faults within the SRS system MUST be repaired and DTCs cleared BEFORE replacing the RCM. Replacing the RCM before rectifying other faults will cause the new RCM to remain in delivery mode. In this state, the module's diagnostic features are not accessible

| Flash Code | DTC (PID code) | Fault Description | Possible Causes |
|---|---|---|---|
| 16 | B2290 (24) | Passenger OCS Sensing Element Fault Front | Passenger seat weight pressure sensor. Harness: Passenger seat weight pressure sensor. Connectors: PN041, PN037 |
| 16 | B2290 (26) | OCS Communication Fault | Connector: PN037, PN038, PN024, CA114. Harness: Seat, Cabin |
| 16 | B2290 (27) | OCS Module Fault | OCS Module |
| 16 | B2290 (29) | Passenger Safety Belt Tension Sensor Front - Short to Ground | Connector: PN042, PN037. Harness: Seat. Passenger Safety Belt Tension Sensor Front |
| 16 | B2290 (31) | Passenger Safety Belt Tension Sensor Front - Circuit Fault | Passenger Safety Belt Tension Sensor Front. Connector: PN042, PN037. Harness: Seat |

**Occupant Position System (OPS)**

CAUTION: If the RCM has been identified as being faulty and requires replacement, any additional faults within the SRS system MUST be repaired and DTCs cleared BEFORE replacing the RCM. Replacing the RCM before rectifying other faults will cause the new RCM to remain in delivery mode. In this state, the module's diagnostic features are not accessible

| Flash Code | DTC (PID code) | Fault Description | Possible Causes |
|---|---|---|---|
| 17 | B2291 (24) | Passenger OPS Sensor 4 (outer headliner/B pillar) - Sensor Fault | Connector: RF40, RF034, PN024, PN038. Passenger OPS Sensor 4. Harness: Roof, Seat |
| 17 | B2291 (25) | Passenger OPS Sensor 3 (A pillar) - Sensor Fault | Connector: CA251, RF024, PN038. Passenger OPS Sensor 3. Harness: Cabin, Seat |
| 17 | B2291 (26) | Passenger OPS Sensor 2 (instrument panel console) - Sensor Fault | Connector: FC114, FC003, FC033, PN024, PN038. Passenger OPS Sensor 2. Harness: Console Link, Instrument Console, Telematics, Seat |
| 17 | B2291 (27) | Passenger OPS Sensor 1 (center headliner) - Sensor Fault | Connector: RF041, RF034, PN024, PN038. Passenger OPS Sensor 1. Harness: Roof, Seat |
| 17 | B2291 (28) | Passenger OPS Calibration Fault | Clear Fault Code and Cycle Ignition |
| 17 | B2291 (29) | Passenger OPS Communications Fault | Clear Fault Code and Cycle Ignition |

**Front Safety Belt Buckle and Seat Track Position Switches**

CAUTION: If the RCM has been identified as being faulty and requires replacement, any additional faults within the SRS system MUST be repaired and DTCs cleared BEFORE replacing the RCM. Replacing the RCM before rectifying other faults will cause the new RCM to remain in delivery mode. In this state, the module's diagnostic features are not accessible

| Flash Code | DTC (PID code) | Fault Description | Possible Causes |
|---|---|---|---|
| 49 | C1981 | Driver Seat Track Position Switch - Open Circuit/Short to Power | Connector: DM041, DM023, CA232. Driver Seat Track Position Switch. Harness: Seat, Cabin |
| 49 | C1947 | Driver Seat Track Position Switch Front- Short to Ground | Harness: Seat Cabin Connector: DM041, DM023, CA232. Seat Track Position Switch |
| 49 | C1948 | Driver Seat Track Position Switch Front- Circuit Resistance out of Range | Driver Seat Track Position Switch. Connector: DM041, DM023, CA232 |
| 51 | B2691 | Driver Safety Belt Buckle Switch Front - Open Circuit/Short to Power | Connector: DM020, DM023, CA232. Driver Safety Belt Buckle Switch. Harness: Seat, Cabin |
| 51 | B2434 | Driver Safety Belt Buckle Switch Front - Short to Ground | Harness: Seat, Cabin. Connector: DM020, DM023, CA232. Driver Safety Belt Buckle Switch |
| 51 | B2435 | Driver Safety Belt Buckle Switch Front - Circuit Resistance out of Range | Driver Safety Belt Buckle Switch. Connector: DM020, DM023, CA232 |
| 52 | B2438 | Passenger Safety Belt Buckle Switch Front - Short to Ground | Harness: Seat, Cabin. Connector: PN015, PN024, CA232. Passenger Safety Belt Buckle Switch |
| 52 | B2692 | Passenger Safety Belt Buckle Switch Front - Open Circuit/Short to Power | Connector: PN015, PN024, CA232. Passenger Safety Belt Buckle Switch. Harness: Seat, Cabin |
| 52 | B2439 | Passenger Safety Belt Buckle Switch Front - Circuit Resistance out of Range | Passenger Safety Belt Buckle Switch. Connector: PN015, PN024, CA232 |

**Miscellaneous**

CAUTION: If the RCM has been identified as being faulty and requires replacement, any additional faults within the SRS system MUST be repaired and DTCs cleared BEFORE replacing the RCM. Replacing the RCM before rectifying other faults will cause the new RCM to remain in delivery mode. In this state, the module's diagnostic features are not accessible

| Flash Code | DTC (PID code) | Fault Description | Possible Causes |
|---|---|---|---|
| 14 | B1921 | Restraint Control Module - Open Circuit or High Resistance on Bracket Ground | Restraint Control Module Fixings Loose. Restraint Control Module |
| 18 | B1884 | Passenger Air Bag Deactivation (PAD) Warning Indicator - Open Circuit (PAD warning indicator OFF) | Connector: FC112, FC037, FC033, CA114. PAD Lamp. Harness: Cabin, Instrument Panel |

GETtheMANUALS.org

| | | | |
|---|---|---|---|
| 18 | B1884 | PAD Warning Indicator - Short to Ground (PAD warning indicator ON) | Harness: Cabin, Instrument Panel. Connector: FC112, FC003, CA114 |
| 18 | B1890 | PAD Warning Indicator - Short To Power (PAD warning indicator OFF) | Connector: FC112, FC003, CA114. Harness: Cabin, Instrument Panel |
| 53 | B1891 | Air Bag Audible Warning - Short to Power | Harness: Cabin, Instrument Panel. Connector: FC014. FC026, CA114 |
| 53 | B1892 | Air Bag Audible Warning - Short to Ground or Open Circuit | Connector: FC014, FC026, CA114. Harness: Cabin, Instrument Panel |
| ON | B1317 | Power Voltage High | Charging system |
| ON | B1318 | Power Voltage Low | |
| ON | B1870 | Air Bag Warning Indicator - Short To Power | Connector: FC014, FC026, CA114. Harness: Instrument Panel, Cabin |
| ON | B1869 | Air Bag Warning Indicator - Open Circuit | Connector: FC014, FC026, CA114. Harness: Instrument Panel, Cabin |
| OFF | B1869 | Air Bag Warning Indicator - Short to Ground | Harness: Instrument Panel, Cabin. Connector: FC014, FC026, CA114 |
| ON | N/A | Feed to Restraint Control Module Open Circuit/Short to Ground (unable to communicate with module) | Fuse 05 (10 A) blown or missing - Passenger Junction Fuse Box |
| 12 | B1342 | Restraint Control Module - Internal Failure | Restraint Control Module - Fixing Loose. Power Voltage out of Range. Ground Points: CA014. Restraint Control Module |

**Component Replacement**

CAUTION: If the RCM has been identified as being faulty and requires replacement, any additional faults within the SRS system MUST be repaired and DTCs cleared BEFORE replacing the RCM. Replacing the RCM before rectifying other faults will cause the new RCM to remain in delivery mode. In this state, the module's diagnostic features are not accessible

| Flash Code | DTC (PID code) | Fault Description | Possible Causes |
|---|---|---|---|
| 13 | B1231 | Crash Data Memory Full | Clear Fault Code and Cycle Ignition, If DTC can't be cleared, replace the RCM |
| 15 | C1414 | RCM Version Conflicts with OCS | Restraint Control Module or OCS Service Kit |
| 16 | B2290 (25) | OCS Calibration Fault | OCS Service Kit |
| 16 | B2290 (27) | Generic OCS Module Fault | |
| 17 | B2291 (30) | Generic OPS Module Fault | OPS Control Module |
| 42 | B2296 (18) | Front Impact Sensor - Internal Fault | Front Impact Sensor |
| 43 | B2296 (30) | Driver Side Impact Sensor Front - Internal Fault | Driver Side Impact Sensor Front |
| 44 | B2296 (28) | Passenger Side Impact Sensor Front - Internal Fault | Passenger Side Impact Sensor Front |
| 45 | B2296 (26) | Driver Side Impact Sensor Rear - Internal Fault | Driver Side Impact Sensor Rear |
| 46 | B2296 (24) | Passenger Side Impact Sensor Rear - Internal Fault | Passenger Side Impact Sensor Rear |

GETtheMANUALS.org

# Supplemental Restraint System - Air Bag Disposal

General Procedures

## Deployed Air Bag

**1.** WARNING: Always wear safety glasses when repairing an air bag supplemental restraint system (SRS) vehicle and when handling an air bag module. Failure to follow this instruction may result in personal injury.

Deployed air bag modules are to be disposed of as special waste and must comply with local environmental requirements, if in doubt, contact Authority for disposal requirements.

**2.** NOTE: The storage, transportation, disposal, and/or recycling of air bag module components must be carried out in accordance with all applicable federal, state and local regulations including, but not limited to, those governing building and fire codes, environmental protection, occupational health and safety, and transportation.

Modules removed and deployed by Jaguar service are to be returned to the importer for disposal.

## Undeployed Air Bag — Inoperative

**1.** WARNING: Carry a live air bag module with the air bag and trim cover or deployment door pointed away from your body. This will reduce the risk of injury in the event of an accidental deployment. Failure to follow this instruction may result in personal injury.

• NOTE: All inoperative air bag modules have been placed on the Mandatory Return List. All discolored or damaged air bag modules must be treated the same as any inoperative live air bag being returned. Failure to follow this instruction may result in personal injury.

Remove the inoperative driver air bag module or passenger air bag module. For additional information Driver Air Bag Module or Passenger Air Bag Module in this section.

## Undeployed Air Bag — Scrapped Vehicle

### Remote Deployment

**1.** WARNINGS:

Always wear safety glasses when repairing an air bag supplemental restraint system (SRS) vehicle and when handling an air bag module. Failure to follow this instruction may result in personal injury.

Carry a live air bag module with the air bag and trim cover or deployment door pointed away from your body. This will reduce the risk of injury in the event of an accidental deployment. Failure to follow this instruction may result in personal injury.

Remote deployment is to be carried out outdoors with all personnel at least 6.1 meters (20 feet) away to ensure personal safety. Due to the loud report which occurs when the air bag is deployed, hearing protection is required. Failure to follow this instruction may result in personal injury.

Do not place the driver or passenger air bag module with the trim cover or deployment door facing down, as the forces of the deploying air bag can cause it to ricochet and cause personal injury. Failure to follow this instruction may result in personal injury.

Equipment required: Universal deployment tool-Part N° 418-135 and 12V Battery.

**2.** The deployment procedure should be carried out outdoors away from other personnel.

**3.** Remove any loose debris from around air bag. Make sure that no flammable liquids are present.

**4.** Disconnect the battery ground and positive cables.

**5.** Disconnect the relevant air bag module electrical connector.

**6.** Connect the appropriate adaptor lead to the restraint device.

**7.** Connect the deployment lead to the adaptor lead. Pass wire of the deployment tool through window, close all doors, leave window with lead for deployment tool open.

**8.** WARNING: Before proceeding, make sure precautions have been taken to warn personnel of a possible loud noise upon activation. Do not allow anybody to approach closer to restraint device than six meters. Failure to follow this instruction may result in personal injury.

GETtheMANUALS.org

Move as far from restraint device as possible and connect the tool clips to a 12V vehicle battery.

**9.** WARNING: Do not handle the deployed device immediately after activation - it may be hot. Allow the unit to cool for at least 20 minutes. Cooling modules should be continuously monitored to make sure heat does not create a fire with spilled liquids or other debris. Failure to follow this instruction may result in personal injury.

Deploy the module by depressing both switches on the tool. If activation does not occur, disconnect battery from tool and seek advise from Jaguar Engineering and wait for further instructions.

**10.** Repeat procedure for all air bags in vehicle.

**11.** The vehicle is now to be scrapped in the normal manner with modules installed.

## Disposal of live air bag modules for all air bags, using tyres

**1.** Equipment required: Deployment tool 418-S135, Battery (12V), Safety goggles to BS2092 grade 2, Rubber gloves to PrEN 374 class 2, Ear protectors that have been measured to BS.EN 24869, Particulate respirator to EN 149 grade FFP2S

**2.** The deployment procedure should be carried out outdoors, away from other personnel.

**3.** Stack four scrap tyres, securing together with heavy gauge wire or cable. while disconnected from any electrical power source, connect deployment harness and place air bag adaptor portion under tyre stack, ready for connection to air bag.

**4.** WARNING: Power must not be connected during this step. Failure to follow this instruction may result in personal injury.

CAUTION: Make sure the connector is not in contact with the inflator or it will be damaged during the test.

Connect air bag to air bag connector, make sure the locking sleeve is fully engaged. position the air bag with the cover facing upwards.

**5.** Make sure battery connections of deployment harness are ten meters away from the tyre stack

**6.** Remove any loose from around the air bag . Make sure that no flammable liquids are present.

**7.** WARNING: Before proceeding, make sure precautions have been taken to warn personnel of a possible loud noise upon activation. Do not allow anybody to approach closer to restraint device than six meters. Failure to follow this instruction may result in personal injury.

Move as far from restraint device as possible and connect the tool clips to a 12V vehicle battery.

**8.** WARNING: Do not handle the deployed device immediately after activation - it may be hot. Allow the unit to cool for at least 20 minutes. Cooling modules should be continuously monitored to make sure heat does not create a fire with spilled liquids or other debris. Failure to follow this instruction may result in personal injury.

Deploy the module by depressing both switches on the tool. If activation does not occur, disconnect battery from tool and seek advise from Jaguar Engineering and wait for further instructions.

**9.** Allow the air bag to cool for at least 20 minutes. Cooling modules should be continuously monitored to make sure heat generated a fire with spilled liquids or other debris.

**10.** Remove the air bag from the tyre stack and seal in a plastic bag, ready for disposal.

**11.** In the event of any problems or queries arising from this procedure, contact Jaguar Engineering.

GETtheMANUALS.org

# Supplemental Restraint System - B-Pillar Side Impact Sensor

Removal and Installation

## Removal

**1.** WARNINGS:

To avoid accidental deployment and possible personal injury, the backup power supply must be depleted before repairing or replacing any air bag supplementary restraints system (SRS) components. To deplete the backup power supply energy, disconnect the battery ground cable and wait for one minute. Failure to follow this instruction may result in personal injury.

Never probe the electrical connectors of the air bag modules or any other SRS component. Failure to follow this instruction may result in personal injury.

Reposition the front seat to the maximum forward position.

**2.** Disconnect the battery ground cable.
For additional information, refer to Section 414-01 Battery, Mounting and Cables.

**3.** Remove the B-pillar lower trim panel.
For additional information, refer to Section 501-05 Interior Trim and Ornamentation.

**4.** Detach the front seat belt retractor.

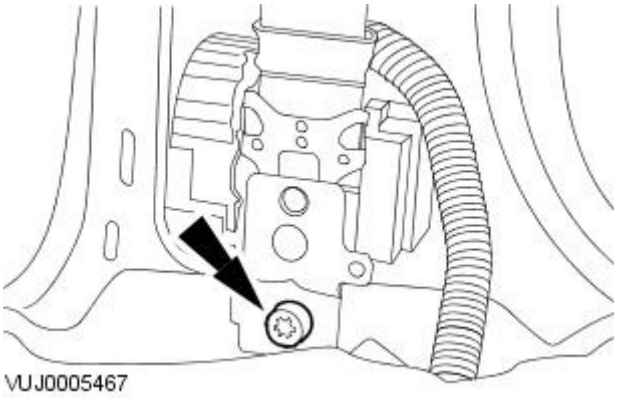


**5.** Disconnect the B-pillar side impact sensor electrical connector.

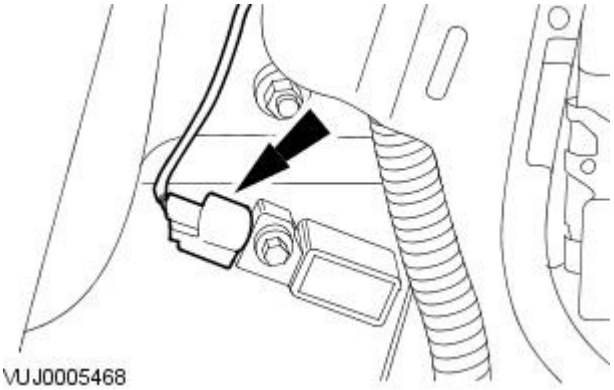


**6.** Remove the B-pillar side impact sensor.

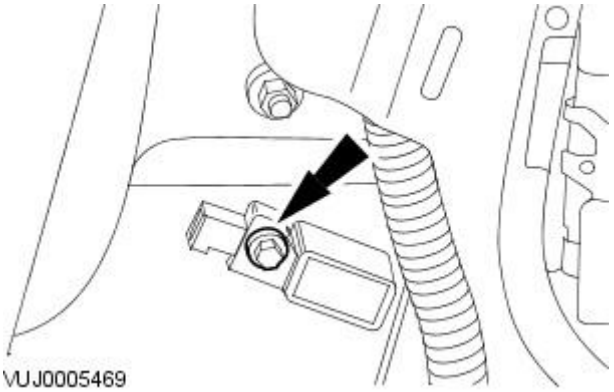


## Installation

GETtheMANUALS.org

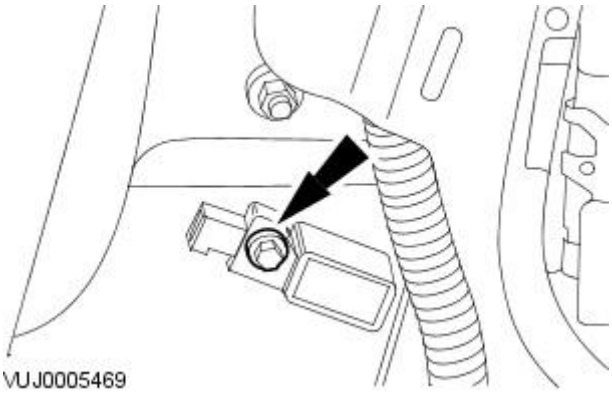


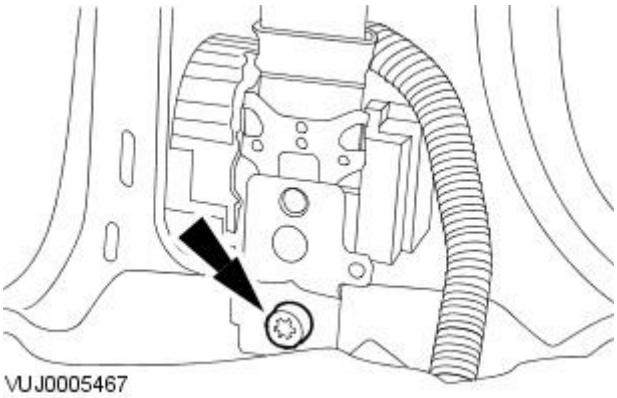


**1.** WARNINGS:

To avoid accidental deployment and possible personal injury, the backup power supply must be depleted before repairing or replacing any air bag SRS components. To deplete the backup power supply energy, disconnect the battery ground cable and wait for one minute. Failure to follow this instruction may result in personal injury.

Make sure the side impact sensor locating tangs are correctly located into the B-pillar. Failure to follow this instruction may result in personal injury.

Never probe the electrical connectors of the air bag modules or any other SRS component. Failure to follow this instruction may result in personal injury.

To install, reverse the removal procedure.

- Tighten to 12 Nm.

**2.** Tighten to 40 Nm.

GETtheMANUALS.org

# Supplemental Restraint System - Clockspring

Removal and Installation

## Removal

**1.** WARNINGS:

Always wear safety glasses when repairing an air bag supplemental restraint system (SRS) vehicle and when handling an air bag module.

Carry a live air bag module with the air bag and trim cover pointed away from your body. This will reduce the risk of injury in the event of an accidental deployment. Failure to follow this instruction may result in personal injury.

Do not set a live air bag module down with the trim cover face down. Failure to follow this instruction may result in personal injury.

After deployment, the air bag surface can contain deposits of sodium hydroxide, a product of the gas generant combustion that is irritating to the skin. Wash your hands with soap and water afterwards. Failure to follow this instruction may result in personal injury.

Never probe the connectors on the air bag module. Doing so may result in air bag deployment, which may result in personal injury. Failure to follow this instruction may result in personal injury.

Air bag modules with discolored or damaged trim covers must be replaced, not repainted.

Vehicle sensor orientation is critical for correct system operation. If a vehicle equipped with an air bag supplemental restraint system (SRS) is involved in a collision, inspect the sensor mounting bracket and wiring pigtail for deformation. If damaged, replace the sensor whether or not the air bag is deployed.

To avoid accidental deployment and possible personal injury, the backup power supply must be depleted before repairing or replacing any air bag supplemental restraint system (SRS) components. To deplete the backup power supply energy, disconnect the battery ground cable and wait one minute. Failure to follow this instruction may result in personal injury.

CAUTION: Make sure the wheels are in the straight-ahead position. Failure to follow this instruction may result in damage to the component.

• NOTE: Repair is made by replacement only. If a part is replaced and the new part does not correct the condition, install the original part and carry out the diagnostic procedure again.

Remove the steering wheel.
For additional information, refer to Section 211-04 Steering Column.
.

**2.** Remove the steering column multifunction switch left-hand.
For additional information, refer to Section 211-05 Steering Column Switches.

**3.** Remove the steering column multifunction switch right-hand.
For additional information, refer to Section 211-05 Steering Column Switches.

**4.** Disconnect the electrical connector.

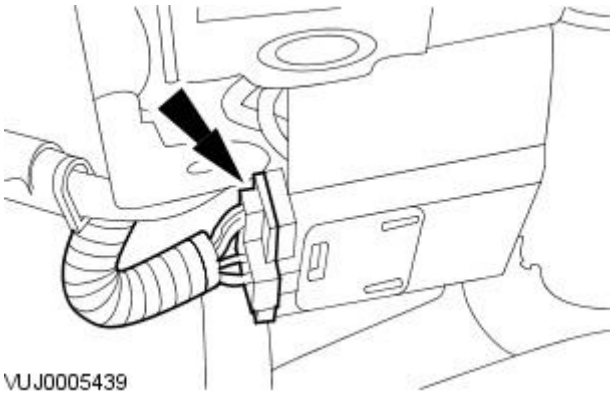


GETtheMANUALS.org

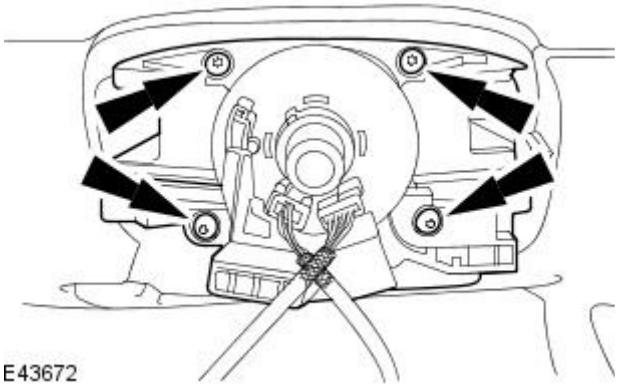


**5.** Remove the clockspring.

## Installation

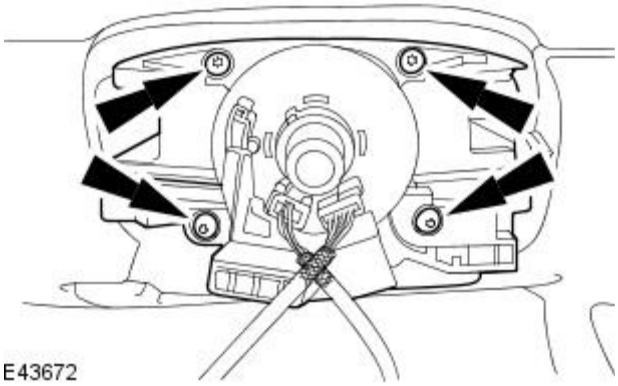


**1.** WARNINGS:

Always wear safety glasses when repairing an air bag supplemental restraint system (SRS) vehicle and when handling an air bag module. Failure to follow this instruction may result in personal injury.

Carry a live air bag module with the air bag and trim cover pointed away from your body. This will reduce the risk of injury in the event of an accidental deployment. Failure to follow this instruction may result in personal injury.

Never probe the connectors on the air bag module. Doing so may result in air bag deployment. Failure to follow this instruction may result in personal injury.

• CAUTIONS:

Make sure the locking tool is correctly installed to the clockspring. Failure to follow this instruction may result in damage to the component.

Make sure the wheels are in the straight-ahead position. Failure to follow this instruction may result in damage to the component.

• NOTE: A repair is made by replacement only. If a part is replaced and the new part does not correct the condition, install the original part and carry out the diagnostic procedure again.

To install, reverse the removal procedure.

- Tighten to 5 Nm.

GETtheMANUALS.org

# Supplemental Restraint System - C-Pillar Side Impact Sensor

Removal and Installation

## Removal

**1.** WARNINGS:

To avoid accidental deployment and possible personal injury, the backup power supply must be depleted before repairing or replacing any air bag supplementary restraints system (SRS) components. To deplete the backup power supply energy, disconnect the battery ground cable and wait for one minute. Failure to follow this instruction may result in personal injury.

Never probe the electrical connectors of the air bag modules or any other SRS component. Failure to follow this instruction may result in personal injury.

Disconnect the battery ground cable.
For additional information, refer to Section 414-01 Battery, Mounting and Cables.

**2.** Remove the rear seat bolster.
For additional information, refer to Section 501-10 Seating.

**3.** Disconnect the electrical connector.

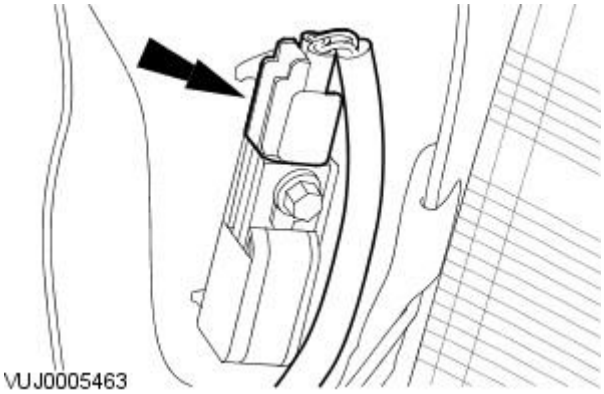


**4.** Remove the C-pillar side impact sensor.

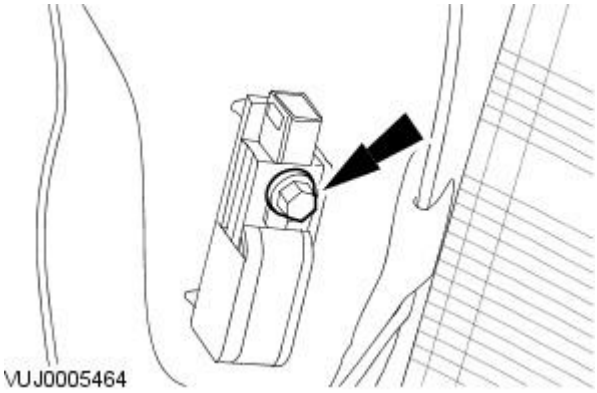


## Installation

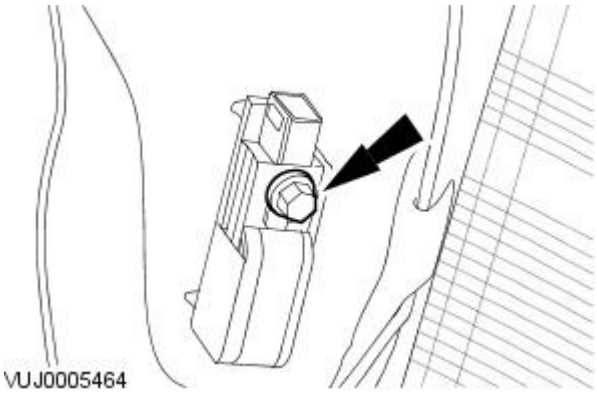


**1.** WARNINGS:

To avoid accidental deployment and possible personal injury, the backup power supply must be depleted before repairing or replacing any air bag SRS components. To deplete the backup power supply energy, disconnect the battery ground cable and wait for one minute. Failure to follow this instruction may result in personal injury.

Make sure the side impact sensor locating tangs are correctly located into the C-pillar. Failure to follow this instruction may result in personal injury.

Never probe the electrical connectors of the air bag modules or any other SRS component. Failure to follow this instruction may result in personal injury.

To install, reverse the removal procedure.

- Tighten to 12 Nm.

GETtheMANUALS.org

# Supplemental Restraint System - Crash Sensor

Removal and Installation

## Removal

**1.** WARNINGS:

To avoid accidental deployment and possible personal injury, the backup power supply must be depleted before repairing or replacing any air bag supplementary restraints system (SRS) components. To deplete the backup power supply energy, disconnect the battery ground cable and wait for one minute. Failure to follow this instruction may result in personal injury.

Never probe the electrical connectors of the air bag modules or any other SRS component. Failure to follow this instruction may result in personal injury.

Disconnect the battery ground cable.
For additional information, refer to Section 414-01 Battery, Mounting and Cables.

**2.** Remove the radiator opening panel.
For additional information, refer to Section 501-02 Front End Body Panels.

**3.** Disconnect the crash sensor electrical connector.

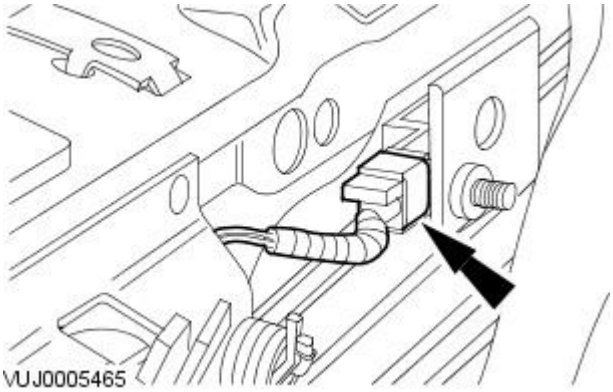


**4.** Remove the crash sensor.

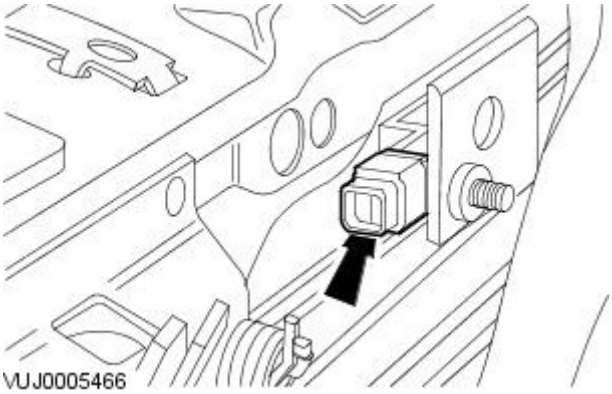


## Installation

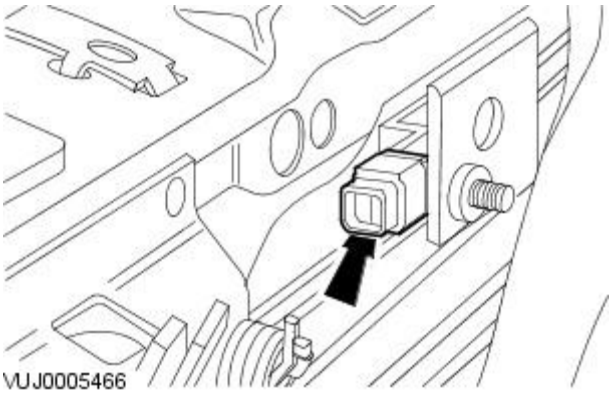


**1.** WARNINGS:

To avoid accidental deployment and possible personal injury, the backup power supply must be depleted before repairing or replacing any air bag SRS components. To deplete the backup power supply energy, disconnect the battery ground cable and wait for one minute. Failure to follow this instruction may result in personal injury.

Make sure the crash sensor locating tangs are correctly located into the mounting bracket. Failure to follow this instruction may result in personal injury.

Never probe the electrical connectors of the air bag modules or any other SRS component. Failure to follow this instruction may result in personal injury.

To install, reverse the removal procedure.

- Tighten to 12 Nm.

GETtheMANUALS.org

# Supplemental Restraint System - Driver Air Bag Module

Removal and Installation

## Removal

**1.** WARNINGS:

A restraints control module (RCM) only requires replacement if the system has incurred five separate deployments. At no time change the RCM for less than five separate deployments.

Always wear safety glasses when repairing an air bag supplemental restraint system (SRS) vehicle and when handling an air bag module. Failure to follow this instruction may result in personal injury.

Carry a live air bag module with the air bag and trim cover pointed away from your body. This will reduce the risk of injury in the event of an accidental deployment. Failure to follow this instruction may result in personal injury.

Do not set a live air bag module down with the trim cover face down. Failure to follow this instruction may result in personal injury.

After deployment, the air bag surface can contain deposits of sodium hydroxide, a product of the gas generant combustion that is irritating to the skin. Wash your hands with soap and water afterwards. Failure to follow this instruction may result in personal injury.

Never probe the connectors on the air bag module. Doing so may result in air bag deployment. Failure to follow this instruction may result in personal injury.

Vehicle sensor orientation is critical for correct system operation. If a vehicle equipped with an air bag SRS is involved in a collision, inspect the sensor mounting bracket and wiring pigtail for deformation. If damaged, replace the sensor whether or not the air bag is deployed.

To avoid accidental deployment and possible personal injury, the backup power supply must be depleted before repairing or replacing any air bag SRS components. To deplete the backup power supply energy, disconnect the battery ground cable and wait one minute. Failure to follow this instruction may result in personal injury.

• NOTE: Repair is made by replacement only. If a part is replaced and the new part does not correct the condition, install the original part and carry out the diagnostic procedure again.

• NOTE: When installing a new air bag module , a prepaid return postcard is provided with the replacement air bag module. The serial number for the new part and the vehicle identification number (VIN) must be recorded and sent to Jaguar Cars Ltd.

Disconnect the battery ground cable.
For additional information, refer to Section 414-01 Battery, Mounting and Cables.

**2.** Remove the instrument panel lower trim panel.

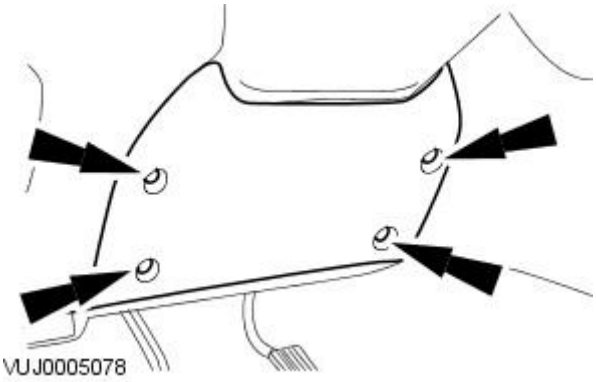


GETtheMANUALS.org

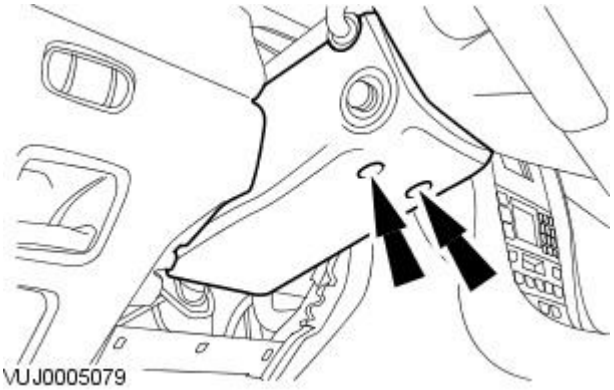


**3.** Detach the steering column lower shroud.

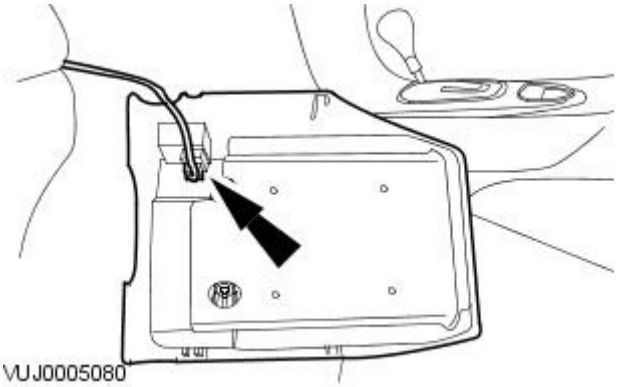


**4.** Remove the steering column lower shroud.

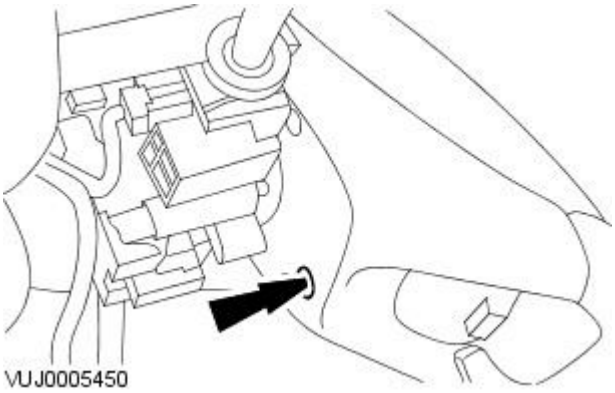


**5.** NOTE: Left-hand shown, right-hand similar.

Remove the driver air bag module retaining bolts.

**6.** Detach the driver air bag module.

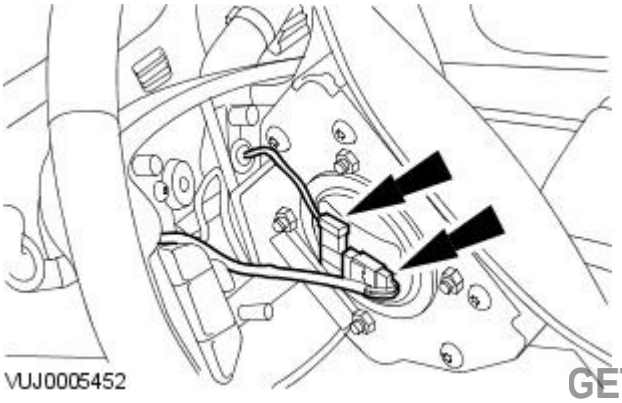


**7.** Remove the driver air bag module.

GETtheMANUALS.org

## Installation

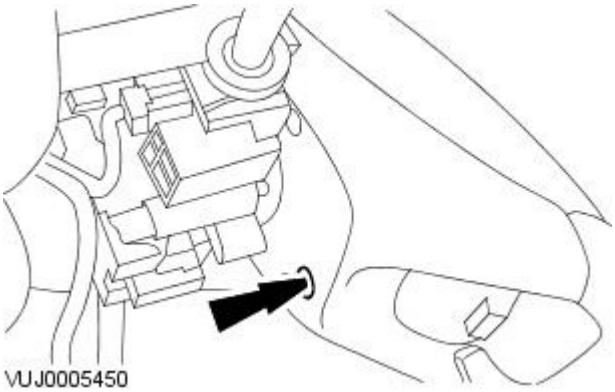


**1.** WARNINGS:

A restraints control module (RCM) only requires replacement if the system has incurred five separate deployments. At no time change the RCM for less than five separate deployments.

Always wear safety glasses when repairing an air bag supplemental restraint system (SRS) vehicle and when handling an air bag module. Failure to follow this instruction may result in personal injury.

Carry a live air bag module with the air bag and trim cover pointed away from your body. This will reduce the risk of injury in the event of an accidental deployment. Failure to follow this instruction may result in personal injury.

Do not set a live air bag module down with the trim cover face down. Failure to follow this instruction may result in personal injury.

After deployment, the air bag surface can contain deposits of sodium hydroxide, a product of the gas generant combustion that is irritating to the skin. Wash your hands with soap and water afterwards. Failure to follow this instruction may result in personal injury.

Never probe the connectors on the air bag module. Doing so may result in air bag deployment. Failure to follow this instruction may result in personal injury.

Vehicle sensor orientation is critical for correct system operation. If a vehicle equipped with an air bag SRS is involved in a collision, inspect the sensor mounting bracket and wiring pigtail for deformation. If damaged, replace the sensor whether or not the air bag is deployed.

To avoid accidental deployment and possible personal injury, the backup power supply must be depleted before repairing or replacing any air bag SRS components. To deplete the backup power supply energy, disconnect the battery ground cable and wait one minute. Failure to follow this instruction may result in personal injury.

• NOTE: Repair is made by replacement only. If a part is replaced and the new part does not correct the condition, install the original part and carry out the diagnostic procedure again.

• NOTE: When installing a new air bag module , a prepaid return postcard is provided with the replacement air bag module. The serial number for the new part and the vehicle identification number (VIN) must be recorded and sent to Jaguar Cars Ltd.

• NOTE: left-hand shown, right-hand similar.

To install, reverse the removal procedure.

- Tighten to 7 Nm.

GETtheMANUALS.org

# Supplemental Restraint System - Front Passenger Seat Occupant Classification Sensor

Removal and Installation

## Removal

• WARNINGS:

To avoid accidental deployment and possible personal injury, the back up power supply must be depleted before repairing or replacing any air bag supplemental restraint system (SRS) component. To deplete the back up power supply energy, disconnect the battery ground cable and wait one minute. Failure to follow this instruction may result in personal injury.

Never probe the electrical connectors of the air bag modules or any other SRS component. Failure to follow this instruction may result in personal injury.

The front passenger seat occupant classification sensor is available only as a service kit. No attempt should be made to replace individual components. Failure to follow this instruction may result in personal injury.

CAUTION: Electronic components in the seats are sensitive to impact. Handle seat with care or damage may result.

• NOTE: Repair is made by replacement only. If a part is replaced and the new part does not correct the condition, install the original part and carry out the diagnostic procedure again.

**1.** Remove the front seat cushion cover.
For additional information, refer to Section 501-10 Seating.

**2.** Detach the front passenger seat occupant classification sensor bladder.

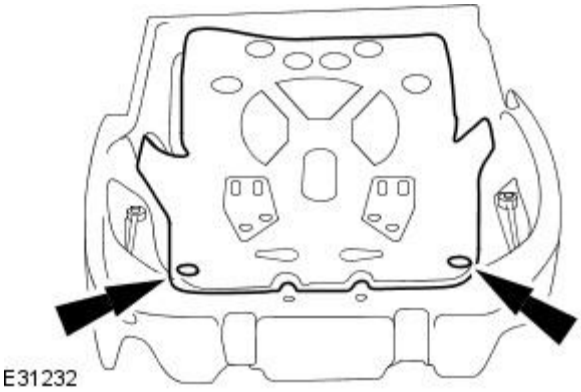


**3.** Detach the front passenger seat occupant classification sensor transducer.

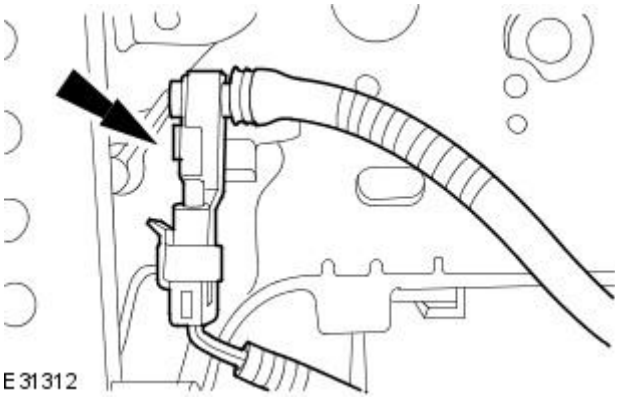


**4.** NOTE: Make sure the unused electrical connector is secured to the seat base.

Remove the front passenger seat occupant classification sensor bladder.

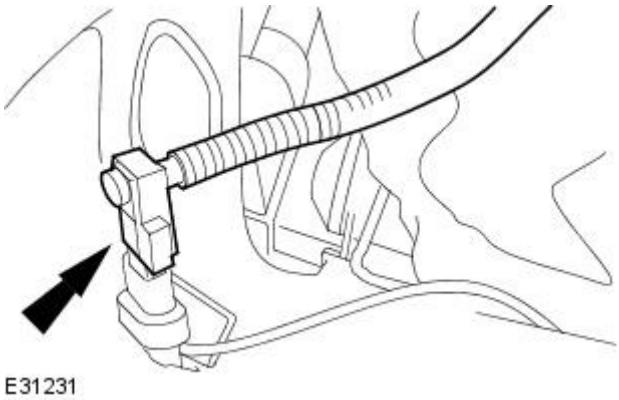


GETtheMANUALS.org

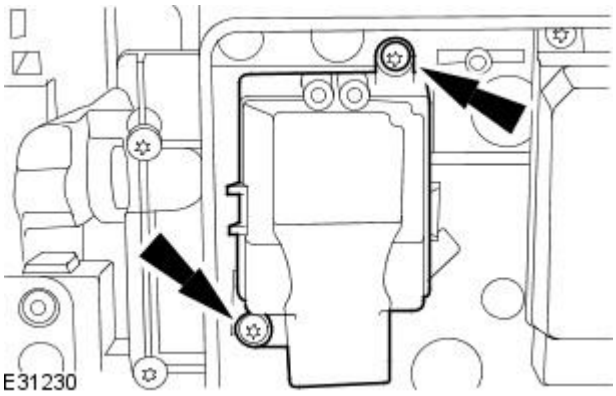


**5.** Remove the front passenger seat occupant classification sensor module shield.

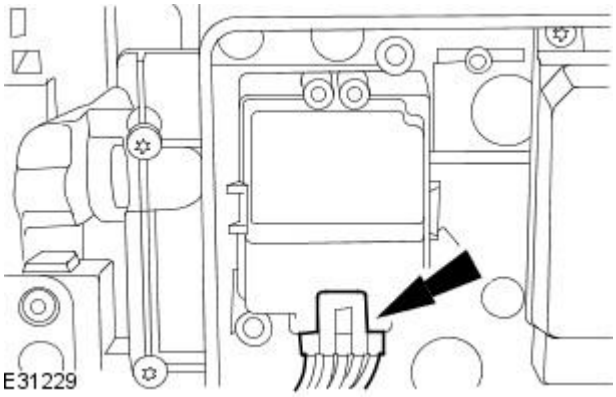


**6.** Remove the front passenger seat occupant classification sensor module.

## Installation

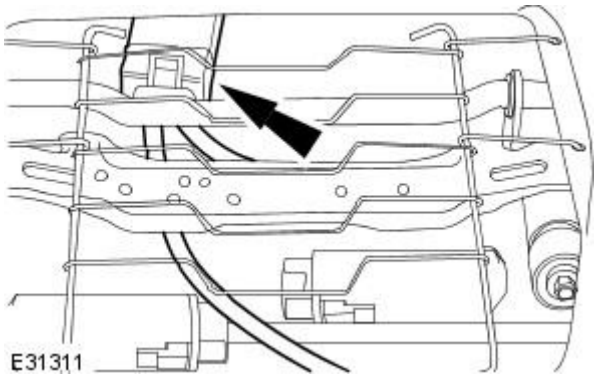


**1.** NOTE: The front passenger seat occupant classification sensor module must pass between the seat base and the first wire of the front seat suspension mat.

Reposition the front passenger seat occupant classification sensor module through the seat base.

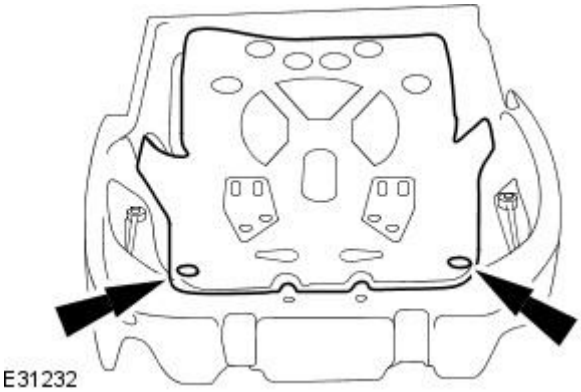


**2.** Install the front passenger seat occupant classification sensor bladder.

GETtheMANUALS.org

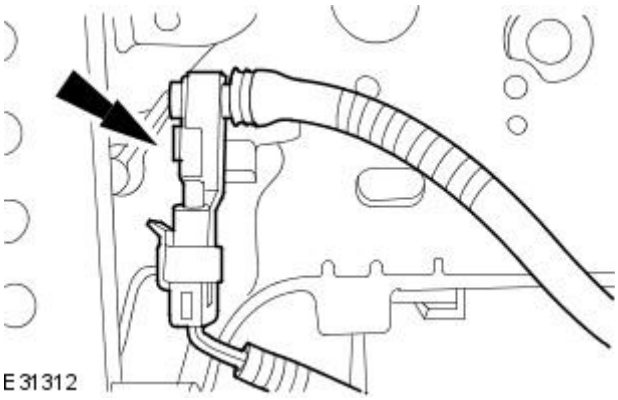


3. Attach the front passenger seat occupant classification sensor transducer.

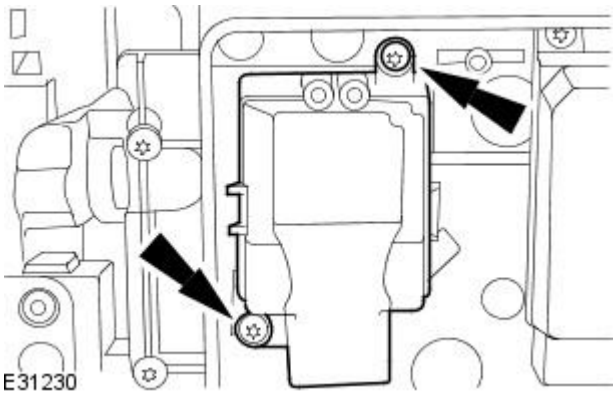


4. Install the front passenger seat occupant classification sensor module and shield.

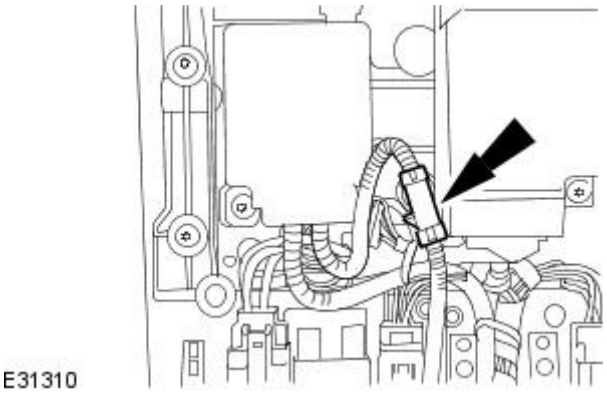


5. CAUTION: Make sure the front passenger seat occupant classification sensor wiring harness is loose enough to allow for the seat height adjustment. Failure to follow this instruction may result in damage to the component.

Connect the front passenger seat occupant classification sensor module electrical connector.

- Secure the front passenger seat occupant classification sensor wiring harness to the original seat wiring harness.

6. Install the front seat cushion cover.
For additional information, refer to Section 501-10 Seating.

7. Initialize the system. For additional information, refer to the Jaguar approved diagnostic system.

GETtheMANUALS.org

# Supplemental Restraint System - Passenger Air Bag Deactivation (PAD) Indicator

Removal and Installation

## Removal

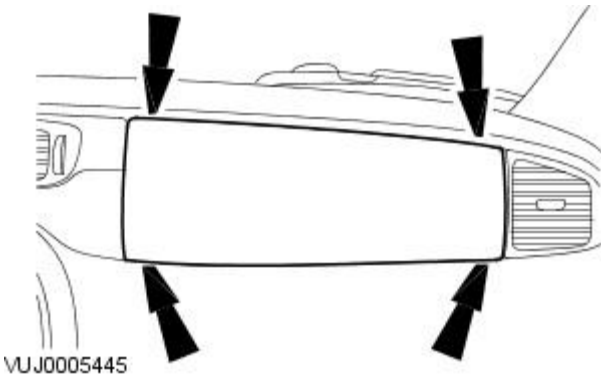


**1.** Detach the passenger air bag module finish panel.

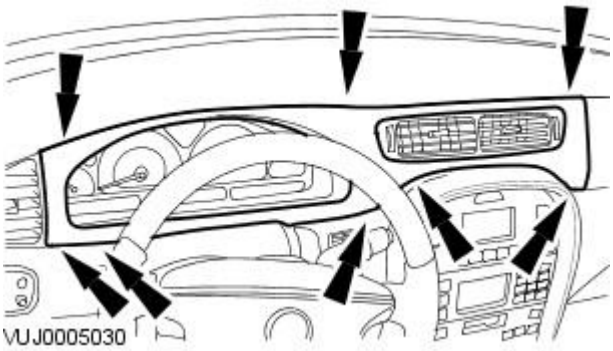


**2.** Remove the instrument panel finish panel.

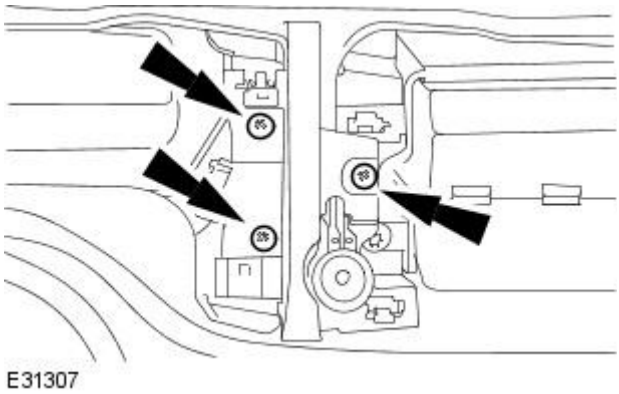


**3.** Detach the passenger air bag deactivation (PAD) indicator.

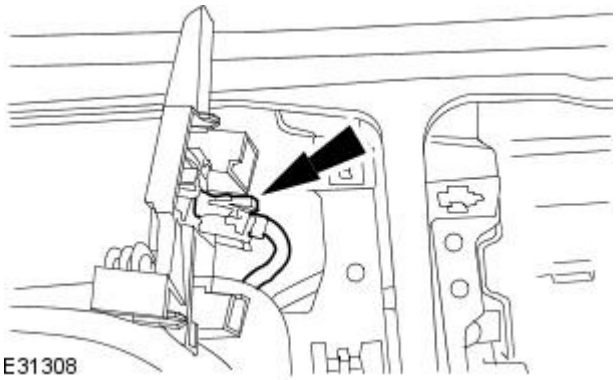


**4.** Remove the PAD indicator.

- Disconnect the electrical connector.

## Installation

**1.** To install, reverse the removal procedure.

GETtheMANUALS.org

# Supplemental Restraint System - Passenger Air Bag Module

Removal and Installation

## Removal

**1.** WARNINGS:

A restraints control module (RCM) only requires replacement if the system has incurred five separate deployments. At no time change the RCM for less than five separate deployments.

Always wear safety glasses when repairing an air bag supplemental restraint system (SRS) vehicle and when handling an air bag module. Failure to follow this instruction may result in personal injury.

Carry a live air bag module with the air bag and trim cover pointed away from your body. This will reduce the risk of injury in the event of an accidental deployment. Failure to follow this instruction may result in personal injury.

Do not set a live air bag module down with the trim cover face down. Failure to follow this instruction may result in personal injury.

After deployment, the air bag surface can contain deposits of sodium hydroxide, a product of the gas generant combustion that is irritating to the skin. Wash your hands with soap and water afterwards. Failure to follow this instruction may result in personal injury.

Never probe the connectors on the air bag module. Doing so may result in air bag deployment. Failure to follow this instruction may result in personal injury.

Vehicle sensor orientation is critical for correct system operation. If a vehicle equipped with an air bag SRS is involved in a collision, inspect the sensor mounting bracket and wiring pigtail for deformation. If damaged, replace the sensor whether or not the air bag is deployed.

To avoid accidental deployment and possible personal injury, the backup power supply must be depleted before repairing or replacing any air bag SRS components. To deplete the backup power supply energy, disconnect the battery ground cable and wait one minute. Failure to follow this instruction may result in personal injury.

• NOTE: Repair is made by replacement only. If a part is replaced and the new part does not correct the condition, install the original part and carry out the diagnostic procedure again.

• NOTE: When installing a new air bag module, a prepaid return postcard is provided with the replacement air bag module. The serial number for the new part and the vehicle identification number (VIN) must be recorded and sent to Jaguar Cars Ltd.

Disconnect the battery ground cable.
For additional information, refer to Section 414-01 Battery, Mounting and Cables.

**2.** Detach the passenger air bag module finish panel.

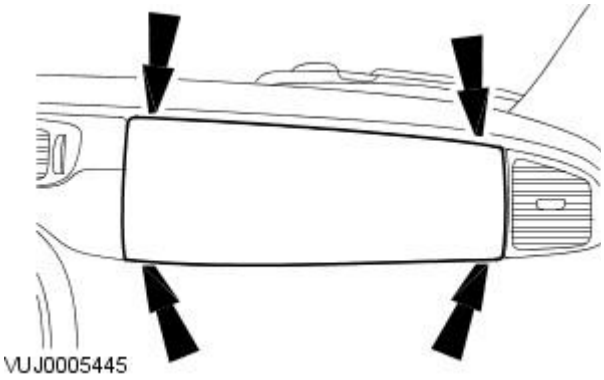


**3.** Remove the glove compartment assembly.
For additional information, refer to Section 501-12 Instrument Panel and Console.

GETtheMANUALS.org

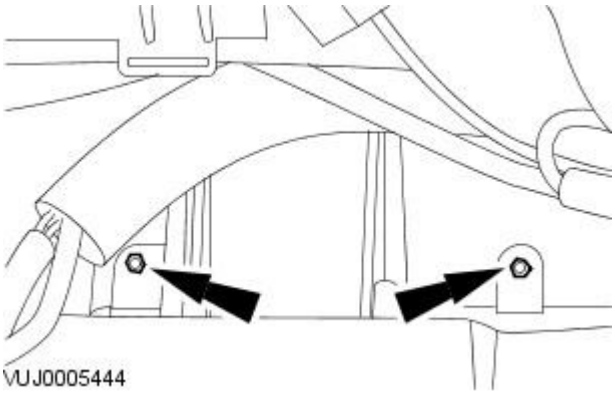


**4.** Remove the air bag chute lower retaining bolts.

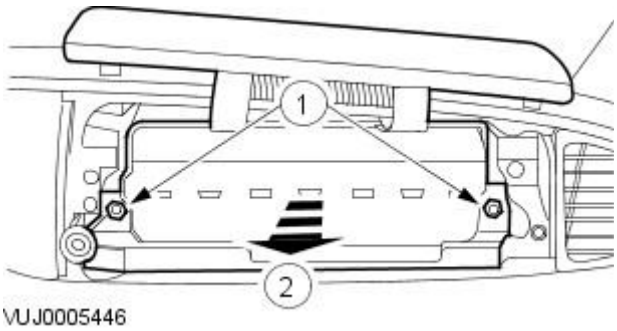


**5.** Detach the air bag and chute assembly from the instrument panel.

1. Remove the air bag chute retaining bolts.
2. Detach the air bag and chute assembly from the instrument panel.

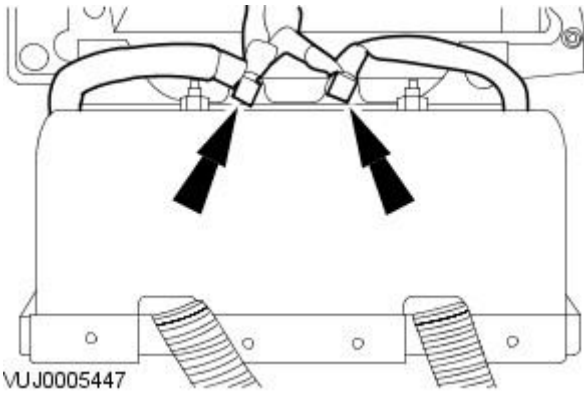


**6.** Detach the wiring harness.

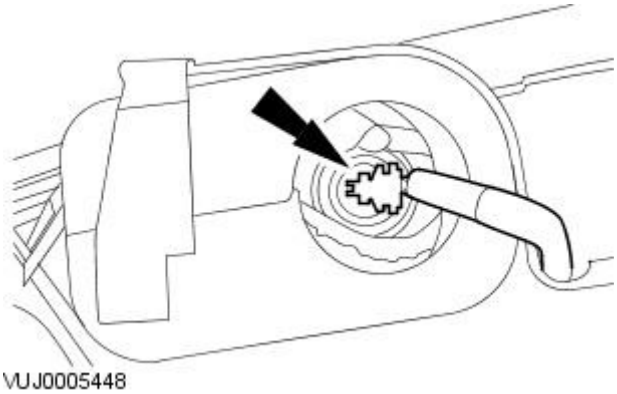


**7.** NOTE: Right-hand shown, left-hand similar.

Remove the passenger air bag and chute assembly.

- Disconnect the passenger air bag electrical connectors.

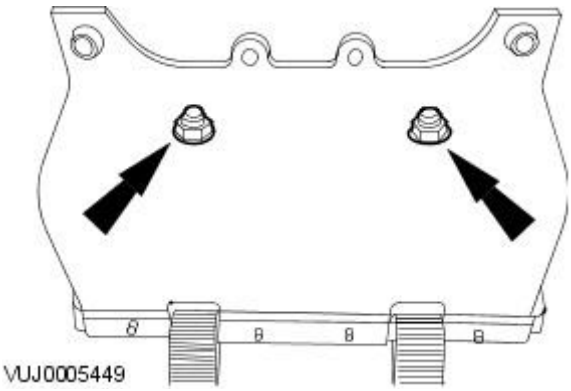


**8.** Remove the passenger air bag from the chute.

GETtheMANUALS.org

**Installation**

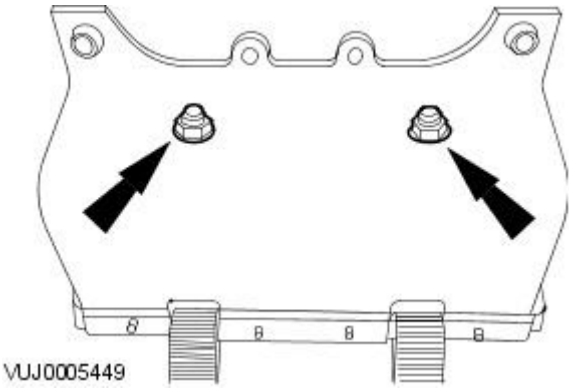


**1.** WARNINGS:

An RCM module only requires replacement if the system has incurred five separate deployments. At no time change an RCM for less than five separate deployments.

Always wear safety glasses when repairing an air bag SRS vehicle and when handling an air bag module. Failure to follow this instruction may result in personal injury.

Carry a live air bag module with the air bag and deployment door pointed away from your body. This will reduce the risk of injury in the event of an accidental deployment.

Never probe the connectors on the air bag module. Doing so may result in air bag deployment. Failure to follow this instruction may result in personal injury.

• NOTE: Repair is made by replacement only. If a part is replaced and the new part does not correct the condition, install the original part and carry out the diagnostic procedure again.

• NOTE: Make sure to tighten the retaining bolts to the correct specification.

To install, reverse the removal procedure.

- Tighten to 12 Nm.

**2.** Tighten to 9 Nm.

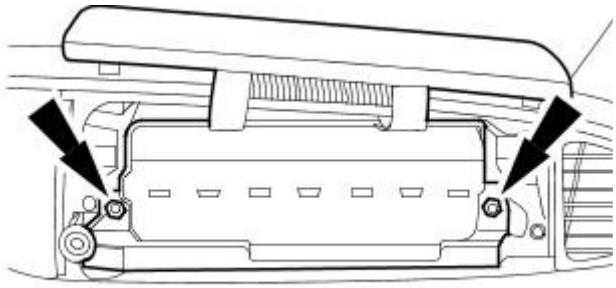


**3.** Tighten to 9 Nm.

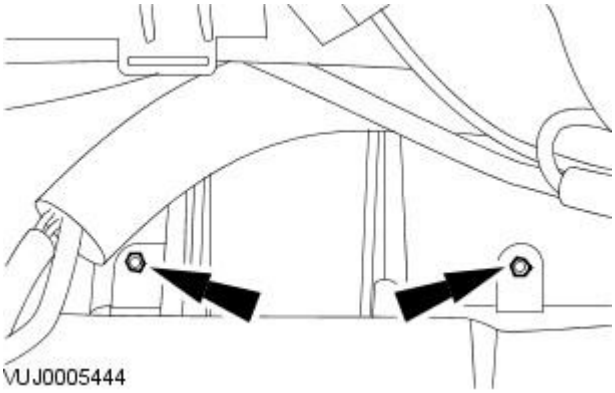


GETtheMANUALS.org

# Supplemental Restraint System - Restraints Control Module (RCM)

Removal and Installation

## Removal

**1.** WARNINGS:

To avoid accidental deployment and possible personal injury, the backup power supply must be depleted before repairing or replacing any air bag supplemental restraint system (SRS) components. To deplete the backup power supply energy, disconnect the battery ground cable and wait one minute. Failure to follow this instruction may result in personal injury.

A restraints control module (RCM) only requires replacement if the system has incurred five separate deployments. At no time change the RCM for less than five separate deployments.

CAUTION: Electronic modules are sensitive to static electrical charges. If exposed to these charges, damage may result.

• NOTE: Repair is made by replacement only. If a part is replaced and the new part does not correct the condition, install the original part and carry out the diagnostic procedure again.

Disconnect the battery ground cable.
For additional information, refer to: Battery Disconnect and Connect (414-01 Battery, Mounting and Cables, General Procedures).

**2.** Remove the floor console register duct.
For additional information, refer to: Floor Console Register Duct (412-01 Air Distribution and Filtering, Removal and Installation).
.

**3.** Remove the floor console register duct connector retaining screw.

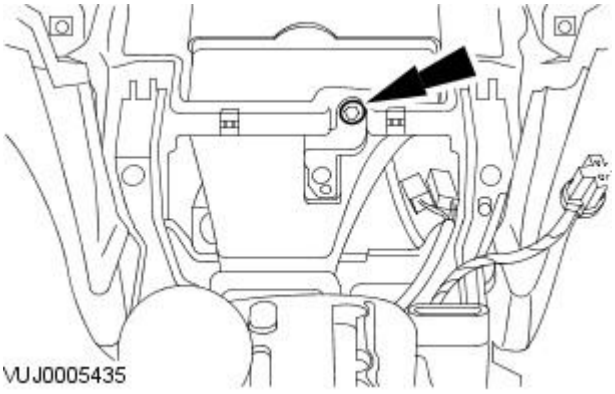


**4.** Remove the plenum to floor console register duct connector.

1. Detach the plenum to floor console register duct connector.
2. Remove the plenum to floor console register duct connector.

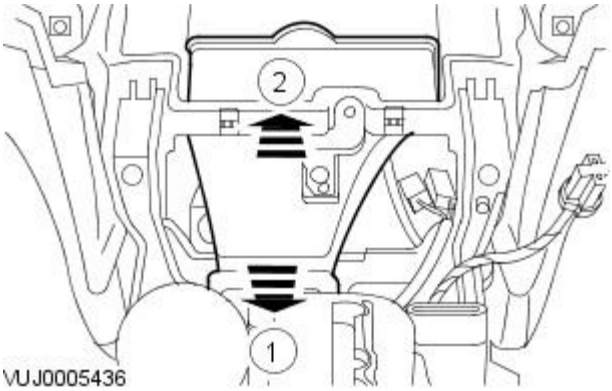


**5.** Disconnect the RCM electrical connectors.

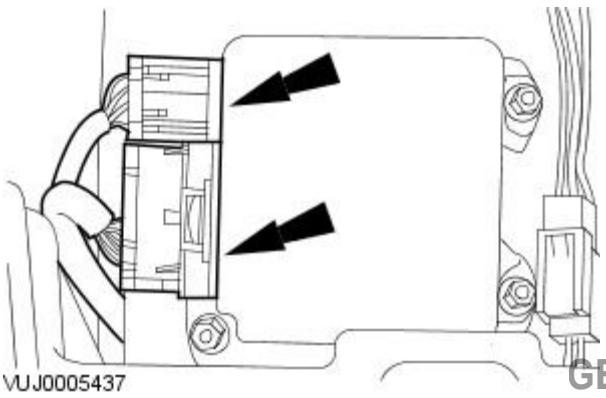


GETtheMANUALS.org

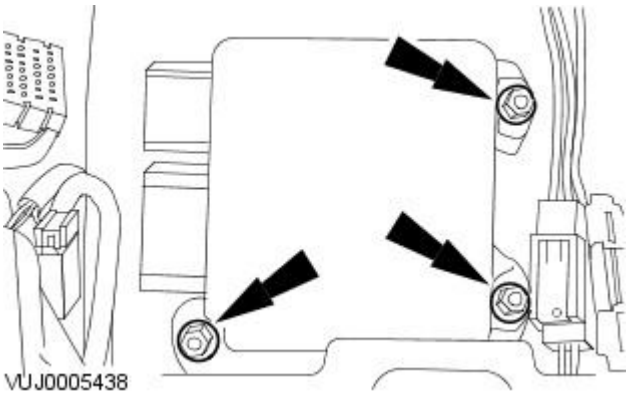


**6.** Remove the RCM.

## Installation

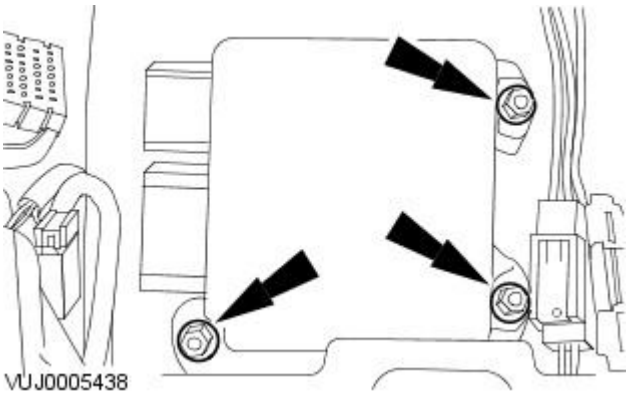


**1.** WARNINGS:

To avoid accidental deployment and possible personal injury, the backup power supply must be depleted before repairing or replacing any air bag supplemental restraint system (SRS) components. To deplete the backup power supply energy, disconnect the battery ground cable and wait one minute. Failure to follow this instruction may result in personal injury.

A restraints control module (RCM) only requires replacement if the system has incurred five separate deployments. At no time change the RCM for less than five separate deployments.

CAUTION: Electronic modules are sensitive to static electrical charges. If exposed to these charges, damage may result.

• NOTE: Repair is made by replacement only. If a part is replaced and the new part does not correct the condition, install the original part and carry out the diagnostic procedure again.

To install, reverse the removal procedure.

- Tighten to 12 Nm.

GETtheMANUALS.org

# Supplemental Restraint System - Seat Position Sensor

Removal and Installation

## Removal

**1.** WARNINGS:

To avoid accidental deployment and possible personal injury, the backup power supply must be depleted before repairing or replacing any air bag supplementary restraints system (SRS) components. To deplete the backup power supply energy, disconnect the battery ground cable and wait for one minute. Failure to follow this instruction may result in personal injury.

Never probe the electrical connectors of the air bag modules or any other SRS component. Failure to follow this instruction may result in personal injury.

• NOTE: Make sure the driver seat is adjusted to its maximum height before removal.

Remove the driver seat.
For additional information, refer to Section 501-10 Seating.

**2.** Disconnect the seat position sensor electrical connector.

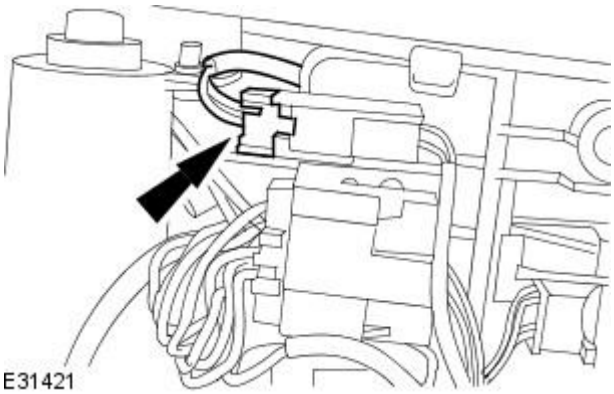

E31421

**3.** Remove the seat position sensor.

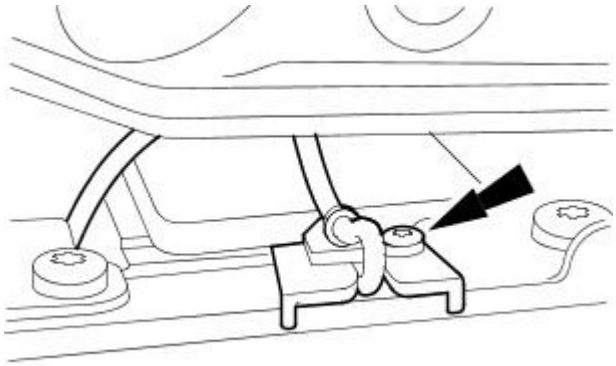

E31422

## Installation

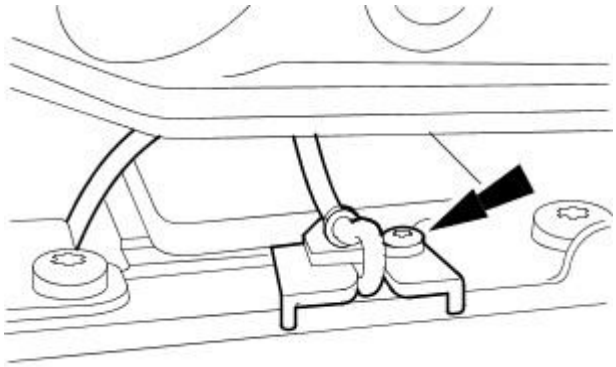

E31422

**1.** WARNINGS:

To avoid accidental deployment and possible personal injury, the backup power supply must be depleted before repairing or replacing any air bag SRS components. To deplete the backup power supply energy, disconnect the battery ground cable and wait for one minute. Failure to follow this instruction may result in personal injury.

Never probe the electrical connectors of the air bag modules or any other SRS component. Failure to follow this instruction may result in personal injury.

Make sure the sensor is correctly located into the seat track. Failure to follow this instruction may result in personal injury.

To install, reverse the removal procedure.

- Tighten to 5 Nm.

GETtheMANUALS.org

# Supplemental Restraint System - Side Air Bag Module

Removal and Installation

## Removal

**1.** WARNINGS:

A restraints control module (RCM) only requires replacement if the system has incurred five separate deployments. At no time change the RCM for less than five separate deployments.

Always wear safety glasses when repairing an air bag supplemental restraint system (SRS) vehicle and when handling an air bag module. Failure to follow this instruction may result in personal injury.

Carry a live air bag module with the air bag and trim cover pointed away from your body. This will reduce the risk of injury in the event of an accidental deployment. Failure to follow this instruction may result in personal injury.

Do not set a live air bag module down with the trim cover face down. Failure to follow this instruction may result in personal injury.

After deployment, the air bag surface can contain deposits of sodium hydroxide, a product of the gas generant combustion that is irritating to the skin. Wash your hands with soap and water afterwards. Failure to follow this instruction may result in personal injury.

Never probe the connectors on the air bag module. Doing so may result in air bag deployment. Failure to follow this instruction may result in personal injury.

Vehicle sensor orientation is critical for correct system operation. If a vehicle equipped with an air bag SRS is involved in a collision, inspect the sensor mounting bracket and wiring pigtail for deformation. If damaged, replace the sensor whether or not the air bag is deployed.

To avoid accidental deployment and possible personal injury, the backup power supply must be depleted before repairing or replacing any air bag SRS components. To deplete the backup power supply energy, disconnect the battery ground cable and wait one minute. Failure to follow this instruction may result in personal injury.

• NOTE: Repair is made by replacement only. If a part is replaced and the new part does not correct the condition, install the original part and carry out the diagnostic procedure again.

• NOTE: When installing a new air bag module, a prepaid return postcard is provided with the replacement air bag module. The serial number for the new part and the vehicle identification number (VIN) must be recorded and sent to Jaguar Cars Ltd.

Remove the front seat.
For additional information, refer to Section 501-10 Seating.

**2.** Remove the head restraint.

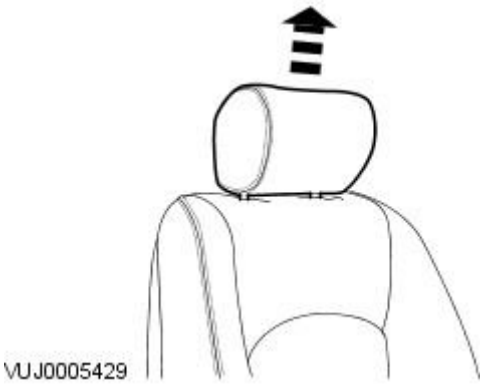


GETtheMANUALS.org

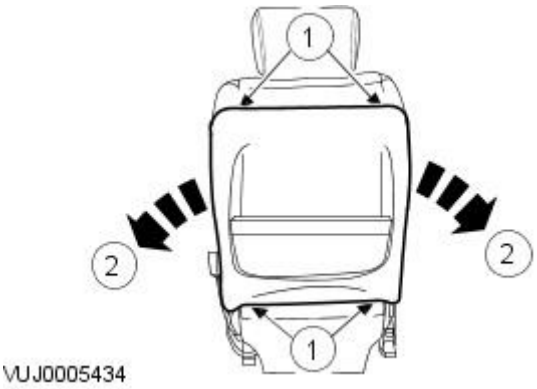


**3.** Remove the front seat backrest trim panel.

1. Detach the front seat backrest trim panel retaining clips.
2. Remove the front seat backrest trim panel.

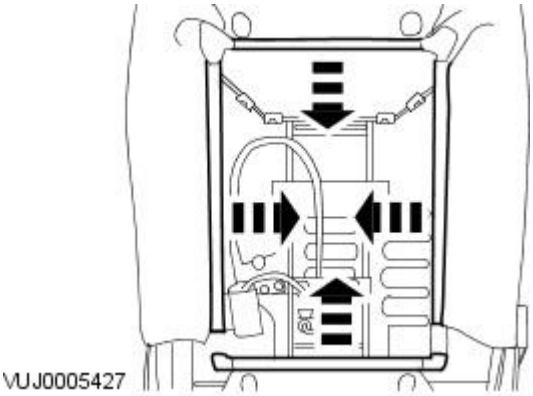


**4.** Detach the seat backrest cover.

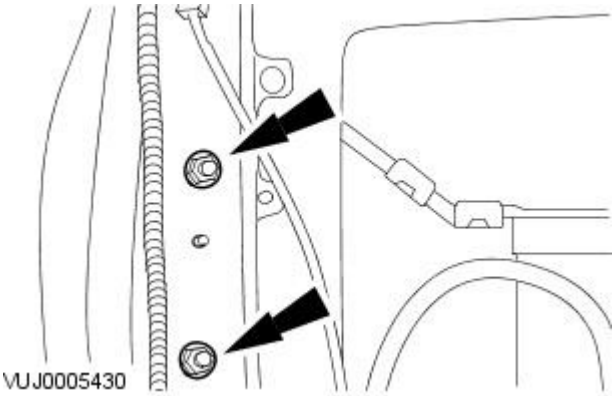


**5.** Remove the side air bag module retaining nuts.

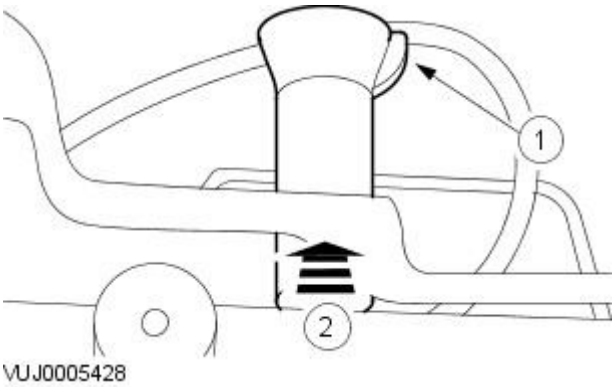


**6.** NOTE: Left-hand shown, right-hand similar.

Remove the head restraint retaining post.

1. Release the retaining tang.
2. Remove the head restraint retaining post.

**7.** Detach the seat backrest cover and cushion.

1. Reposition the seat backrest cover and cushion.
2. Detach the seat backrest cover and cushion.

GETtheMANUALS.org

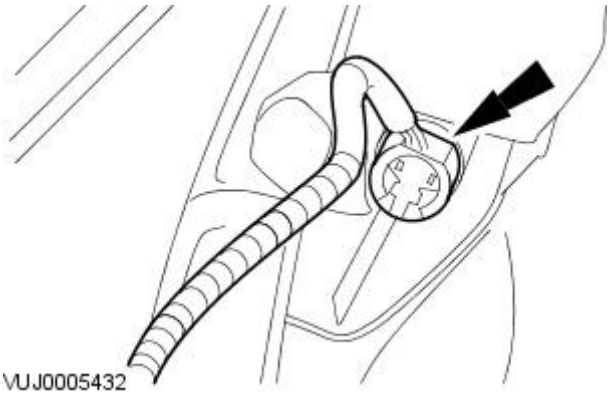


**8.** Disconnect the side air bag module electrical connector.

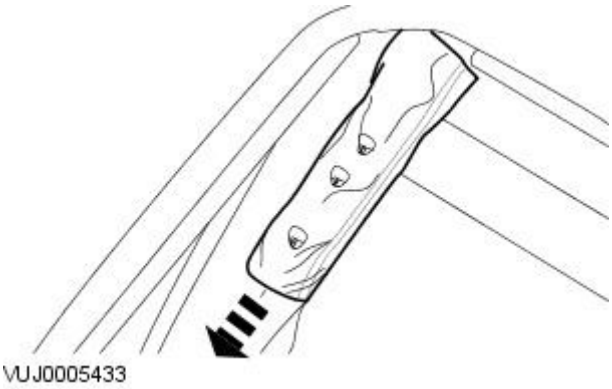


**9.** Remove the side air bag module.

## Installation

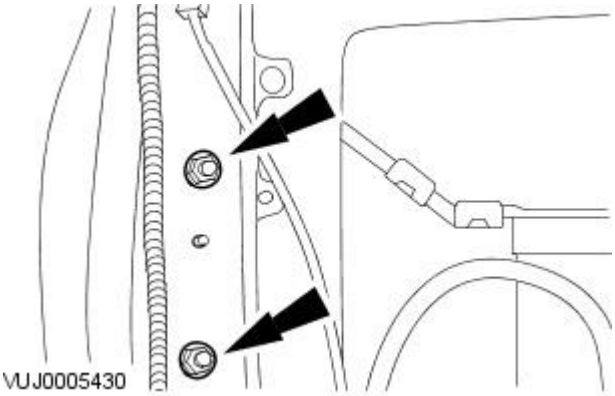


**1.** WARNINGS:

A restraints control module (RCM) only requires replacement if the system has incurred five separate deployments. At no time change the RCM for less than five separate deployments.

Always wear safety glasses when repairing an air bag supplemental restraint system (SRS) vehicle and when handling an air bag module. Failure to follow this instruction may result in personal injury.

Carry a live air bag module with the air bag and trim cover pointed away from your body. This will reduce the risk of injury in the event of an accidental deployment. Failure to follow this instruction may result in personal injury.

Do not set a live air bag module down with the trim cover face down. Failure to follow this instruction may result in personal injury.

After deployment, the air bag surface can contain deposits of sodium hydroxide, a product of the gas generant combustion that is irritating to the skin. Wash your hands with soap and water afterwards. Failure to follow this instruction may result in personal injury.

Never probe the connectors on the air bag module. Doing so may result in air bag deployment. Failure to follow this instruction may result in personal injury.

Vehicle sensor orientation is critical for correct system operation. If a vehicle equipped with an air bag SRS is involved in a collision, inspect the sensor mounting bracket and wiring pigtail for deformation. If damaged, replace the sensor whether or not the air bag is deployed.

To avoid accidental deployment and possible personal injury, the backup power supply must be depleted before repairing or replacing any air bag SRS components. To deplete the backup power supply energy, disconnect the battery ground cable and wait one minute. Failure to follow this instruction may result in personal injury.

Make sure the side air bag module is correctly aligned in the deployment chute and the chute is correctly aligned within the seat assembly. Failure to follow this instruction may result in personal injury.

GETtheMANUALS.org

• NOTE: Repair is made by replacement only. If a part is replaced and the

new part does not correct the condition, install the original part and carry out the diagnostic procedure again.

To install, reverse the removal procedure.

- Tighten to 7 Nm.

GETtheMANUALS.org

# Supplemental Restraint System - Side Air Curtain Module

Removal and Installation

## Removal

**1.** WARNINGS:

A restraints control module (RCM) only requires replacement if the system has incurred five separate deployments. At no time change the RCM for less than five separate deployments.

Always wear safety glasses when repairing an air bag supplemental restraint system (SRS) vehicle and when handling an air bag module. Failure to follow this instruction may result in personal injury.

Carry a live air bag module with the air bag and trim cover pointed away from your body. This will reduce the risk of injury in the event of an accidental deployment. Failure to follow this instruction may result in personal injury.

Do not set a live air bag module down with the trim cover face down. Failure to follow this instruction may result in personal injury.

After deployment, the air bag surface can contain deposits of sodium hydroxide, a product of the gas generant combustion that is irritating to the skin. Wash your hands with soap and water afterwards. Failure to follow this instruction may result in personal injury.

Never probe the connectors on the air bag module. Doing so may result in air bag deployment. Failure to follow this instruction may result in personal injury.

Air bags modules with discolored or damage trim covers must be replaced. Failure to follow this instruction may result in personal injury.

Vehicle sensor orientation is critical for correct system operation. If a vehicle equipped with an air bag SRS is involved in a collision, inspect the sensor mounting bracket and wiring pigtail for deformation. If damaged, replace the sensor whether or not the air bag is deployed.

To avoid accidental deployment and possible personal injury, the backup power supply must be depleted before repairing or replacing any air bag SRS components. To deplete the backup power supply energy, disconnect the battery ground cable and wait one minute. Failure to follow this instruction may result in personal injury.

Only carry out a system test with the air bag modules fully installed. Failure to follow this instruction may result in personal injury.

• NOTE: Repair is made by replacement only.

• NOTE: Once the side air curtain module retaining straps have been detached the side air curtain module must be replaced.

Reposition the front seat backs to the maximum reclined position.

**2.** Disconnect the battery ground cable.
For additional information, refer to Section 414-01 Battery, Mounting and Cables.

**3.** Remove both A-pillar trim panels.
For additional information, refer to Section 501-05 Interior Trim and Ornamentation.

**4.** Remove both B-pillar upper trim panels.
For additional information, refer to Section 501-05 Interior Trim and Ornamentation.

**5.** Remove both C-pillar trims.
For additional information, refer to Section 501-05 Interior Trim and Ornamentation.

**6.** Remove both sun visors.
For additional information, refer to Section 501-05 Interior Trim and Ornamentation.

GETtheMANUALS.org

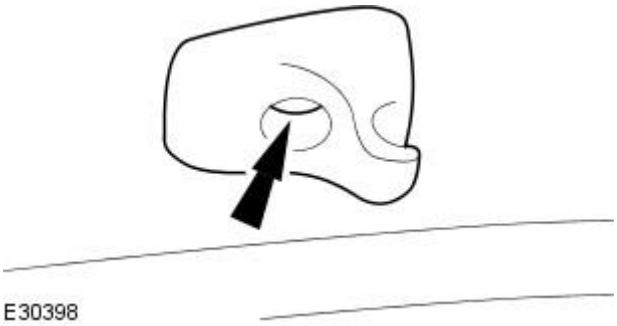

E30398

**7.** NOTE: Left-hand shown, right-hand similar.

Remove the sun visor retaining clip.

**8.** Remove the overhead console.
For additional information, refer to Section 501-12 Instrument Panel and Console.

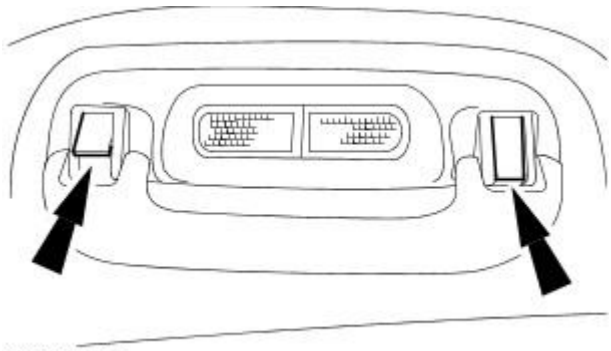

VUJ0005703

**9.** NOTE: Left-hand shown, right-hand similar.

Detach the rear passenger assist handle retaining screw covers.

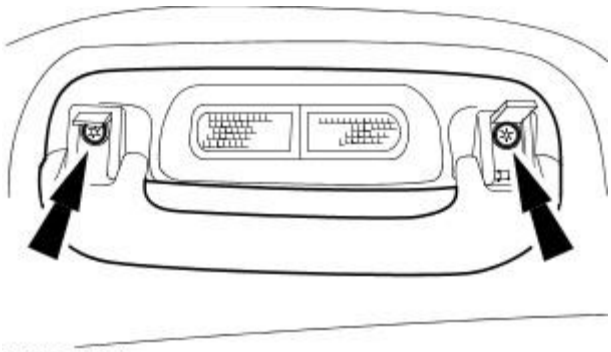

VUJ0005704

**10.** NOTE: Left-hand shown, right-hand similar.

Detach the rear passenger assist handle.

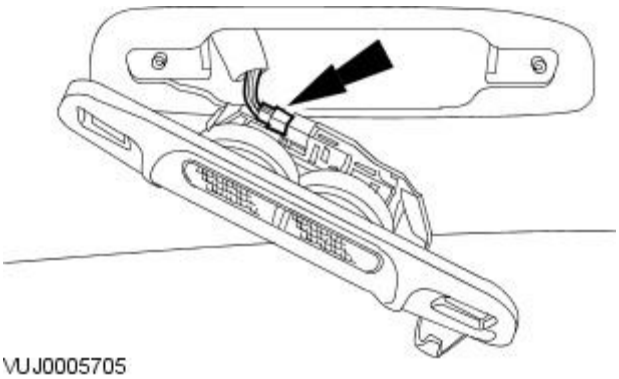

VUJ0005705

**11.** NOTE: Left-hand shown, right-hand similar.

Remove the rear passenger assist handle.

- Disconnect the electrical connector.

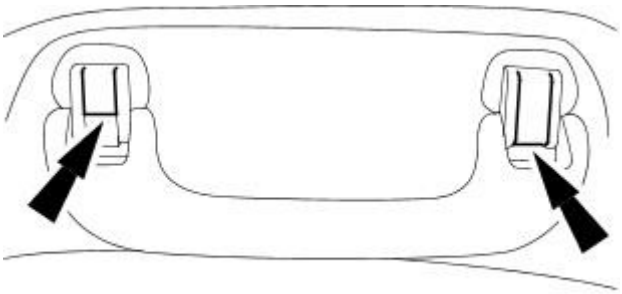

VUJ0005706

**12.** NOTE: Left-hand shown, right-hand similar.

Detach the front passenger assist handle retaining screw covers.

GETtheMANUALS.org

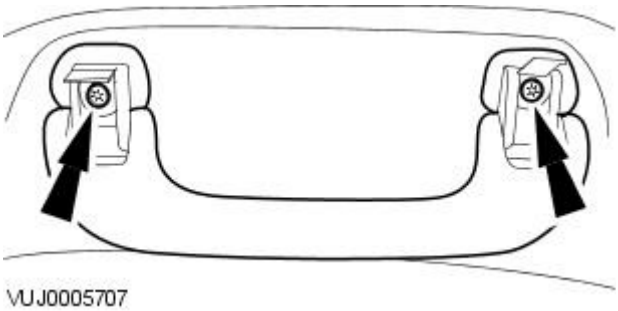


**13.** NOTE: Left-hand shown, right-hand similar.

Remove the front passenger assist handle.

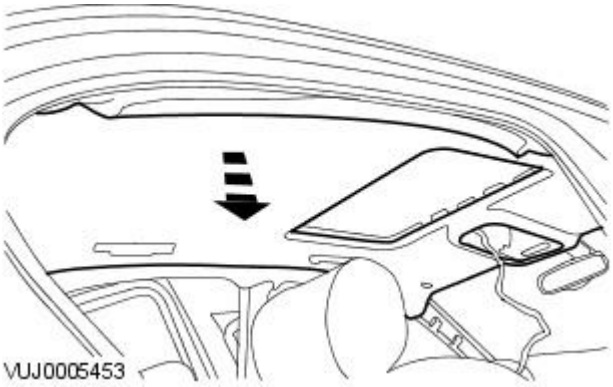


**14.** Detach the head liner.

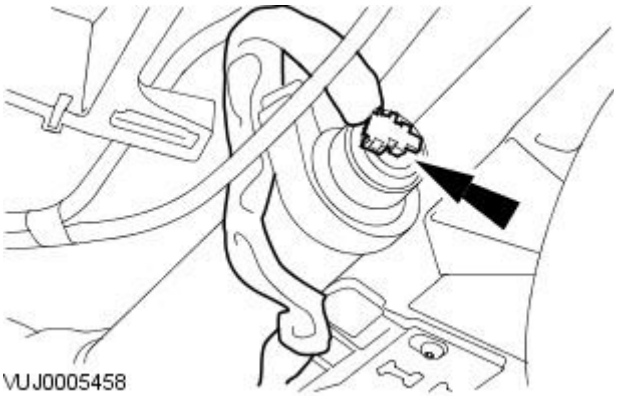


**15.** Disconnect the side air curtain module electrical connector.

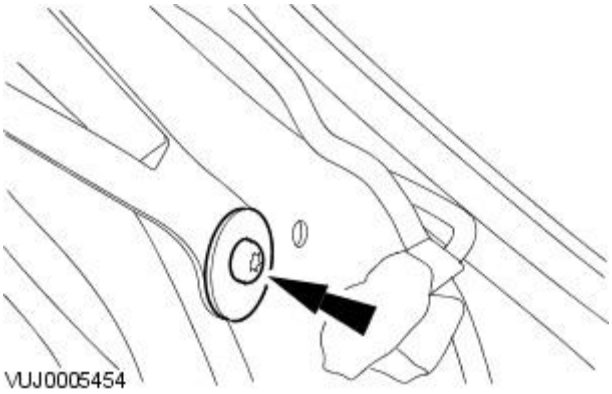


**16.** NOTE: Make sure the retaining strap routing is noted before removal.

Remove the front retaining strap retaining bolt.

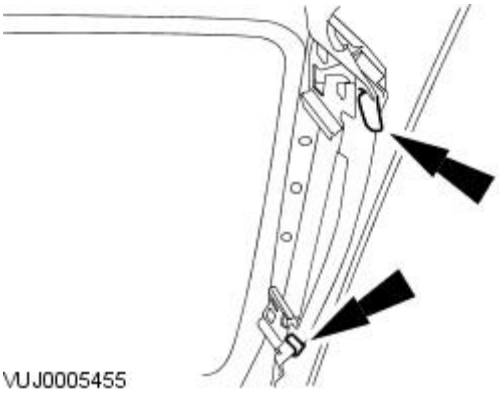


**17.** NOTE: Make sure the retaining strap routing is noted before removal.

Detach the front retaining strap.

GETtheMANUALS.org

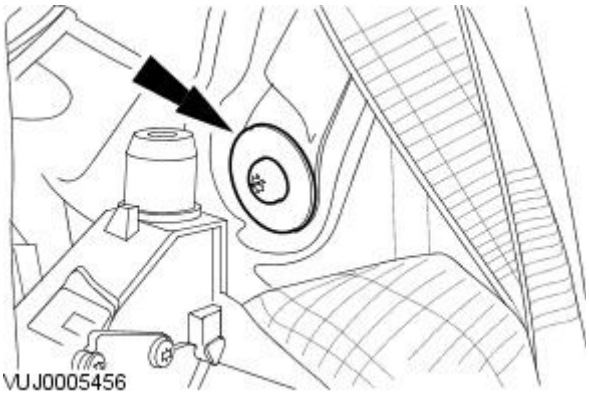


**18.** NOTE: Make sure the retaining strap routing is noted before removal.

Remove the rear retaining strap retaining bolt.

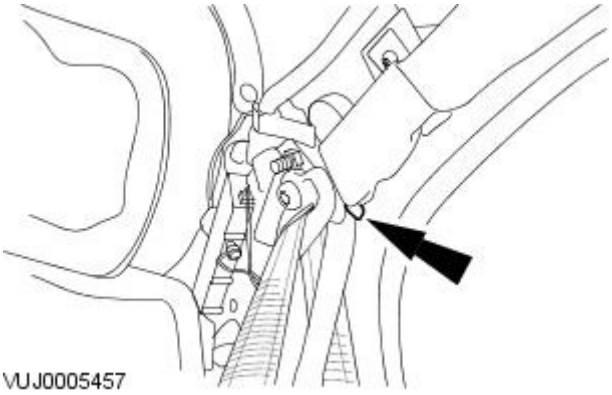


**19.** NOTE: Make sure the retaining strap routing is noted before removal.

Detach the rear retaining strap.

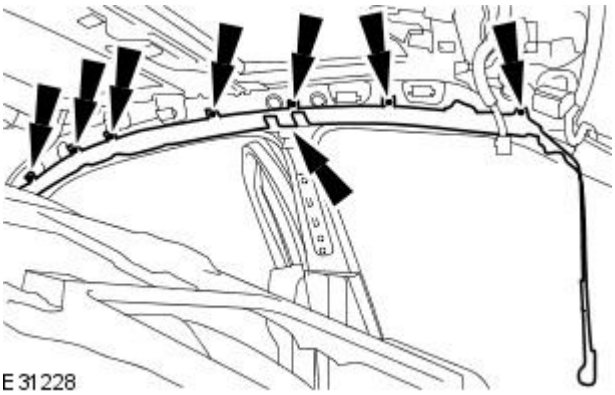


**20.** Remove the side air curtain module retaining bolts.

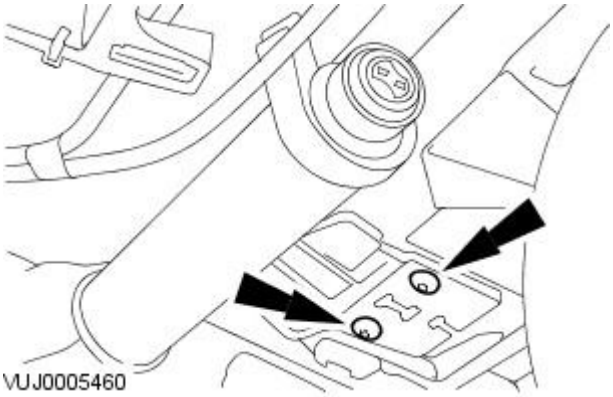


**21.** Remove the side air curtain module.

- Remove the side air curtain canister retaining bolts.

## Installation

GETtheMANUALS.org

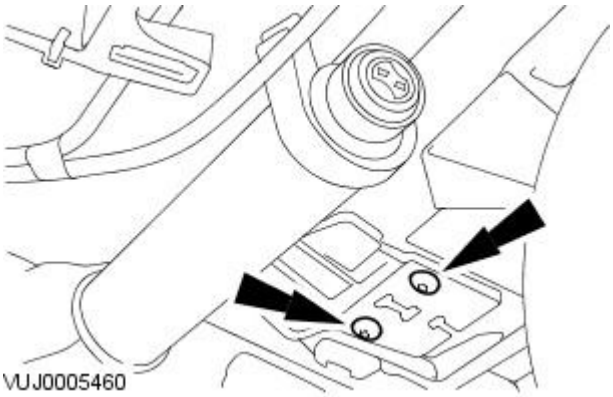


**1.** WARNINGS:

A restraints control module (RCM) only requires replacement if the system has incurred five separate deployments. At no time change the RCM for less than five separate deployments.

Always wear safety glasses when repairing an air bag supplemental restraint system (SRS) vehicle and when handling an air bag module. Failure to follow this instruction may result in personal injury.

To avoid accidental deployment and possible personal injury, the backup power supply must be depleted before repairing or replacing any air bag SRS components. To deplete the backup power supply energy, disconnect the battery ground cable and wait one minute. Failure to follow this instruction may result in personal injury.

Carry a live air bag module with the air bag and trim cover pointed away from your body. This will reduce the risk of injury in the event of an accidental deployment. Failure to follow this instruction may result in personal injury.

Never probe the connectors on the air bag module. Doing so may result in air bag deployment. Failure to follow this instruction may result in personal injury.

New nylon thread forming inserts must be used ever time the screws are removed from the side air curtain. Failure to follow this instruction may result in personal injury.

Only carry out a system test with the air bag modules fully installed. Failure to follow this instruction may result in personal injury.

• NOTE: Repair is made by replacement only.

• NOTE: When installing a new air bag module, a prepaid return postcard is provided with the replacement air bag module. The serial number for the new part and the vehicle identification number (VIN) must be recorded and sent to Jaguar Cars Limited.

• NOTE: Once the side air curtain module retaining straps have been detached the side air curtain module must be replaced.

• NOTE: Make sure the side air curtain module is correctly located.

• NOTE: Ensure the fill tube between the canister and the side air curtain is not twisted.

• NOTE: Make sure the tethers are correctly routed.

To install, reverse the removal procedure.

- Tighten to 9 Nm.

**2.** Tighten to 1 Nm.

GETtheMANUALS.org

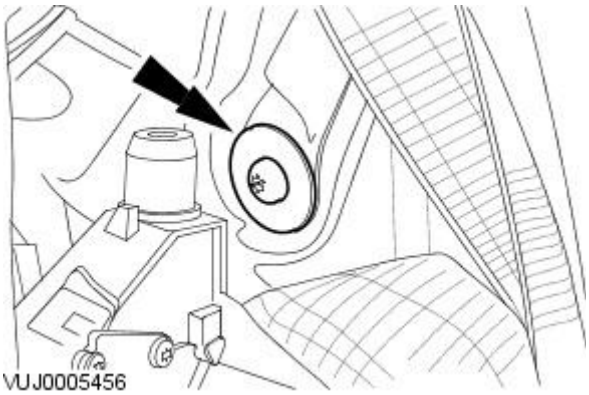


**3.** Tighten to 9 Nm.

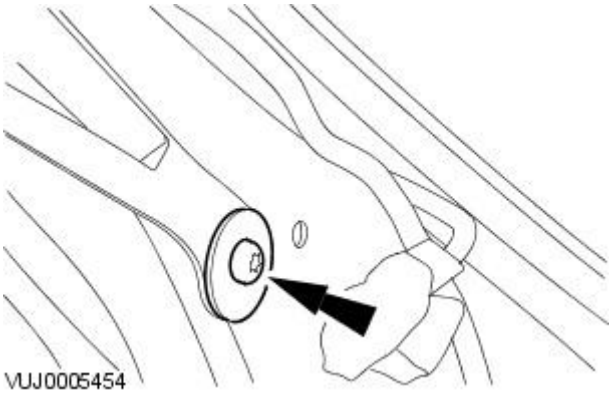


**4.** Tighten to 9 Nm.

GETtheMANUALS.org

# Uni-Body, Subframe and Mounting System -

**Torque Specifications**

| Description | Nm | lb-ft | lb-in |
|---|---|---|---|
| Front lower arm to front subframe retaining nut and bolt | 175 | 129 | — |
| Rear lower arm to front subframe retaining nut and bolt | 175 | 129 | — |
| Engine mount lower retaining nut | 63 | 46 | — |
| Steering gear retaining bolts | 100 | 74 | — |
| Front Shock absorber and spring assembly retaining bolt | 175 | 129 | — |
| Front subframe to body front retaining bolt | A | — | — |
| Front subframe to body rear retaining bolt | A | — | — |
| Stabilizer bar link retaining nut | A | — | — |
| Stabilizer bar link retaining nut and bolt | 70 | 52 | |
| Rear Shock absorber and spring assembly retaining bolt | 133 | 98 | — |
| Rear subframe reinforcement plate retaining bolts | 47 | 35 | — |
| Rear subframe to body retaining bolts | 125 | 92 | — |
| A = refer to the procedure for correct torque sequence | — | — | — |

GETtheMANUALS.org

# Uni-Body, Subframe and Mounting System - Frame Assembly

Description and Operation

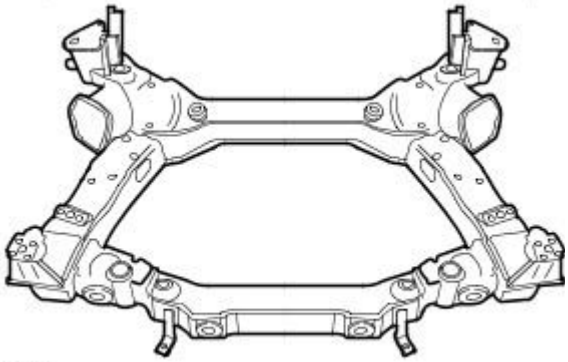

E31114

The front subframe is bolted to the body and aids in structural support. The subframe provides the mounting surface for the steering gear, the front suspension lower arms, the stabilizer bar and the engine mounts.

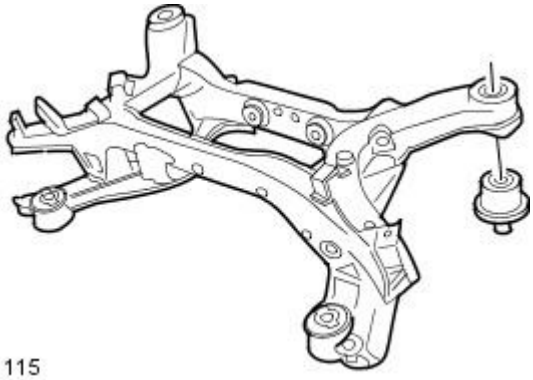

E31115

The rear subframe is bolted to the body and aids in structural support. The subframe provides the mounting surface for the rear suspension components, the exhaust hanger insulators and the rear drive differential.

GETtheMANUALS.org

# Uni-Body, Subframe and Mounting System - Front Subframe2.5L NA V6 - AJV6 / 3.0L NA V6 - AJ27

Removal and Installation

| Special Tool(s) | |
|---|---|
| HTJ12002 | Powertrain Assembly Jack<br><br>HTJ1200-02 |
| 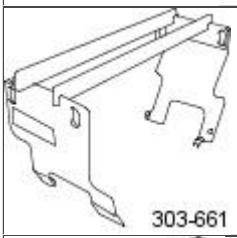 303-661 | Engine lifting Bracket<br><br>303-661 |
| 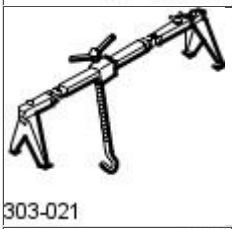 303-021 | Engine Support Bracket<br><br>303-021 |
| 502-005 | Subframe Alignment Bolt<br><br>502-005 |

## Removal

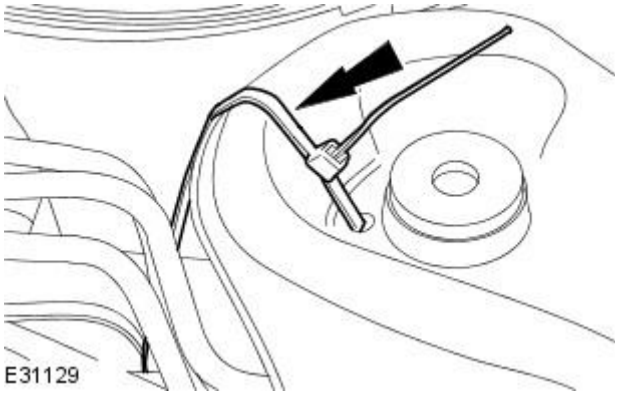


**1.** NOTE: Right-hand shown left-hand similar.

Support the radiator.

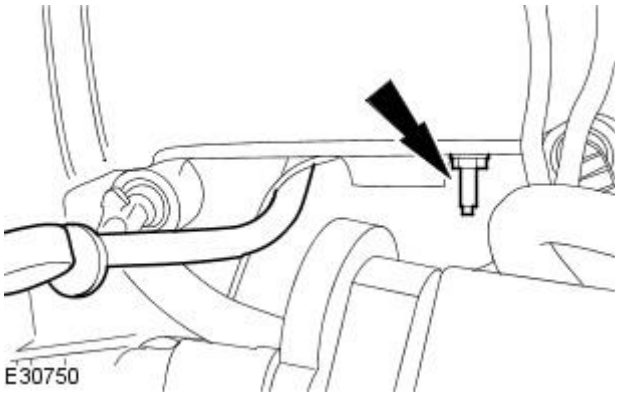


**2.** Reposition the dipstick tube.

- Remove the dipstick tube retaining bolt.

GETtheMANUALS.org

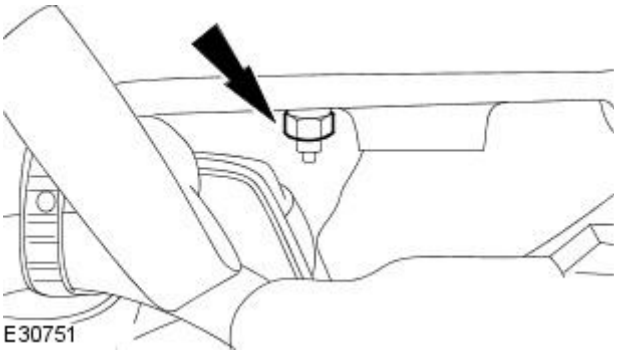


**3.** NOTE: Left-hand shown, right-hand similar.

Loosen the exhaust manifold retaining nut.

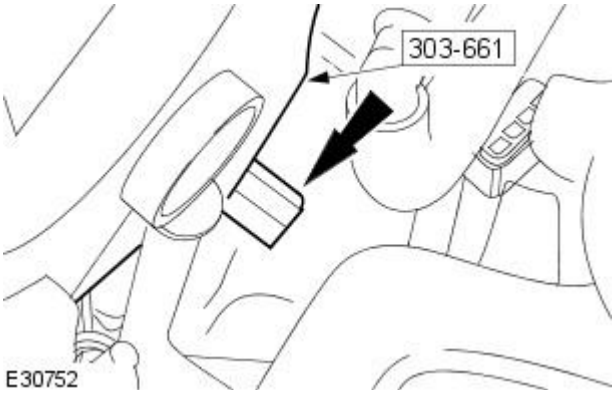


**4.** NOTE: Left-hand shown, right-hand similar.

Install the special tool to the exhaust manifold.

- Install the retaining bolt.

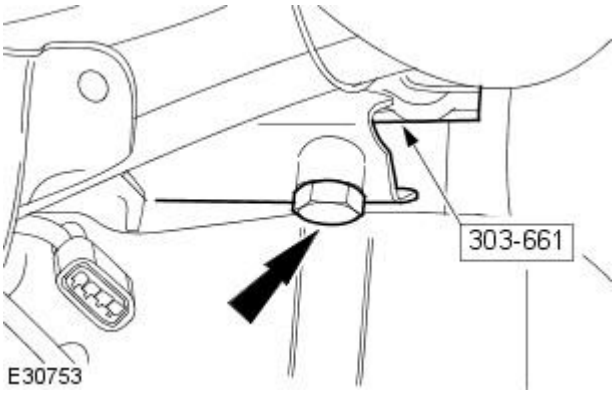


**5.** NOTE: Left-hand shown, right-hand similar.

Install the retaining bolt.

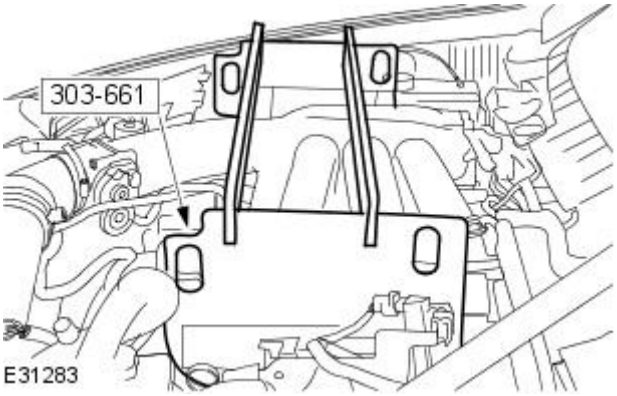


**6.** Install the special tool support bars to the special tool.

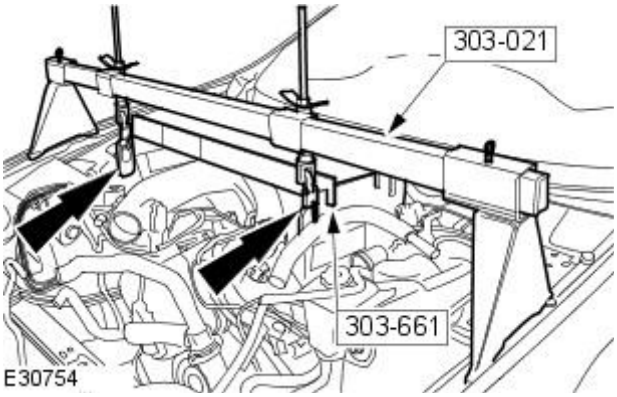


**7.** Install the special tool.

GETtheMANUALS.org

**8.** Remove the radiator splash shield.

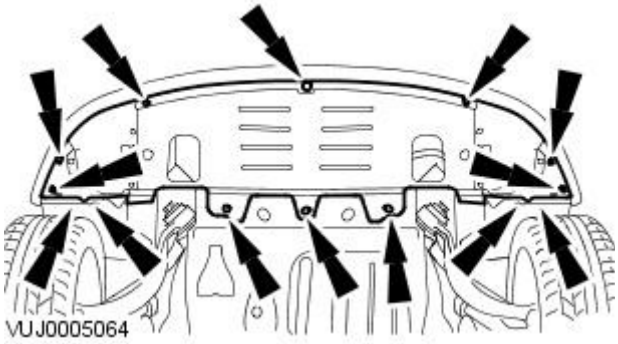


**9.** Remove both the front wheel and tires.
For additional information, refer to: Wheel and Tire (204-04 Wheels and Tires, Removal and Installation).

**10.** Remove the air deflector.

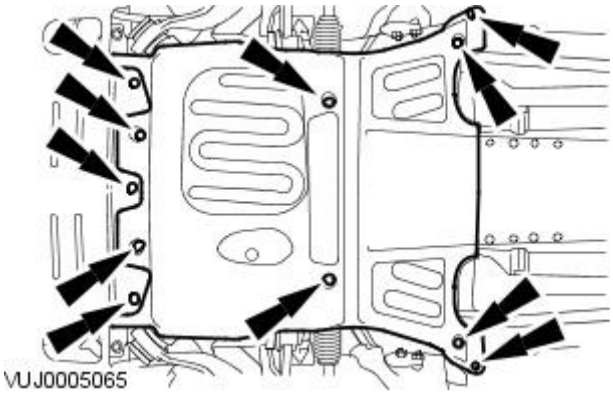


**11.** NOTE: Left-hand shown, right-hand similar.

Remove the stabilizer bar link retaining nut.

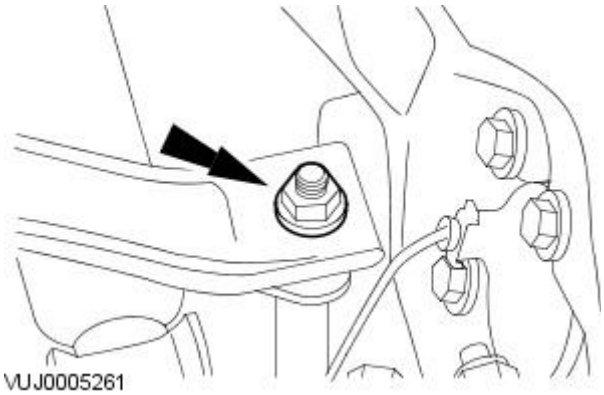


**12.** NOTE: Left-hand shown, right-hand similar.

Remove the stabilizer bar link.

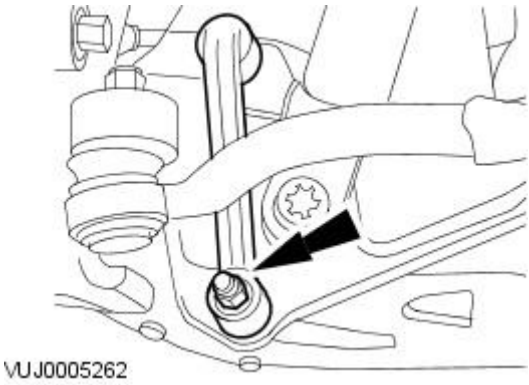


**13.** Detach the steering gear.

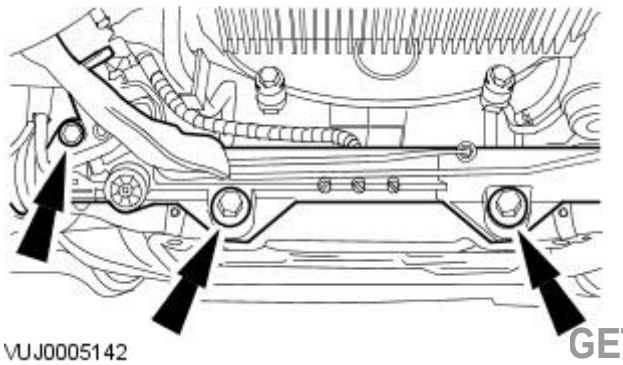


GETtheMANUALS.org

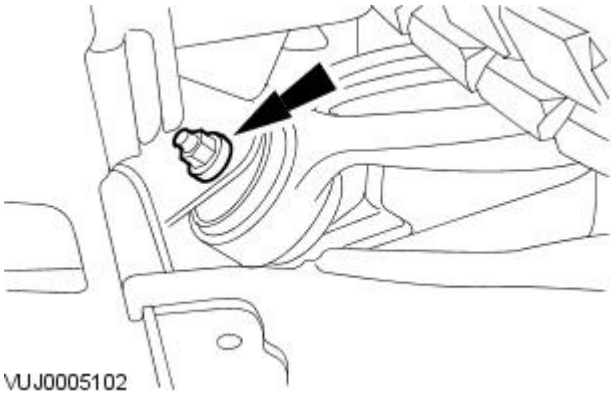


**14.** NOTE: Left-hand shown, right-hand similar.

Detach the front lower arm.

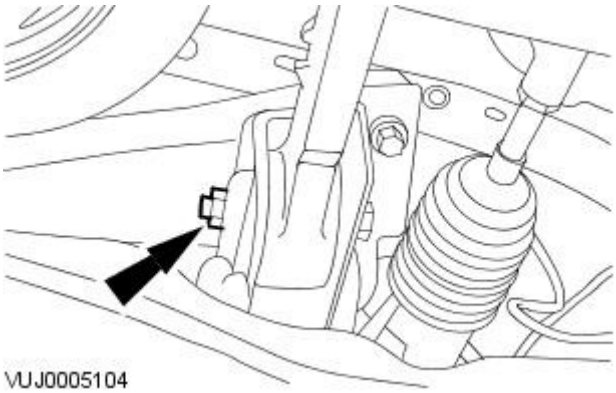


**15.** NOTE: Left-hand shown, right-hand similar.

Detach the rear lower arm.

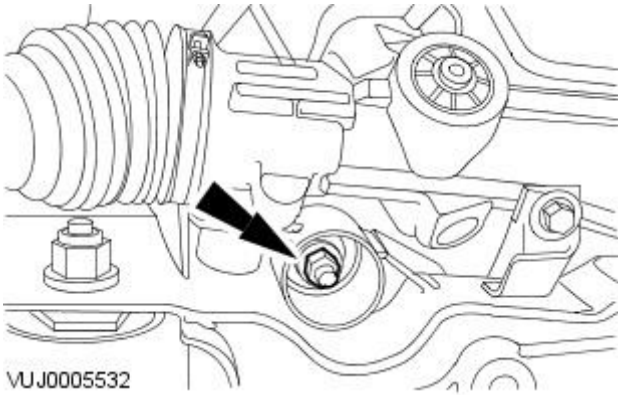


**16.** NOTE: Left-hand shown, right-hand similar.

Detach the engine mount.

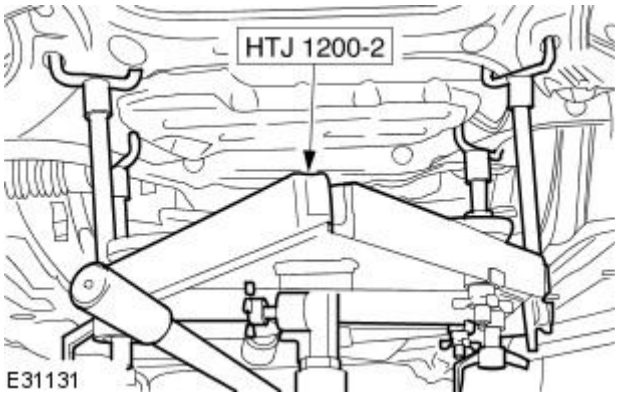


**17.** Install the special tool.

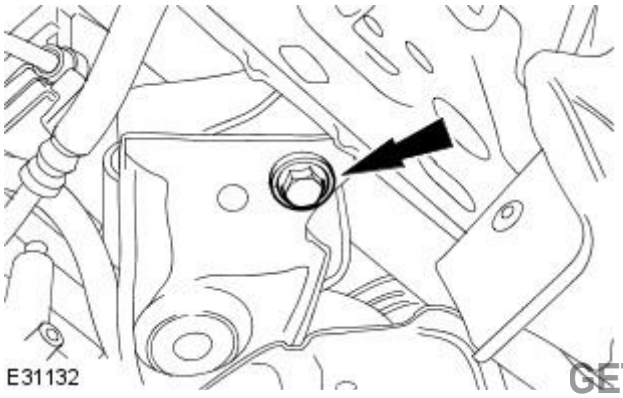


**18.** NOTE: Left-hand shown, right-hand similar.

Remove the front subframe front retaining bolt.

GETtheMANUALS.org

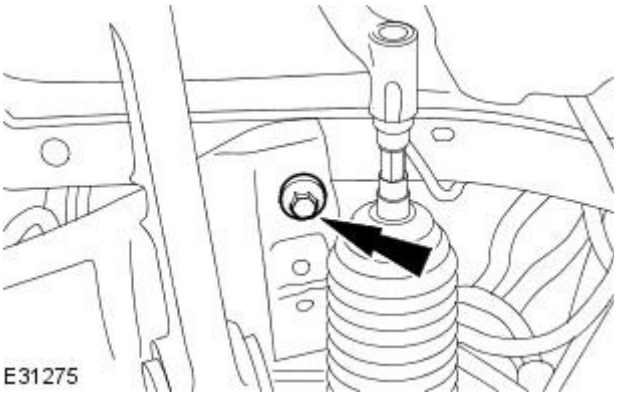


**19.** NOTE: Left-hand shown, right-hand similar.

Remove the front subframe rear retaining bolts.

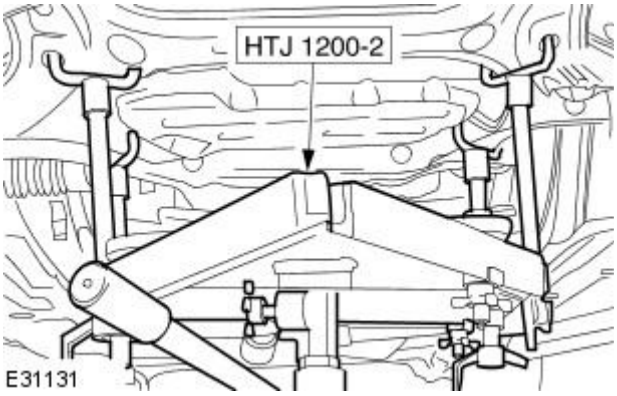


**20.** Remove the front subframe.

## Installation

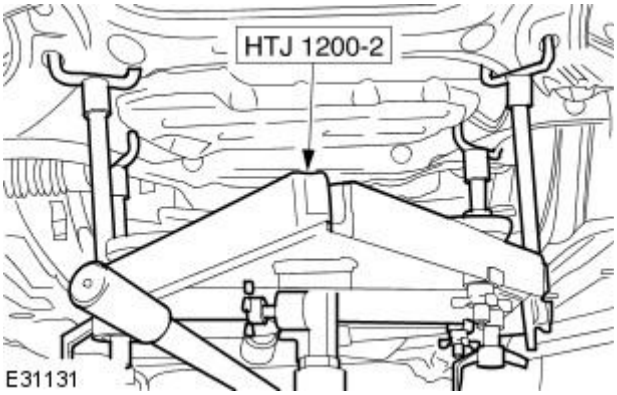


**1.** Install the front subframe.

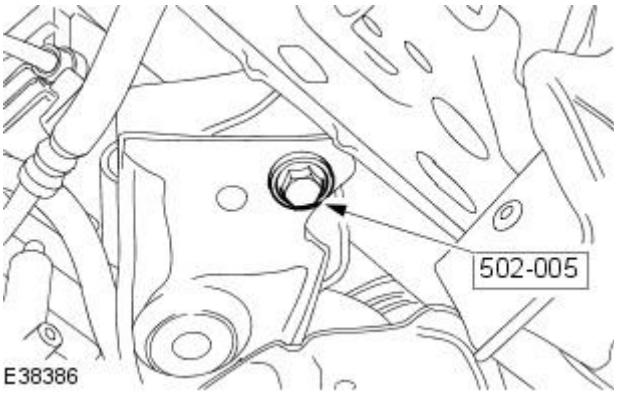


**2.** NOTE: Left-hand shown, right-hand similar.

Install the special tool.

GETtheMANUALS.org

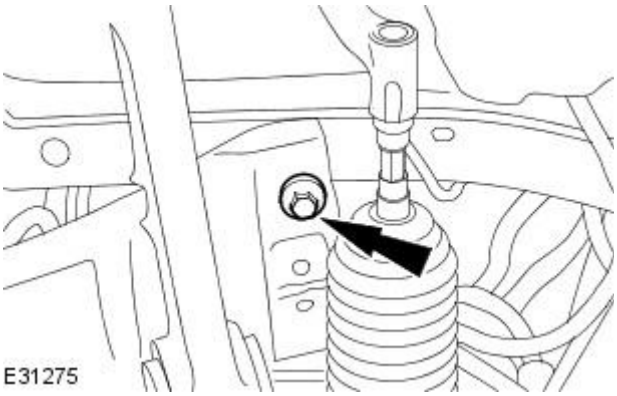


**3.** NOTE: Left-hand shown, right-hand similar.

Install the front subframe rear retaining bolts.

- Tighten to 80 Nm + 240°.

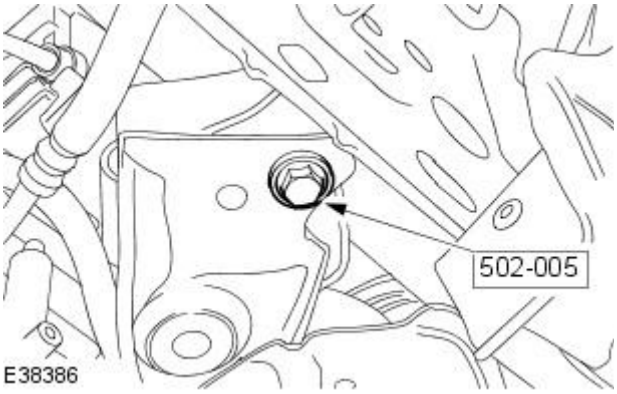


**4.** Remove the special tool.

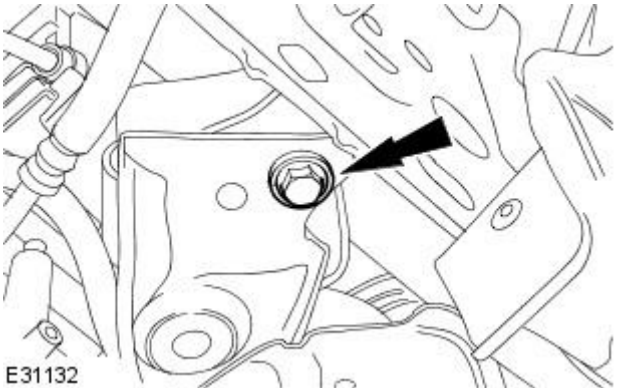


**5.** Install the front subframe front retaining bolt.

- Tighten to 150 Nm + 240°.

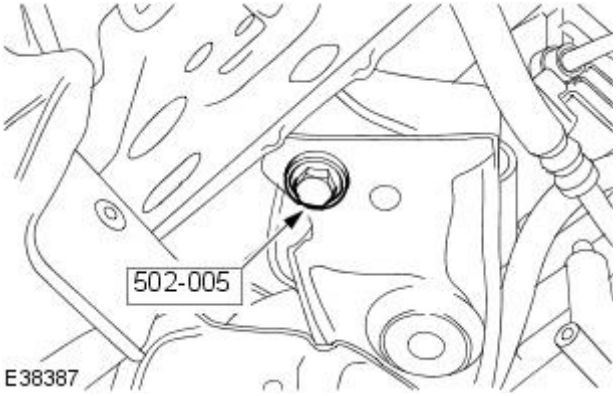


**6.** Remove the special tool.

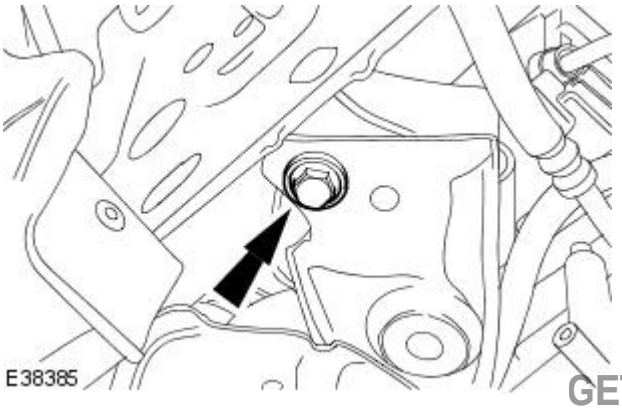


**7.** Install the front subframe front retaining bolt.

- Tighten to 150 Nm + 240°.

GETtheMANUALS.org

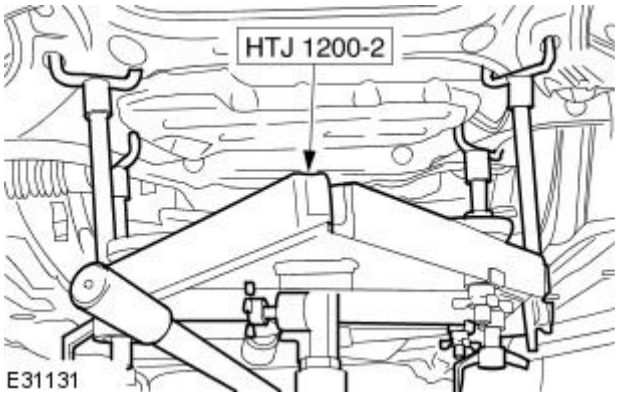


**8.** Remove the special tool.

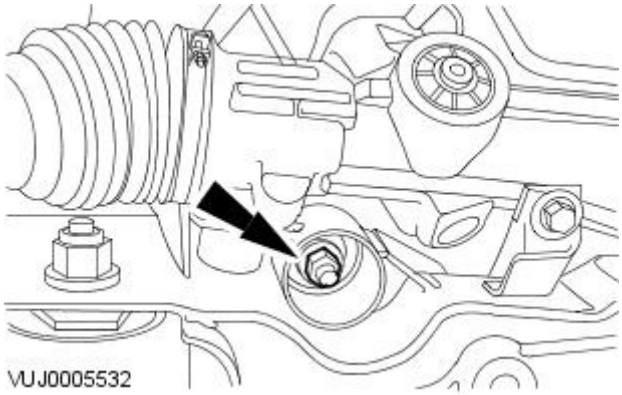


**9.** NOTE: Left-hand shown, right-hand similar.

Install the engine mount.

- Tighten to 63 Nm.

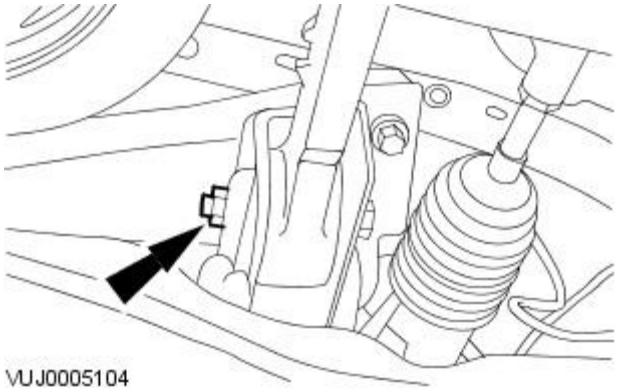


**10.** CAUTION: The final tightening of the rear lower arm inner retaining nut and bolt must be carried out with the vehicle on its wheels.

• NOTE: Left-hand shown, right-hand similar.

Install the rear lower arm.

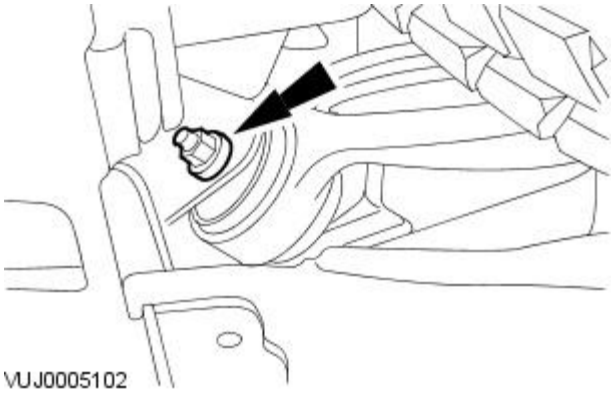


**11.** CAUTION: The final tightening of the front lower arm inner retaining nut and bolt must be carried out with the vehicle on its wheels.

• NOTE: Left-hand shown, right-hand similar.

Install the front lower arm.

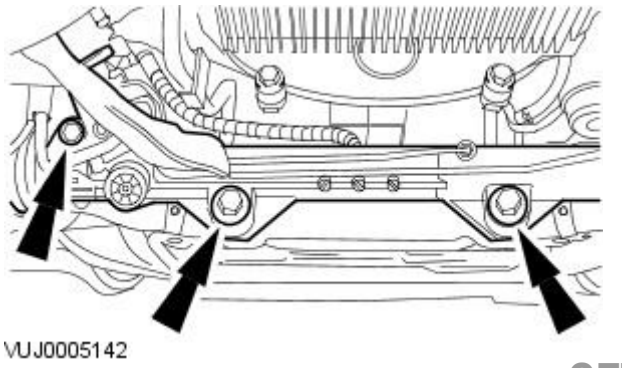


**12.** Install the steering gear.

- Tighten to 100 Nm.

GETtheMANUALS.org

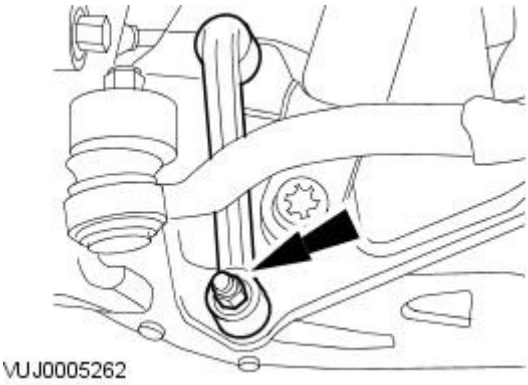


**13.** NOTE: Left-hand shown, right-hand similar.

Install the stabilizer bar link.

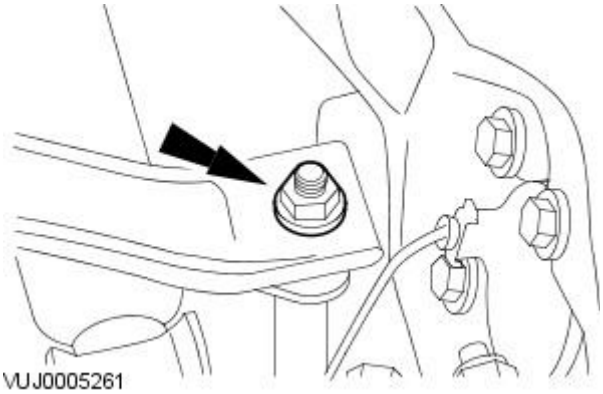


**14.** NOTE: Left-hand shown, right-hand similar.

Attach the stabilizer bar link.

- Tighten to 43 Nm.

**15.** Check the front subframe alignment.

**16.** Install both the front wheel and tires.
For additional information, refer to: Wheel and Tire (204-04 Wheels and Tires, Removal and Installation).

**17.** Install the radiator splash shield.

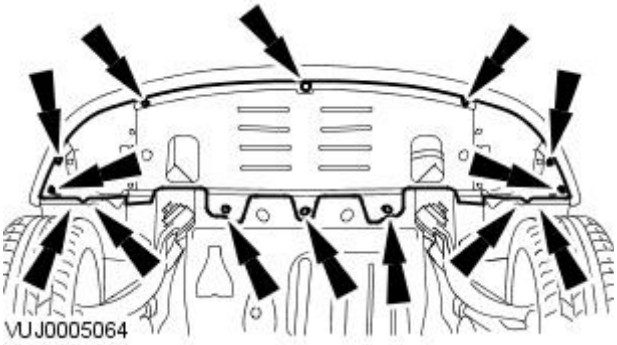


**18.** Install the air deflector.

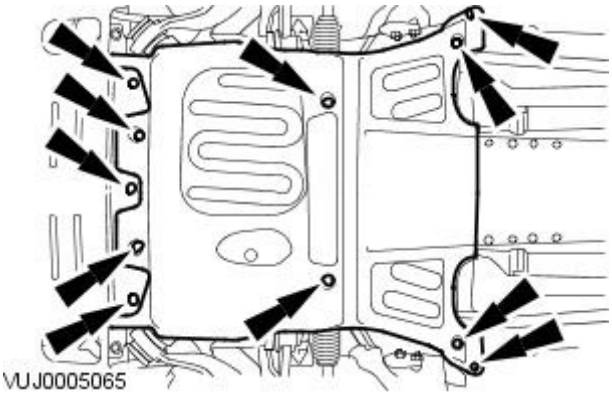


GETtheMANUALS.org

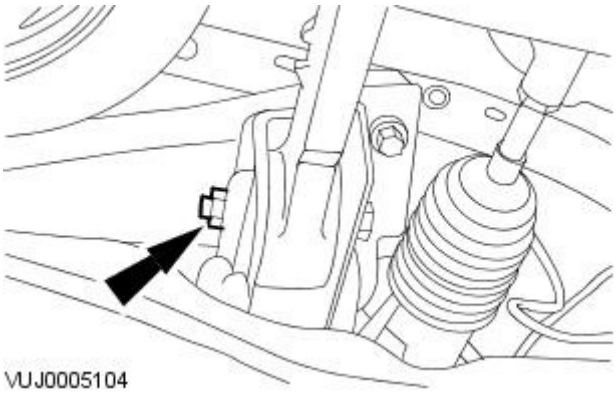


**19.** CAUTION: The final tightening of the rear lower arm inner retaining nut and bolt must be carried out with the vehicle on its wheels.

• NOTE: Left-hand shown, right-hand similar.

Tighten to 175 Nm.

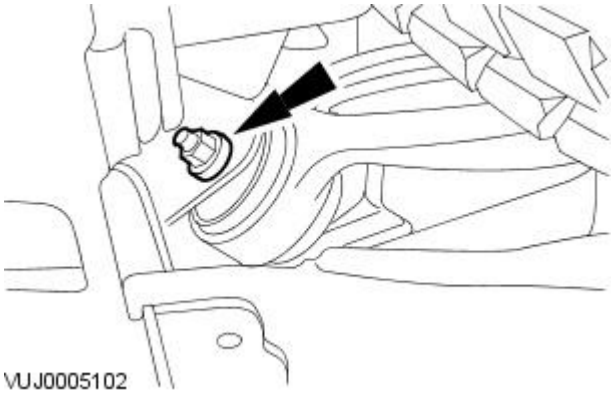


**20.** CAUTION: The final tightening of the front lower arm inner retaining nut and bolt must be carried out with the vehicle on its wheels.

• NOTE: Left-hand shown, right-hand similar.

Tighten to 175 Nm.

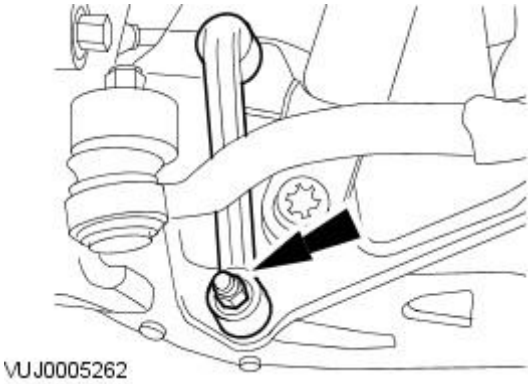


**21.** NOTE: Left-hand shown, right-hand similar.

Tighten to 70 Nm.

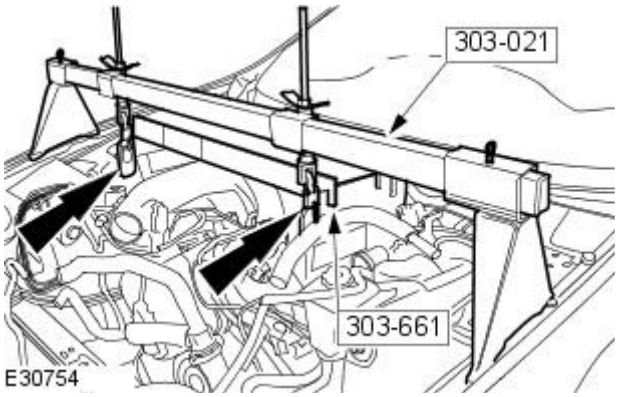


**22.** Remove the special tool.

- Loosen the special tool adjustment bolts.

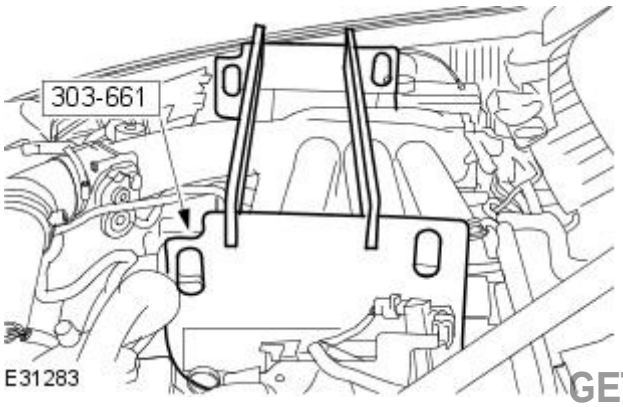


**23.** Remove the special tool support bars from the special tool.

GETtheMANUALS.org

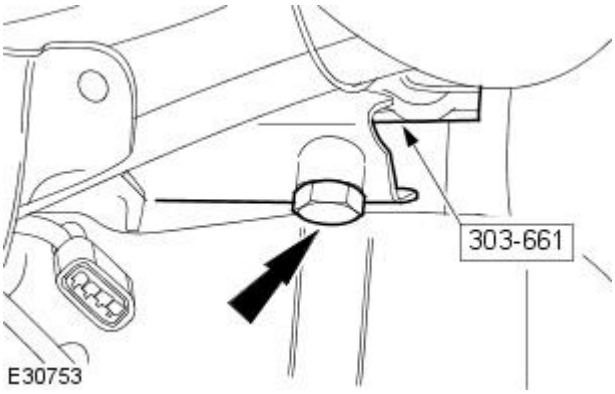


**24.** NOTE: Left-hand shown, Right-hand similar.

Remove the retaining bolt.

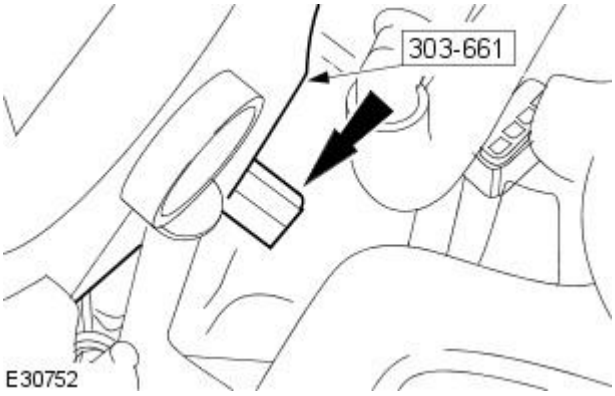


**25.** NOTE: Left-hand shown, Right-hand similar.

Remove the special tool from the exhaust manifold.

- Remove the retaining bolt.

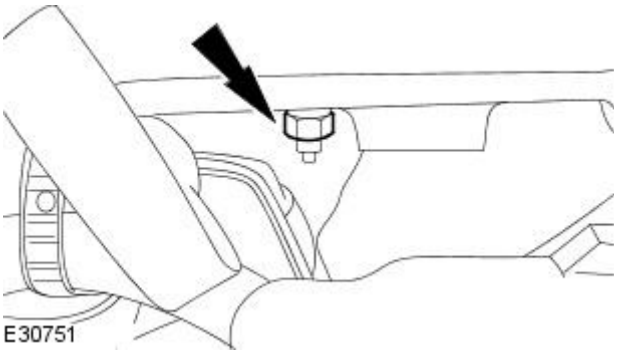


**26.** NOTE: Left-hand shown, Right-hand similar.

Tighten the exhaust manifold retaining nut.

- Tighten to 20 Nm.

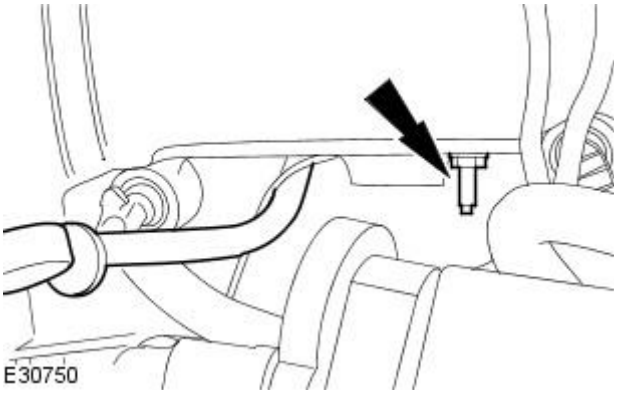


**27.** Reposition the dipstick tube.

- Tighten to 10 Nm.

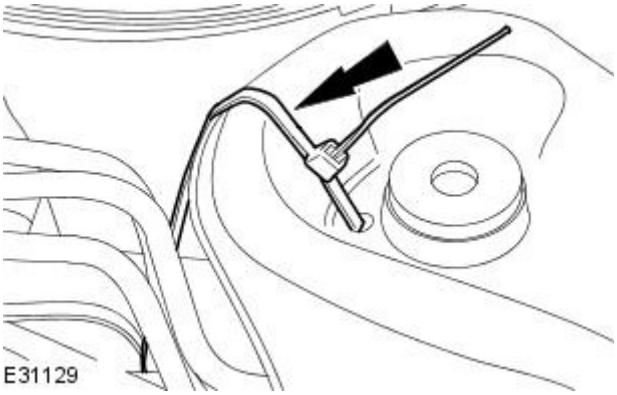


**28.** NOTE: Right-hand shown left-hand similar.

Remove the radiator support.

GETtheMANUALS.org

# Uni-Body, Subframe and Mounting System - Front Subframe2.7L V6 - TdV6

Removal and Installation

| Special Tool(s) | |
|---|---|
| 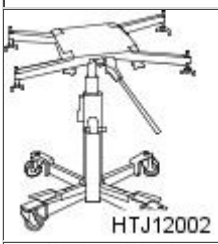  | Powertrain Assembly Jack<br><br>HTJ1200-2 |
| | Engine Lifting Brackets<br><br>303-1129 |
| 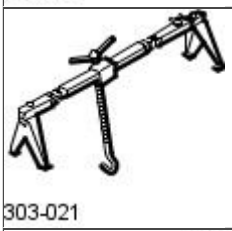  | Engine Support Bracket<br><br>303-021 |
| 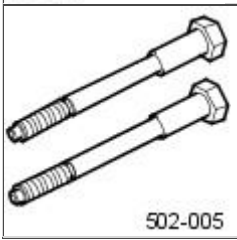  | Subframe Alignment Bolt<br><br>502-005 |

**General Equipment**

| |
|---|
| Tie Strap(s) |

## Removal

All vehicles

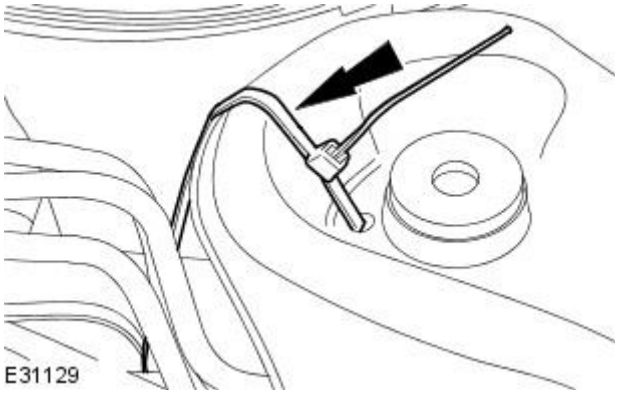


**1.** NOTE: Right-hand shown, left-hand similar.

Using suitable tie strap(s), support the radiator.

**2.** Remove the intake air shutoff throttle.
For additional information, refer to: Intake Air Shutoff Throttle (303-04C Fuel Charging and Controls - 2.7L V6 - TdV6, Removal and Installation).

**3.** Install the special tool.

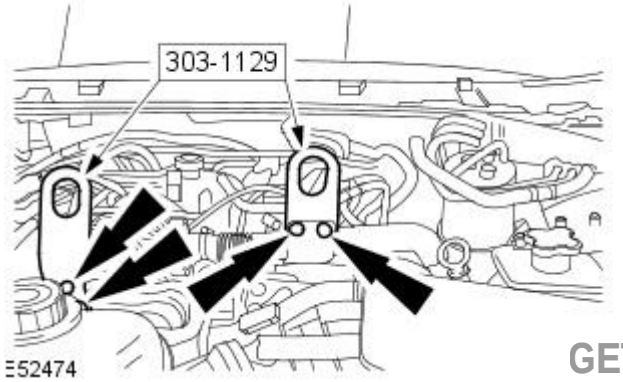


GETtheMANUALS.org

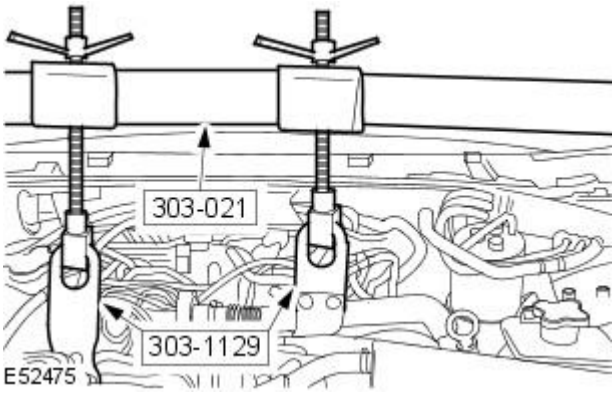


**4.** Install the special tool.

**5.** Remove the air deflector.
For additional information, refer to: Air Deflector (501-02 Front End Body Panels, Removal and Installation).

**6.** Remove the radiator splash shield.
For additional information, refer to: Radiator Splash Shield (501-02 Front End Body Panels, Removal and Installation).

**7.** Remove both the front wheel and tires.
For additional information, refer to: Wheel and Tire (204-04 Wheels and Tires, Removal and Installation).

Vehicles with automatic transmission

**8.** Remove the transmission fluid cooler.
For additional information, refer to: Transmission Fluid Cooler (307-02 Transmission/Transaxle Cooling, Removal and Installation).

All vehicles

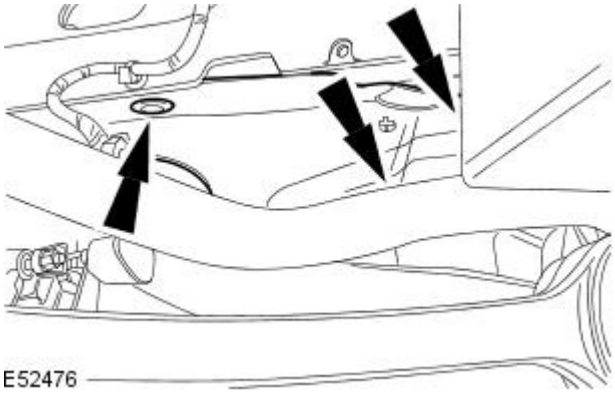


**9.** Remove the right-hand splash shield.

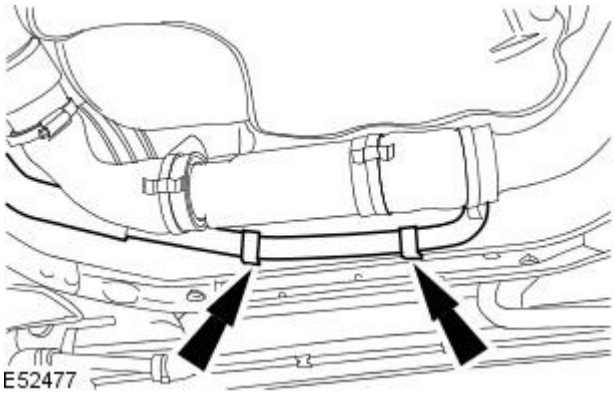


**10.** Detach the engine coolant inlet pipe from the front subframe.

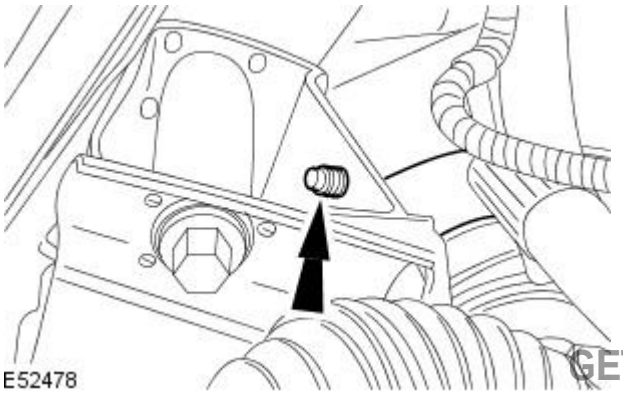


**11.** Detach the power steering hose retaining clip from the front subframe.

GETtheMANUALS.org

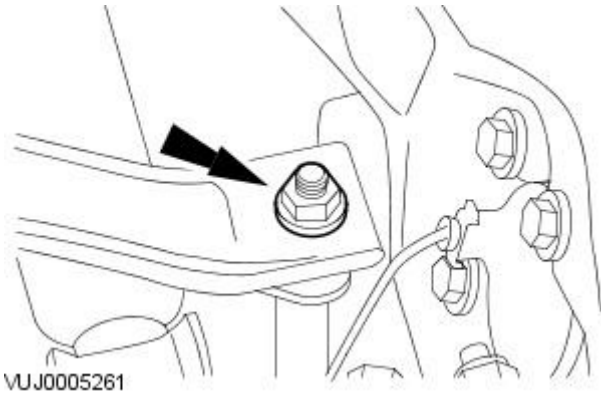


**12.** NOTE: Left-hand shown, right-hand similar.

Remove the stabilizer bar link upper retaining nut.

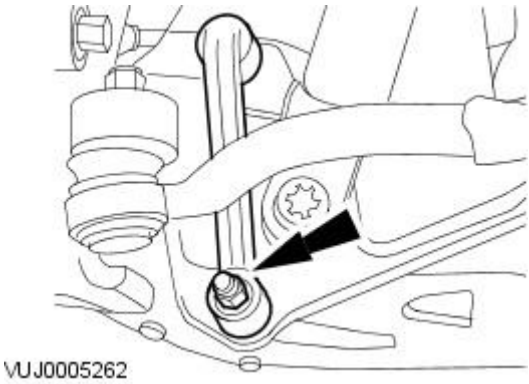


**13.** NOTE: Left-hand shown, right-hand similar.

Remove the stabilizer bar link lower retaining bolt and nut and remove the stabilizer bar link.

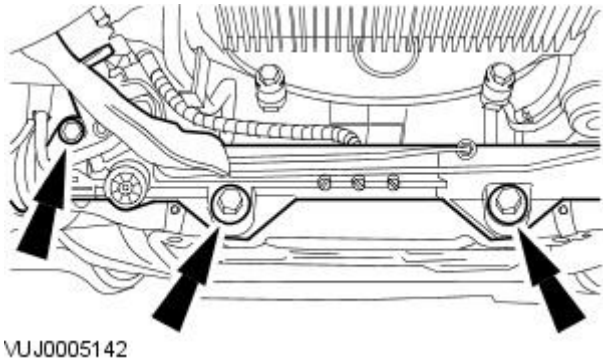


**14.** CAUTION: The steering gear must be supported. Failure to follow this instruction may result in damage to the steering gear.

Detach the steering gear.

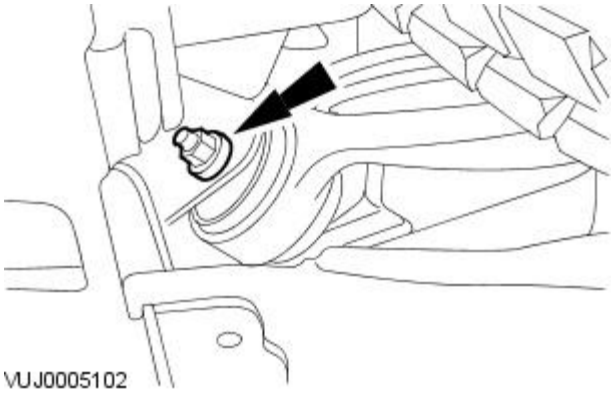


**15.** NOTE: Left-hand shown, right-hand similar.

Remove the front lower arm and position it to one side.

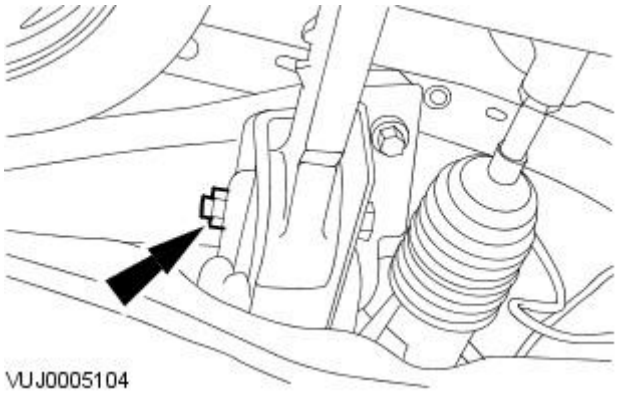


**16.** NOTE: Left-hand shown, right-hand similar.

Remove the rear lower arm and position it to one side.

GETtheMANUALS.org

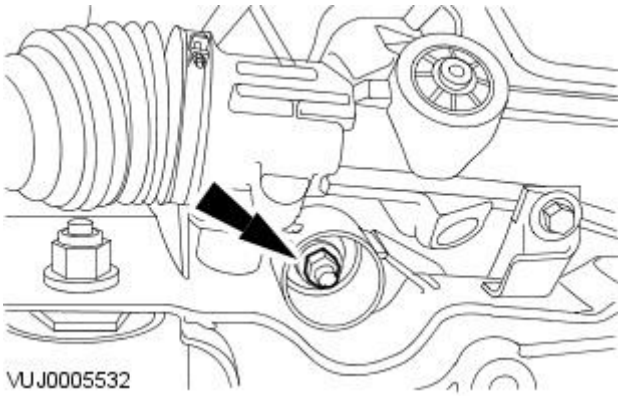


**17.** NOTE: Left-hand shown, right-hand similar.

Remove the engine mount retaining nut.

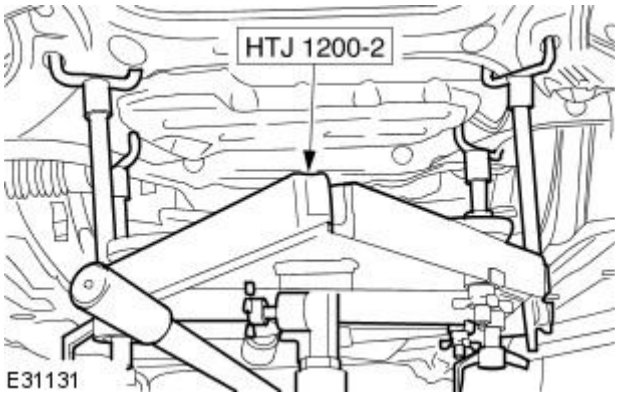


**18.** Install the special tool to the front subframe.

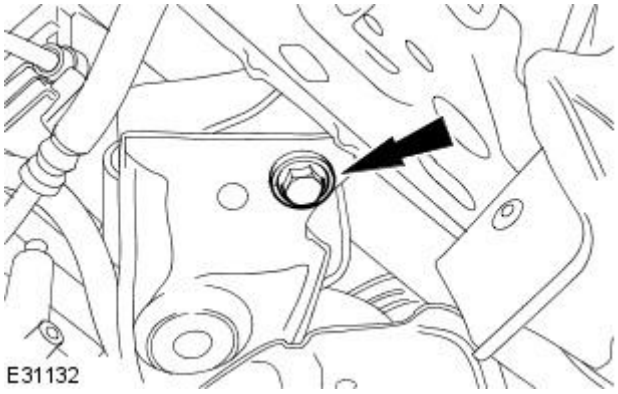


**19.** NOTE: Left-hand shown, right-hand similar.

Remove the front subframe front retaining bolt.

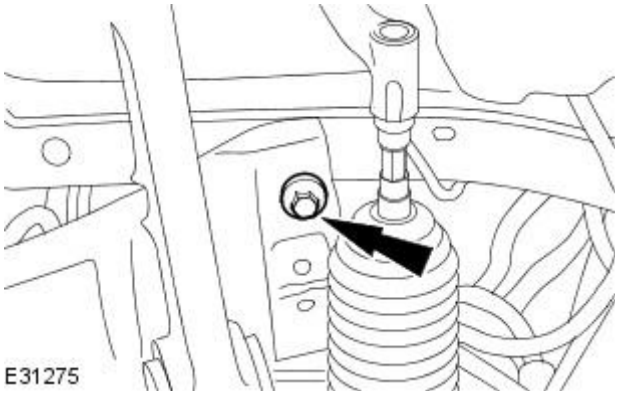


**20.** NOTE: Left-hand shown, right-hand similar.

Remove the front subframe rear retaining bolt.

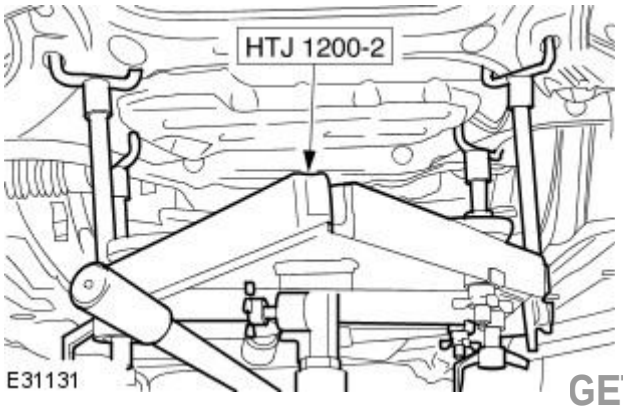


**21.** CAUTION: When lowering the special tool care must be taken to manoeuvre the special tool so that the front subframe does not touch the air conditioning (A/C) pipes. Failure to follow this instruction may result in damage to the A/C pipes.

Remove the front subframe.

GETtheMANUALS.org

## Installation

All vehicles

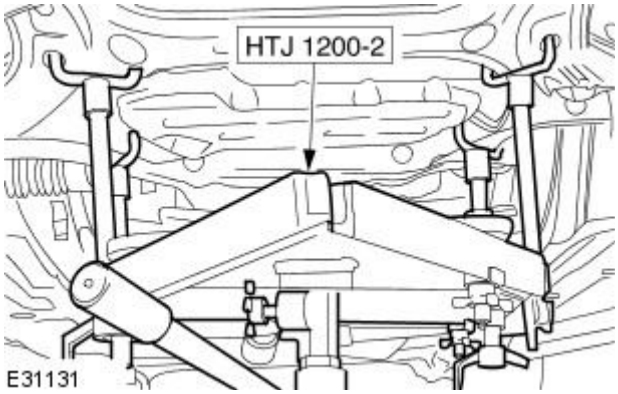


**1.** CAUTION: When raising the special tool care must be taken to manoeuvre the special tool so that the front subframe does not touch the air conditioning (A/C) pipes. Failure to follow this instruction may result in damage to the A/C pipes.

Install the front subframe.

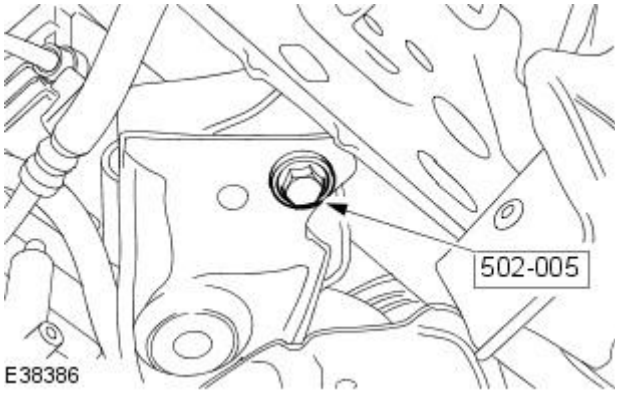


**2.** NOTE: Left-hand shown, right-hand similar.

Install the special tool.

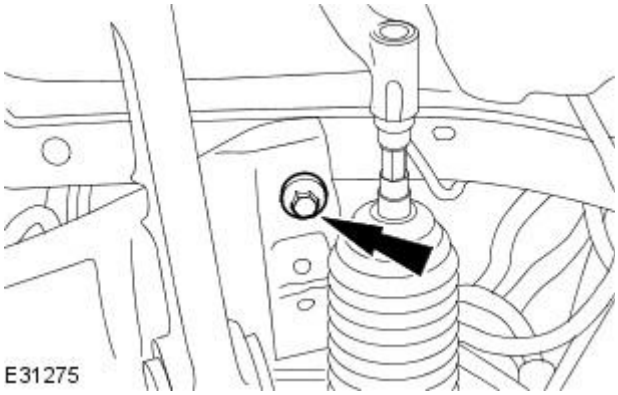


**3.** NOTE: Left-hand shown, right-hand similar.

Install the front subframe rear retaining bolt.

- Tighten to 80 Nm + 240°.

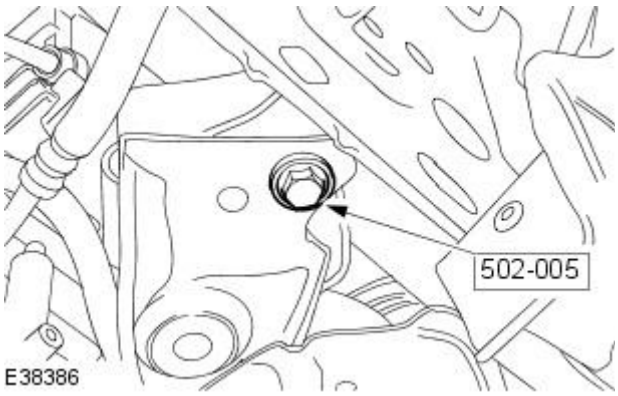


**4.** Remove the special tool.

GETtheMANUALS.org

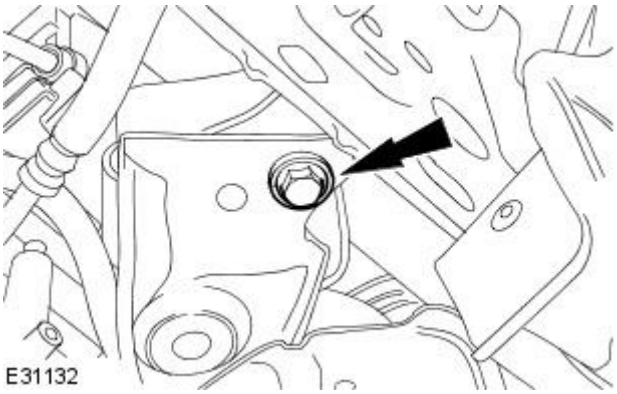


**5.** Install the front subframe front retaining bolt.

- Tighten to 150 Nm + 240°.

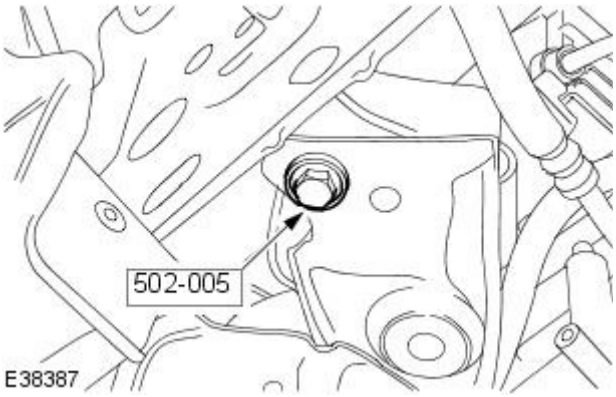


**6.** Remove the special tool.

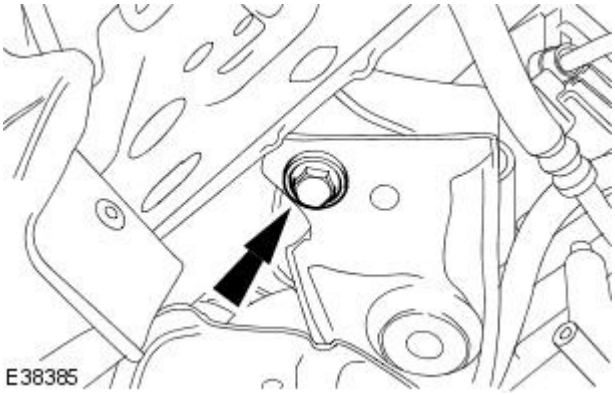


**7.** Install the front subframe front retaining bolt.

- Tighten to 150 Nm + 240°.

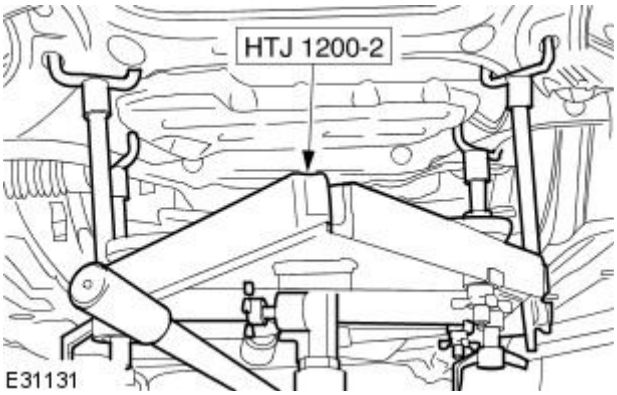


**8.** Remove the special tool.

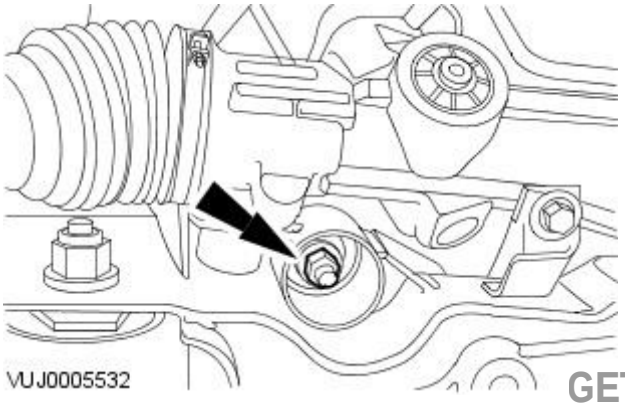


**9.** NOTE: Left-hand shown, right-hand similar.

Install the engine mount retaining nut.

- Tighten to 63 Nm.

GETtheMANUALS.org

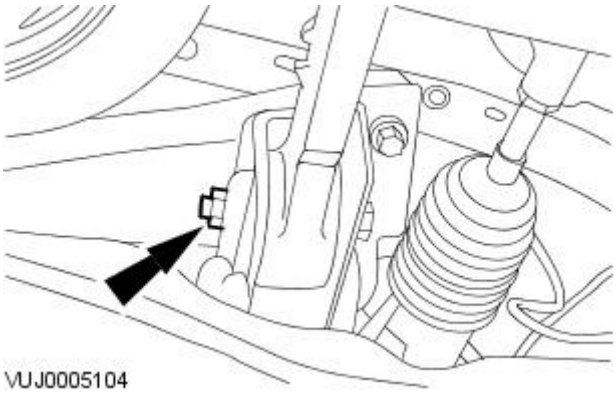


**10.** CAUTION: The final tightening of the rear lower arm inner retaining nut and bolt must be carried out with the vehicle on its wheels.

• NOTE: Left-hand shown, right-hand similar.

Install the rear lower arm.

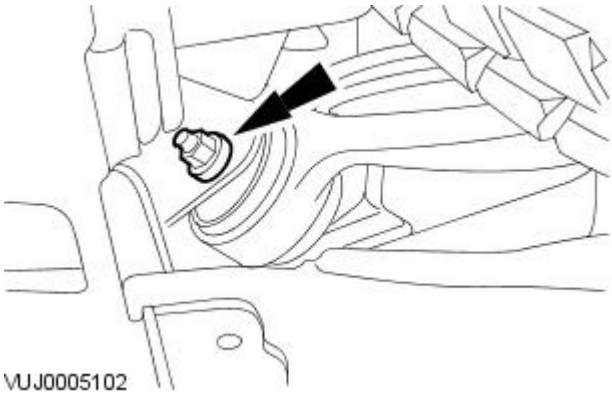


**11.** CAUTION: The final tightening of the front lower arm inner retaining nut and bolt must be carried out with the vehicle on its wheels.

• NOTE: Left-hand shown, right-hand similar.

Install the front lower arm.

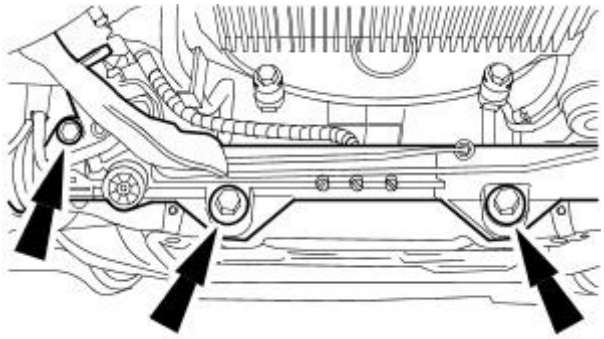


**12.** Install the steering gear.

- Tighten to 100 Nm.

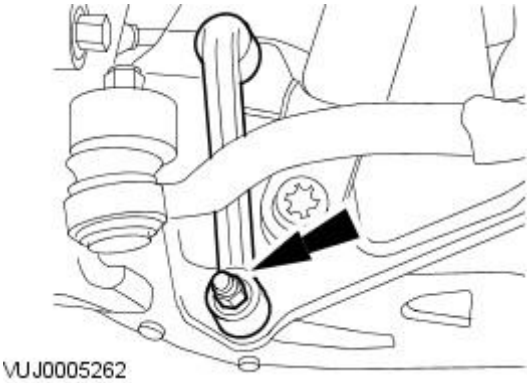


**13.** Install the stabilizer bar link.

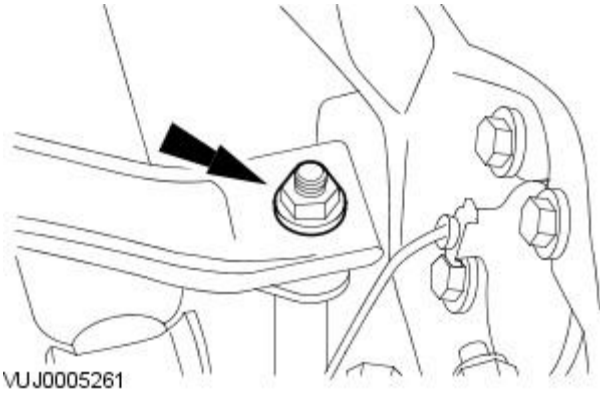


**14.** Attach the stabilizer bar link and install the stabilizer bar link retaining nut.

- Tighten to 43 Nm.

GETtheMANUALS.org

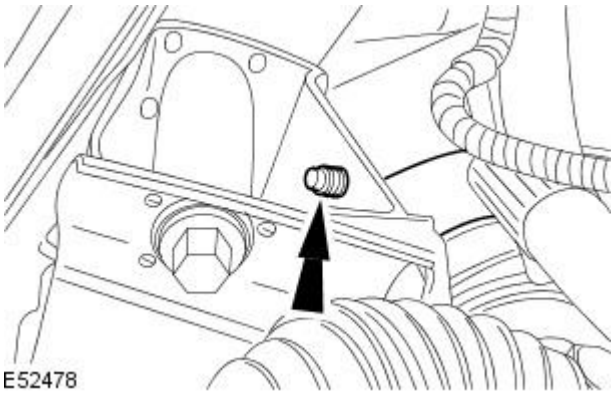


**15.** Attach the power steering hose retaining clip to the front subframe.

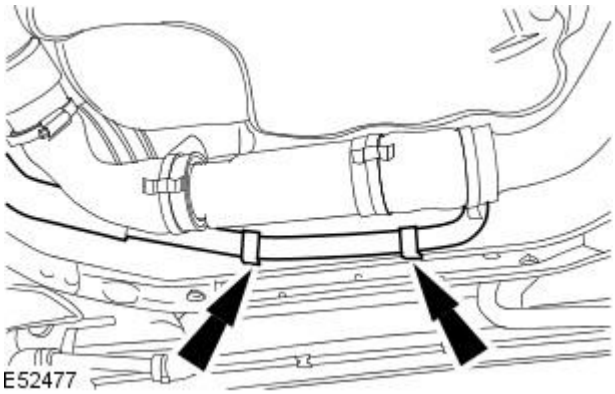


**16.** Attach the engine coolant inlet pipe to the front subframe.

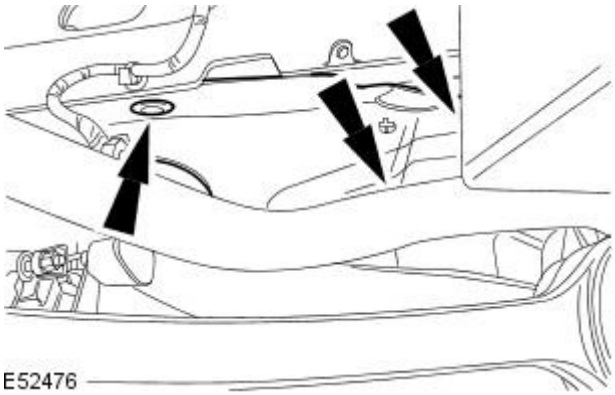


**17.** Install the right-hand splash shield.

Vehicles with automatic transmission

**18.** Install the transmission fluid cooler.
For additional information, refer to: Transmission Fluid Cooler (307-02 Transmission/Transaxle Cooling, Removal and Installation).

All vehicles

**19.** Install both the front wheel and tires.
For additional information, refer to: Wheel and Tire (204-04 Wheels and Tires, Removal and Installation).

**20.** Install the radiator splash shield.
For additional information, refer to: Radiator Splash Shield (501-02 Front End Body Panels, Removal and Installation).

**21.** Install the air deflector.
For additional information, refer to: Air Deflector (501-02 Front End Body Panels, Removal and Installation).

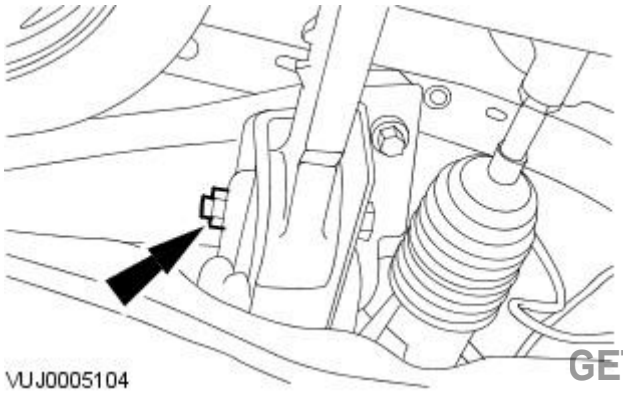


**22.** CAUTION: The final tightening of the rear lower arm inner retaining nut and bolt must be carried out with the vehicle on its wheels.

• NOTE: Left-hand shown, right-hand similar.

Tighten to 175 Nm.

GETtheMANUALS.org

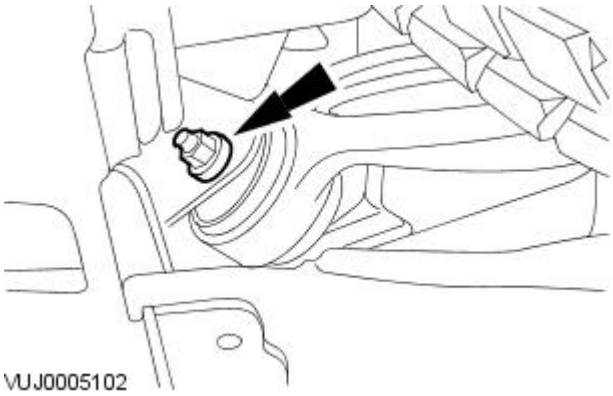


**23.** CAUTION: The final tightening of the front lower arm inner retaining nut and bolt must be carried out with the vehicle on its wheels.

• NOTE: Left-hand shown, right-hand similar.

Tighten to 175 Nm.

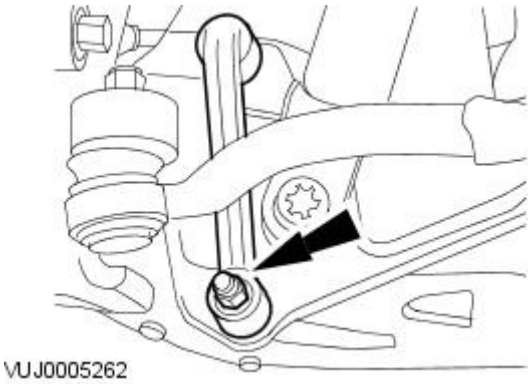


**24.** NOTE: Left-hand shown, right-hand similar.

Tighten to 70 Nm.

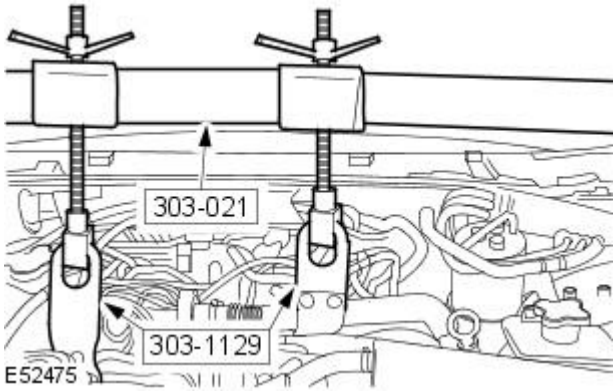


**25.** Remove the special tool.

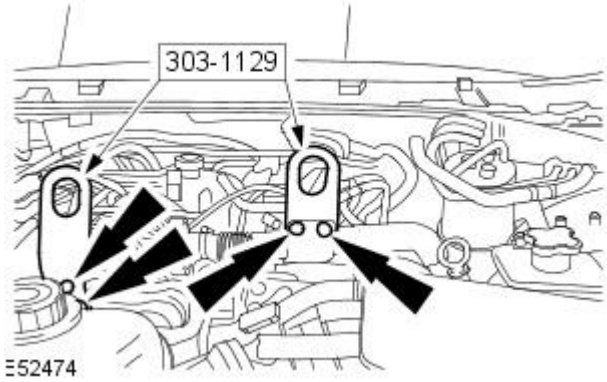


**26.** Remove the special tool.

**27.** Install the intake air shutoff throttle.
For additional information, refer to: Intake Air Shutoff Throttle (303-04C Fuel Charging and Controls - 2.7L V6 - TdV6, Removal and Installation).

GETtheMANUALS.org

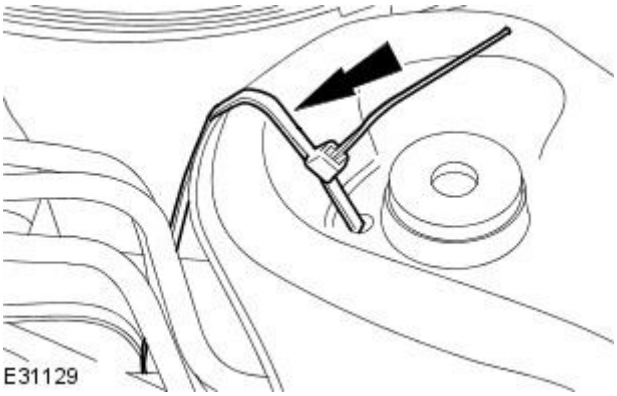


**28.** NOTE: Right-hand shown left-hand similar.

Remove the tie strap(s).

GETtheMANUALS.org

# Uni-Body, Subframe and Mounting System - Front SubframeV8 4.2L Petrol/V8 S/C 4.2L Petrol

Removal and Installation

| Special Tool(s) | |
|---|---|
| 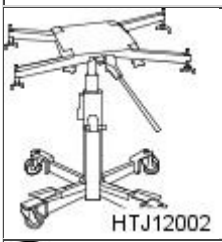 HTJ12002 | Powertrain Assembly Jack<br><br>HTJ1200-02 |
| 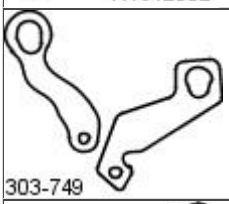 303-749 | Engine Lifting Brackets<br><br>303-749 |
| 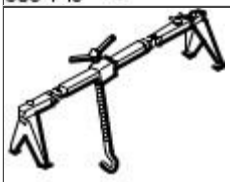 303-021 | Engine Support Bracket<br><br>303-021 |
| 502-005 | Subframe Alignment Bolt<br><br>502-005 |

## Removal

All vehicles

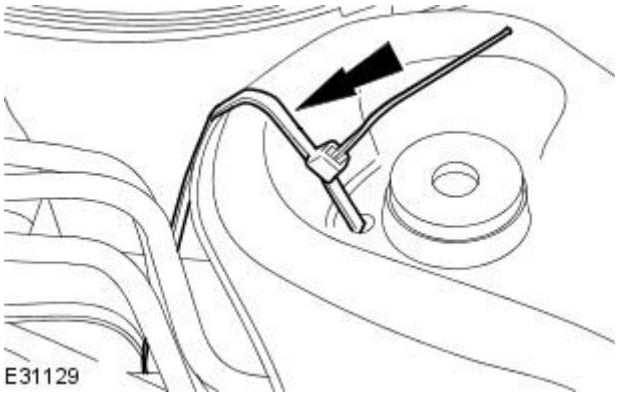


1. NOTE: Right-hand shown left-hand similar.

   Support the radiator.

Vehicles with 4.2L engine without supercharger

2. Remove the throttle body.
   For additional information, refer to: Throttle Body - Vehicles With: Supercharger, VIN Range: M45255->N52047 (303-04B Fuel Charging and Controls - V8 4.2L Petrol/V8 S/C 4.2L Petrol, Removal and Installation).

All vehicles

GETtheMANUALS.org

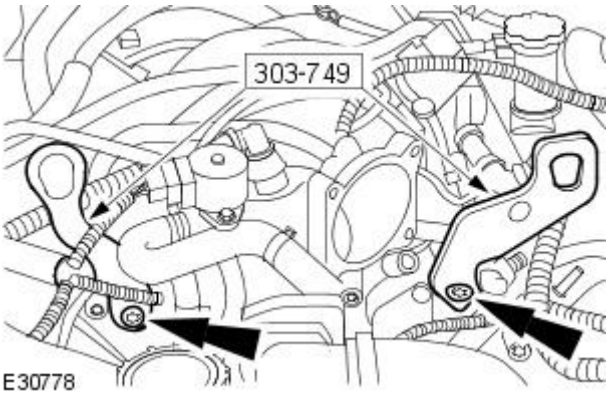


**3.** NOTE: Vehicles with 4.2L engine without supercharger shown, Vehicles with 4.2L engine with supercharger similar.

Install the special tools.

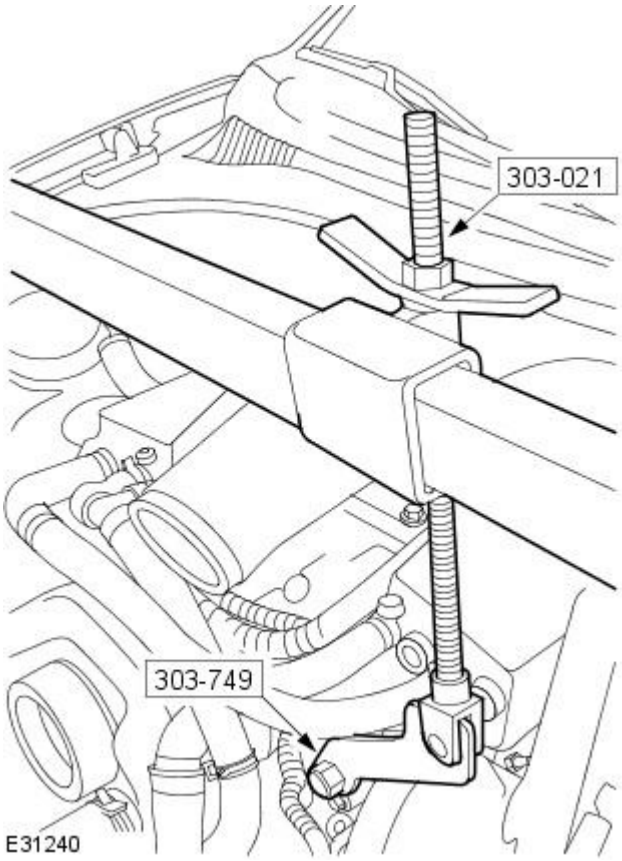


**4.** NOTE: Vehicles with 4.2L engine with supercharger shown, Vehicles with 4.2L engine without supercharger similar.

• NOTE: Right-hand shown, Left-hand similar.

Install the special tool.

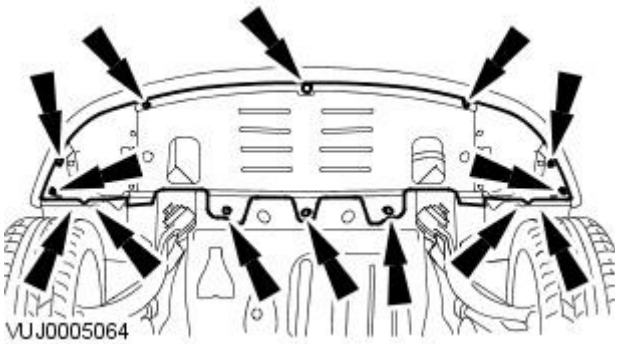


**5.** Remove the radiator splash shield.

**6.** Remove both the front wheel and tires.
For additional information, refer to: Wheel and Tire (204-04 Wheels and Tires, Removal and Installation).

GETtheMANUALS.org

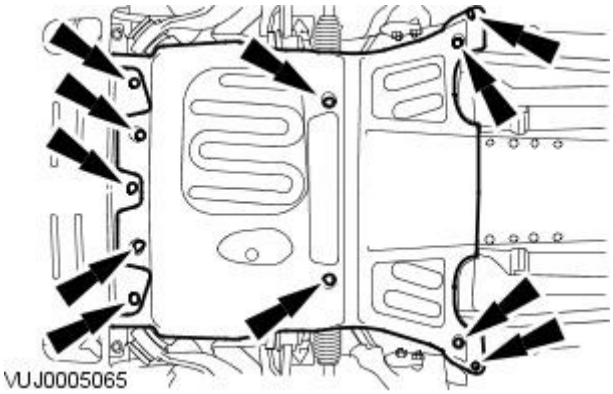


**7.** Remove the air deflector.

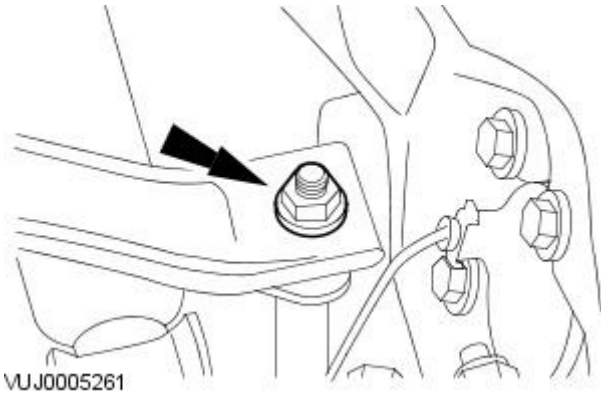


**8.** NOTE: Left-hand shown, right-hand similar.

Remove the stabilizer bar link retaining nut.

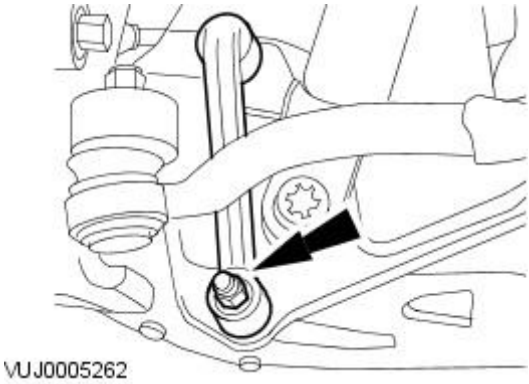


**9.** NOTE: Left-hand shown, right-hand similar.

Remove the stabilizer bar link.

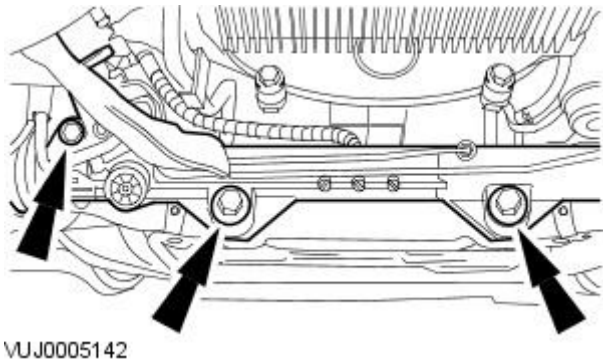


**10.** Detach the steering gear.

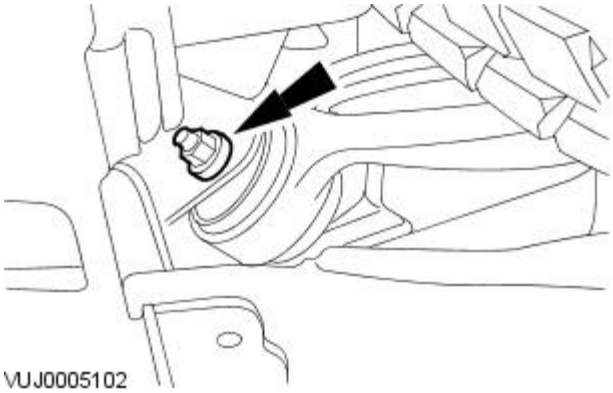


**11.** NOTE: Left-hand shown, right-hand similar.

Detach the front lower arm.

GETtheMANUALS.org

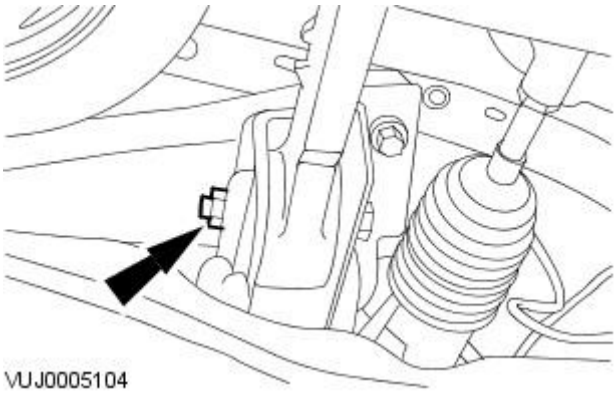


**12.** NOTE: Left-hand shown, right-hand similar.

Detach the rear lower arm.

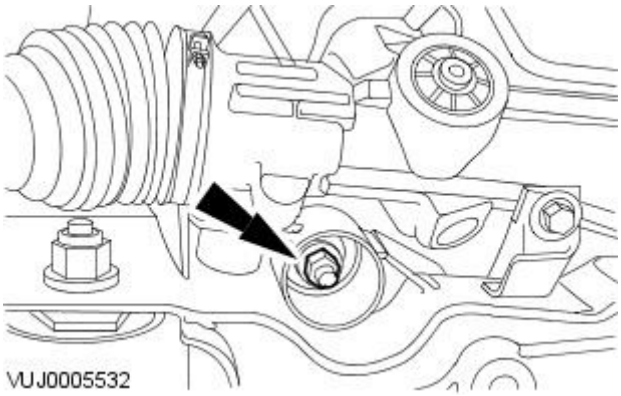


**13.** NOTE: Left-hand shown, right-hand similar.

Detach the engine mount.

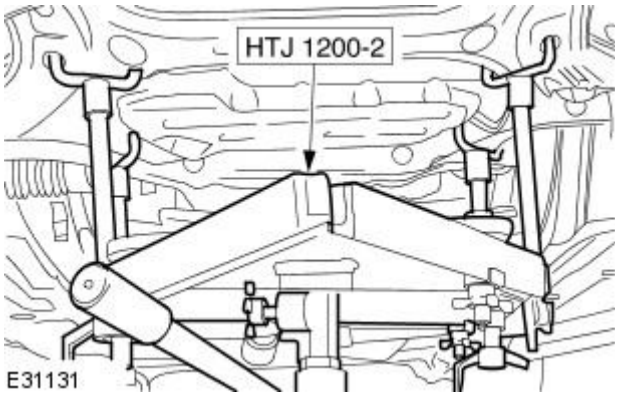


**14.** Install the special tool.

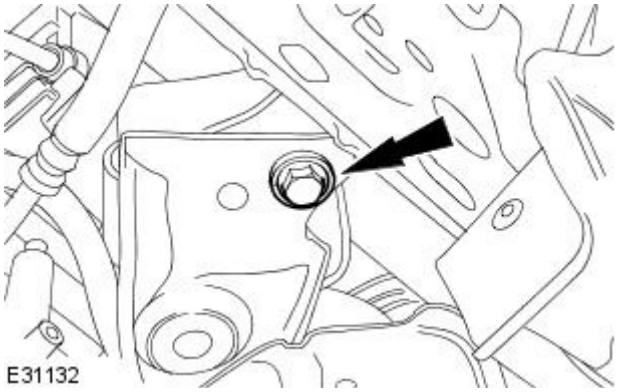


**15.** NOTE: Left-hand shown, right-hand similar.

Remove the front subframe front retaining bolt.

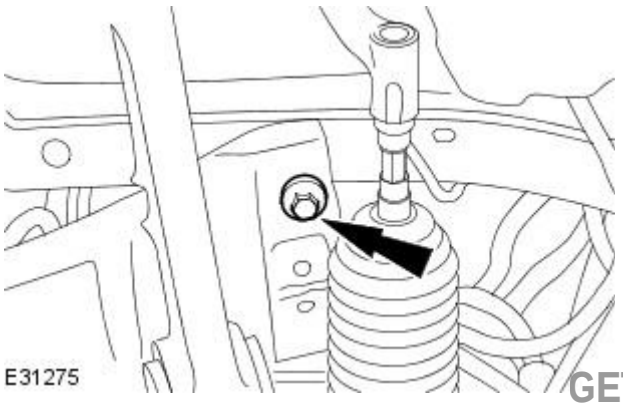


**16.** NOTE: Left-hand shown, right-hand similar.

Remove the front subframe rear retaining bolts.

GETtheMANUALS.org

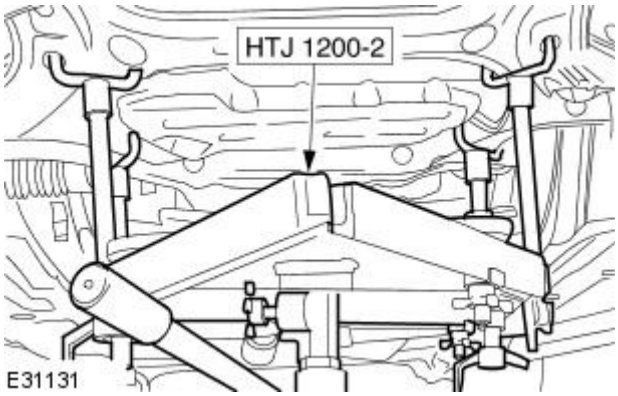


**17.** Remove the front subframe.

## Installation

All vehicles

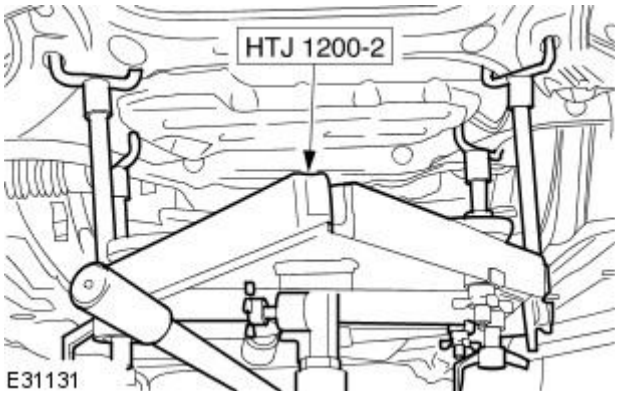


**1.** Install the front subframe.

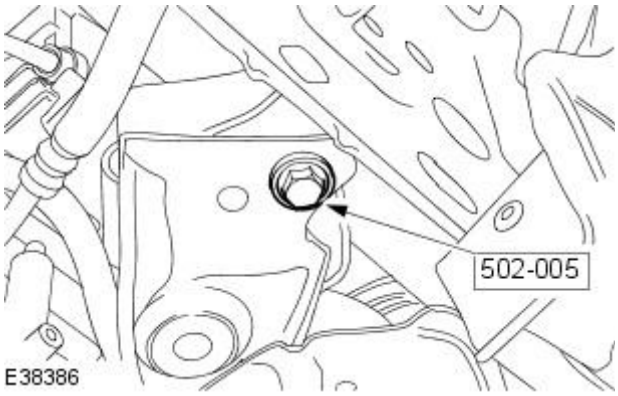


**2.** NOTE: Left-hand shown, right-hand similar.

Install the special tool.

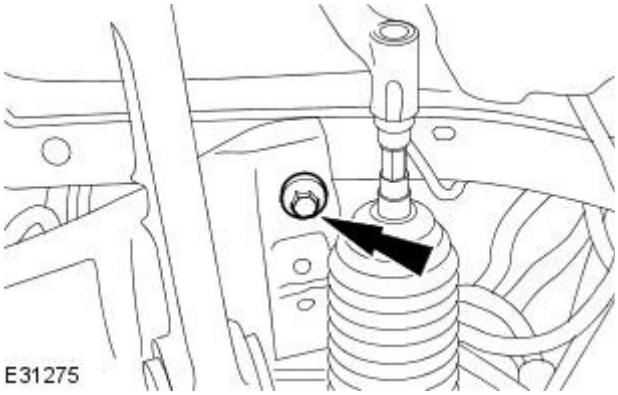


**3.** NOTE: Left-hand shown, right-hand similar.

Install the front subframe rear retaining bolts.

- Tighten to 80 Nm + 240°.

GETtheMANUALS.org

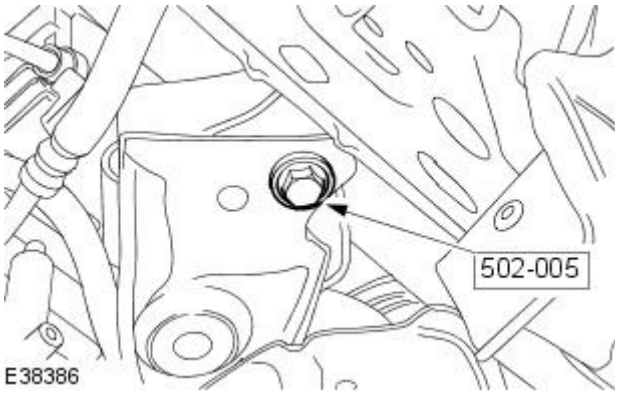


**4.** Remove the special tool.

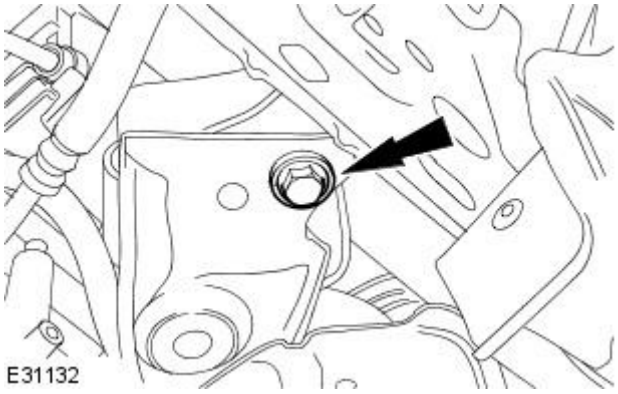


**5.** Install the front subframe front retaining bolt.

- Tighten to 150 Nm + 240°.

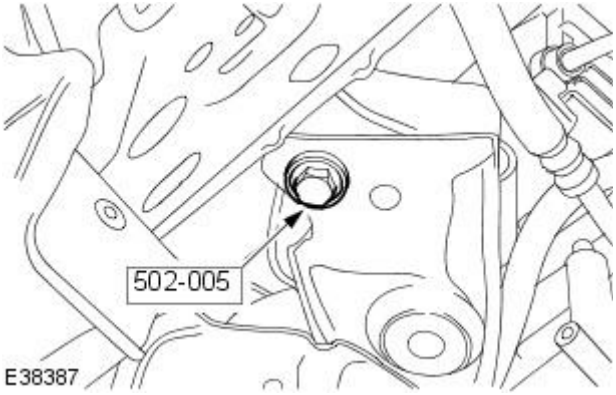


**6.** Remove the special tool.

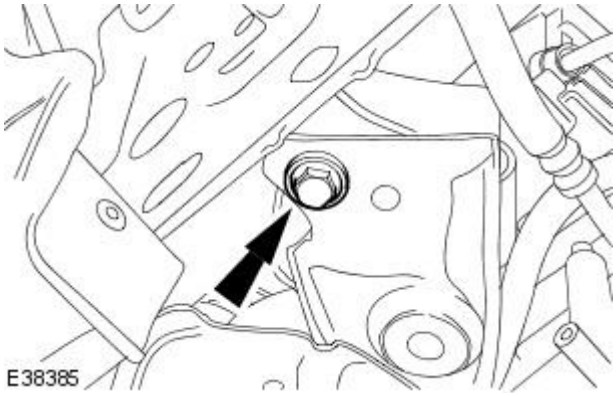


**7.** Install the front subframe front retaining bolt.

- Tighten to 150 Nm + 240°.

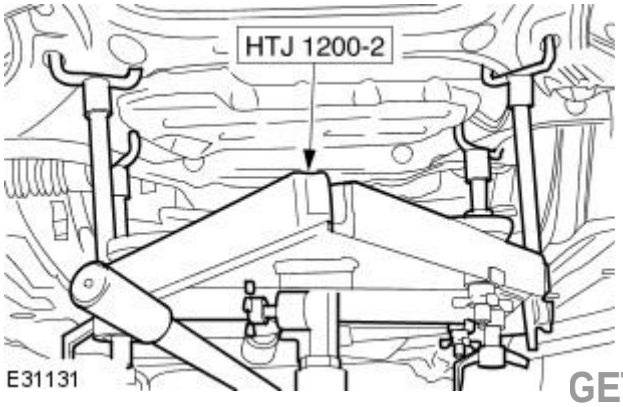


**8.** Remove the special tool.

GETtheMANUALS.org

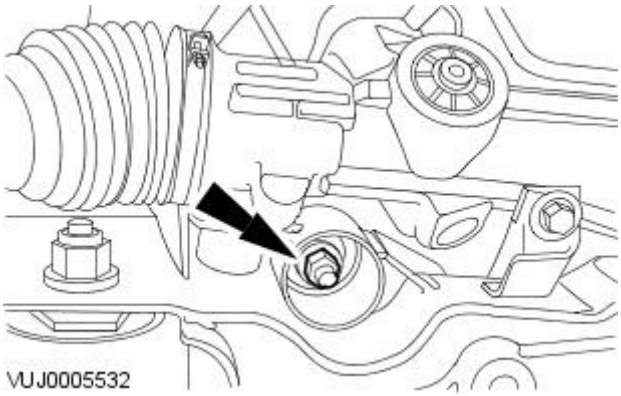


**9.** NOTE: Left-hand shown, right-hand similar.

Install the engine mount.

- Tighten to 63 Nm.

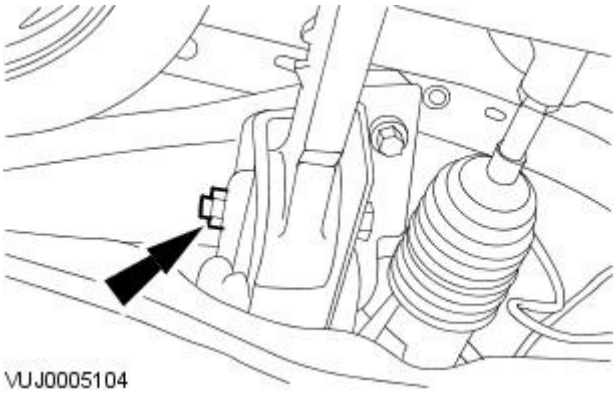


**10.** CAUTION: The final tightening of the rear lower arm inner retaining nut and bolt must be carried out with the vehicle on its wheels.

• NOTE: Left-hand shown, right-hand similar.

Install the rear lower arm.

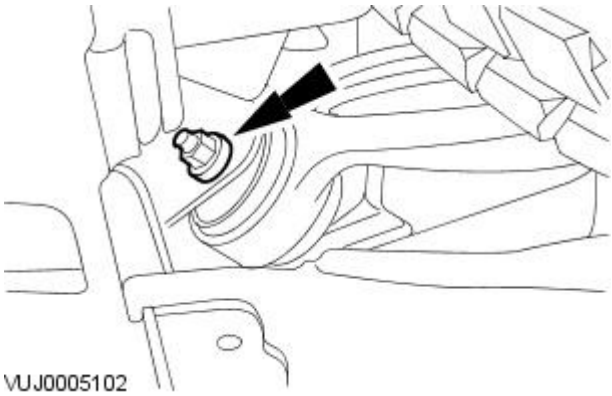


**11.** CAUTION: The final tightening of the front lower arm inner retaining nut and bolt must be carried out with the vehicle on its wheels.

• NOTE: Left-hand shown, right-hand similar.

Install the front lower arm.

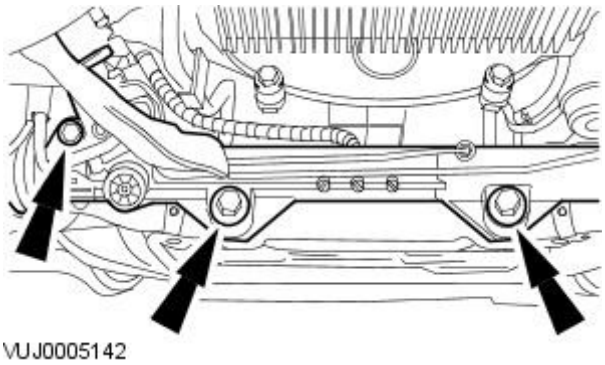


**12.** Install the steering gear.

- Tighten to 100 Nm.

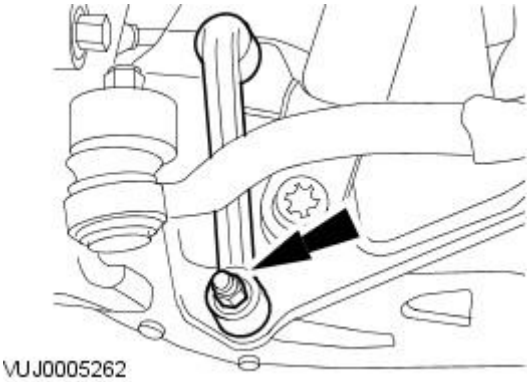


**13.** Install the stabilizer bar link.

GETtheMANUALS.org

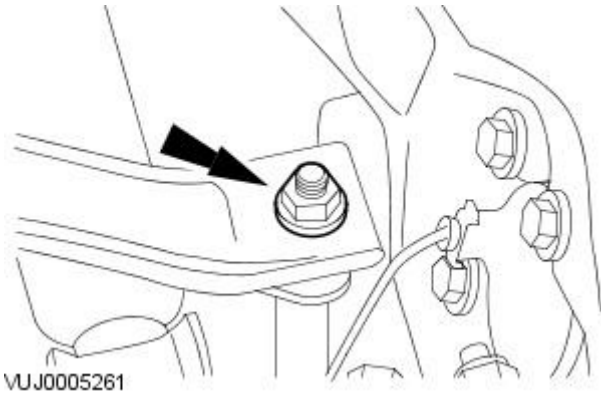


**14.** Attach the stabilizer bar link.

- Tighten to 43 Nm.

**15.** Check the front subframe alignment.

**16.** Install both the front wheel and tires.
For additional information, refer to: Wheel and Tire (204-04 Wheels and Tires, Removal and Installation).

**17.** Install the radiator splash shield.

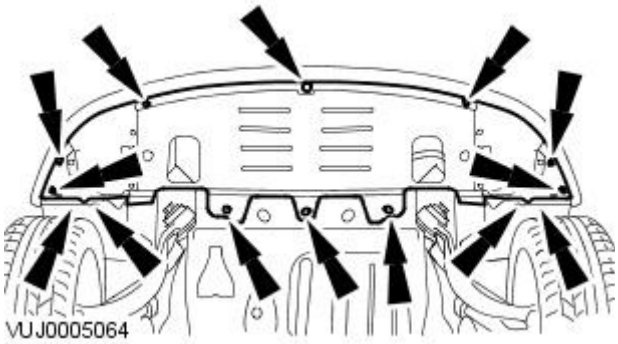


**18.** Install the air deflector.

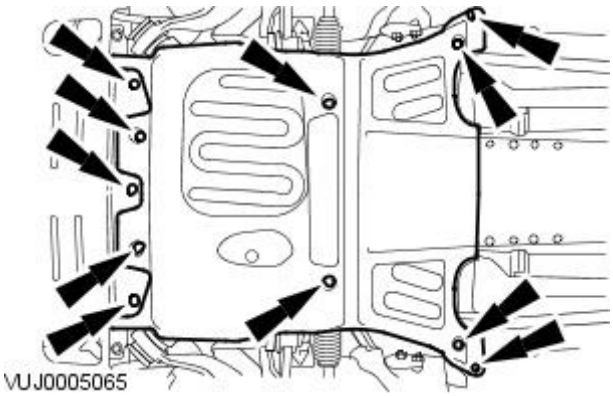


**19.** CAUTION: The final tightening of the rear lower arm inner retaining nut and bolt must be carried out with the vehicle on its wheels.

• NOTE: Left-hand shown, right-hand similar.

Tighten to 175 Nm.

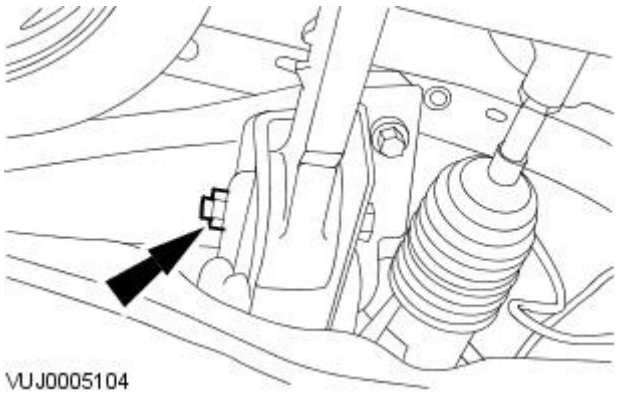


GETtheMANUALS.org

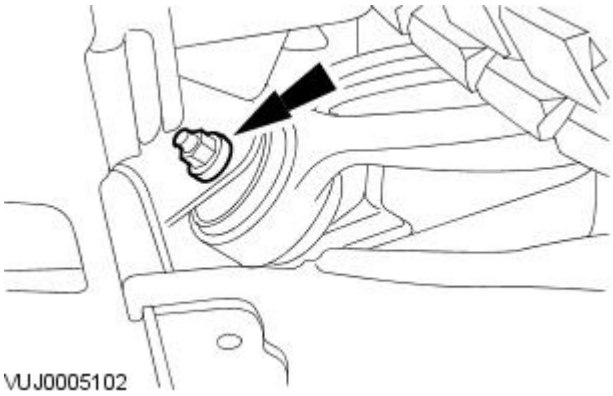


**20.** CAUTION: The final tightening of the front lower arm inner retaining nut and bolt must be carried out with the vehicle on its wheels.

• NOTE: Left-hand shown, right-hand similar.

Tighten to 175 Nm.

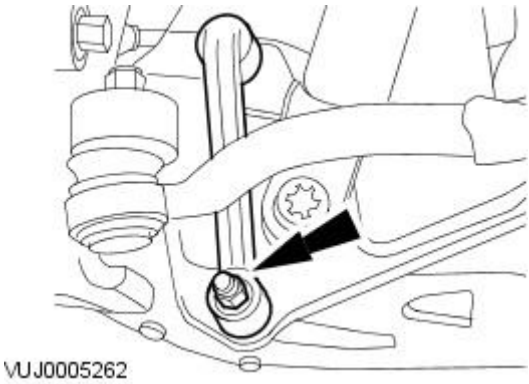


**21.** NOTE: Left-hand shown, right-hand similar.

Tighten to 70 Nm.

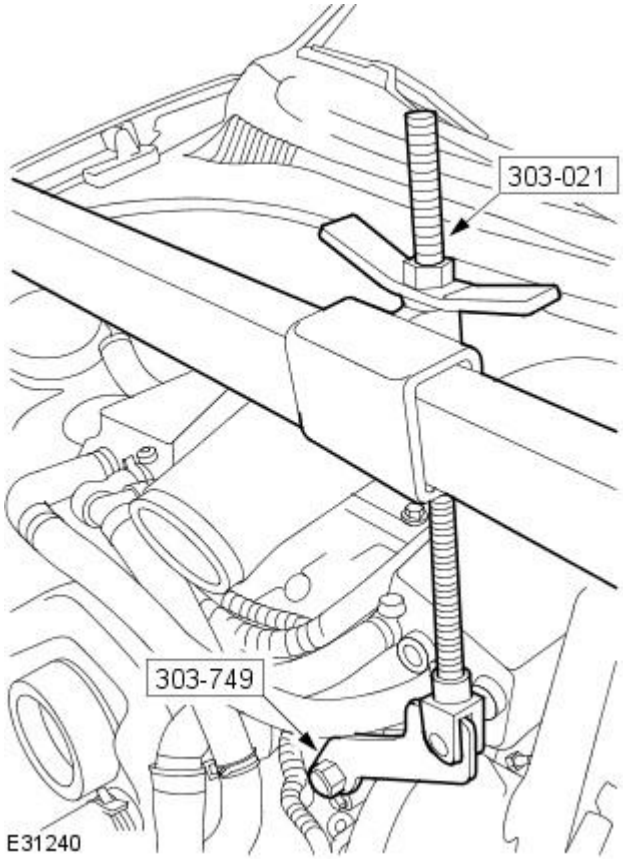


**22.** NOTE: Vehicles with 4.2L engine with supercharger shown, Vehicles with 4.2L engine without supercharger similar.

• NOTE: Right-hand shown, Left-hand similar.

Remove the special tool.

- Loosen the special tool adjustment bolts.

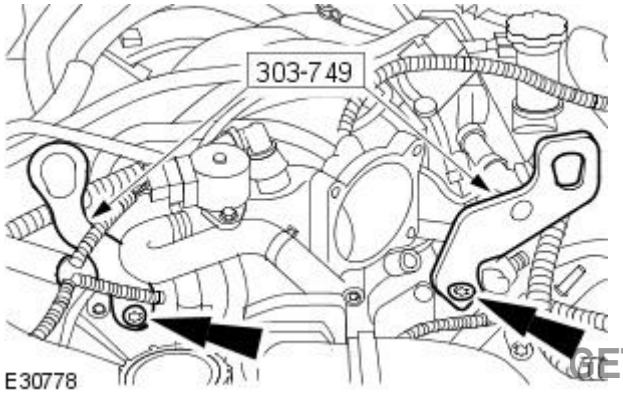


**23.** NOTE: Vehicles with 4.2L engine without supercharger shown, Vehicles with 4.2L engine with supercharger similar.

Remove the special tools.

GETtheMANUALS.org

Vehicles with 4.2L engine without supercharger

**24.** Install the throttle body.
For additional information, refer to: Throttle Body - Vehicles With: Supercharger, VIN Range: M45255->N52047 (303-04B Fuel Charging and Controls - V8 4.2L Petrol/V8 S/C 4.2L Petrol, Removal and Installation).

All vehicles

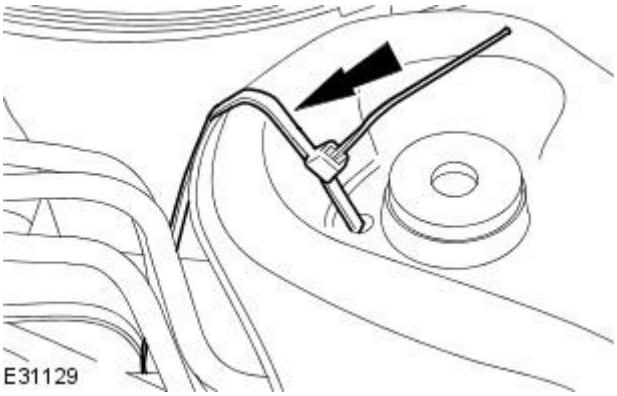


**25.** NOTE: Right-hand shown left-hand similar.

Remove the radiator support.

GETtheMANUALS.org

# Uni-Body, Subframe and Mounting System - Rear Subframe

Removal and Installation

| Special Tool(s) | |
|---|---|
| 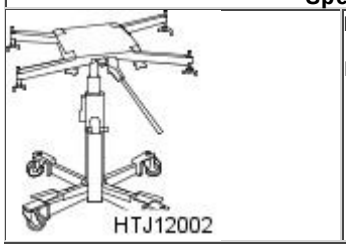 HTJ12002 | Powertrain assembly jack<br><br>HTJ1200-2 |

## Removal

1. Drain the right-hand fuel tank saddle.
   For additional information, refer to: Fuel Tank Draining - VIN Range: N52048->N99999 (310-00 Fuel System - General Information, General Procedures).
2. Remove the exhaust system.
   For additional information, refer to: Exhaust System - V8 4.2L Petrol/V8 S/C 4.2L Petrol/2.5L NA V6 - AJV6/3.0L NA V6 - AJ27 (309-00 Exhaust System, Removal and Installation).
3. Remove the axle assembly.
   For additional information, refer to: Axle Assembly - Vehicles Without: Differential Drain Plug (205-02 Rear Drive Axle/Differential, Removal and Installation).
4. Remove both the upper arms.
   For additional information, refer to: Upper Arm (204-02 Rear Suspension, Removal and Installation).
5. Disconnect the electric parking brake electrical connector.

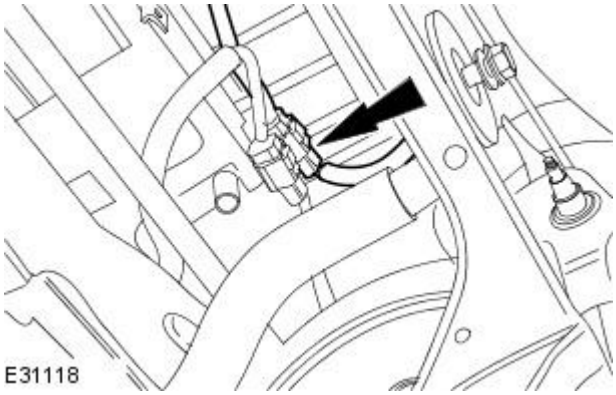
E31118

6. Detach the wiring harness.

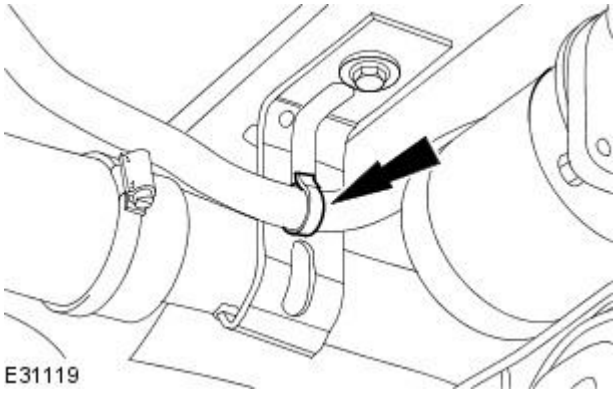
E31119

7. Detach the fuel filler hose.

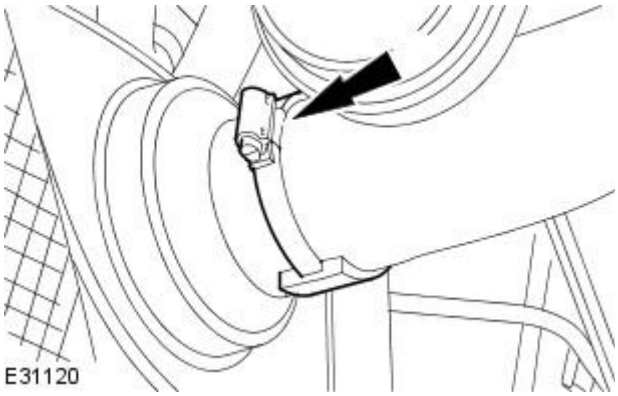
E31120

GETtheMANUALS.org

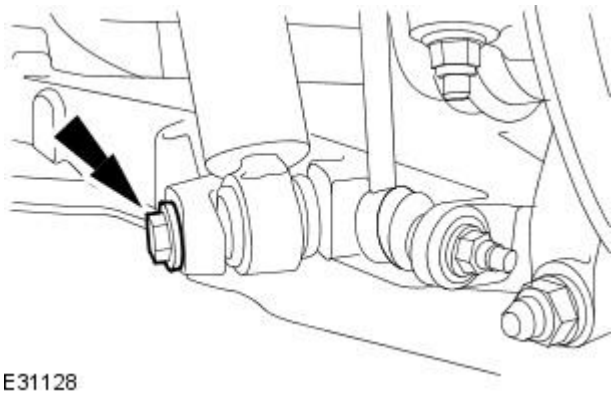


**8.** NOTE: Right-hand shown, left-hand similar.

Detach the shock absorber.

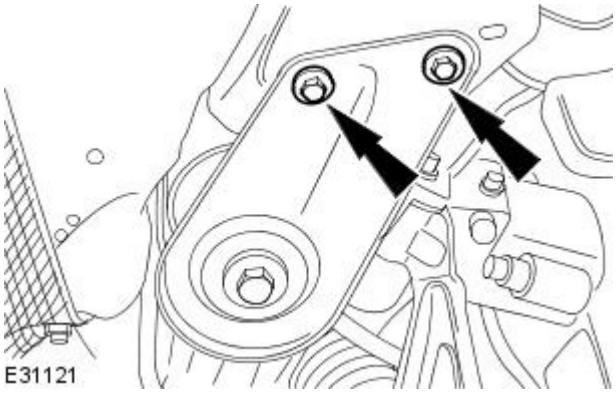


**9.** NOTE: Left-hand shown, right-hand similar.

Remove the rear subframe reinforcement plate retaining bolts.

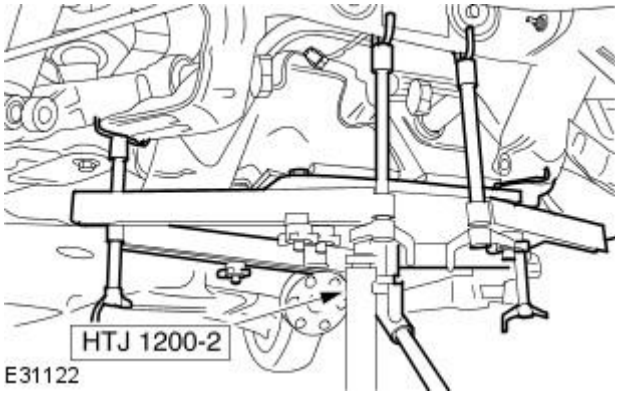


**10.** Install the special tool to support the rear subframe.

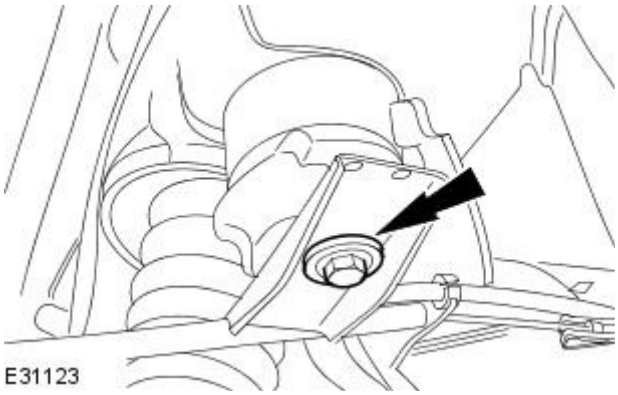


**11.** NOTE: Left-hand shown, right-hand similar.

Remove the rear subframe rear retaining bolt.

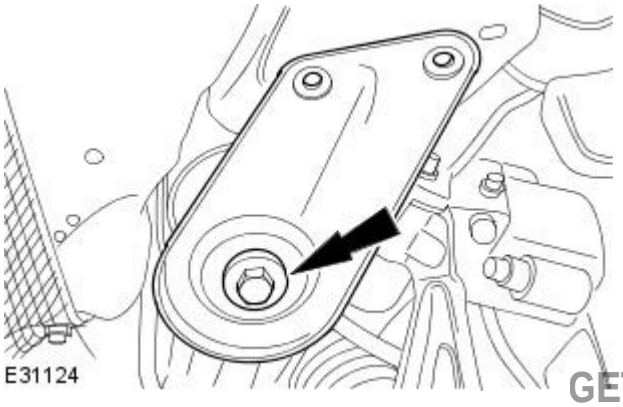


**12.** NOTE: Left-hand shown, right-hand similar.

Remove the rear subframe front retaining bolt.

GETtheMANUALS.org

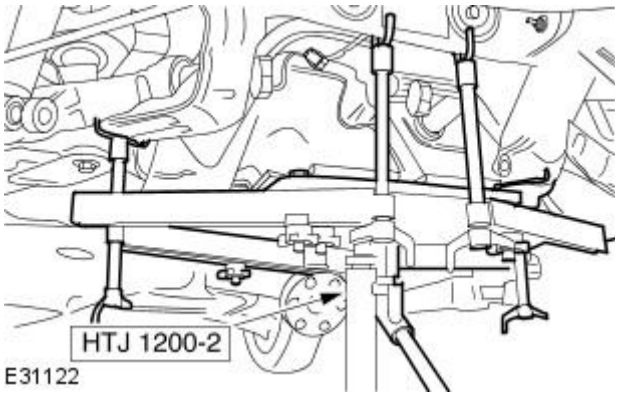


**13.** Remove the rear subframe.

## Installation

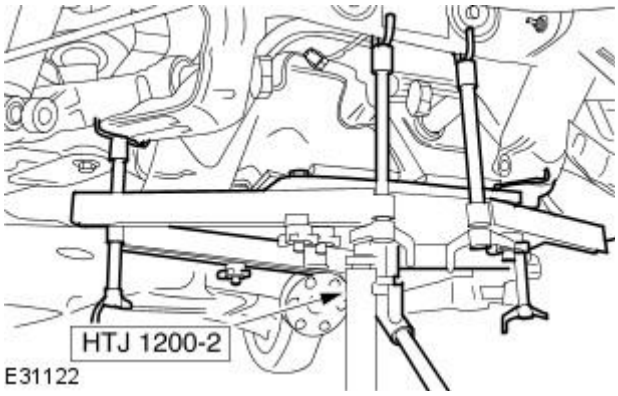


**1.** Install the rear subframe.

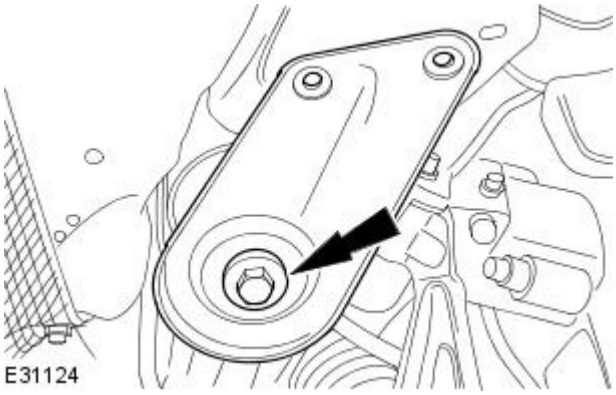


**2.** NOTE: Left-hand shown, right-hand similar.

Loosely install the rear subframe front bolt.

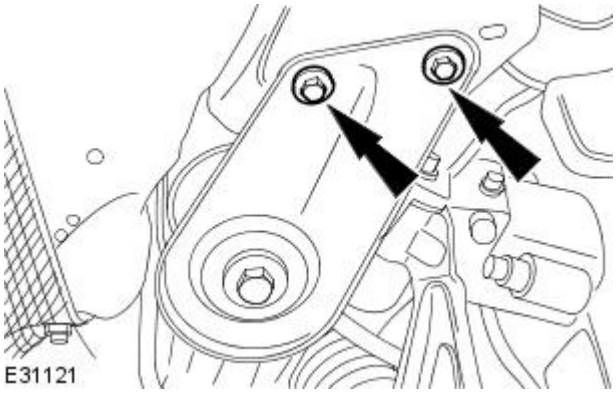


**3.** Loosely install the rear subframe reinforcement plate bolts

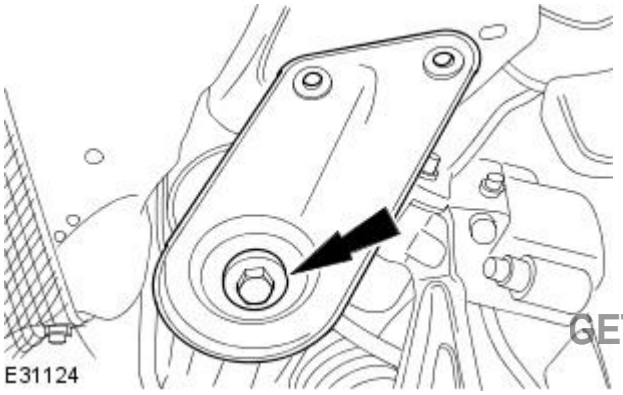


**4.** Tighten to 125 Nm.

GETtheMANUALS.org

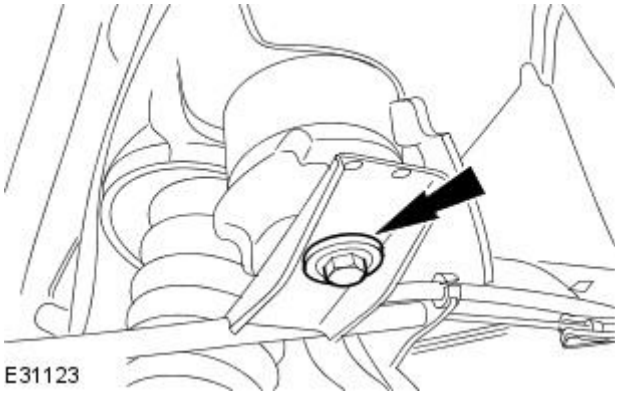


**5.** NOTE: Left-hand shown, right-hand similar.

Install the rear subframe rear retaining bolt.

- Tighten to 125 Nm.

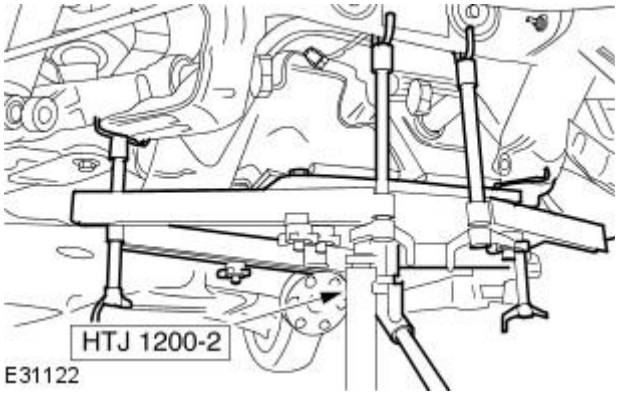


**6.** Remove the special tool.

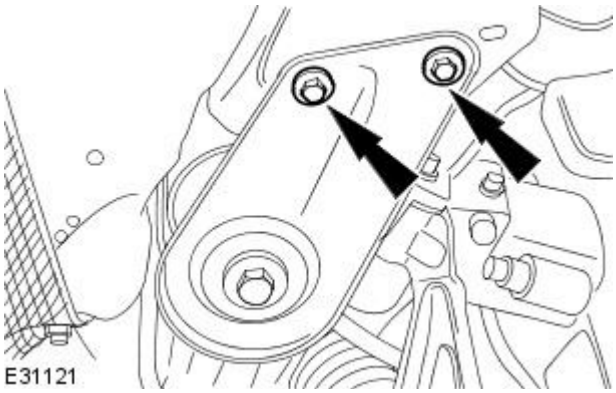


**7.** NOTE: Left-hand shown, right-hand similar.

Install the rear subframe reinforcement plate retaining bolts.

- Tighten to 47 Nm.

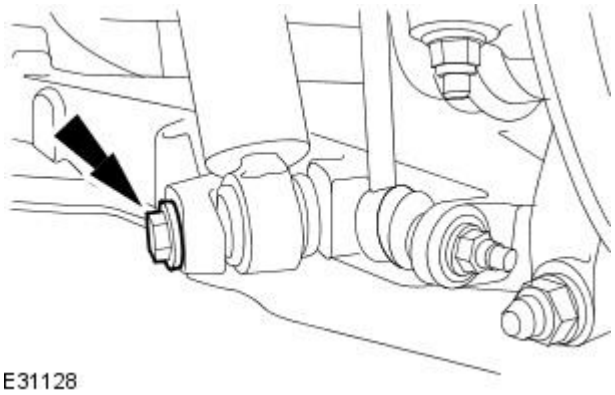


**8.** NOTE: Right-hand shown, left-hand similar.

Install the shock absorber.

1. Tighten to 133 Nm.

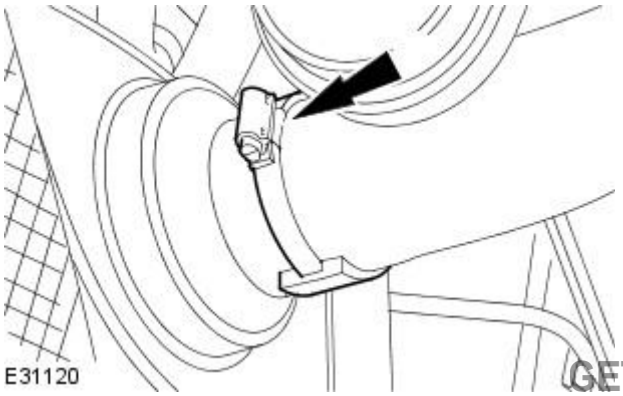


**9.** Install the fuel filler hose.

GETtheMANUALS.org

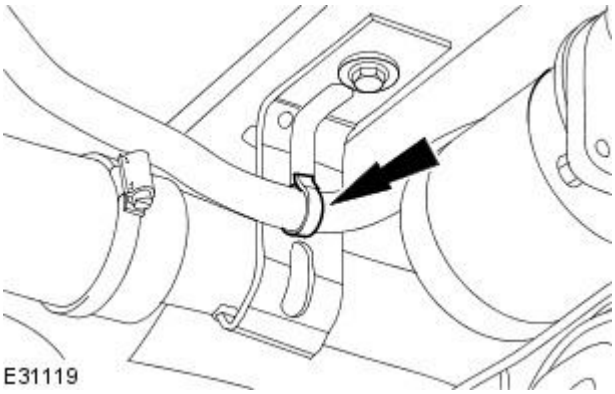


**10.** Install the wiring harness.

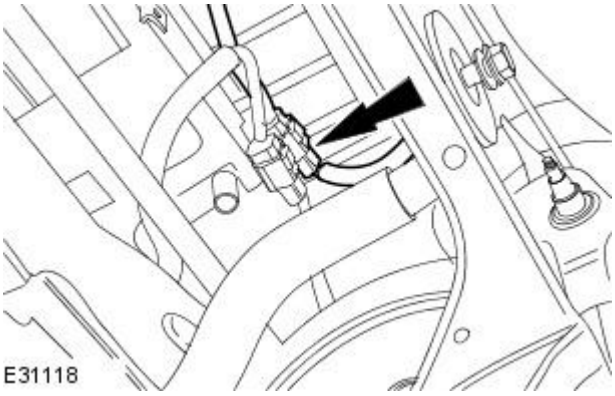


**11.** Connect the electric parking brake electrical connector.

**12.** Install both upper arms.
For additional information, refer to: Upper Arm (204-02 Rear Suspension, Removal and Installation).

**13.** Install the axle assembly.
For additional information, refer to: Axle Assembly - Vehicles Without: Differential Drain Plug (205-02 Rear Drive Axle/Differential, Removal and Installation).

**14.** Install the exhaust system.
For additional information, refer to: Exhaust System - V8 4.2L Petrol/V8 S/C 4.2L Petrol/2.5L NA V6 - AJV6/3.0L NA V6 - AJ27 (309-00 Exhaust System, Removal and Installation).

**15.** Refill the fuel tank.

**16.** Carry out rear toe adjustment.
For additional information, refer to: Rear Toe Adjustment (204-00 Suspension System - General Information, General Procedures).
Carry out front toe adjustment.
For additional information, refer to: Front Toe Adjustment (204-00 Suspension System - General Information, General Procedures).

GETtheMANUALS.org

# Uni-Body, Subframe and Mounting System - Rear Subframe Front Bushing

Removal and Installation

| Special Tool(s) | |
|---|---|
| 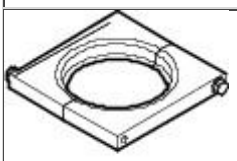 204-479 | Remover Support - Bush<br>204-479 |
| 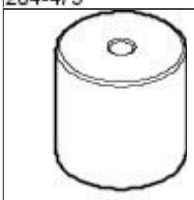 204-481 | Receiver - Bush<br>204-481 |
| 204-482 | Remover - Bush<br>204-482 |
| 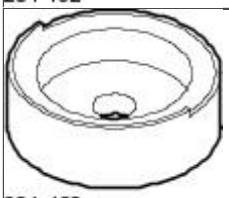 204-480 | Support - Bush<br>204-480 |
| 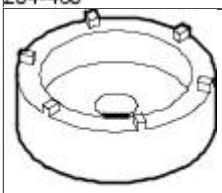 204-483 | Installer - Bush<br>204-483 |

## Removal

1. Remove the rear subframe.
   For additional information, refer to Rear Subframe - in this section.
2. Install the special tool to the rear subframe front bushing.

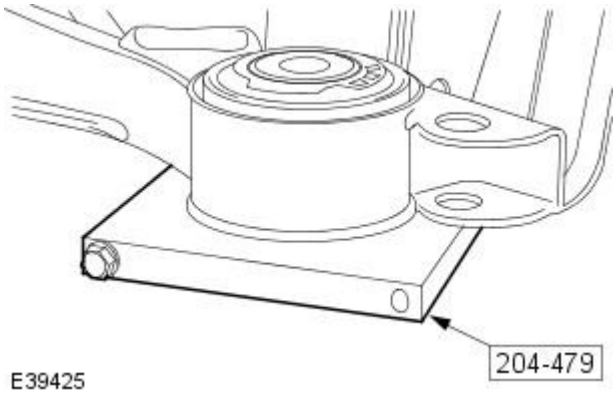


3. NOTE: Note the orientation of the bushing before removal.

   Using the special tools, remove the rear subframe front bushing.

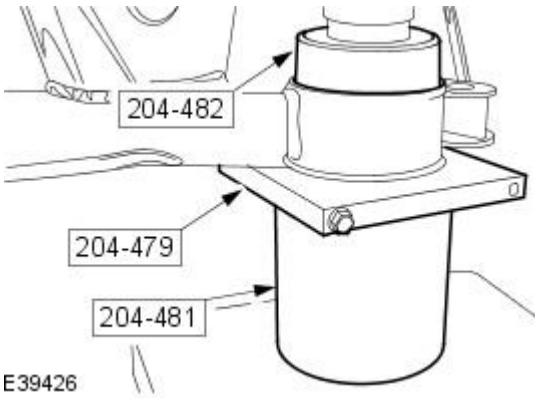


GETtheMANUALS.org

## Installation

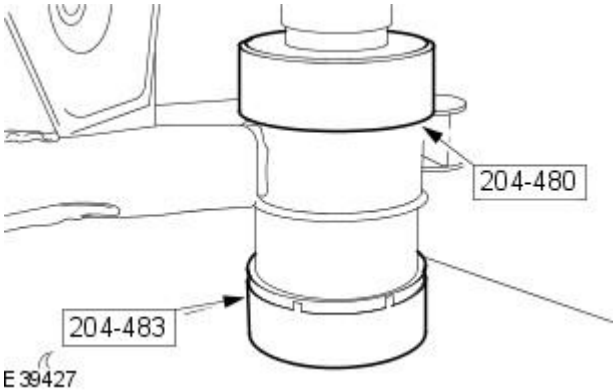


**1.** NOTE: Make sure the bushing is correctly orientated.

Using the special tools, install the rear subframe front bushing.

**2.** Install the rear subframe.
For additional information, refer to Rear Subframe - in this section.

GETtheMANUALS.org

# Uni-Body, Subframe and Mounting System - Rear Subframe Rear Bushing

Removal and Installation

| Special Tool(s) | |
|---|---|
| 204-469 | Forcing bolt<br><br>204-469 |
| 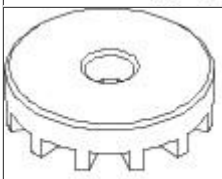 204-473 | Remover - bush<br><br>204-473 |
| 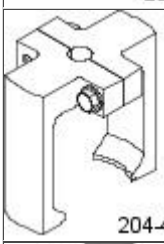 204-472 | Remover support - bush<br><br>204-472 |
| 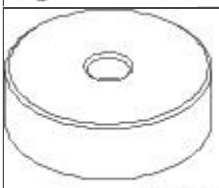 204-475 | Receiver - bush<br><br>204-475 |
| 204-474 | Replacer - bush<br><br>204-474 |

## Removal

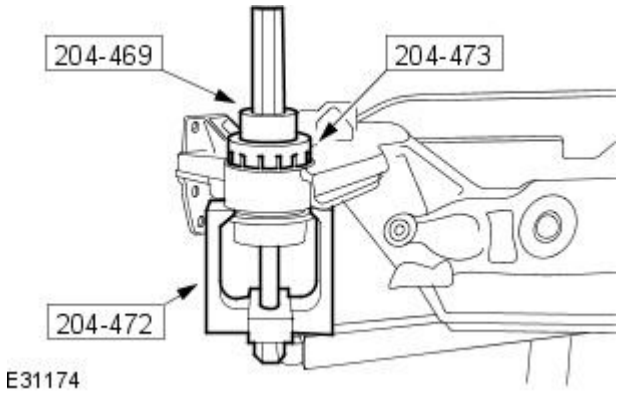


1. Remove the rear subframe.
   For additional information, refer to Rear Subframe in this section.
2. NOTE: Note the orientation of the bushing before removal.

   Using the special tools, remove the rear subframe rear bushing.

## Installation

GETtheMANUALS.org

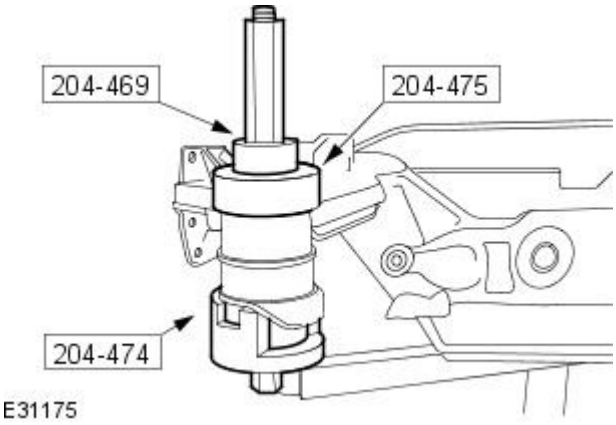


**1.** NOTE: Make sure the bushing is correctly orientated.

Using the special tools, install the rear subframe rear bushing.

**2.** Install the rear subframe.
For additional information, refer to Rear Subframe in this section.

GETtheMANUALS.org