FOREWORD

This wiring diagram manual has been prepared to provide information on the electrical system of the 2002 PRIUS.

Applicable models: NHW11 Series

For service specifications and repair procedures of the above models other than those listed in this manual, refer to the following manuals;

Manual Name	Pub. No.
● 2002 PRIUS Repair Manual	
Volume 1	RM883U1
Volume 2	RM883U2
● 2002 TOYOTA New Car Features	NCF214U

All information in this manual is based on the latest product information at the time of publication. However, specifications and procedures are subject to change without notice.

TOYOTA MOTOR CORPORATION

CAUTION

When repairing the hybrid vehicle (HV), always follow the direction given in the repair manual listed above to prevent electrical shock, leakage or explosion.

NOTICE

When handling supplemental restraint system components (removal, installation or inspection, etc.), always follow the direction given in the repair manuals listed above to prevent accidents and supplemental restraint system malfunction.

cardiagn.com

A INTRODUCTION

This manual consists of the following 13 sections:

No.	Section	Description
A	INDEX	Index of the contents of this manual.
	INTRODUCTION	Brief explanation of each section.
B	HOW TO USE THIS MANUAL	Instructions on how to use this manual.
C	TROUBLE–SHOOTING	Describes the basic inspection procedures for electrical circuits.
D	ABBREVIATIONS	Defines the abbreviations used in this manual.
E	GLOSSARY OF TERMS AND SYMBOLS	Defines the symbols and functions of major parts.
F	RELAY LOCATIONS	Shows position of the Electronic Control Unit, Relays, Relay Block, etc. This section is closely related to the system circuit.
G	ELECTRICAL WIRING ROUTING	Describes position of Parts Connectors, Splice points, Ground points, etc. This section is closely related to the system circuit.
H	INDEX	Index of the system circuits.
	SYSTEM CIRCUITS	Electrical circuits of each system are shown from the power supply through ground points. Wiring connections and their positions are shown and classified by code according to the connection method. (Refer to the section, ”How to use this manual”). The ”System Outline” and ”Service Hints” useful for troubleshooting are also contained in this section.
I	GROUND POINT	Shows ground positions of all parts described in this manual.
J	POWER SOURCE (Current Flow Chart)	Describes power distribution from the power supply to various electrical loads.
K	CONNECTOR LIST	Describes the form of the connectors for the parts appeared in this book. This section is closely related to the system circuit.
L	PART NUMBER OF CONNECTORS	Indicates the part number of the connectors used in this manual.
M	OVERALL ELECTRICAL WIRING DIAGRAM	Provides circuit diagrams showing the circuit connections.

cardiagn.com

This manual provides information on the electrical circuits installed on vehicles by dividing them into a circuit for each system.

The actual wiring of each system circuit is shown from the point where the power source is received from the battery as far as each ground point. (All circuit diagrams are shown with the switches in the OFF position.)

When troubleshooting any problem, first understand the operation of the circuit where the problem was detected (see System Circuit section), the power source supplying power to that circuit (see Power Source section), and the ground points (see Ground Point section). See the System Outline to understand the circuit operation.

When the circuit operation is understood, begin troubleshooting of the problem circuit to isolate the cause. Use Relay Location and Electrical Wiring Routing sections to find each part, junction block and wiring harness connectors, wiring harness and wiring harness connectors, splice points, and ground points of each system circuit. Internal wiring for each junction block is also provided for better understanding of connection within a junction block.
Wiring related to each system is indicated in each system circuit by arrows (from__, to__). When overall connections are required, see the Overall Electrical Wiring Diagram at the end of this manual.

cardiagn.com

[A]

STOP LIGHT

∗ The system shown here is an EXAMPLE ONLY. It is different to the actual circuit shown in the SYSTEM CIRCUITS SECTION.

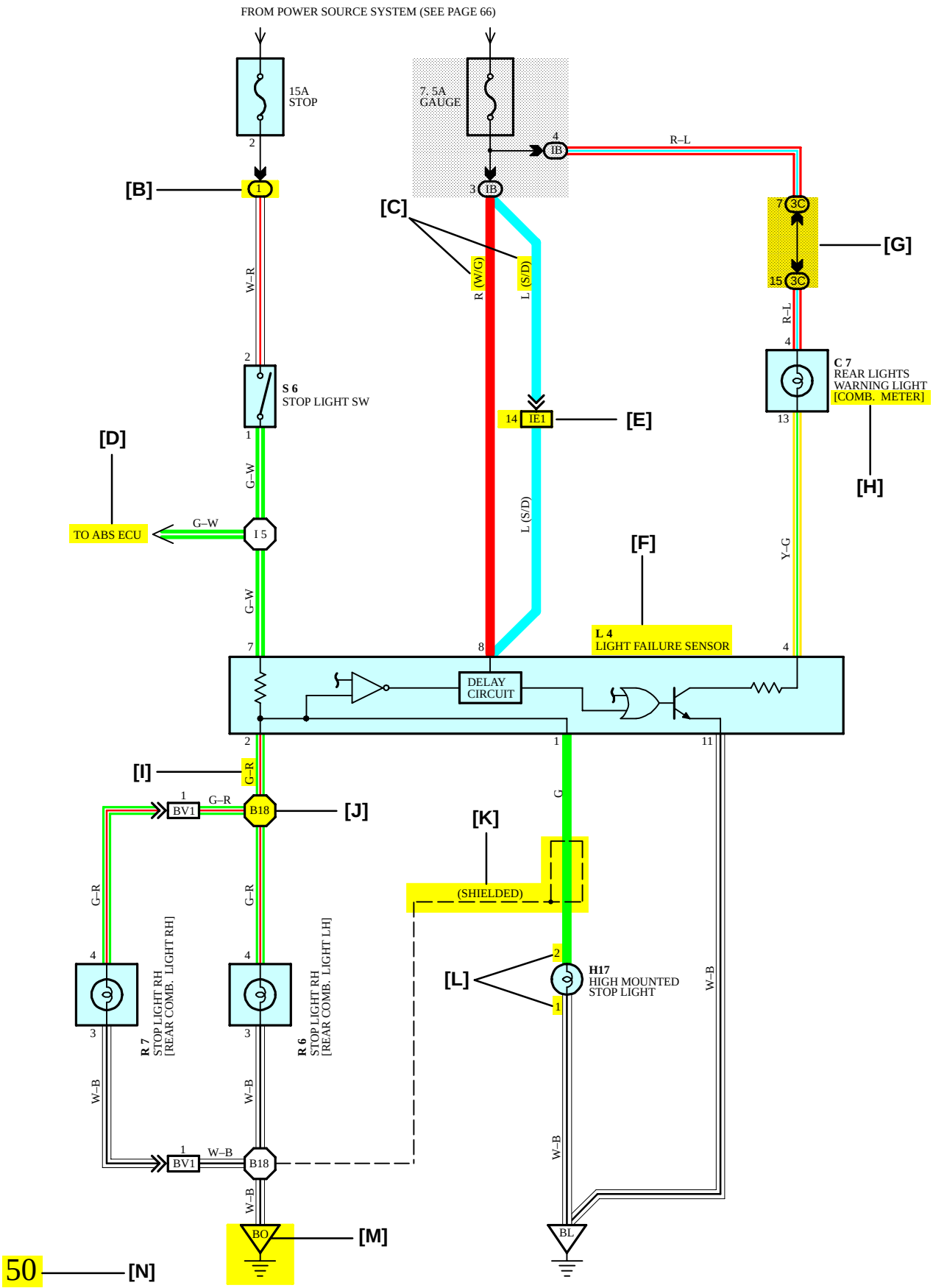

cardiagn.com

[A] : System Title

[B] : Indicates a Relay Block. No shading is used and only the Relay Block No. is shown to distinguish it from the J/B

Example: (1) Indicates Relay Block No.1

[C] : ( ) is used to indicate different wiring and connector, etc. when the vehicle model, engine type, or specification is different.

[D] : Indicates related system.

[E] : Indicates the wiring harness and wiring harness connector. The wiring harness with male terminal is shown with arrows (⩔).
Outside numerals are pin numbers.

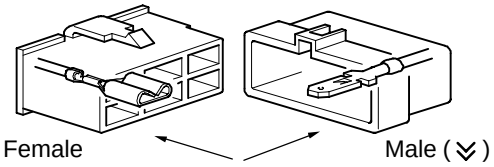

The first letter of the code for each wiring harness and wiring harness connector(s) indicates the component's location, e.g, "E" for the Engine Compartment, "I" for the Instrument Panel and Surrounding area, and "B" for the Body and Surrounding area.

When more than one code has the first and second letters in common, followed by numbers (e.g, IH1, IH2), this indicates the same type of wiring harness and wiring harness connector.

[F] : Represents a part (all parts are shown in sky blue). The code is the same as the code used in parts position.

[G] : Junction Block (The number in the circle is the J/B No. and the connector code is shown beside it). Junction Blocks are shaded to clearly separate them from other parts.

Example:

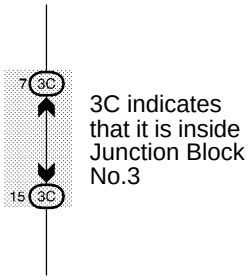

[H] : When 2 parts both use one connector in common, the parts connector name used in the wire routing section is shown in square brackets [ ].

[I] : Indicates the wiring color.

Wire colors are indicated by an alphabetical code.

B = Black	W = White	BR = Brown
L = Blue	V = Violet	SB = Sky Blue
R = Red	G = Green	LG = Light Green
P = Pink	Y = Yellow	GR = Gray
O = Orange		

The first letter indicates the basic wire color and the second letter indicates the color of the stripe.

Example: L – Y

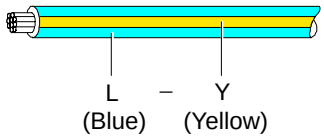

[J] : Indicates a wiring Splice Point (Codes are "E" for the Engine Room, "I" for the Instrument Panel, and "B" for the Body).

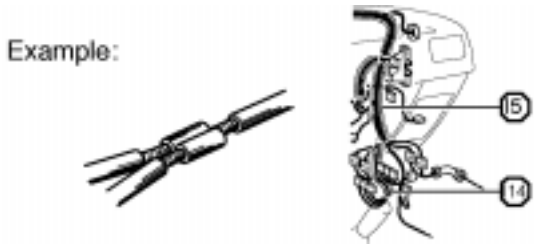

The Location of splice Point I 5 is indicated by the shaded section.

[K] : Indicates a shielded cable.

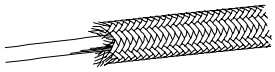

[L] : Indicates the pin number of the connector.
The numbering system is different for female and male connectors.

Example: Numbered in order from upper left to lower right / Numbered in order from upper right to lower left

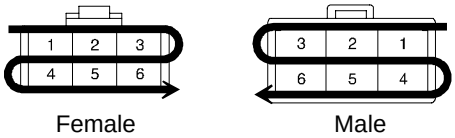

[M] : Indicates a ground point.

The first letter of the code for each ground point(s) indicates the component's location, e.g, "E" for the Engine Compartment, "I" for the Instrument Panel and Surrounding area, and "B" for the Body and Surrounding area.

[N] : Page No.

cardiagn.com

[O] SYSTEM OUTLINE

Current is applied at all times through the STOP fuse to TERMINAL 2 of the stop light SW.
When the ignition SW is turned on, current flows from the GAUGE fuse to TERMINAL 8 of the light failure sensor, and also flows through the rear lights warning light to TERMINAL 4 of the light failure sensor.

STOP LIGHT DISCONNECTION WARNING

When the ignition SW is turned on and the brake pedal is pressed (Stop light SW on), if the stop light circuit is open, the current flowing from TERMINAL 7 of the light failure sensor to TERMINALS 1, 2 changes, so the light failure sensor detects the disconnection and the warning circuit of the light failure sensor is activated.
As a result, the current flows from TERMINAL 4 of the light failure sensor to TERMINAL 11 to GROUND and turns the rear lights warning light on. By pressing the brake pedal, the current flowing to TERMINAL 8 of the light failure sensor keeps the warning circuit on and holds the warning light on until the ignition SW is turned off.

[P] SERVICE HINTS

S6 STOP LIGHT SW

2–1 : Closed with the brake pedal depressed

L4 LIGHT FAILURE SENSOR

1, 2, 7–GROUND : Approx. **12** volts with the stop light SW on
4, 8–GROUND : Approx. **12** volts with the ignition SW at **ON** position
11–GROUND : Always continuity

[Q] : PARTS LOCATION

Code	See Page	Code	See Page	Code	See Page
C7	34	L4	36	R7	37
H17	36	R6	37	S6	35

[R] : RELAY BLOCKS

Code	See Page	Relay Blocks (Relay Block Location)
1	18	R/B No.1 (Instrument Panel Left)

[S] : JUNCTION BLOCK AND WIRE HARNESS CONNECTOR

Code	See Page	Junction Block and Wire Harness (Connector Location)
IB	20	Instrument Panel Wire and Instrument Panel J/B (Lower Finish Panel)
3C	22	Instrument Panel Wire and J/B No.3 (Instrument Panel Left Side)

[T] : CONNECTOR JOINING WIRE HARNESS AND WIRE HARNESS

Code	See Page	Joining Wire Harness and Wire Harness (Connector Location)
IE1	42	Floor Wire and Instrument Panel Wire (Left Kick Panel)
BV1	50	Luggage Room Wire and Floor Wire (Luggage Compartment Left)

[U] : GROUND POINTS

Code	See Page	Ground Points Location
BL	50	Under the Left Quarter Pillar
BO	50	Back Panel Center

[V] : SPLICE POINTS

Code	See Page	Wire Harness with Splice Points	Code	See Page	Wire Harness with Splice Points
I5	44	Cowl Wire	B18	50	Luggage Room Wire

cardiagn.com

[O] : Explains the system outline.

[P] : Indicates values or explains the function for reference during troubleshooting.

[Q] : Indicates the reference page showing the position on the vehicle of the parts in the system circuit.

Example : Part ”L4” (Light Failure Sensor) is on page 36 of the manual.
∗ The letter in the code is from the first letter of the part, and the number indicates its order in parts starting with that letter.

Example : L 4
- 4 — Parts is 4th in order
- L — Light Failure Sensor

[R] : Indicates the reference page showing the position on the vehicle of Relay Block Connectors in the system circuit.

Example : Connector ”1” is described on page 18 of this manual and is installed on the left side of the instrument panel.

[S] : Indicates the reference page showing the position on the vehicle of J/B and Wire Harness in the system circuit.

Example : Connector ”3C” connects the Instrument Panel Wire and J/B No.3. It is described on page 22 of this manual, and is installed on the instrument panel left side.

[T] : Indicates the reference page describing the wiring harness and wiring harness connector (the female wiring harness is shown first, followed by the male wiring harness).

Example : Connector ”IE1” connects the floor wire (female) and Instrument panel wire (male). It is described on page 42 of this manual, and is installed on the left side kick panel.

[U] : Indicates the reference page showing the position of the ground points on the vehicle.

Example : Ground point ”BO” is described on page 50 of this manual and is installed on the back panel center.

[V] : Indicates the reference page showing the position of the splice points on the vehicle.

Example : Splice point ”I5” is on the Cowl Wire Harness and is described on page 44 of this manual.

cardiagn.com

B HOW TO USE THIS MANUAL

The ground points circuit diagram shows the connections from all major parts to the respective ground points. When troubleshooting a faulty ground point, checking the system circuits which use a common ground may help you identify the problem ground quickly. The relationship between ground points (EA, IB and IC shown below) can also be checked this way.

I GROUND POINT

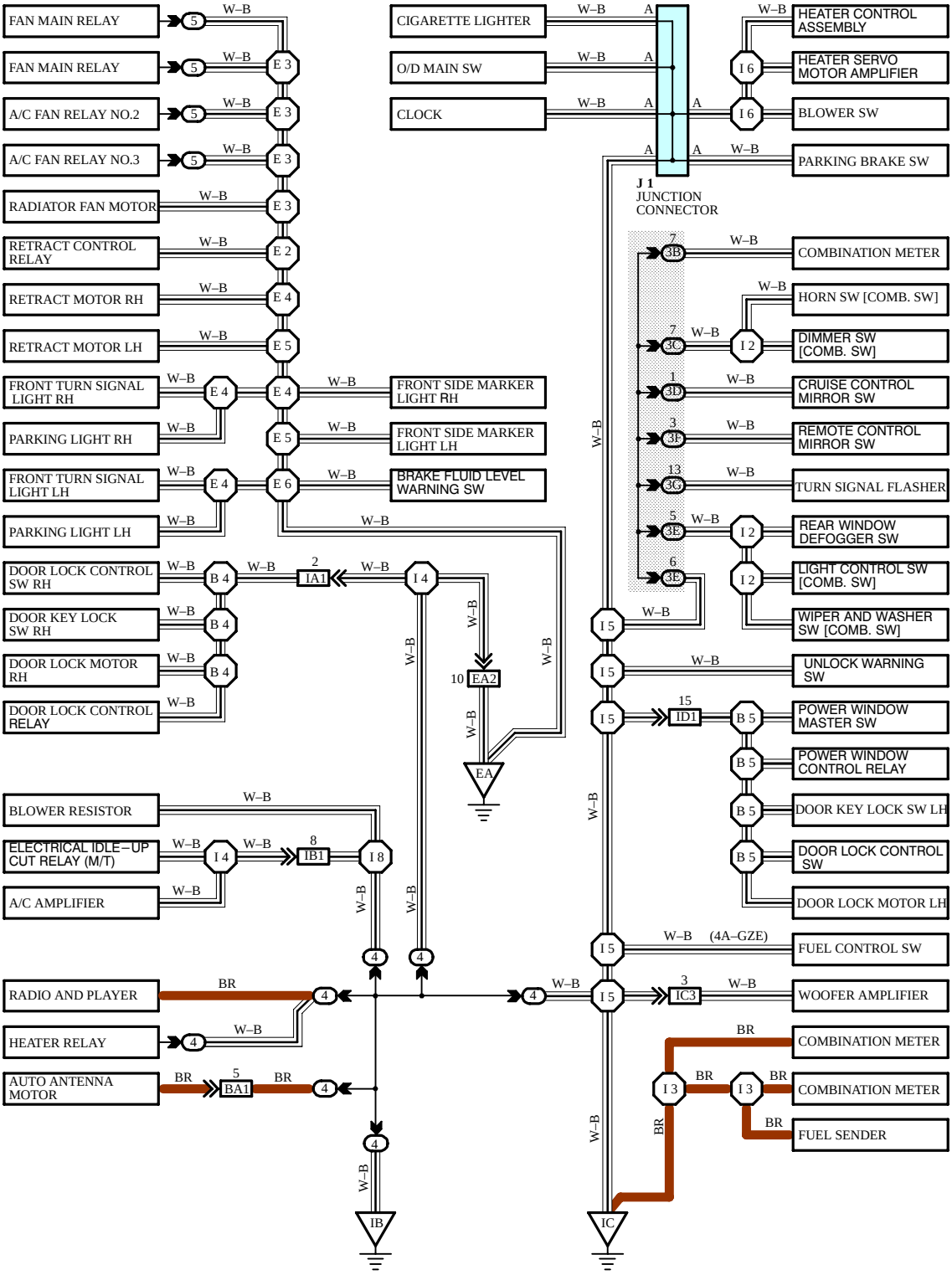

∗ The system shown here is an EXAMPLE ONLY. It is different to the actual circuit shown in the SYSTEM CIRCUITS SECTION.

cardiagn.com

The ”Current Flow Chart” section, describes which parts each power source (fuses, fusible links, and circuit breakers) transmits current to. In the Power Source circuit diagram, the conditions when battery power is supplied to each system are explained. Since all System Circuit diagrams start from the power source, the power source system must be fully understood.

J POWER SOURCE (Current Flow Chart)

The chart below shows the route by which current flows from the battery to each electrical source (Fusible Link, Circuit Breaker, Fuse, etc.) and other parts.

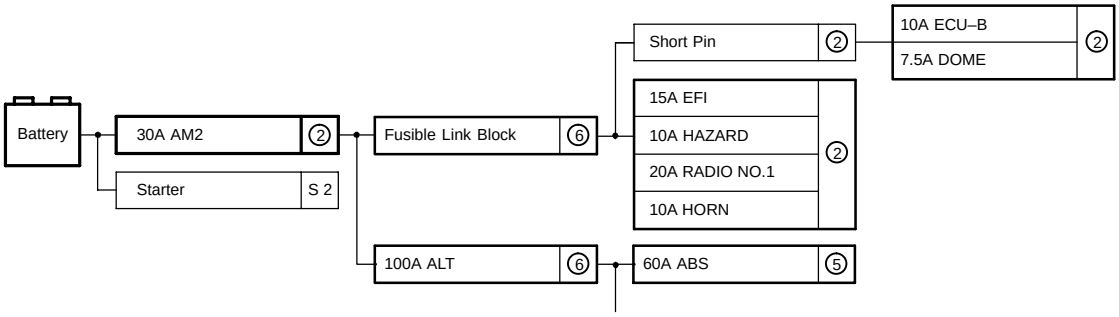

Engine Room R/B (See Page 20)

Fuse		System	Page
20A	STOP	ABS ABS and Traction Control Cruise Control Electronically Controlled Transmission and A/T Indicator Multiplex Communication System	194 187 180 166 210
10A	DOME	Cigarette Lighter and Clock Combination Meter Headlight Interior Light Key Reminder and Seat Belt Warning Light Auto Turn Off Theft Deterrent and Door L	214 230 112 122

POWER SOURCE

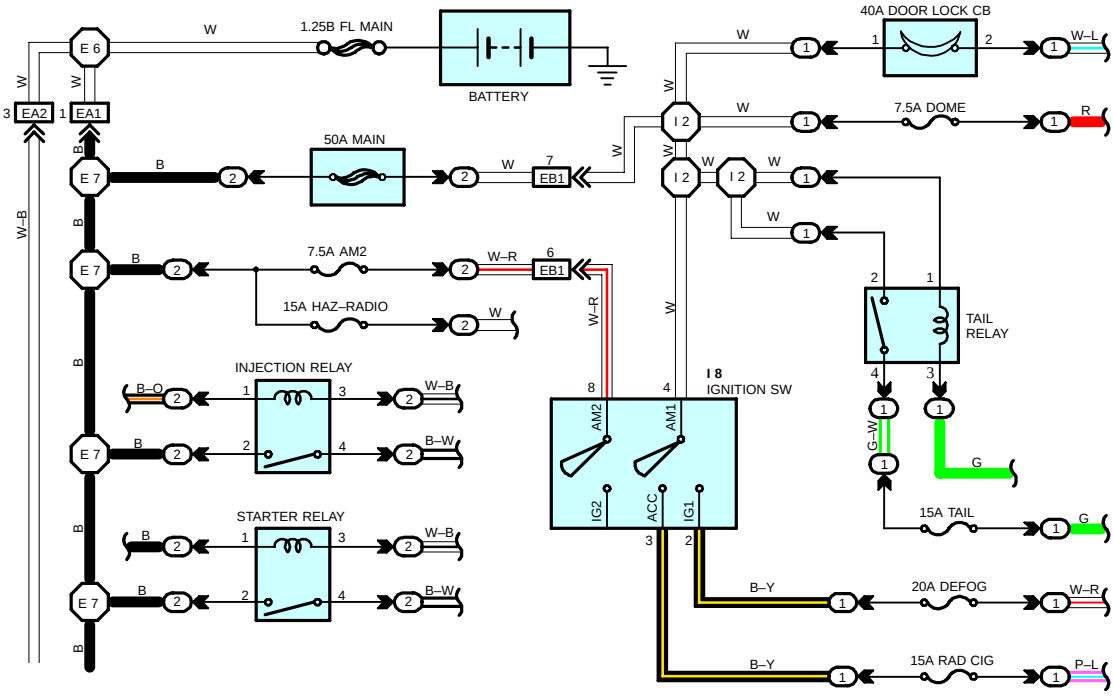

∗ The system shown here is an EXAMPLE ONLY. It is different to the actual circuit shown in the SYSTEM CIRCUITS SECTION.

cardiagn.com

K CONNECTOR LIST

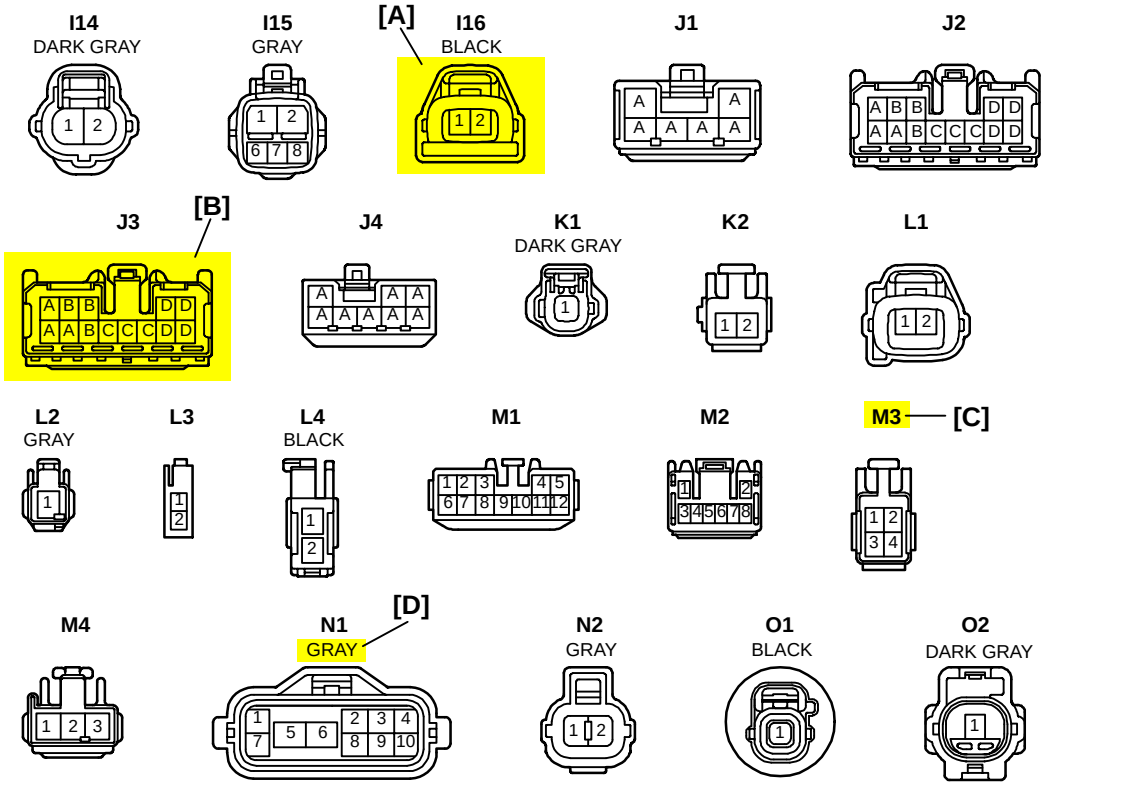

[A] : Indicates connector to be connected to a part. (The numeral indicates the pin No.)

[B] : Junction Connector
Indicates a connector which is connected to a short terminal.

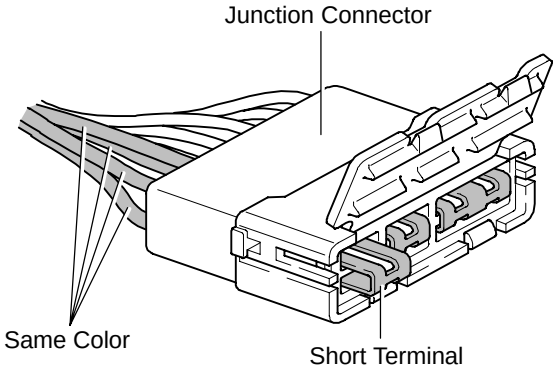

Junction connector in this manual include a short terminal which is connected to a number of wire harnesses. Always perform inspection with the short terminal installed. (When installing the wire harnesses, the harnesses can be connected to any position within the short terminal grouping. Accordingly, in other vehicles, the same position in the short terminal may be connected to a wire harness from a different part.)
Wire harness sharing the same short terminal grouping have the same color.

[C] : Parts Code
The first letter of the code is taken from the first letter of part, and the numbers indicates its order in parts which start with the same letter.

[D] : Connector Color
Connectors not indicated are milky white in color.

cardiagn.com

L PART NUMBER OF CONNECTORS

Code	Part Name	Part Number
A 1	A/C Ambient Temp. Sensor	90980–11070
A 2	A/C Condenser Fan Motor	90980–11237
A 3	A/C Condenser Fan Relay	90980–10940
A 4	A/C Triple Pressure SW (A/C Dual and Single Pressure SW)	90980–10943
[A]	A/T Oil Temp. Sensor [B]	909 [C] 413
A 6	ABS Actuator	90980–11151
A 7	ABS Actuator	90980–11009
A 8	ABS Speed Sensor Front LH	90980–10941
A 9	ABS Speed Sensor Front RH	90980–11002
A10	Airbag Sensor Front LH	90980–11856
A11	Airbag Sensor Front RH	
A12	[illegible]	90980–11194
	[illegible]	90980–11[illegible]

Code	Part Name	Part Number
D 4	Diode (Door Courtesy Light)	90980–11608
D 5	Diode (Key Off Operation)	90980–10962
D 6	Diode (Luggage Compartment Light)	90980–11608
D 7	Door Lock Control Relay	90980–10848
D 8	Door Courtesy Light LH	90980–11148
D 9	Door Courtesy Light RH	
D10	Door Courtesy SW LH	90980–11097
D11	Door Courtesy SW RH	
D12	Door Courtesy SW Front LH	90980–11156
D13	Door Courtesy SW Front RH	
D14	Door Courtesy SW Rear LH	
D15	Door Courtesy SW Rear RH	
D16	[illegible] Unlock SW LH	90980–11170
	[illegible]	

[A] : Part Code

[B] : Part Name

[C] : Part Number
Toyota Part Number are indicated.

Not all of the above part numbers of the connector are established for the supply. In case of ordering a connector or terminal with wire, please confirm in advance if there is supply for it using “Parts Catalog News” (published by Parts Engineering Administration Dept.).

cardiagn.com

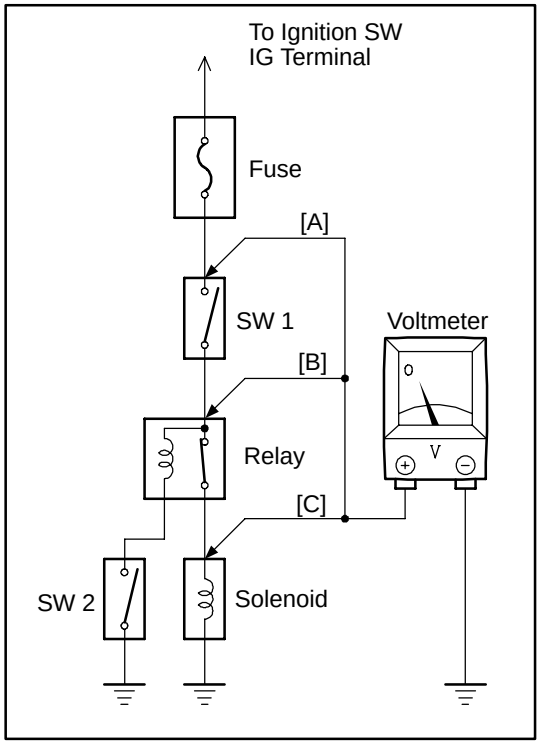

VOLTAGE CHECK

(a) Establish conditions in which voltage is present at the check point.

Example:
[A] – Ignition SW on
[B] – Ignition SW and SW 1 on
[C] – Ignition SW, SW 1 and Relay on (SW 2 off)

(b) Using a voltmeter, connect the negative lead to a good ground point or negative battery terminal, and the positive lead to the connector or component terminal.
This check can be done with a test light instead of a voltmeter.

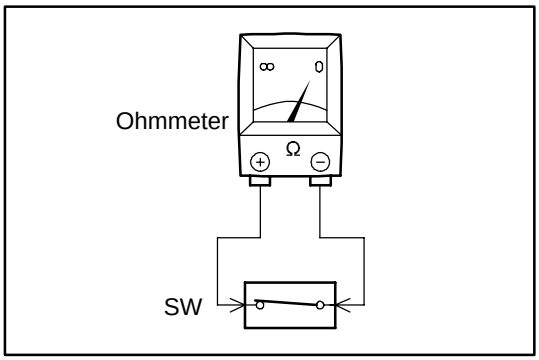

CONTINUITY AND RESISTANCE CHECK

(a) Disconnect the battery terminal or wire so there is no voltage between the check points.

(b) Contact the two leads of an ohmmeter to each of the check points.

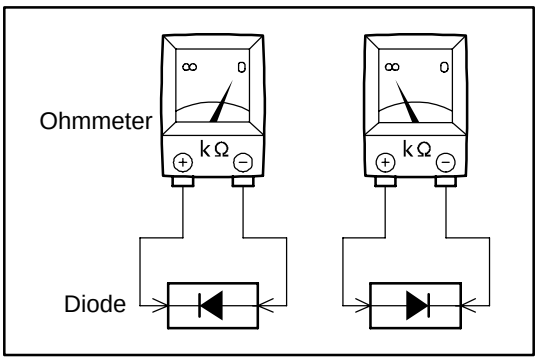

If the circuit has diodes, reverse the two leads and check again.
When contacting the negative lead to the diode positive side and the positive lead to the negative side, there should be continuity.
When contacting the two leads in reverse, there should be no continuity.

(c) Use a volt/ohmmeter with high impedance (10 kΩ/V minimum) for troubleshooting of the electrical circuit.

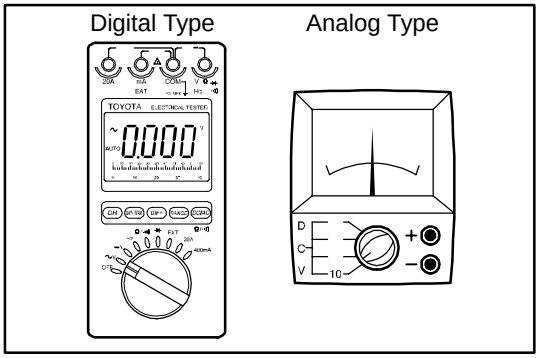

cardiagn.com

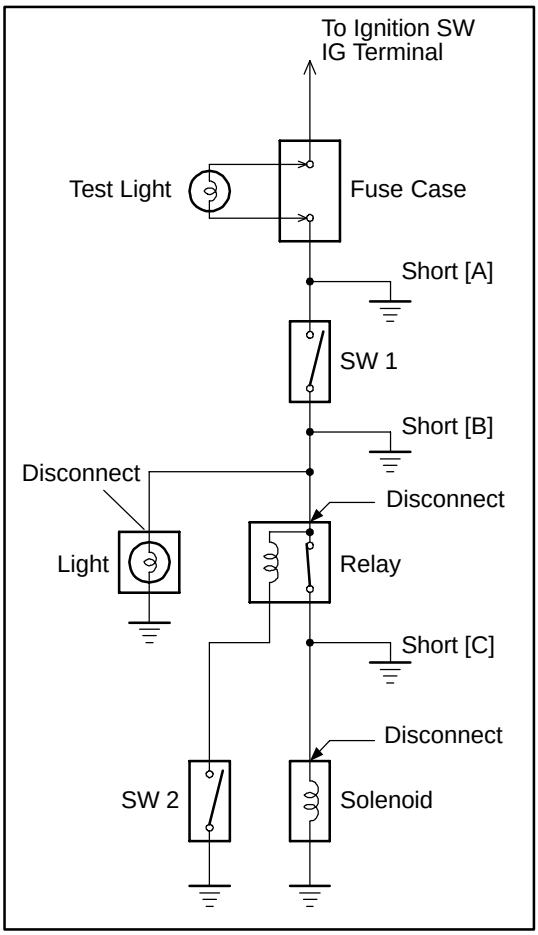

FINDING A SHORT CIRCUIT

(a) Remove the blown fuse and disconnect all loads of the fuse.

(b) Connect a test light in place of the fuse.

(c) Establish conditions in which the test light comes on.

Example:
[A] – Ignition SW on
[B] – Ignition SW and SW 1 on
[C] – Ignition SW, SW 1 and Relay on (Connect the Relay) and SW 2 off (or Disconnect SW 2)

(d) Disconnect and reconnect the connectors while watching the test light.
The short lies between the connector where the test light stays lit and the connector where the light goes out.

(e) Find the exact location of the short by lightly shaking the problem wire along the body.

CAUTION:

(a) Do not open the cover or the case of the ECU unless absolutely necessary. (If the IC terminals are touched, the IC may be destroyed by static electricity.)

(b) When replacing the internal mechanism (ECU part) of the digital meter, be careful that no part of your body or clothing comes in contact with the terminals of leads from the IC, etc. of the replacement part (spare part).

DISCONNECTION OF MALE AND FEMALE CONNECTORS

To pull apart the connectors, pull on the connector itself, not the wire harness.

HINT : Check to see what kind of connector you are disconnecting before pulling apart.

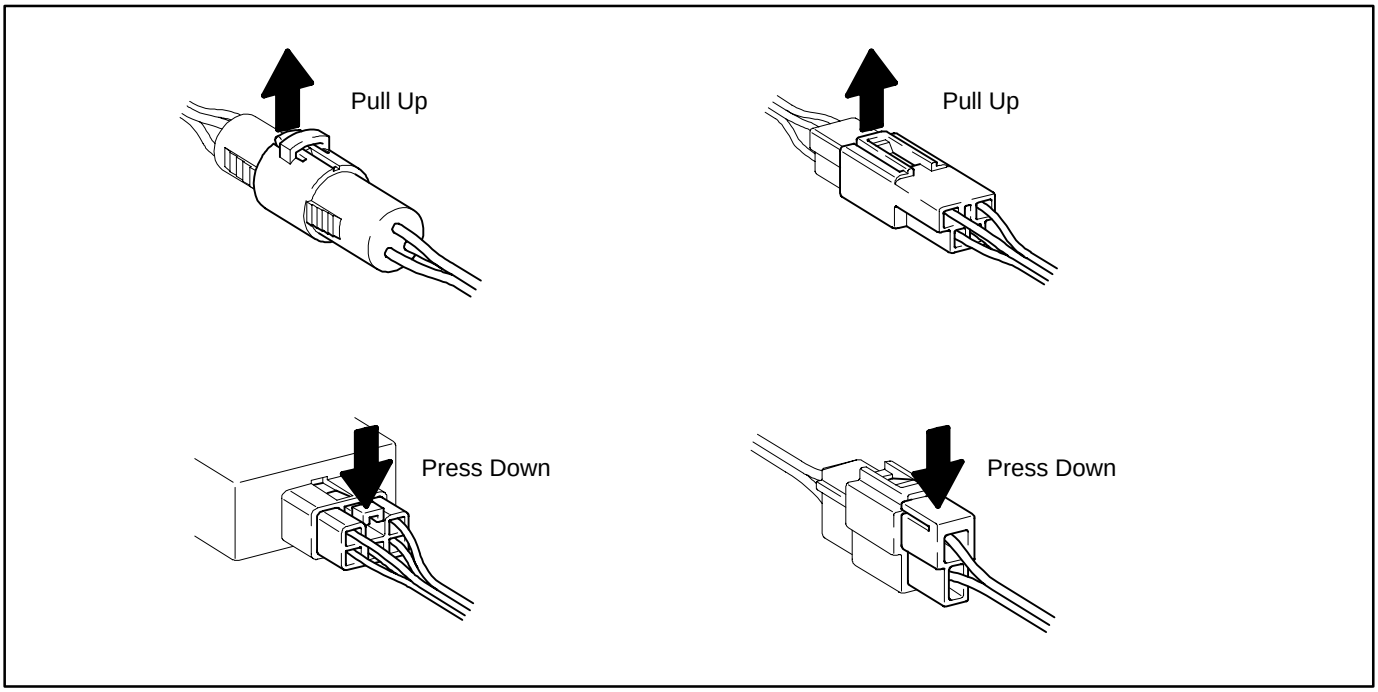

cardiagn.com

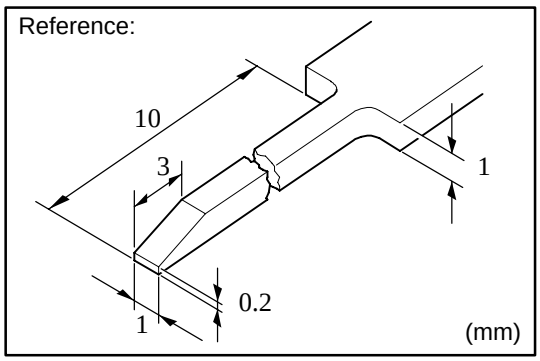

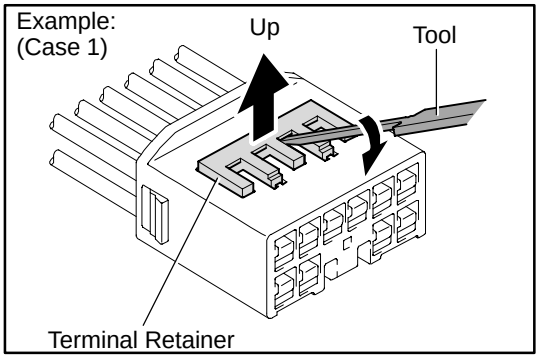

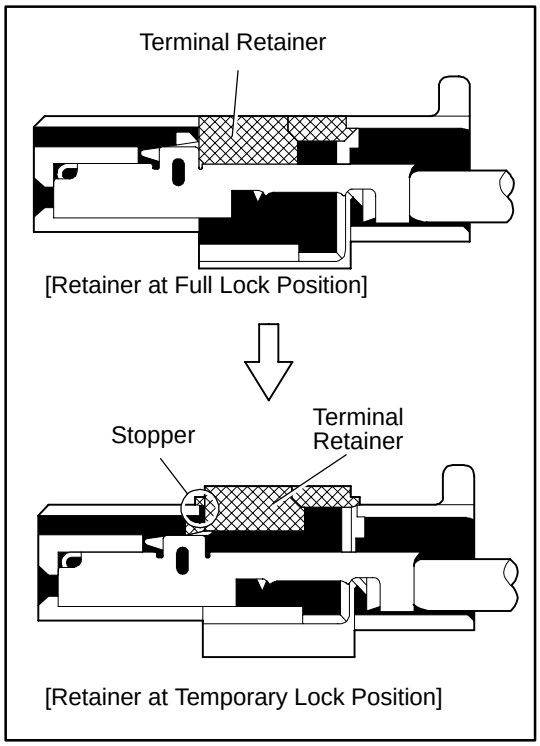

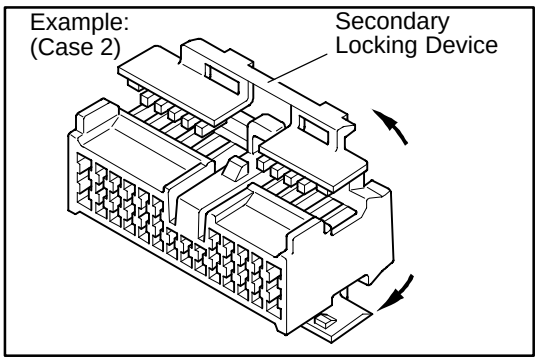

HOW TO REPLACE TERMINAL (with terminal retainer or secondary locking device)

1. PREPARE THE SPECIAL TOOL

   HINT : To remove the terminal from the connector, please construct and use the special tool or like object shown on the left.

2. DISCONNECT CONNECTOR

3. DISENGAGE THE SECONDARY LOCKING DEVICE OR TERMINAL RETAINER.

   (a) Locking device must be disengaged before the terminal locking clip can be released and the terminal removed from the connector.

   (b) Use a special tool or the terminal pick to unlock the secondary locking device or terminal retainer.

   NOTICE:
   Do not remove the terminal retainer from connector body.

   [A] For Non–Waterproof Type Connector

   HINT : The needle insertion position varies according to the connector's shape (number of terminals etc.), so check the position before inserting it.

   "Case 1"

   Raise the terminal retainer up to the temporary lock position.

   "Case 2"

   Open the secondary locking device.

cardiagn.com

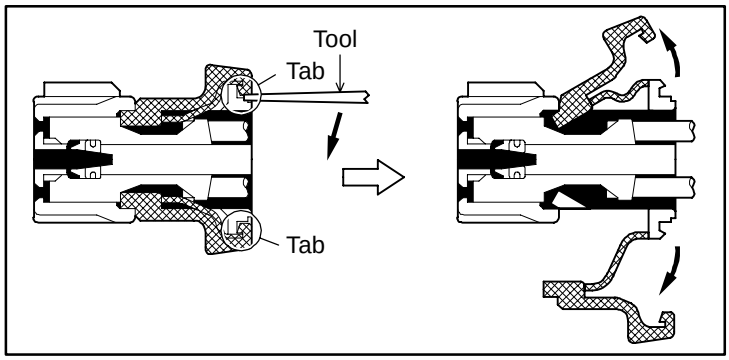

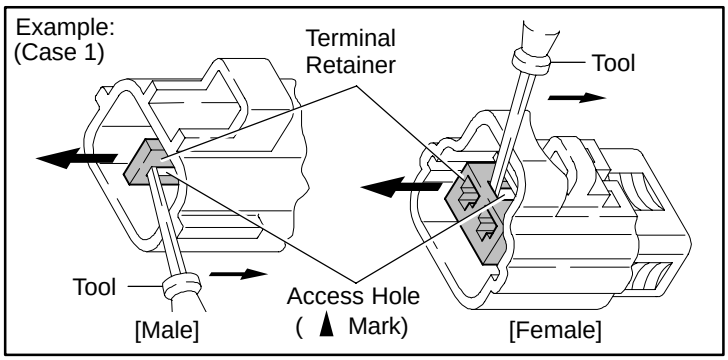

[B] For Waterproof Type Connector

HINT : Terminal retainer color is different according to connector body.

Example:

Terminal Retainer	: Connector Body
Black or White	: Gray
Black or White	: Dark Gray
Gray or White	: Black

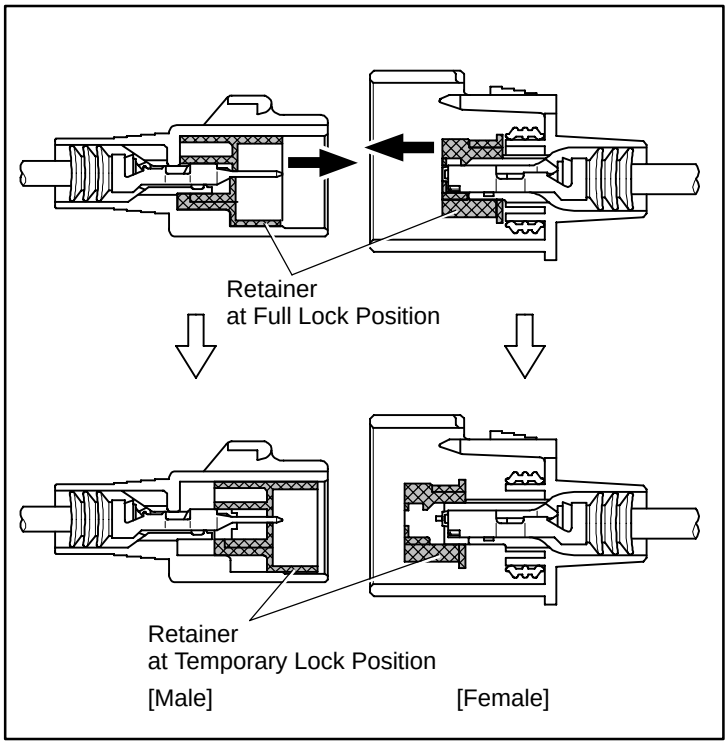

”Case 1”

Type where terminal retainer is pulled up to the temporary lock position (Pull Type).

Insert the special tool into the terminal retainer access hole (▲Mark) and pull the terminal retainer up to the temporary lock position.

HINT : The needle insertion position varies according to the connector’s shape (Number of terminals etc.), so check the position before inserting it.

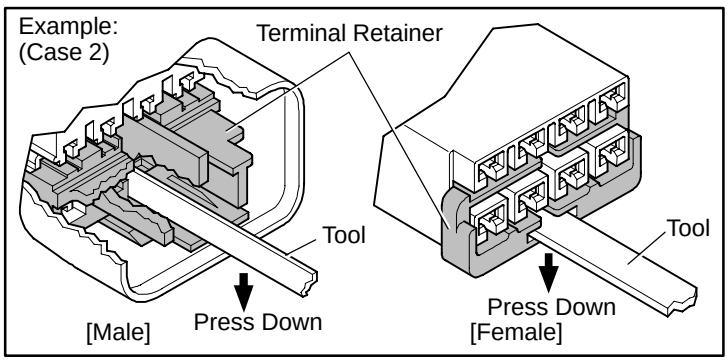

”Case 2”

Type which cannot be pulled as far as Power Lock insert the tool straight into the access hole of terminal retainer as shown.

cardiagn.com

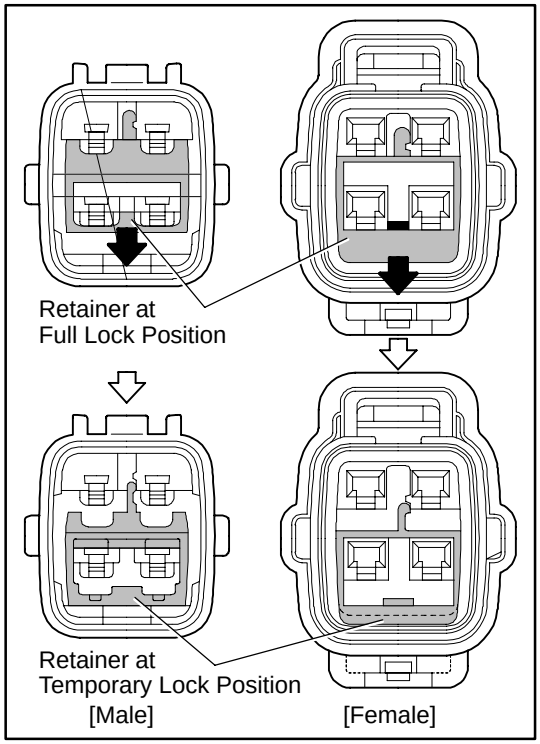

Push the terminal retainer down to the temporary lock position.

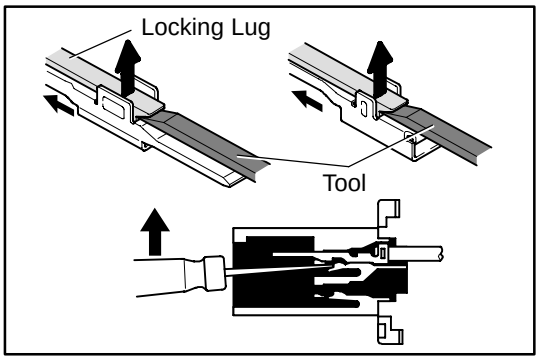

(c) Release the locking lug from terminal and pull the terminal out from rear.

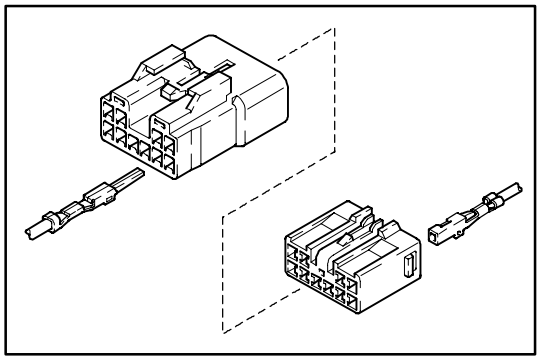

4. INSTALL TERMINAL TO CONNECTOR

(a) Insert the terminal.

HINT:
1. Make sure the terminal is positioned correctly.
2. Insert the terminal until the locking lug locks firmly.
3. Insert the terminal with terminal retainer in the temporary lock position.

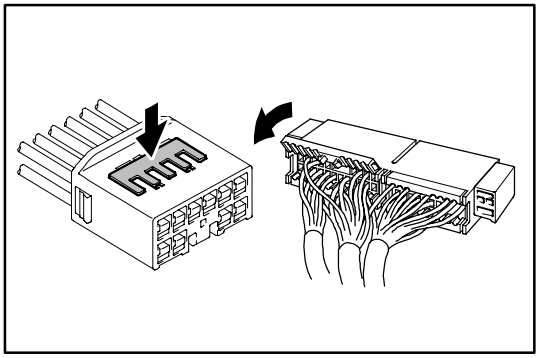

(b) Push the secondary locking device or terminal retainer in to the full lock position.

5. CONNECT CONNECTOR

cardiagn.com

ABBREVIATIONS

The following abbreviations are used in this manual.

ABS	=	Anti–Lock Brake System
A/C	=	Air Conditioning
COMB.	=	Combination
DC	=	Direct Current
ECU	=	Electronic Control Unit
EMPS	=	Electric Motor Power Steering
ESA	=	Electronic Spark Advance
EVAP	=	Evaporative Emission
HV	=	Hybrid Vehicle
J/B	=	Junction Block
LH	=	Left–Hand
PTC	=	Positive Temperature Coefficient
R/B	=	Relay Block
RH	=	Right–Hand
SFI	=	Sequential Multiport Fuel Injection
SRS	=	Supplemental Restraint System
SW	=	Switch
TEMP.	=	Temperature
VSV	=	Vacuum Switching Valve
w/	=	With
w/o	=	Without

cardiagn.com

∗ The titles given inside the components are the names of the terminals (terminal codes) and are not treated as being abbreviations.

E GLOSSARY OF TERMS AND SYMBOLS

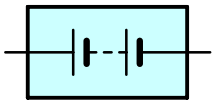

BATTERY
Stores chemical energy and converts it into electrical energy. Provides DC current for the auto's various electrical circuits.

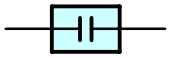

CAPACITOR (Condenser)
A small holding unit for temporary storage of electrical voltage.

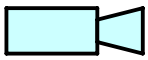

CIGARETTE LIGHTER
An electric resistance heating element.

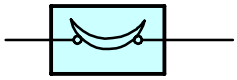

CIRCUIT BREAKER
Basically a reusable fuse, a circuit breaker will heat and open if too much current flows through it. Some units automatically reset when cool, others must be manually reset.

DIODE
A semiconductor which allows current flow in only one direction.

DIODE, ZENER
A diode which allows current flow in one direction but blocks reverse flow only up to a specific voltage. Above that potential, it passes the excess voltage. This acts as a simple voltage regulator.

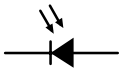

PHOTODIODE
The photodiode is a semiconductor which controls the current flow according to the amount of light.

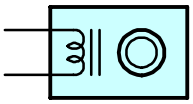

DISTRIBUTOR, IIA
Channels high–voltage current from the ignition coil to the individual spark plugs.

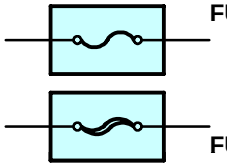

(for Medium Current Fuse)

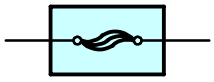

(for High Current Fuse or Fusible Link)

FUSE
A thin metal strip which burns through when too much current flows through it, thereby stopping current flow and protecting a circuit from damage.

FUSIBLE LINK
A heavy–gauge wire placed in high amperage circuits which burns through on overloads, thereby protecting the circuit. The numbers indicate the crosssection surface area of the wires.

GROUND
The point at which wiring attaches to the Body, thereby providing a return path for an electrical circuit; without a ground, current cannot flow.

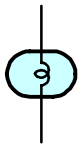

1. SINGLE FILAMENT

2. DOUBLE FILAMENT

HEADLIGHTS
Current flow causes a headlight filament to heat up and emit light. A headlight may have either a single (1) filament or a double (2) filament

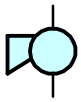

HORN
An electric device which sounds a loud audible signal.

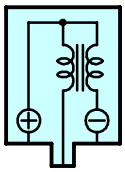

IGNITION COIL
Converts low–voltage DC current into high–voltage ignition current for firing the spark plugs.

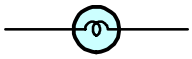

LIGHT
Current flow through a filament causes the filament to heat up and emit light.

LED (LIGHT EMITTING DIODE)
Upon current flow, these diodes emit light without producing the heat of a comparable light.

METER, ANALOG
Current flow activates a magnetic coil which causes a needle to move, thereby providing a relative display against a background calibration.

METER, DIGITAL
Current flow activates one or many LED's, LCD's, or fluorescent displays, which provide a relative or digital display.

MOTOR
A power unit which converts electrical energy into mechanical energy, especially rotary motion.

cardiagn.com

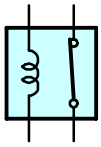

RELAY

1. NORMALLY CLOSED

Basically, an electrically operated switch which may be normally closed (1) or open (2).
Current flow through a small coil creates a magnetic field which either opens or closes an attached switch.

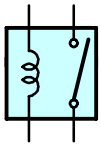

2. NORMALLY OPEN

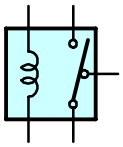

RELAY, DOUBLE THROW

A relay which passes current through one set of contacts or the other.

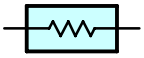

RESISTOR

An electrical component with a fixed resistance, placed in a circuit to reduce voltage to a specific value.

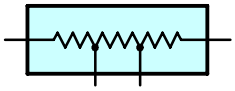

RESISTOR, TAPPED

A resistor which supplies two or more different non adjustable resistance values.

RESISTOR, VARIABLE or RHEOSTAT

A controllable resistor with a variable rate of resistance.
Also called a potentiometer or rheostat.

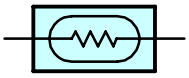

SENSOR (Thermistor)

A resistor which varies its resistance with temperature.

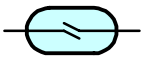

(Reed Switch Type)

SENSOR, SPEED

Uses magnetic impulses to open and close a switch to create a signal for activation of other components.

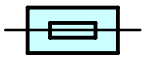

SHORT PIN

Used to provide an unbroken connection within a junction block.

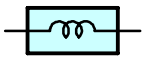

SOLENOID

An electromagnetic coil which forms a magnetic field when current flows, to move a plunger, etc.

SPEAKER

An electromechanical device which creates sound waves from current flow.

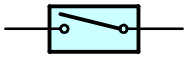

SWITCH, MANUAL

1. NORMALLY OPEN

Opens and closes circuits, thereby stopping (1) or allowing (2) current flow.

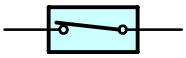

2. NORMALLY CLOSED

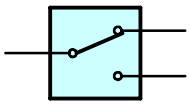

SWITCH, DOUBLE THROW

A switch which continuously passes current through one set of contacts or the other.

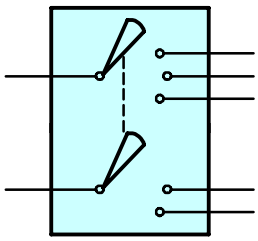

SWITCH, IGNITION

A key operated switch with several positions which allows various circuits, particularly the primary ignition circuit, to become operational.

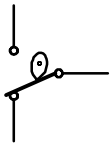

SWITCH, WIPER PARK

Automatically returns wipers to the stop position when the wiper switch is turned off.

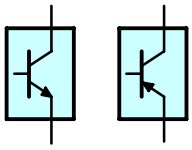

TRANSISTOR

A solidstate device typically used as an electronic relay; stops or passes current depending on the voltage applied at ”base”.

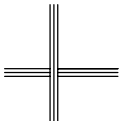

WIRES

(1) NOT CONNECTED

Wires are always drawn as straight lines on wiring diagrams.
Crossed wires (1) without a black dot at the junction are not joined;
crossed wires (2) with a black dot or octagonal ( ) mark at the junction are spliced (joined) connections.

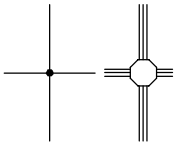

(2) SPLICED

cardiagn.com

F RELAY LOCATIONS

[Engine Compartment]

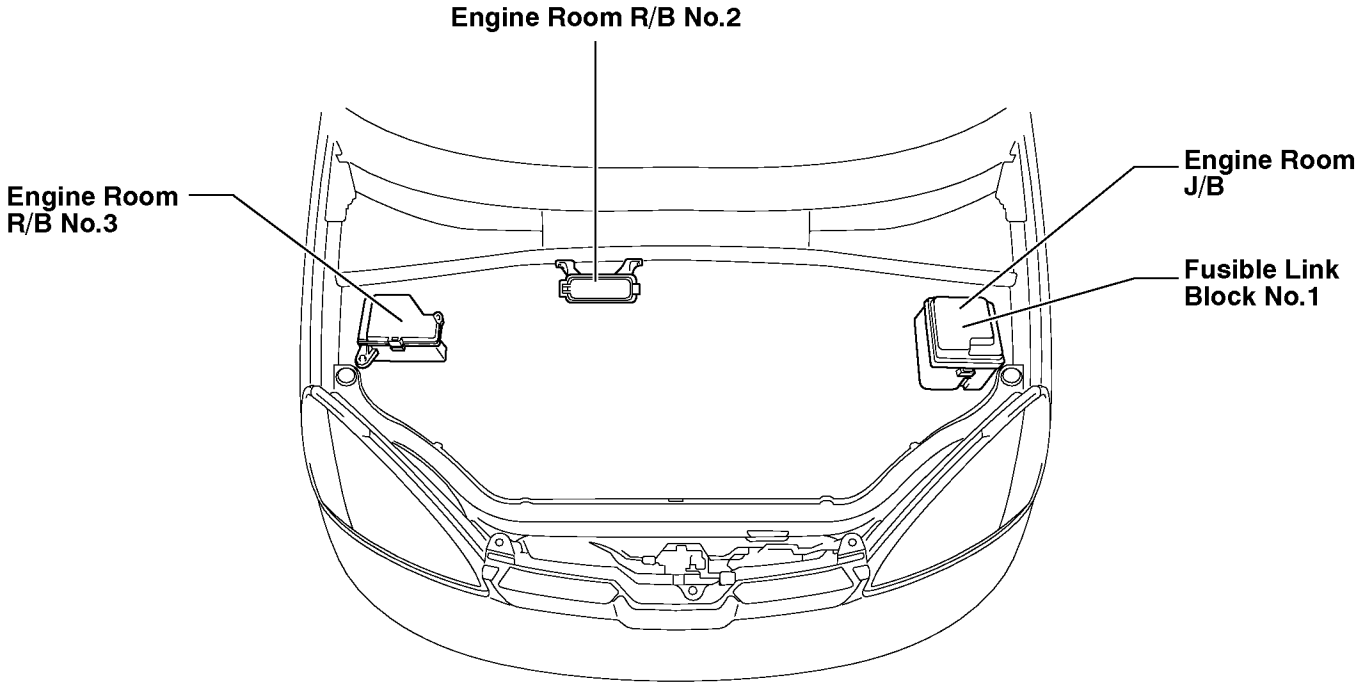

[Instrument Panel]

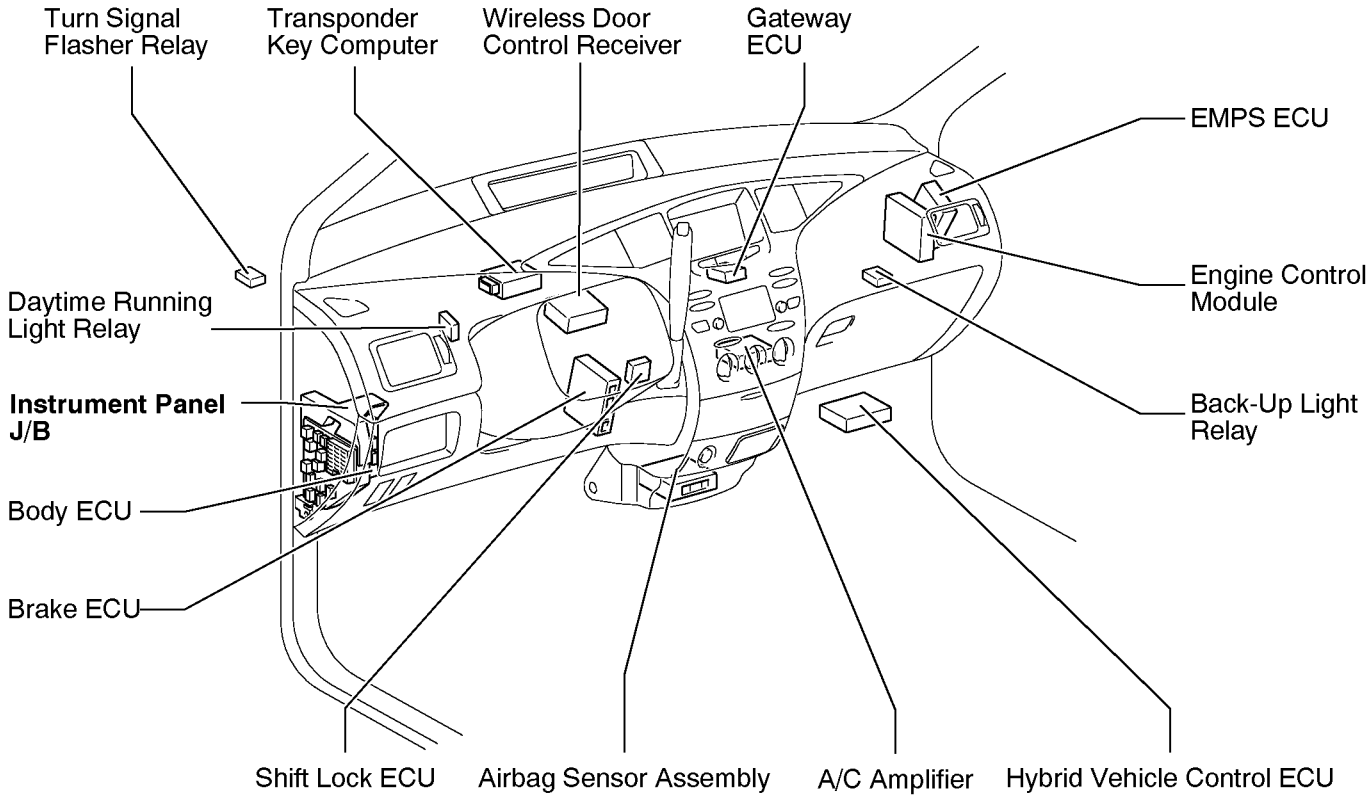

cardiagn.com

[Body]

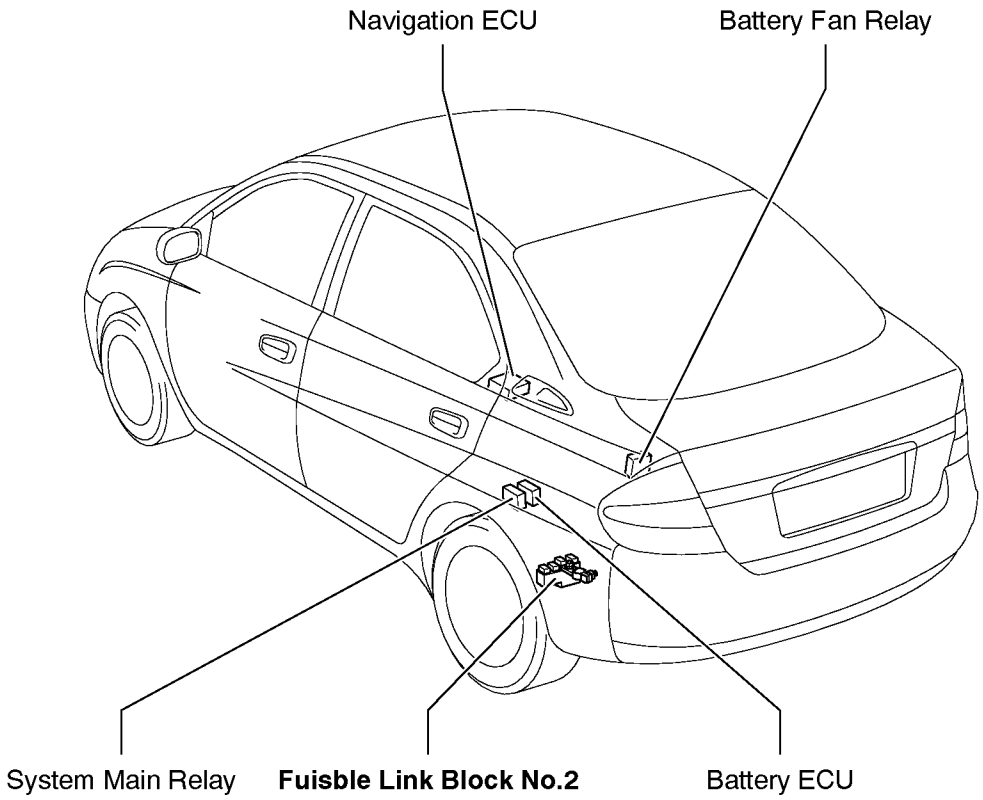

cardiagn.com

F RELAY LOCATIONS

Fusible Link Block No.1	Engine Compartment Left (See Page 20)

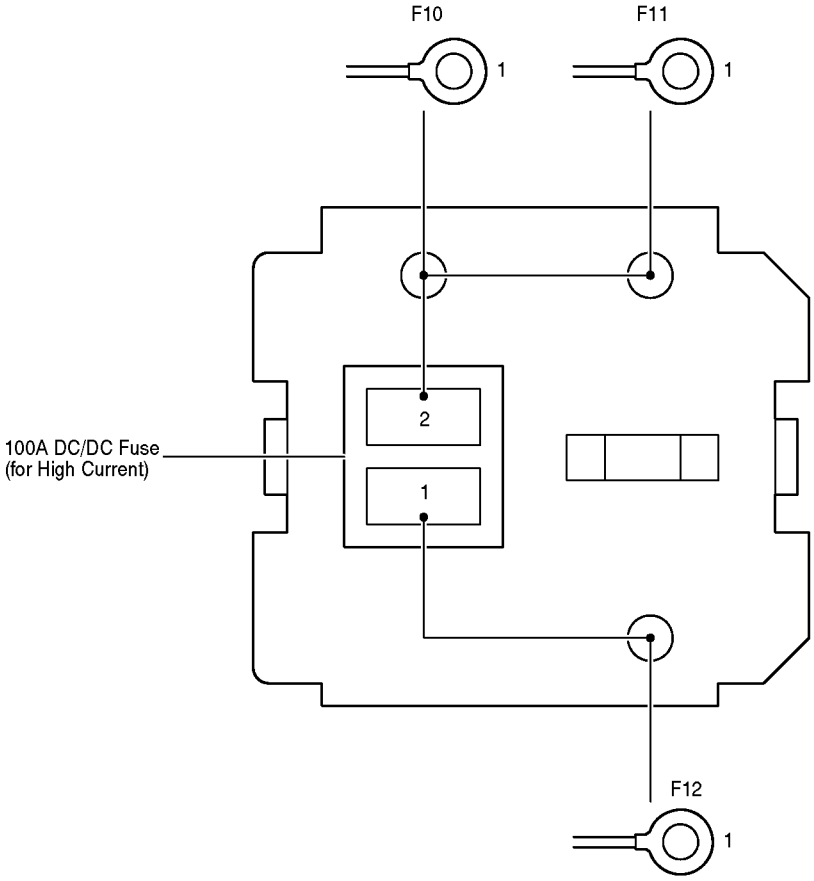

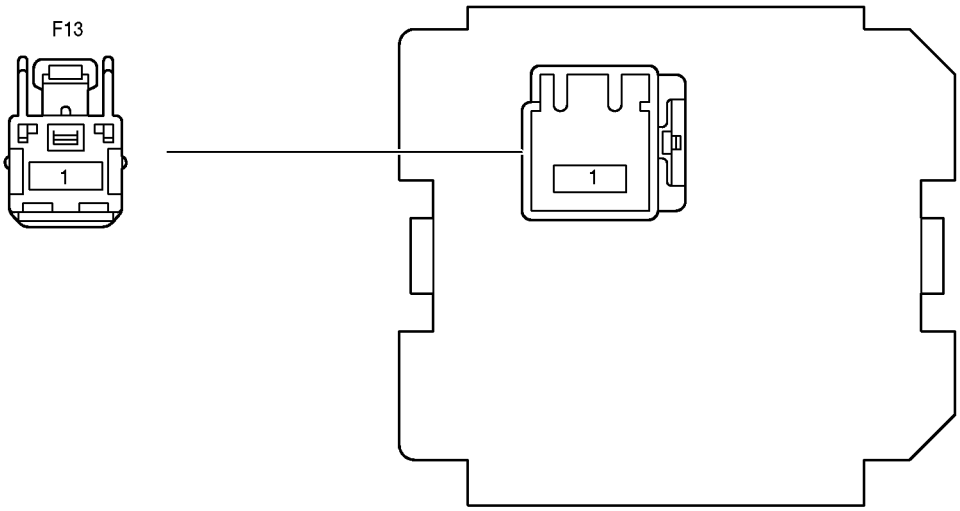

cardiagn.com

Fusible Link Block No.2	Luggage Room Left (See Page 21)

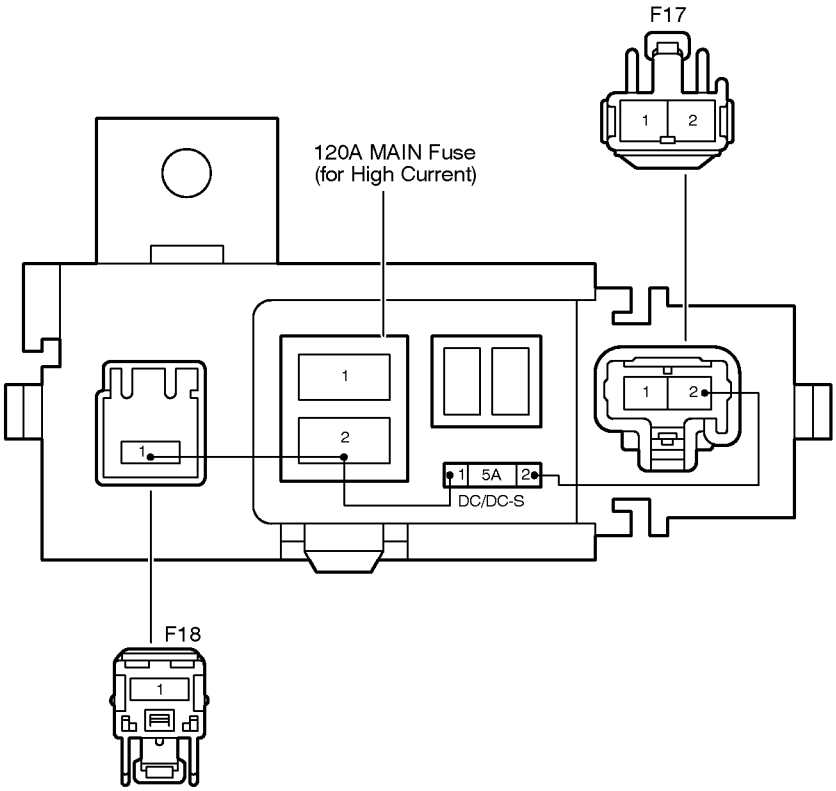

② : Engine Room R/B No.2	Right Side of Reserve Tank (See Page 20)

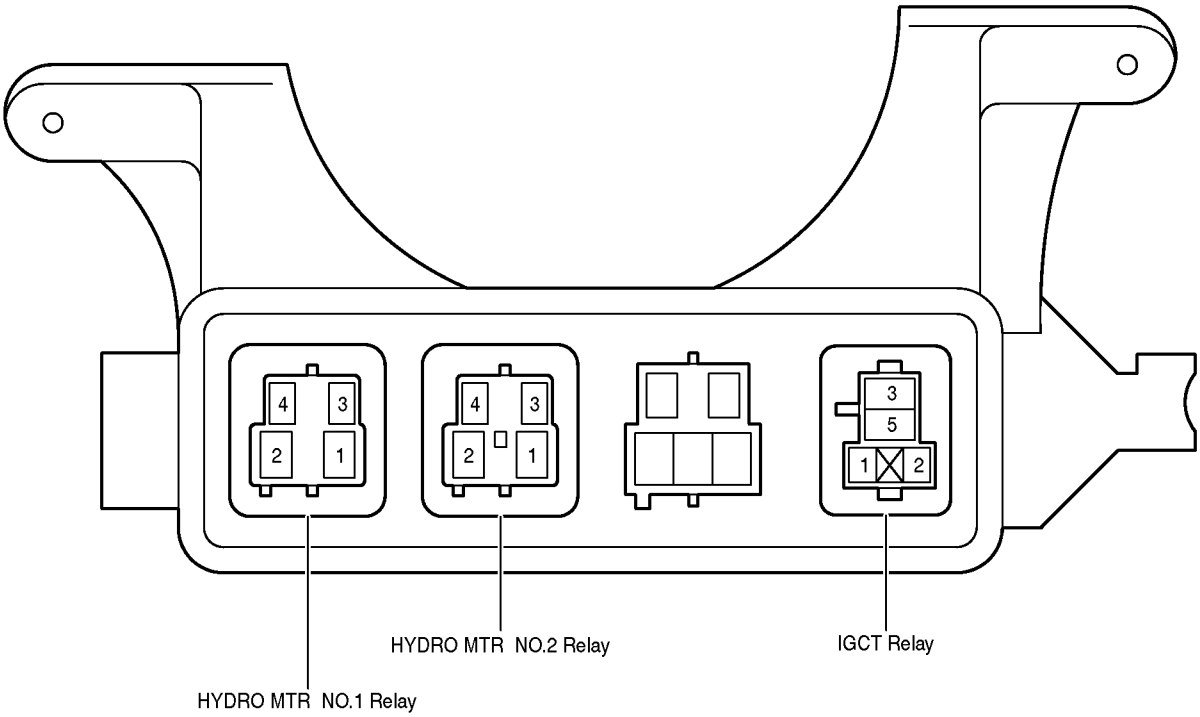

cardiagn.com

F RELAY LOCATIONS

③ : Engine Room R/B No.3	Engine Compartment Right (See Page 20)

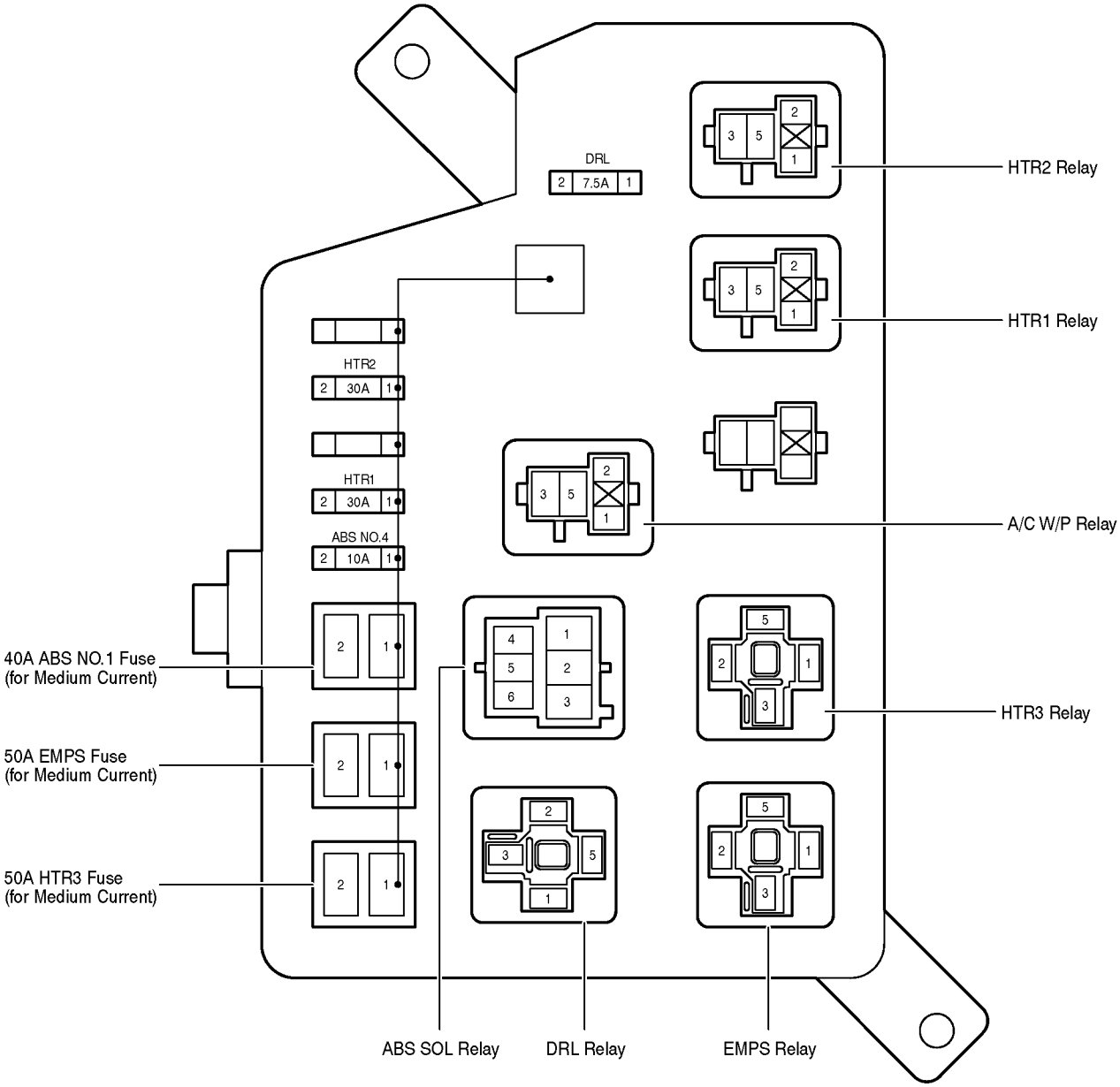

cardiagn.com

cardiagn.com

F RELAY LOCATIONS

: Engine Room J/B	Engine Compartment Left (See Page 20)

*1 : HEAD LO (LH) (w/ Daytime Running Light)
HEAD (LH) (w/o Daytime Running Light)
*2 : HEAD LO (RH) (w/ Daytime Running Light)
HEAD (RH) (w/o Daytime Running Light)
*3 : w/ Daytime Running Light
*4 : w/o Daytime Running Light

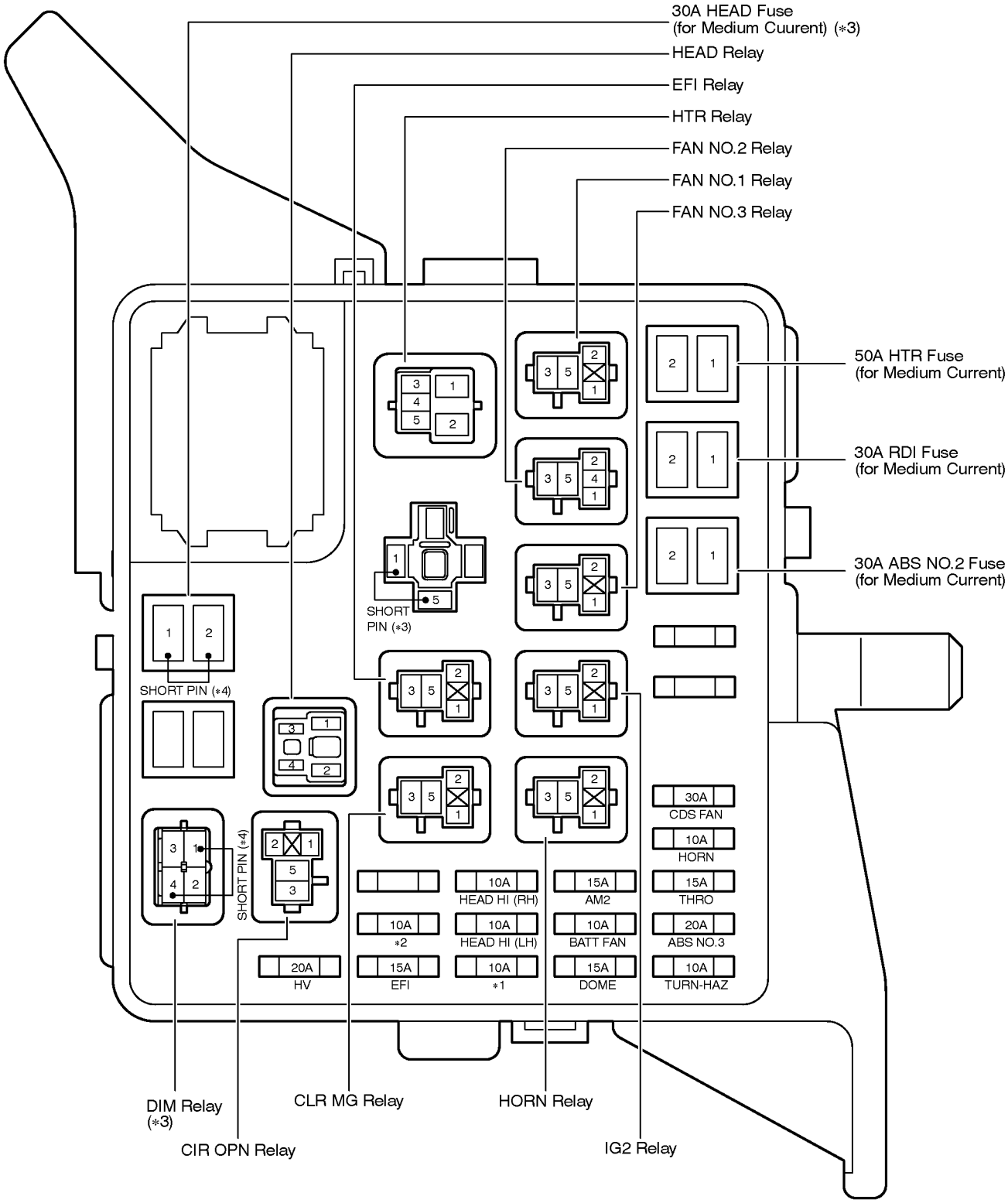

cardiagn.com

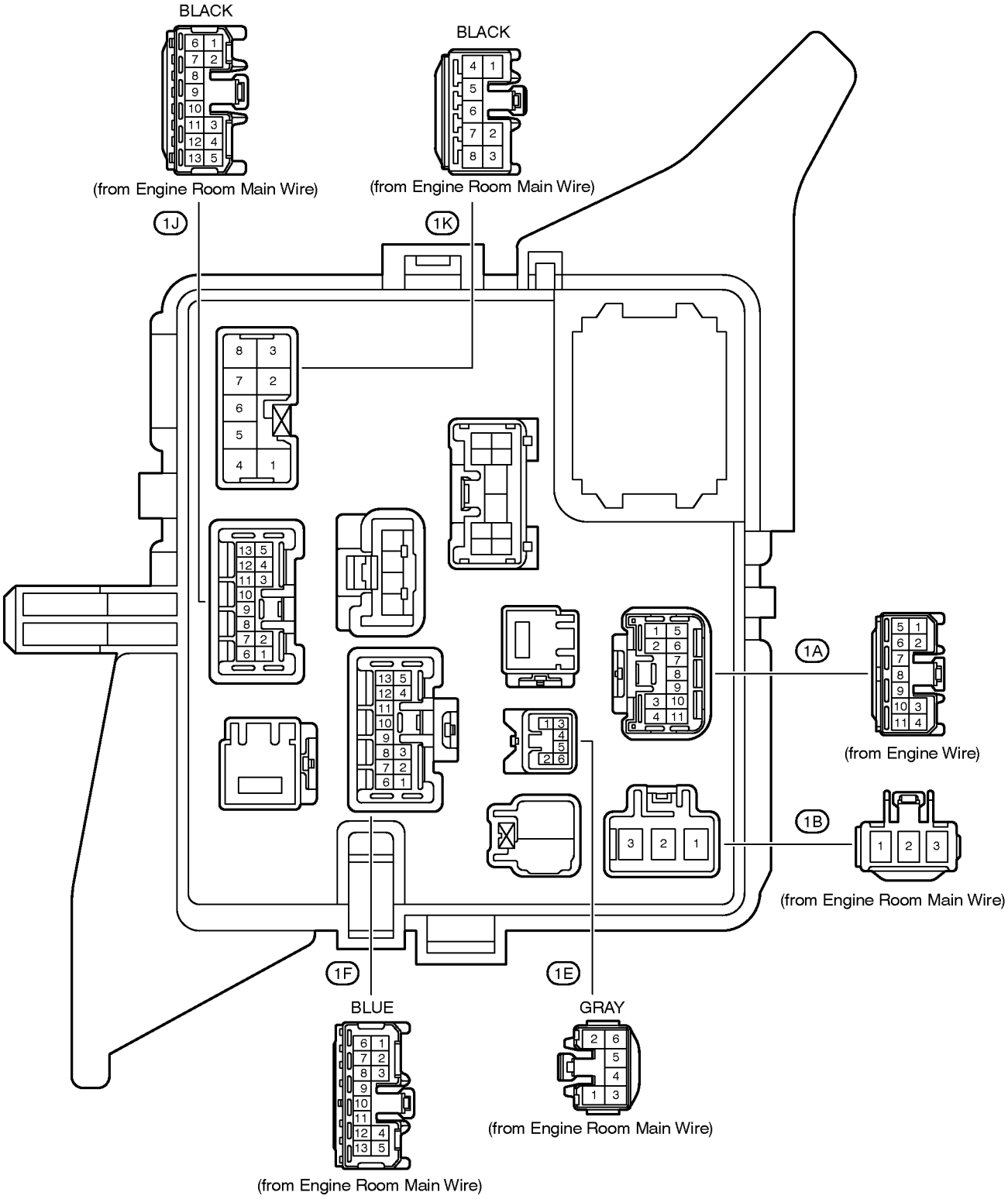

cardiagn.com

[Engine Room J/B Inner Circuit]

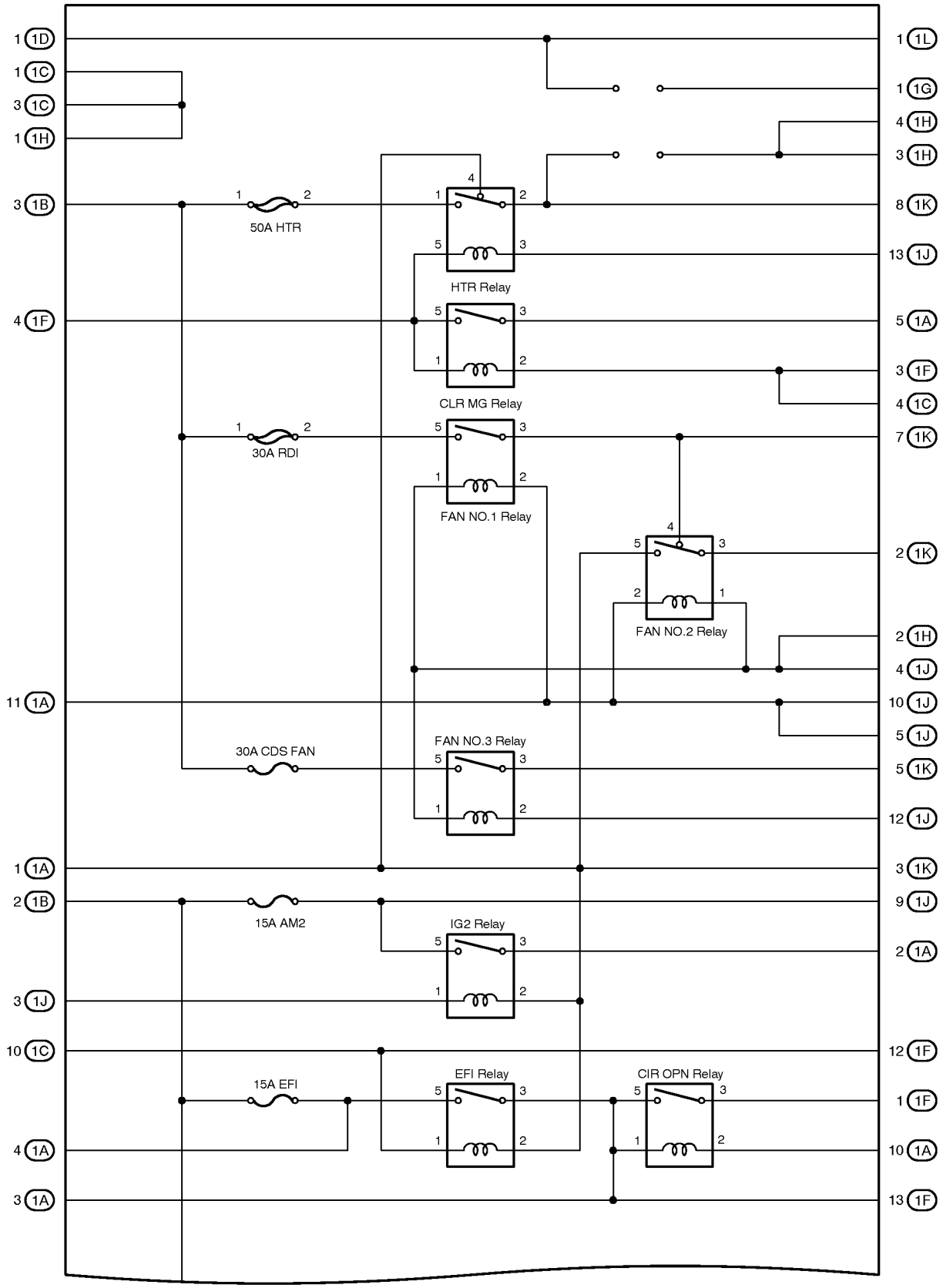

(Cont. next page)

cardiagn.com

(Cont'd)

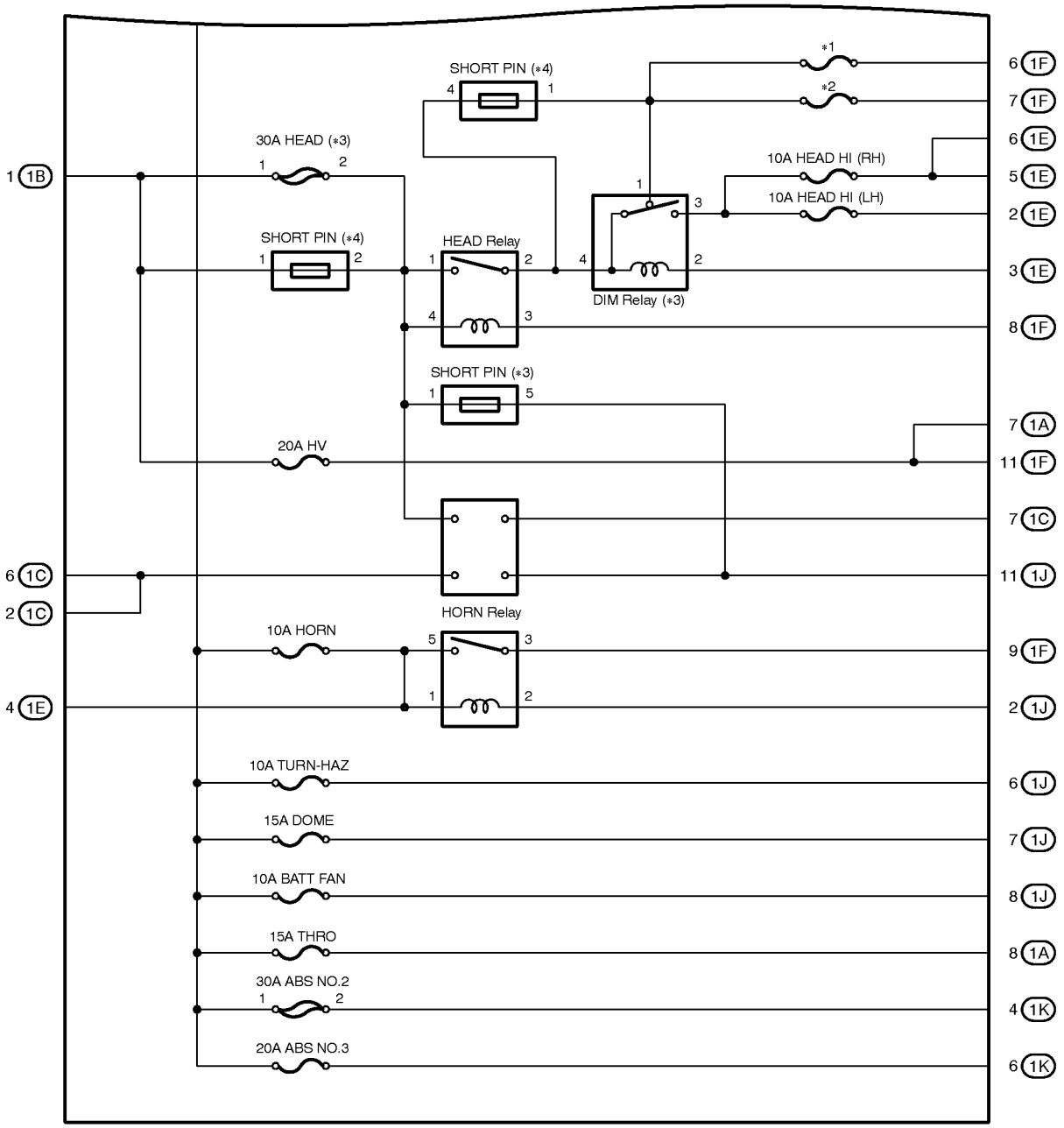

*1 : 10A HEAD LO (LH) (w/ Daytime Running Light)
10A HEAD (LH) (w/o Daytime Running Light)
*2 : 10A HEAD LO (RH) (w/ Daytime Running Light)
10A HEAD (RH) (w/o Daytime Running Light)
*3 : w/ Daytime Running Light
*4 : w/o Daytime Running Light

cardiagn.com

F RELAY LOCATIONS

: Instrument Panel J/B	Cowl Side Panel LH (See Page 20)

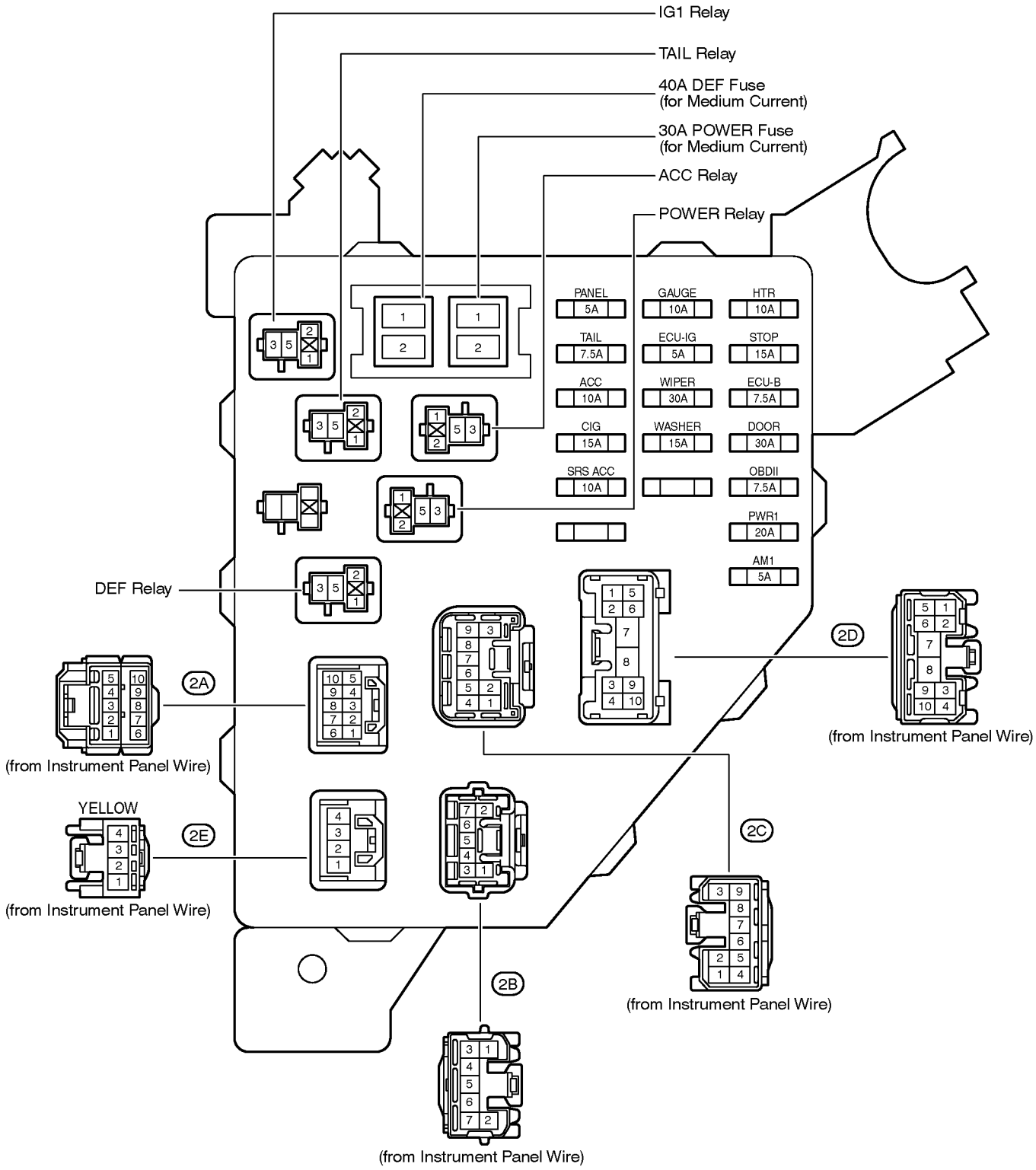

cardiagn.com

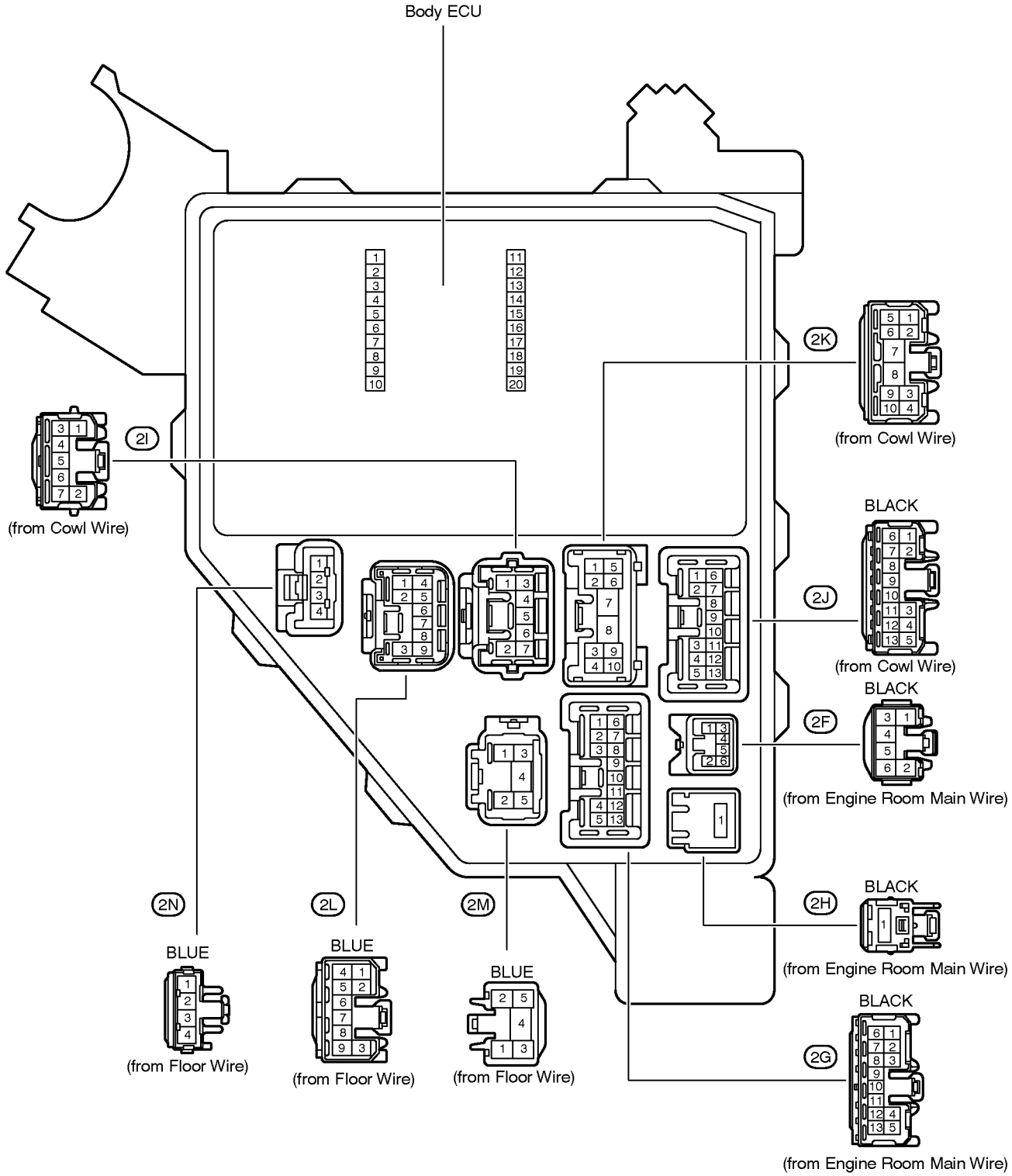

cardiagn.com

[Instrument Panel J/B Inner Circuit]

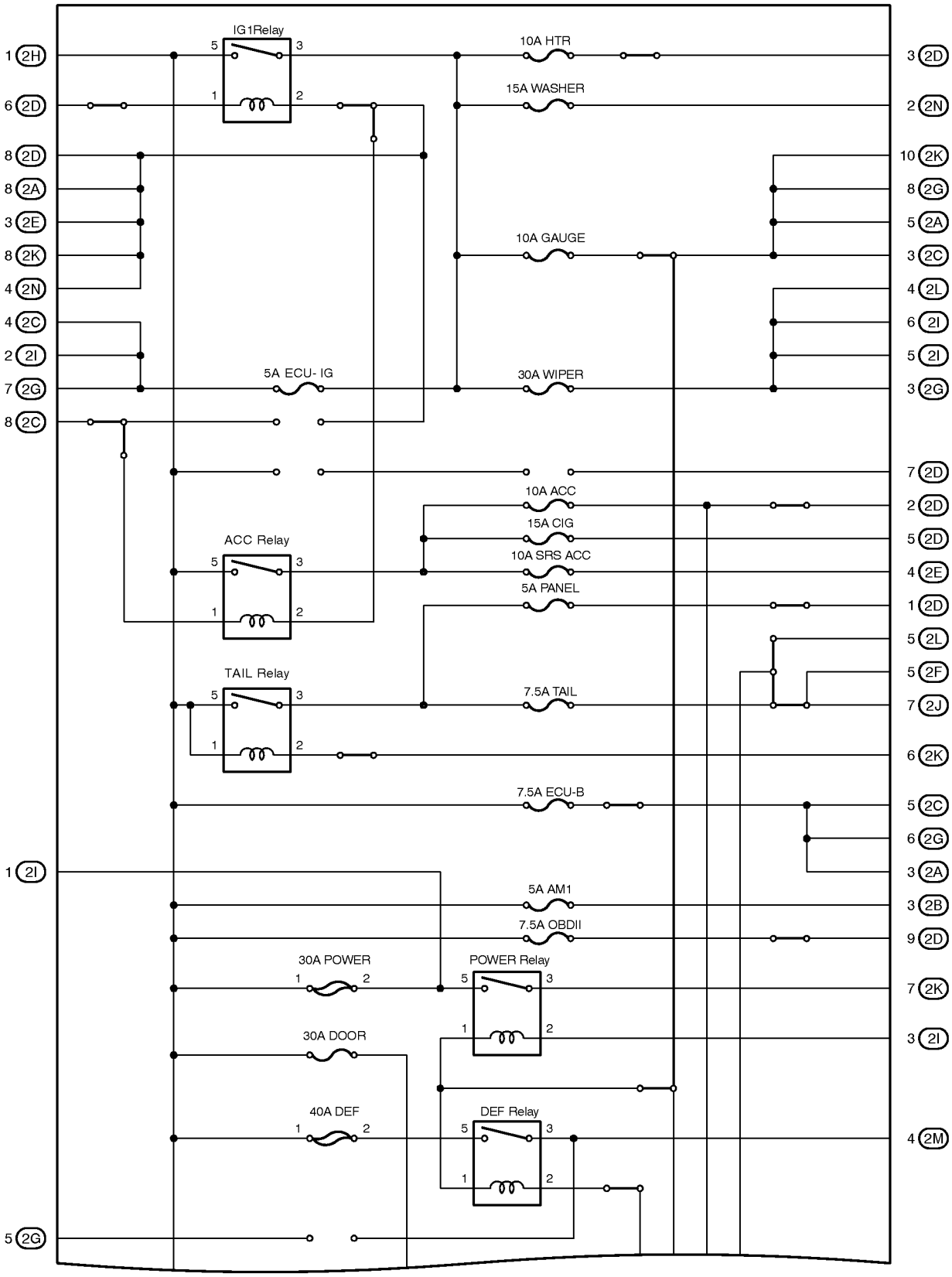

(Cont. next page)

cardiagn.com

(Cont'd)

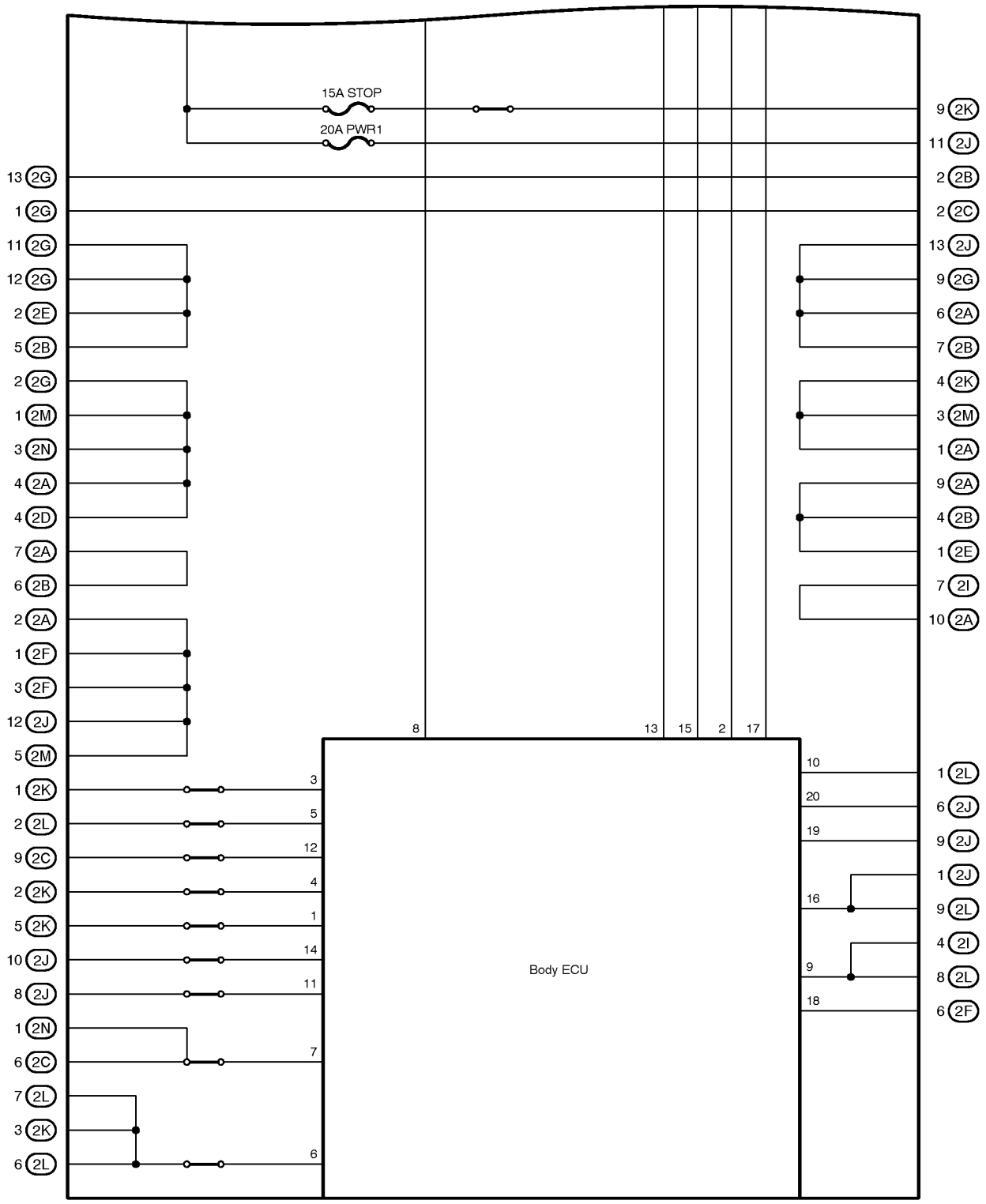

cardiagn.com

Position of Parts in Engine Compartment

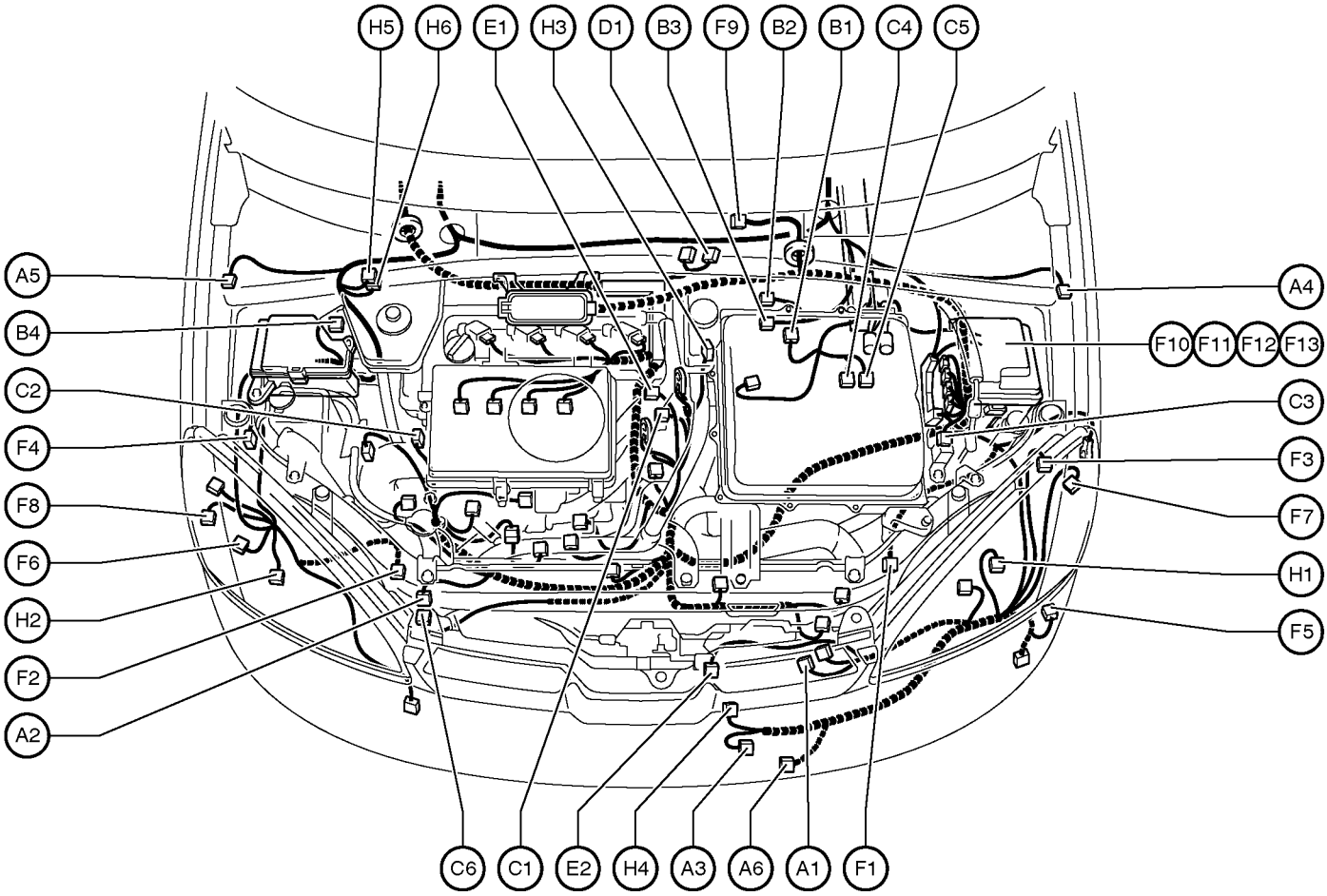

A 1 A/C Condenser Fan Motor
A 2 A/C Magnetic Clutch and Lock Sensor
A 3 A/C Triple Pressure SW
(A/C Dual and Single Pressure SW)
A 4 ABS Speed Sensor Front LH
A 5 ABS Speed Sensor Front RH
A 6 Ambient Temp. Sensor

B 1 Brake Actuator
B 2 Brake Actuator
B 3 Brake Actuator
B 4 Brake Fluid Level Warning SW

C 1 Camshaft Position Sensor
C 2 Camshaft Timing Oil Control Valve
C 3 Circuit Breaker Sensor
C 4 Converter
C 5 Converter
C 6 Crankshaft Position Sensor

D 1 DC Motor

E 1 Engine Coolant Temp. Sensor
E 2 Engine Hood Courtesy SW

F 1 Front Airbag Sensor LH
F 2 Front Airbag Sensor RH
F 3 Front Parking Light LH
F 4 Front Parking Light RH
F 5 Front Side Marker Light LH
F 6 Front Side Marker Light RH
F 7 Front Turn Signal Light LH
F 8 Front Turn Signal Light RH
F 9 Front Wiper Motor
F 10 Fusible Link Block No.1
F 11 Fusible Link Block No.1
F 12 Fusible Link Block No.1
F 13 Fusible Link Block No.1

H 1 Headlight LH
H 2 Headlight RH
H 3 Heated Oxygen Sensor (Bank 1 Sensor1)
H 4 Horn
H 5 Hydraulic Booster
H 6 Hydraulic Booster

cardiagn.com

Position of Parts in Engine Compartment

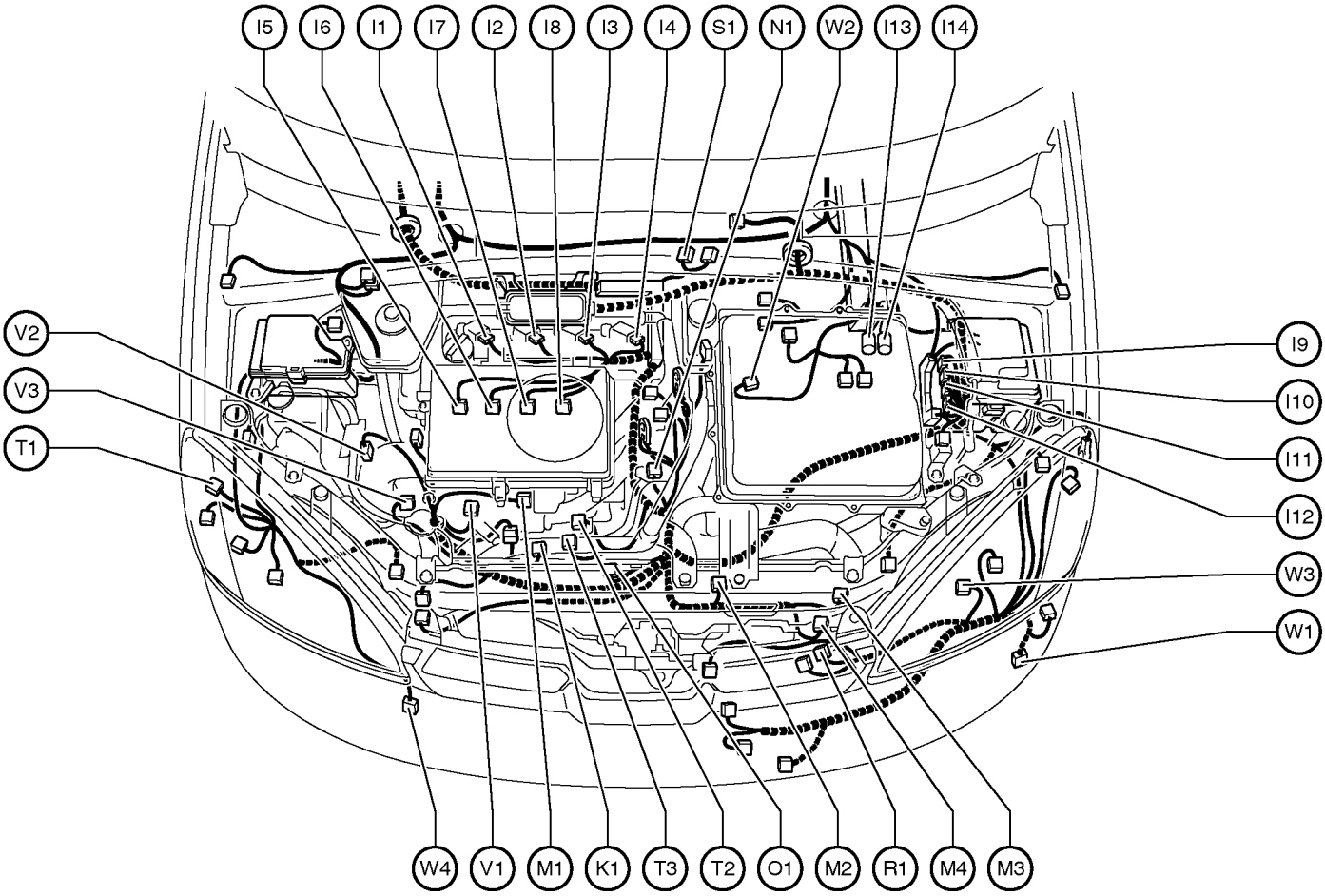

I 1 Ignition Coil and Igniter No.1
I 2 Ignition Coil and Igniter No.2
I 3 Ignition Coil and Igniter No.3
I 4 Ignition Coil and Igniter No.4
I 5 Injector No.1
I 6 Injector No.2
I 7 Injector No.3
I 8 Injector No.4
I 9 Inverter
I 10 Inverter
I 11 Inverter
I 12 Inverter
I 13 Inverter
I 14 Inverter

K 1 Knock Sensor

M 1 Mass Air Flow Meter
M 2 Motor Generator No.1
M 3 Motor Generator No.2
M 4 Motor Generator No.2

N 1 Noise Filter (Ignition)

O 1 Oil Pressure SW

R 1 Radiator Fan Motor

S 1 Steering Shaft Torque Sensor

T 1 Theft Deterrent Horn
T 2 Throttle Control Motor
T 3 Throttle Position Sensor

V 1 Vacuum Sensor (HC Adsorber and Catalyst System)
V 2 VSV (EVAP)
V 3 VSV (HC Adsorber and Catalyst System)

W 1 Washer Motor
W 2 Water Pump Motor (A/C)
W 3 Water Pump Motor (Inverter)
W 4 Water Temp. SW

cardiagn.com

Position of Parts in Instrument Panel

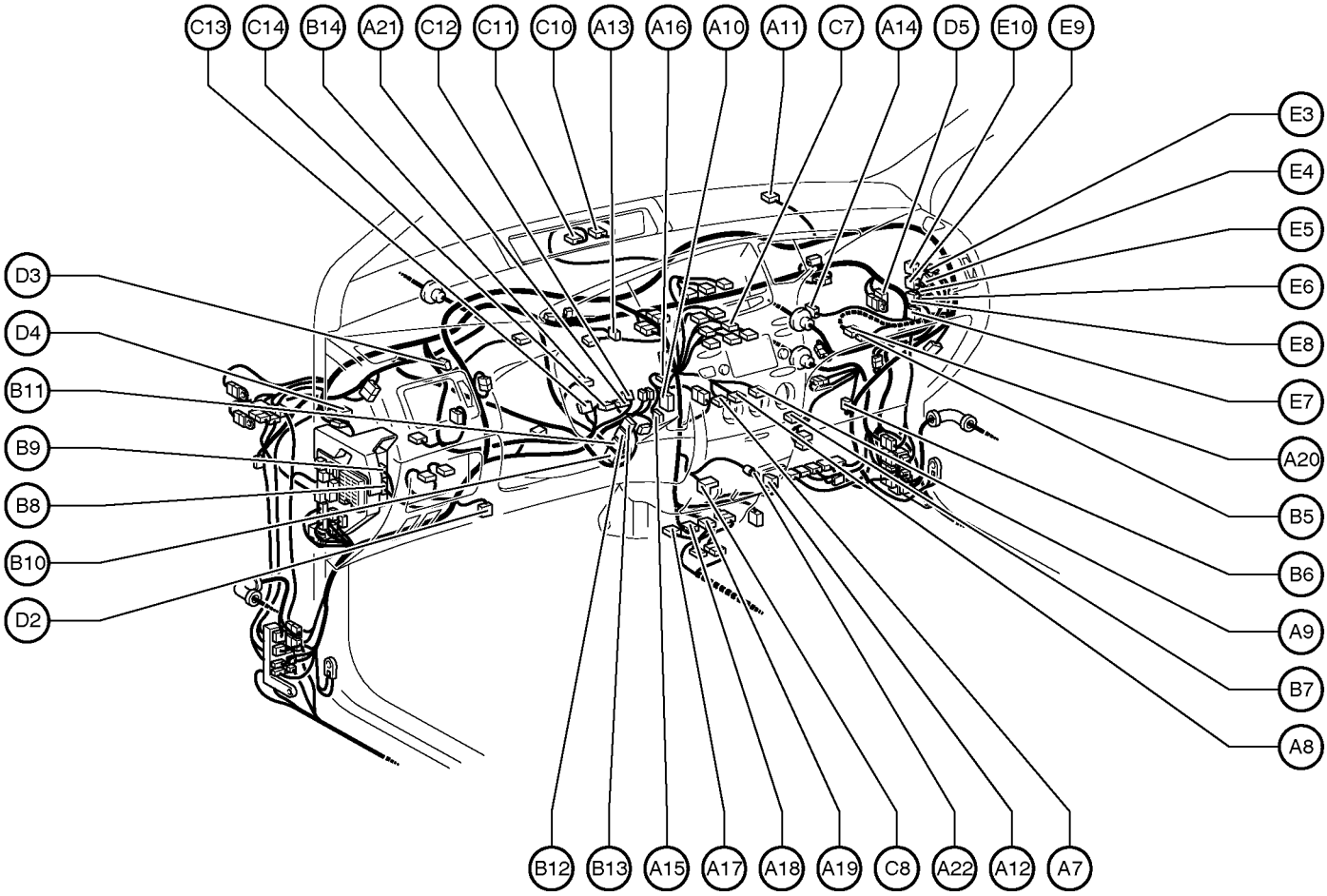

A 7 A/C Amplifier
A 8 A/C Amplifier
A 9 A/C Amplifier
A 10 A/C Room Temp. Sensor
A 11 A/C Solar Sensor
A 12 A/C Thermistor
A 13 Accel Position Sensor
A 14 Air Inlet Control Servo Motor
A 15 Air Mix Control Servo Motor
A 16 Air Vent Mode Control Servo Motor
A 17 Airbag Sensor Assembly
A 18 Airbag Sensor Assembly
A 19 Airbag Sensor Assembly
A 20 Airbag Squib (Front Passenger Airbag Assembly)
A 21 Airbag Squib (Steering Wheel Pad)
A 22 Ashtray Illumination

B 5 Back–Up Light Relay
B 6 Blower Motor
B 7 Blower Motor Linear Controller
B 8 Body ECU
B 9 Body ECU
B 10 Brake ECU
B 11 Brake ECU
B 12 Brake ECU
B 13 Brake ECU
B 14 Brake Warning Buzzer

C 7 Center Cluster SW
C 8 Cigarette Lighter
C 10 Combination Meter
C 11 Combination Meter
C 12 Combination SW
C 13 Combination SW
C 14 Combination SW

D 2 Data Link Connector 3
D 3 Daytime Running Light Relay
D 4 Diode (Door Courtesy)
D 5 Diode (Daytime Running Light)

E 3 EMPS ECU
E 4 EMPS ECU
E 5 EMPS ECU
E 6 EMPS ECU
E 7 Engine Control Module
E 8 Engine Control Module
E 9 Engine Control Module
E 10 Engine Control Module

cardiagn.com

Position of Parts in Instrument Panel

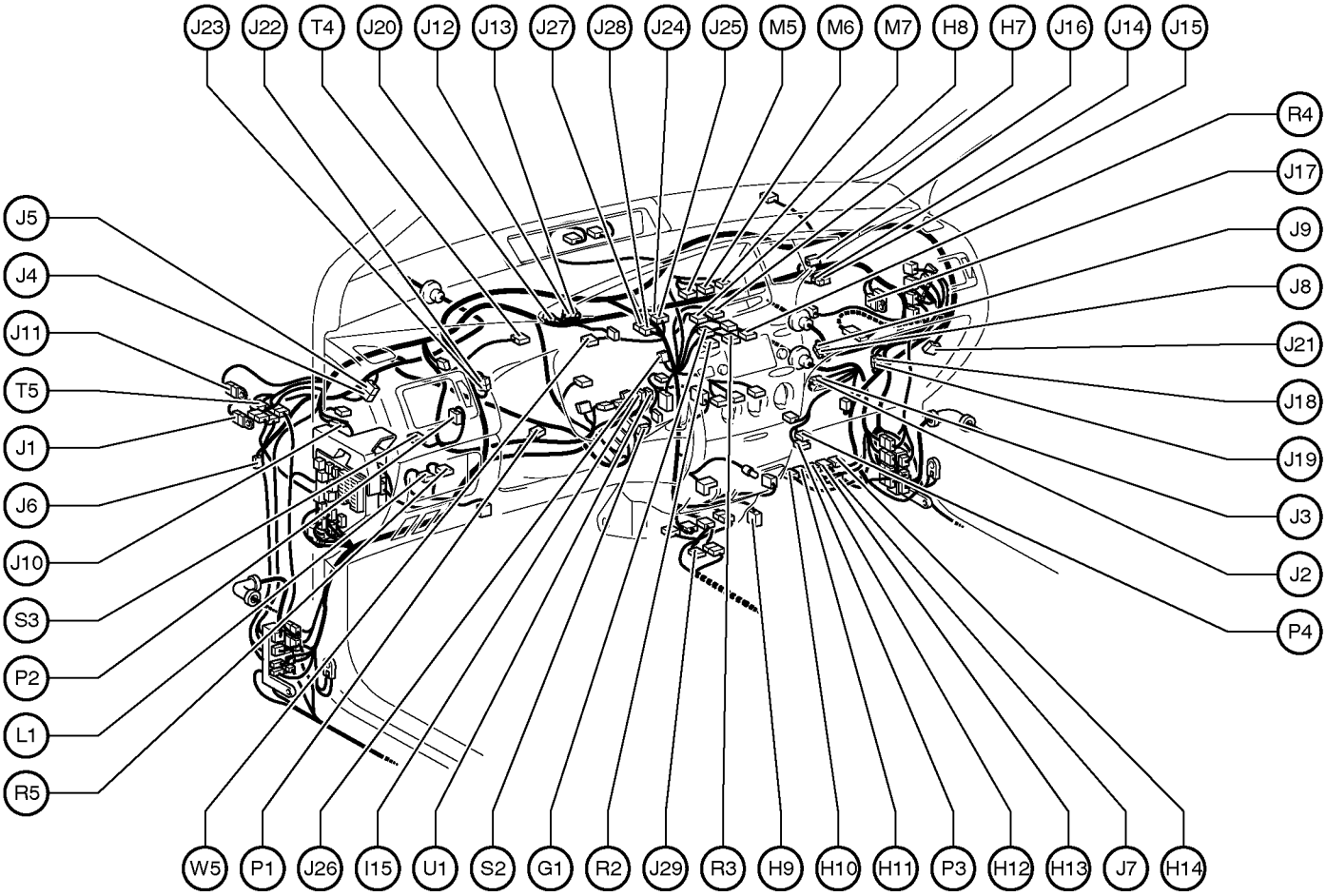

G 1 Gateway ECU

H 7 Hazard Warning SW
H 8 Hazard Warning SW
H 9 Heated Oxygen Sensor (Bank 1 Sensor 2)
H10 Hybrid Vehicle Control ECU
H11 Hybrid Vehicle Control ECU
H12 Hybrid Vehicle Control ECU
H13 Hybrid Vehicle Control ECU
H14 Hybrid Vehicle Control ECU

I 15 Ignition SW

J 1 Junction Connector
J 2 Junction Connector
J 3 Junction Connector
J 4 Junction Connector
J 5 Junction Connector
J 6 Junction Connector
J 7 Junction Connector
J 8 Junction Connector
J 9 Junction Connector
J 10 Junction Connector
J 11 Junction Connector
J 12 Junction Connector
J 13 Junction Connector
J 14 Junction Connector
J 15 Junction Connector
J 16 Junction Connector
J 17 Junction Connector
J 18 Junction Connector
J 19 Junction Connector
J 20 Junction Connector
J 21 Junction Connector
J 22 Junction Connector
J 23 Junction Connector
J 24 Junction Connector
J 25 Junction Connector
J 26 Junction Connector
J 27 Junction Connector
J 28 Junction Connector
J 29 Junction Connector

L 1 Light Control Rheostat

M 5 Multi Display
M 6 Multi Display
M 7 Multi Display

P 1 Park/Neutral Position SW
P 2 Parking Brake SW
P 3 PTC Heater
P 4 PTC Heater

R 2 Radio and Player
R 3 Radio and Player
R 4 Radio and Player
R 5 Remote Control Mirror SW

S 2 Shift Lock ECU
S 3 Stop Light SW

T 4 Transponder Key Computer
T 5 Turn Signal Flasher Relay

U 1 Unlock Warning SW and Key Interlock Solenoid

W 5 Wireless Door Control Receiver

cardiagn.com

Position of Parts in Body

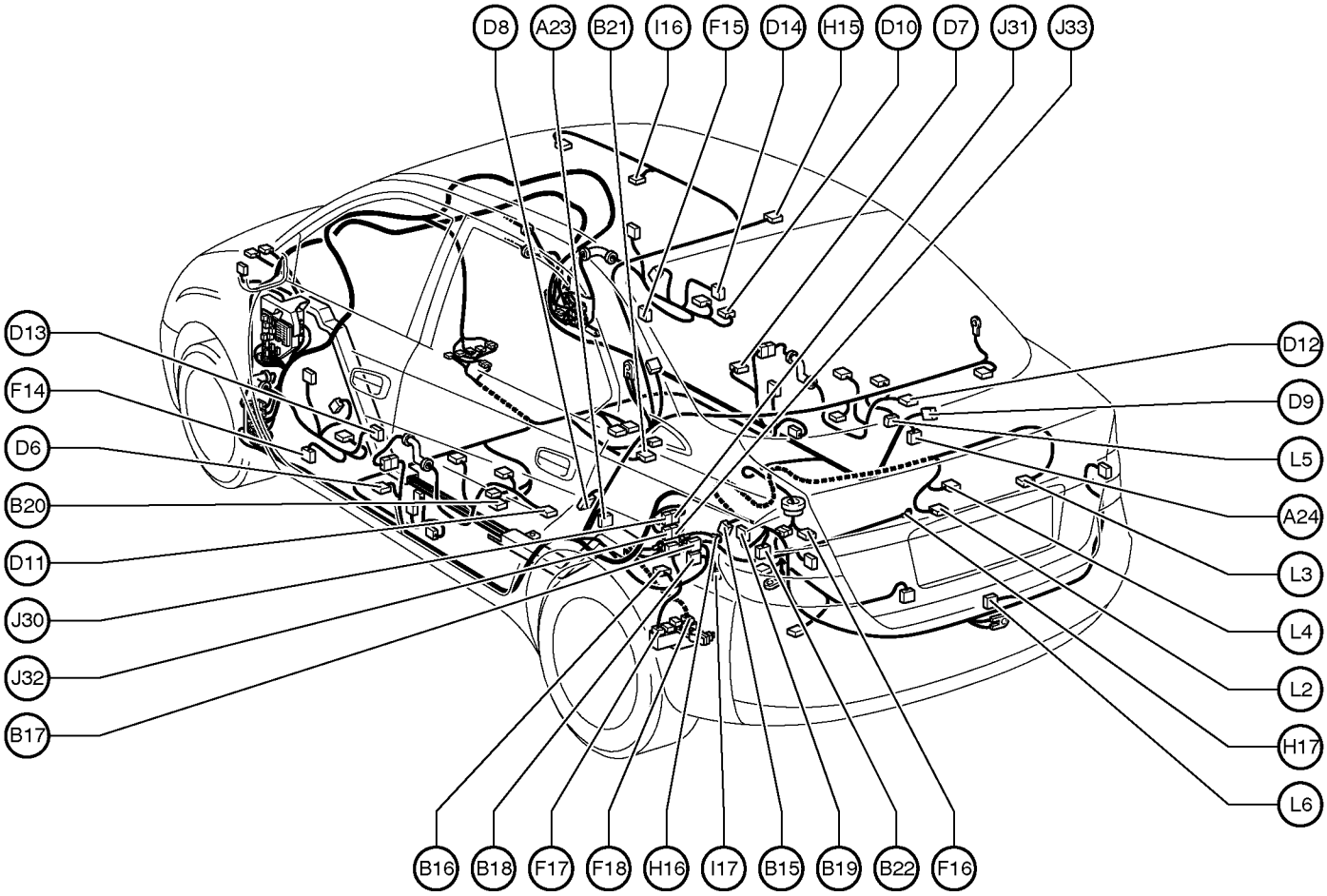

A 23 ABS Speed Sensor Rear LH
A 24 ABS Speed Sensor Rear RH

B 15 Battery Blower Motor
B 16 Battery Blower Motor Controller
B 17 Battery ECU
B 18 Battery ECU
B 19 Battery Fan Relay
B 20 Buckle SW and Tension Reducer LH
B 21 Buckle SW RH and Seat Belt Warning Occupant Detection Sensor
B 22 Battery Input Relay

D 6 Door Courtesy SW Front LH
D 7 Door Courtesy SW Front RH
D 8 Door Courtesy SW Rear LH
D 9 Door Courtesy SW Rear RH
D 10 Door Lock Control SW Front RH
D 11 Door Lock Motor and Door Unlock Detection SW Rear LH
D 12 Door Lock Motor and Door Unlock Detection SW Rear RH
D 13 Door Lock Motor, Door Key Lock and Unlock SW and Door Unlock Detection SW Front LH
D 14 Door Lock Motor, Door Key Lock and Unlock SW and Door Unlock Detection SW Front RH

F 14 Front Door Speaker LH
F 15 Front Door Speaker RH
F 16 Fuel Pump and Fuel Sender
F 17 Fusible Link Block No.2
F 18 Fusible Link Block No.2

H 15 High Mounted Stop Light
H 16 Hybrid Vehicle Battery
H 17 Hybrid Vehicle Battery

I 16 Interior Light
I 17 Interlock SW

J 30 Junction Connector
J 31 Junction Connector
J 32 Junction Connector
J 33 Junction Connector

L 2 License Plate Light LH
L 3 License Plate Light RH
L 4 Luggage Compartment Door Unlock SW
L 5 Luggage Compartment Light
L 6 Luggage Compartment Light SW

cardiagn.com

Position of Parts in Body

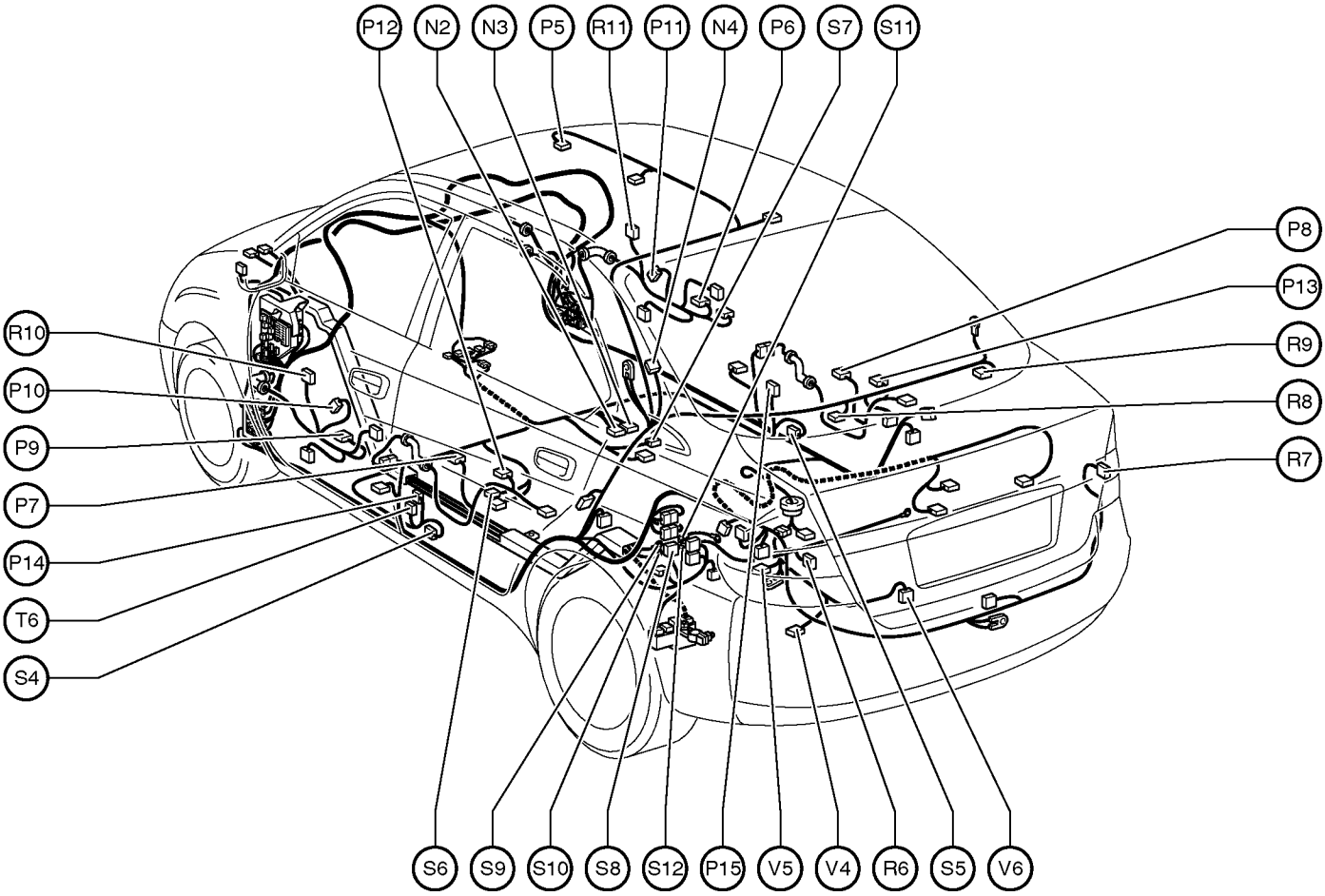

N 2 Navigation ECU
N 3 Navigation ECU
N 4 Noise Filter (Rear Window Defogger)

P 5 Personal Light
P 6 Power Window Control SW Front RH
P 7 Power Window Control SW Rear LH
P 8 Power Window Control SW Rear RH
P 9 Power Window Master SW
P 10 Power Window Motor Front LH
P 11 Power Window Motor Front RH
P 12 Power Window Motor Rear LH
P 13 Power Window Motor Rear RH
P 14 Pretensioner LH
P 15 Pretensioner RH

R 6 Rear Combination Light LH
R 7 Rear Combination Light RH
R 8 Rear Speaker LH
R 9 Rear Speaker RH
R 10 Remote Control Mirror LH
R 11 Remote Control Mirror RH

S 4 Side Airbag Sensor LH
S 5 Side Airbag Sensor RH
S 6 Side Airbag Squib LH
S 7 Side Airbag Squib RH
S 8 System Main Relay
S 9 System Main Relay
S 10 System Main Relay
S 11 System Main Relay
S 12 System Main Relay

T 6 Tension Reducer Solenoid

V 4 Vapor Pressure Sensor
V 5 VSV (Canister Closed Valve)
V 6 VSV (Parge Flow Switching Valve)

cardiagn.com

G ELECTRICAL WIRING ROUTING

▭ : Location of Connector Joining Wire Harness and Wire Harness
▽ : Location of Ground Points

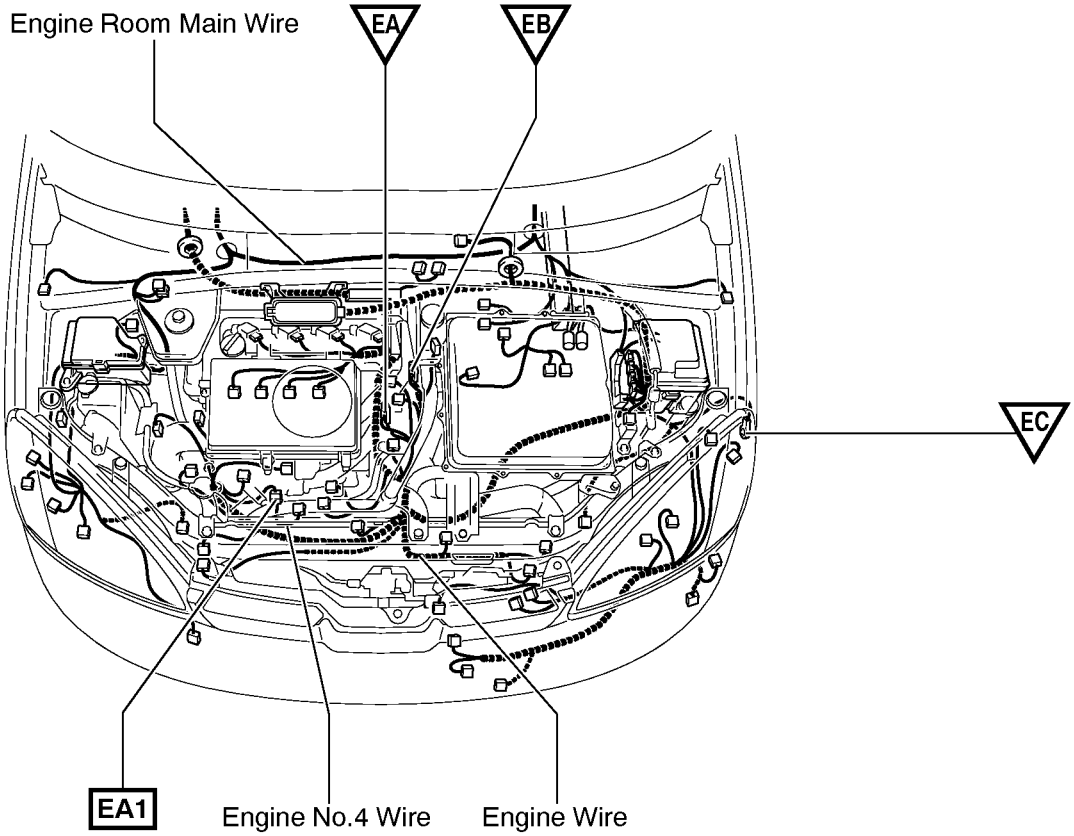

⬡ : Location of Splice Points

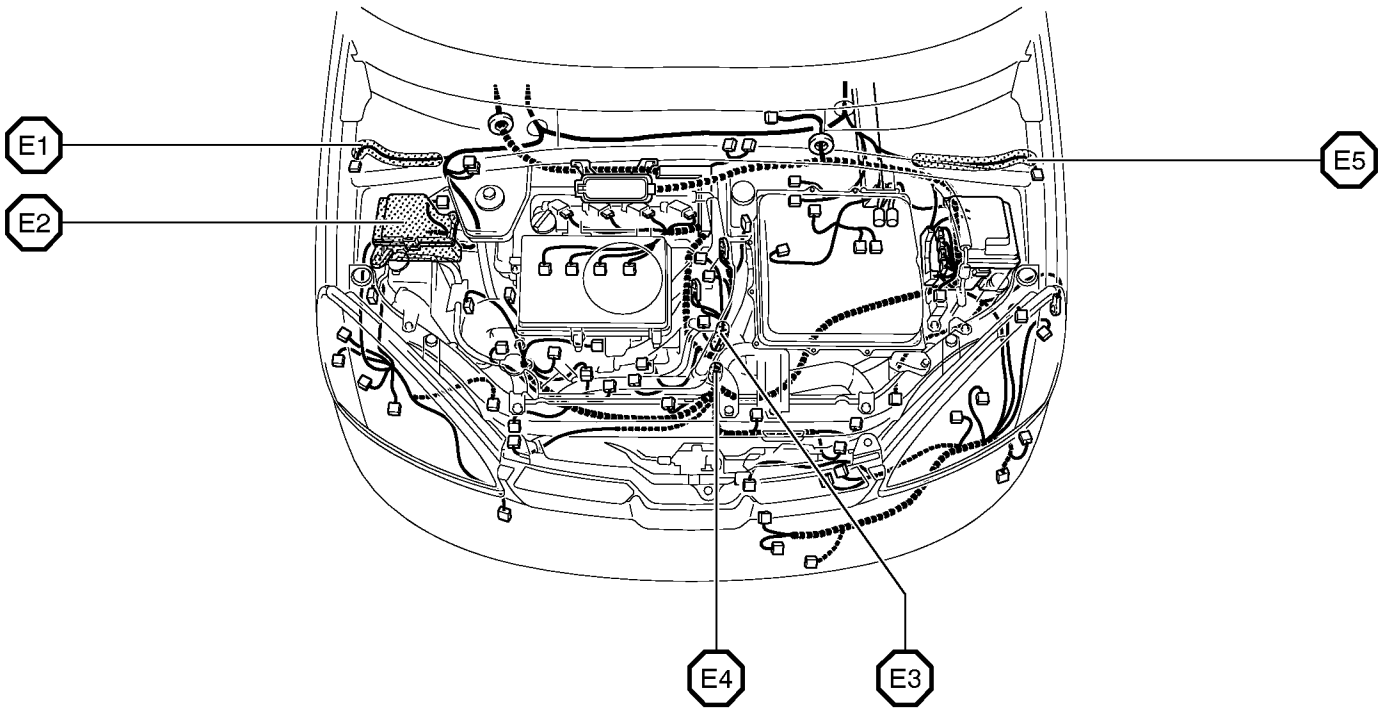

cardiagn.com

Connector Joining Wire Harness and Wire Harness

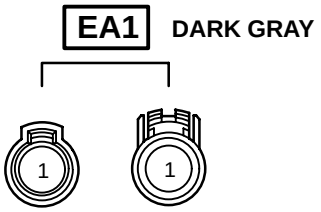

Code	Joining Wire Harness and Wire Harness (Connector Location)
EA1	Engine Wire and Engine No.4 Wire (Near the Radiator Fan)

cardiagn.com

▭ : Location of Connector Joining Wire Harness and Wire Harness

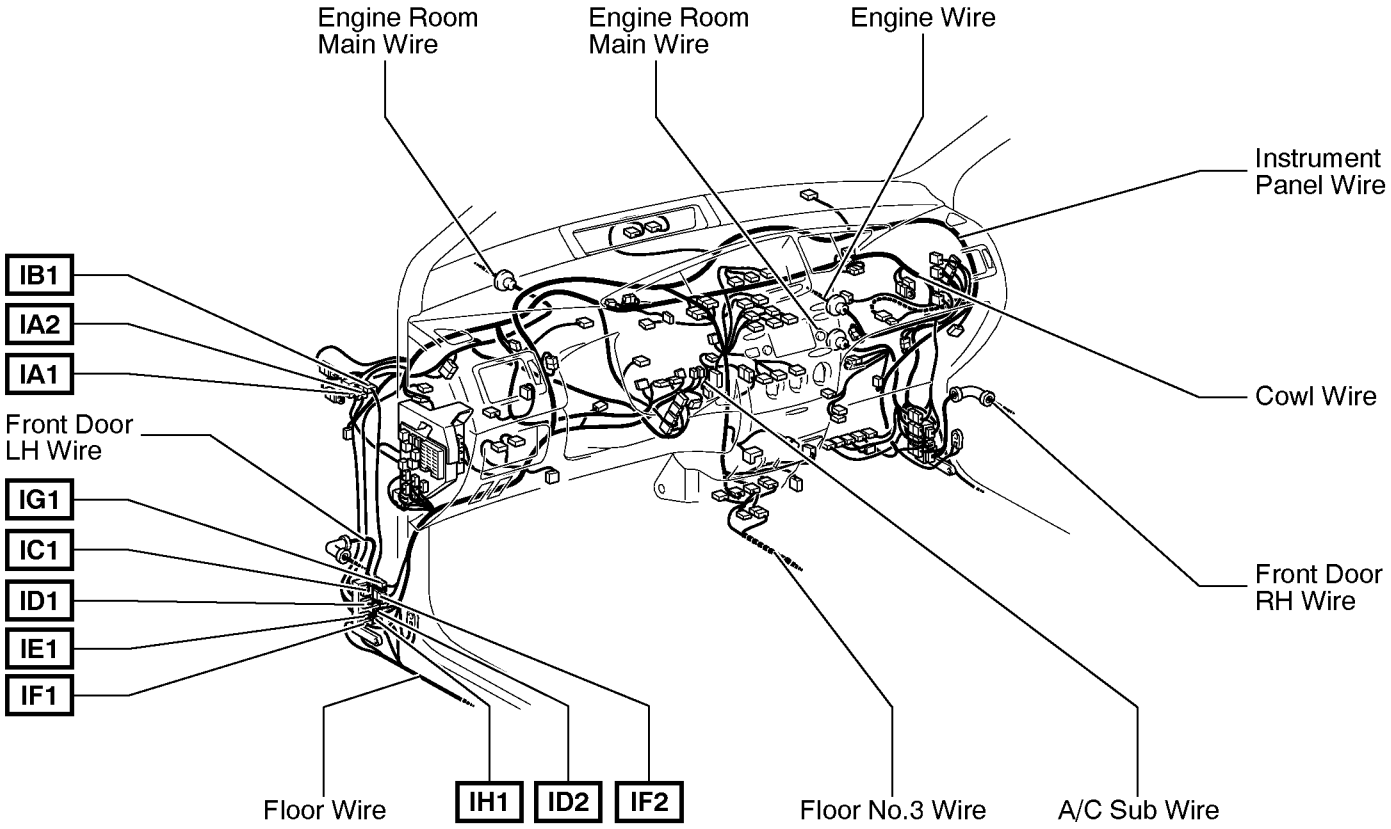

▽ : Location of Ground Points

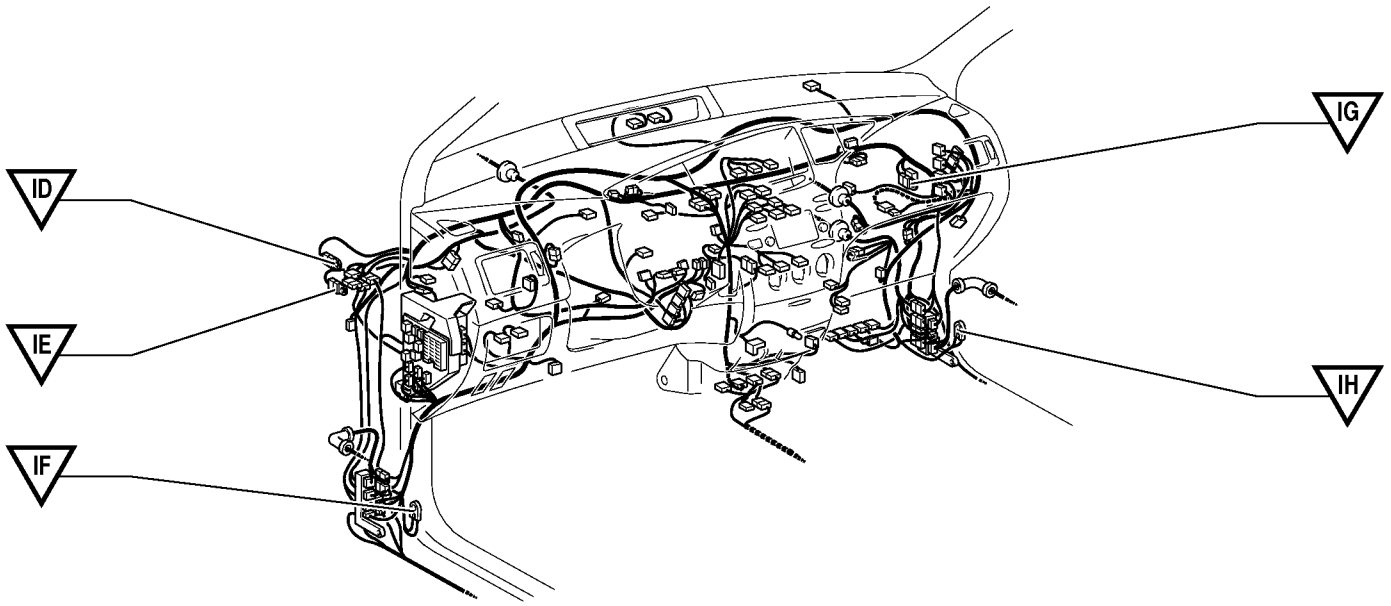

cardiagn.com

Connector Joining Wire Harness and Wire Harness

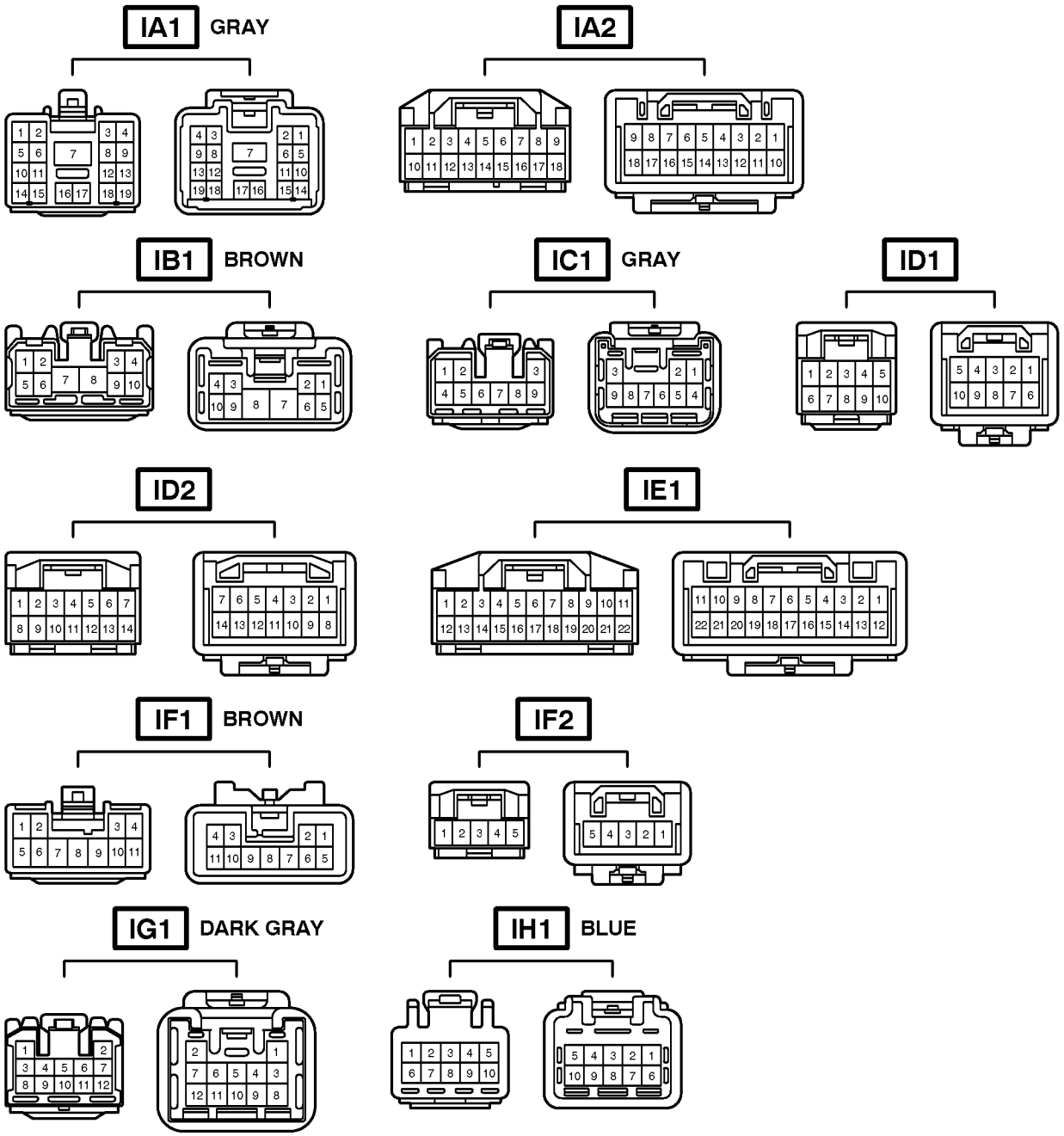

Code	Joining Wire Harness and Wire Harness (Connector Location)
IA1	Engine Room Main Wire and Cowl Wire (Cowl Side Panel LH)
IA2	
IB1	Floor Wire and Cowl Wire (Cowl Side Panel LH)
IC1	Front Door LH Wire and Cowl Wire (Left Kick Panel)
ID1	Instrument Panel Wire and Cowl Wire (Left Kick Panel)
ID2	
IE1	Instrument Panel Wire and Engine Room Main Wire (Left Kick Panel)
IF1	Instrument Panel Wire and Floor Wire (Left Kick Panel)
IF2	
IG1	Front Door LH Wire and Instrument Panel Wire (Left Kick Panel)
IH1	Floor Wire and Engine Room Main Wire (Left Kick Panel)

cardiagn.com

▭ : Location of Connector Joining Wire Harness and Wire Harness

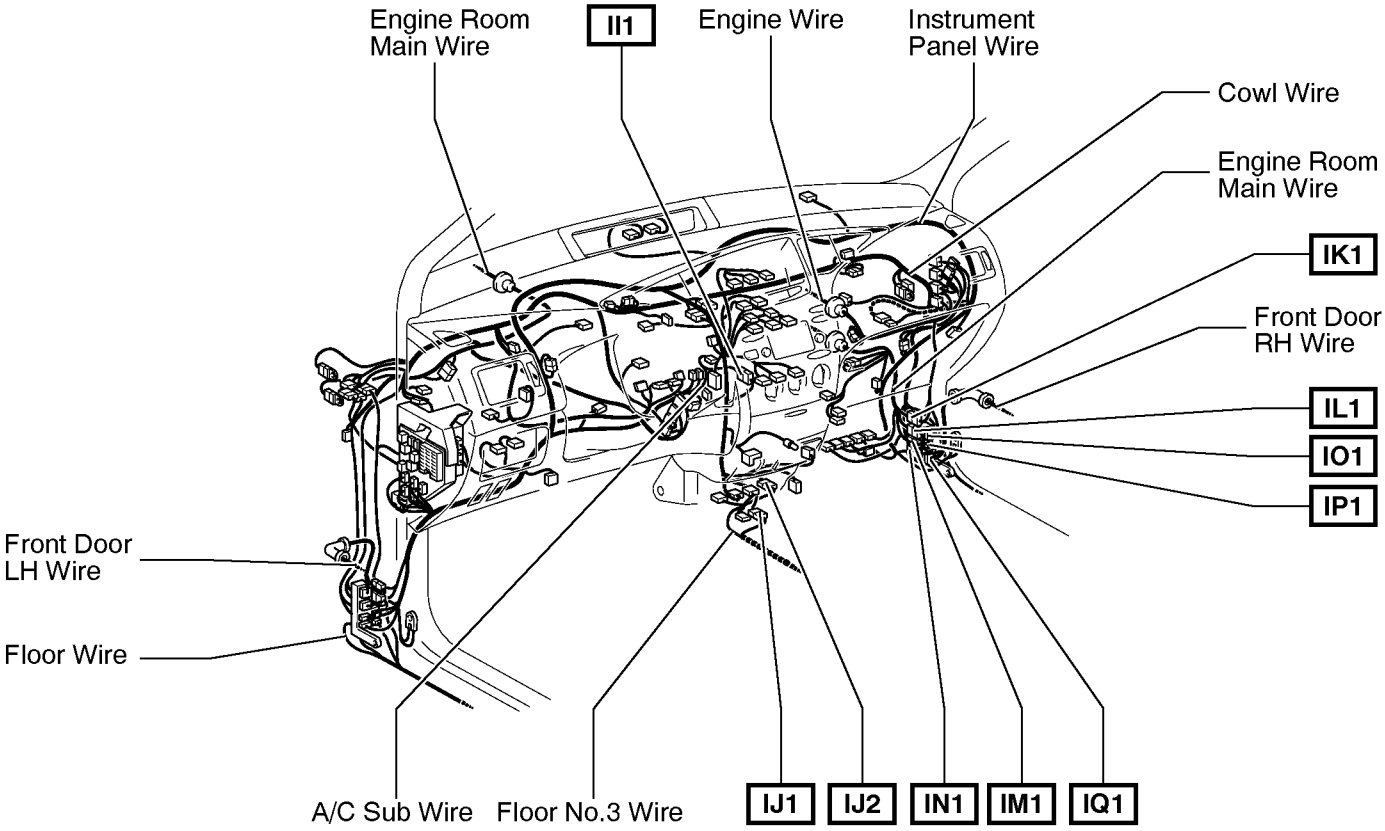

⬡ : Location of Splice Points

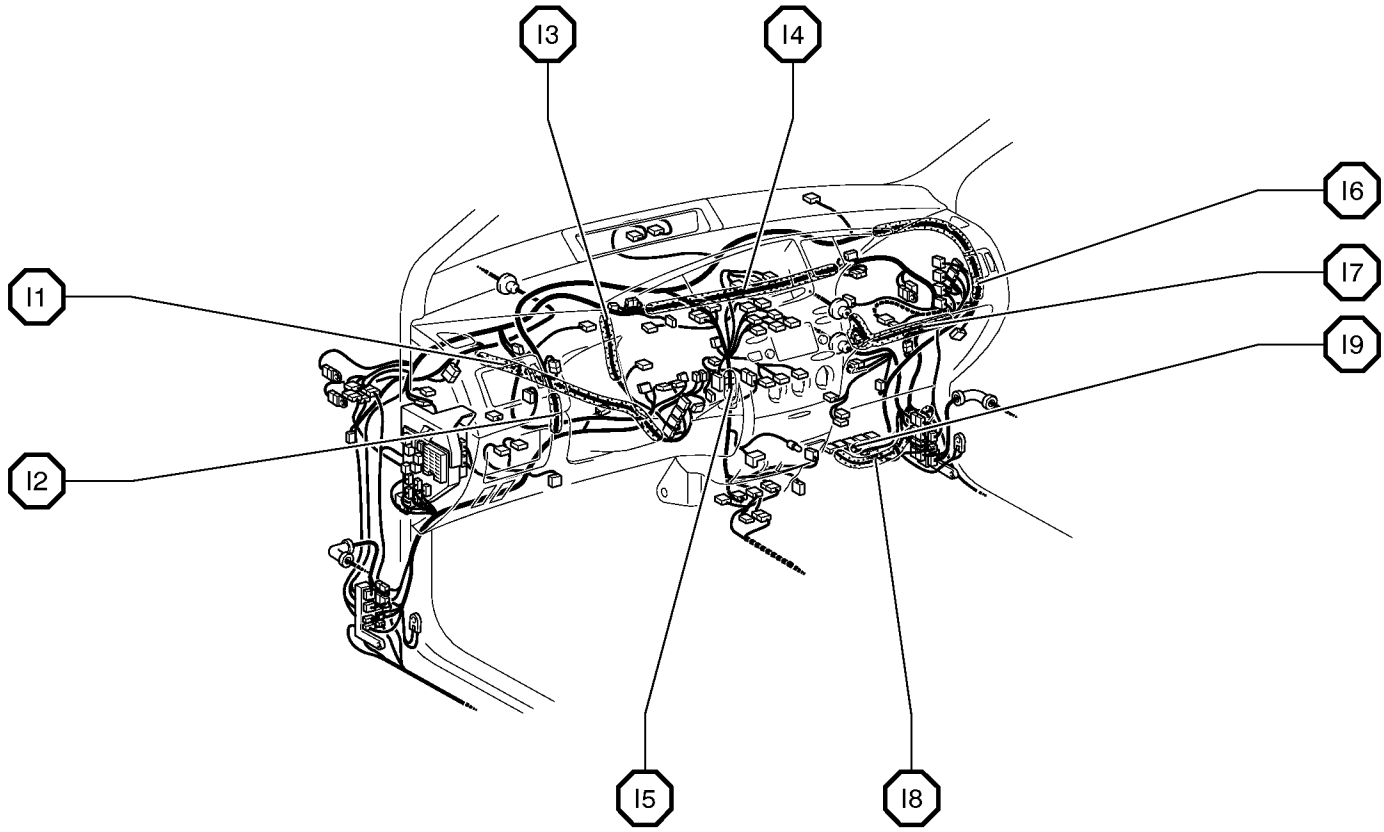

cardiagn.com

Connector Joining Wire Harness and Wire Harness

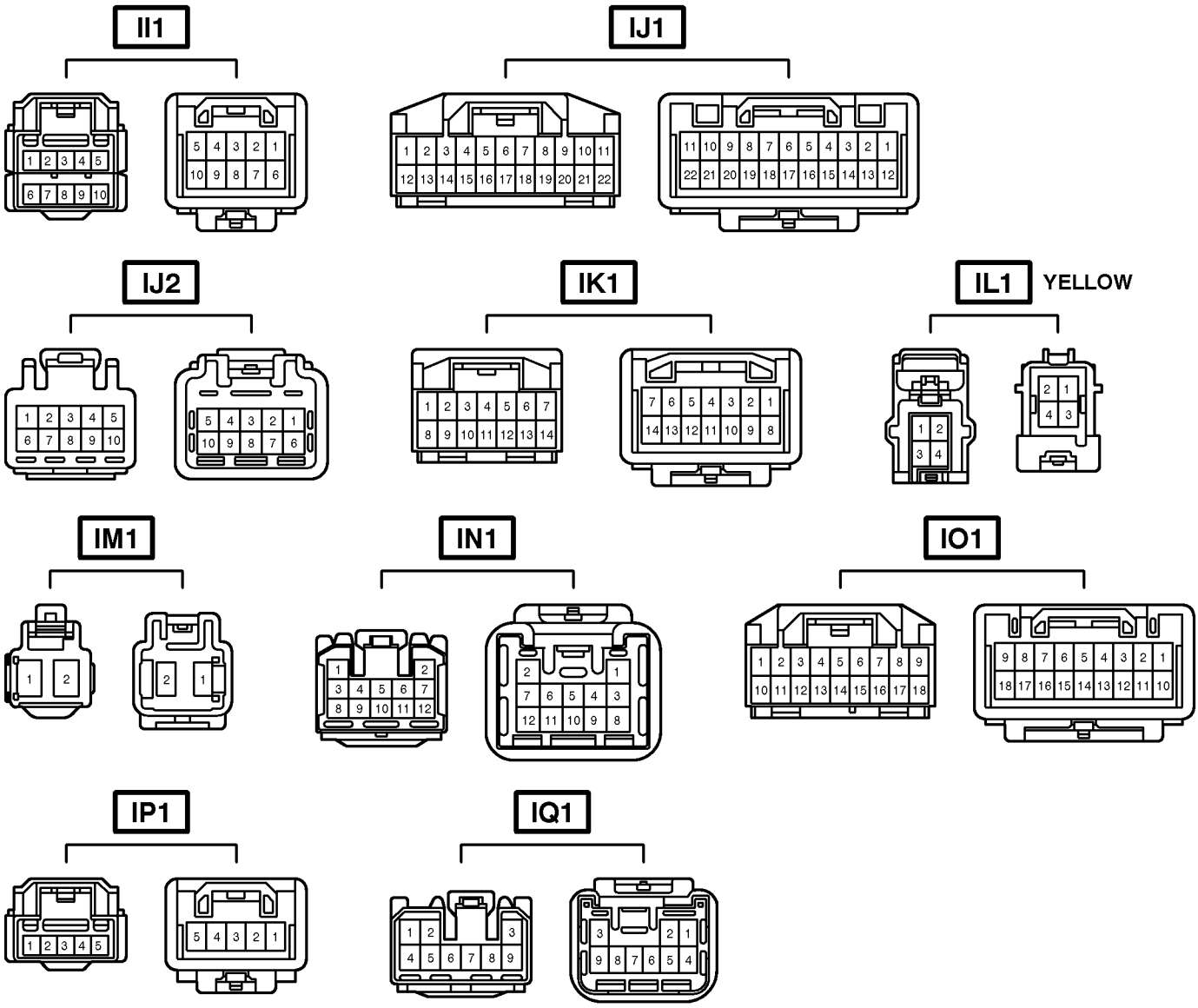

Code	Joining Wire Harness and Wire Harness (Connector Location)
II1	Instrument Panel Wire and A/C Sub Wire (Instrument Panel Brace LH)
IJ1	Floor No.3 Wire and Instrument Panel Wire (Under the Instrument Panel Center)
IJ2	
IK1	Engine Wire and Engine Room Main Wire (Right Kick Panel)
IL1	Instrument Panel Wire and Engine Room Main Wire (Right Kick Panel)
IM1	Engine Room Main Wire and Cowl Wire (Right Kick Panel)
IN1	Front Door RH Wire and Instrument Panel Wire (Right Kick Panel)
IO1	Engine Wire and Cowl Wire (Right Kick Panel)
IP1	Instrument Panel Wire and Cowl Wire (Right Kick Panel)
IQ1	Front Door RH Wire and Cowl Wire (Right Kick Panel)

cardiagn.com

G ELECTRICAL WIRING ROUTING

▭ : Location of Connector Joining Wire Harness and Wire Harness

▽ : Location of Ground Points

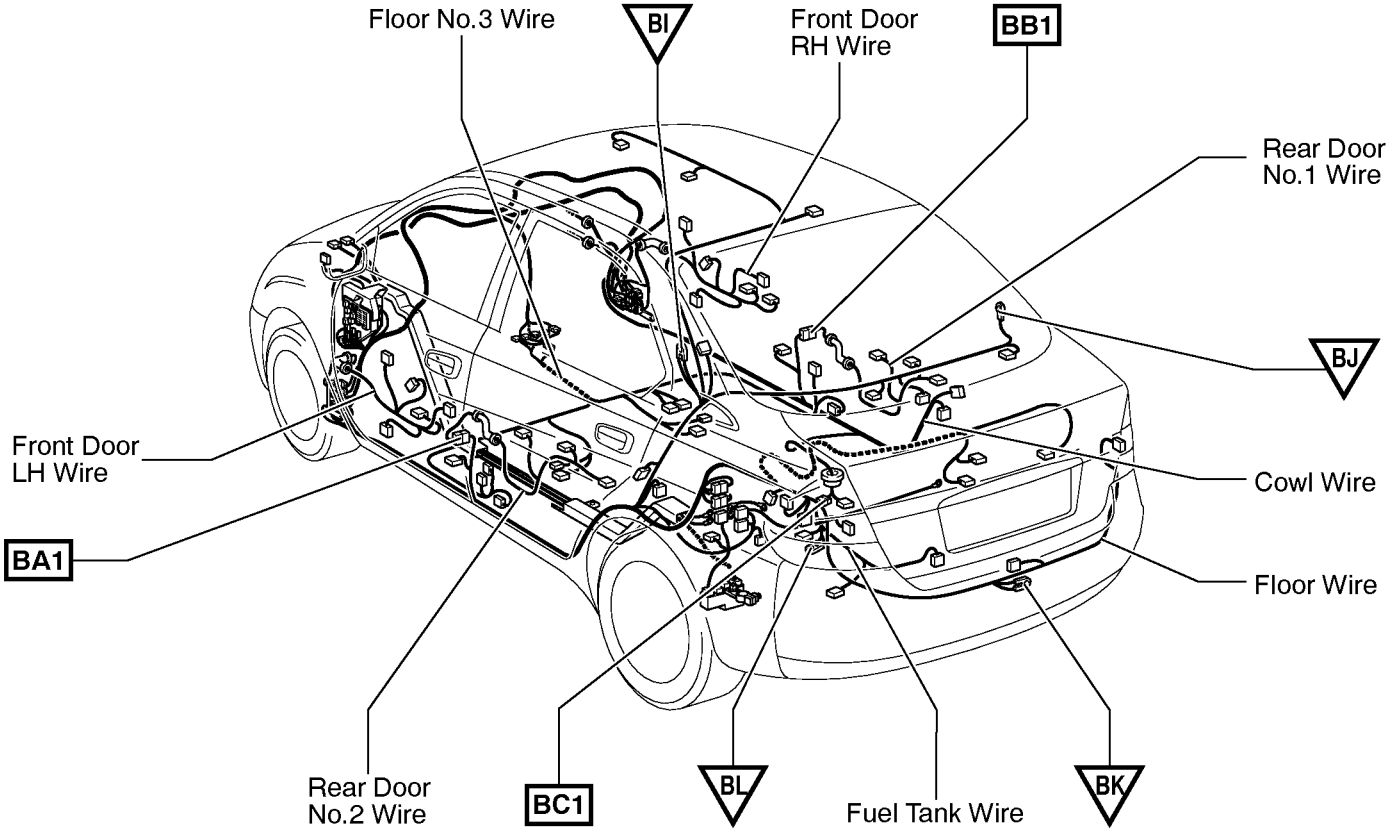

⬡ : Location of Splice Points

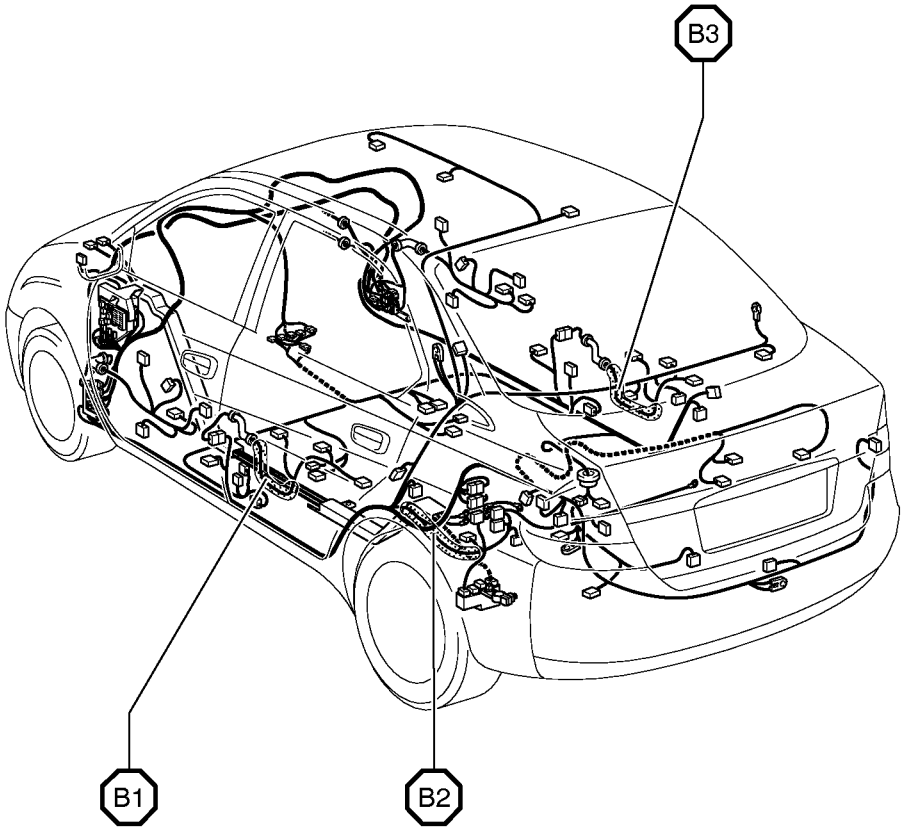

cardiagn.com

Connector Joining Wire Harness and Wire Harness

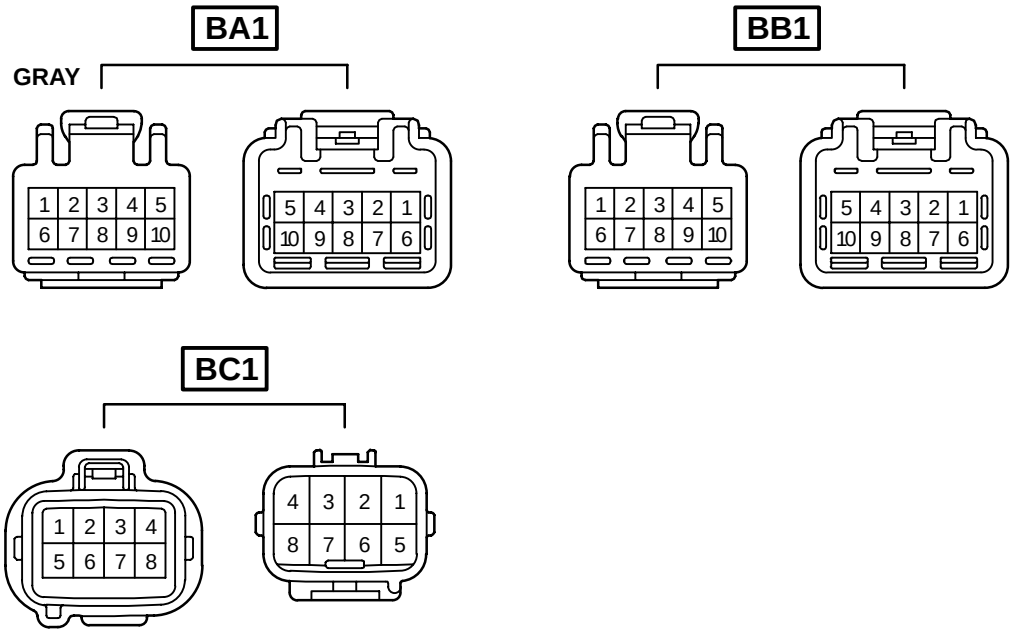

Code	Joining Wire Harness and Wire Harness (Connector Location)
BA1	Rear Door No.2 Wire and Floor Wire (Center Pillar LH)
BB1	Rear Door No.1 Wire and Cowl Wire (Center Pillar RH)
BC1	Cowl Wire and Fuel Tank Wire (Near the Fuel Tank)

cardiagn.com

POWER SOURCE

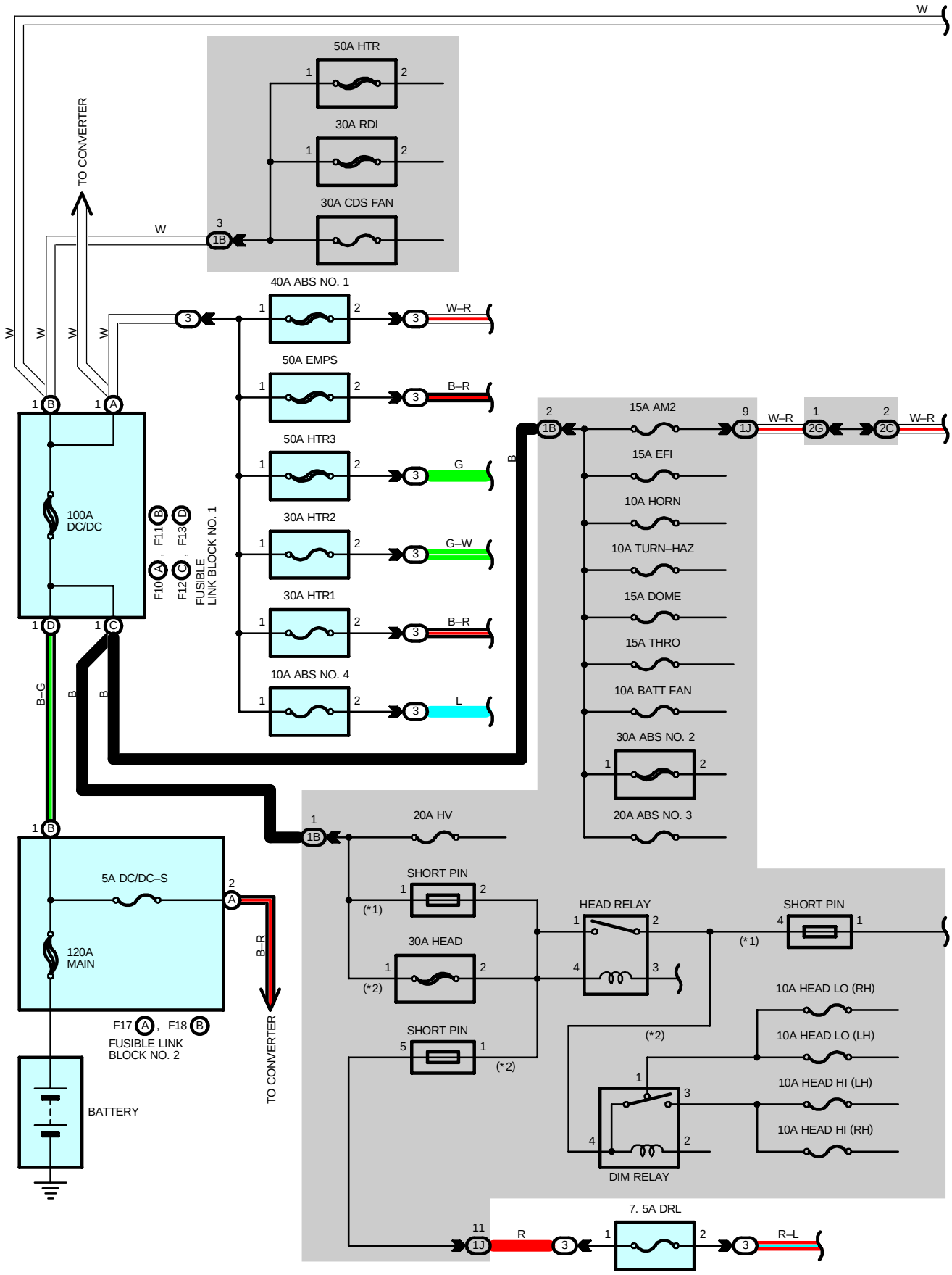

cardiagn.com

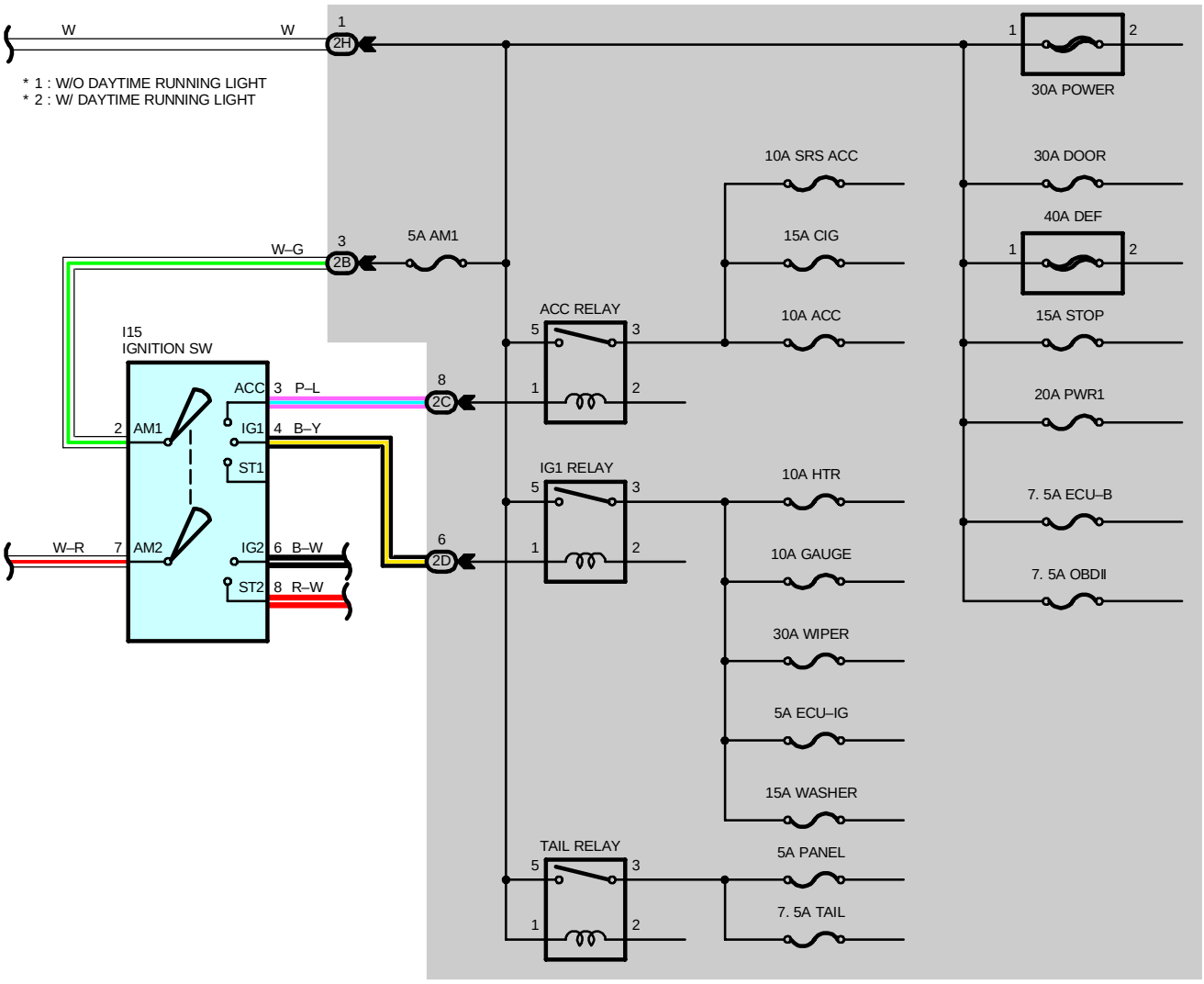

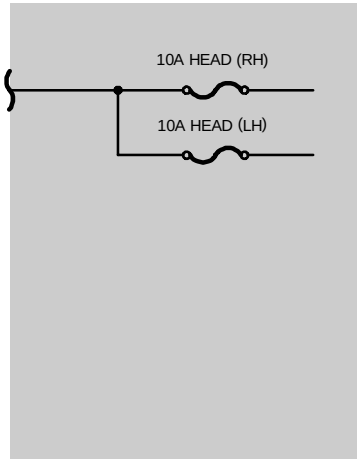

cardiagn.com

POWER SOURCE

SERVICE HINTS

HEAD RELAY

2–1 : Closed with the light control SW at **HEAD** position or the dimmer SW at **FLASH** position
Closed with the engine running and the parking brake pedal released (Parking brake SW off) [w/ Daytime running light]

TAIL RELAY

5–3 : Closed with the light control SW at **TAIL** or **HEAD** position

I15 IGNITION SW

2–3 : Closed with the ignition key at **ACC** or **ON** position
2–4 : Closed with the ignition key at **ON** or **ST** position
7–6 : Closed with the ignition key at **ON** or **ST** position
7–8 : Closed with the ignition key at **ST** position

: PARTS LOCATION

Code		See Page	Code		See Page	Code	See Page
F10	A	34	F13	D	34	I15	37
F11	B	34	F17	A	38		
F12	C	34	F18	B	38		

: RELAY BLOCKS

Code	See Page	Relay Blocks (Relay Block Location)
3	24	Engine Room R/B No.3 (Engine Compartment Right)

: JUNCTION BLOCK AND WIRE HARNESS CONNECTOR

Code	See Page	Junction Block and Wire Harness (Connector Location)
1B	27	Engine Room Main Wire and Engine Room J/B (Engine Compartment Left)
1J		
2B	30	Instrument Panel Wire and Instrument Panel J/B (Cowl Side Panel LH)
2C		
2D		
2G	31	Engine Room Main Wire and Instrument Panel J/B (Cowl Side Panel LH)
2H		

cardiagn.com

cardiagn.com

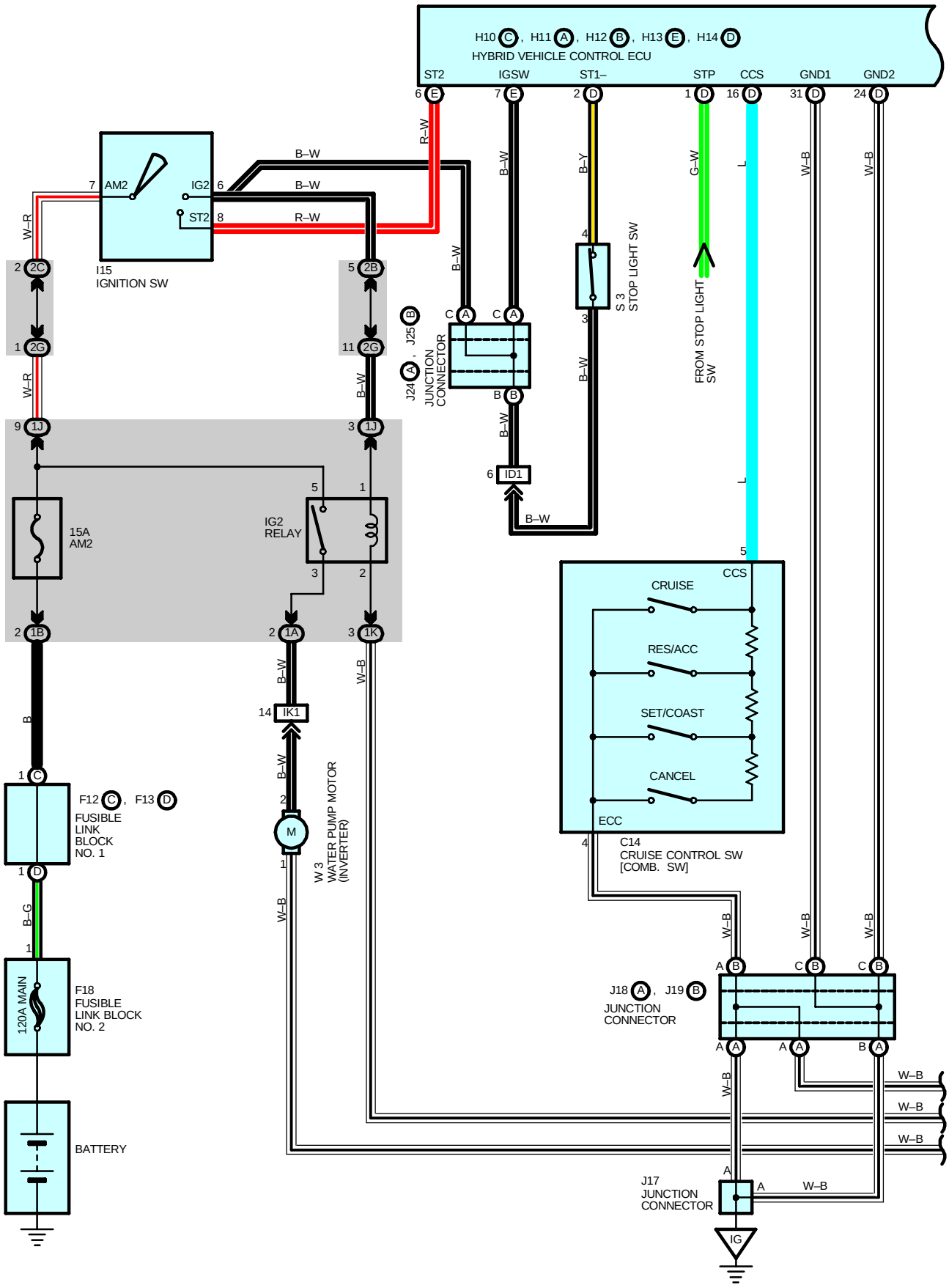

cardiagn.com

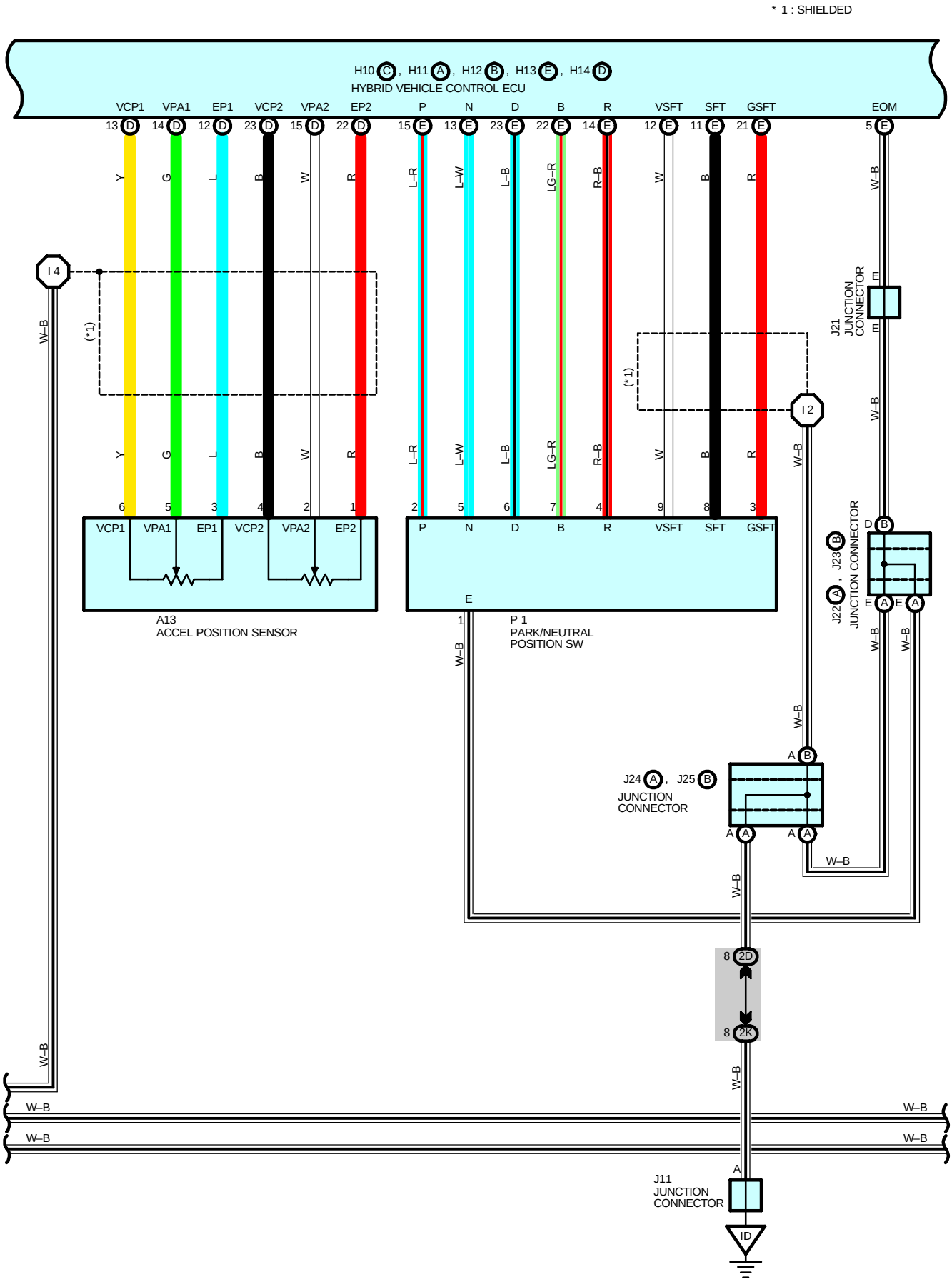

cardiagn.com

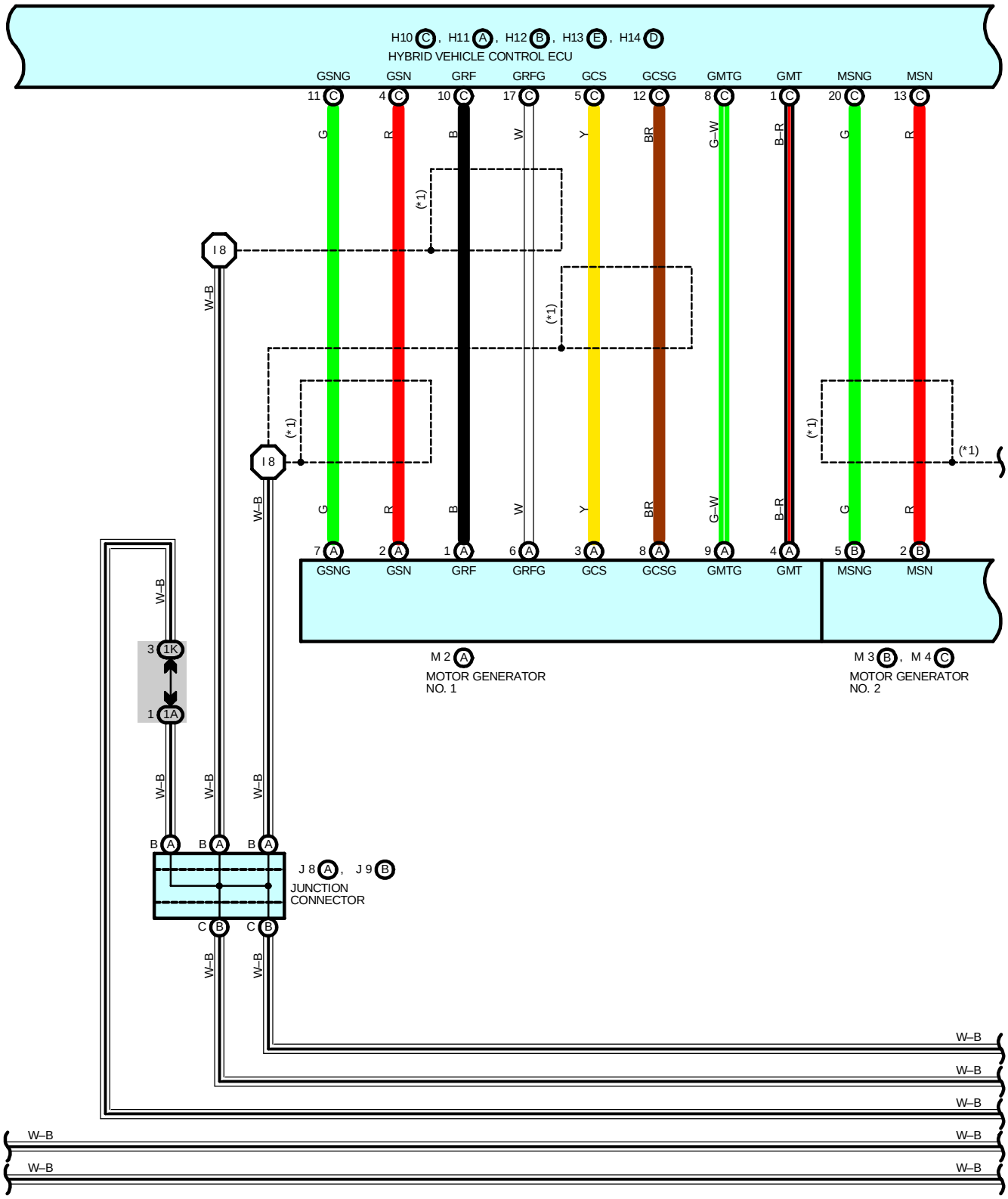

cardiagn.com

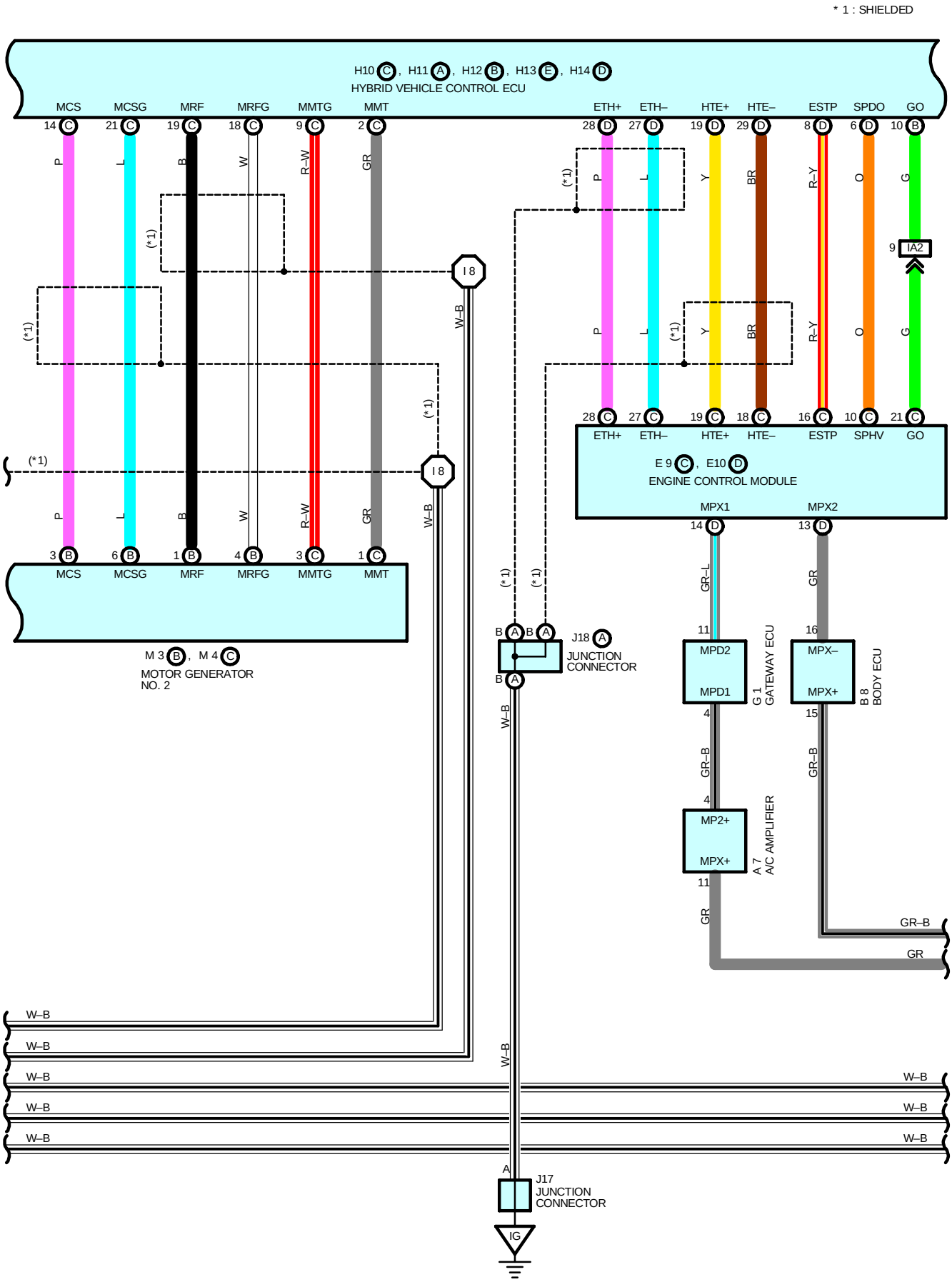

cardiagn.com

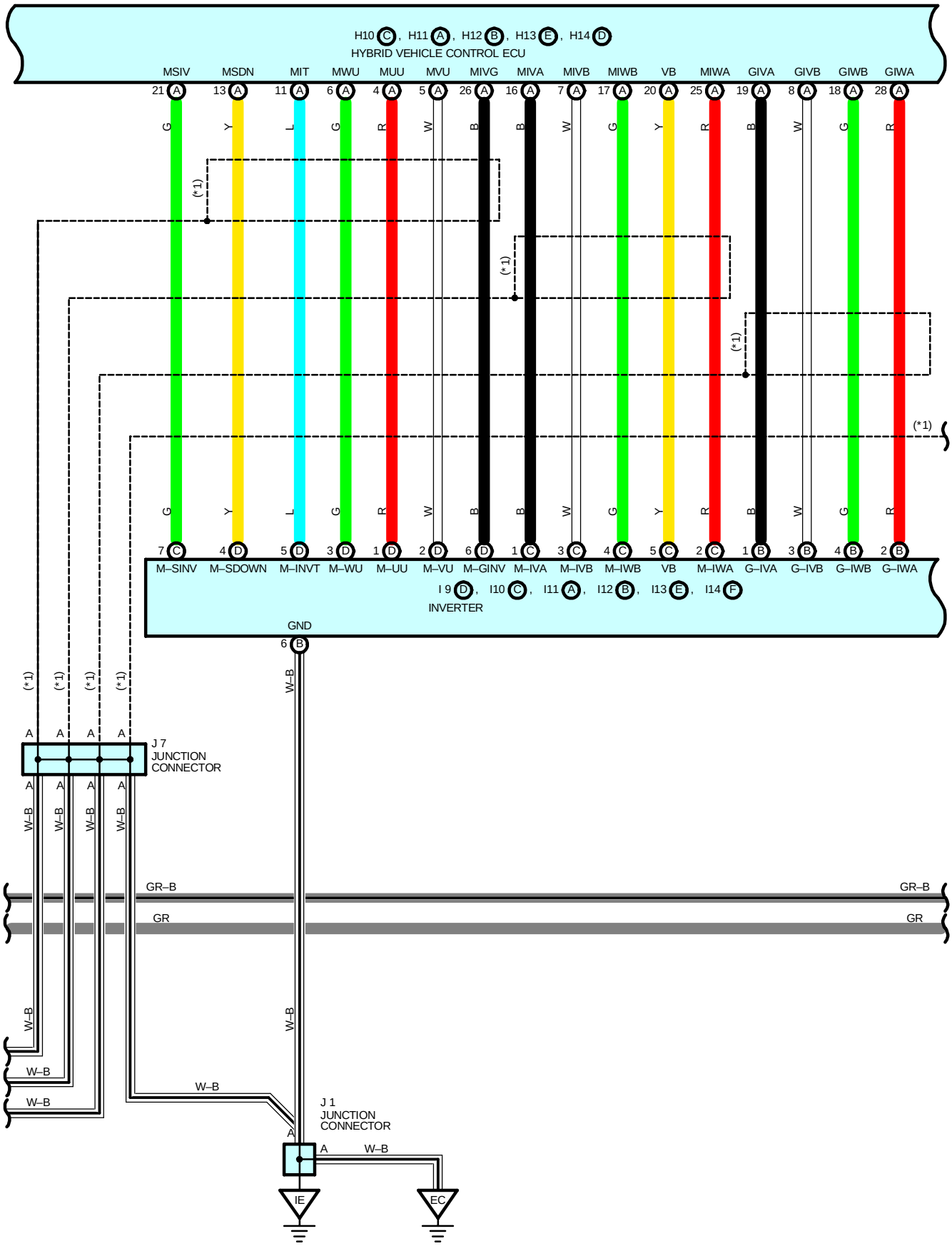

cardiagn.com

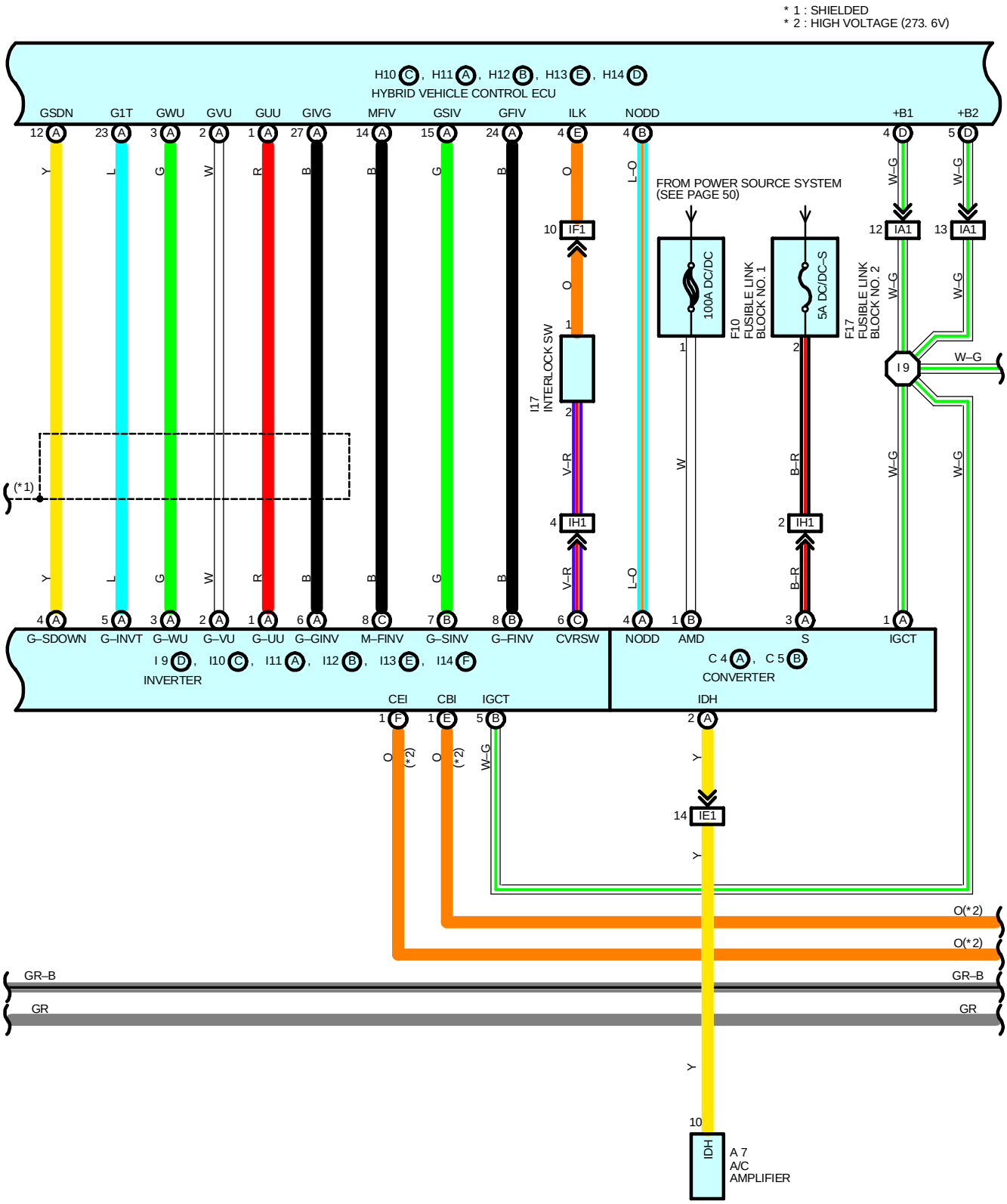

cardiagn.com

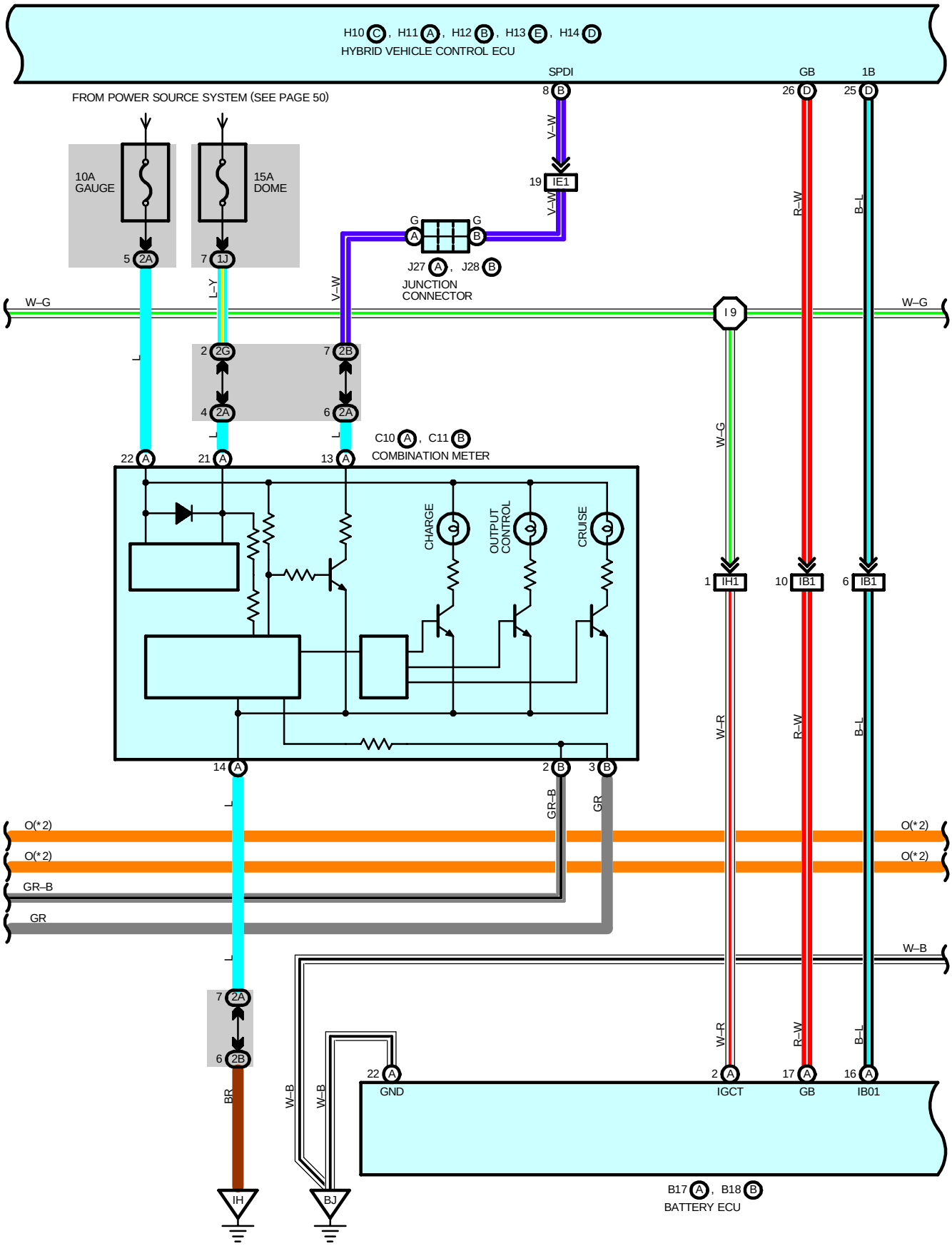

cardiagn.com

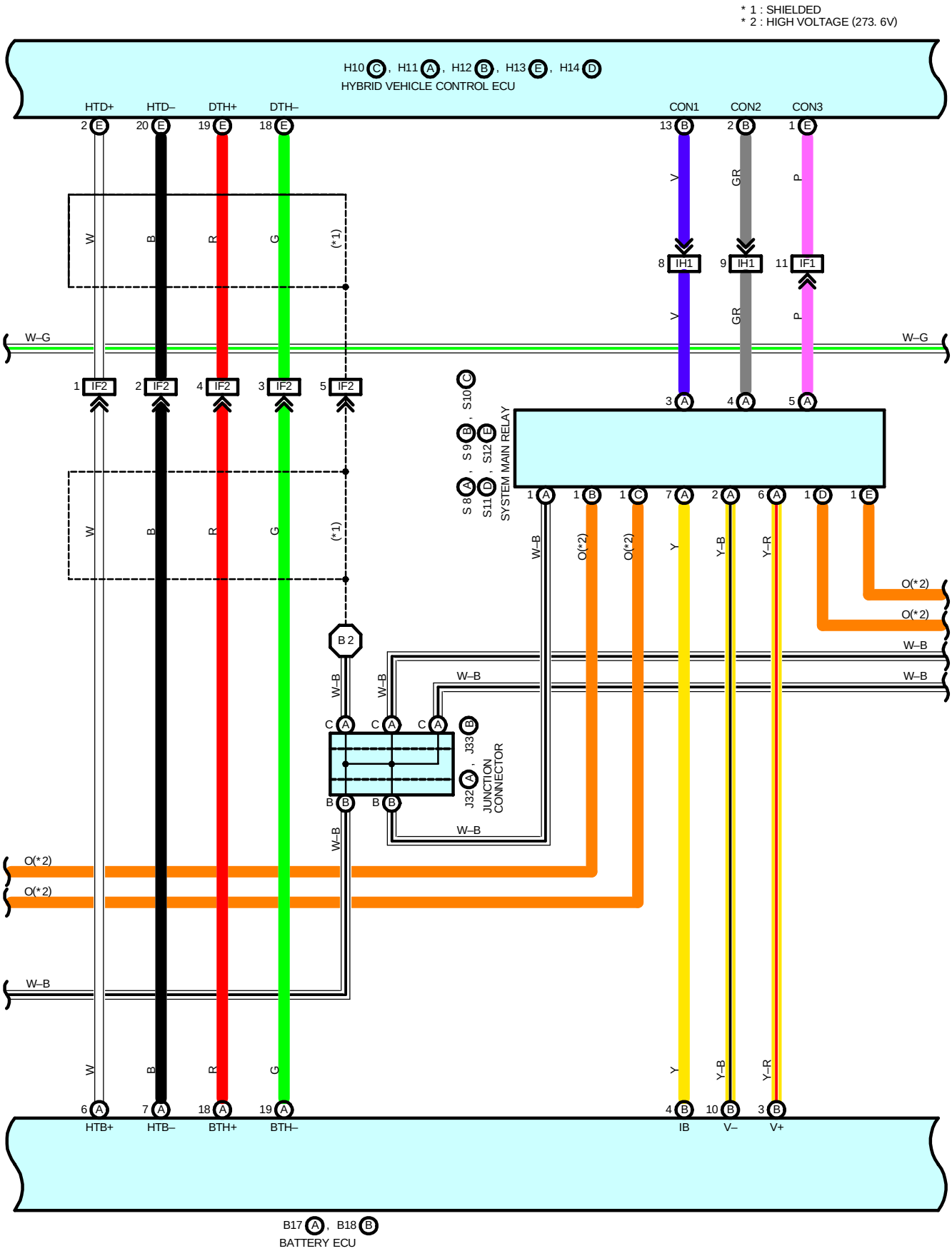

cardiagn.com

TOYOTA HYBRID SYSTEM

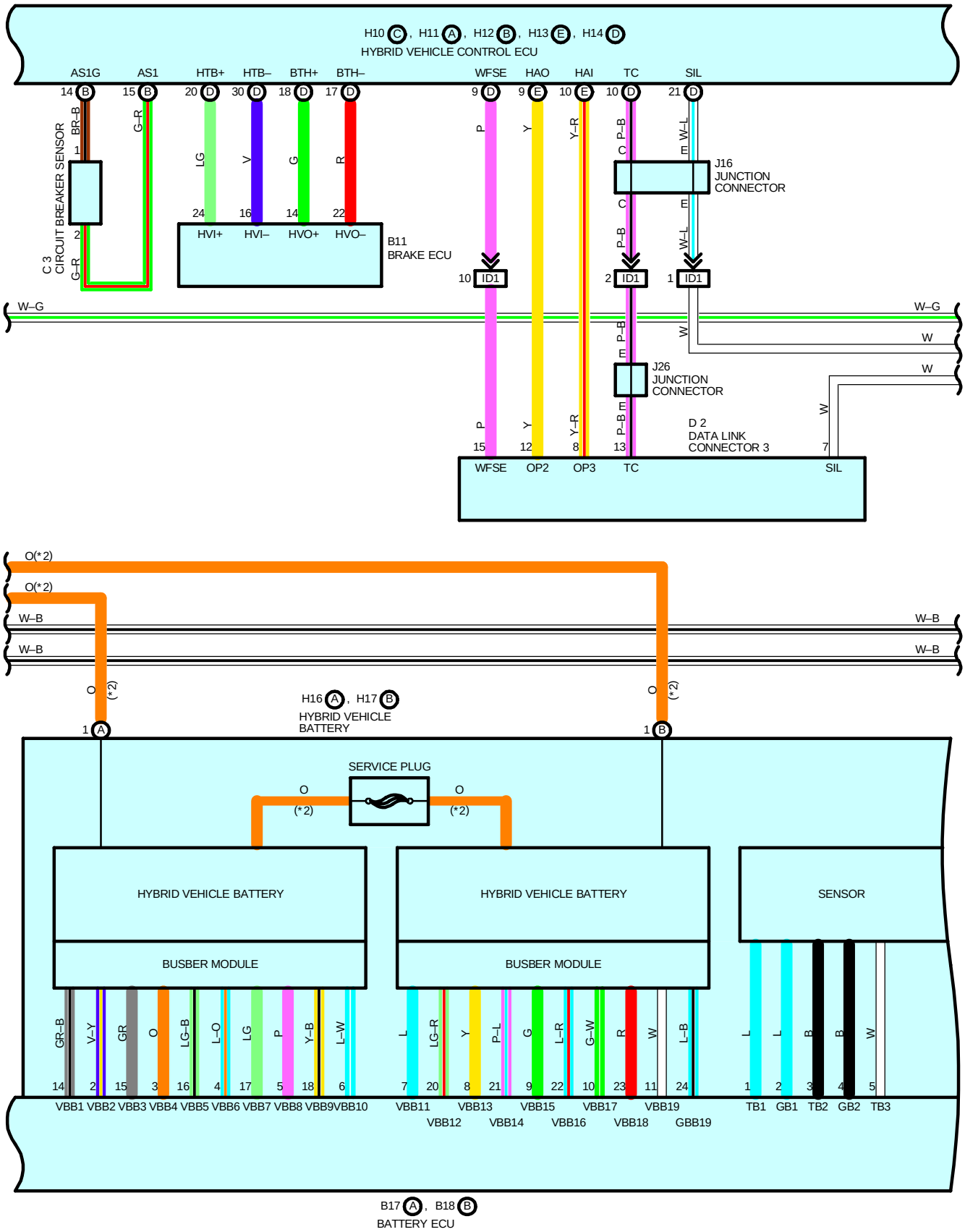

cardiagn.com

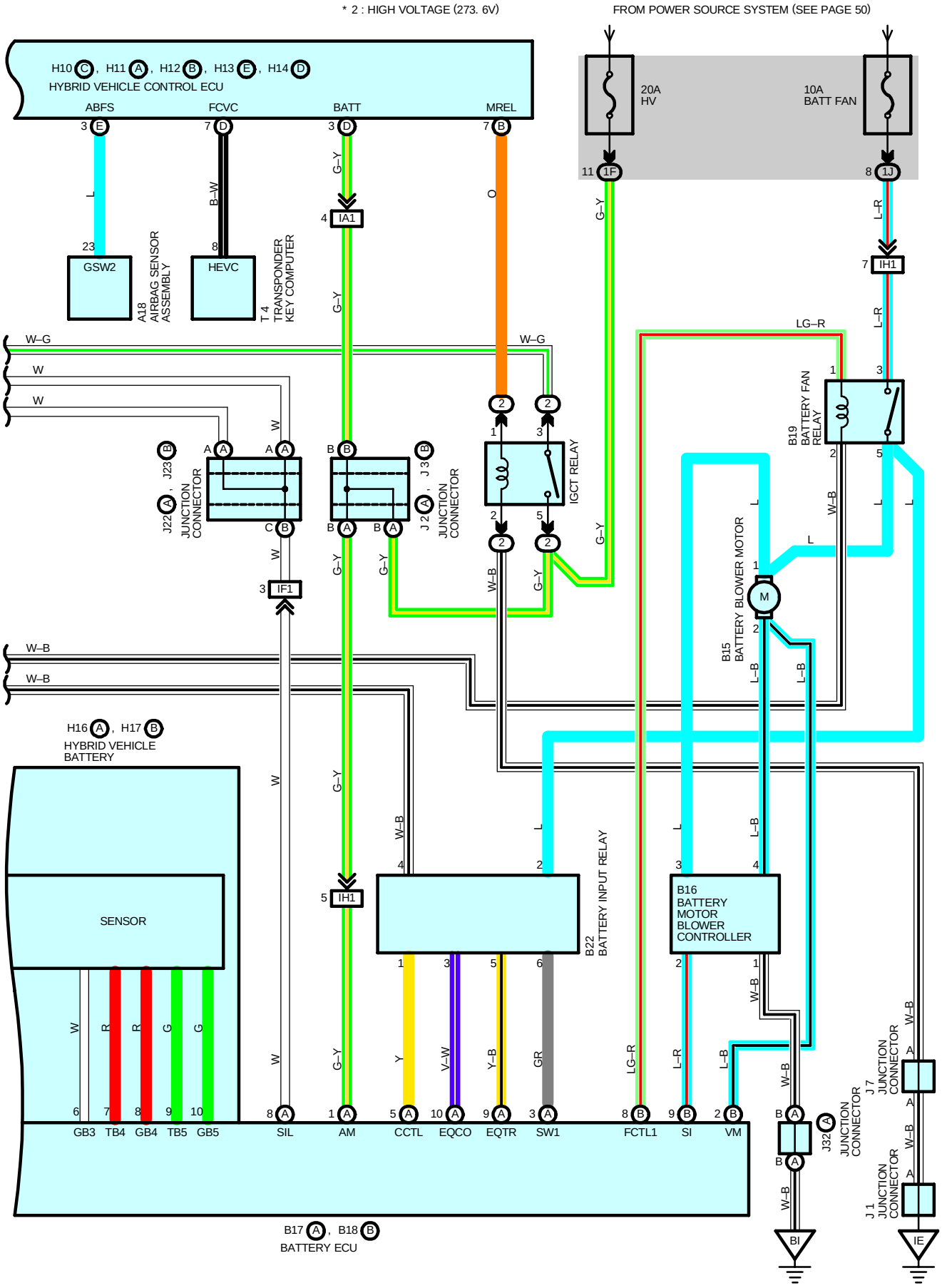

cardiagn.com

SYSTEM OUTLINE

FEATURES OF TOYOTA HYBRID SYSTEM

This system controls the following modes in order to achieve the most efficient operations to match the driving conditions.

(1) Supply of electrical power from the HV battery to motor generator no.2 provides force to drive the wheels.

(2) While the tires are driven by the engine via the planetary gears, motor generator no.1 is driven via the planetary gears to supply electricity to motor generator no.2 to drive the wheels.

(3) When the vehicle is decelerating, kinetic energy from the wheels is recovered and converted into electrical energy and used to recharge the HV battery by means of motor generator no.2.

The hybrid vehicle control ECU switches between these modes (1, 2, 1+2, or 3) according to the driving conditions. However, when the state of charge of the HV battery is low, the HV battery is charged by the engine by turning motor generator no.1.

CRUISE CONTROL OPERATION

Cruise control is the speed control device, which sets the desired speed by just operating the switch on the control panel without pressing the accelerator pedal. This device is used when you would like to drive the vehicle at the fixed speed.

1. SET CONTROL

If you operate the SET/COAST switch when driving (The available range of set speed: between about 40 and 200 km/h) with the main switch is ON (When power indicator comes on), the device memorizes vehicle's speed when switch is off and controls the fixed speed.

2. SET SPEED CONTROL

This device compares the vehicle's running speed and the memorized speed, and controls the driving power of the motor and the engine by calculating the cruise control requirements so that both speed become equivalent.

3. COAST CONTROL

If the SET/COAST switch is continued to be ON during the running with the cruise control, the device recognizes the cruise control requirement is at 0 and decelerates the vehicle's speed. Then the device memorizes the speed when the switch is off in order to control the fixed speed.

In each time you operate SET/COAST switch momentarily (For about 0.5 second), the memorized speed is decreased in about 1.5 km/h. However, in case of the tap–down operation with more than 5–km/h gap between the memorized speed and vehicle's running speed, the device memorizes the vehicle's speed when the switch is off and controls the fixed speed.

4. ACCEL CONTROL

If the RESUME/ACCEL switch is continued to be ON during the running with the cruise control, the device recognizes the cruise control is on the acceleration side and accelerates the vehicle's speed. Then the running speed when the switch is off is memorized to control the fixed speed.

In each time you operate RESUME/ACCEL switch momentarily (For about 0.5 second), the memorized speed is increased in about 1.5 km/h. However, if there is more than 5–km/h gap between the memorized speed and vehicle's running speed, this operation does not change the memorized speed. (Tap–up operation is not available.)

5. RESUME CONTROL

If the running speed is faster than the low speed limit after the cruise control is canceled manually, the fixed speed is controlled by the OFF–ON operation of RESUME/ACCEL switch, so that the vehicle's speed returns to the memorized speed at the time the cruise control is released.

cardiagn.com

6. MANUAL CANCEL CONTROL

When each of the following signals is input during driving with cruise control, the cruise control is released with turning the cruise control requirement to 0. (The memorized speed is maintained when following signals except the signal, main switch OFF is input.)

∗ Stop light switch ON (Pressing the brake pedal)
∗ Control switch's cancel switch ON
∗ Main switch OFF

7. AUTO CANCEL FUNCTION

A) The memorized speed is erased and the control is canceled if the following conditions occur. The power indicator blinks at that time until the main switch is turned ON. The speed control is unavailable unless the main switch is turned ON again.

∗ When the stop light switch breaks or short–circuits.
∗ When sudden change of the running speed signal occur.

B) The memorized speed is erased and the control is canceled if the following conditions occur.

∗ When the malfunction of the stop light switch input circuit occurs.
∗ When the running speed becomes slower than 40km/h.
∗ When the running speed becomes slower than the speed that 16 km/h subtracted from the memorized speed.

8. REGENERATIVE SYSTEM OPERATION

This system operates the motor as a generator to change the kinetic energy of the vehicle into the electricity when accel pedal release or foot braking controls the vehicle, and store the electricity in the battery.

SERVICE HINTS

C14 CRUISE CONTROL SW [COMB. SW]

5–4 : Approx. **1540** Ω with CANCEL SW on
Approx. **240** Ω with RES/ACC SW on
Approx. **630** Ω with SET/COAST SW on

○ : PARTS LOCATION

Code		See Page	Code		See Page	Code		See Page
A7		36	G1		37	J18	A	37
A13		36	H10	C	37	J19	B	37
A18		36	H11	A	37	J21		37
B8		36	H12	B	37	J22	A	37
B11		36	H13	E	37	J23	B	37
B15		38	H14	D	37	J24	A	37
B16		38	H16	A	38	J25	B	37
B17	A	38	H17	B	38	J26		37
B18	B	38	I9	D	35	J27	A	37
B19		38	I10	C	35	J28	B	37
B22		38	I11	A	35	J32	A	38
C3		34	I12	B	35	J33	B	38
C4	A	34	I13	E	35	M2	A	35
C5	B	34	I14	F	35	M3	B	35
C10	A	36	I15		37	M4	C	35
C11	B	36	I17		38	P1		37
C14		36	J1		37	S3		37
D2		36	J2	A	37	S8	A	39
E9	C	36	J3	B	37	S9	B	39
E10	D	36	J7		37	S10	C	39
F10		34	J8	A	37	S11	D	39
F12	D	34	J9	B	37	S12	E	39
F13	C	34	J11		37	T4		37
F17		38	J16		37	W3		35
F18		38	J17		37			

cardiagn.com

: RELAY BLOCKS

Code	See Page	Relay Blocks (Relay Block Location)
2	23	Engine Room R/B No.2 (Right Side of Reserve Tank)

: JUNCTION BLOCK AND WIRE HARNESS CONNECTOR

Code	See Page	Junction Block and Wire Harness (Connector Location)
1A	27	Engine Wire and Engine Room J/B (Engine Compartment Left)
1B	27	Engine Room Main Wire and Engine Room J/B (Engine Compartment Left)
1F		
1J		
1K		
2A	30	Instrument Panel Wire and Instrument Panel J/B (Cowl Side Panel LH)
2B		
2C		
2D		
2G	31	Engine Room Main Wire and Instrument Panel J/B (Cowl Side Panel LH)
2K	31	Cowl Wire and Instrument Panel J/B (Cowl Side Panel LH)

: CONNECTOR JOINING WIRE HARNESS AND WIRE HARNESS

Code	See Page	Joining Wire Harness and Wire Harness (Connector Location)
IA1	42	Engine Room Main Wire and Cowl Wire (Cowl Side Panel LH)
IA2		
IB1	42	Floor Wire and Cowl Wire (Cowl Side Panel LH)
ID1	42	Instrument Panel Wire and Cowl Wire (Left Kick Panel)
IE1	42	Instrument Panel Wire and Engine Room Main Wire (Left Kick Panel)
IF1	42	Instrument Panel Wire and Floor Wire (Left Kick Panel)
IF2		
IH1	42	Floor Wire and Engine Room Main Wire (Left Kick Panel)
IK1	44	Engine Wire and Engine Room Main Wire (Right Kick Panel)

: GROUND POINTS

Code	See Page	Ground Points Location
EC	40	Engine Compartment Left
ID	42	Cowl Side Panel LH
IE		
IG	42	Cowl Side Panel RH
IH	42	Right Kick Panel
BI	46	Left Side of Rear Pillar
BJ	46	Right Side of Rear Pillar

: SPLICE POINTS

Code	See Page	Wire Harness with Splice Points	Code	See Page	Wire Harness with Splice Points
E5	40	Engine Room Main Wire	I8	44	Engine Wire
I2	44	Instrument Panel Wire	I9	44	Engine Room Main Wire
I4	44	Cowl Wire	B2	46	Floor Wire

cardiagn.com

cardiagn.com

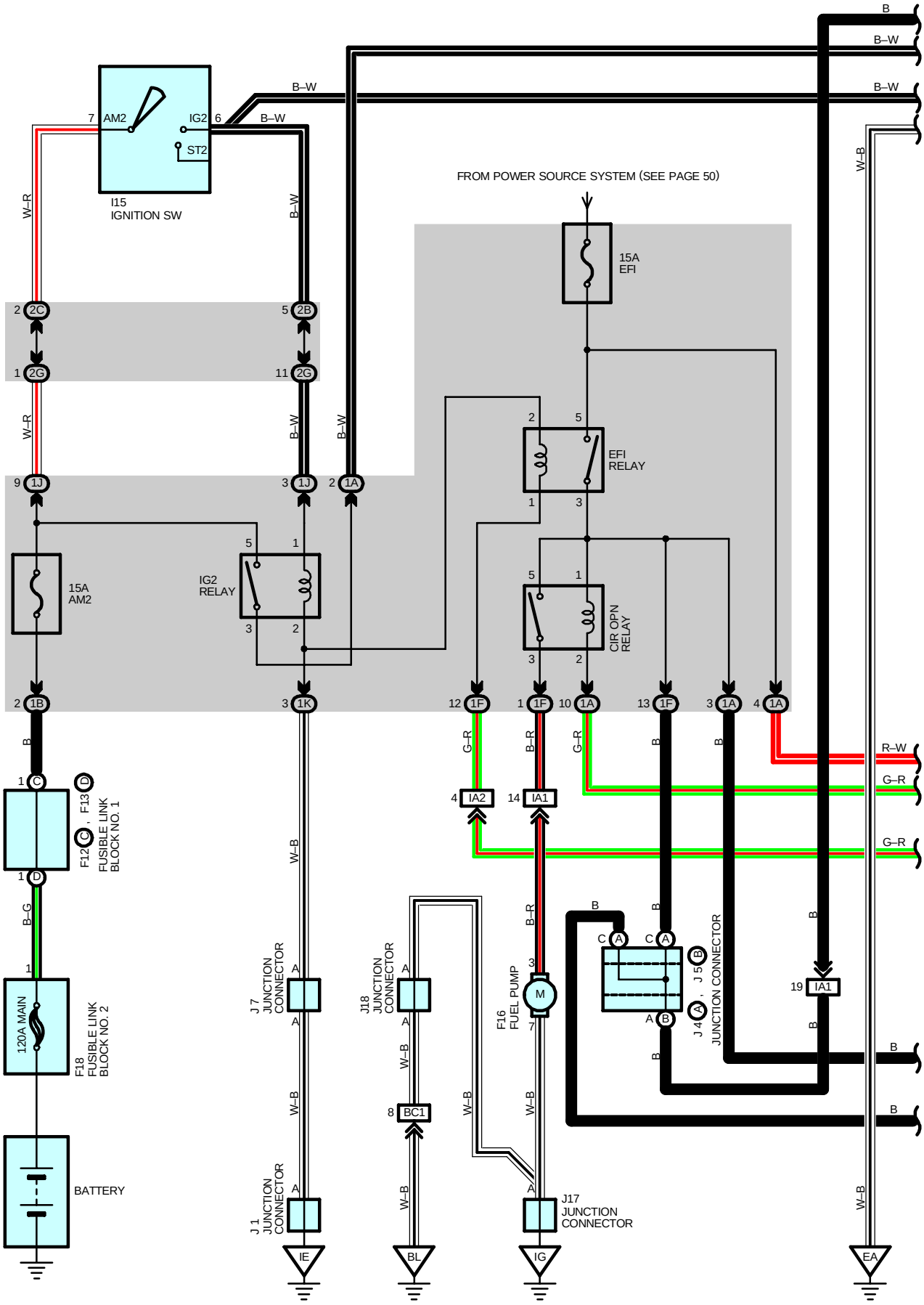

cardiagn.com

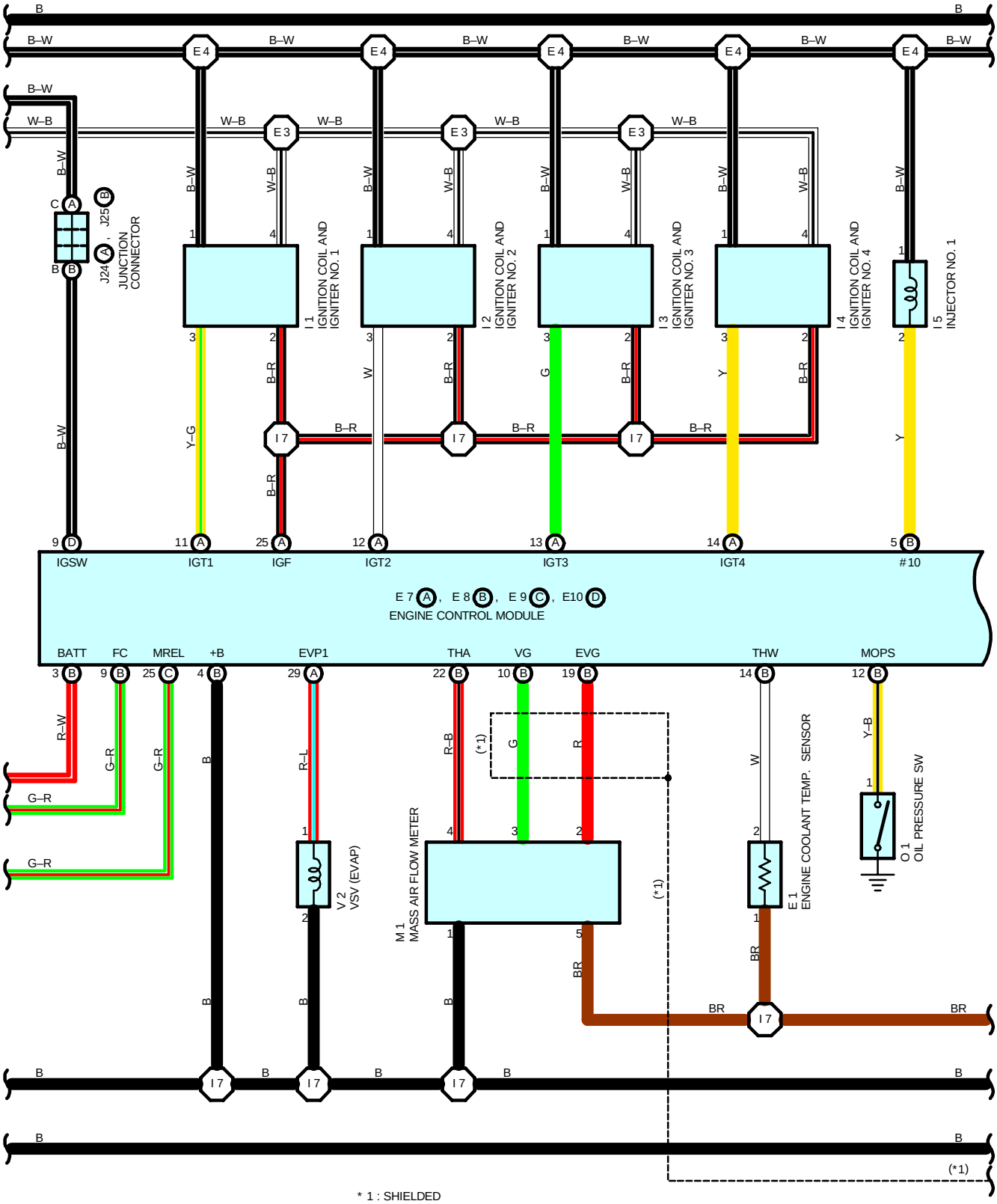

cardiagn.com

ENGINE CONTROL

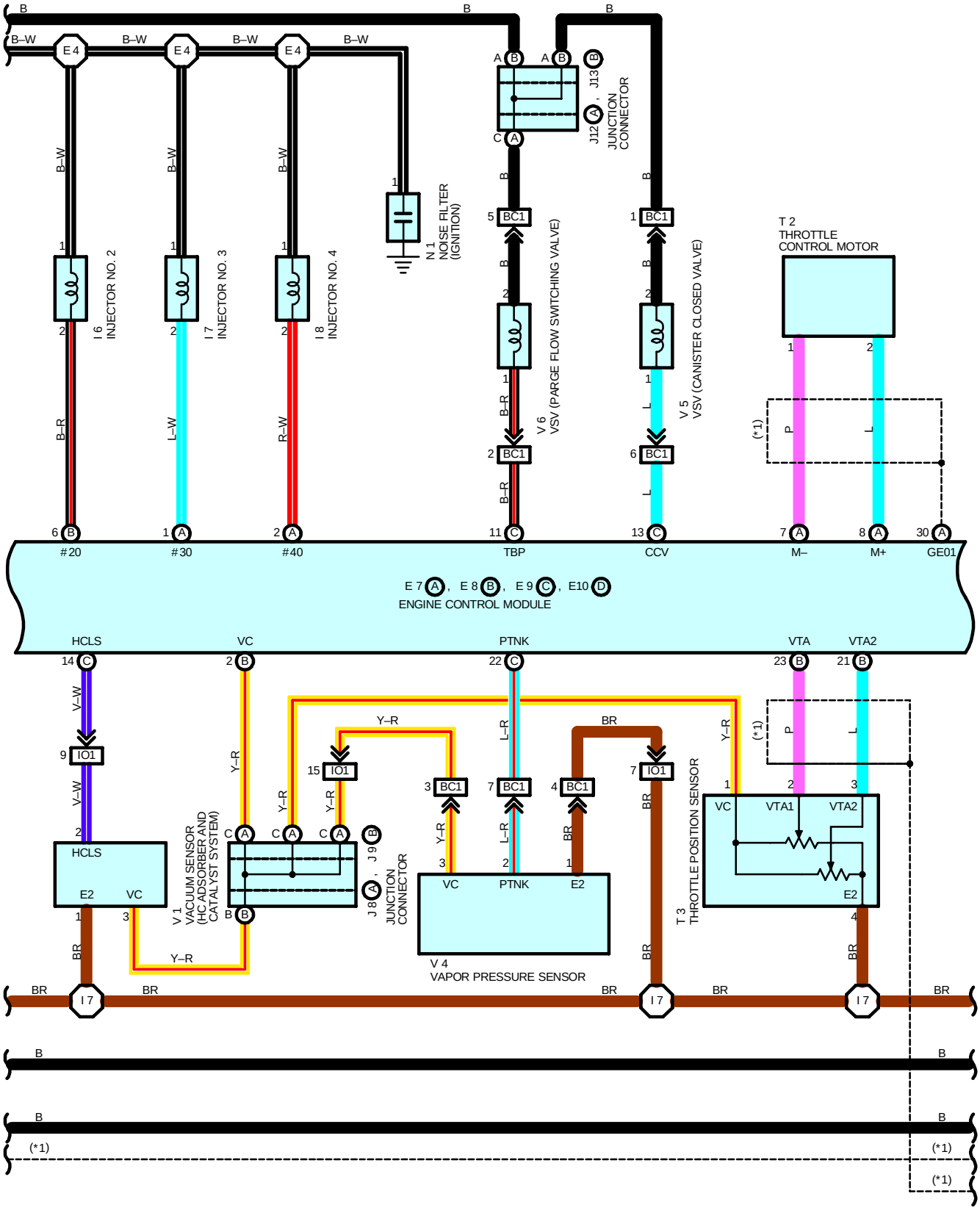

cardiagn.com

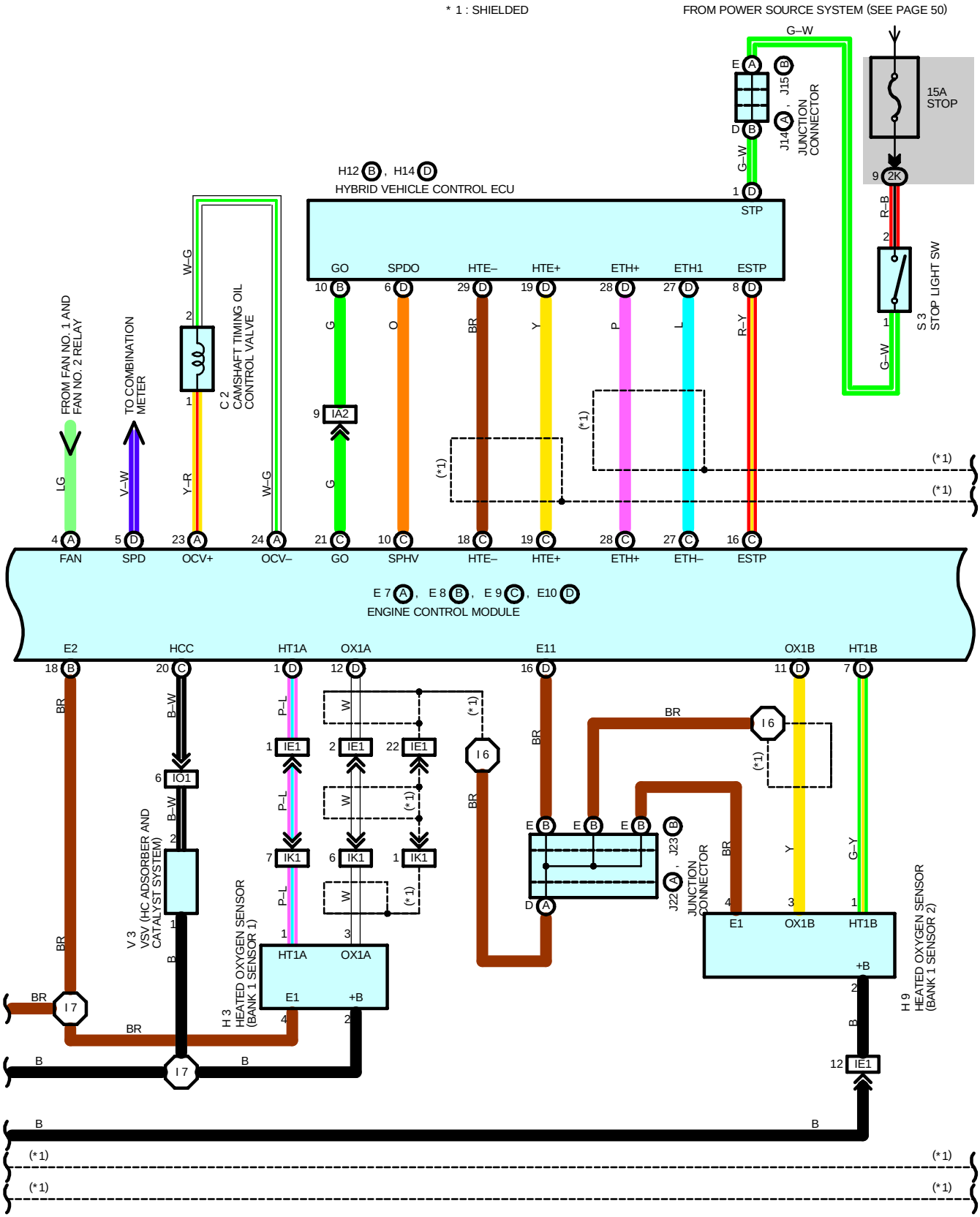

cardiagn.com

ENGINE CONTROL

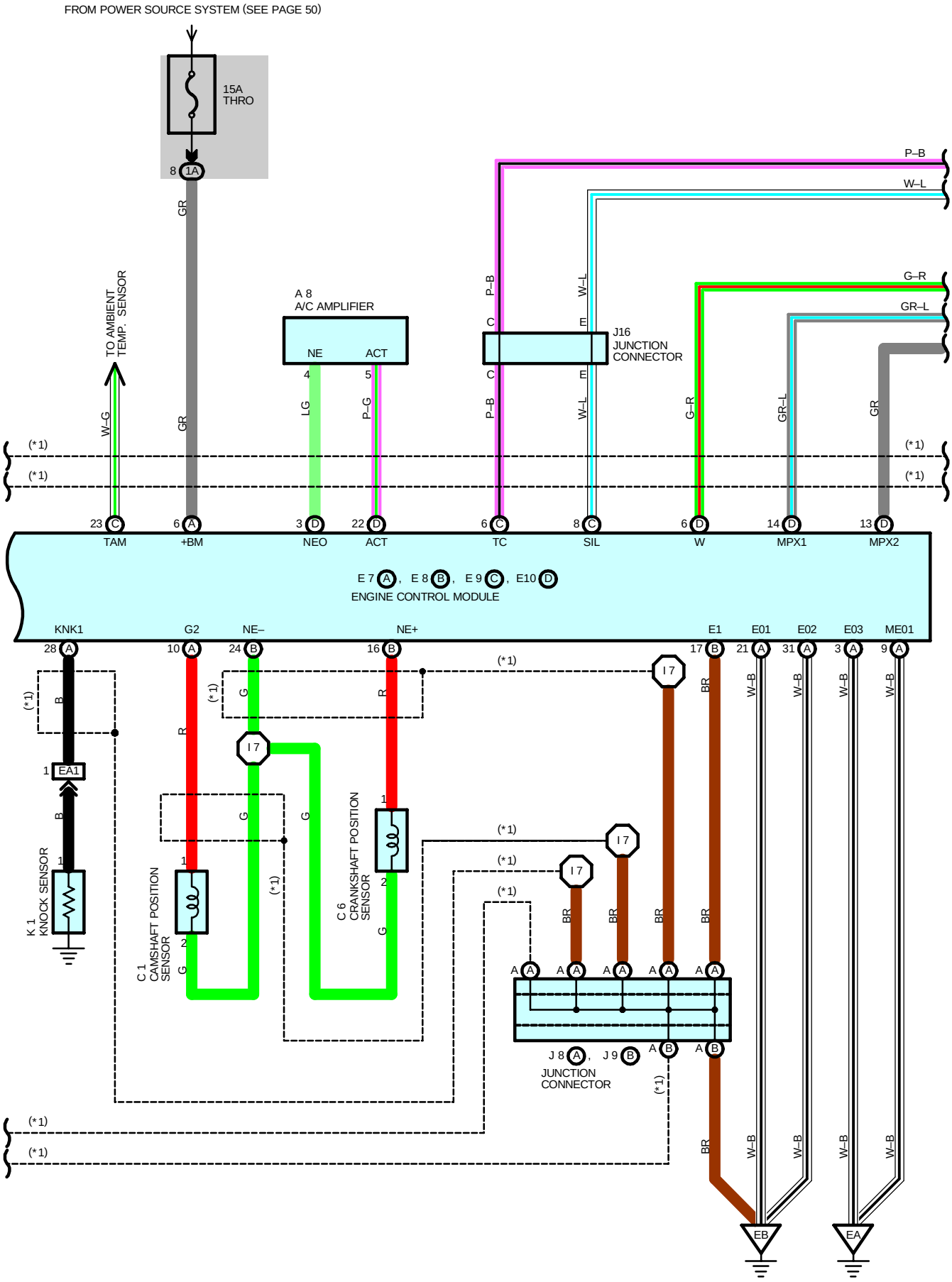

cardiagn.com

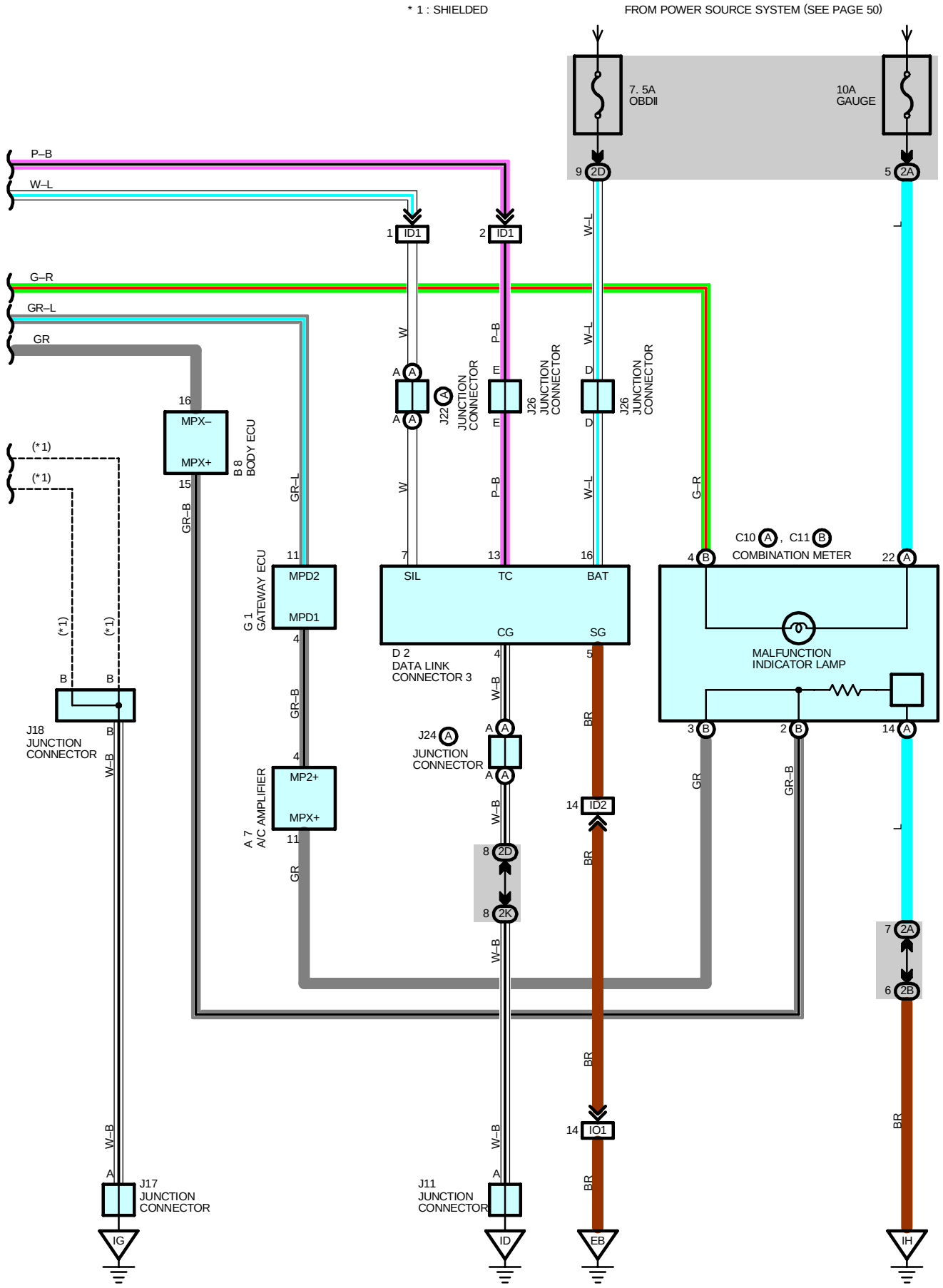

cardiagn.com

SYSTEM OUTLINE

This system utilizes an engine control module and maintains overall control of the engine, transmission and so on. An outline of the engine control is explained here.

1. INPUT SIGNALS

(1) Engine coolant temp. signal circuit
The engine coolant temp. sensor detects the engine coolant temp. and has a built–in thermistor with a resistance which varies according to the engine coolant temp. thus the engine coolant temp. is input in the form of a control signal into TERMINAL THW of the engine control module.

(2) Intake air temp. signal circuit
The intake air temp. sensor is installed in the mass air flow meter and detects the intake air temp., which is input as a control signal into TERMINAL THA of the engine control module.

(3) Oxygen sensor signal circuit
The oxygen density in the exhaust gases is detected and input as a control signal into TERMINALS OX1A and OX1B of the engine control module.

(4) RPM signal circuit
Camshaft position and crankshaft position are detected by the camshaft position sensor and crankshaft position sensor. Camshaft position is input as a control signal to TERMINAL G2 of the engine control module, and engine RPM is input into TERMINAL NE+.

(5) Throttle signal circuit
The throttle position sensor detects the throttle valve opening angle, which is input as a control signal into TERMINALS VTA and VTA2 of the engine control module.

(6) Vehicle speed signal circuit
The vehicle speed signal from combination meter, detects the vehicle speed and inputs a control signal into TERMINAL SPD of the engine control module via the combination meter.

(7) Battery signal circuit
Voltage is constantly applied to TERMINAL BATT of the engine control module. When the ignition SW is turned on, the voltage for engine control module start–up power supply is applied to TERMINAL +B of the engine control module via EFI relay.

(8) Engine knock signal circuit
Engine knocking is detected by knock sensor and the signal is input into TERMINAL KNK1 of the engine control module as a control signal.

2. CONTROL SYSTEM

∗ SFI system
The SFI system monitors the engine condition through the signals, which are input from each sensor to the engine control module. The best fuel injection volume is decided based on this data and the program memorized by the engine control module, and the control signal is output to TERMINALS #10, #20, #30 and #40 of the engine control module to operate the injector. (Inject the fuel). The SFI system produces control of fuel injection operation by the engine control module in response to the driving conditions.

∗ ESA system
The ESA system monitors the engine condition through the signals, which are input to the engine control module from each sensor. The best ignition timing is detected according to this data and the memorized data in the engine control module, and the control signal is output to TERMINALS IGT1, IGT2, IGT3 and IGT4. This signal controls the ignition coil and igniter to provide the best ignition timing for the driving conditions.

∗ Fuel pump control system
The engine control module operation outputs to TERMINAL FC and controls the CIR OPN relay. Thus controls the fuel pump drive speed in response to conditions.

3. DIAGNOSIS SYSTEM

With the diagnosis system, when there is a malfunctioning in the engine control module signal system, the malfunction system is recorded in the memory. The malfunctioning system can then be found by reading the display (Code) of the malfunction indicator lamp.

4. FAIL–SAFE SYSTEM

When a malfunction occurs in any system, if there is a possibility of engine trouble being caused by continued control based on the signals from that system, the fail–safe system either controls the system by using data (Standard values) recorded in the engine control module memory or else stops the engine.

cardiagn.com

SERVICE HINTS

E7 (A), E8 (B), E9 (C), E10 (D) ENGINE CONTROL MODULE

BATT–E1 : Always approx. **9**–**14** volts
+B–E1 : **9**–**14** volts with the ignition SW on and the engine stopping
VC–E2 : **4.5**–**5.5** volts with the ignition SW on and the engine stopping
IGF–E1 : Pulse generation with the engine idling
THA–E2 : **0.5**–**3.4** volts with the engine idling and the intake air temp. **20**˚C (**68**˚F)
THW–E2 : **0.2**–**1.0** volts with the engine idling and the engine coolant temp. **80**˚C (**176**˚F)
W–E1 : **9**–**14** volts with the engine idling
: **0**–**3** volts with the ignition SW on and the engine coolant temp. sensor connector disconnects
ESTP–E1 : **9**–**14** volts with the brake pedal depressed
FC–E01 : **9**–**14** volts with the ignition SW on and the engine stopping
: **0**–**3** volts with the engine idling
+BM–E1 : Always approx. **9**–**14** volts
MREL–E1 : **9**–**14** volts with the ignition SW on and the engine stopping
EVP1–E1 : **9**–**14** volts with the ignition SW on and the engine stopping
HT1A, HT1B : **9**–**14** volts with the ignition SW on and the engine stopping
TC–E1 : **9**–**14** volts with the ignition SW on and the engine stopping
KNK1–E2 : Pulse generation with the engine idling
NE+, G2–NE– : Pulse generation with the engine idling
OCV+ –OCV– : Pulse generation with the ignition SW on and the engine stopping
IGT1, IGT2, IGT3, IGT4–E1 : Pulse generation with the engine idling
#10, #20, #30, #40–E01 : Pulse generation with the engine idling
E01, E02, E03, E1, E2, ME01–GROUND : Always continuity

E1 ENGINE COOLANT TEMP. SENSOR

2–1 : Approx. **14.96** kΩ (**–20** ˚C, **–4** ˚F)
Approx. **2.44** kΩ (**20** ˚C, **68** ˚F)
Approx. **0.31** kΩ (**80** ˚C, **176** ˚F)
Approx. **0.14** kΩ (**110** ˚C, **230** ˚F)

○ : PARTS LOCATION

Code		See Page	Code		See Page	Code		See Page
A7		36	H14	D	37	J17		37
A8		36	I1		35	J18		37
B8		36	I2		35	J22	A	37
C1		34	I3		35	J23	B	37
C2		34	I4		35	J24	A	37
C6		34	I5		35	J25	B	37
C10	A	36	I6		35	J26		37
C11	B	36	I7		35	K1		35
D2		36	I8		35	M1		35
E1		34	I15		37	N1		35
E7	A	36	J1		37	O1		35
E8	B	36	J4	A	37	S3		37
E9	C	36	J5	B	37	T2		35
E10	D	36	J7		37	T3		35
F12	C	34	J8	A	37	V1		35
F13	D	34	J9	B	37	V2		35
F16		38	J11		37	V3		35
F18		38	J12	A	37	V4		39
G1		37	J13	B	37	V5		39
H3		34	J14	A	37	V6		39
H9		37	J15	B	37			
H12	B	37	J16		37			

cardiagn.com

ENGINE CONTROL

: JUNCTION BLOCK AND WIRE HARNESS CONNECTOR

Code	See Page	Junction Block and Wire Harness (Connector Location)
1A	27	Engine Wire and Engine Room J/B (Engine Compartment Left)
1B	27	Engine Room Main Wire and Engine Room J/B (Engine Compartment Left)
1F		
1J		
1K		
2A	30	Instrument Panel Wire and Instrument Panel J/B (Cowl Side Panel LH)
2B		
2C		
2D		
2G	31	Engine Room Main Wire and Instrument Panel J/B (Cowl Side Panel LH)
2K	31	Cowl Wire and Instrument Panel J/B (Cowl Side Panel LH)

: CONNECTOR JOINING WIRE HARNESS AND WIRE HARNESS

Code	See Page	Joining Wire Harness and Wire Harness (Connector Location)
EA1	40	Engine Wire and Engine No.4 Wire (Near the Radiator Fan)
IA1	42	Engine Room Main Wire and Cowl Wire (Cowl Side Panel LH)
IA2		
ID1	42	Instrument Panel Wire and Cowl Wire (Left Kick Panel)
ID2		
IE1	42	Instrument Panel Wire and Engine Room Main Wire (Left Kick Panel)
IK1	44	Engine Wire and Engine Room Main Wire (Right Kick Panel)
IO1	44	Engine Wire and Cowl Wire (Right Kick Panel)
BC1	46	Cowl Wire and Fuel Tank Wire (Near the Fuel Tank)

: GROUND POINTS

Code	See Page	Ground Points Location
EA	40	Engine Block
EB		
ID	42	Cowl Side Panel LH
IE		
IG	42	Cowl Side Panel RH
IH	42	Right Kick Panel
BL	46	Near the Fuel Tank

: SPLICE POINTS

Code	See Page	Wire Harness with Splice Points	Code	See Page	Wire Harness with Splice Points
E3	40	Engine Wire	I6	44	Instrument Panel Wire
E4			I7	44	Engine Wire

cardiagn.com

cardiagn.com

HYBRID VEHICLE IMMOBILISER SYSTEM

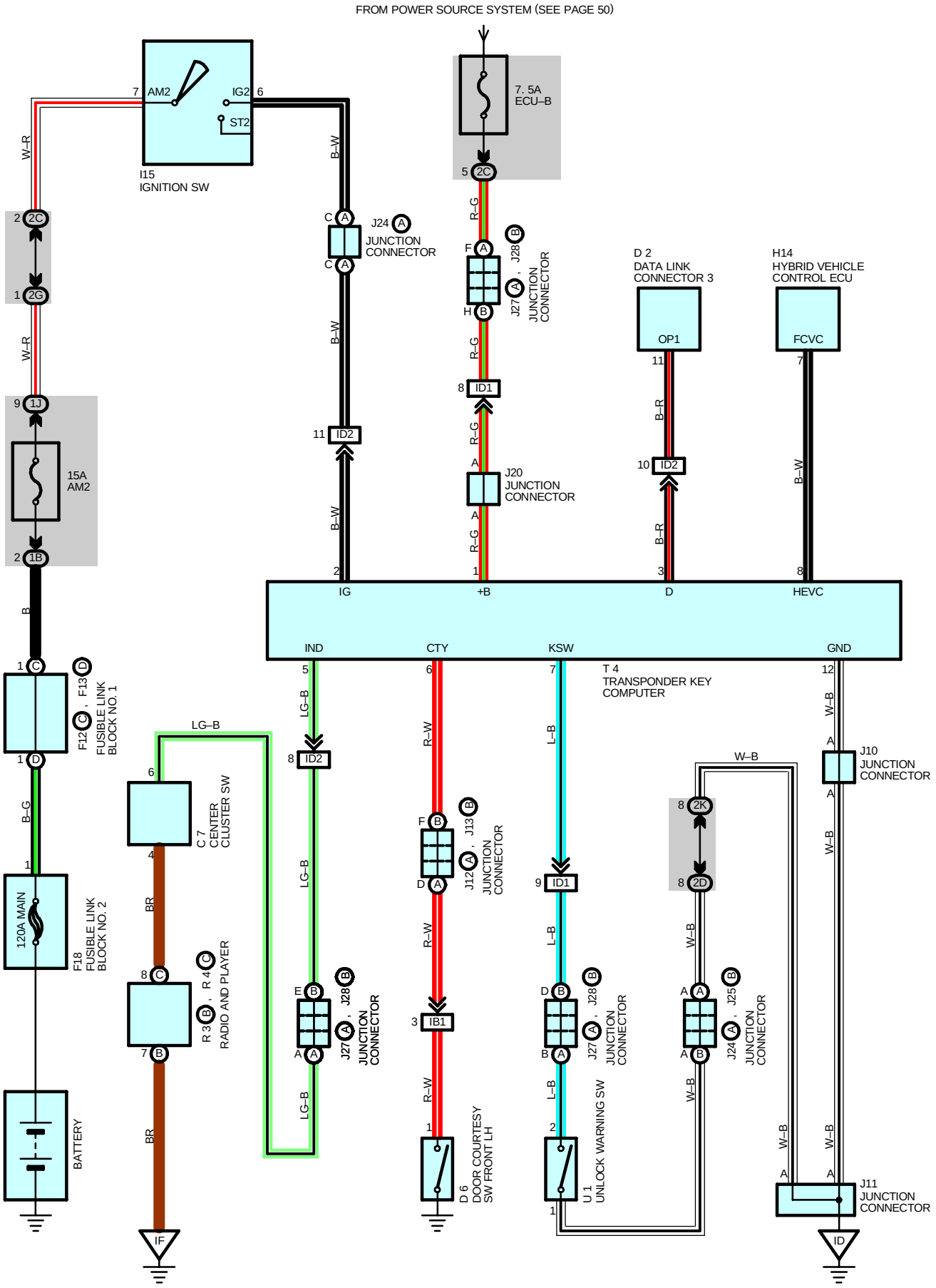

cardiagn.com

SERVICE HINTS

T4 TRANSPONDER KEY COMPUTER

1–GROUND : Always approx. **12** volts
12–GROUND : Always continuity

U1 UNLOCK WARNING SW

1–2 : Closed with the ignition key in cylinder

: PARTS LOCATION

Code		See Page	Code		See Page	Code		See Page
C7		36	I15		37	J25	B	37
D2		36	J10		37	J27	A	37
D6		38	J11		37	J28	B	37
F12	C	34	J12	A	37	R3	B	37
F13	D	34	J13	B	37	R4	C	37
F18		38	J20		37	T4		37
H14		37	J24	A	37	U1		37

: JUNCTION BLOCK AND WIRE HARNESS CONNECTOR

Code	See Page	Junction Block and Wire Harness (Connector Location)
1B	27	Engine Room Main Wire and Engine Room J/B (Engine Compartment Left)
1J		
2C	30	Instrument Panel Wire and Instrument Panel J/B (Cowl Side Panel LH)
2D		
2G	31	Engine Room Main Wire and Instrument Panel J/B (Cowl Side Panel LH)
2K	31	Cowl Wire and Instrument Panel J/B (Cowl Side Panel LH)

: CONNECTOR JOINING WIRE HARNESS AND WIRE HARNESS

Code	See Page	Joining Wire Harness and Wire Harness (Connector Location)
IB1	42	Floor Wire and Cowl Wire (Cowl Side Panel LH)
ID1	42	Instrument Panel Wire and Cowl Wire (Left Kick Panel)
ID2		

: GROUND POINTS

Code	See Page	Ground Points Location
ID	42	Cowl Side Panel LH
IF	42	Left Kick Panel

cardiagn.com

HEADLIGHT (w/ DAYTIME RUNNING LIGHT)

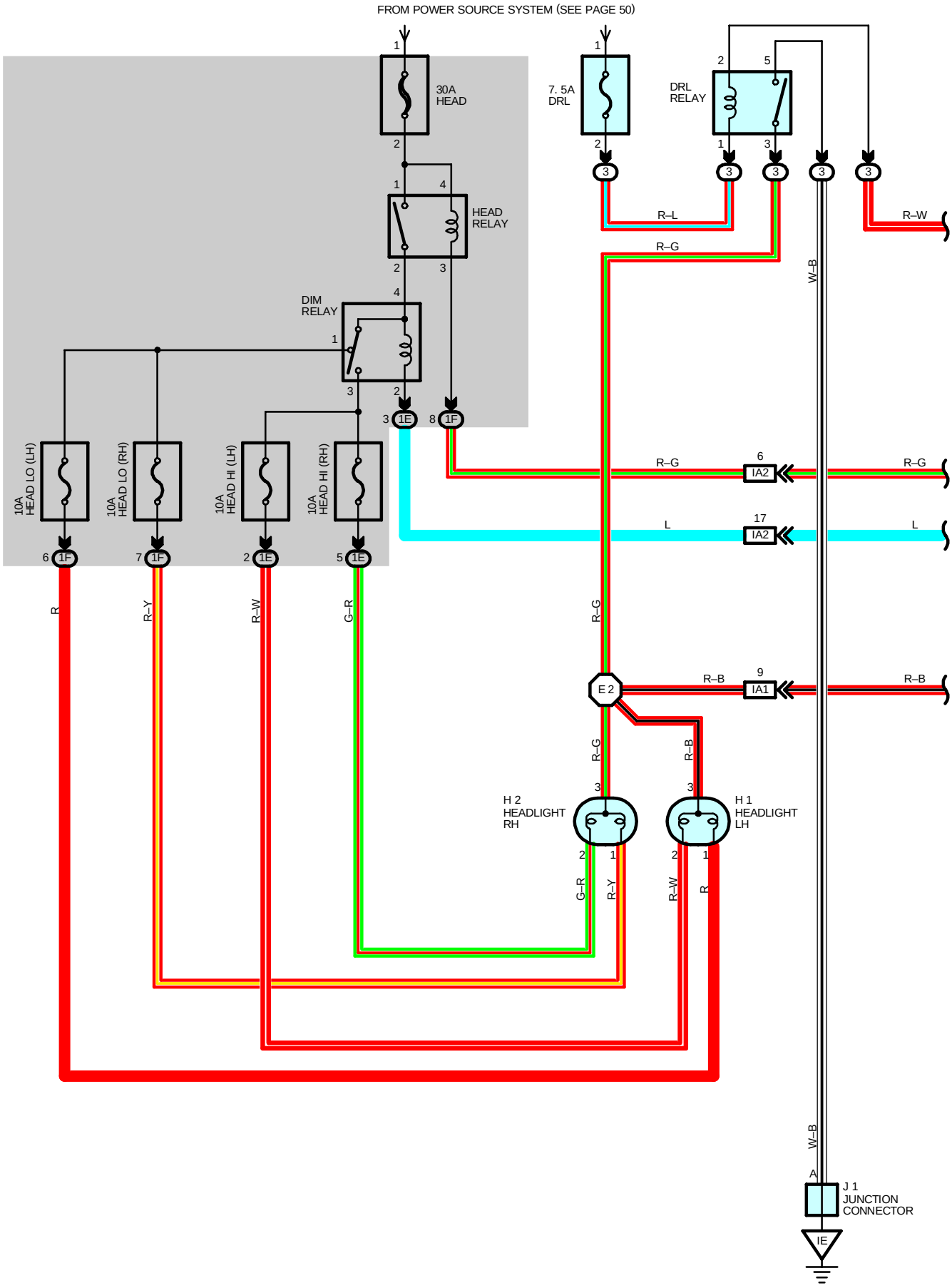

cardiagn.com

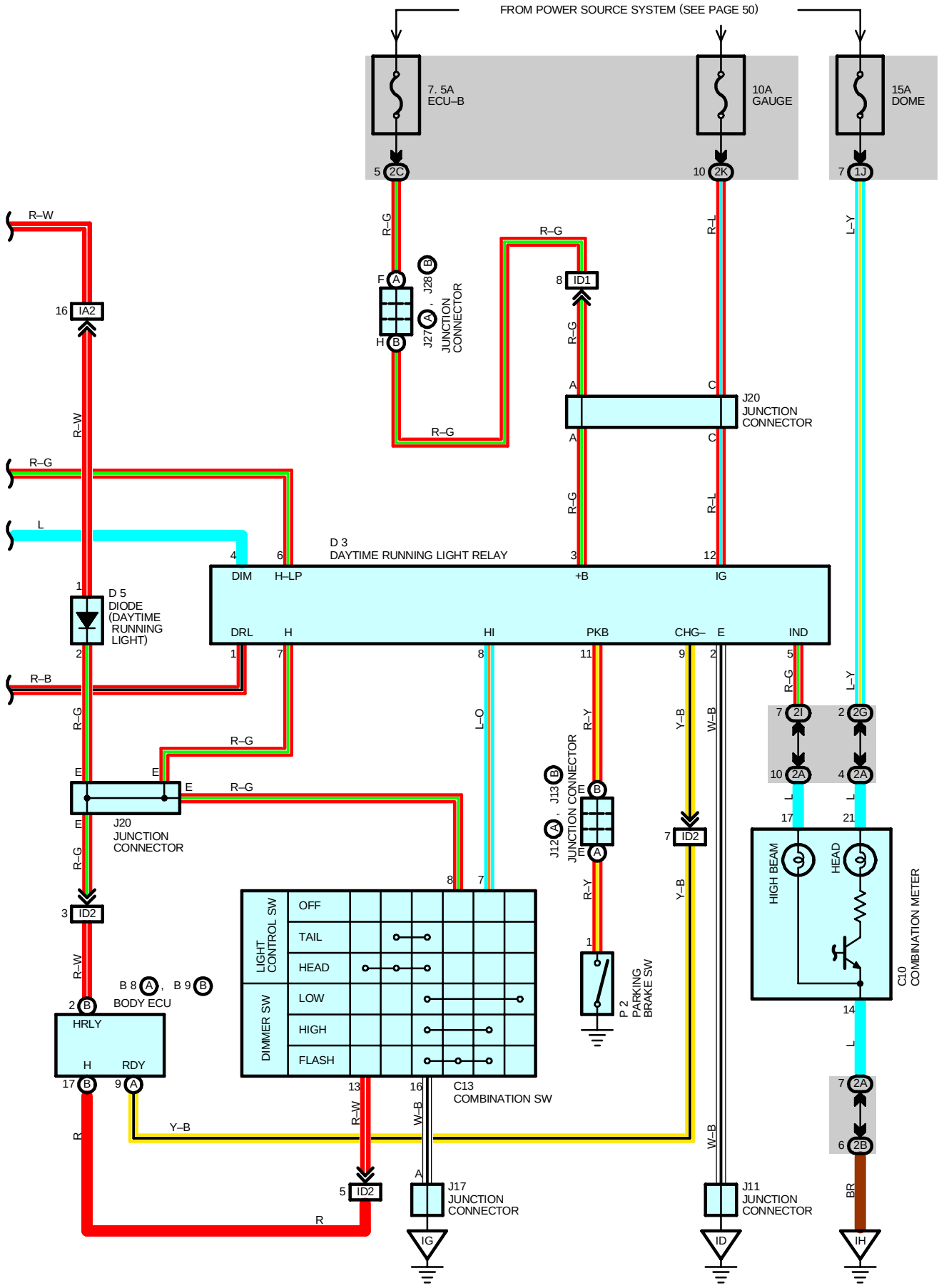

cardiagn.com

HEADLIGHT (w/ DAYTIME RUNNING LIGHT)

SYSTEM OUTLINE

When the ignition SW is turned on ST position and ”READY” signal from engine control module is sent to the daytime running light relay via body ECU. If the parking brake pedal is depressed (Parking brake SW is on) at that time, the daytime running light system does not operate. If the parking brake pedal is released (Parking brake SW is off), the daytime running light system operates and the low beam headlight comes on.

SERVICE HINTS

HEAD RELAY

1–2 : Closed with the light control SW at **HEAD** position or the dimmer SW at **FLASH** position
Closed with the engine running and the parking brake lever is released (Parking brake SW off)

D3 DAYTIME RUNNING LIGHT RELAY

12–GROUND : Approx. **12** volts with the ignition SW at **ON** position
3–GROUND : Always approx. **12** volts
11–GROUND : Continuity with the parking brake lever pulled up
2–GROUND : Always continuity
8–GROUND : Continuity with the dimmer SW at **HIGH** or **FLASH** position

: PARTS LOCATION

Code		See Page	Code		See Page	Code		See Page
B8	A	36	H1		34	J17		37
B9	B	36	H2		34	J20		37
C10		36	J1		37	J27	A	37
C13		36	J11		37	J28	B	37
D3		36	J12	A	37	P2		37
D5		36	J13	B	37			

: RELAY BLOCKS

Code	See Page	Relay Blocks (Relay Block Location)
3	24	Engine Room R/B No.3 (Engine Compartment Right)

: JUNCTION BLOCK AND WIRE HARNESS CONNECTOR

Code	See Page	Junction Block and Wire Harness (Connector Location)
1E	27	Engine Room Main Wire and Engine Room J/B (Engine Compartment Left)
1F		
1J		
2A	30	Instrument Panel Wire and Instrument Panel J/B (Cowl Side Panel LH)
2B		
2C		
2G	31	Engine Room Main Wire and Instrument Panel J/B (Cowl Side Panel LH)
2I	31	Cowl Wire and Instrument Panel J/B (Cowl Side Panel LH)
2K		

: CONNECTOR JOINING WIRE HARNESS AND WIRE HARNESS

Code	See Page	Joining Wire Harness and Wire Harness (Connector Location)
IA1	42	Engine Room Main Wire and Cowl Wire (Cowl Side Panel LH)
IA2		
ID1	42	Instrument Panel Wire and Cowl Wire (Left Kick Panel)
ID2		

: GROUND POINTS

Code	See Page	Ground Points Location
ID	42	Cowl Side Panel LH
IE		
IG	42	Cowl Side Panel RH
IH	42	Right Kick Panel

cardiagn.com

: SPLICE POINTS

Code	See Page	Wire Harness with Splice Points	Code	See Page	Wire Harness with Splice Points
E2	40	Engine Room Main Wire			

cardiagn.com

HEADLIGHT (w/o DAYTIME RUNNING LIGHT)

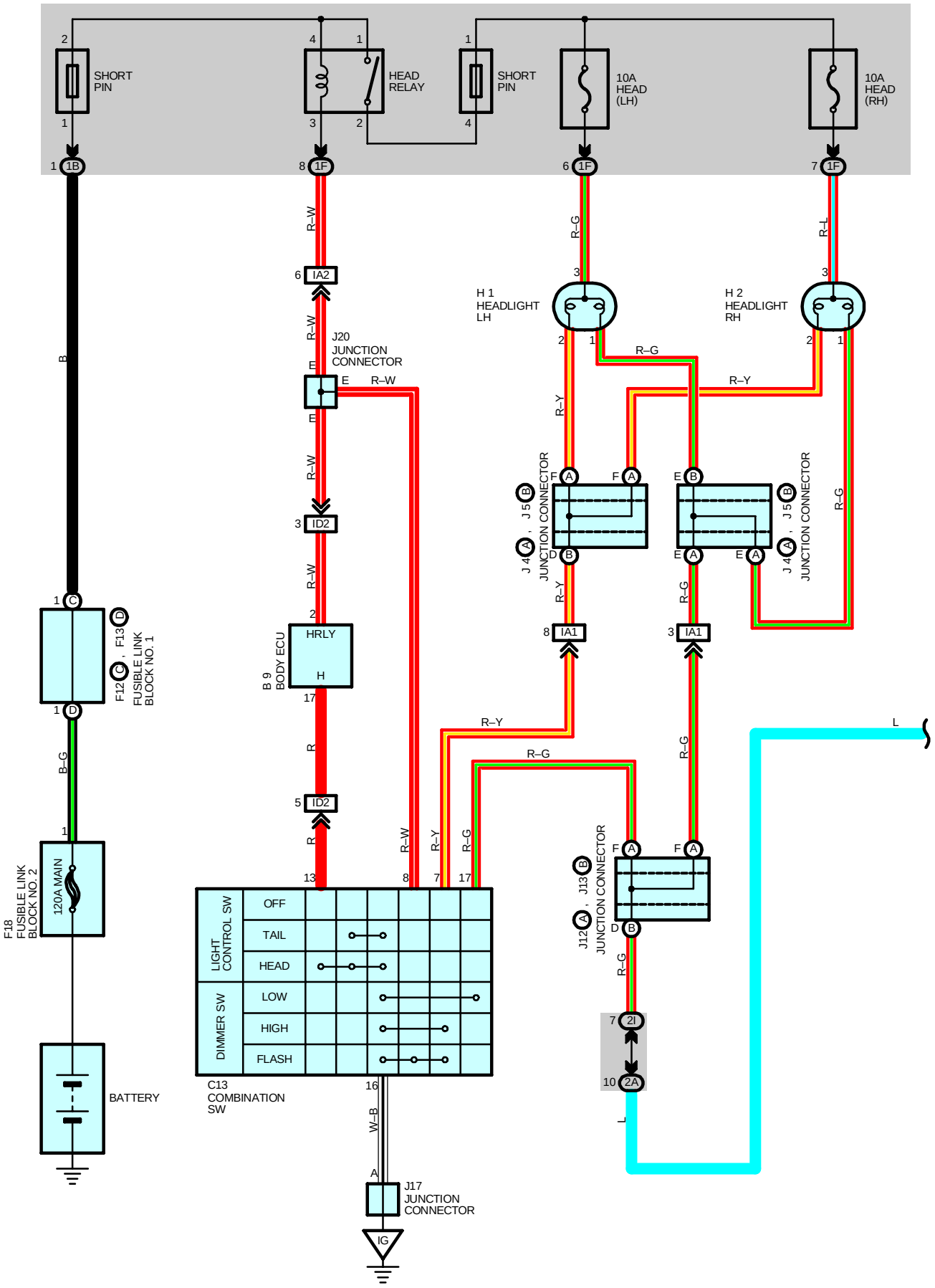

cardiagn.com

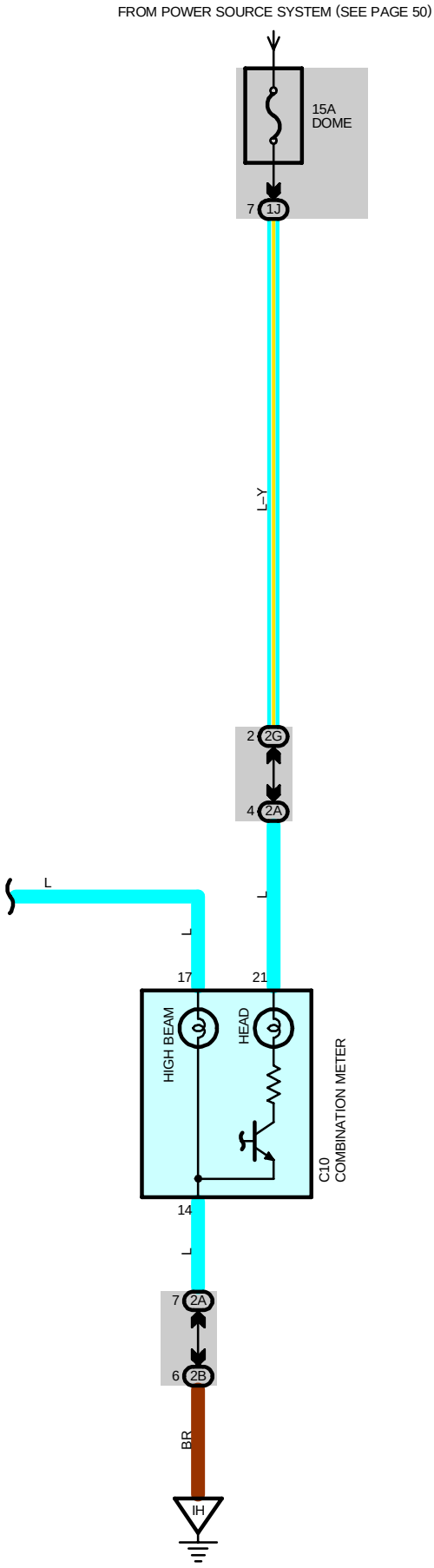

cardiagn.com

HEADLIGHT (w/o DAYTIME RUNNING LIGHT)

SERVICE HINTS

HEAD RELAY

1–2 : Closed with the light control SW at **HEAD** position or the dimmer SW at **FLASH** position

C13 COMBINATION SW

13–16 : Continuity with the light control SW at **HEAD** position
8–16 : Continuity with the dimmer SW at **FLASH** position
7–16 : Continuity with the dimmer SW at **HIGH** or **FLASH** position

: PARTS LOCATION

Code		See Page	Code		See Page	Code		See Page
B9		36	F18		38	J12	A	37
C10		36	H1		34	J13	B	37
C13		36	H2		34	J17		37
F12	C	34	J4	A	37	J20		37
F13	D	34	J5	B	37			

: JUNCTION BLOCK AND WIRE HARNESS CONNECTOR

Code	See Page	Junction Block and Wire Harness (Connector Location)
1B	27	Engine Room Main Wire and Engine Room J/B (Engine Compartment Left)
1F		
1J		
2A	30	Instrument Panel Wire and Instrument Panel J/B (Cowl Side Panel LH)
2B		
2G	31	Engine Room Main Wire and Instrument Panel J/B (Cowl Side Panel LH)
2I	31	Cowl Wire and Instrument Panel J/B (Cowl Side Panel LH)

: CONNECTOR JOINING WIRE HARNESS AND WIRE HARNESS

Code	See Page	Joining Wire Harness and Wire Harness (Connector Location)
IA1	42	Engine Room Main Wire and Cowl Wire (Cowl Side Panel LH)
IA2		
ID2	42	Instrument Panel Wire and Cowl Wire (Left Kick Panel)

: GROUND POINTS

Code	See Page	Ground Points Location
IG	42	Cowl Side Panel RH
IH	42	Right Kick Panel

cardiagn.com

cardiagn.com

TAILLIGHT

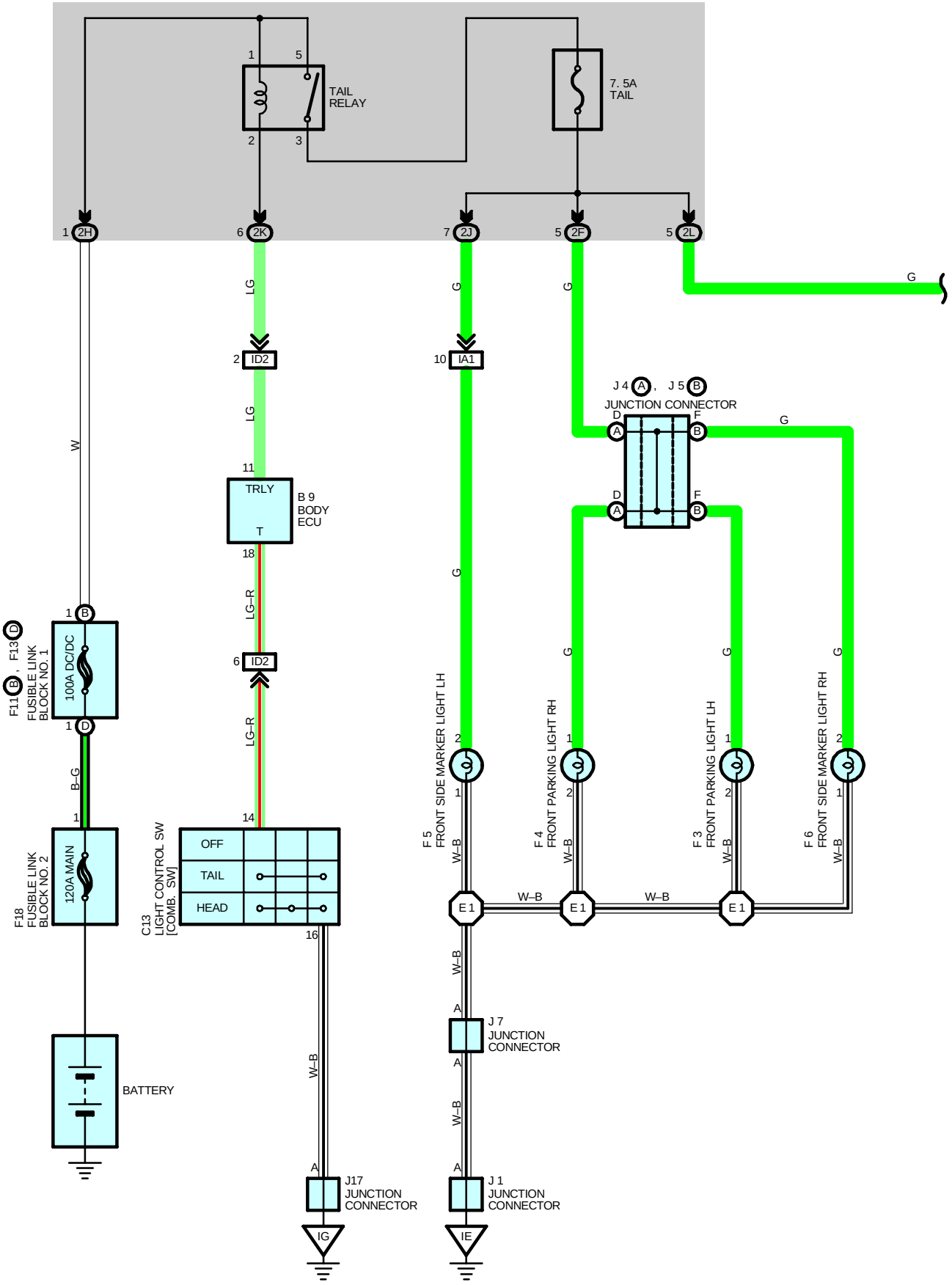

cardiagn.com

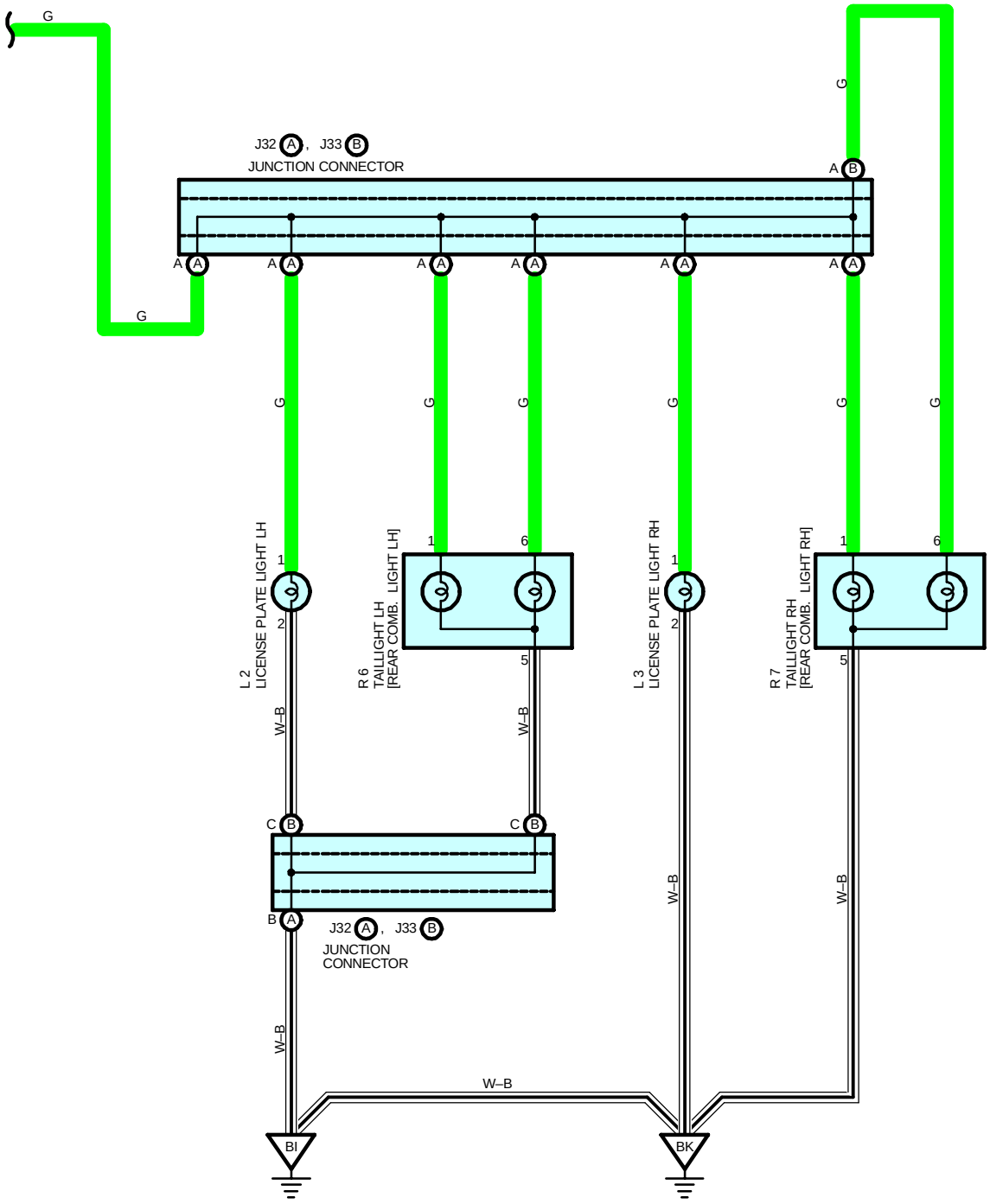

cardiagn.com

TAILLIGHT

SERVICE HINTS

TAIL RELAY

5–3 : Closed with the light control SW at **TAIL** or **HEAD** position

: PARTS LOCATION

Code		See Page	Code		See Page	Code		See Page
B9		36	F13	D	34	J32	A	38
C13		36	F18		38	J33	B	38
F3		34	J1		37	L2		38
F4		34	J4	A	37	L3		38
F5		34	J5	B	37	R6		39
F6		34	J7		37	R7		39
F11	B	34	J17		37			

: JUNCTION BLOCK AND WIRE HARNESS CONNECTOR

Code	See Page	Junction Block and Wire Harness (Connector Location)
2F	31	Engine Room Main Wire and Instrument Panel J/B (Cowl Side Panel LH)
2H		
2J	31	Cowl Wire and Instrument Panel J/B (Cowl Side Panel LH)
2K		
2L	31	Floor Wire and Instrument Panel J/B (Cowl Side Panel LH)

: CONNECTOR JOINING WIRE HARNESS AND WIRE HARNESS

Code	See Page	Joining Wire Harness and Wire Harness (Connector Location)
IA1	42	Engine Room Main Wire and Cowl Wire (Cowl Side Panel LH)
ID2	42	Instrument Panel Wire and Cowl Wire (Left Kick Panel)

: GROUND POINTS

Code	See Page	Ground Points Location
IE	42	Cowl Side Panel LH
IG	42	Cowl Side Panel RH
BI	46	Left Side of Rear Pillar
BK	46	Back Panel Center

: SPLICE POINTS

Code	See Page	Wire Harness with Splice Points	Code	See Page	Wire Harness with Splice Points
E1	40	Engine Room Main Wire			

cardiagn.com

cardiagn.com

ILLUMINATION

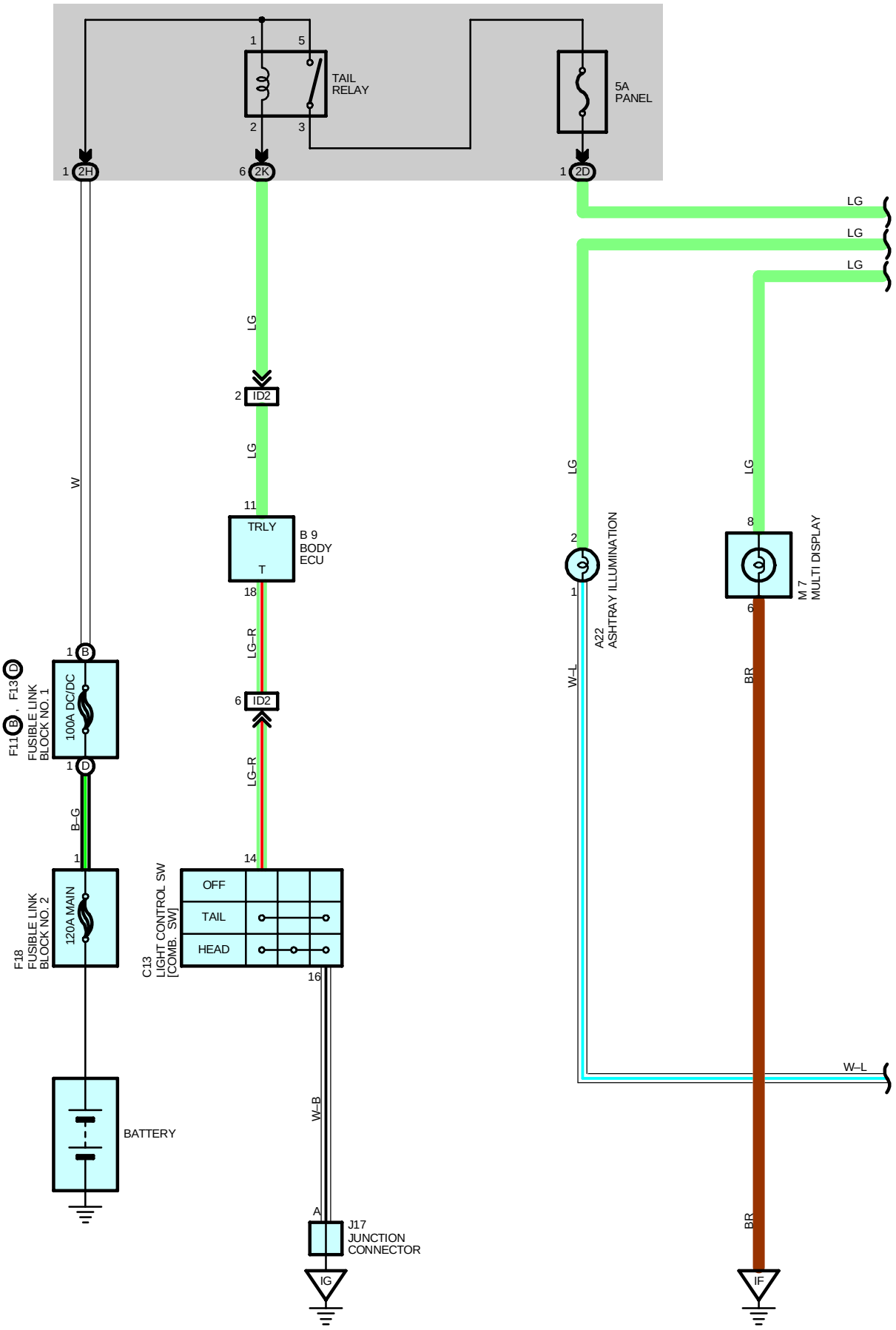

cardiagn.com

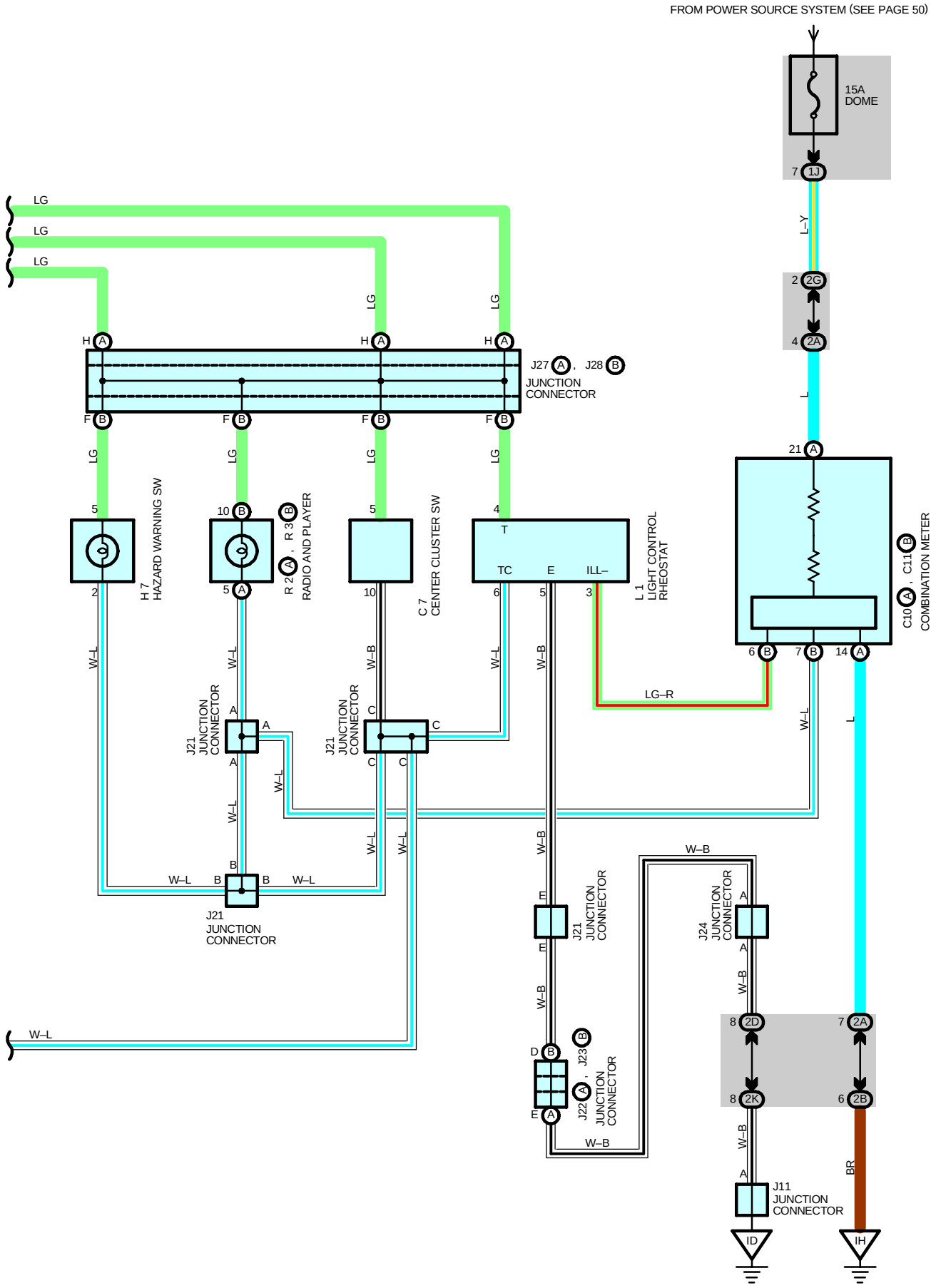

cardiagn.com

ILLUMINATION

SERVICE HINTS

TAIL RELAY

5–3 : Closed with the light control SW at **TAIL** or **HEAD** position

C13 COMBINATION SW

14–16 : Closed with the light control SW at **TAIL** or **HEAD** position

: PARTS LOCATION

Code		See Page	Code		See Page	Code		See Page
A22		36	F18		38	J27	A	37
B9		36	H7		37	J28	B	37
C7		36	J11		37	L1		37
C10	A	36	J17		37	M7		37
C11	B	36	J21		37	R2	A	37
C13		36	J22	A	37	R3	B	37
F11	B	34	J23	B	37			
F13	D	34	J24		37			

: JUNCTION BLOCK AND WIRE HARNESS CONNECTOR

Code	See Page	Junction Block and Wire Harness (Connector Location)
1J	27	Engine Room Main Wire and Engine Room J/B (Engine Compartment Left)
2A	30	Instrument Panel Wire and Instrument Panel J/B (Cowl Side Panel LH)
2B		
2D		
2G	31	Engine Room Main Wire and Instrument Panel J/B (Cowl Side Panel LH)
2H		
2K	31	Cowl Wire and Instrument Panel J/B (Cowl Side Panel LH)

: CONNECTOR JOINING WIRE HARNESS AND WIRE HARNESS

Code	See Page	Joining Wire Harness and Wire Harness (Connector Location)
ID2	42	Instrument Panel Wire and Cowl Wire (Left Kick Panel)

: GROUND POINTS

Code	See Page	Ground Points Location
ID	42	Cowl Side Panel LH
IF	42	Left Kick Panel
IG	42	Cowl Side Panel RH
IH	42	Right Kick Panel

cardiagn.com

cardiagn.com

TURN SIGNAL AND HAZARD WARNING LIGHT

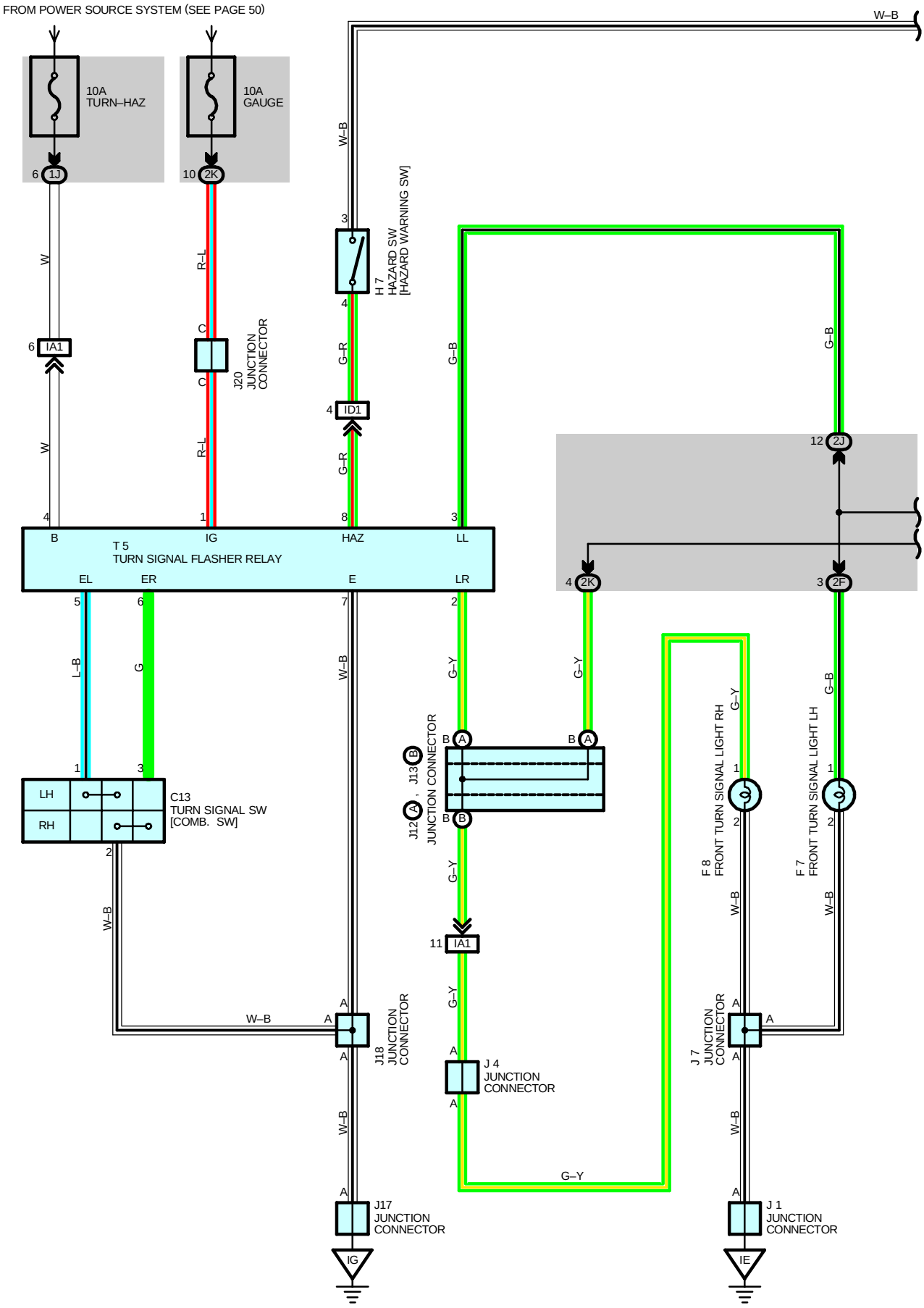

cardiagn.com

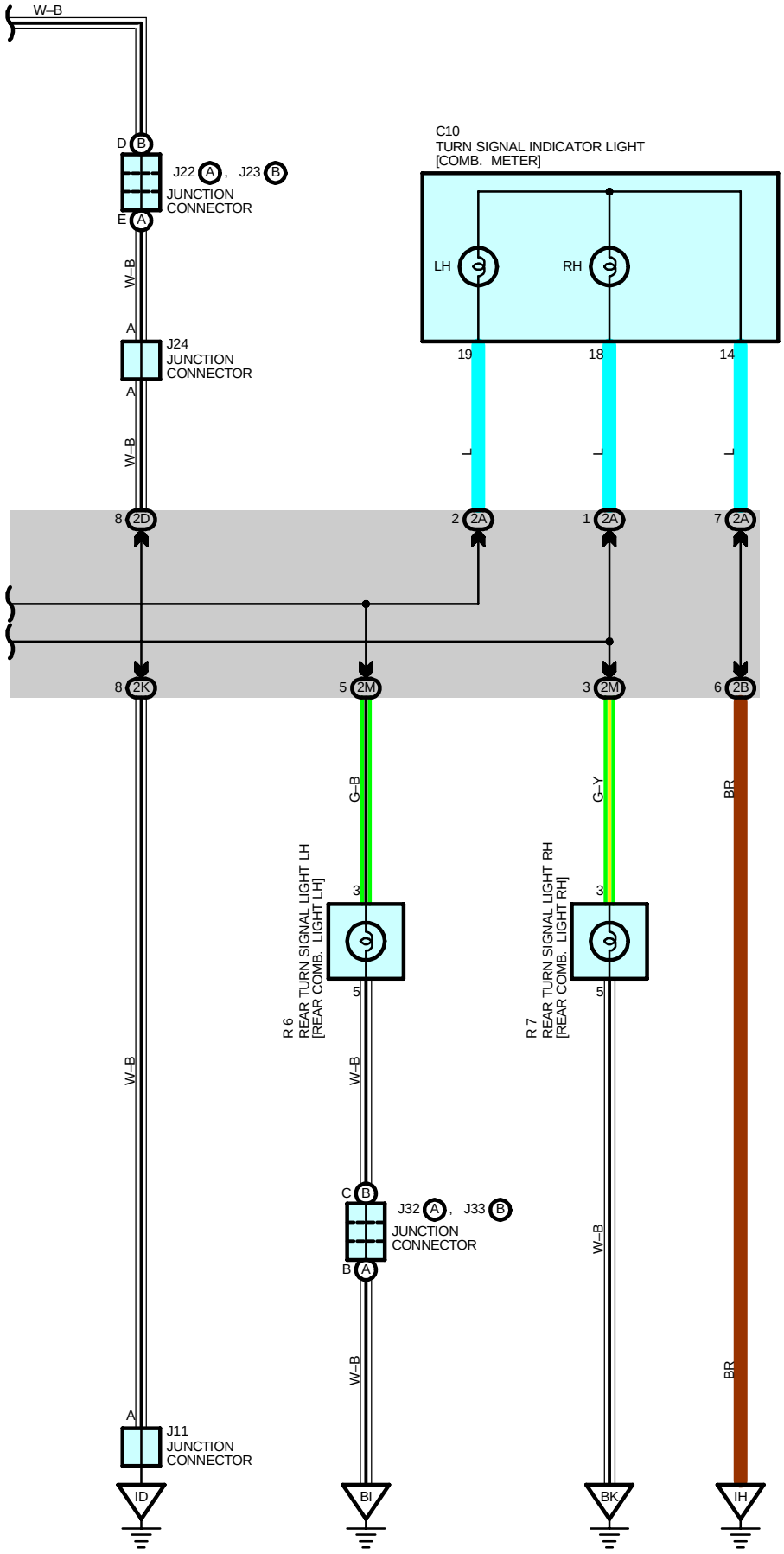

cardiagn.com

TURN SIGNAL AND HAZARD WARNING LIGHT

SERVICE HINTS

T5 TURN SIGNAL FLASHER RELAY

1–GROUND : Approx. **12** volts with the ignition SW at **ON** position
4–GROUND : Always approx. **12** volts
2, 3–GROUND : Changes from approx. **12** to **0** volts with the ignition SW at **ON** position and the turn signal SW at **LEFT** or **RIGHT** position or the hazard SW at **ON** position
5–GROUND : Continuity with the ignition SW at **ON** position and the turn signal SW at **LEFT** position
6–GROUND : Continuity with the ignition SW at **ON** position and the turn signal SW at **RIGHT** position
8–GROUND : Continuity with the hazard SW at **ON** position
7–GROUND : Always continuity

: PARTS LOCATION

Code	See Page	Code	See Page	Code	See Page
C10	36	J11	37	J24	37
C13	36	J12 A	37	J32 A	38
F7	34	J13 B	37	J33 B	38
F8	34	J17	37	R6	39
H7	37	J18	37	R7	39
J1	37	J20	37	T5	37
J4	37	J22 A	37		
J7	37	J23 B	37		

: JUNCTION BLOCK AND WIRE HARNESS CONNECTOR

Code	See Page	Junction Block and Wire Harness (Connector Location)
1J	27	Engine Room Main Wire and Engine Room J/B (Engine Compartment Left)
2A	30	Instrument Panel Wire and Instrument Panel J/B (Cowl Side Panel LH)
2B		
2D		
2F	31	Engine Room Main Wire and Instrument Panel J/B (Cowl Side Panel LH)
2J	31	Cowl Wire and Instrument Panel J/B (Cowl Side Panel LH)
2K		
2M	31	Floor Wire and Instrument Panel J/B (Cowl Side Panel LH)

: CONNECTOR JOINING WIRE HARNESS AND WIRE HARNESS

Code	See Page	Joining Wire Harness and Wire Harness (Connector Location)
IA1	42	Engine Room Main Wire and Cowl Wire (Cowl Side Panel LH)
ID1	42	Instrument Panel Wire and Cowl Wire (Left Kick Panel)

: GROUND POINTS

Code	See Page	Ground Points Location
ID	42	Cowl Side Panel LH
IE		
IG	42	Cowl Side Panel RH
IH	42	Right Kick Panel
BI	46	Left Side of Rear Pillar
BK	46	Back Panel Center

cardiagn.com

cardiagn.com

STOP LIGHT

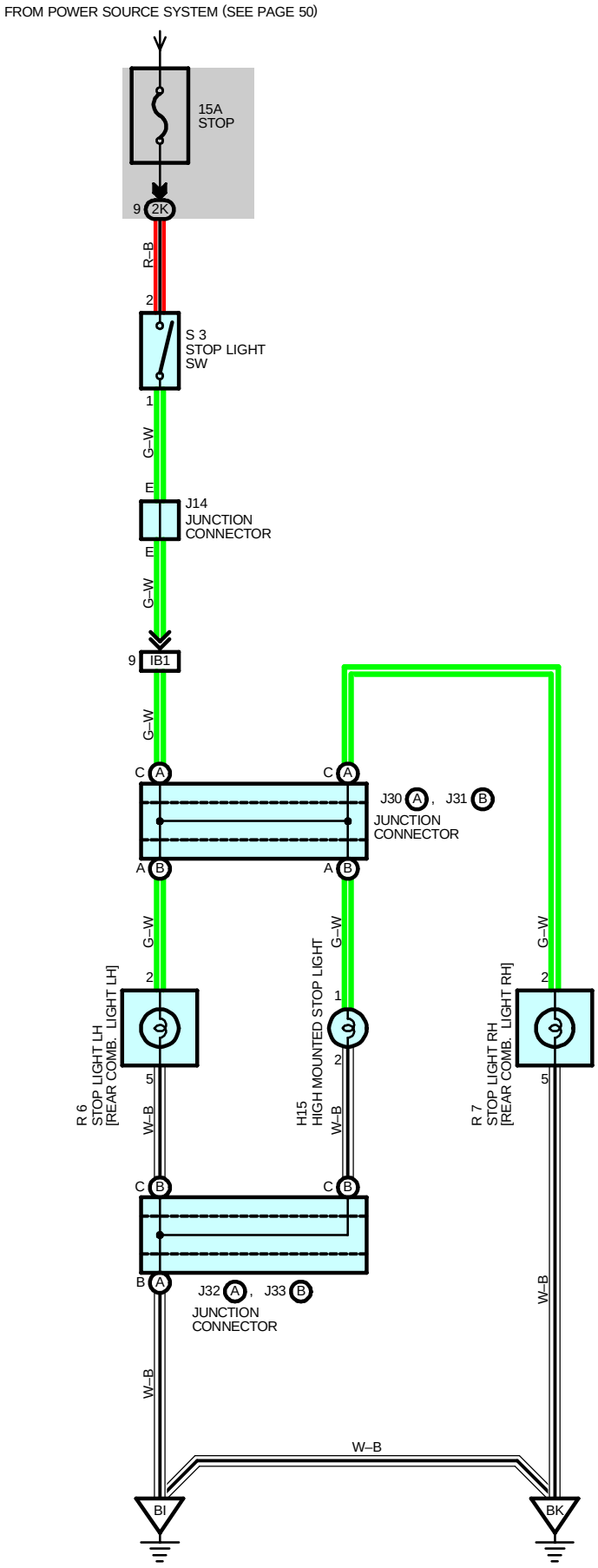

cardiagn.com

SERVICE HINTS

S3 STOP LIGHT SW

2–1 : Closed with the brake pedal depressed

: PARTS LOCATION

Code		See Page	Code		See Page	Code	See Page
H15		38	J31	B	38	R6	39
J14		37	J32	A	38	R7	39
J30	A	38	J33	B	38	S3	37

: JUNCTION BLOCK AND WIRE HARNESS CONNECTOR

Code	See Page	Junction Block and Wire Harness (Connector Location)
2K	31	Cowl Wire and Instrument Panel J/B (Cowl Side Panel LH)

: CONNECTOR JOINING WIRE HARNESS AND WIRE HARNESS

Code	See Page	Joining Wire Harness and Wire Harness (Connector Location)
IB1	42	Floor Wire and Cowl Wire (Cowl Side Panel LH)

: GROUND POINTS

Code	See Page	Ground Points Location
BI	46	Left Side of Rear Pillar
BK	46	Back Panel Center

cardiagn.com

BACK–UP LIGHT

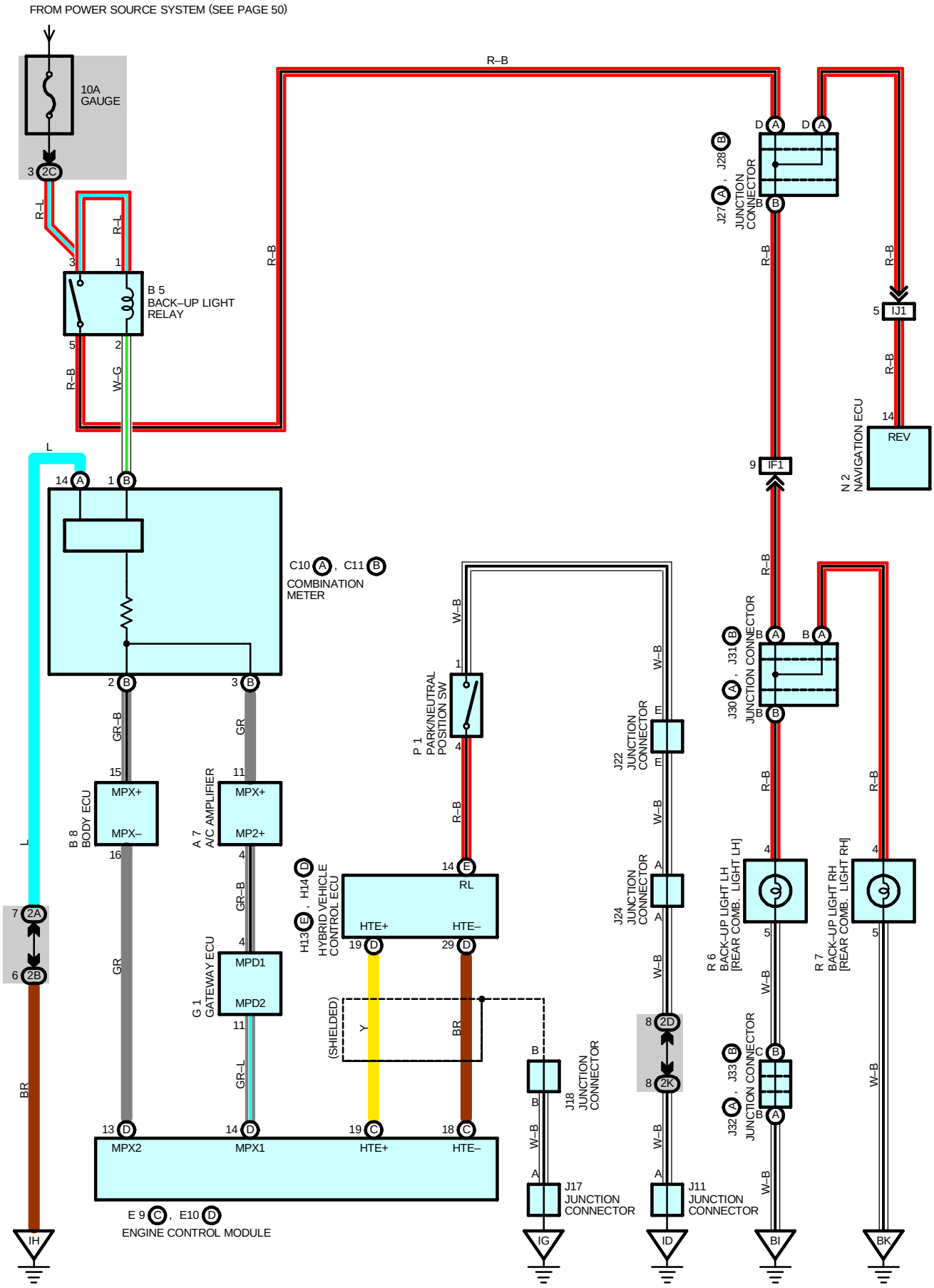

cardiagn.com

SERVICE HINTS

P1 PARK/NEUTRAL POSITION SW

4–1 : Closed with the shift lever at **R** position

B5 BACK–UP LIGHT RELAY

3–5 : Closed with the shift lever at **R** position

: PARTS LOCATION

Code		See Page	Code		See Page	Code		See Page
A7		36	H14	D	37	J31	B	38
B5		36	J11		37	J32	A	38
B8		36	J17		37	J33	B	38
C10	A	36	J18		37	N2		39
C11	B	36	J22		37	P1		37
E9	C	36	J24		37	R6		39
E10	D	36	J27	A	37	R7		39
G1		37	J28	B	37			
H13	E	37	J30	A	38			

: JUNCTION BLOCK AND WIRE HARNESS CONNECTOR

Code	See Page	Junction Block and Wire Harness (Connector Location)
2A	30	Instrument Panel Wire and Instrument Panel J/B (Cowl Side Panel LH)
2B		
2C		
2D		
2K	31	Cowl Wire and Instrument Panel J/B (Cowl Side Panel LH)

: CONNECTOR JOINING WIRE HARNESS AND WIRE HARNESS

Code	See Page	Joining Wire Harness and Wire Harness (Connector Location)
IF1	42	Instrument Panel Wire and Floor Wire (Left Kick Panel)
IJ1	44	Floor No.3 Wire and Instrument Panel Wire (Under the Instrument Panel Center)

: GROUND POINTS

Code	See Page	Ground Points Location
ID	42	Cowl Side Panel LH
IG	42	Cowl Side Panel RH
IH	42	Right Kick Panel
BI	46	Left Side of Rear Pillar
BK	46	Back Panel Center

cardiagn.com

LIGHT AUTO TURN OFF

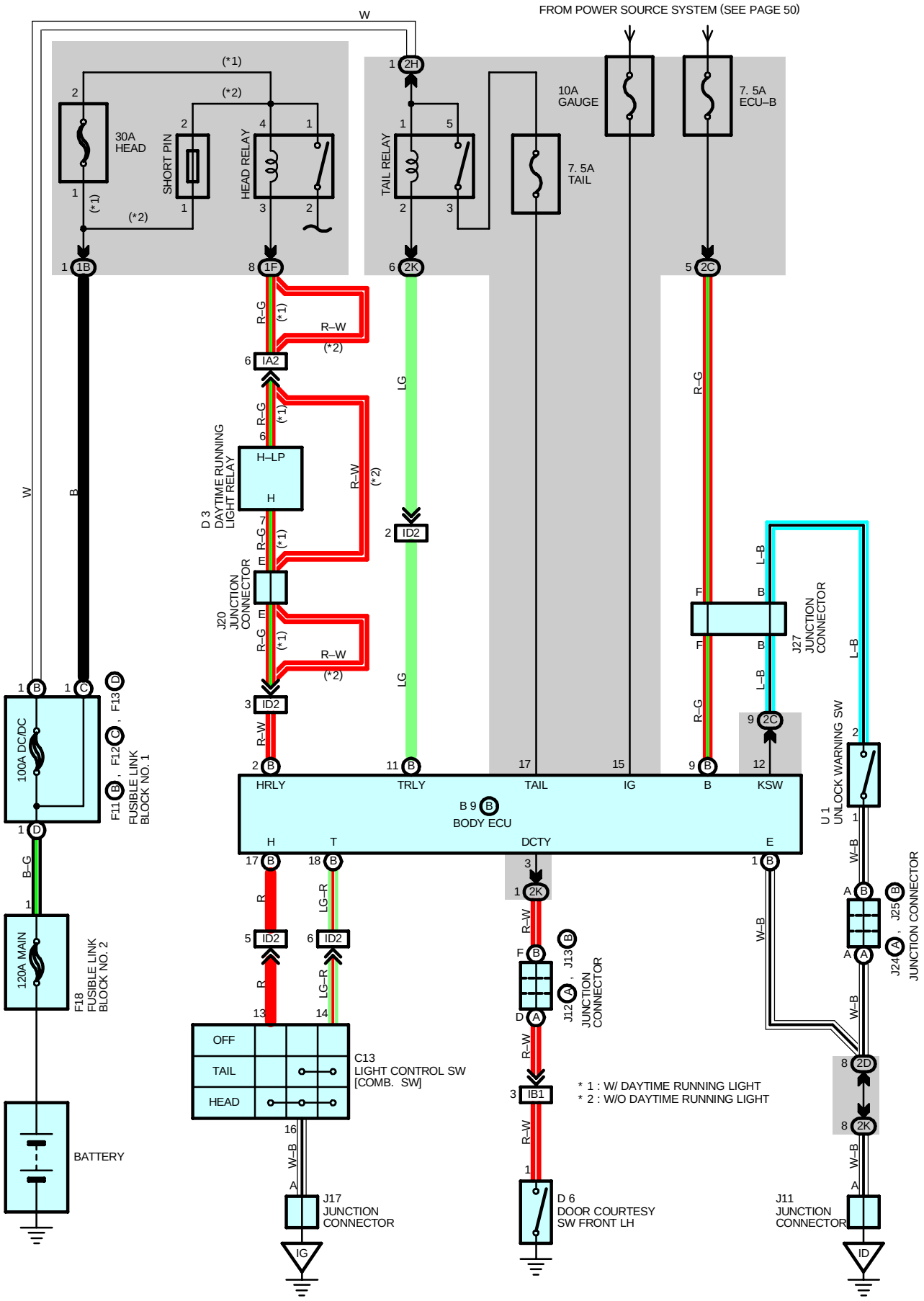

cardiagn.com

SYSTEM OUTLINE

With the ignition SW turned on, the current flows to TERMINAL 15 of the body ECU through GAUGE fuse.
Voltage is applied at all times to TERMINAL (A) 11 of the body ECU through the TAIL relay. Coil side, and to TERMINAL (A) 2 through the HEAD relay coil side (w/o daytime running light) or through the daytime running light relay (w/ daytime running light).

1. NORMAL LIGHTING OPERATION

<Turn taillight on>
With the light control SW turned to TAIL position, a signal is input into TERMINAL (A) 18 of the body ECU. Due to this signal, the current flowing to TERMINAL (A) 11 of the body ECU flows to TERMINAL (A) 18 to TERMINAL 14 of the light control SW to TERMINAL 16 to GROUND, and taillight relay causes taillights to turn on.

<Turn headlight on>
With the light control SW turned to HEAD position, a signal is input into TERMINALS (A) 17 and (A) 18 of the body ECU. Due to this signal, the current flowing to TERMINAL (A) 2 of the body ECU flows to TERMINAL (A) 17 to TERMINAL 13 of the light control SW to TERMINAL 16 to GROUND in the headlight circuit, and causes taillight and HEAD relay to turn the lights on. The taillight circuit is same as above.

2. LIGHT AUTO TURN OFF OPERATION

With light on and ignition SW turned off (Input signal goes to TERMINAL 15 of the body ECU), when the driver's door is opened (Input signal goes to TERMINAL 3 of the body ECU), the ECU operates and the current is cut off which flows from TERMINAL (A) 11 of the body ECU to TERMINAL (A) 18 in taillight circuit and from TERMINAL (A) 2 to TERMINAL (A) 17 in headlight circuit.
As a result, all lights are turned off automatically.

SERVICE HINTS

HEAD RELAY

2–1 : Closed with the light control SW at **HEAD** position or the dimmer SW at **FLASH** position
Closed with the engine running and the parking brake lever released (Parking brake SW off) [w/ daytime running light]

TAIL RELAY

3–5 : Closed with the light control SW at **TAIL** or **HEAD** position

D6 DOOR COURTESY SW LH

1–GROUND : Continuity with the front LH door open

B9 (B) BODY ECU

15–GROUND : Approx. **12** volts with the ignition SW at **ON** position
3–GROUND : Continuity with the front LH door open
(B) 9–GROUND : Always approx. **12** volts
(B) 1–GROUND : Always continuity
(B) 2–GROUND : Continuity with the light control SW at **HEAD** position
(B)11–GROUND : Continuity with the light control SW at **TAIL** or **HEAD** position

: PARTS LOCATION

Code		See Page	Code		See Page	Code		See Page
B9	B	36	F13	D	34	J20		37
C13		36	F18		38	J24	A	37
D3		36	J11		37	J25	B	37
D6		38	J12	A	37	J27		37
F11	B	34	J13	B	37	U1		37
F12	C	34	J17		37			

: JUNCTION BLOCK AND WIRE HARNESS CONNECTOR

Code	See Page	Junction Block and Wire Harness (Connector Location)
1B	27	Engine Room Main Wire and Engine Room J/B (Engine Compartment Left)
1F		
2C	30	Instrument Panel Wire and Instrument Panel J/B (Cowl Side Panel LH)
2D		
2H	31	Engine Room Main Wire and Instrument Panel J/B (Cowl Side Panel LH)
2K	31	Cowl Wire and Instrument Panel J/B (Cowl Side Panel LH)

cardiagn.com

LIGHT AUTO TURN OFF

: CONNECTOR JOINING WIRE HARNESS AND WIRE HARNESS

Code	See Page	Joining Wire Harness and Wire Harness (Connector Location)
IA2	42	Engine Room Main Wire and Cowl Wire (Cowl Side Panel LH)
IB1	42	Floor Wire and Cowl Wire (Cowl Side Panel LH)
ID2	42	Instrument Panel Wire and Cowl Wire (Left Kick Panel)

: GROUND POINTS

Code	See Page	Ground Points Location
ID	42	Cowl Side Panel LH
IG	42	Cowl Side Panel RH

cardiagn.com

cardiagn.com

INTERIOR LIGHT

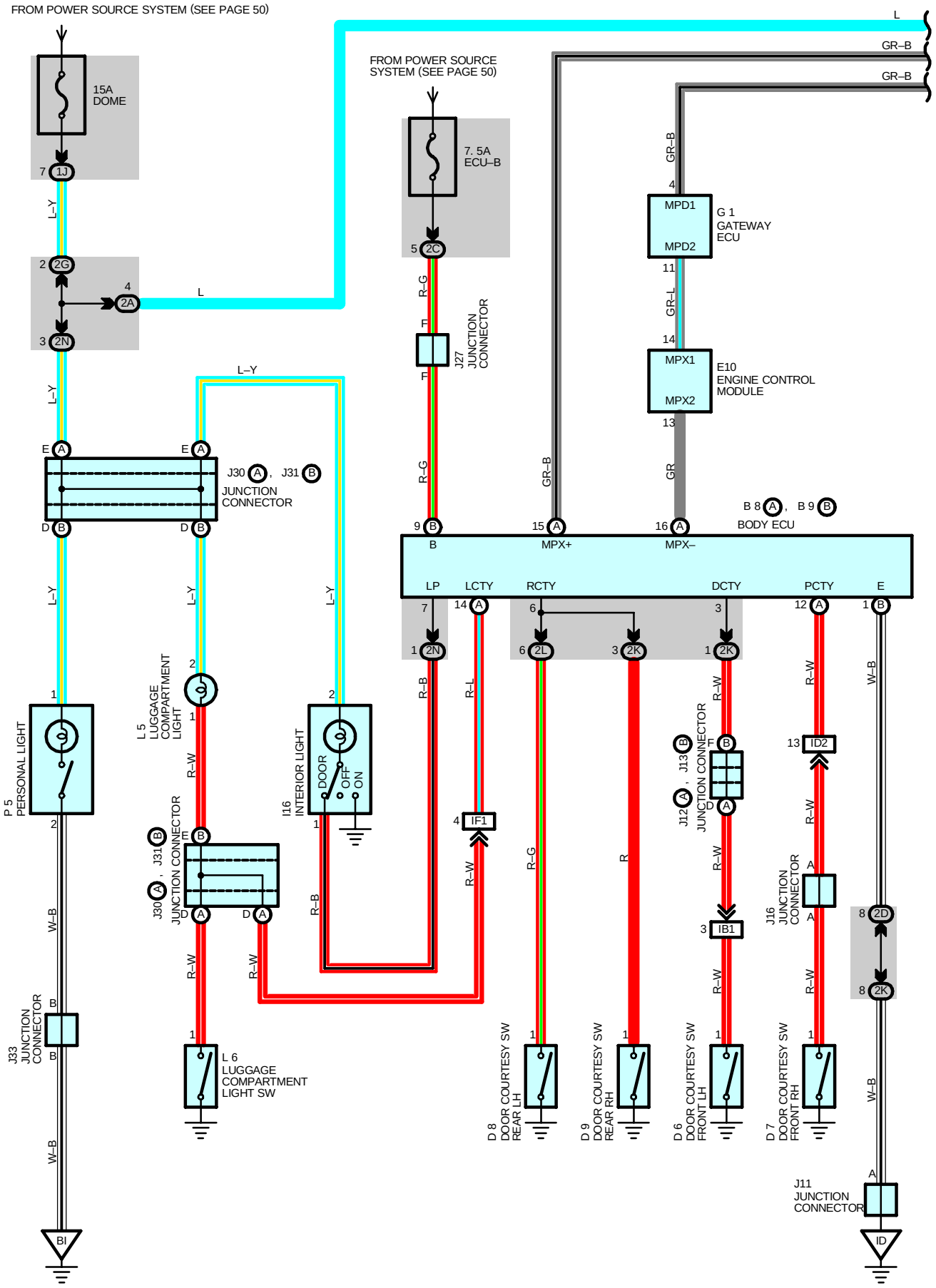

cardiagn.com

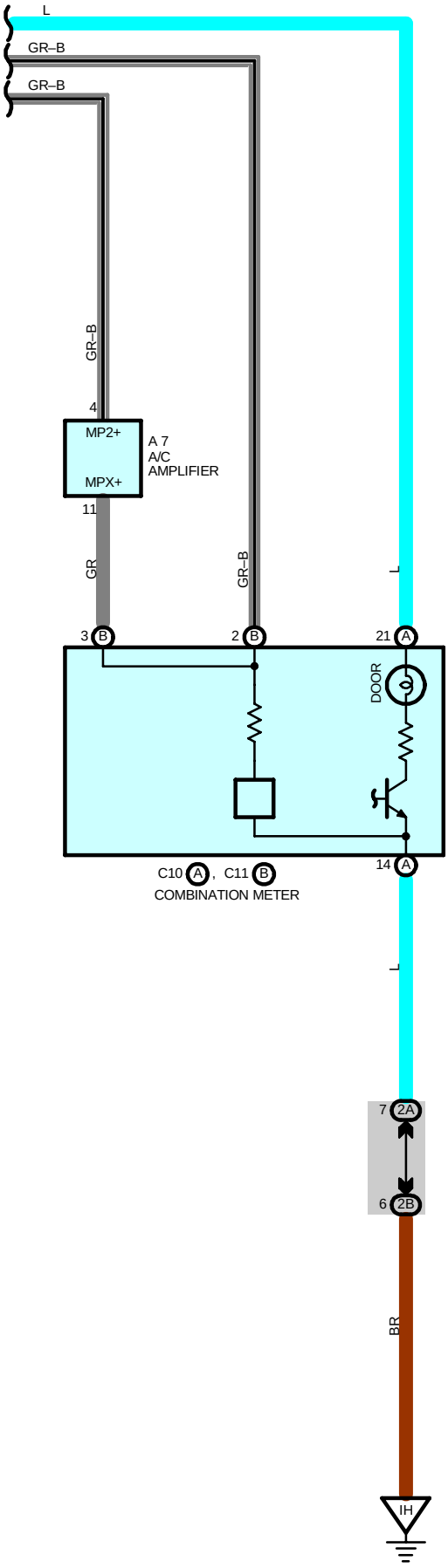

cardiagn.com

INTERIOR LIGHT

SERVICE HINTS

B8 (A), B9 (B) BODY ECU

3–GROUND : Continuity with front LH door open
6–GROUND : Continuity with rear LH, RH door open
(A)14–GROUND : Continuity with front RH door open
(B) 9–GROUND : Always approx. **12** volts

L6 LUGGAGE COMPARTMENT LIGHT SW

1–GROUND : Closed with the luggage compartment door open

: PARTS LOCATION

Code		See Page	Code		See Page	Code		See Page
A7		36	D9		38	J27		37
B8	A	36	E10		36	J30	A	38
B9	B	36	G1		37	J31	B	38
C10	A	36	I16		38	J33		38
C11	B	36	J11		37	L5		38
D6		38	J12	A	37	L6		38
D7		38	J13	B	37	P5		39
D8		38	J16		37			

: JUNCTION BLOCK AND WIRE HARNESS CONNECTOR

Code	See Page	Junction Block and Wire Harness (Connector Location)
1J	27	Engine Room Main Wire and Engine Room J/B (Engine Compartment Left)
2A	30	Instrument Panel Wire and Instrument Panel J/B (Cowl Side Panel LH)
2B		
2C		
2D		
2G	31	Engine Room Main Wire and Instrument Panel J/B (Cowl Side Panel LH)
2K	31	Cowl Wire and Instrument Panel J/B (Cowl Side Panel LH)
2L	31	Floor Wire and Instrument Panel J/B (Cowl Side Panel LH)
2N		

: CONNECTOR JOINING WIRE HARNESS AND WIRE HARNESS

Code	See Page	Joining Wire Harness and Wire Harness (Connector Location)
IB1	42	Floor Wire and Cowl Wire (Cowl Side Panel LH)
ID2	42	Instrument Panel Wire and Cowl Wire (Left Kick Panel)
IF1	42	Instrument Panel Wire and Floor Wire (Left Kick Panel)

: GROUND POINTS

Code	See Page	Ground Points Location
ID	42	Cowl Side Panel LH
IH	42	Right Kick Panel
BI	46	Left Side of Rear Pillar

cardiagn.com

cardiagn.com

MULTIPLEX COMMUNICATION SYSTEM (COMMUNICATION BUS)

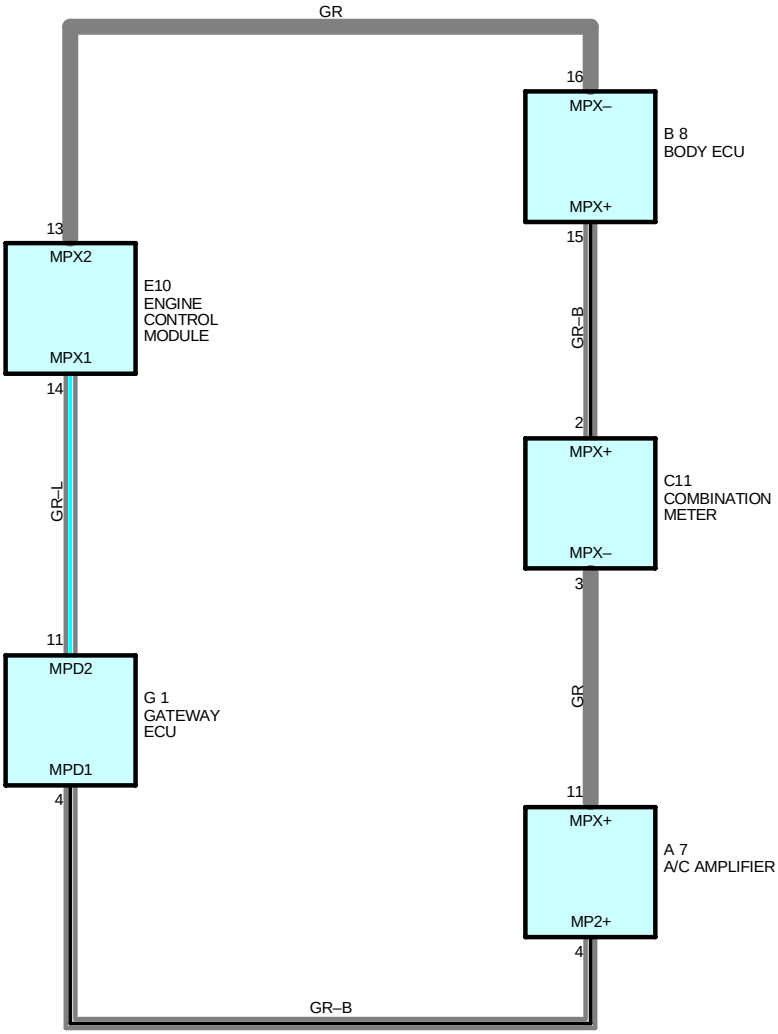

cardiagn.com

cardiagn.com

KEY REMINDER AND LIGHT REMINDER BUZZER

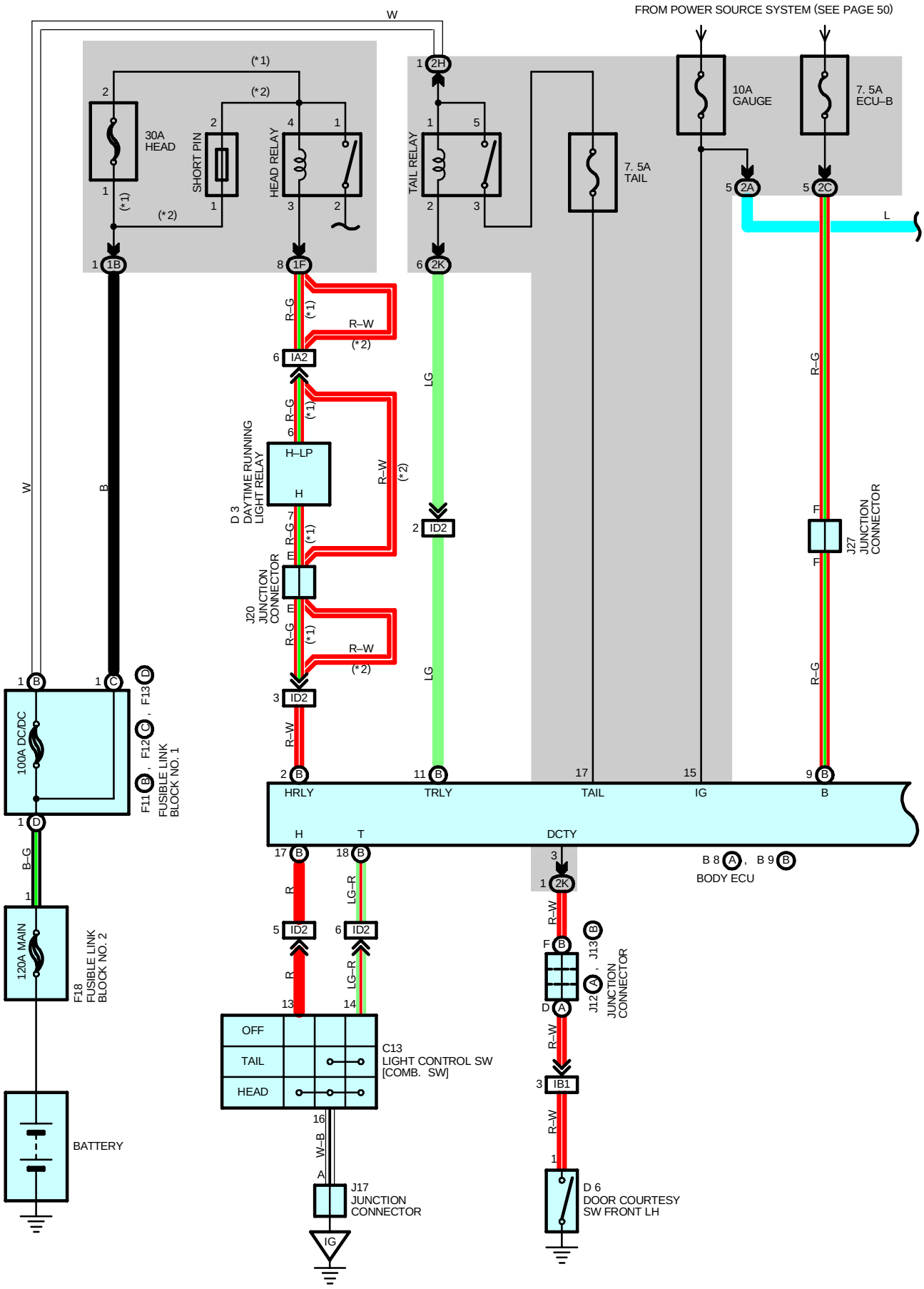

cardiagn.com

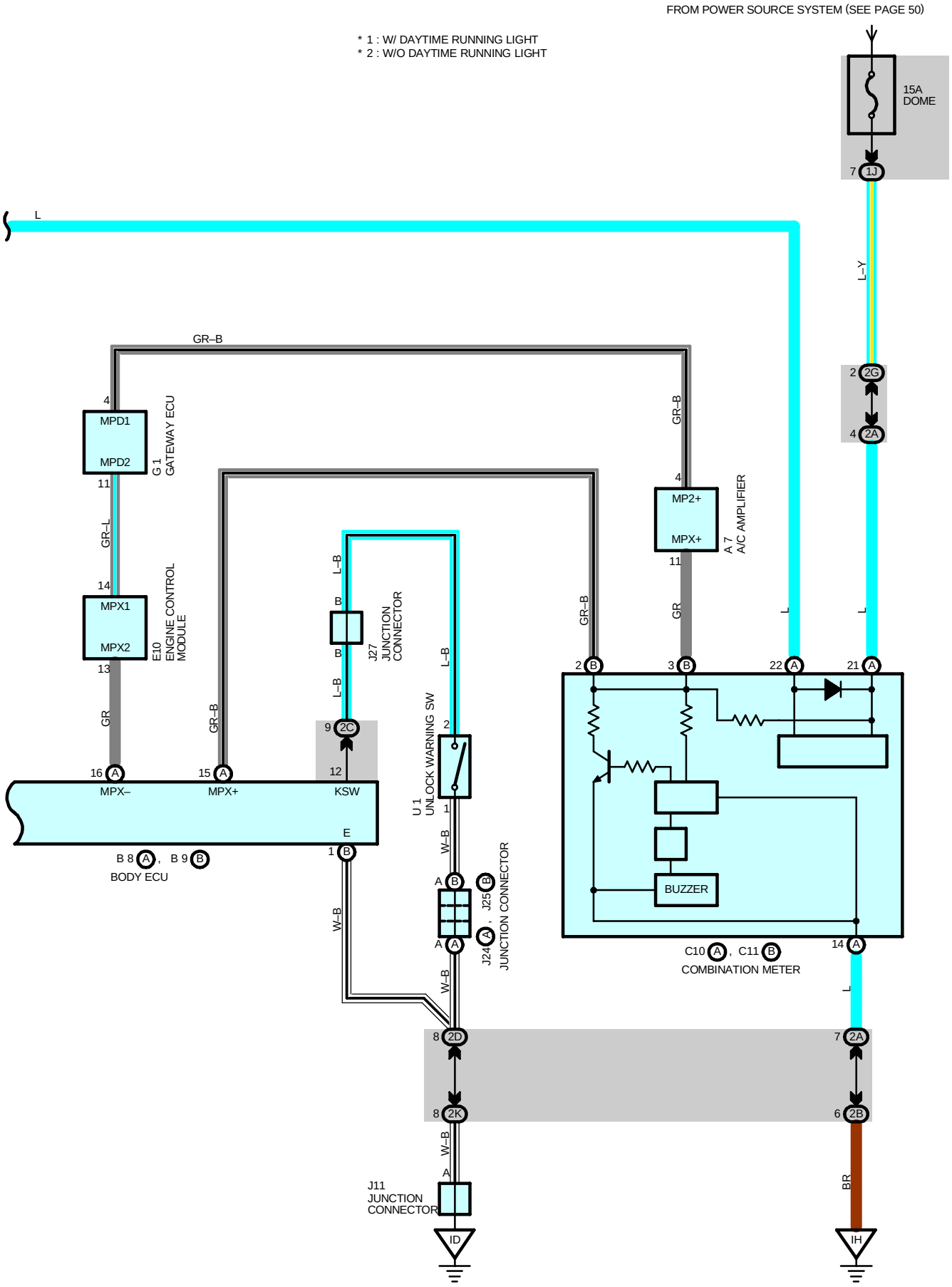

cardiagn.com

KEY REMINDER AND LIGHT REMINDER BUZZER

SYSTEM OUTLINE

The current always flows from GAUGE fuse to body ECU TERMINAL 15.

1. LIGHT REMINDER BUZZER SYSTEM

If you open the door of the driver's side when either headlight or taillight is on with ignition SW being off, the buzzer comes on.

2. KEY REMINDER BUZZER SYSTEM

If you open the door of the driver's side when the ignition key is inserted in ignition SW being off, the buzzer comes on.

SERVICE HINTS

B8 (A), B9 (B) BODY ECU

(B) 9–GROUND : Always approx. **12** volts
(B) 1–GROUND : Always continuity
12–GROUND : Continuity with the ignition key in cylinder

D6 DOOR COURTESY SW FRONT LH

1–GROUND : Closed with the driver's door open

C10 (A) COMBINATION METER

(A)22–GROUND : Approx. **12** volts with the ignition SW at **ON** position
(A)21–GROUND : Always approx. **12** volts
(A)14–GROUND : Always continuity

: PARTS LOCATION

Code		See Page	Code		See Page	Code		See Page
A7		36	E10		36	J13	B	37
B8	A	36	F11	B	34	J17		37
B9	B	36	F12	C	34	J20		37
C10	A	36	F13	D	34	J24	A	37
C11	B	36	F18		38	J25	B	37
C13		36	G1		37	J27		37
D3		36	J11		37	U1		37
D6		38	J12	A	37			

: JUNCTION BLOCK AND WIRE HARNESS CONNECTOR

Code	See Page	Junction Block and Wire Harness (Connector Location)
1B	27	Engine Room Main Wire and Engine Room J/B (Engine Compartment Left)
1F		
1J		
2A	30	Instrument Panel Wire and Instrument Panel J/B (Cowl Side Panel LH)
2B		
2C		
2D		
2G	31	Engine Room Main Wire and Instrument Panel J/B (Cowl Side Panel LH)
2H		
2K	31	Cowl Wire and Instrument Panel J/B (Cowl Side Panel LH)

: CONNECTOR JOINING WIRE HARNESS AND WIRE HARNESS

Code	See Page	Joining Wire Harness and Wire Harness (Connector Location)
IA2	42	Engine Room Main Wire and Cowl Wire (Cowl Side Panel LH)
IB1	42	Floor Wire and Cowl Wire (Cowl Side Panel LH)
ID2	42	Instrument Panel Wire and Cowl Wire (Left Kick Panel)

cardiagn.com

▽ **: GROUND POINTS**

Code	See Page	Ground Points Location
ID	42	Cowl Side Panel LH
IG	42	Cowl Side Panel RH
IH	42	Right Kick Panel

cardiagn.com

SEAT BELT WARNING

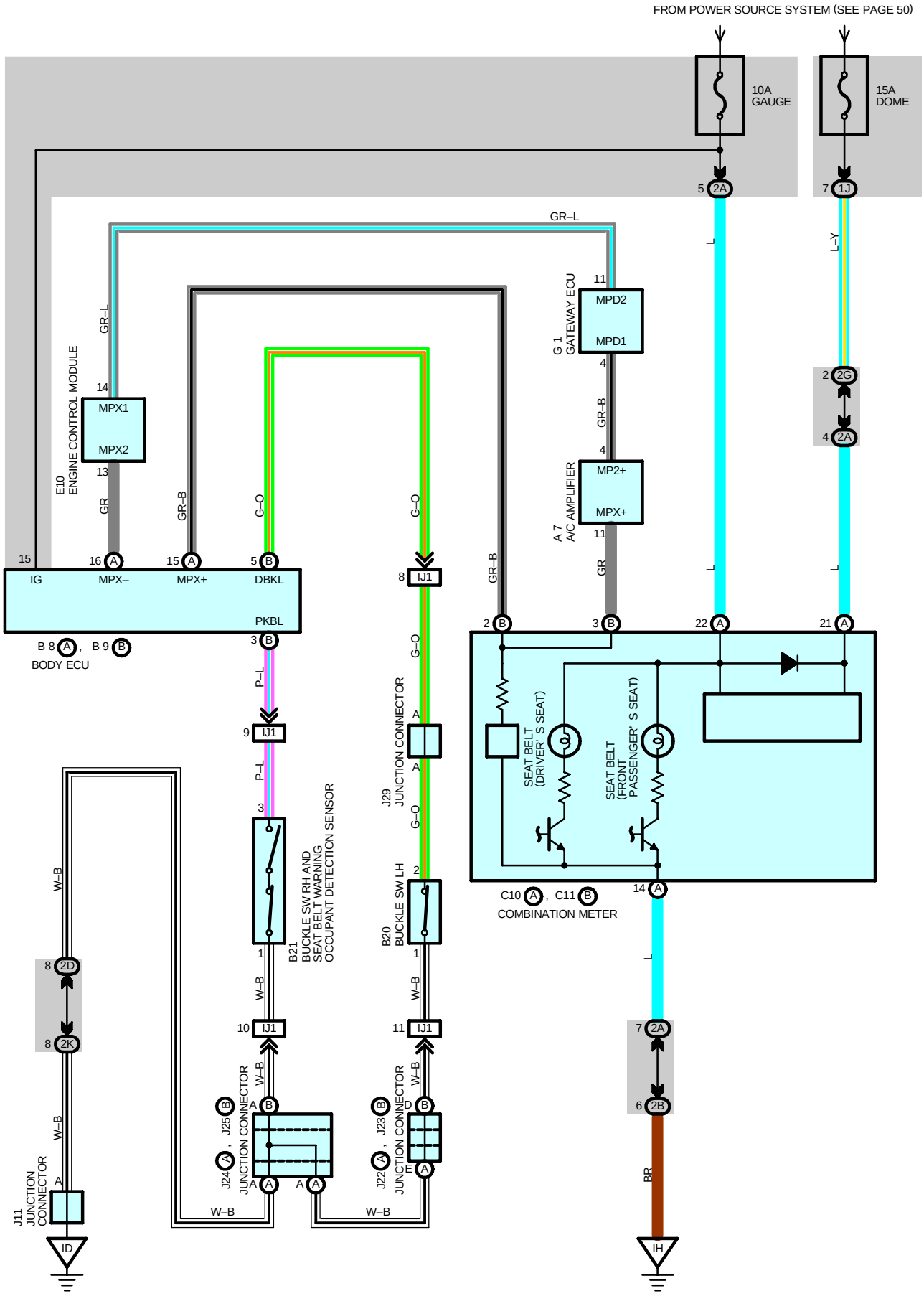

cardiagn.com

SYSTEM OUTLINE

When the driver has not fastened the seat belt while the ignition SW is ON, the driver seat belt warning light blinks, and a warning buzzer comes on.
Also, in the front passenger seat, a sensor recognizes a passenger, and when the passenger has not fastened the seat belt, the front passenger seat belt warning light blinks.

SERVICE HINTS

B20 BUCKLE SW LH

1–2 : Closed with driver's seat belt in use

: PARTS LOCATION

Code		See Page	Code		See Page	Code		See Page
A7		36	C10	A	36	J22	A	37
B8	A	36	C11	B	36	J23	B	37
B9	B	36	E10		36	J24	A	37
B20		38	G1		37	J25	B	37
B21		38	J11		37	J29		37

: JUNCTION BLOCK AND WIRE HARNESS CONNECTOR

Code	See Page	Junction Block and Wire Harness (Connector Location)
1J	27	Engine Room Main Wire and Engine Room J/B (Engine Compartment Left)
2A	30	Instrument Panel Wire and Instrument Panel J/B (Cowl Side Panel LH)
2B		
2D		
2G	31	Engine Room Main Wire and Instrument Panel J/B (Cowl Side Panel LH)
2K	31	Cowl Wire and Instrument Panel J/B (Cowl Side Panel LH)

: CONNECTOR JOINING WIRE HARNESS AND WIRE HARNESS

Code	See Page	Joining Wire Harness and Wire Harness (Connector Location)
IJ1	44	Floor No.3 Wire and Instrument Panel Wire (Under the Instrument Panel Center)

: GROUND POINTS

Code	See Page	Ground Points Location
ID	42	Cowl Side Panel LH
IH	42	Right Kick Panel

cardiagn.com

WIPER AND WASHER

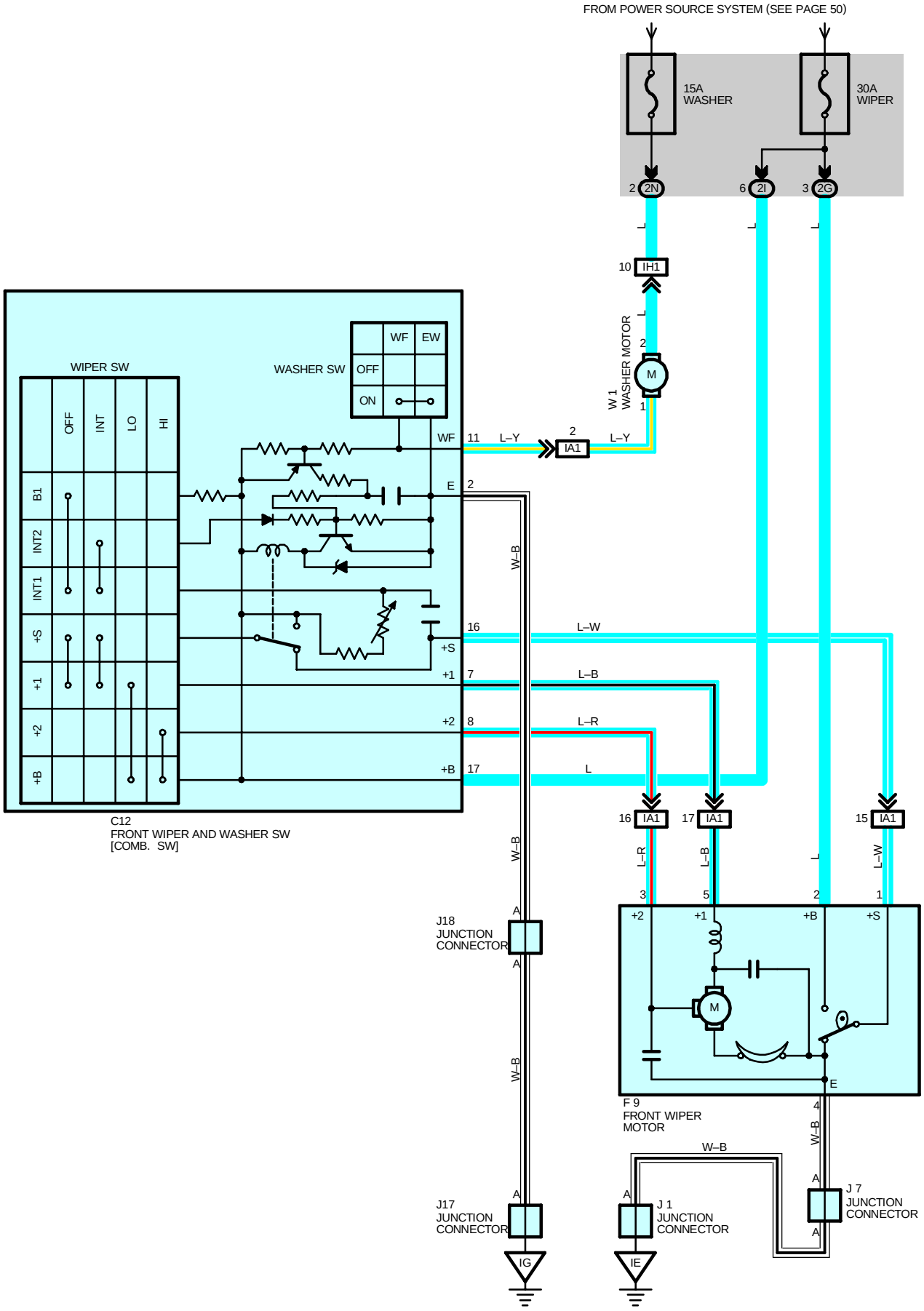

cardiagn.com

SYSTEM OUTLINE

When the ignition SW is turned ON, the current flows from WIPER fuse to wiper and washer SW TERMINAL 17 and front wiper motor TERMINAL 2 or the current flows from WASHER fuse to washer motor TERMINAL 2.

1. LO POSITION

When the wiper and washer SW is at LO position, the current flows from wiper and washer SW TERMINAL 17 to TERMINAL 7 to front wiper motor TERMINAL 5 to TERMINAL 4 to GROUND, and the front wiper motor runs at low speed.

2. HI POSITION

When the wiper and washer SW is at HI position, the current flows from wiper and washer SW TERMINAL 17 to TERMINAL 8 to front wiper motor TERMINAL 3 to TERMINAL 4 to GROUND, and the front wiper motor runs at high speed.

3. INT POSITION

When the wiper and washer SW is at INT position, the wiper relay is activated and the current flows from wiper and washer SW TERMINAL 17 to TERMINAL 2 to GROUND. This current activates the intermittent circuit, and the current flows from wiper and washer SW TERMINAL 17 to TERMINAL 7 to front wiper motor TERMINAL 5 to TERMINAL 4 to GROUND, and operates the front wipers.

4. WASHER CONTINUOUS OPERATION

When the wiper and washer SW is pulled to WASHER position (Washer SW ON position), the current from the WASHER fuse flows to washer motor TERMINAL 2 to TERMINAL 1 to wiper and washer SW TERMINAL 11 to TERMINAL 2 to GROUND, and operates the washer motor to emit a water spray. At the same time, the current flows from the WIP fuse to wiper and washer SW TERMINAL 17 to TERMINAL 7 to front wiper motor TERMINAL 5 to TERMINAL 4 to GROUND, and operates the front wiper motor.

SERVICE HINTS

C12 FRONT WIPER AND WASHER SW

2–GROUND : Always continuity
7–GROUND : Approx. **12** volts with the front wiper and washer SW at **LO** position
Approx. **2** to **12** seconds intermittently with the front wiper and washer SW at **INT** position
8–GROUND : Approx. **12** volts with the front wiper and washer SW at **HI** position
16–GROUND : Approx. **12** volts with the ignition SW on unless the front wiper motor at **STOP** position
17–GROUND : Approx. **12** volts the ignition SW at **ON** or **ST** position

F9 FRONT WIPER MOTOR

2–1 : Closed unless the wiper motor at **STOP** position

: PARTS LOCATION

Code	See Page	Code	See Page	Code	See Page
C12	36	J7	37	W1	35
F9	34	J17	37		
J1	37	J18	37		

: JUNCTION BLOCK AND WIRE HARNESS CONNECTOR

Code	See Page	Junction Block and Wire Harness (Connector Location)
2G	31	Engine Room Main Wire and Instrument Panel J/B (Cowl Side Panel LH)
2I	31	Cowl Wire and Instrument Panel J/B (Cowl Side Panel LH)
2N	31	Floor Wire and Instrument Panel J/B (Cowl Side Panel LH)

: CONNECTOR JOINING WIRE HARNESS AND WIRE HARNESS

Code	See Page	Joining Wire Harness and Wire Harness (Connector Location)
IA1	42	Engine Room Main Wire and Cowl Wire (Cowl Side Panel LH)
IH1	42	Floor Wire and Engine Room Main Wire (Left Kick Panel)

: GROUND POINTS

Code	See Page	Ground Points Location
IE	42	Cowl Side Panel LH
IG	42	Cowl Side Panel RH

cardiagn.com

CIGARETTE LIGHTER

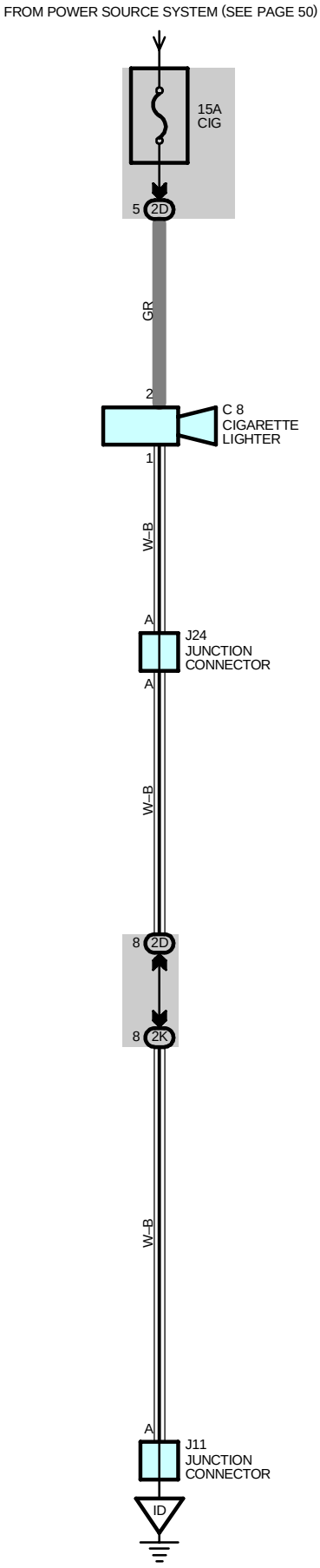

cardiagn.com

SERVICE HINTS

C8 CIGARETTE LIGHTER

2–GROUND : Approx. **12** volts with the ignition SW at **ACC** or **ON** position
1–GROUND : Always continuity

: PARTS LOCATION

Code	See Page	Code	See Page	Code	See Page
C8	36	J11	37	J24	37

: JUNCTION BLOCK AND WIRE HARNESS CONNECTOR

Code	See Page	Junction Block and Wire Harness (Connector Location)
2D	30	Instrument Panel Wire and Instrument Panel J/B (Cowl Side Panel LH)
2K	31	Cowl Wire and Instrument Panel J/B (Cowl Side Panel LH)

: GROUND POINTS

Code	See Page	Ground Points Location
ID	42	Cowl Side Panel LH

cardiagn.com

HORN

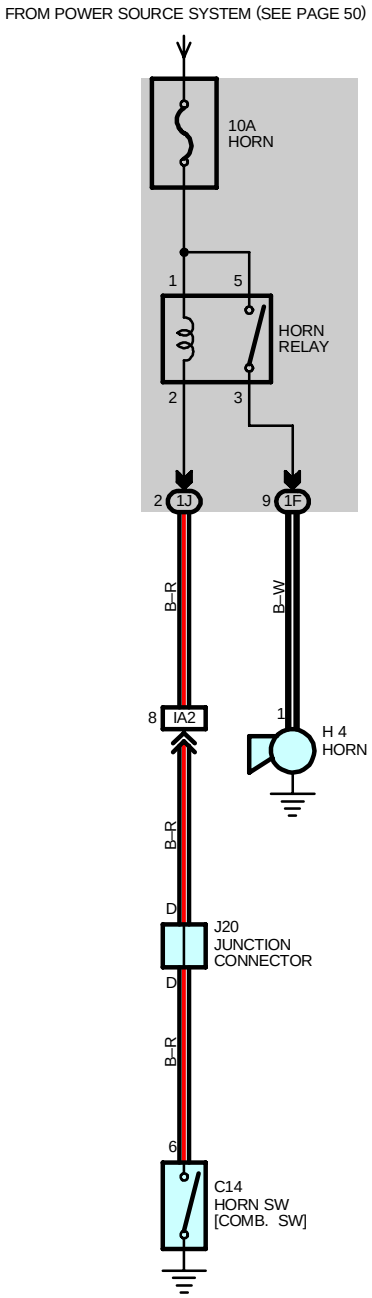

cardiagn.com

SERVICE HINTS

HORN RELAY

5–3 : Closed with the horn SW on

: PARTS LOCATION

Code	See Page	Code	See Page	Code	See Page
C14	36	H4	34	J20	37

: JUNCTION BLOCK AND WIRE HARNESS CONNECTOR

Code	See Page	Junction Block and Wire Harness (Connector Location)
1F	27	Engine Room Main Wire and Engine Room J/B (Engine Compartment Left)
1J		

: CONNECTOR JOINING WIRE HARNESS AND WIRE HARNESS

Code	See Page	Joining Wire Harness and Wire Harness (Connector Location)
IA2	42	Engine Room Main Wire and Cowl Wire (Cowl Side Panel LH)

cardiagn.com

POWER WINDOW

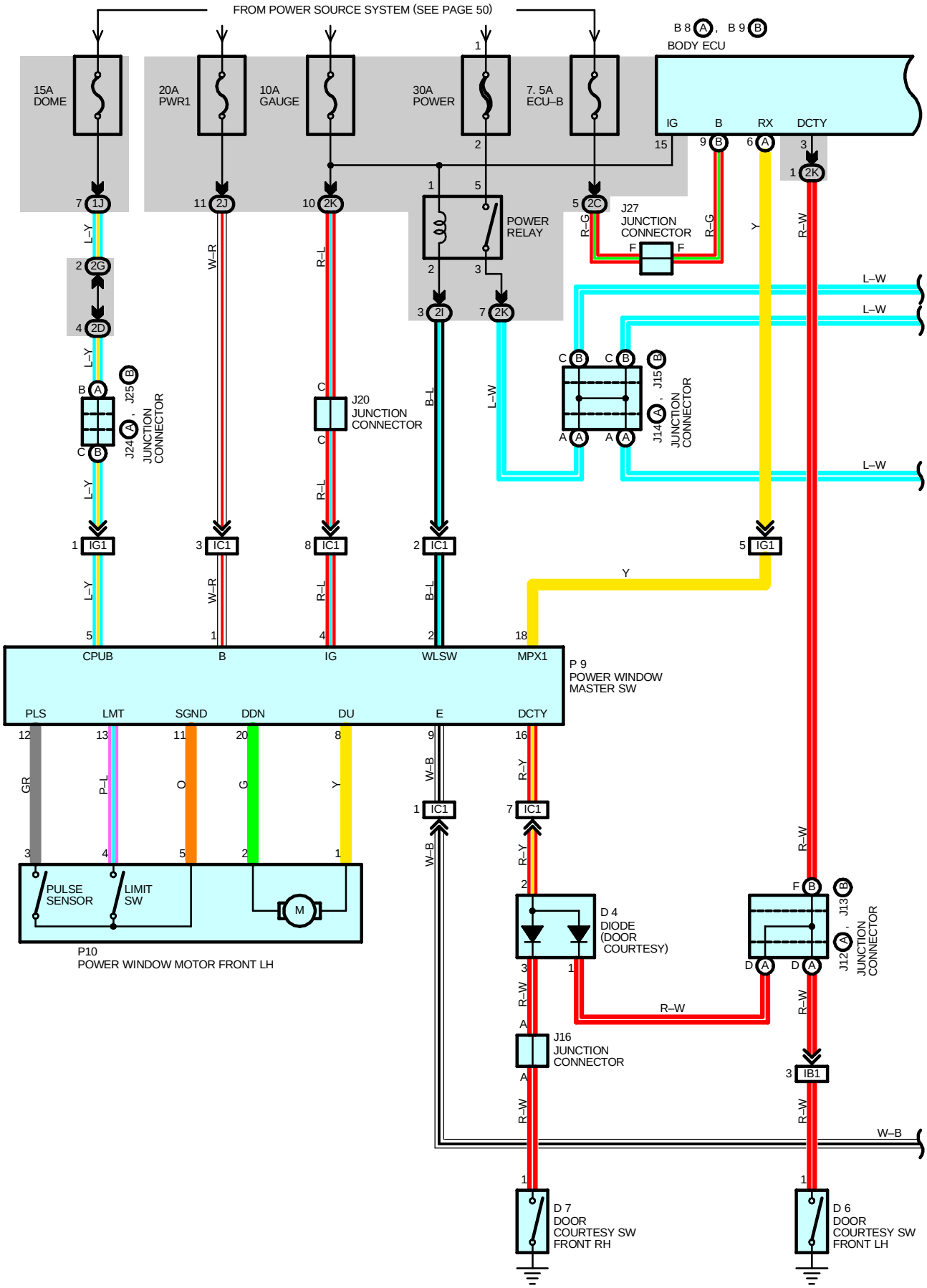

cardiagn.com

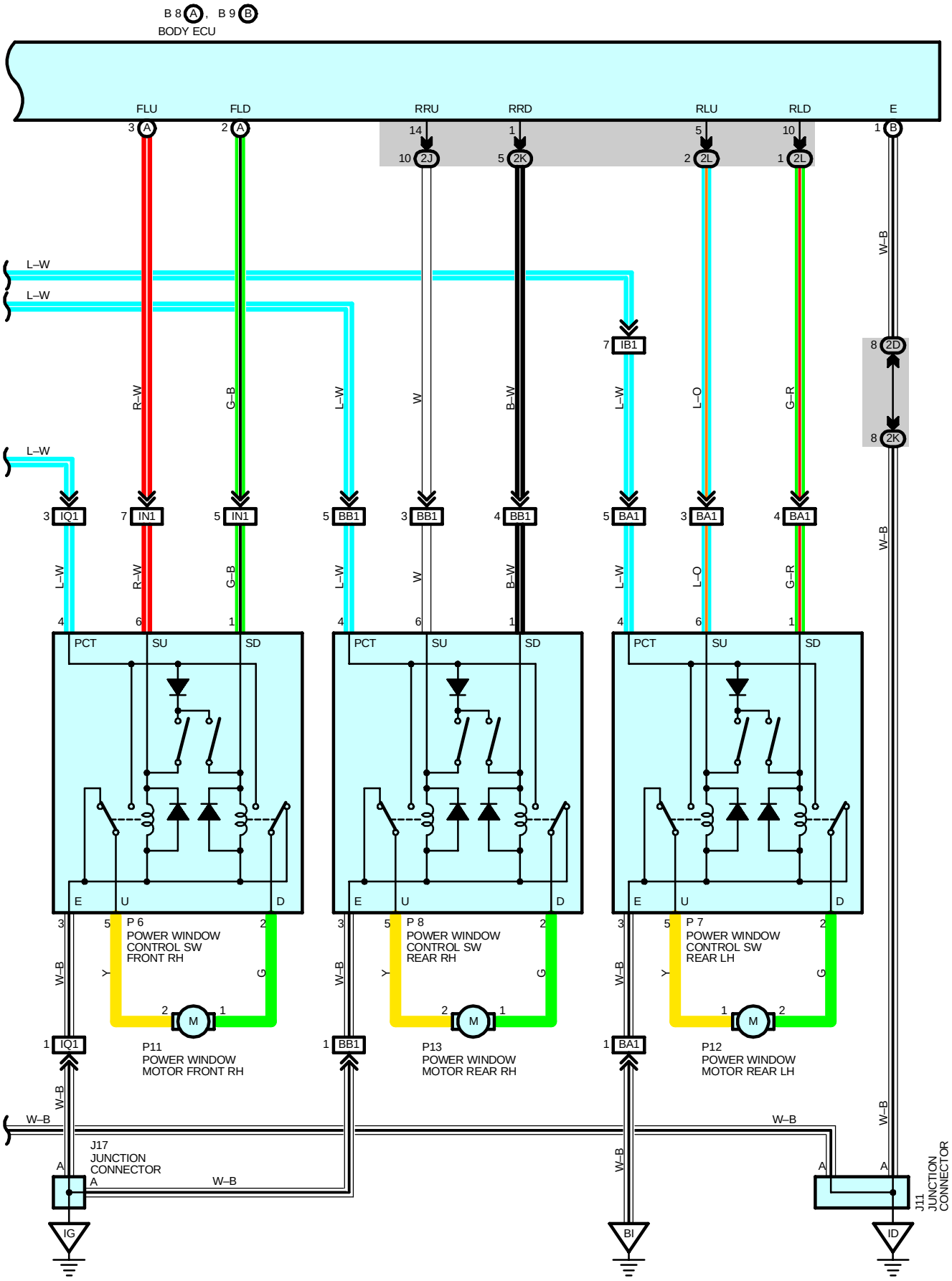

cardiagn.com

POWER WINDOW

SYSTEM OUTLINE

Communication between power window master SW and body ECU is controlled and body ECU recognizes the conditions of each SW to control the operation of windows.

1. MANUAL UP OR DOWN OPERATION (DRIVER'S WINDOW, PASSENGER'S WINDOW)

During you are pushing power window master SW (Driver side) halfway down, the motor operates and the window on the driver's side opens. During you are pulling power window master SW (Driver side) halfway up, the motor operates and the windows on the driver's side closes. The window on the passenger's side opens or closes by pushing down or pulling up power window master SW (Front passenger, rear passenger) or power window SW front RH, rear LH, RH.

2. AUTO UP OR DOWN OPERATION (DRIVER'S WINDOW)

When the power window master SW (Driver side) is fully pushed down, the motor operates and the window on the driver's side automatically opens. When the power window master SW (Driver side) is fully pulled up, the motor operates and the window on the driver's side automatically closes.

3. STOPPING AUTOMATIC WINDOW OPERATION

If you push the power window master SW (Driver side) halfway down during the window on the driver's side is raising automatically, the motor's operation stops. And if you pull the power window master SW (Driver side) halfway up during the window on the driver's side is lowering automatically, the motor's operation stops.

4. KEY OFF POWER WINDOW OPERATION

After the Ignition SW is turned off, the windows can be operated for about 43 seconds. However, the window operation stops when either front doors opens.

5. JAM PROTECTION FUNCTION (DRIVER'S WINDOW)

When any foreign object gets caught during power window UP operation, the motor rotates in the opposite direction to open the window.

SERVICE HINTS

P9 POWER WINDOW MASTER SW

1–GROUND : Always approx. **12** volts
4–GROUND : Approx. **12** volts with the ignition SW at **ON** position
9–GROUND : Always continuity

B8 (A), B9 (B) BODY ECU

15–GROUND : Approx. **12** volts with the ignition SW at **ON** position
(B)9–GROUND : Always approx. 12 volts

: PARTS LOCATION

Code		See Page	Code		See Page	Code	See Page
B8	A	36	J15	B	37	P7	39
B9	B	36	J16		37	P8	39
D4		36	J17		37	P9	39
D6		38	J20		37	P10	39
D7		38	J24	A	37	P11	39
J12	A	37	J25	B	37	P12	39
J13	B	37	J27		37	P13	39
J14	A	37	P6		39		

: JUNCTION BLOCK AND WIRE HARNESS CONNECTOR

Code	See Page	Junction Block and Wire Harness (Connector Location)
1J	27	Engine Room Main Wire and Engine Room J/B (Engine Compartment Left)
2C	30	Instrument Panel Wire and Instrument Panel J/B (Cowl Side Panel LH)
2D		
2G	31	Engine Room Main Wire and Instrument Panel J/B (Cowl Side Panel LH)
2I	31	Cowl Wire and Instrument Panel J/B (Cowl Side Panel LH)
2J		
2K		
2L	31	Floor Wire and Instrument Panel J/B (Cowl Side Panel LH)

cardiagn.com

: CONNECTOR JOINING WIRE HARNESS AND WIRE HARNESS

Code	See Page	Joining Wire Harness and Wire Harness (Connector Location)
IB1	42	Floor Wire and Cowl Wire (Cowl Side Panel LH)
IC1	42	Front Door LH Wire and Cowl Wire (Left Kick Panel)
IG1	42	Front Door LH Wire and Instrument Panel Wire (Left Kick Panel)
IN1	44	Front Door RH Wire and Instrument Panel Wire (Right Kick Panel)
IQ1	44	Front Door RH Wire and Cowl Wire (Right Kick Panel)
BA1	46	Rear Door No.2 Wire and Floor Wire (Center Pillar LH)
BB1	46	Rear Door No.1 Wire and Cowl Wire (Center Pillar RH)

: GROUND POINTS

Code	See Page	Ground Points Location
IG	42	Cowl Side Panel RH
BI	46	Left Side of Rear Pillar

cardiagn.com

REMOTE CONTROL MIRROR

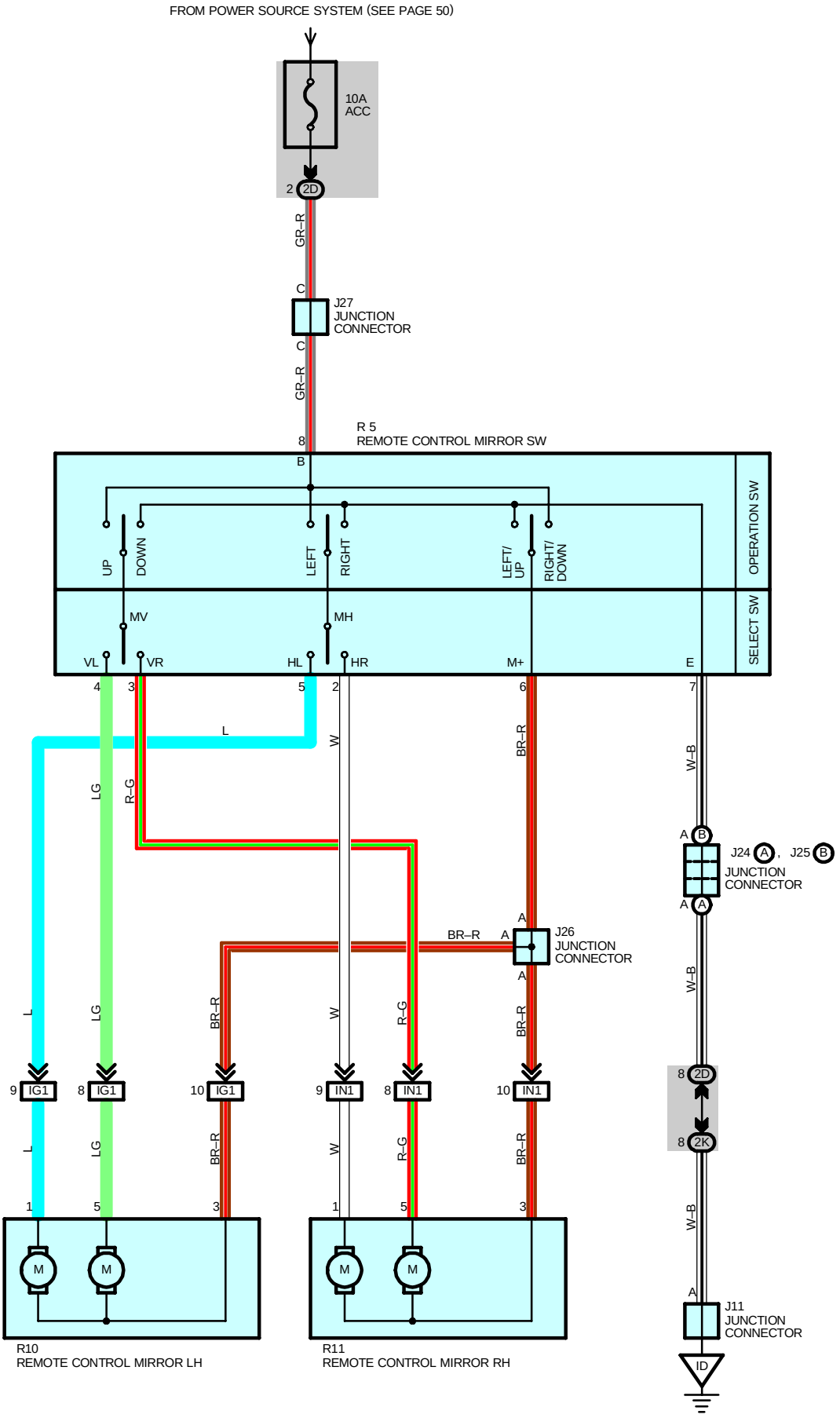

cardiagn.com

SERVICE HINTS

R5 REMOTE CONTROL MIRROR SW

8–GROUND : Approx. **12** volts with the ignition SW at **ACC** or **ON** position
6–7 : Continuity with the operation SW at **UP** or **LEFT** position
8–6 : Continuity with the operation SW at **DOWN** or **RIGHT** position

: PARTS LOCATION

Code		See Page	Code	See Page	Code	See Page
J11		37	J26	37	R10	39
J24	A	37	J27	37	R11	39
J25	B	37	R5	37		

: JUNCTION BLOCK AND WIRE HARNESS CONNECTOR

Code	See Page	Junction Block and Wire Harness (Connector Location)
2D	30	Instrument Panel Wire and Instrument Panel J/B (Cowl Side Panel LH)
2K	31	Cowl Wire and Instrument Panel J/B (Cowl Side Panel LH)

: CONNECTOR JOINING WIRE HARNESS AND WIRE HARNESS

Code	See Page	Joining Wire Harness and Wire Harness (Connector Location)
IG1	42	Front Door LH Wire and Instrument Panel Wire (Left Kick Panel)
IN1	44	Front Door RH Wire and Instrument Panel Wire (Right Kick Panel)

: GROUND POINTS

Code	See Page	Ground Points Location
ID	42	Cowl Side Panel LH

cardiagn.com

SHIFT LOCK

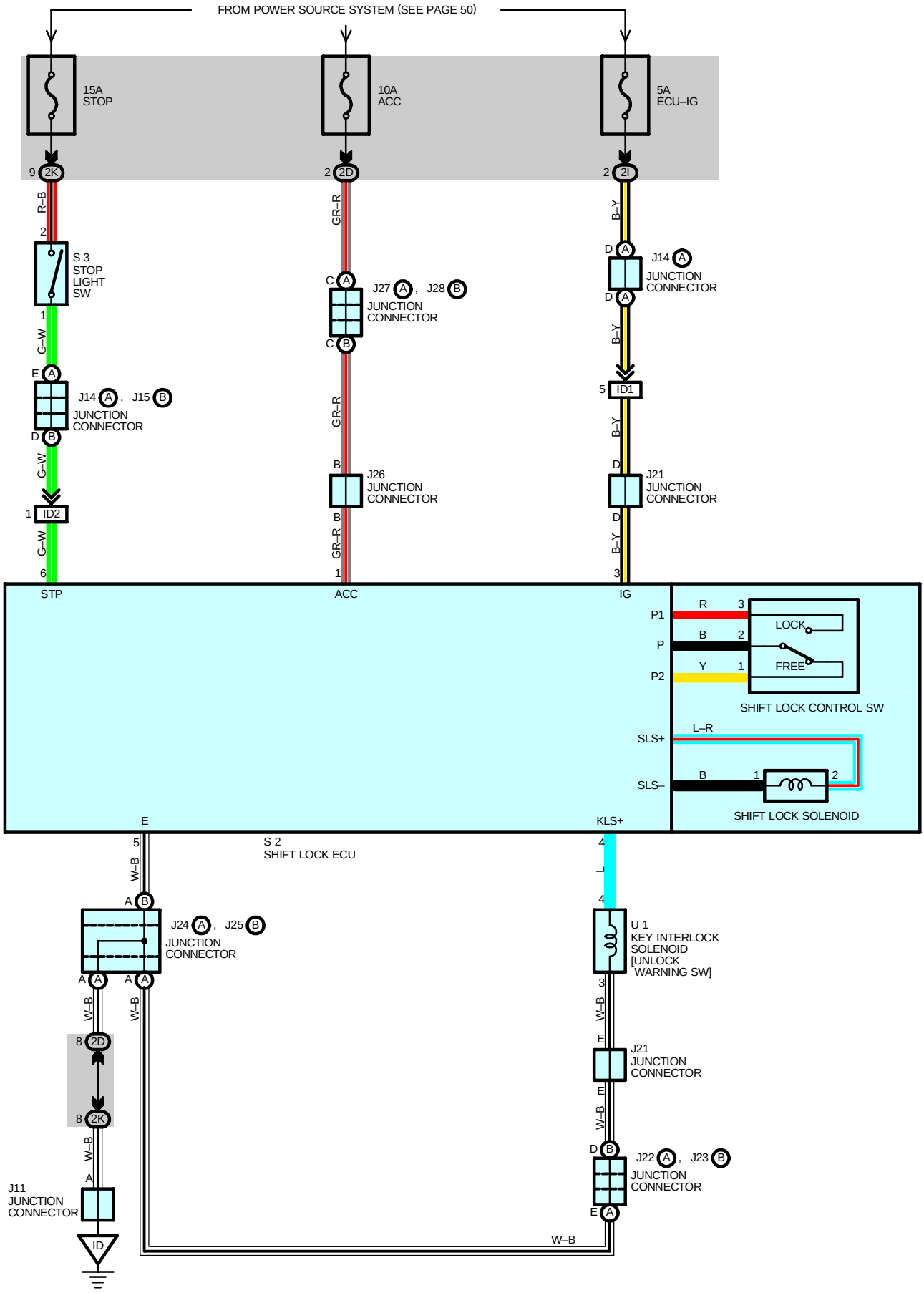

cardiagn.com

SYSTEM OUTLINE

When the ignition SW is turned to ACC position the current from the ACC fuse flows to TERMINAL 1 of the shift lock ECU, in the ON position, the current from the ECU–IG fuse flows to TERMINAL 3 of the ECU.

1. SHIFT LOCK MECHANISM

With the ignition SW on, when a signal that the brake pedal is depressed (Stop light SW on) and a signal that the shift lever is put in P position (Continuity between P1 and P of the shift lock control SW) is input to the ECU, the ECU operates and current flows from TERMINAL 3 of the ECU to TERMINAL SLS+ of the shift lock solenoid to solenoid to TERMINAL SLS– to TERMINAL 5 of the ECU to GROUND. This causes the shift lock solenoid to turn on (Plate stopper disengages) and the shift lever can shift into position other than the P.

2. KEY INTERLOCK MECHANISM

With the ignition SW ON or ACC position, when the shift lever is put in P position (No continuity between P2 and P of shift lock control SW), the current flowing from TERMINAL 4 of the ECU to the key interlock solenoid is cut off. This causes the key interlock solenoid to turn off (Lock lever disengages from LOCK position) and the ignition key can be turned from ACC to LOCK position.

SERVICE HINTS

S2 SHIFT LOCK ECU

1–GROUND : Approx. **12** volts with the ignition SW at **ACC** or **ON** position
3–GROUND : Approx. **12** volts with the ignition SW at **ON** position
5–GROUND : Always continuity
6–GROUND : Approx. **12** volts with the brake pedal depressed

S3 STOP LIGHT SW

2–1 : Closed with the brake pedal depressed

: PARTS LOCATION

Code		See Page	Code		See Page	Code		See Page
J11		37	J23	B	37	J28	B	37
J14	A	37	J24	A	37	S2		37
J15	B	37	J25	B	37	S3		37
J21		37	J26		37	U1		37
J22	A	37	J27	A	37			

: JUNCTION BLOCK AND WIRE HARNESS CONNECTOR

Code	See Page	Junction Block and Wire Harness (Connector Location)
2D	30	Instrument Panel Wire and Instrument Panel J/B (Cowl Side Panel LH)
2I	31	Cowl Wire and Instrument Panel J/B (Cowl Side Panel LH)
2K		

: CONNECTOR JOINING WIRE HARNESS AND WIRE HARNESS

Code	See Page	Joining Wire Harness and Wire Harness (Connector Location)
ID1	42	Instrument Panel Wire and Cowl Wire (Left Kick Panel)
ID2		

: GROUND POINTS

Code	See Page	Ground Points Location
ID	42	Cowl Side Panel LH

cardiagn.com

DOOR LOCK CONTROL

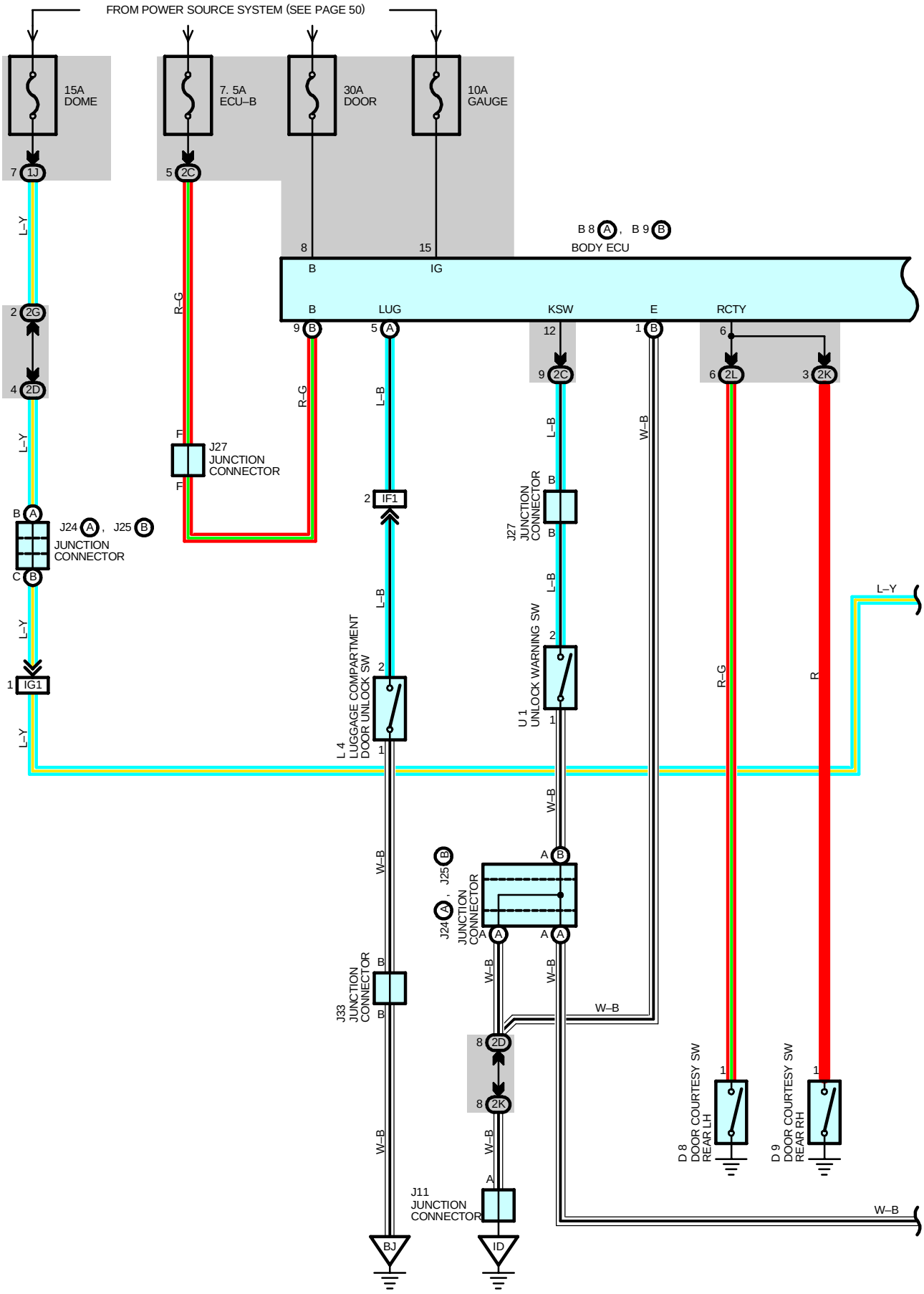

cardiagn.com

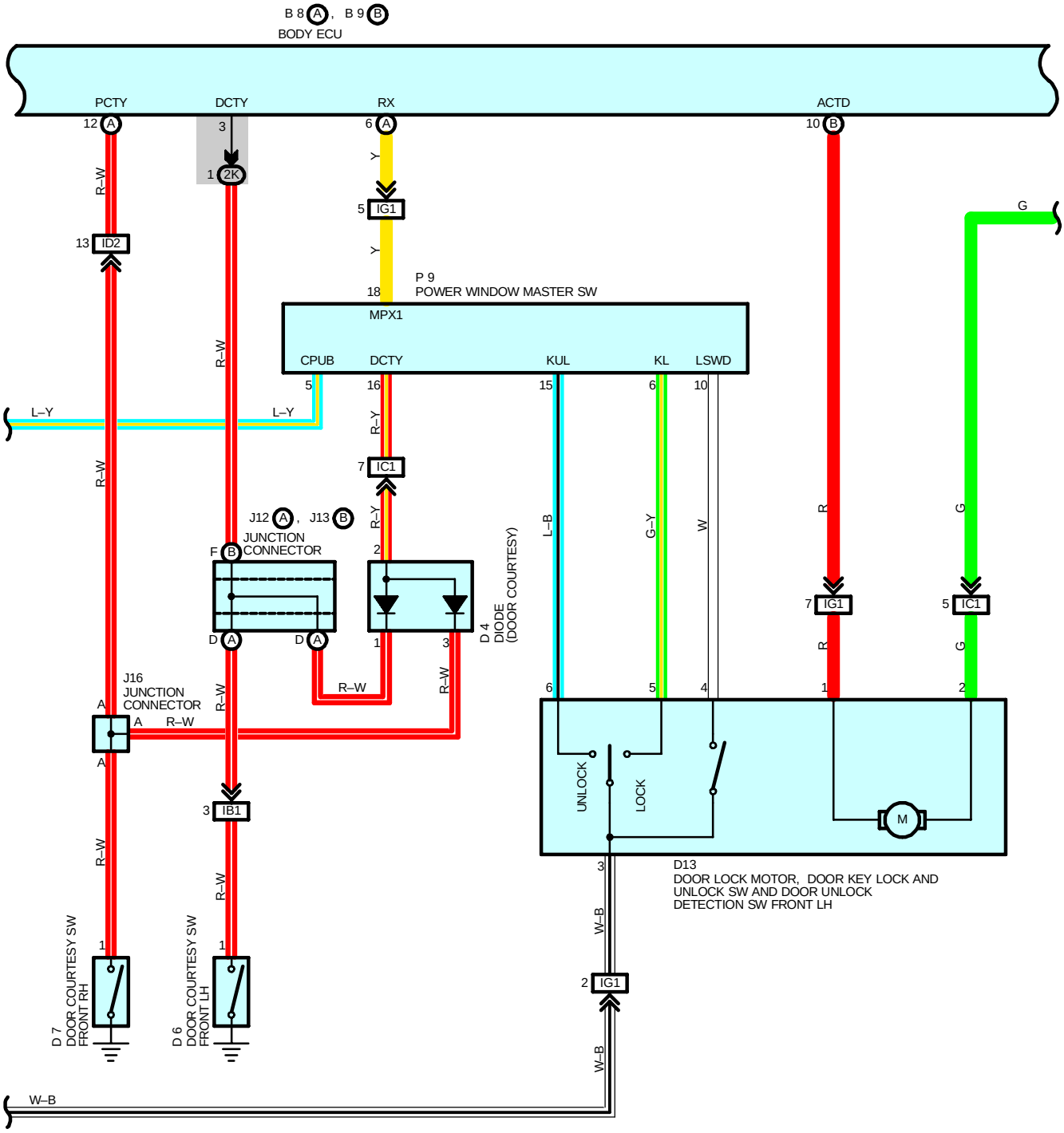

cardiagn.com

DOOR LOCK CONTROL

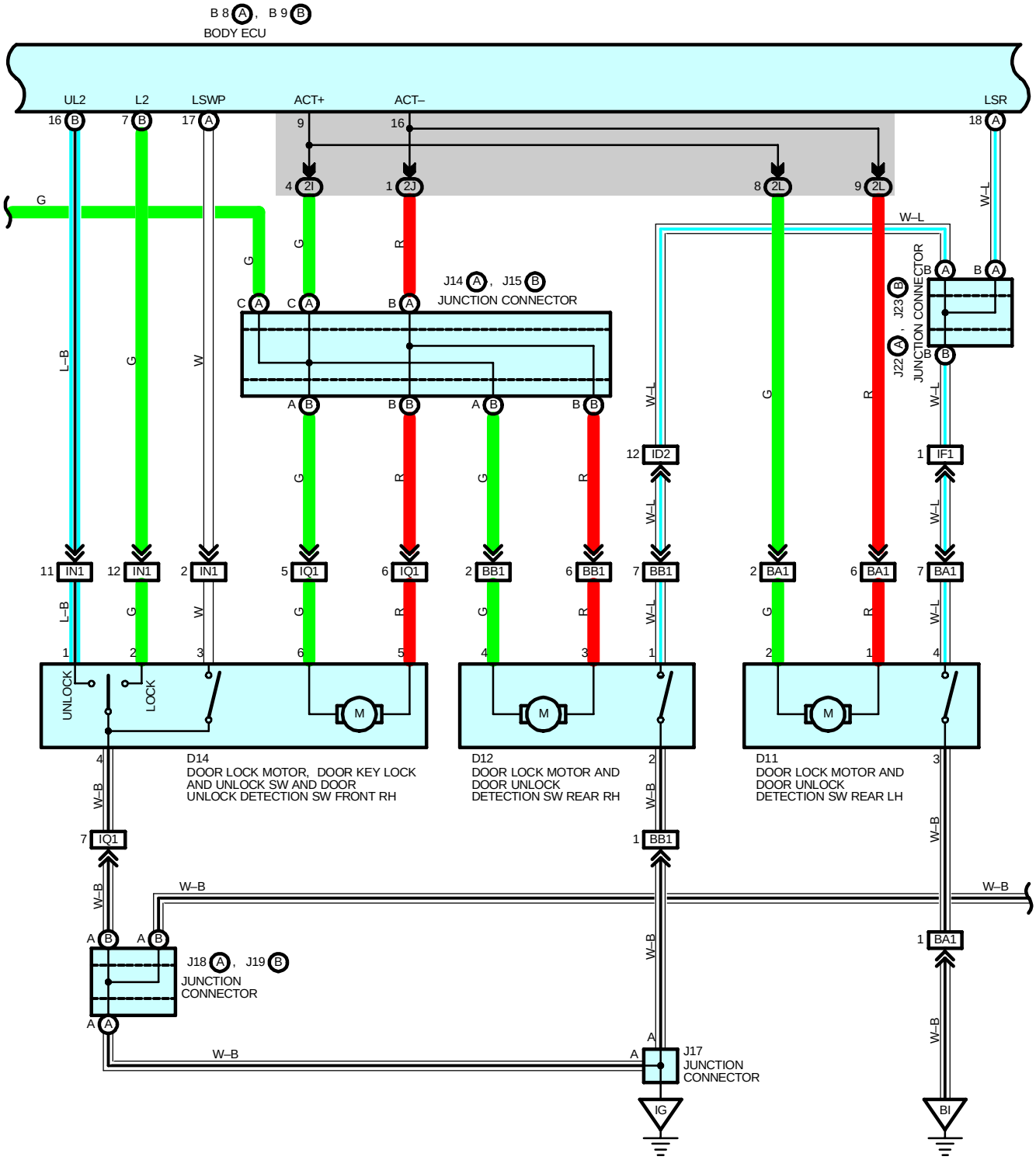

cardiagn.com

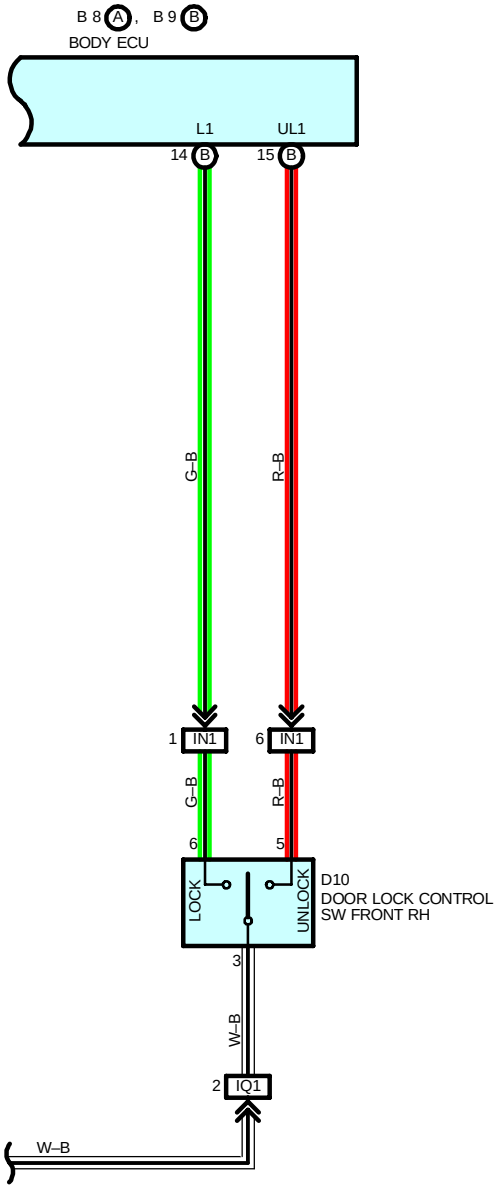

cardiagn.com

DOOR LOCK CONTROL

SYSTEM OUTLINE

The current is always sent from DOOR fuse to TERMINAL B of body ECU. When ignition SW is turned on, the current is sent from GAUGE fuse to TERMINAL IG of the body ECU.

1. MANUAL LOCK OPERATION

When the door lock control SW (Power window master SW) is turned to LOCK position, the lock signal from TERMINAL MPX1 of power window master SW is input to TERMINAL RX of body ECU to operate ECU. The current is sent from TERMINAL ACT+ of ECU to each motor and the motor locks the doors by the current sent from TERMINAL ACT– of ECU to GROUND.

2. MANUAL UNLOCK OPERATION

When the door lock control SW (Power window master SW) is turned to UNLOCK position, the unlock signal from TERMINAL MPX1 of power window master SW is input to TERMINAL RX of body ECU to operate ECU. The current is sent from TERMINAL ACT– of ECU to each motor and the motor unlocks the doors by the current sent from TERMINAL ACT+ of ECU to GROUND.

3. DOOR KEY LOCK AND UNLOCK OPERATION

* Lock operation from the driver's side door
  When the driver's side door is locked using the ignition key, all the doors are locked.
* Unlock operation from the driver's side door
  When the driver's side door is unlocked once using the ignition key, only the driver's side door is unlocked. If this operation is repeated within 3 seconds, all the other doors are unlocked.
* Lock operation from the front passenger's side door
  When the front passenger's side door is locked using the ignition key, all the doors are locked.
* Unlock operation from the front passenger's side door
  When the front passenger's side door is unlocked using the ignition key, all the doors are unlocked

SERVICE HINTS

B8 (A), B9 (B) BODY ECU

15–GROUND : Approx. **12** volts with the ignition SW at **ON** position
8–GROUND : Always approx. **12** volts
(B) 1–GROUND : Always continuity

D6, D7, D8, D9 DOOR COURTESY SW FRONT LH, RH, REAR LH, RH

1–GROUND : Closed with each of the door open

U1 UNLOCK WARNING SW

1–2 : Closed with the ignition key in the cylinder

○ : PARTS LOCATION

Code		See Page	Code		See Page	Code		See Page
B8	A	36	D13		38	J19	B	37
B9	B	36	D14		38	J22	A	37
D4		36	J11		37	J23	B	37
D6		38	J12	A	37	J24	A	37
D7		38	J13	B	37	J25	B	37
D8		38	J14	A	37	J27		37
D9		38	J15	B	37	J33		38
D10		38	J16		37	L4		38
D11		38	J17		37	P9		39
D12		38	J18	A	37	U1		37

cardiagn.com

: JUNCTION BLOCK AND WIRE HARNESS CONNECTOR

Code	See Page	Junction Block and Wire Harness (Connector Location)
1J	27	Engine Room Main Wire and Engine Room J/B (Engine Compartment Left)
2C	30	Instrument Panel Wire and Instrument Panel J/B (Cowl Side Panel LH)
2D		
2G	31	Engine Room Main Wire and Instrument Panel J/B (Cowl Side Panel LH)
2I	31	Cowl Wire and Instrument Panel J/B (Cowl Side Panel LH)
2J		
2K		
2L	31	Floor Wire and Instrument Panel J/B (Cowl Side Panel LH)

: CONNECTOR JOINING WIRE HARNESS AND WIRE HARNESS

Code	See Page	Joining Wire Harness and Wire Harness (Connector Location)
IB1	42	Floor Wire and Cowl Wire (Cowl Side Panel LH)
IC1	42	Front Door LH Wire and Cowl Wire (Left Kick Panel)
ID2	42	Instrument Panel Wire and Cowl Wire (Left Kick Panel)
IF1	42	Instrument Panel Wire and Floor Wire (Left Kick Panel)
IG1	42	Front Door LH Wire and Instrument Panel Wire (Left Kick Panel)
IN1	44	Front Door RH Wire and Instrument Panel Wire (Right Kick Panel)
IQ1	44	Front Door RH Wire and Cowl Wire (Right Kick Panel)
BA1	46	Rear Door No.2 Wire and Floor Wire (Center Pillar LH)
BB1	46	Rear Door No.1 Wire and Cowl Wire (Center Pillar RH)

: GROUND POINTS

Code	See Page	Ground Points Location
ID	42	Cowl Side Panel LH
IG	42	Cowl Side Panel RH
BI	46	Left Side of Rear Pillar
BJ	46	Right Side of Rear Pillar

cardiagn.com

WIRELESS DOOR LOCK CONTROL

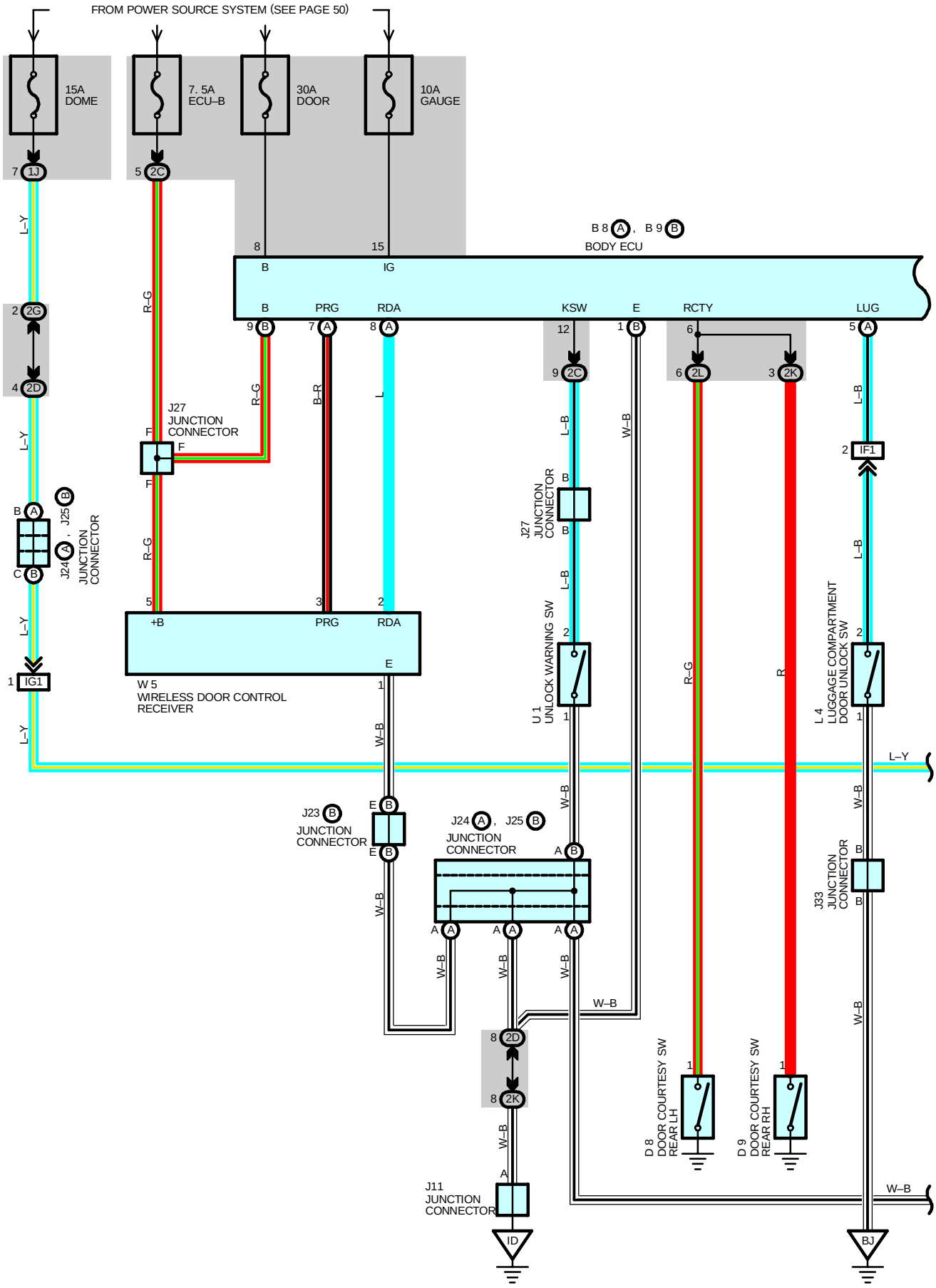

cardiagn.com

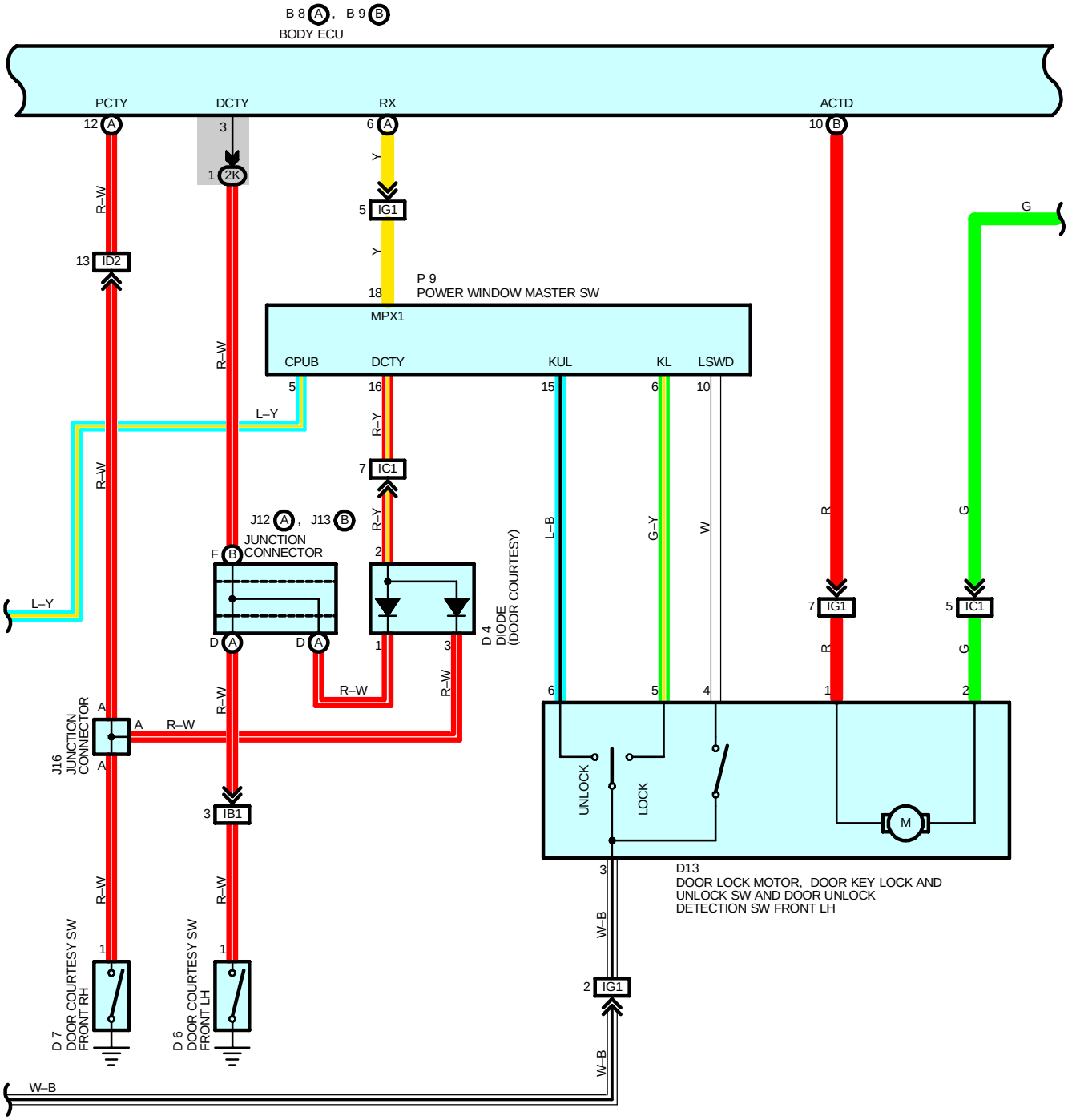

cardiagn.com

WIRELESS DOOR LOCK CONTROL

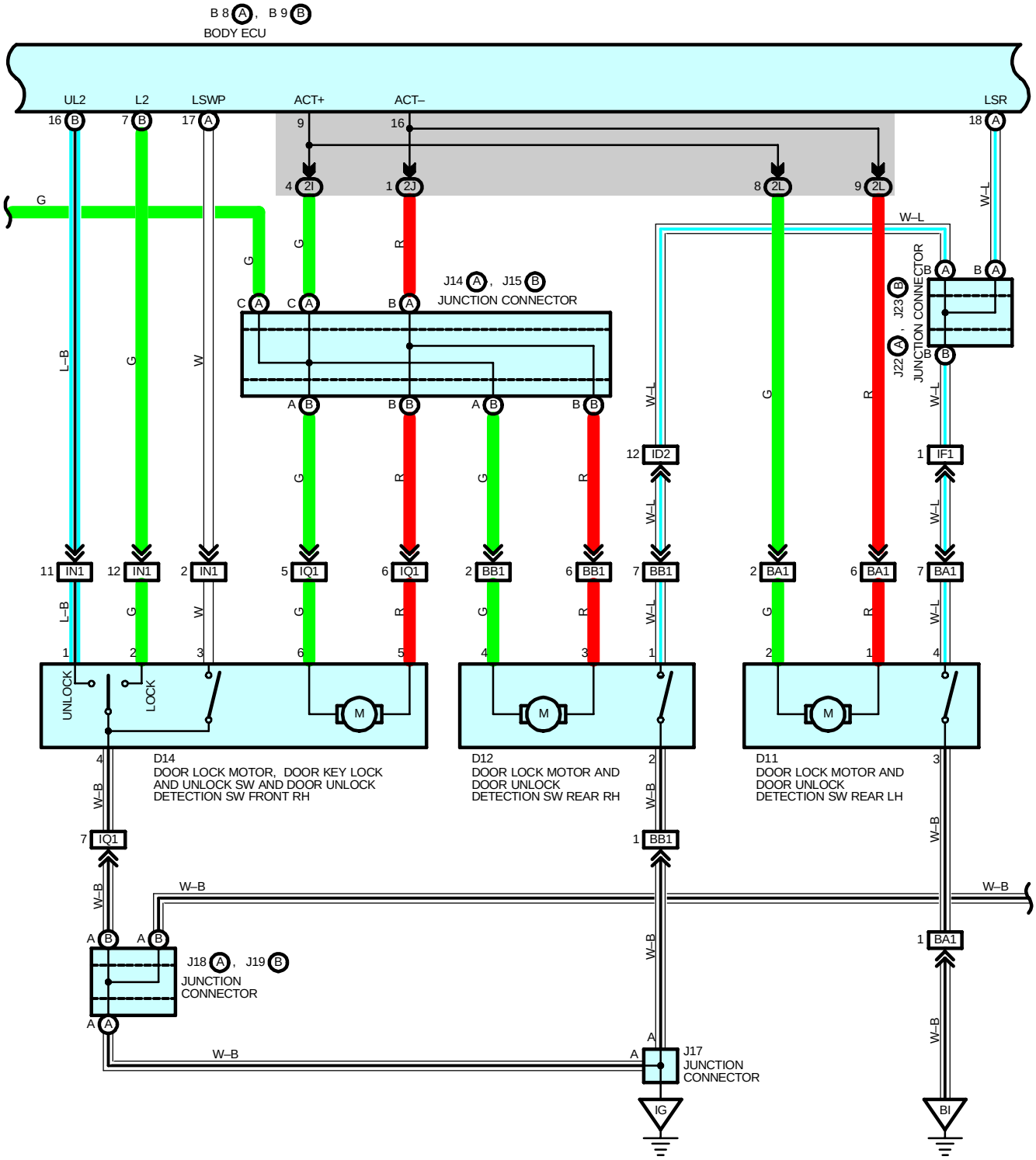

cardiagn.com

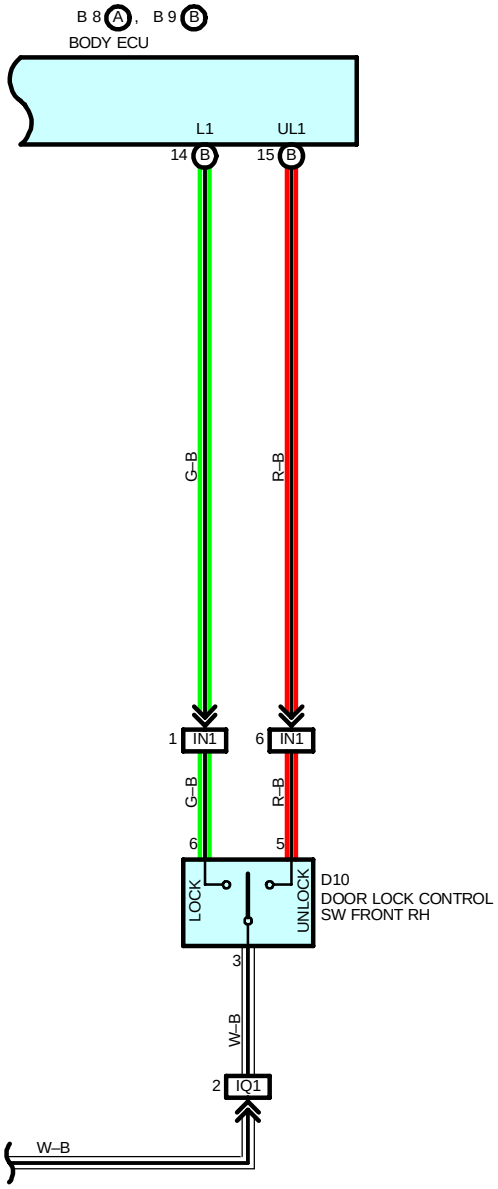

cardiagn.com

WIRELESS DOOR LOCK CONTROL

SYSTEM OUTLINE

The current is always sent from DOOR fuse to TERMINAL B of body ECU. At the same time, the current is always sent from DOME fuse to TERMINAL CPUB of power window master SW, and from ECU–B fuse to wireless door lock receiver. When ignition SW is turned on, the current is sent from GAUGE fuse to TERMINAL IG of body ECU.

1. WIRELESS DOOR LOCK OR UNLOCK NORMAL OPERATION

∗ Lock operation
When the LOCK SW of the transmitter is pushed, all the doors are locked.
∗ Unlock operation
When the UNLOCK SW of the transmitter is pushed, all the doors are unlocked.

2. AUTOMATIC LOCK OPERATION

After all the doors are unlocked by pushing the UNLOCK SW of the transmitter, unless each of the doors is opened or the ignition key is inserted, all the doors are locked again.

3. VISUAL CONFIRMATION OF LOCK OR UNLOCK FUNCTION

When doors are locked by using the transmitter, the taillight and parking lights blink once. When doors are unlocked by using the transmitter, the taillights and parking lights blink twice. If UNLOCK SW of the transmitter is pushed while all the doors are locked, doors are unlocked and the room lights are turned on simultaneously.

4. WIRELESS CONTROL STOP FUNCTION

If the following situations occur, wireless door lock function does not operate.
∗ When each of the doors opens. (Door courtesy SW is on)
∗ When ignition key is inserted to ignition SW. (Unlock warning SW is on)
∗ When ignition SW is on.

5. REPEAT FUNCTION

If the doors are not locked after the lock signal is out put from transmitter by pushing LOCK SW, the lock signal is sent again to lock the doors.

6. PANIC MODE FUNCTION

When the panic SW of the transmitter is pushed, the horn comes on, and the headlight and taillight flashes.

SERVICE HINTS

B8 (A), B9 (B) BODY ECU

15–GROUND : Approx. **12** volts with the ignition SW at **ON** position
8–GROUND : Always approx. **12** volts
(B) 1–GROUND : Always continuity

W5 WIRELESS DOOR LOCK CONTROL RECEIVER

5–GROUND : Always approx. **12** volts
1–GROUND : Always continuity

U1 UNLOCK WARNING SW

2–1 : Closed with the ignition key in the cylinder

○ : PARTS LOCATION

Code		See Page	Code		See Page	Code		See Page
B8	A	36	D14		38	J23	B	37
B9	B	36	J11		37	J24	A	37
D4		36	J12	A	37	J25	B	37
D6		38	J13	B	37	J27		37
D7		38	J14	A	37	J33		38
D8		38	J15	B	37	L4		38
D9		38	J16		37	P9		39
D10		38	J17		37	U1		37
D11		38	J18	A	37	W5		37
D12		38	J19	B	37			
D13		38	J22	A	37			

cardiagn.com

: JUNCTION BLOCK AND WIRE HARNESS CONNECTOR

Code	See Page	Junction Block and Wire Harness (Connector Location)
1J	27	Engine Room Main Wire and Engine Room J/B (Engine Compartment Left)
2C	30	Instrument Panel Wire and Instrument Panel J/B (Cowl Side Panel LH)
2D		
2G	31	Engine Room Main Wire and Instrument Panel J/B (Cowl Side Panel LH)
2I	31	Cowl Wire and Instrument Panel J/B (Cowl Side Panel LH)
2J		
2K		
2L	31	Floor Wire and Instrument Panel J/B (Cowl Side Panel LH)

: CONNECTOR JOINING WIRE HARNESS AND WIRE HARNESS

Code	See Page	Joining Wire Harness and Wire Harness (Connector Location)
IB1	42	Floor Wire and Cowl Wire (Cowl Side Panel LH)
IC1	42	Front Door LH Wire and Cowl Wire (Left Kick Panel)
ID2	42	Instrument Panel Wire and Cowl Wire (Left Kick Panel)
IF1	42	Instrument Panel Wire and Floor Wire (Left Kick Panel)
IG1	42	Front Door LH Wire and Instrument Panel Wire (Left Kick Panel)
IN1	44	Front Door RH Wire and Instrument Panel Wire (Right Kick Panel)
IQ1	44	Front Door RH Wire and Cowl Wire (Right Kick Panel)
BA1	46	Rear Door No.2 Wire and Floor Wire (Center Pillar LH)
BB1	46	Rear Door No.1 Wire and Cowl Wire (Center Pillar RH)

: GROUND POINTS

Code	See Page	Ground Points Location
ID	42	Cowl Side Panel LH
IG	42	Cowl Side Panel RH
BI	46	Left Side of Rear Pillar
BJ	46	Right Side of Rear Pillar

cardiagn.com

THEFT DETERRENT

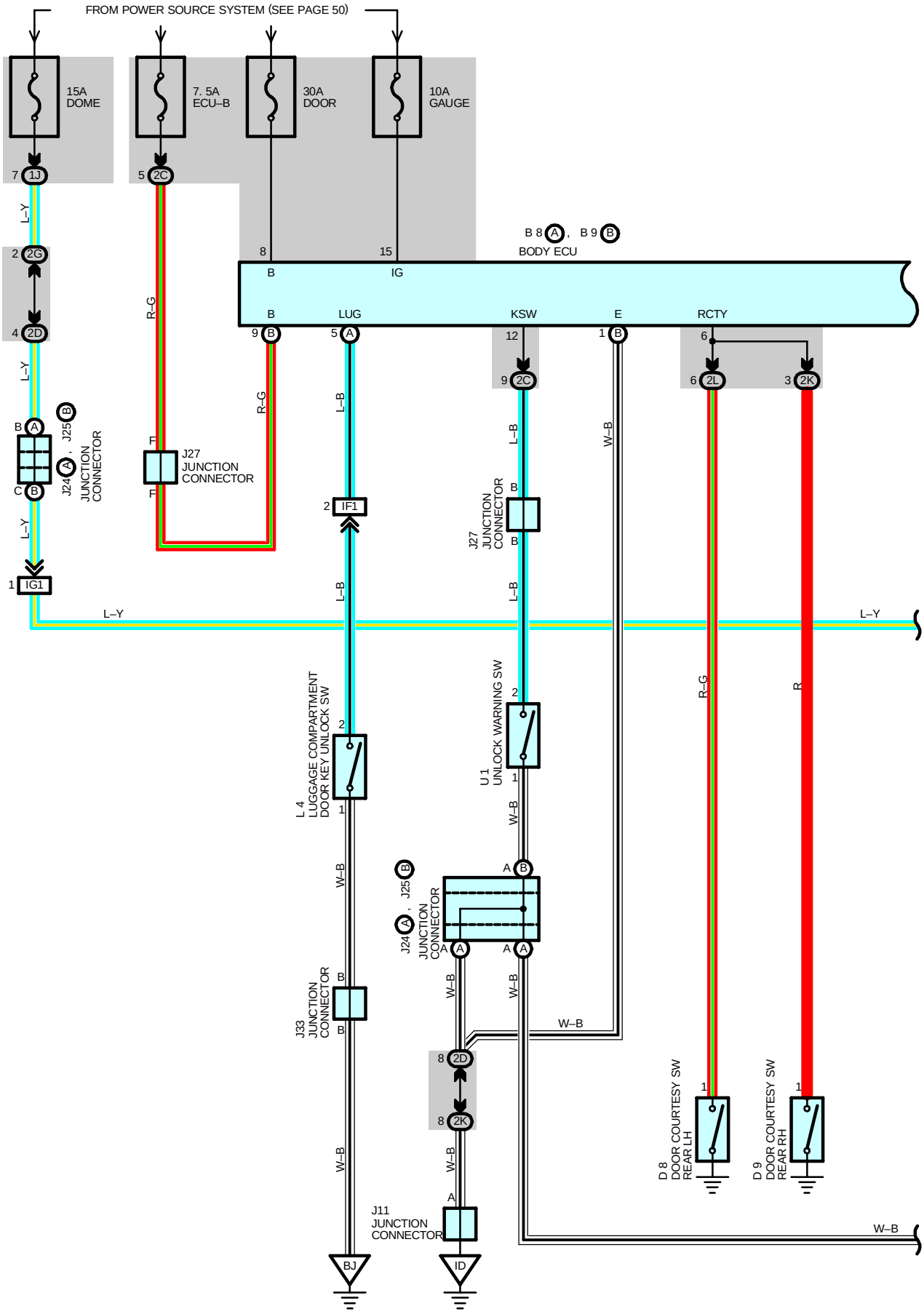

cardiagn.com

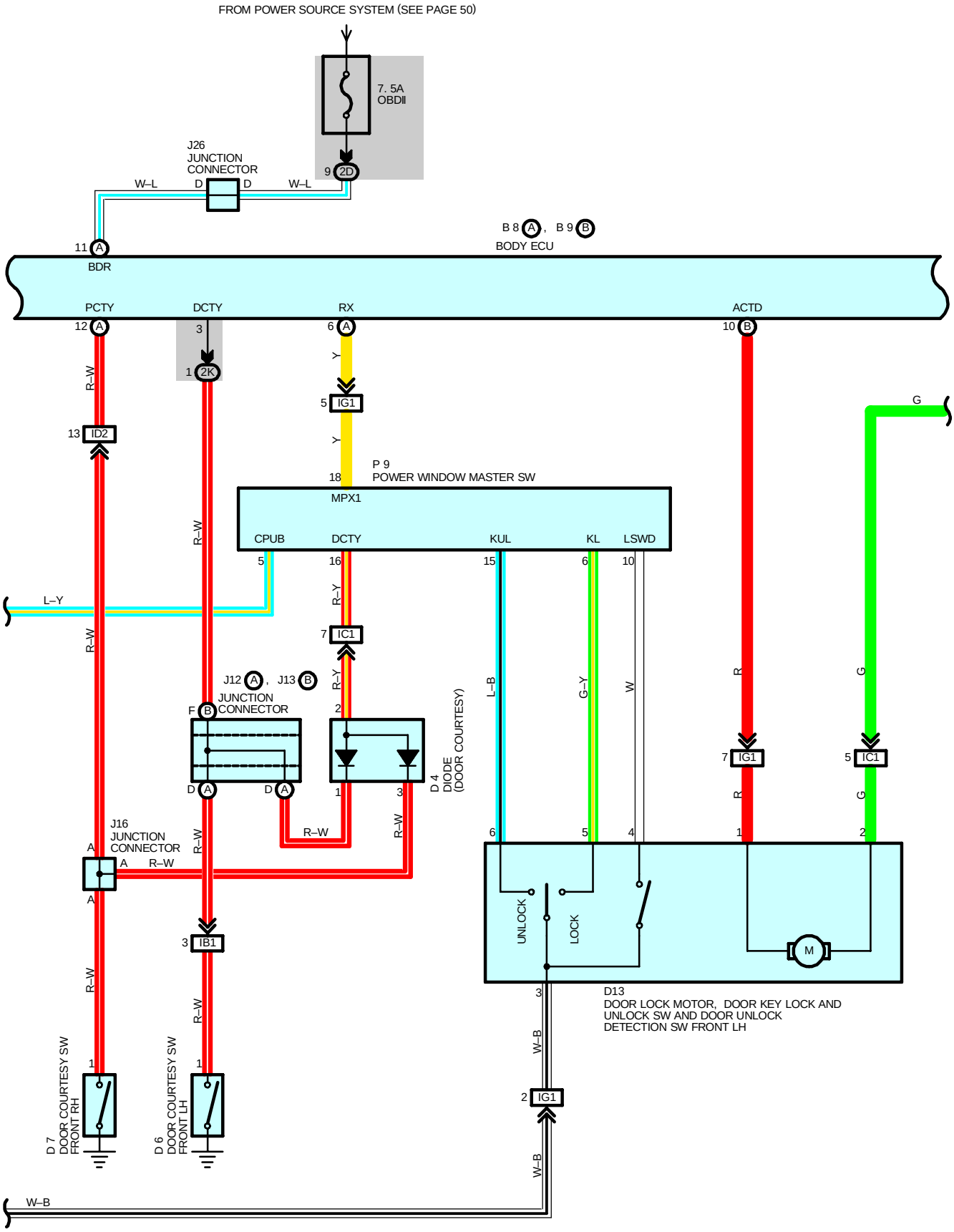

cardiagn.com

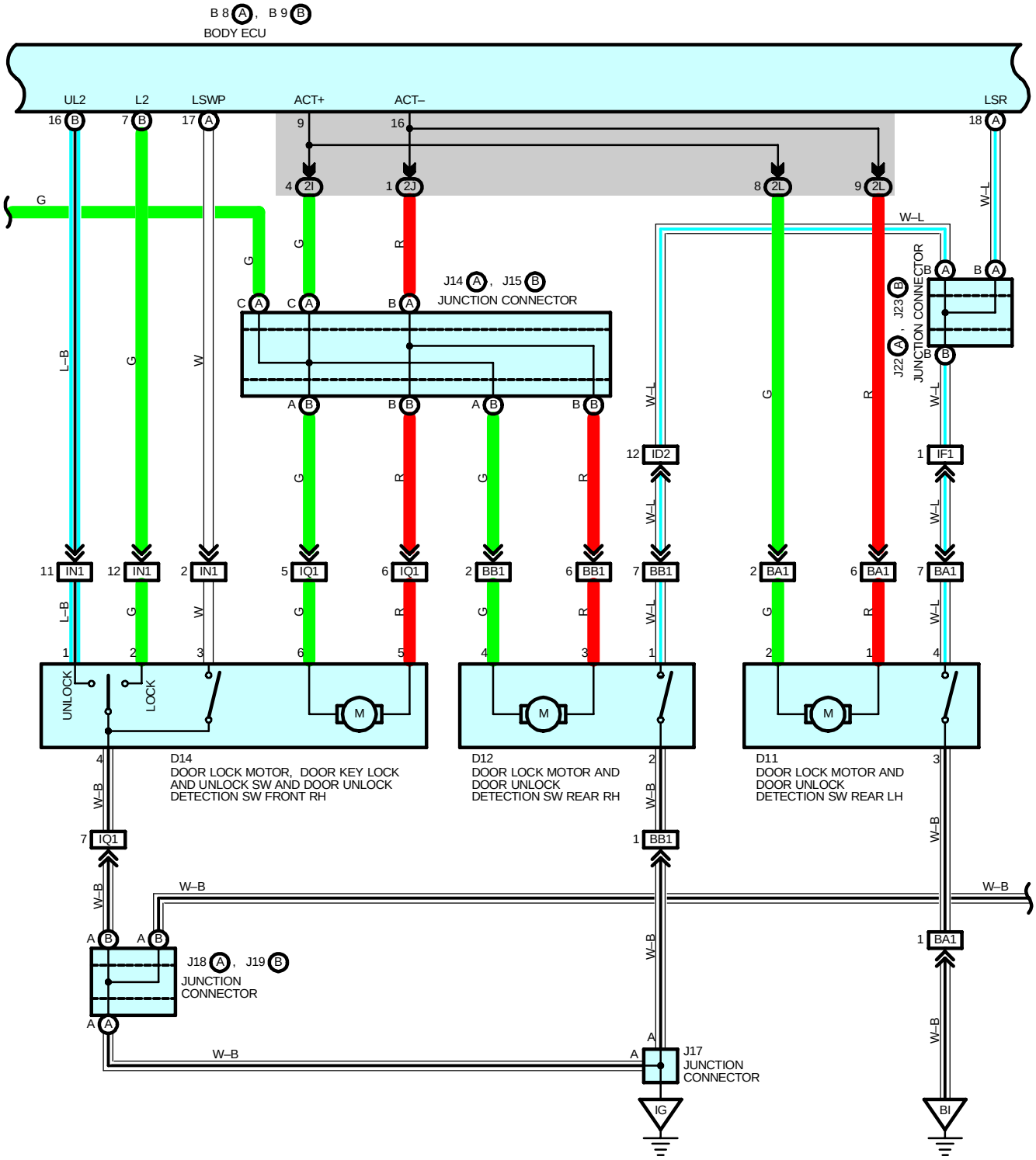

cardiagn.com

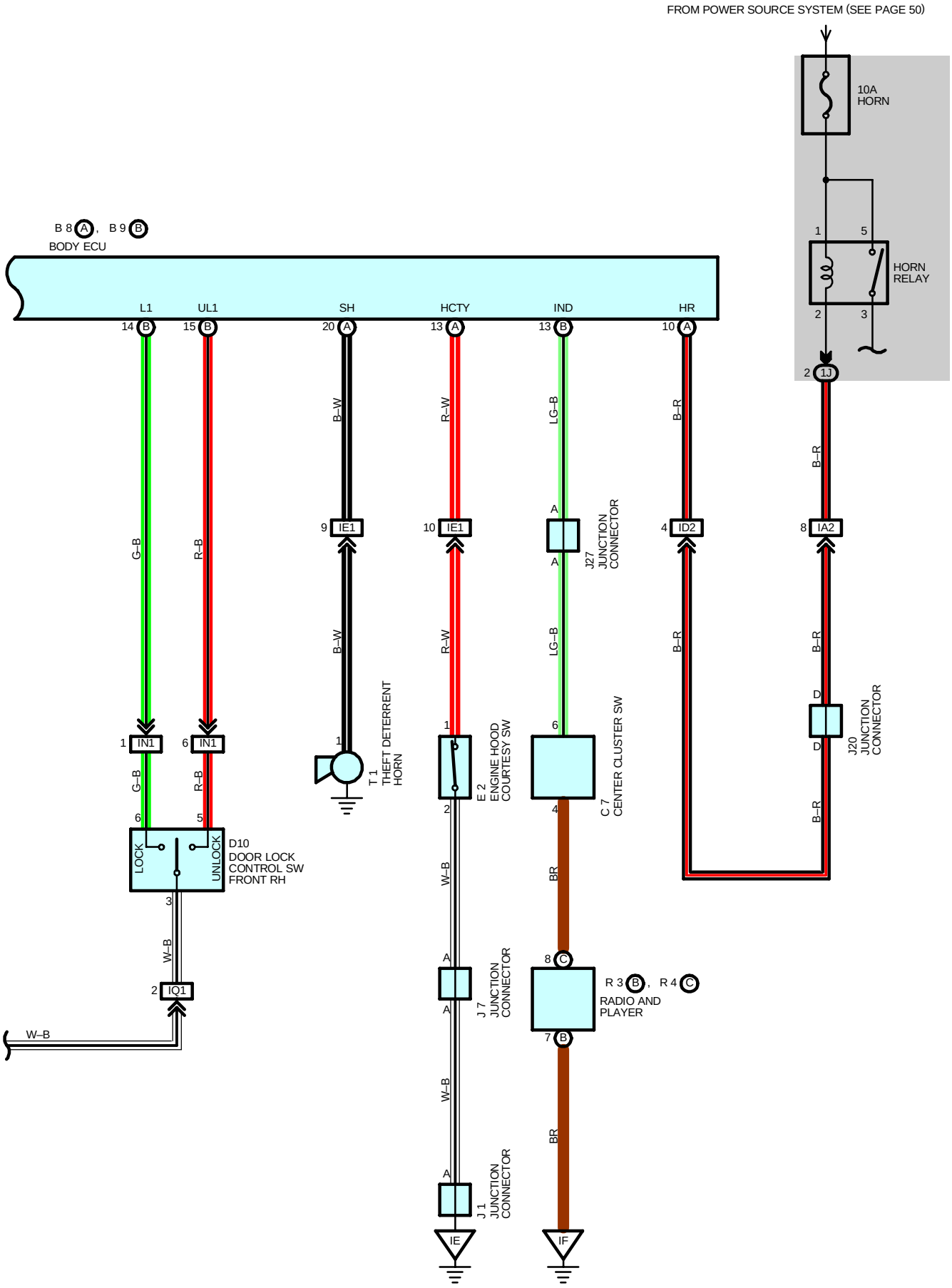

cardiagn.com

SERVICE HINTS

D13 DOOR KEY LOCK AND UNLOCK SW AND DOOR UNLOCK DETECTION SW FRONT LH
6–3 : Closed with door lock cylinder unlocked with key
5–3 : Closed with door lock cylinder locked with key

D14 DOOR KEY LOCK AND UNLOCK SW AND DOOR UNLOCK DETECTION SW FRONT RH
1–4 : Closed with door lock cylinder unlocked with key
2–4 : Closed with door lock cylinder locked with key

E2 ENGINE HOOD COURTESY SW
2–1 : Open with engine hood open

U1 UNLOCK WARNING SW
2–1 : Closed with ignition key in cylinder

L4 LUGGAGE COMPARTMENT DOOR KEY UNLOCK SW
2–1 : Closed with luggage compartment door lock cylinder unlock

B8 (A), B9 (B) BODY ECU
(A)17–GROUND : Continuity with front RH door unlocked
(B) 1–GROUND : Always continuity
(A) 5–GROUND : Continuity with luggage compartment door unlocked
(A)13–GROUND : Continuity with engine hood closed
(A) 5–GROUND : Continuity with luggage compartment door open
(A)12–GROUND : Continuity with front RH door open
(B) 9–GROUND : Always approx. **12** volts
8–GROUND : Always approx. **12** volts
15–GROUND : Approx. **12** volts with the ignition SW at **ON** position
6–GROUND : Continuity with rear LH, RH door open
3–GROUND : Continuity with front LH door open

: PARTS LOCATION

Code		See Page	Code		See Page	Code		See Page
B8	A	36	E2		34	J22	A	37
B9	B	36	J1		37	J23	B	37
C7		36	J7		37	J24	A	37
D4		36	J11		37	J25	B	37
D6		38	J12	A	37	J26		37
D7		38	J13	B	37	J27		37
D8		38	J14	A	37	J33		38
D9		38	J15	B	37	L4		38
D10		38	J16		37	P9		39
D11		38	J17		37	R3	B	37
D12		38	J18	A	37	R4	C	37
D13		38	J19	B	37	T1		35
D14		38	J20		37	U1		37

: JUNCTION BLOCK AND WIRE HARNESS CONNECTOR

Code	See Page	Junction Block and Wire Harness (Connector Location)
1J	27	Engine Room Main Wire and Engine Room J/B (Engine Compartment Left)
2C	30	Instrument Panel Wire and Instrument Panel J/B (Cowl Side Panel LH)
2D		
2G	31	Engine Room Main Wire and Instrument Panel J/B (Cowl Side Panel LH)
2I	31	Cowl Wire and Instrument Panel J/B (Cowl Side Panel LH)
2J		
2K		
2L	31	Floor Wire and Instrument Panel J/B (Cowl Side Panel LH)

cardiagn.com

: CONNECTOR JOINING WIRE HARNESS AND WIRE HARNESS

Code	See Page	Joining Wire Harness and Wire Harness (Connector Location)
IA2	42	Engine Room Main Wire and Cowl Wire (Cowl Side Panel LH)
IB1	42	Floor Wire and Cowl Wire (Cowl Side Panel LH)
IC1	42	Front Door LH Wire and Cowl Wire (Left Kick Panel)
ID2	42	Instrument Panel Wire and Cowl Wire (Left Kick Panel)
IE1	42	Instrument Panel Wire and Engine Room Main Wire (Left Kick Panel)
IF1	42	Instrument Panel Wire and Floor Wire (Left Kick Panel)
IG1	42	Front Door LH Wire and Instrument Panel Wire (Left Kick Panel)
IN1	44	Front Door RH Wire and Instrument Panel Wire (Right Kick Panel)
IQ1	44	Front Door RH Wire and Cowl Wire (Right Kick Panel)
BA1	46	Rear Door No.2 Wire and Floor Wire (Center Pillar LH)
BB1	46	Rear Door No.1 Wire and Cowl Wire (Center Pillar RH)

: GROUND POINTS

Code	See Page	Ground Points Location
ID	42	Cowl Side Panel LH
IE		
IF	42	Left Kick Panel
IG	42	Cowl Side Panel RH
BI	46	Left Side of Rear Pillar
BJ	46	Right Side of Rear Pillar

cardiagn.com

RADIO AND PLAYER

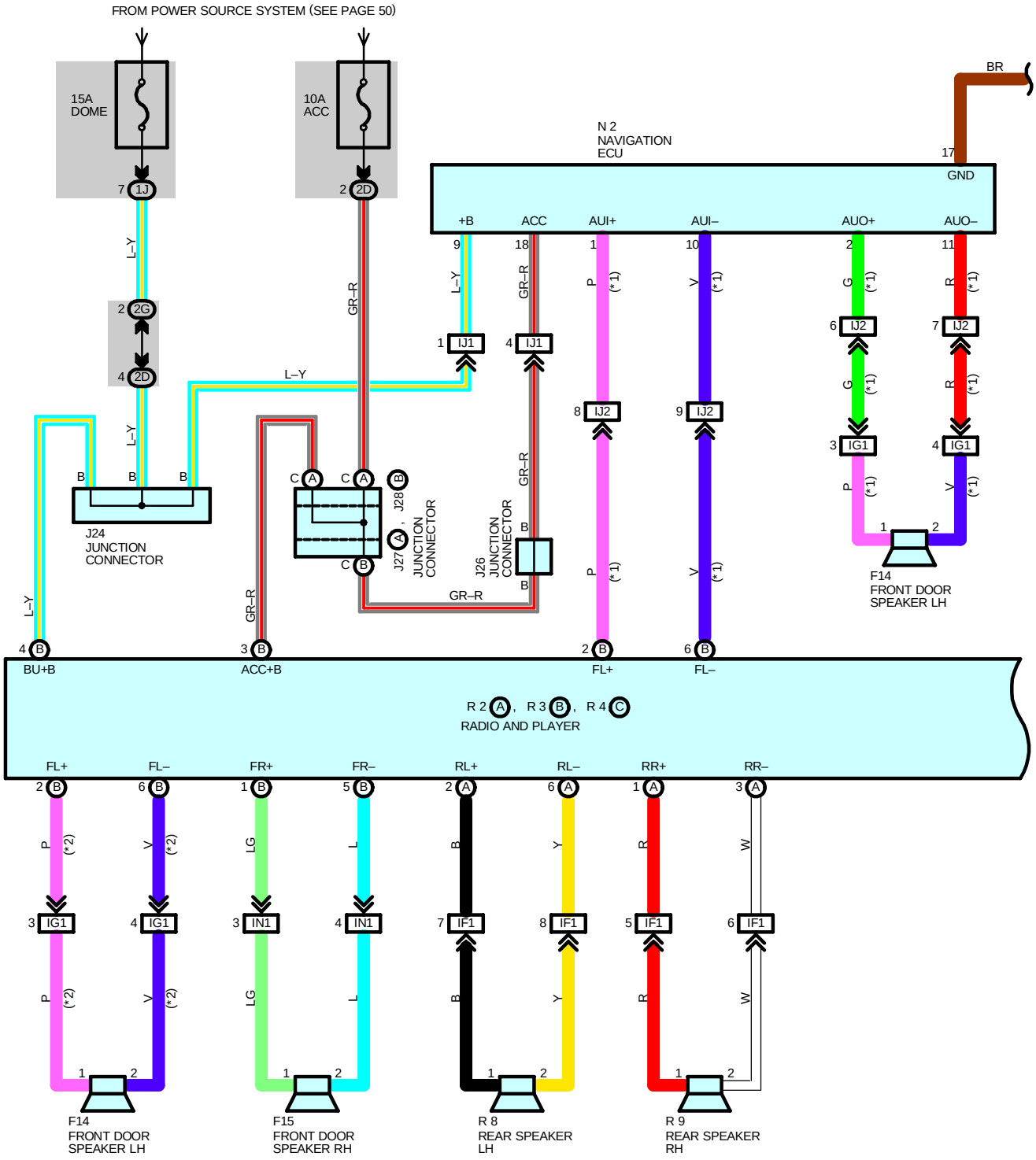

cardiagn.com

* 1 : W/ NAVIGATION SYSTEM
* 2 : W/O NAVIGATION SYSTEM

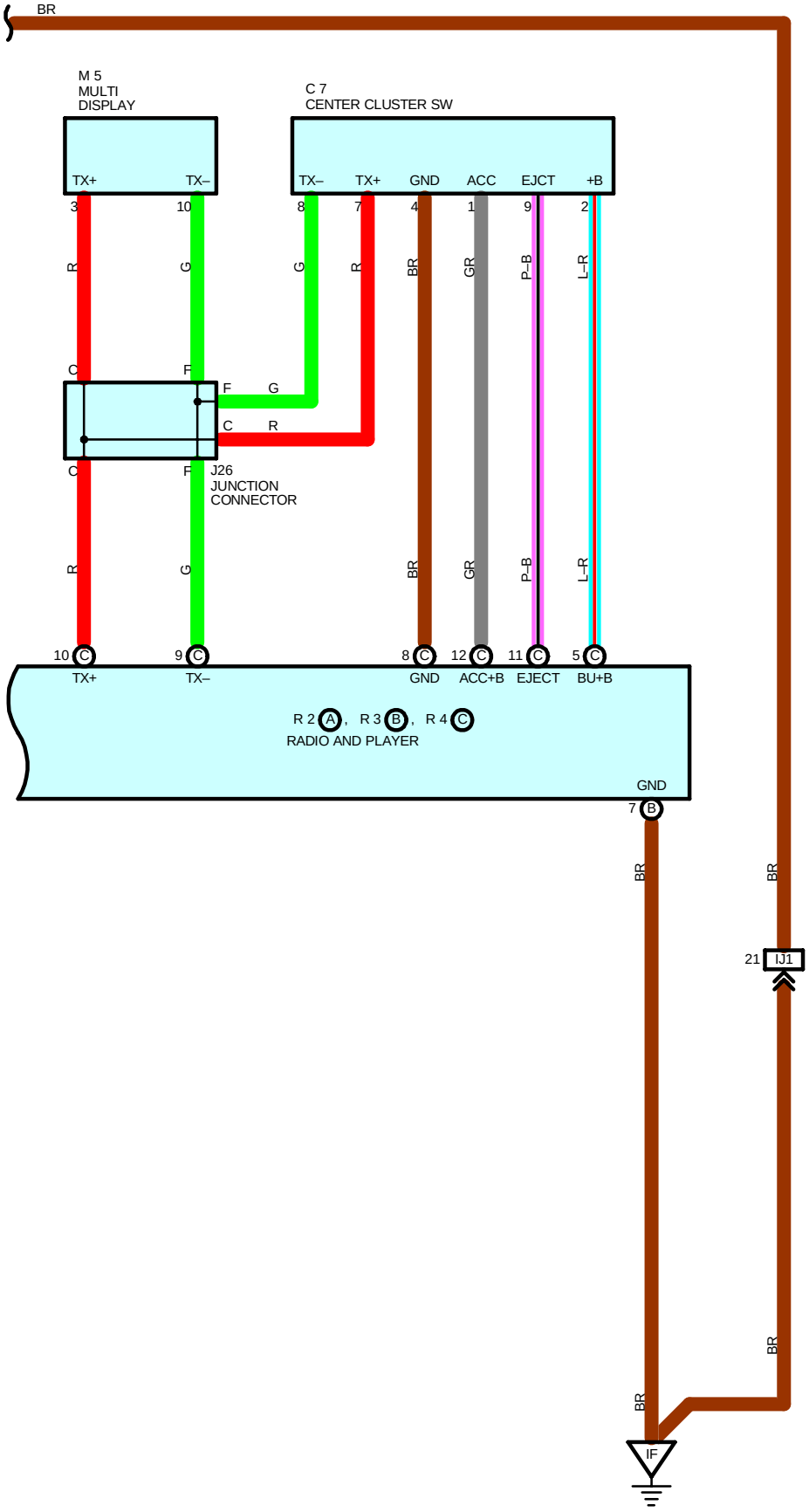

cardiagn.com

RADIO AND PLAYER

SERVICE HINTS

R3 (B) RADIO AND PLAYER

(B)4–GROUND : Always approx. **12** volts
(B)3–GROUND : Approx. **12** volts with the ignition SW at **ON** or **ACC** position
(B)7–GROUND : Always continuity

N2 NAVIGATION ECU

9–GROUND : Always approx. **12** volts
18–GROUND : Approx. **12** volts with the ignition SW at **ON** or **ACC** position
17–GROUND : Always continuity

: PARTS LOCATION

Code	See Page	Code		See Page	Code		See Page
C7	36	J27	A	37	R3	B	37
F14	38	J28	B	37	R4	C	37
F15	38	M5		37	R8		39
J24	37	N2		39	R9		39
J26	37	R2	A	37			

: JUNCTION BLOCK AND WIRE HARNESS CONNECTOR

Code	See Page	Junction Block and Wire Harness (Connector Location)
1J	27	Engine Room Main Wire and Engine Room J/B (Engine Compartment Left)
2D	30	Instrument Panel Wire and Instrument Panel J/B (Cowl Side Panel LH)
2G	31	Engine Room Main Wire and Instrument Panel J/B (Cowl Side Panel LH)

: CONNECTOR JOINING WIRE HARNESS AND WIRE HARNESS

Code	See Page	Joining Wire Harness and Wire Harness (Connector Location)
IF1	42	Instrument Panel Wire and Floor Wire (Left Kick Panel)
IG1	42	Front Door LH Wire and Instrument Panel Wire (Left Kick Panel)
IJ1	44	Floor No.3 Wire and Instrument Panel Wire (Under the Instrument Panel Center)
IJ2		
IN1	44	Front Door RH Wire and Instrument Panel Wire (Right Kick Panel)

: GROUND POINTS

Code	See Page	Ground Points Location
IF	42	Left Kick Panel

cardiagn.com

cardiagn.com

NAVIGATION SYSTEM

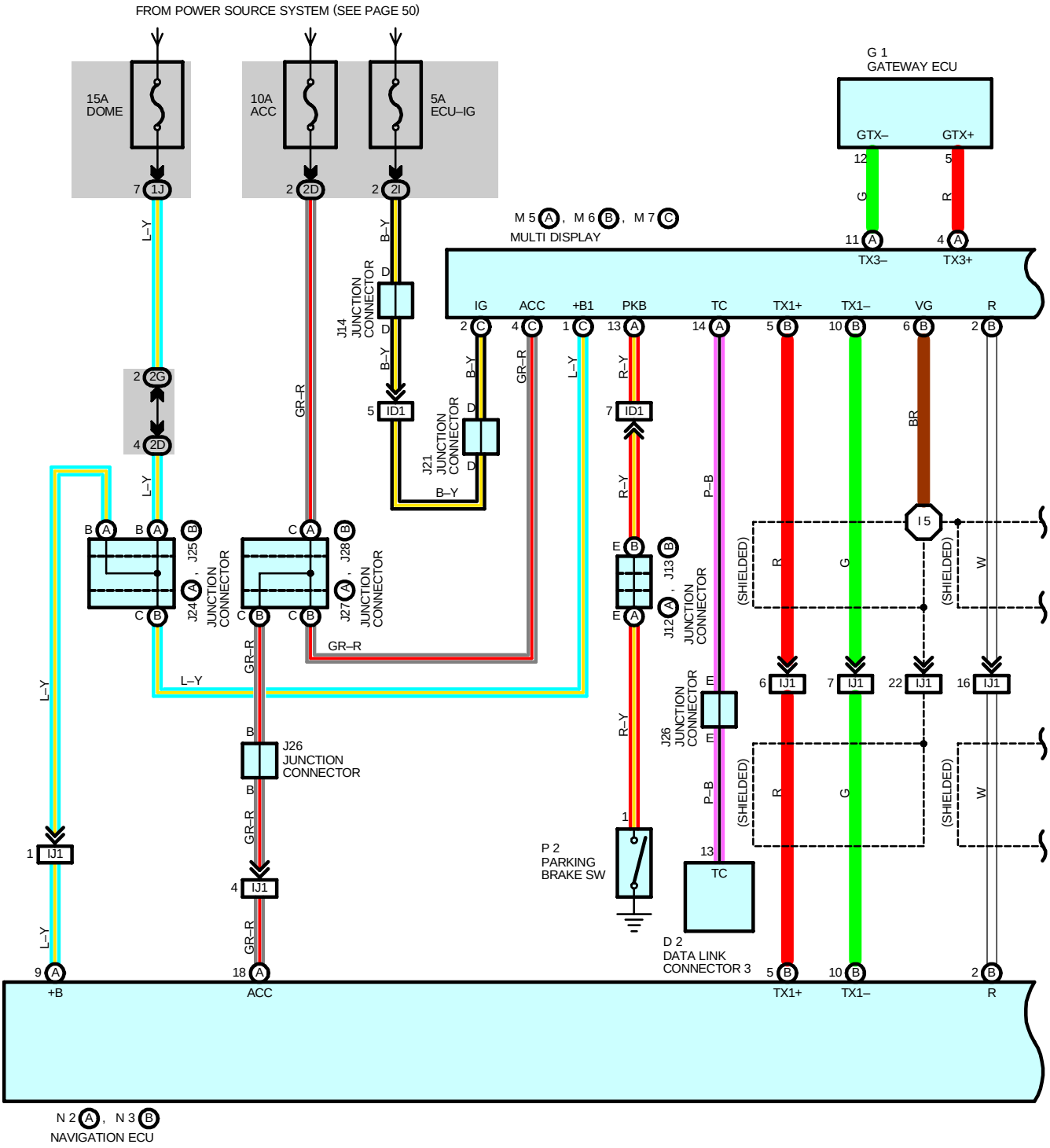

cardiagn.com

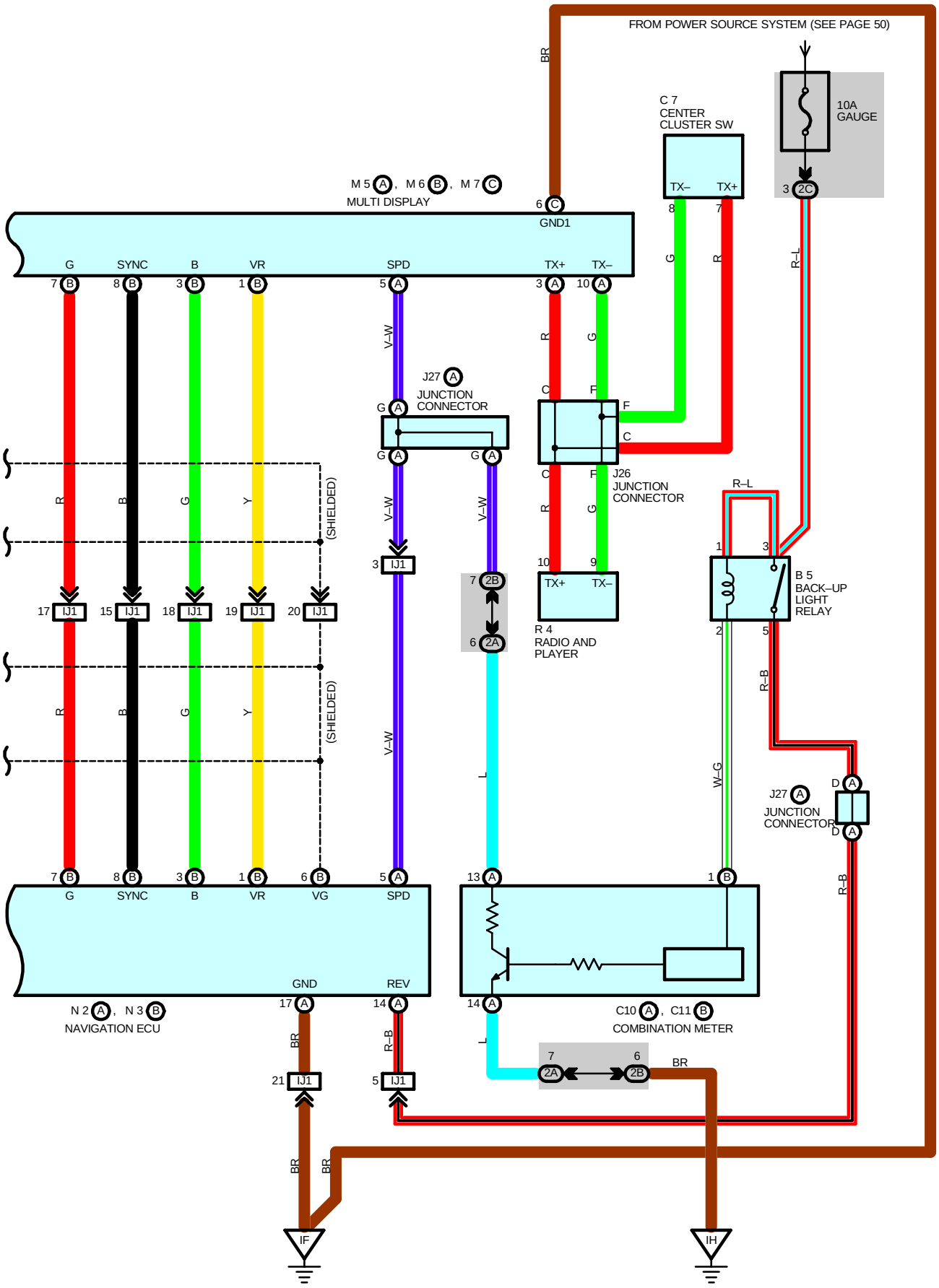

cardiagn.com

NAVIGATION SYSTEM

SERVICE HINTS

N2 (A) NAVIGATION ECU

(A) 9–GROUND : Always approx. **12** volts
(A)18–GROUND : Approx. **12** volts with the ignition SW at **ON** or **ACC** position
(A)17–GROUND : Always continuity

M7 (C) MULTI DISPLAY

(C)2–GROUND : Approx. **12** volts with the ignition SW at **ON** position
(C)4–GROUND : Approx. **12** volts with the ignition SW at **ON** or **ACC** position
(C)6–GROUND : Always continuity

○ : PARTS LOCATION

Code		See Page	Code		See Page	Code		See Page
B5		36	J14		37	M6	B	37
C7		36	J21		37	M7	C	37
C10	A	36	J24	A	37	N2	A	39
C11	B	36	J25	B	37	N3	B	39
D2		36	J26		37	P2		37
G1		37	J27	A	37	R4		37
J12	A	37	J28	B	37			
J13	B	37	M5	A	37			

: JUNCTION BLOCK AND WIRE HARNESS CONNECTOR

Code	See Page	Junction Block and Wire Harness (Connector Location)
1J	27	Engine Room Main Wire and Engine Room J/B (Engine Compartment Left)
2A	30	Instrument Panel Wire and Instrument Panel J/B (Cowl Side Panel LH)
2B		
2C		
2D		
2G	31	Engine Room Main Wire and Instrument Panel J/B (Cowl Side Panel LH)
2I	31	Cowl Wire and Instrument Panel J/B (Cowl Side Panel LH)

: CONNECTOR JOINING WIRE HARNESS AND WIRE HARNESS

Code	See Page	Joining Wire Harness and Wire Harness (Connector Location)
ID1	42	Instrument Panel Wire and Cowl Wire (Left Kick Panel)
IJ1	44	Floor No.3 Wire and Instrument Panel Wire (Under the Instrument Panel Center)

▽ : GROUND POINTS

Code	See Page	Ground Points Location
IF	42	Left Kick Panel
IH	42	Right Kick Panel

: SPLICE POINTS

Code	See Page	Wire Harness with Splice Points	Code	See Page	Wire Harness with Splice Points
I5	44	Instrument Panel Wire			

cardiagn.com

cardiagn.com

GATEWAY SYSTEM

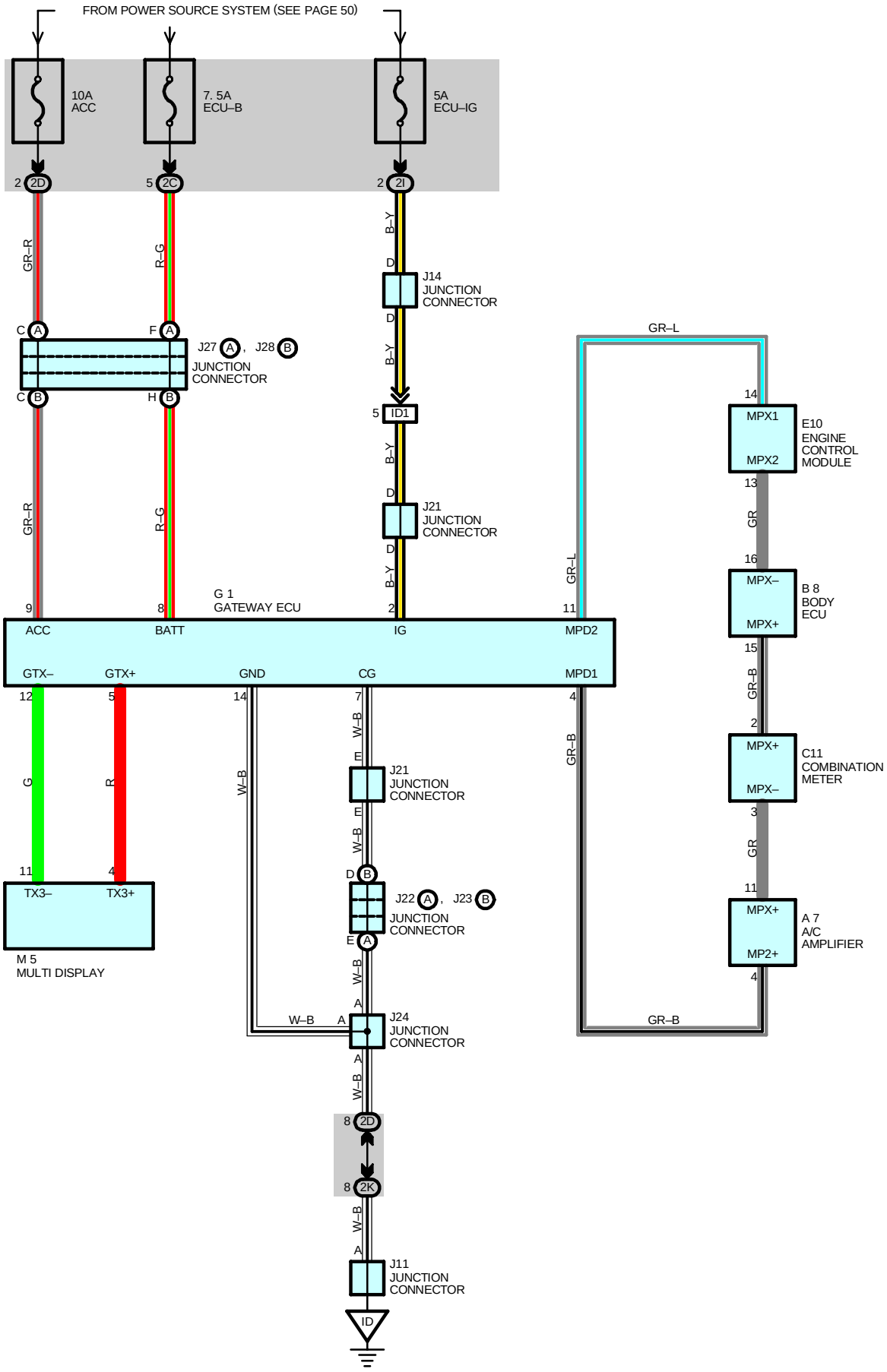

cardiagn.com

SERVICE HINTS

G1 GATEWAY ECU

8–GROUND : Always approx. **12** volts
2–GROUND : Approx. **12** volts with the ignition SW at **ON** position
9–GROUND : Approx. **12** volts with the ignition SW at **ACC** or **ON** position
7, 14–GROUND : Always continuity

: PARTS LOCATION

Code	See Page	Code	See Page	Code	See Page
A7	36	J11	37	J24	37
B8	36	J14	37	J27 A	37
C11	36	J21	37	J28 B	37
E10	36	J22 A	37	M5	37
G1	37	J23 B	37		

: JUNCTION BLOCK AND WIRE HARNESS CONNECTOR

Code	See Page	Junction Block and Wire Harness (Connector Location)
2C	30	Instrument Panel Wire and Instrument Panel J/B (Cowl Side Panel LH)
2D		
2I	31	Cowl Wire and Instrument Panel J/B (Cowl Side Panel LH)
2K		

: CONNECTOR JOINING WIRE HARNESS AND WIRE HARNESS

Code	See Page	Joining Wire Harness and Wire Harness (Connector Location)
ID1	42	Instrument Panel Wire and Cowl Wire (Left Kick Panel)

: GROUND POINTS

Code	See Page	Ground Points Location
ID	42	Cowl Side Panel LH

cardiagn.com

ELECTRIC TENSION REDUCER

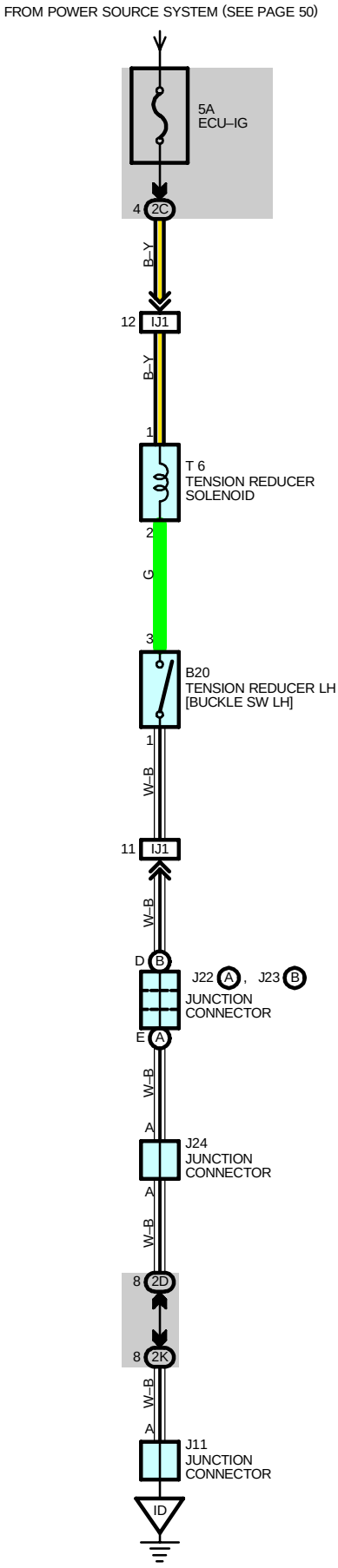

cardiagn.com

SERVICE HINTS

T6 TENSION REDUCER SOLENOID

1–GROUND : Approx. **12** volts with the ignition SW at **ON** position

B20 TENSION REDUCER LH [BUCKLE SW LH]

1–3 : Closed with driver's seat belt in use

: PARTS LOCATION

Code	See Page	Code		See Page	Code	See Page
B20	38	J22	A	37	J24	37
J11	37	J23	B	37	T6	39

: JUNCTION BLOCK AND WIRE HARNESS CONNECTOR

Code	See Page	Junction Block and Wire Harness (Connector Location)
2C	30	Instrument Panel Wire and Instrument Panel J/B (Cowl Side Panel LH)
2D		
2K	31	Cowl Wire and Instrument Panel J/B (Cowl Side Panel LH)

: CONNECTOR JOINING WIRE HARNESS AND WIRE HARNESS

Code	See Page	Joining Wire Harness and Wire Harness (Connector Location)
IJ1	44	Floor No.3 Wire and Instrument Panel Wire (Under the Instrument Panel Center)

: GROUND POINTS

Code	See Page	Ground Points Location
ID	42	Cowl Side Panel LH

cardiagn.com

EMPS

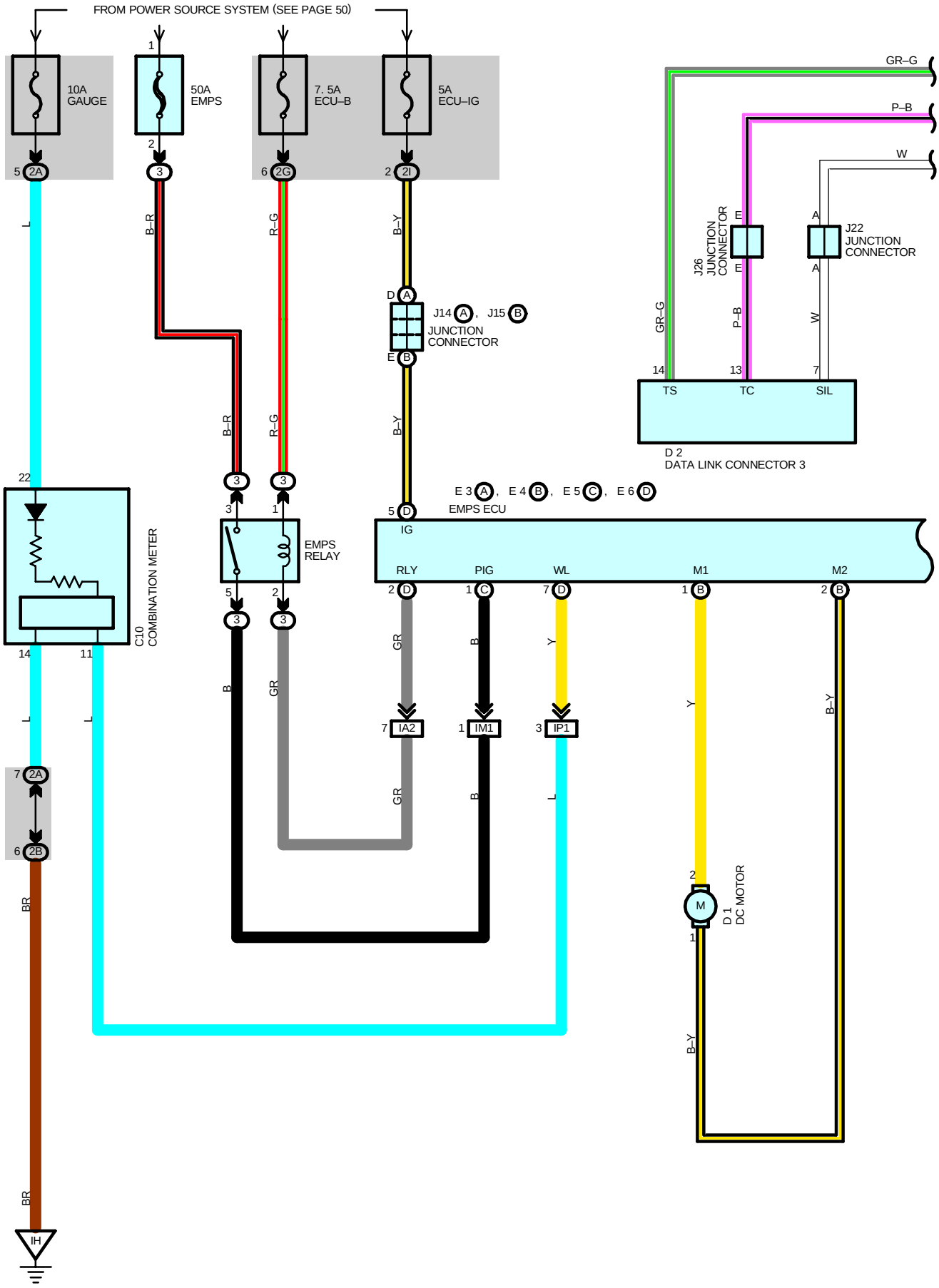

cardiagn.com

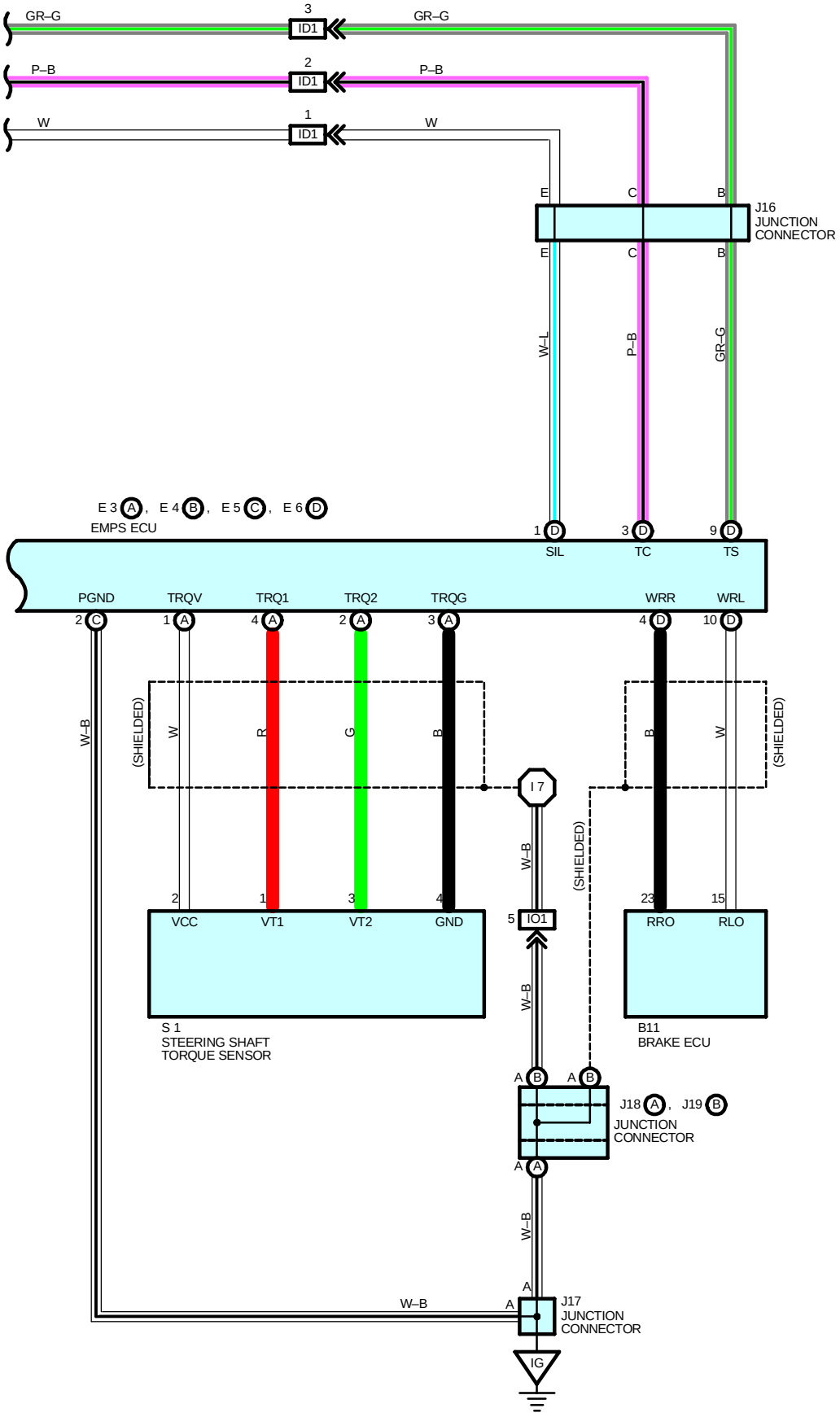

cardiagn.com

EMPS

SYSTEM OUTLINE

In this system, the controller determines the direction and the amount of the assistant force based on the signals from the vehicle speed sensor and the torque sensor that is built in the gear box. The controller then assists the operation of the steering wheel by controlling the DC motor installed in the steering gear box.

SERVICE HINTS

E5 (C), E6 (D) EMPS ECU

(D) 5–GROUND : Approx. **12** volts with the ignition SW at **ON** position
(C) 2–GROUND : Always continuity

: PARTS LOCATION

Code		See Page	Code		See Page	Code		See Page
B11		36	E5	C	36	J18	A	37
C10		36	E6	D	36	J19	B	37
D1		34	J14	A	37	J22		37
D2		36	J15	B	37	J26		37
E3	A	36	J16		37	S1		35
E4	B	36	J17		37			

: RELAY BLOCKS

Code	See Page	Relay Blocks (Relay Block Location)
3	24	Engine Room R/B No.3 (Engine Compartment Right)

: JUNCTION BLOCK AND WIRE HARNESS CONNECTOR

Code	See Page	Junction Block and Wire Harness (Connector Location)
2A	30	Instrument Panel Wire and Instrument Panel J/B (Cowl Side Panel LH)
2B		
2G	31	Engine Room Main Wire and Instrument Panel J/B (Cowl Side Panel LH)
2I	31	Cowl Wire and Instrument Panel J/B (Cowl Side Panel LH)

: CONNECTOR JOINING WIRE HARNESS AND WIRE HARNESS

Code	See Page	Joining Wire Harness and Wire Harness (Connector Location)
IA2	42	Engine Room Main Wire and Cowl Wire (Cowl Side Panel LH)
ID1	42	Instrument Panel Wire and Cowl Wire (Left Kick Panel)
IM1	44	Engine Room Main Wire and Cowl Wire (Right Kick Panel)
IO1	44	Engine Wire and Cowl Wire (Right Kick Panel)
IP1	44	Instrument Panel Wire and Cowl Wire (Right Kick Panel)

: GROUND POINTS

Code	See Page	Ground Points Location
IG	42	Cowl Side Panel RH
IH	42	Right Kick Panel

: SPLICE POINTS

Code	See Page	Wire Harness with Splice Points	Code	See Page	Wire Harness with Splice Points
I7	44	Engine Wire			

cardiagn.com

NOTICE: When inspecting or repairing the SRS, perform the operation in accordance with the following precautionary instructions and the procedure and precautions in the Repair Manual for the applicable model year.

- Malfunction symptoms of the SRS are difficult to confirm, so the DTCs become the most important source of information when troubleshooting. When troubleshooting the SRS, always inspect the DTCs before disconnecting the battery.
- **Work must be started after 90 seconds from when the ignition switch is turned to the ”LOCK” position and the negative (–) terminal cable is disconnected from the battery.**
  (The SRS is equipped with a back–up power source so that if work is started within 90 seconds from disconnecting the negative (–) terminal cable of the battery, the SRS may be deployed.)
- When the negative (–) terminal cable is disconnected from the battery, the memory of the clock and audio system will be canceled. So before starting work, make a record of the contents memorized in the audio memory system. When work is finished, reset the audio systems as they were before and adjust the clock. To avoid erasing the memory in each memory system, never use a back–up power supply from outside the vehicle.
- Before repairs, remove the airbag sensor if shocks are likely to be applied to the sensor during repairs.
- Do not expose the steering wheel pad, front passenger airbag assembly, side airbag assembly, seat belt pretensioner, airbag sensor assembly or side airbag sensor directly to hot air or flames.
- Even in cases of a minor collision where the SRS does not deploy, the steering wheel pad, front passenger airbag assembly, side airbag assembly, seat belt pretensioner, airbag sensor assembly and side airbag sensor assembly should be inspected.
- Never use SRS parts from another vehicle. When replacing parts, replace them with new parts.
- Never disassemble and repair the steering wheel pad, front passenger airbag assembly, side airbag assembly, seat belt pretensioner, airbag sensor assembly or side airbag sensor assembly in order to reuse it.
- If the steering wheel pad, front passenger airbag assembly, side airbag assembly, seat belt pretensioner, airbag sensor assembly or side airbag sensor assembly has been dropped, or if there are cracks, dents or other defects in the case, bracket or connector, replace them with new ones.
- Use a volt/ohmmeter with high impedance (10 kΩ/V minimum) for troubleshooting the system’s electrical circuits.
- Information labels are attached to the periphery of the SRS components. Follow the instructions on the notices.
- After work on the SRS is completed, perform the SRS warning light check.
- If the vehicle is equipped with a mobile communication system, refer to the precaution in the IN section of the Repair Manual.

cardiagn.com

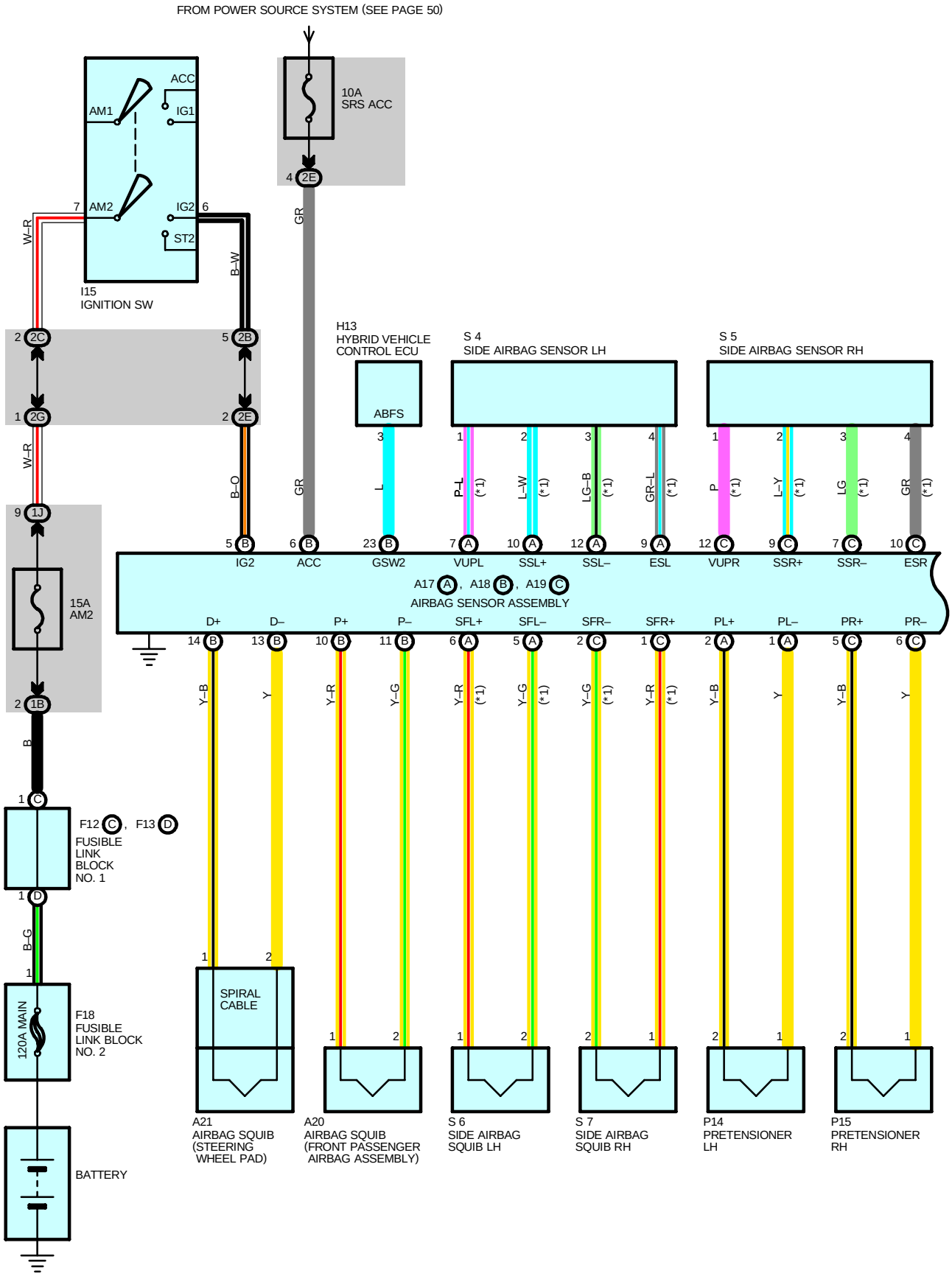

cardiagn.com

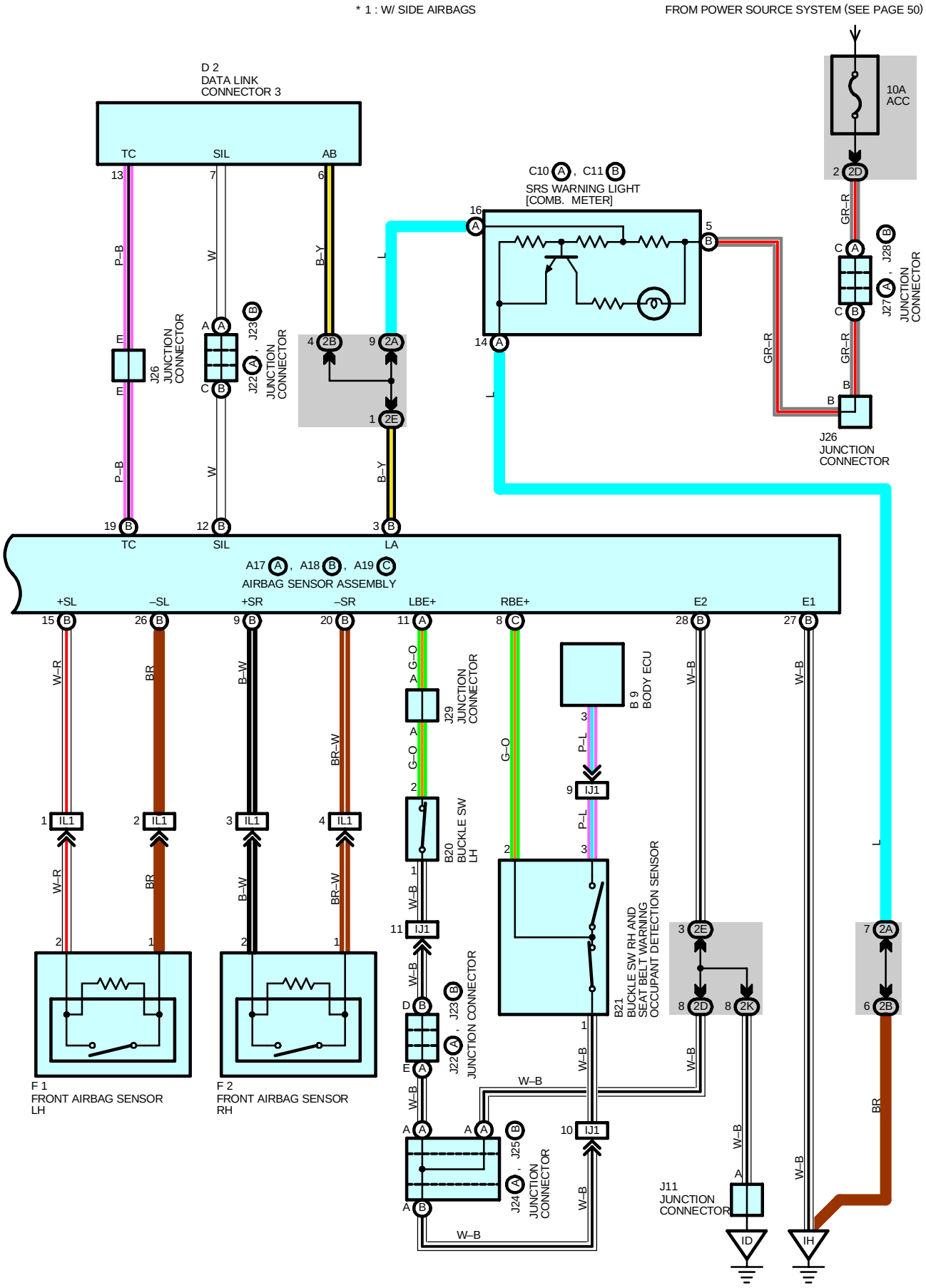

cardiagn.com

SYSTEM OUTLINE

The SRS is a driver and front passenger protection device which has a supplemental role to the seat belts.
When the ignition SW is turned to ACC or ON, current from the SRS ACC fuse flows to TERMINAL (B) 6 of the airbag sensor assembly. Only when the ignition SW is on does the current flow TERMINAL (B) 5 of the airbag sensor assembly.
If an accident occurs while driving, when the frontal impact exceeds a set level, current flows to TERMINALS (B) 14, (B) 10, (A) 2 and (C) 5 of the airbag sensor assembly to TERMINAL 1 of the airbag squibs and the pretensioners to TERMINAL 2 to TERMINALS (B) 13, (B) 11, (A) 1 and (C) 6 of the airbag sensor assembly to TERMINAL (B) 27, (B) 28 or BODY GROUND to GROUND, so that current flows to the front airbag squibs and the pretensioners and causes them to operate.
When the side impact also exceeds a set level, current from the ignition SW (IG2) or SRS ACC fuse flows to TERMINALS (A) 5, (C) 2, (A) 2 and (C) 5 of the airbag sensor assembly to TERMINAL 1 of the side airbag squibs and the pretensioners to TERMINAL 2 to TERMINALS (A) 6, (C) 1, (A) 1 and (C) 6 of the airbag sensor assembly to TERMINAL (B) 27, (B) 28 or BODY GROUND to GROUND, causing side airbag squibs and the pretensioners to operate.
The airbag stored inside the steering wheel pad is instantaneously expanded to soften the shock to the driver.
The airbag stored inside the passenger's instrument panel is instantaneously expanded to soften the shock to the front passenger.
Side airbags are instantaneously expanded to soften the shock of side to the driver and front passenger (w/ side airbags).
The pretensioners make sure of the seat belt restrainability.

: PARTS LOCATION

Code		See Page	Code		See Page	Code		See Page
A17	A	36	F1		34	J25	B	37
A18	B	36	F2		34	J26		37
A19	C	36	F12	C	34	J27	A	37
A20		36	F13	D	34	J28	B	37
A21		36	F18		38	J29		37
B9		36	H13		37	P14		39
B20		38	I15		37	P15		39
B21		38	J11		37	S4		39
C10	A	36	J22	A	37	S5		39
C11	B	36	J23	B	37	S6		39
D2		36	J24	A	37	S7		39

: JUNCTION BLOCK AND WIRE HARNESS CONNECTOR

Code	See Page	Junction Block and Wire Harness (Connector Location)
1B	27	Engine Room Main Wire and Engine Room J/B (Engine Compartment Left)
1J		
2A	30	Instrument Panel Wire and Instrument Panel J/B (Cowl Side Panel LH)
2B		
2C		
2D		
2E		
2G	31	Engine Room Main Wire and Instrument Panel J/B (Cowl Side Panel LH)
2K	31	Cowl Wire and Instrument Panel J/B (Cowl Side Panel LH)

: CONNECTOR JOINING WIRE HARNESS AND WIRE HARNESS

Code	See Page	Joining Wire Harness and Wire Harness (Connector Location)
IJ1	44	Floor No.3 Wire and Instrument Panel Wire (Under the Instrument Panel Center)
IL1	44	Instrument Panel Wire and Engine Room Main Wire (Right Kick Panel)

: GROUND POINTS

Code	See Page	Ground Points Location
ID	42	Cowl Side Panel LH
IH	42	Right Kick Panel

cardiagn.com

cardiagn.com

ABS

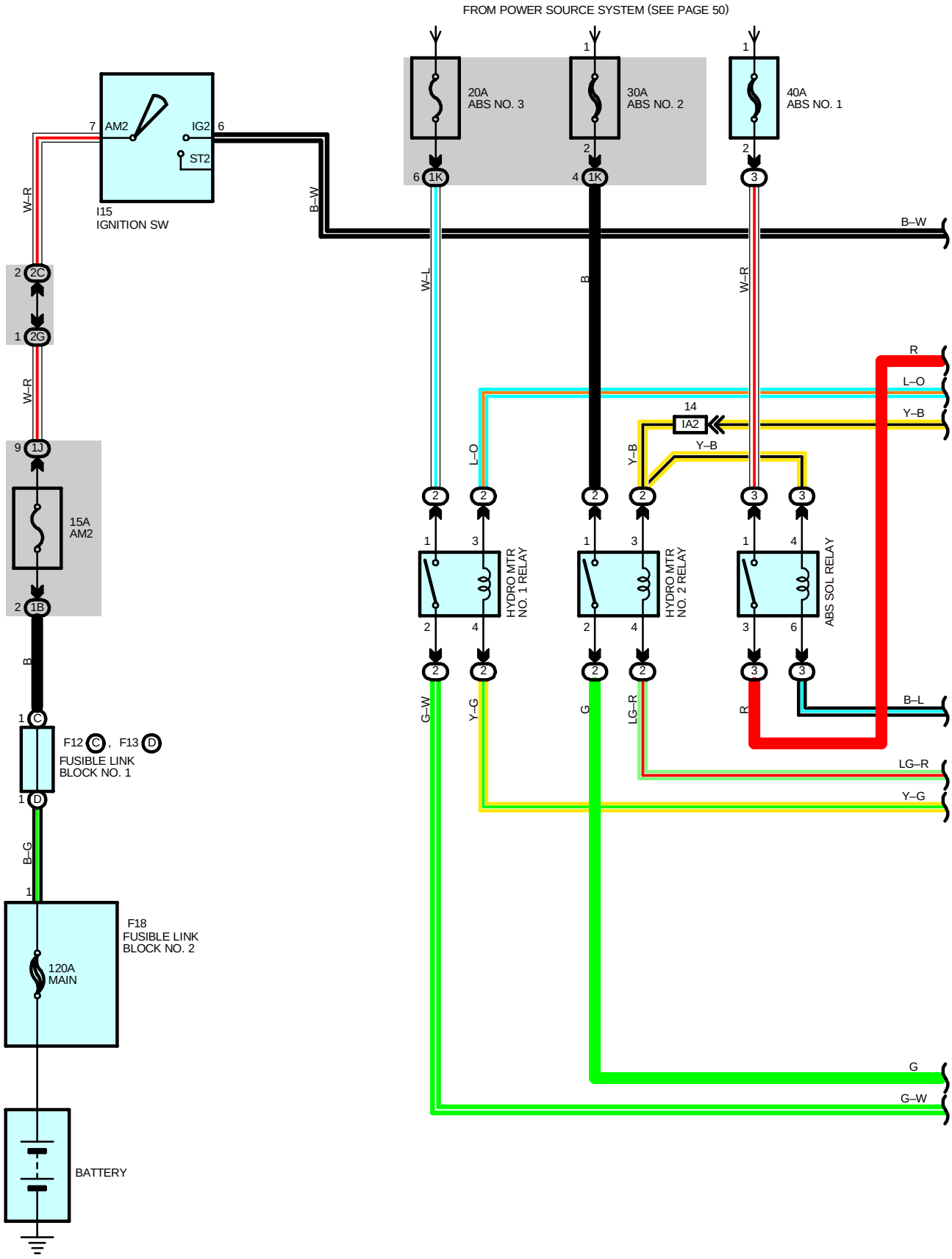

cardiagn.com

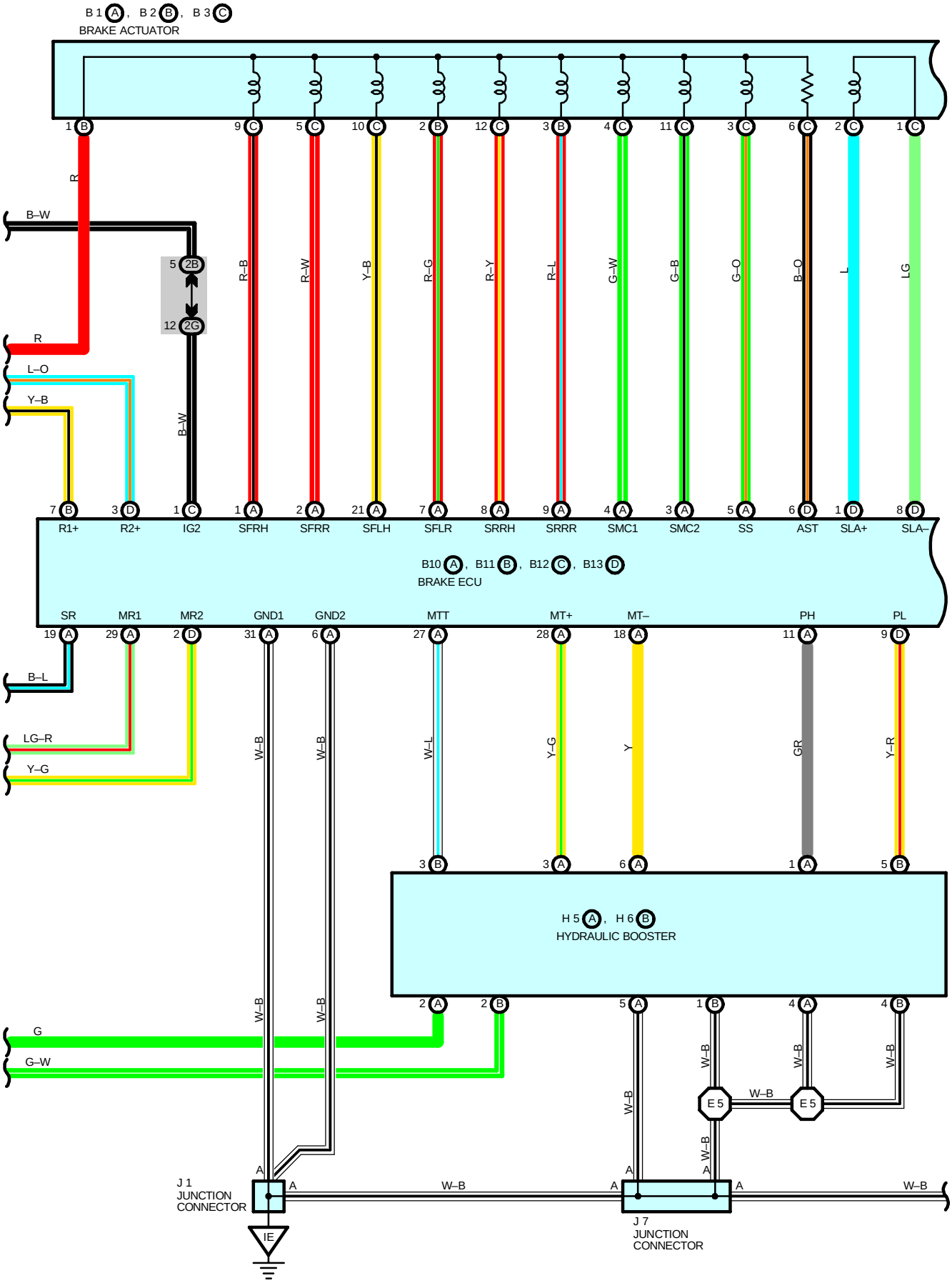

cardiagn.com

ABS

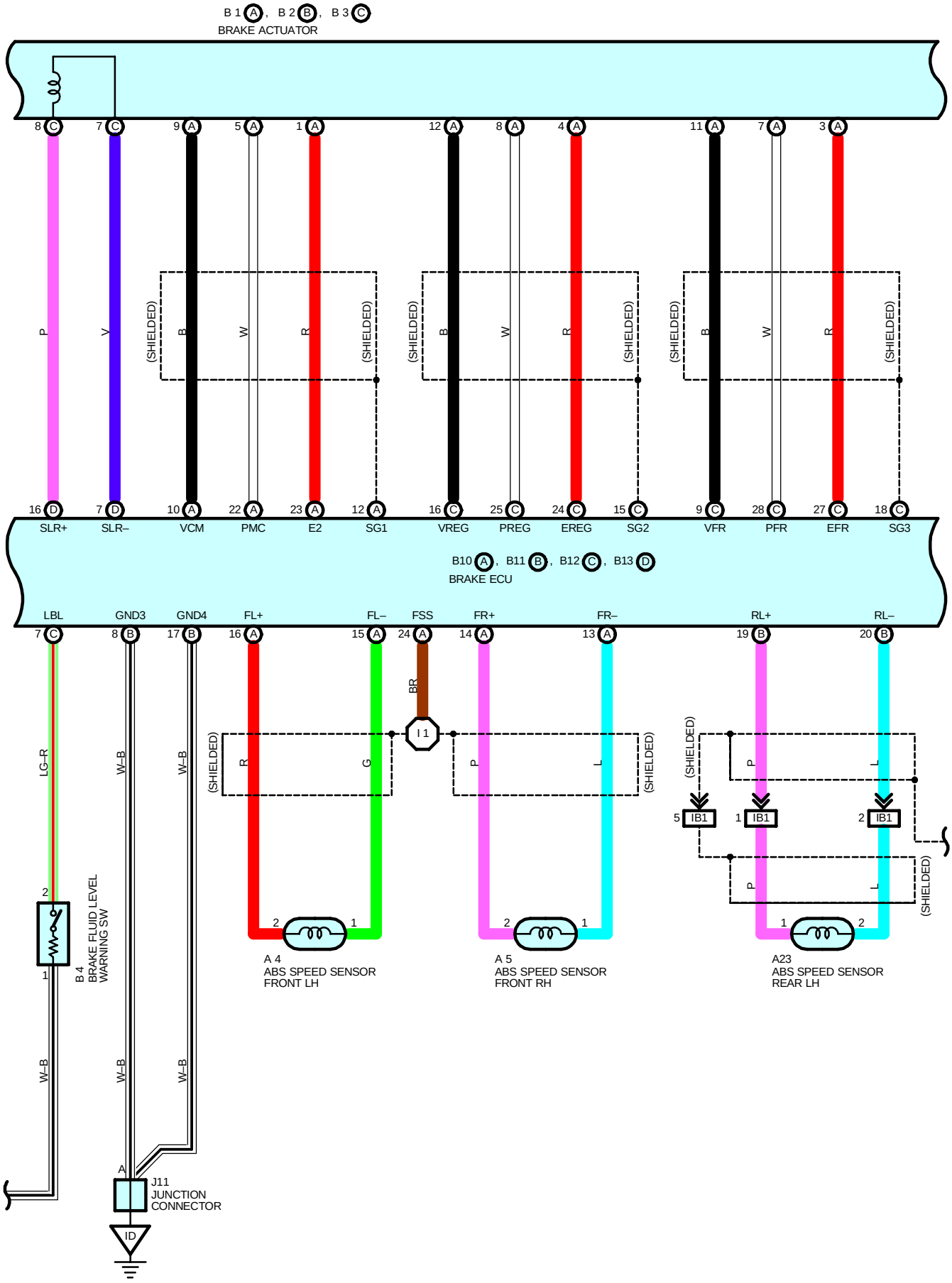

cardiagn.com

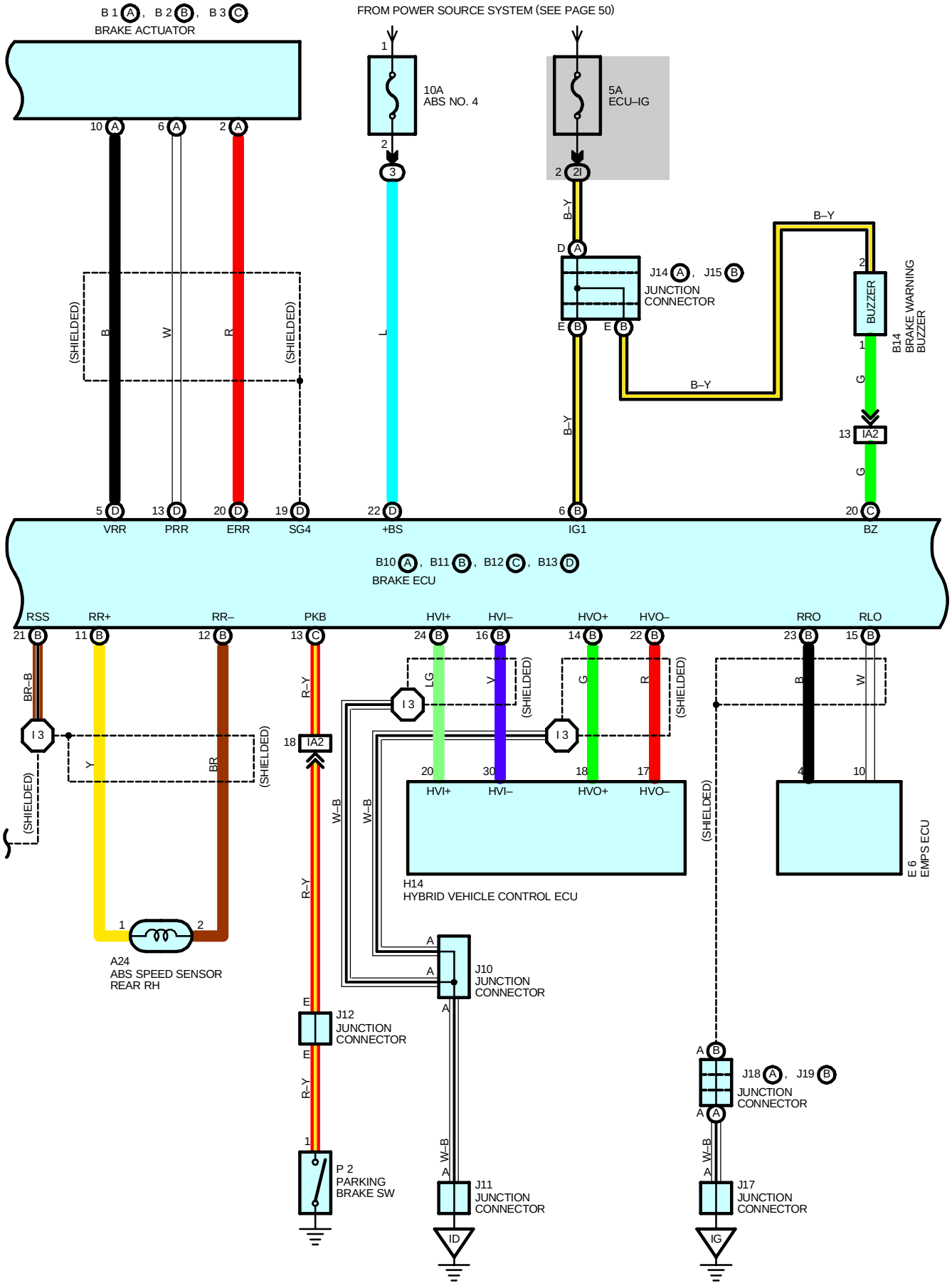

cardiagn.com

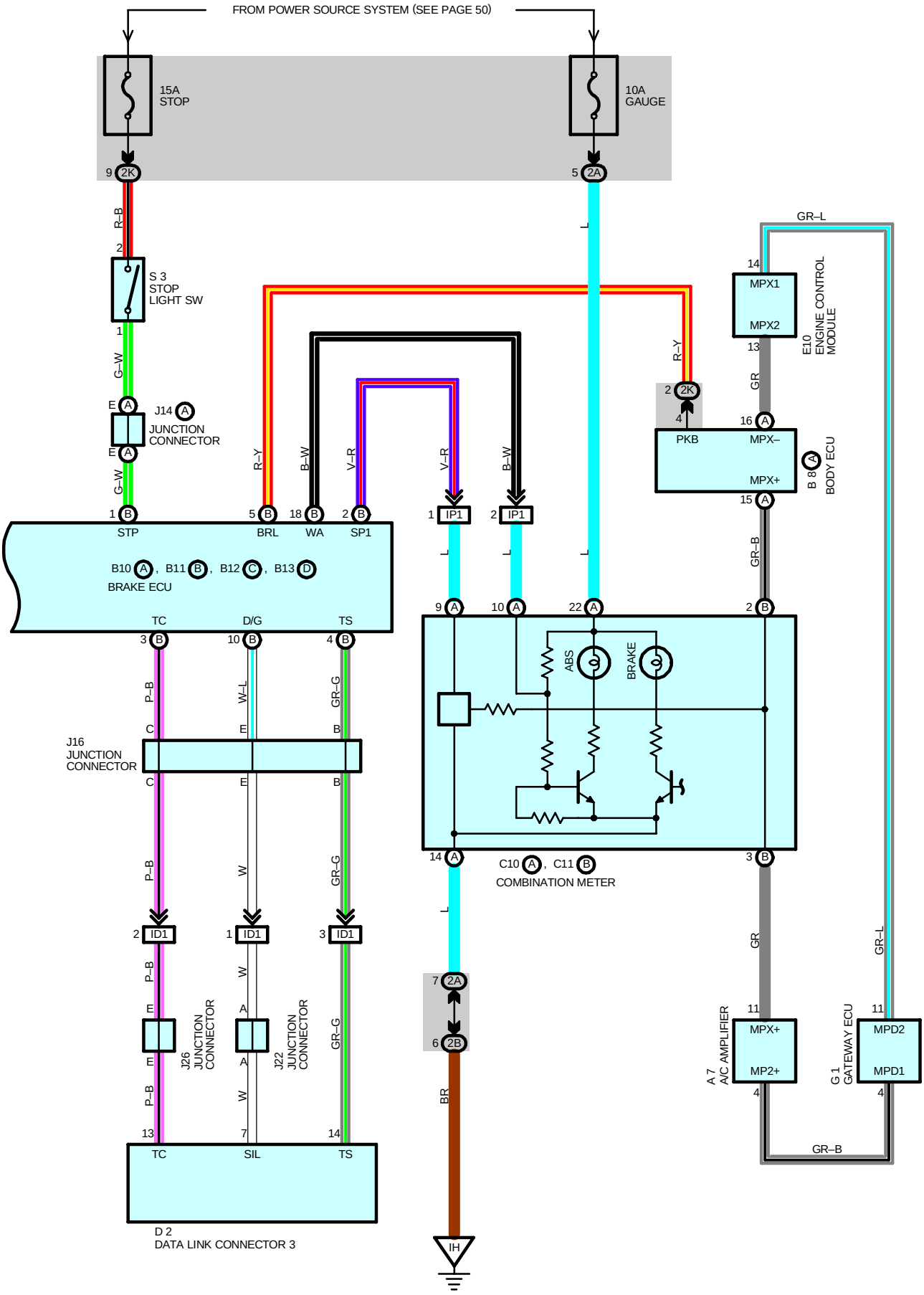

cardiagn.com

SYSTEM OUTLINE

1. INPUT SIGNALS

(1) Speed sensor signal

The speed of the wheels is detected and input to TERMINALS FL+, FR+, RL+ and RR+ of the brake ECU.

(2) Stop light SW signal

A signal is input to TERMINAL STP of the brake ECU when the brake pedal is depressed.

2. ABS SYSTEM OPERATION

During sudden braking the brake ECU has signals input from each sensor, which controls the current to the solenoid inside the actuator and lets the hydraulic pressure acting on each wheel cylinder escape to the reservoir. The pump inside the actuator is also operating at this time and it returns the brake fluid from the reservoir to the master cylinder, thus preventing locking of the vehicle wheels.

If the brake ECU judges that the hydraulic pressure acting on the wheel cylinder is insufficient, the current on the solenoid is controlled and the hydraulic pressure is increased. Holding of the hydraulic pressure is also controlled by the brake ECU, by the same method as above. Pressure reduction, holding and increase are repeated to maintain vehicle stability and to improve steerability during sudden braking.

SERVICE HINTS

A4, A5 ABS SPEED SENSOR FRONT LH, RH

2–1 : **1.4–1.8** kΩ (**20**°C, **68**°F)

A23, A24 ABS SPEED SENSOR REAR LH, RH

2–1 : **1.04–1.3** kΩ (**20**°C, **68**°F)

B10 (A), B11 (B), B12 (C), B13 (D) BRAKE ECU

(B) 6, (C) 1–GROUND : Approx. **12** volts with the ignition SW at **ON** position

(D) 22–GROUND : Always approx. **12** volts

(A) 6, (A)31–GROUND : Always continuity

: PARTS LOCATION

Code		See Page	Code		See Page	Code		See Page
A4		34	C10	A	36	J10		37
A5		34	C11	B	36	J11		37
A7		36	D2		36	J12		37
A23		38	E6		36	J14	A	37
A24		38	E10		36	J15	B	37
B1	A	34	F12	C	34	J16		37
B2	B	34	F13	D	34	J17		37
B3	C	34	F18		38	J18	A	37
B4		34	G1		37	J19	B	37
B8	A	36	H5	A	34	J22		37
B10	A	36	H6	B	34	J26		37
B11	B	36	H14		37	P2		37
B12	C	36	I15		37	S3		37
B13	D	36	J1		37			
B14		36	J7		37			

: RELAY BLOCKS

Code	See Page	Relay Blocks (Relay Block Location)
2	23	Engine Room R/B No.2 (Right Side of Reserve Tank)
3	24	Engine Room R/B No.3 (Engine Compartment Right)

cardiagn.com

: JUNCTION BLOCK AND WIRE HARNESS CONNECTOR

Code	See Page	Junction Block and Wire Harness (Connector Location)
1B	27	Engine Room Main Wire and Engine Room J/B (Engine Compartment Left)
1J		
1K		
2A	30	Instrument Panel Wire and Instrument Panel J/B (Cowl Side Panel LH)
2B		
2C		
2G	31	Engine Room Main Wire and Instrument Panel J/B (Cowl Side Panel LH)
2I	31	Cowl Wire and Instrument Panel J/B (Cowl Side Panel LH)
2K		

: CONNECTOR JOINING WIRE HARNESS AND WIRE HARNESS

Code	See Page	Joining Wire Harness and Wire Harness (Connector Location)
IA2	42	Engine Room Main Wire and Cowl Wire (Cowl Side Panel LH)
IB1	42	Floor Wire and Cowl Wire (Cowl Side Panel LH)
ID1	42	Instrument Panel Wire and Cowl Wire (Left Kick Panel)
IP1	44	Instrument Panel Wire and Cowl Wire (Right Kick Panel)

: GROUND POINTS

Code	See Page	Ground Points Location
ID	42	Cowl Side Panel LH
IE		
IG	42	Cowl Side Panel RH
IH	42	Right Kick Panel

: SPLICE POINTS

Code	See Page	Wire Harness with Splice Points	Code	See Page	Wire Harness with Splice Points
E5	40	Engine Room Main Wire	I3	44	Cowl Wire
I1	44				

cardiagn.com

cardiagn.com

REAR WINDOW DEFOGGER

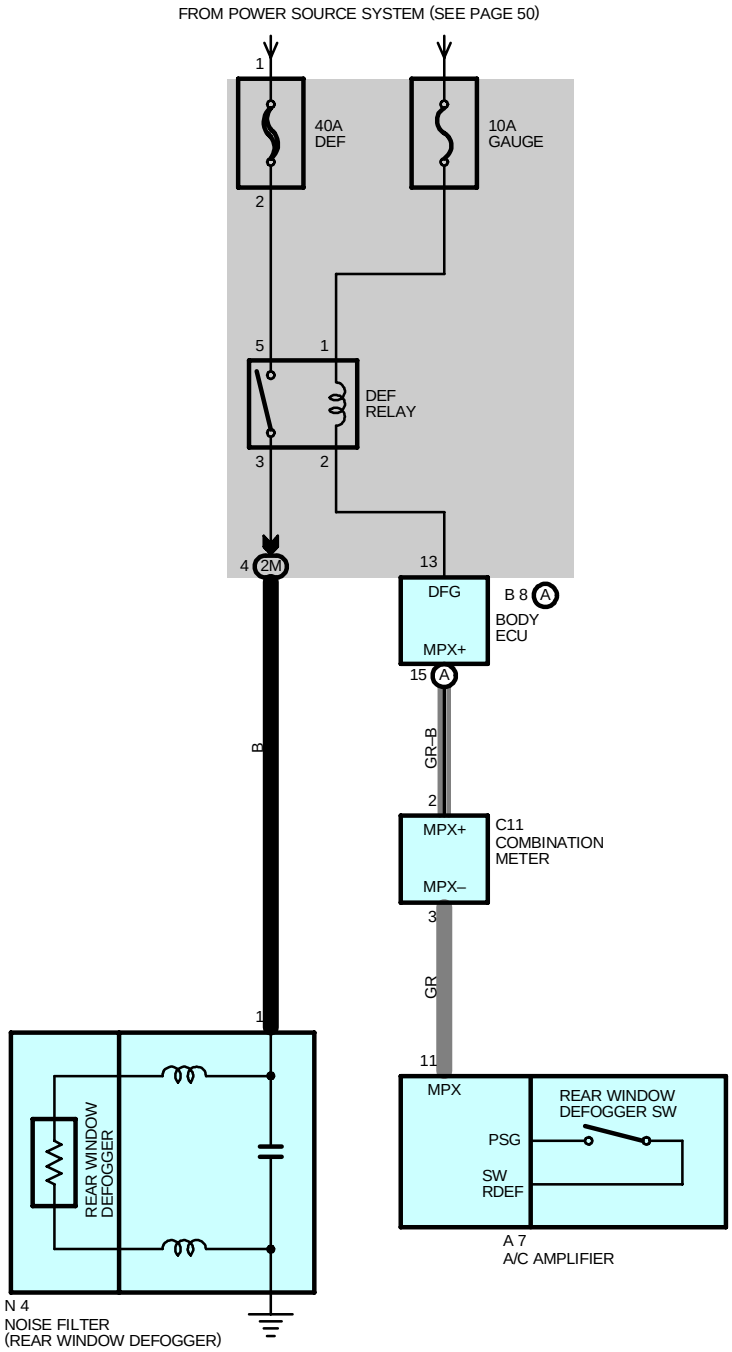

cardiagn.com

SERVICE HINTS

DEF RELAY

5–3 : Closed with the ignition SW on and the rear window defogger SW on

: PARTS LOCATION

Code		See Page	Code	See Page	Code	See Page
A7		36	C11	36		
B8	A	36	N4	39		

: JUNCTION BLOCK AND WIRE HARNESS CONNECTOR

Code	See Page	Junction Block and Wire Harness (Connector Location)
2M	31	Floor Wire and Instrument Panel J/B (Cowl Side Panel LH)

cardiagn.com

COMBINATION METER

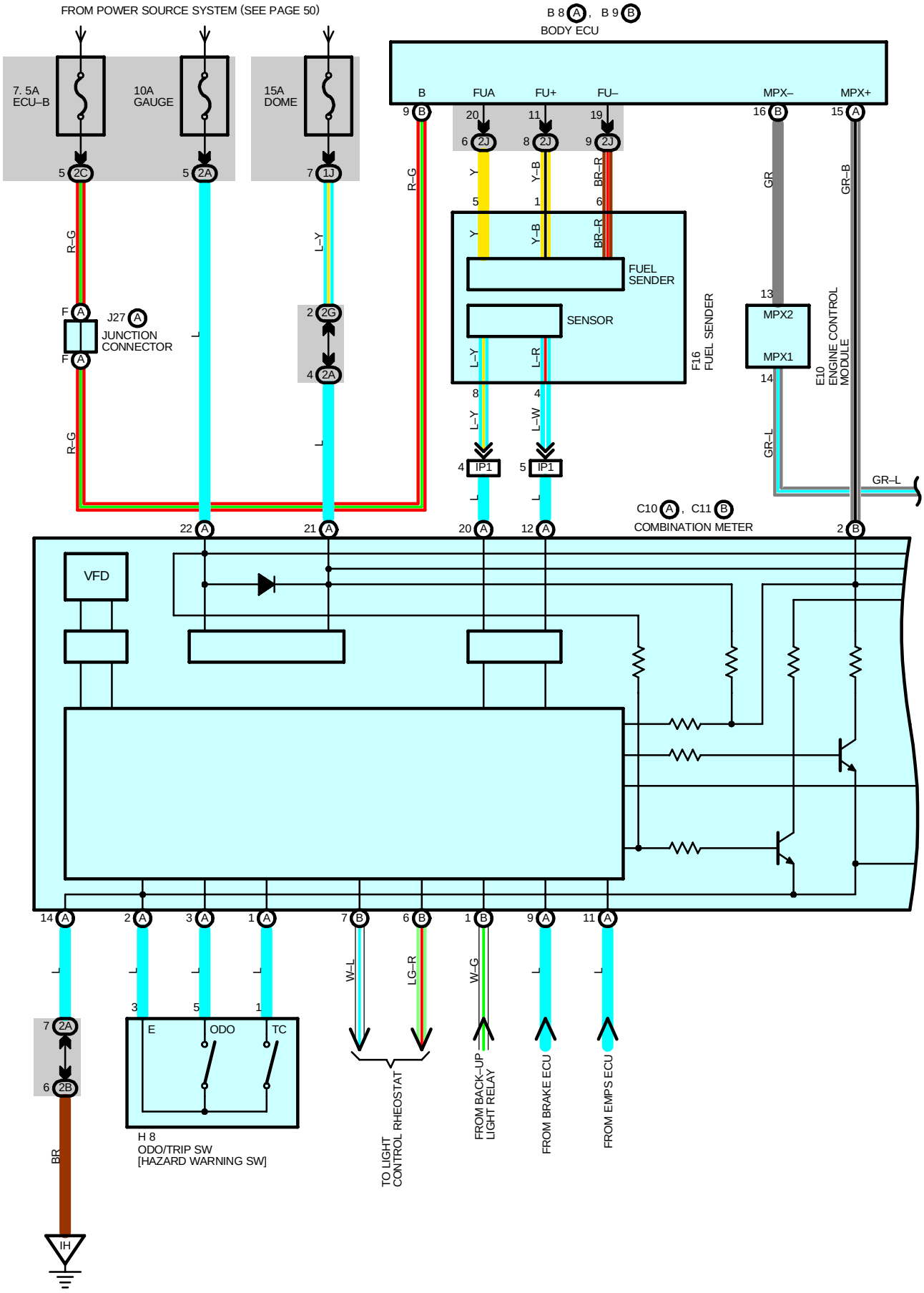

cardiagn.com

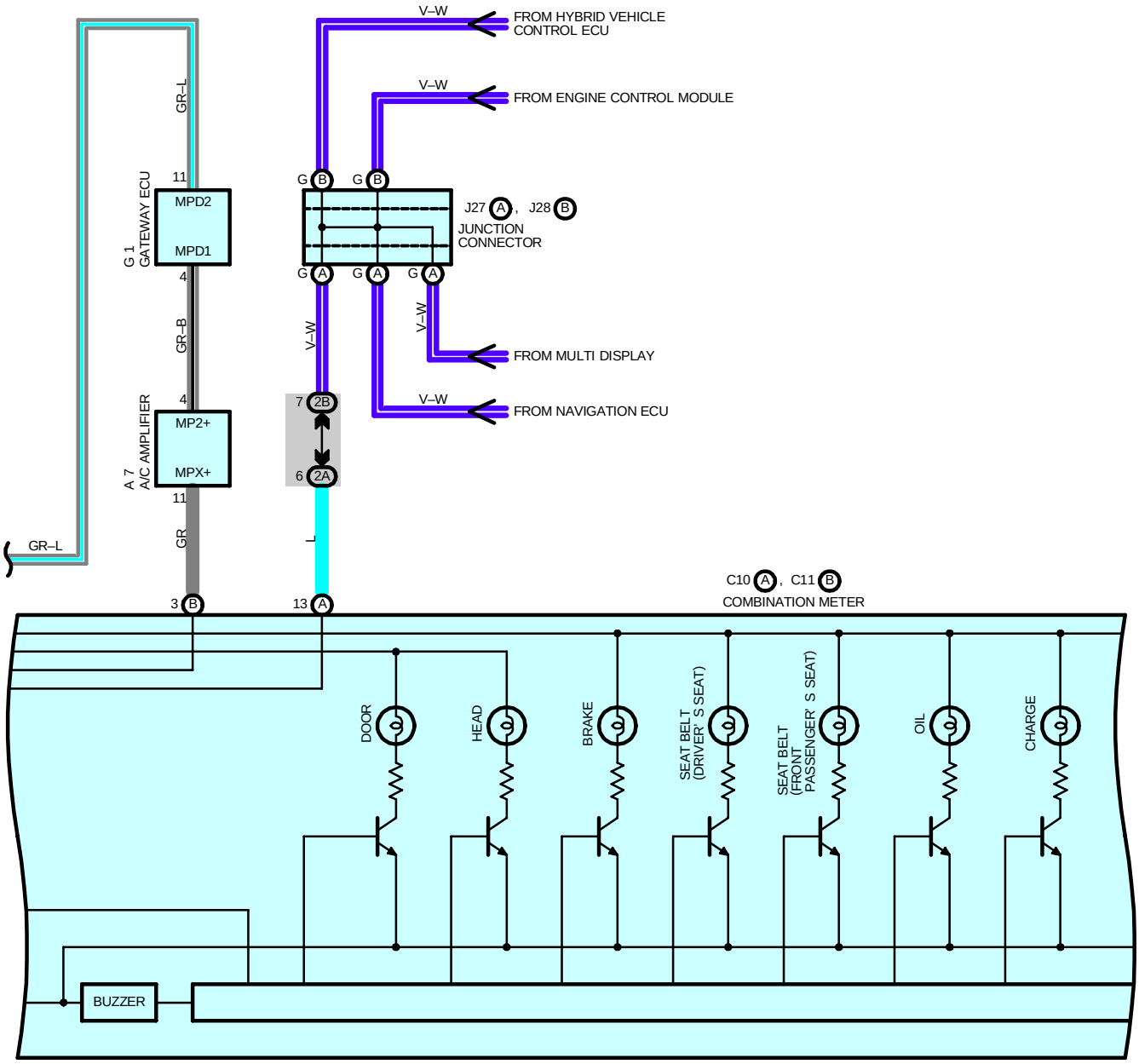

cardiagn.com

COMBINATION METER

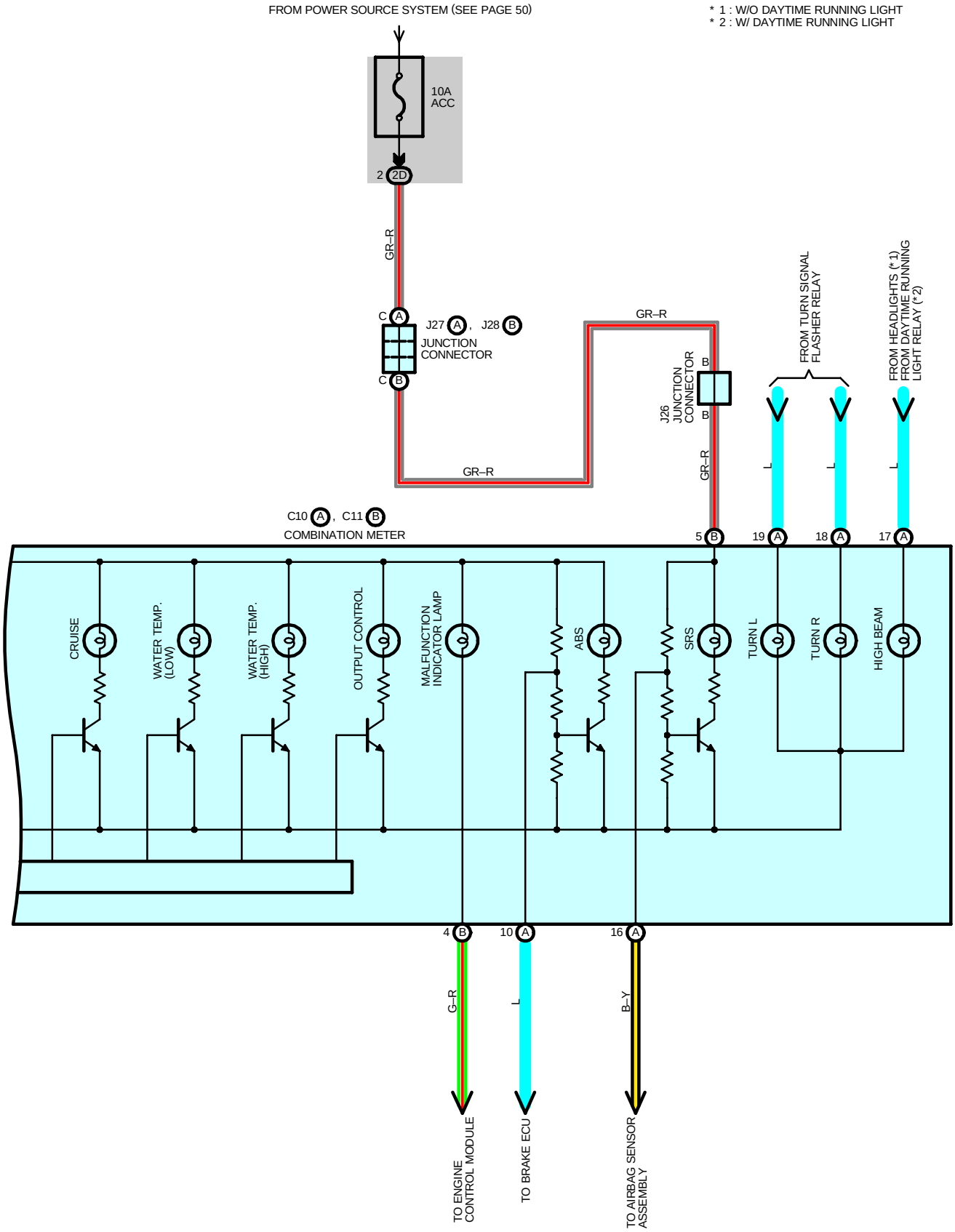

cardiagn.com

SERVICE HINTS

C10 (A), C11 (B) COMBINATION METER

(A)22–GROUND : Approx. **12** volts with the ignition SW at **ON** position
(B) 5–GROUND : Approx. **12** volts with the ignition SW at **ON** or **ACC** position
(A)21–GROUND : Always approx. **12** volts
(A)14–GROUND : Always continuity

: PARTS LOCATION

Code		See Page	Code		See Page	Code		See Page
A7		36	C11	B	36	H8		37
B8	A	36	E10		36	J26		37
B9	B	36	F16		38	J27	A	37
C10	A	36	G1		37	J28	B	37

: JUNCTION BLOCK AND WIRE HARNESS CONNECTOR

Code	See Page	Junction Block and Wire Harness (Connector Location)
1J	27	Engine Room Main Wire and Engine Room J/B (Engine Compartment Left)
2A	30	Instrument Panel Wire and Instrument Panel J/B (Cowl Side Panel LH)
2B		
2C		
2D		
2G	31	Engine Room Main Wire and Instrument Panel J/B (Cowl Side Panel LH)
2J	31	Cowl Wire and Instrument Panel J/B (Cowl Side Panel LH)

: CONNECTOR JOINING WIRE HARNESS AND WIRE HARNESS

Code	See Page	Joining Wire Harness and Wire Harness (Connector Location)
IP1	44	Instrument Panel Wire and Cowl Wire (Right Kick Panel)

: GROUND POINTS

Code	See Page	Ground Points Location
IH	42	Right Kick Panel

cardiagn.com

RADIATOR FAN AND CONDENSER FAN

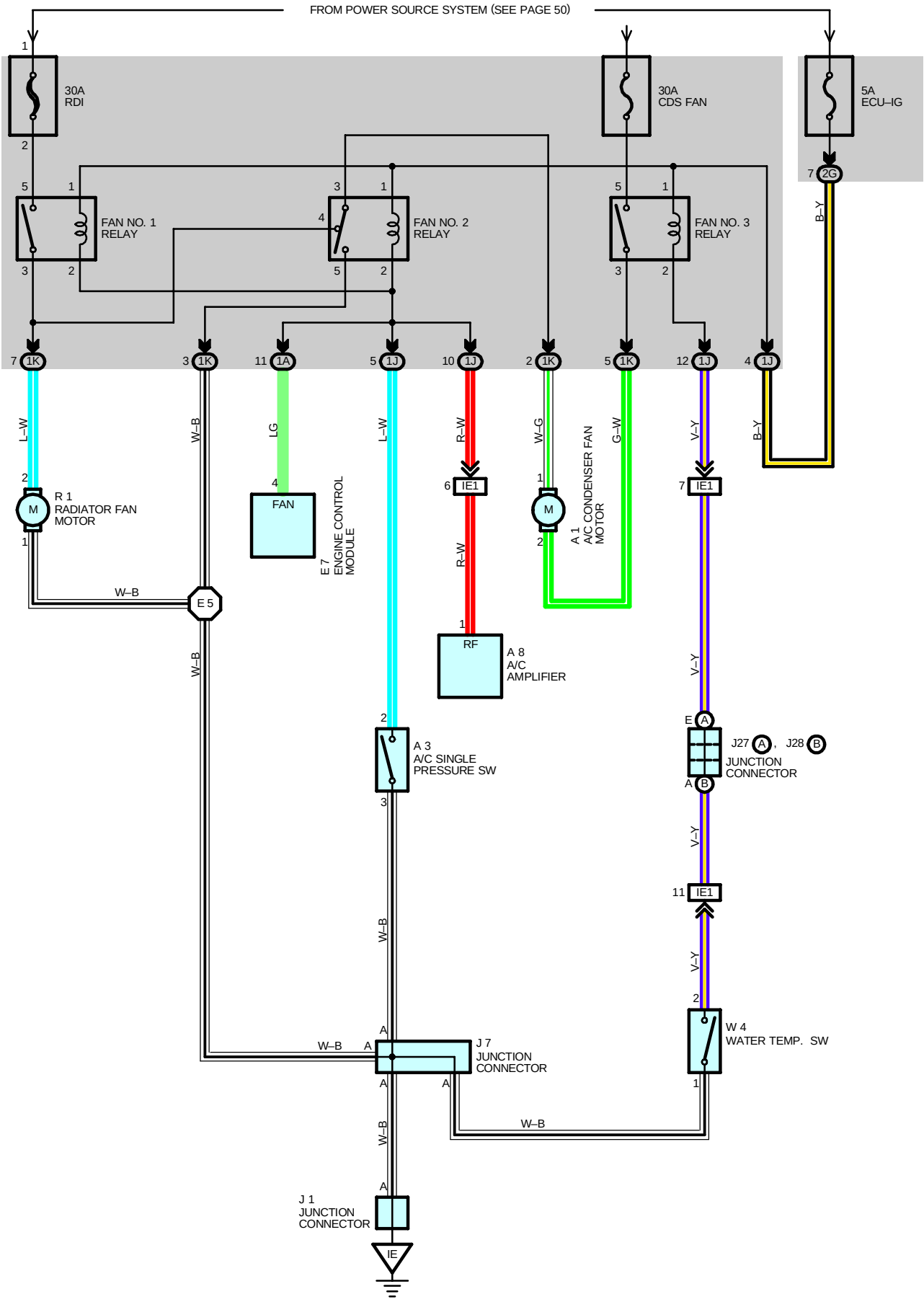

cardiagn.com

SYSTEM OUTLINE

The radiator fan motor and A/C condenser fan motor operates according to the water temp. SW (Inverter), A/C single pressure SW, and the A/C system condition. The FAN NO.1 relay, FAN NO.2 relay, FAN NO.3 relay are turned on/off, to operate the fan motors at low speed (In series), or high speed (In parallel).

1. LOW SPEED OPERATION

When the water temp. SW (Inverter) is on, the radiator fan motor and A/C condenser fan motor operates at low speed.

2. HIGH SPEED OPERATION

When the water temp. SW (Inverter) is on, if the A/C system is operating A/C single pressure SW is on, the radiator fan motor and A/C condenser fan motor operates at high speed.

SERVICE HINTS

A3 A/C SINGLE PRESSURE SW

3–2 : Close above approx. **1520** kpa (**15.5** kgf/cm^2, **220** psi)
Open below approx. **1230** kpa (**12.5** kgf/cm^2, **178** psi)

: PARTS LOCATION

Code	See Page	Code	See Page	Code	See Page
A1	34	J1	37	R1	35
A3	34	J7	37	W4	35
A8	36	J27 A	37		
E7	36	J28 B	37		

: JUNCTION BLOCK AND WIRE HARNESS CONNECTOR

Code	See Page	Junction Block and Wire Harness (Connector Location)
1A	27	Engine Wire and Engine Room J/B (Engine Compartment Left)
1J	27	Engine Room Main Wire and Engine Room J/B (Engine Compartment Left)
1K		
2G	31	Engine Room Main Wire and Instrument Panel J/B (Cowl Side Panel LH)

: CONNECTOR JOINING WIRE HARNESS AND WIRE HARNESS

Code	See Page	Joining Wire Harness and Wire Harness (Connector Location)
IE1	42	Instrument Panel Wire and Engine Room Main Wire (Left Kick Panel)

: GROUND POINTS

Code	See Page	Ground Points Location
IE	42	Cowl Side Panel LH

: SPLICE POINTS

Code	See Page	Wire Harness with Splice Points	Code	See Page	Wire Harness with Splice Points
E5	40	Engine Room Main Wire			

cardiagn.com

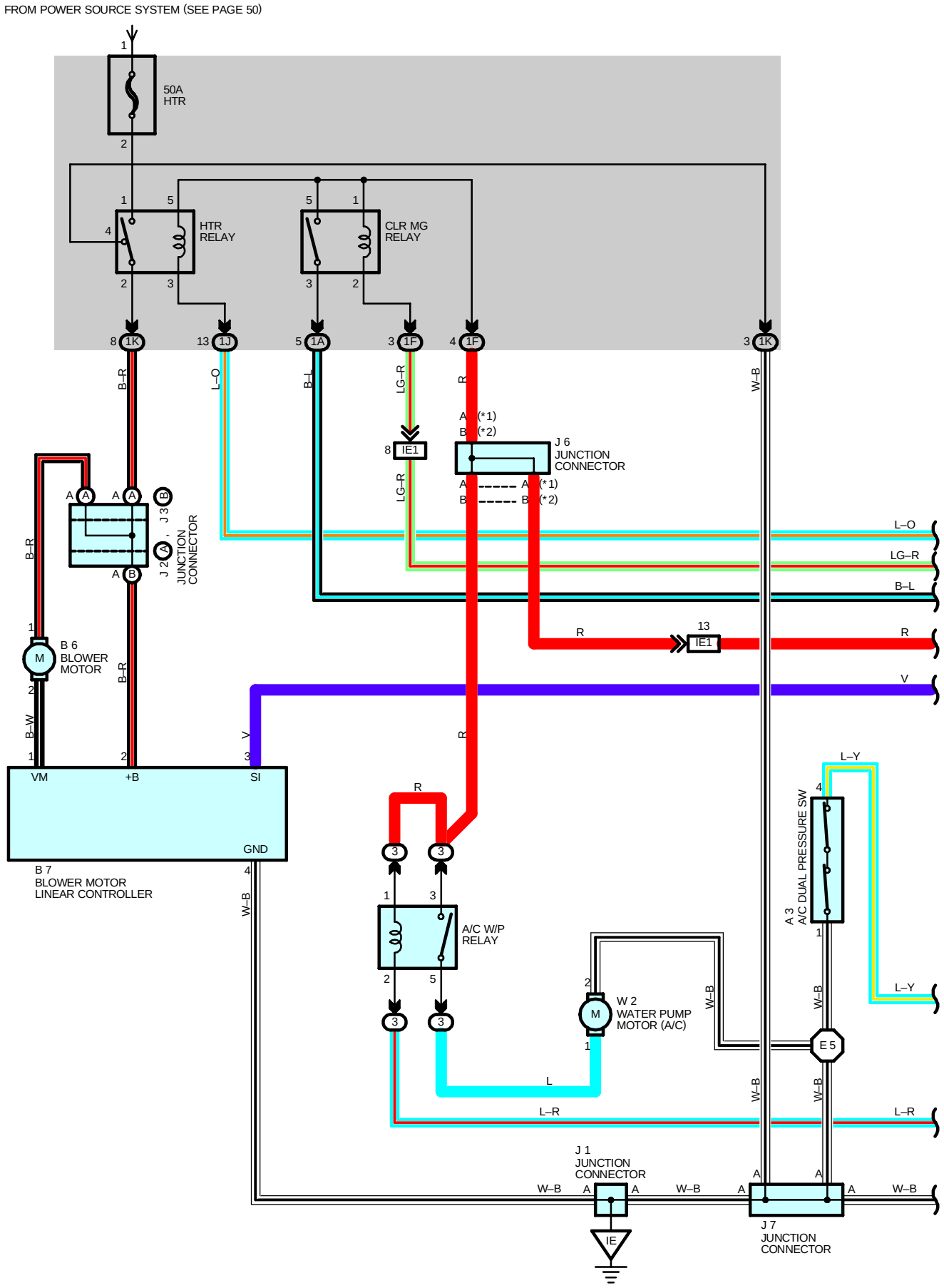

cardiagn.com

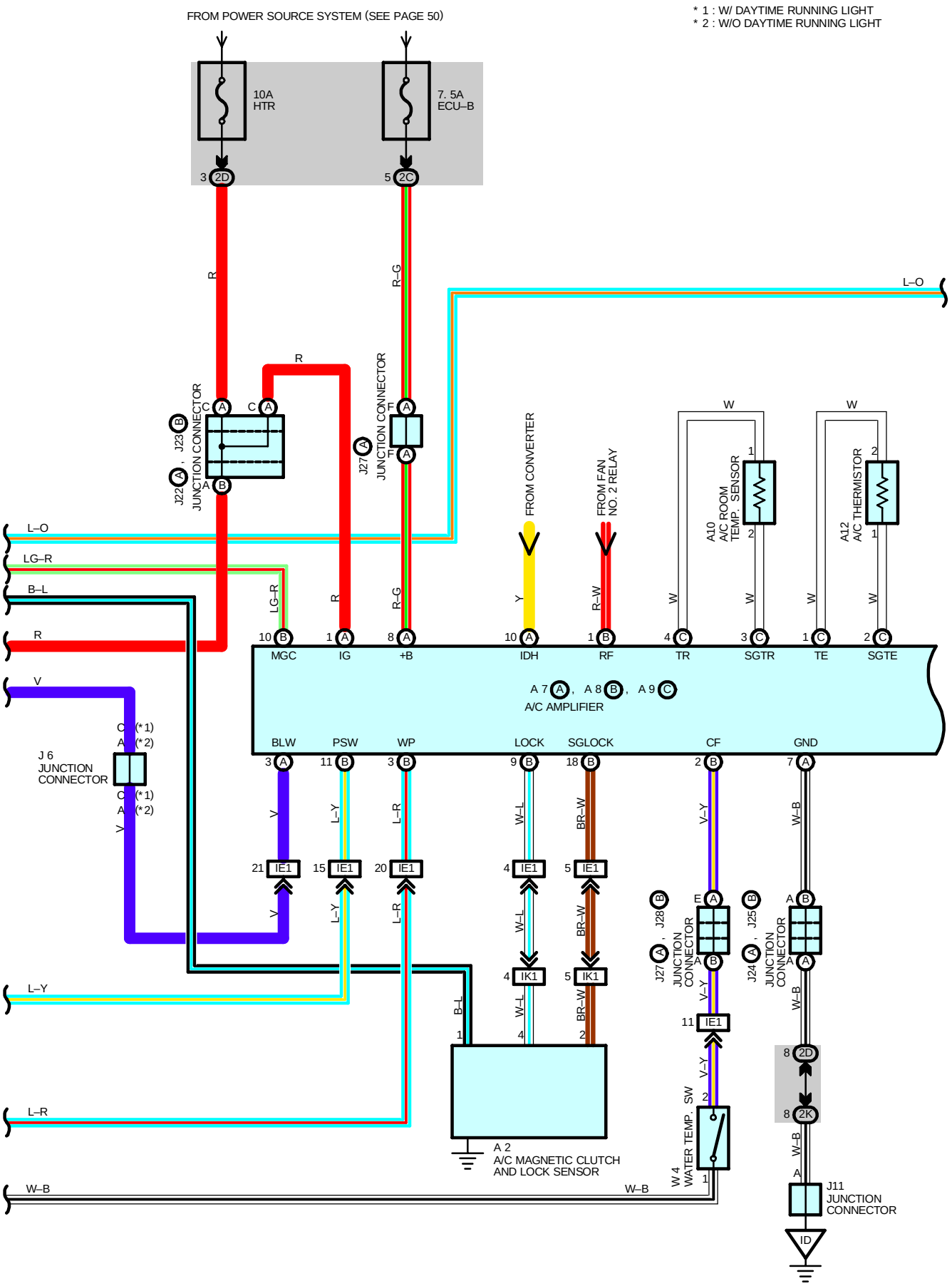

cardiagn.com

AIR CONDITIONING

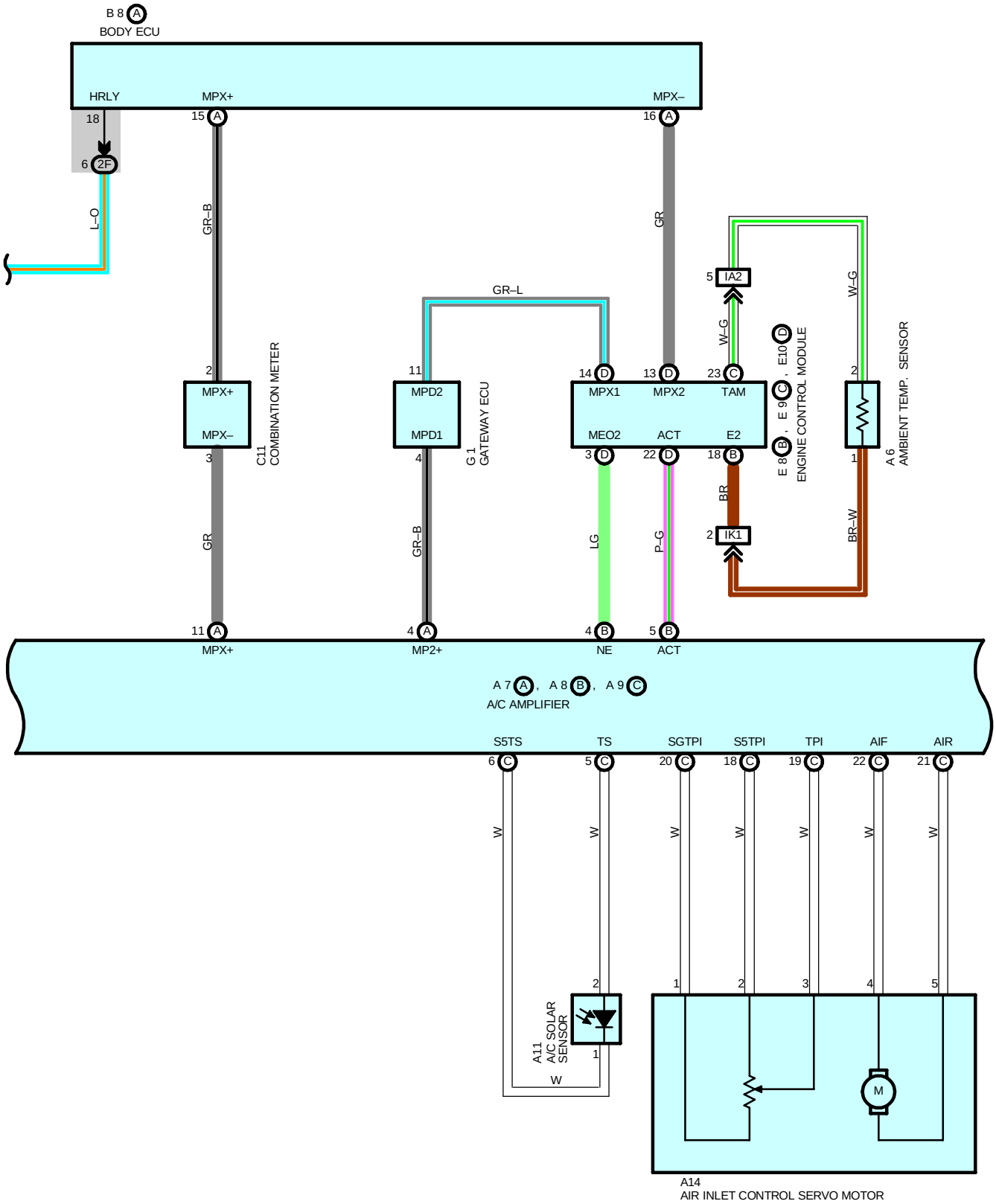

cardiagn.com

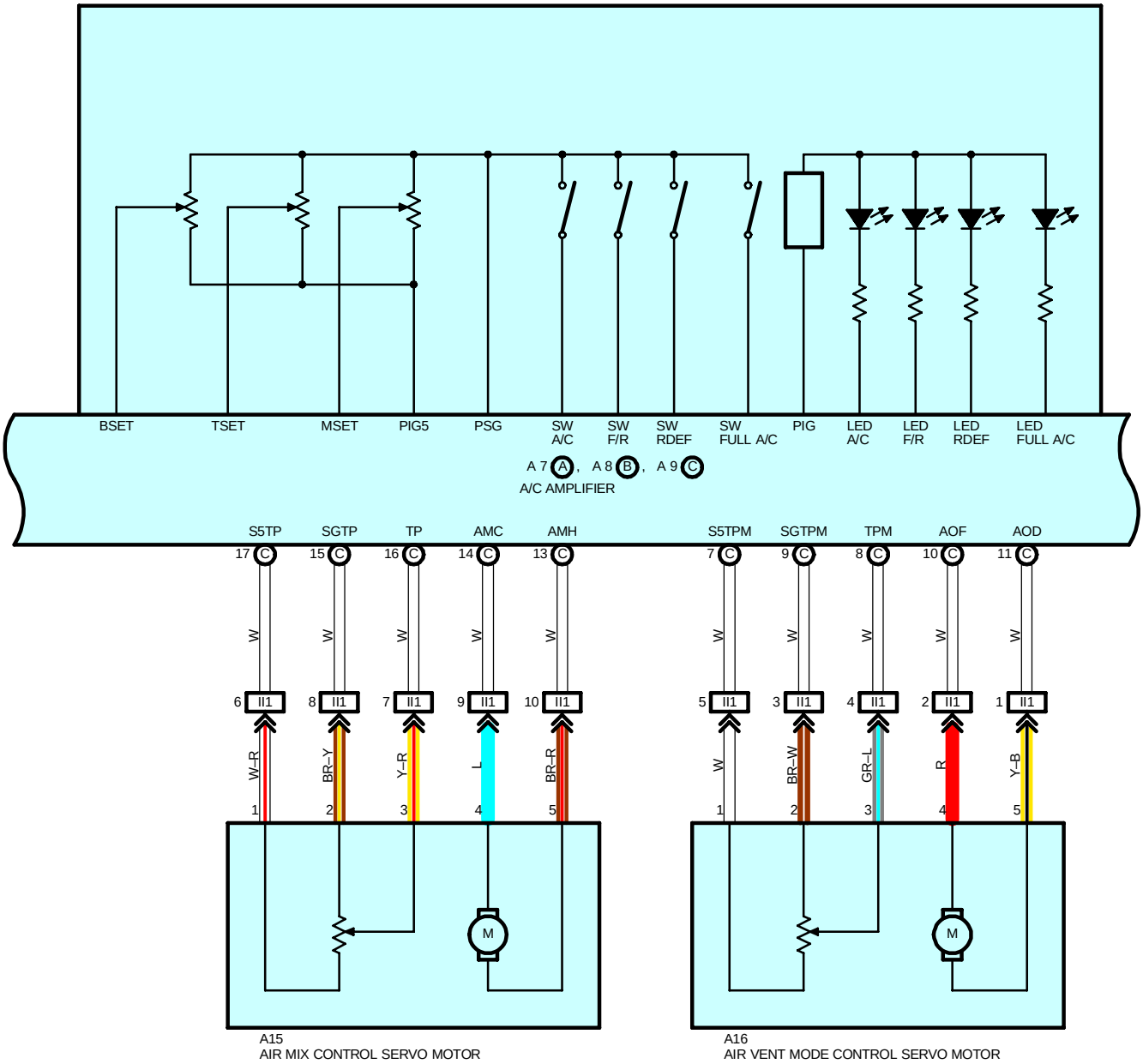

cardiagn.com

AIR CONDITIONING

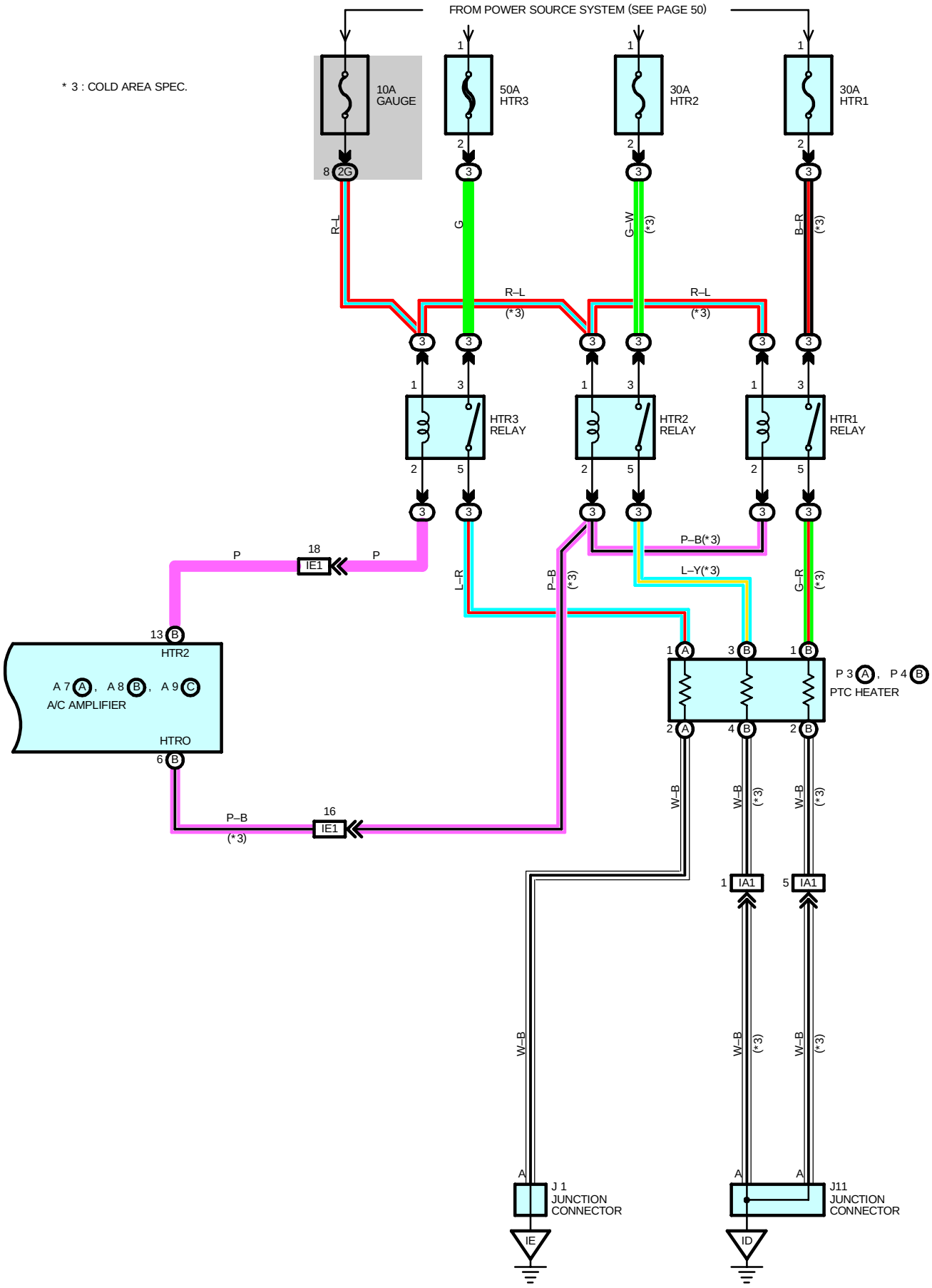

cardiagn.com

SERVICE HINTS

A3 A/C DUAL PRESSURE SW

1–4 : Open with the refrigerant pressure at less than approx. **196** kpa (**2.0** kgf/cm^2, **28.4** psi), or more than approx. **3140** kpa (**32** kgf/cm^2, **455** psi),

A7 (A), A8 (B), A9 (C) A/C AMPLIFIER

(A) 8–GROUND : Always approx. **12** volts
(A) 1–GROUND : Approx. **12** volts with the ignition SW at **ON** position
(A) 7–GROUND : Always continuity

: PARTS LOCATION

Code		See Page	Code		See Page	Code		See Page
A2		34	B6		36	J7		37
A3		34	B7		36	J11		37
A6		34	B8	A	36	J22	A	37
A7	A	36	C11		36	J23	B	37
A8	B	36	E8	B	36	J24	A	37
A9	C	36	E9	C	36	J25	B	37
A10		36	E10	D	36	J27	A	37
A11		36	G1		37	J28	B	37
A12		36	J1		37	P3	A	37
A14		36	J2	A	37	P4	B	37
A15		36	J3	B	37	W2		35
A16		36	J6		37	W4		35

: RELAY BLOCKS

Code	See Page	Relay Blocks (Relay Block Location)
3	24	Engine Room R/B No.3 (Engine Compartment Right)

: JUNCTION BLOCK AND WIRE HARNESS CONNECTOR

Code	See Page	Junction Block and Wire Harness (Connector Location)
1A	27	Engine Wire and Engine Room J/B (Engine Compartment Left)
1F	27	Engine Room Main Wire and Engine Room J/B (Engine Compartment Left)
1J		
1K		
2C	30	Instrument Panel Wire and Instrument Panel J/B (Cowl Side Panel LH)
2D		
2F	31	Engine Room Main Wire and Instrument Panel J/B (Cowl Side Panel LH)
2G		
2K	31	Cowl Wire and Instrument Panel J/B (Cowl Side Panel LH)

: CONNECTOR JOINING WIRE HARNESS AND WIRE HARNESS

Code	See Page	Joining Wire Harness and Wire Harness (Connector Location)
IA1	42	Engine Room Main Wire and Cowl Wire (Cowl Side Panel LH)
IA2		
IE1	42	Instrument Panel Wire and Engine Room Main Wire (Left Kick Panel)
II1	44	Instrument Panel Wire and A/C Sub Wire (Instrument Panel Brace LH)
IK1	44	Engine Wire and Engine Room Main Wire (Right Kick Panel)

: GROUND POINTS

Code	See Page	Ground Points Location
ID	42	Cowl Side Panel LH
IE		

cardiagn.com

: SPLICE POINTS

Code	See Page	Wire Harness with Splice Points	Code	See Page	Wire Harness with Splice Points
E5	40	Engine Room Main Wire			

cardiagn.com

cardiagn.com

I GROUND POINT

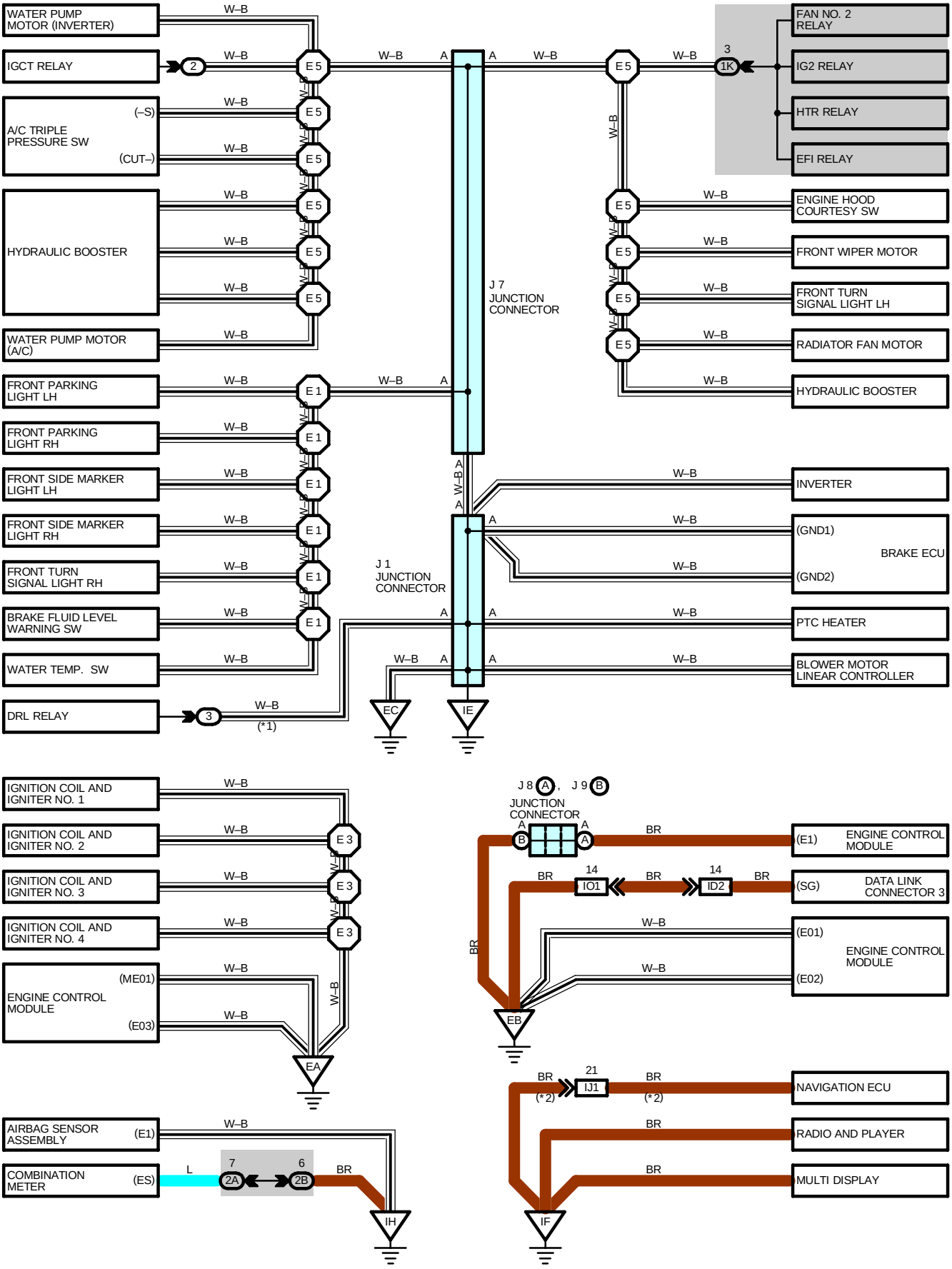

cardiagn.com

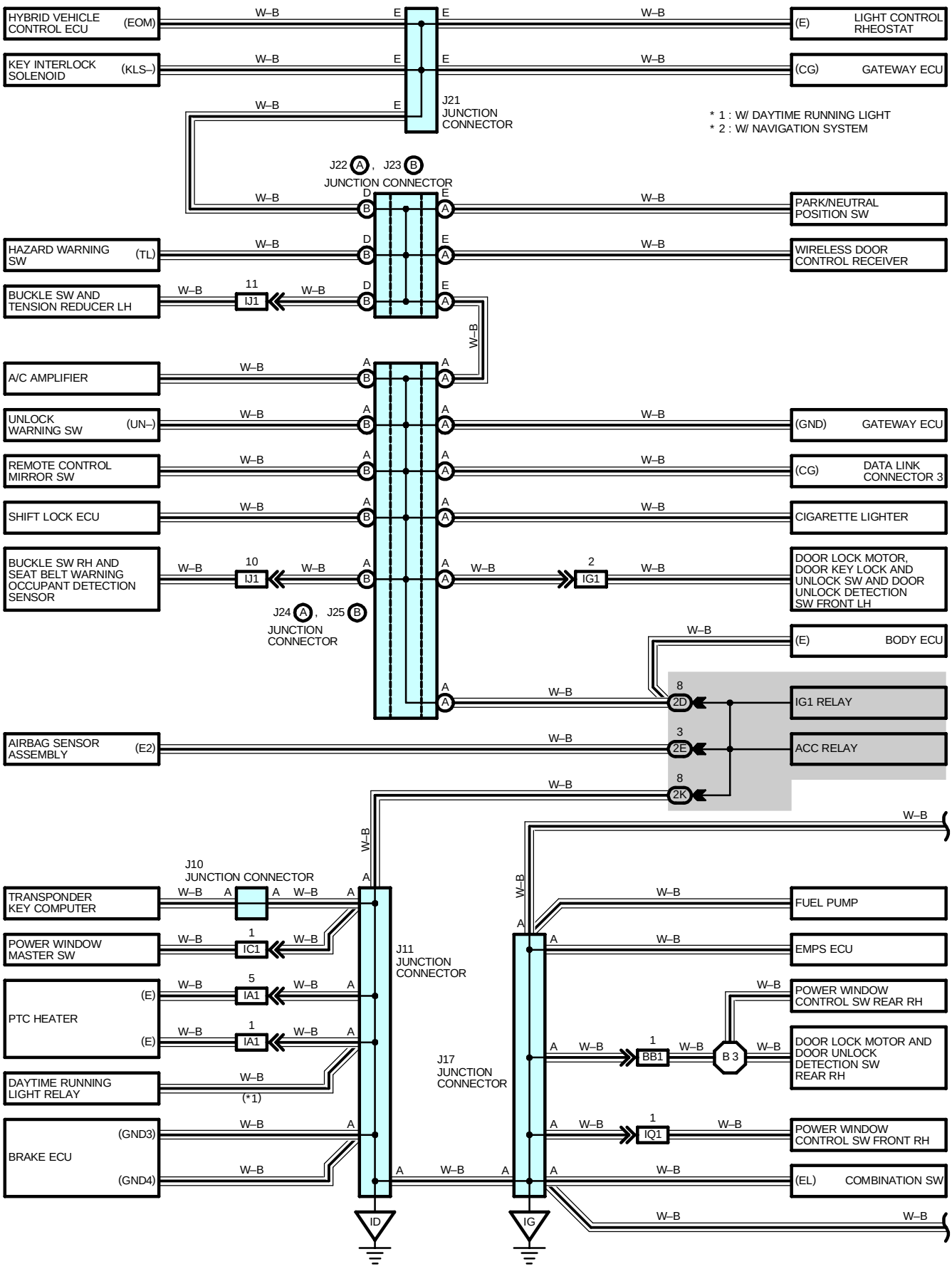

cardiagn.com

I GROUND POINT

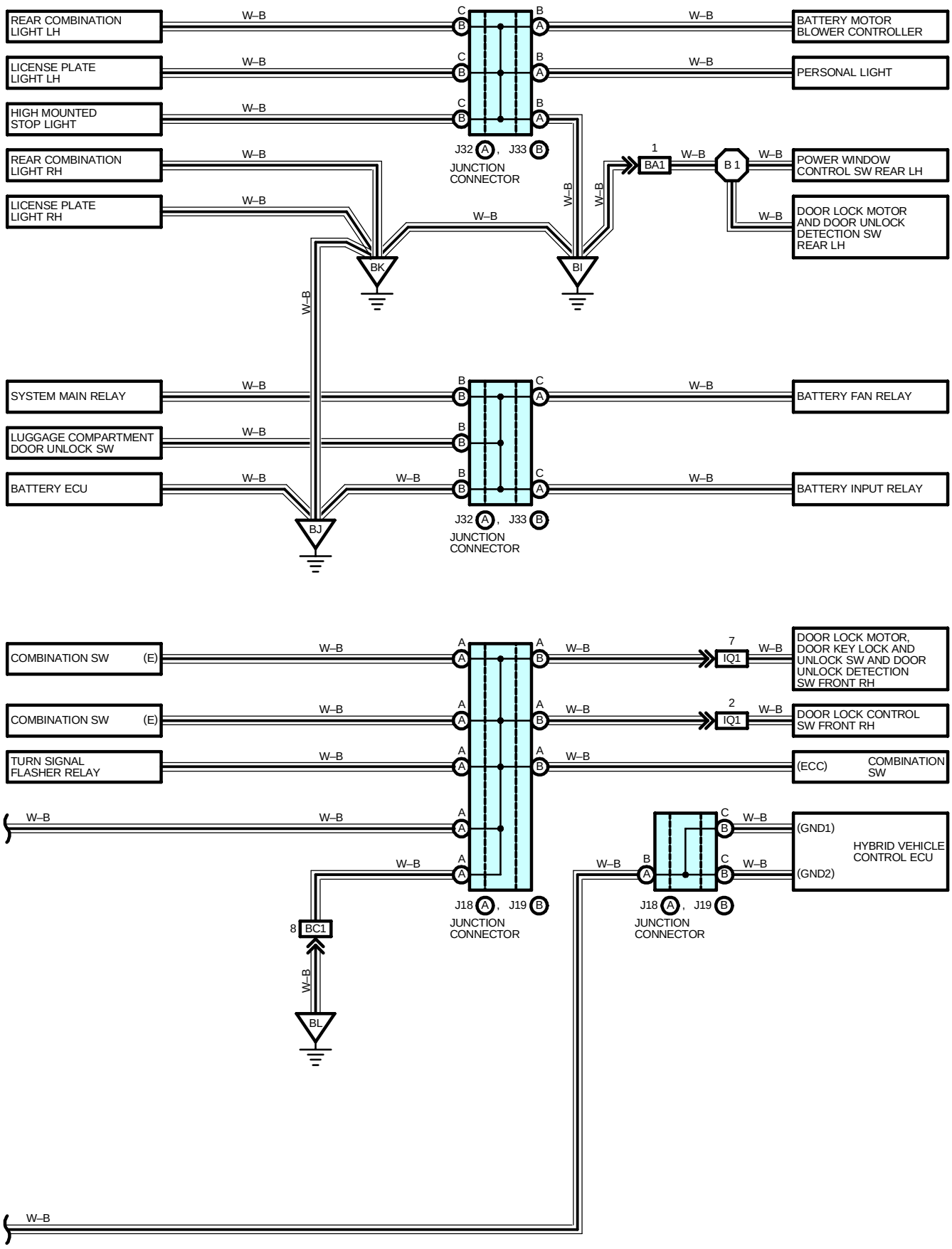

cardiagn.com

: PARTS LOCATION

Code		See Page	Code		See Page	Code		See Page
J1		37	J17		37	J24	A	37
J7		37	J18	A	37	J25	B	37
J8	A	37	J19	B	37	J32	A	38
J9	B	37	J21		37	J33	B	38
J10		37	J22	A	37			
J11		37	J23	B	37			

: RELAY BLOCKS

Code	See Page	Relay Blocks (Relay Block Location)
2	23	Engine Room R/B No.2 (Right Side of Reserve Tank)
3	24	Engine Room R/B No.3 (Engine Compartment Right)

: JUNCTION BLOCK AND WIRE HARNESS CONNECTOR

Code	See Page	Junction Block and Wire Harness (Connector Location)
1K	27	Engine Room Main Wire and Engine Room J/B (Engine Compartment Left)
2A	30	Instrument Panel Wire and Instrument Panel J/B (Cowl Side Panel LH)
2B		
2D		
2E		
2K	31	Cowl Wire and Instrument Panel J/B (Cowl Side Panel LH)

: CONNECTOR JOINING WIRE HARNESS AND WIRE HARNESS

Code	See Page	Joining Wire Harness and Wire Harness (Connector Location)
IA1	42	Engine Room Main Wire and Cowl Wire (Cowl Side Panel LH)
IC1	42	Front Door LH Wire and Cowl Wire (Left Kick Panel)
ID2	42	Instrument Panel Wire and Cowl Wire (Left Kick Panel)
IG1	42	Front Door LH Wire and Instrument Panel Wire (Left Kick Panel)
IJ1	44	Floor No.3 Wire and Instrument Panel Wire (Under the Instrument Panel Center)
IO1	44	Engine Wire and Cowl Wire (Right Kick Panel)
IQ1	44	Front Door RH Wire and Cowl Wire (Right Kick Panel)
BA1	46	Rear Door No.2 Wire and Floor Wire (Center Pillar LH)
BB1	46	Rear Door No.1 Wire and Cowl Wire (Center Pillar RH)
BC1	46	Cowl Wire and Fuel Tank Wire (Near the Fuel Tank)

: GROUND POINTS

Code	See Page	Ground Points Location
EA	40	Engine Block
EB		
EC	40	Engine Compartment Left
ID	42	Cowl Side Panel LH
IE		
IF	42	Left Kick Panel
IG	42	Cowl Side Panel RH
IH	42	Right Kick Panel
BI	46	Left Side of Rear Pillar
BJ	46	Right Side of Rear Pillar
BK	46	Back Panel Center
BL	46	Near the Fuel Tank

cardiagn.com

I GROUND POINT

: SPLICE POINTS

Code	See Page	Wire Harness with Splice Points	Code	See Page	Wire Harness with Splice Points
E1	40	Engine Room Main Wire	B1	46	Rear Door No.2 Wire
E3	40	Engine Wire	B3	46	Rear Door No.1 Wire
E5	40	Engine Room Main Wire			

cardiagn.com

cardiagn.com

J POWER SOURCE (Current Flow Chart)

The chart below shows the route by which current flows from the battery to each electrical source (Fusible Link, Circuit Breaker, Fuse, etc.) and other Parts.

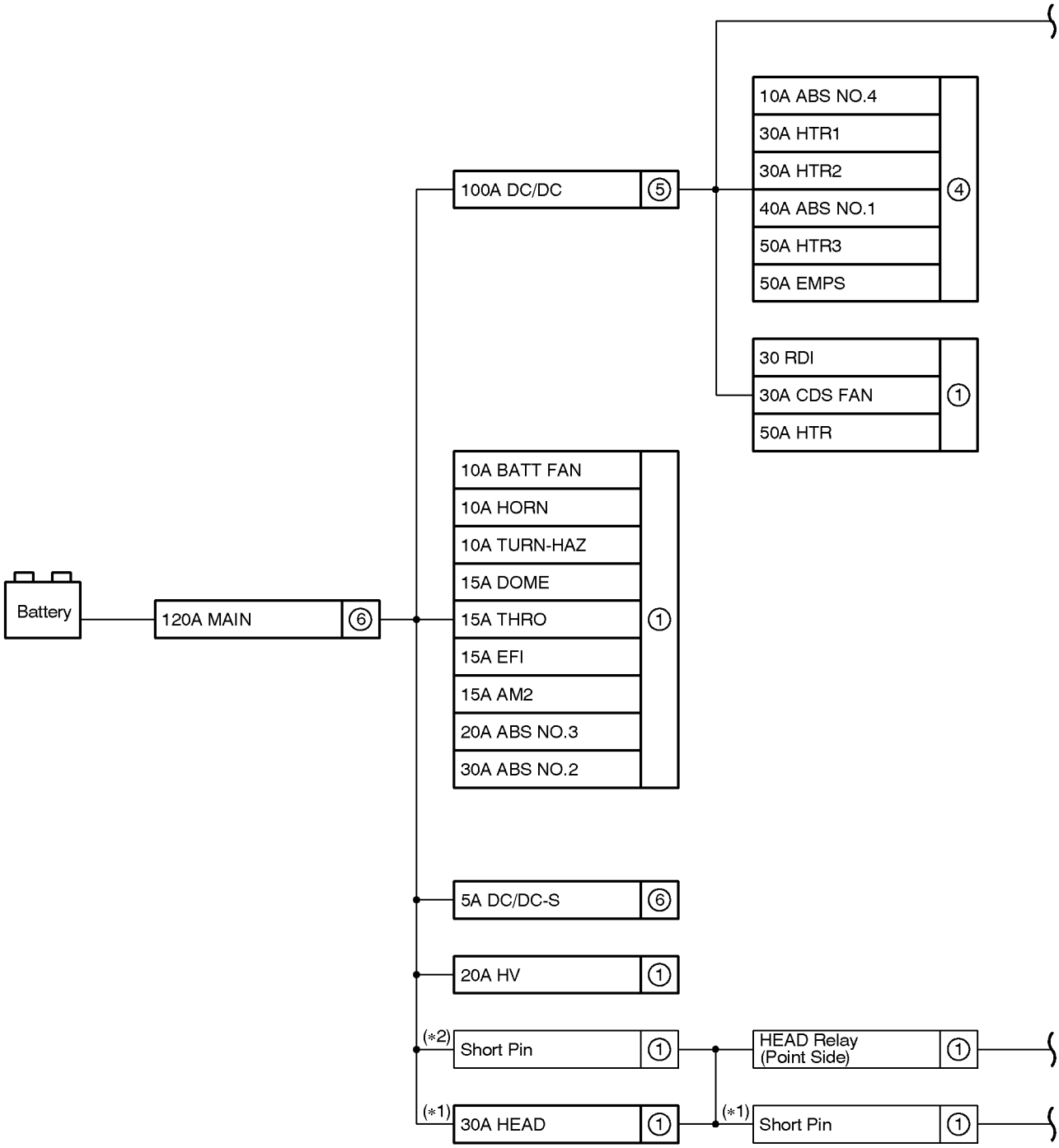

[LOCATION] ① : Engine Room J/B (See Page 26) ② : Instrument Panel J/B (See Page 30)
⑤ : Fusible Link Block No.1 (F10,F11,F12,F13 on See Page 22)

cardiagn.com

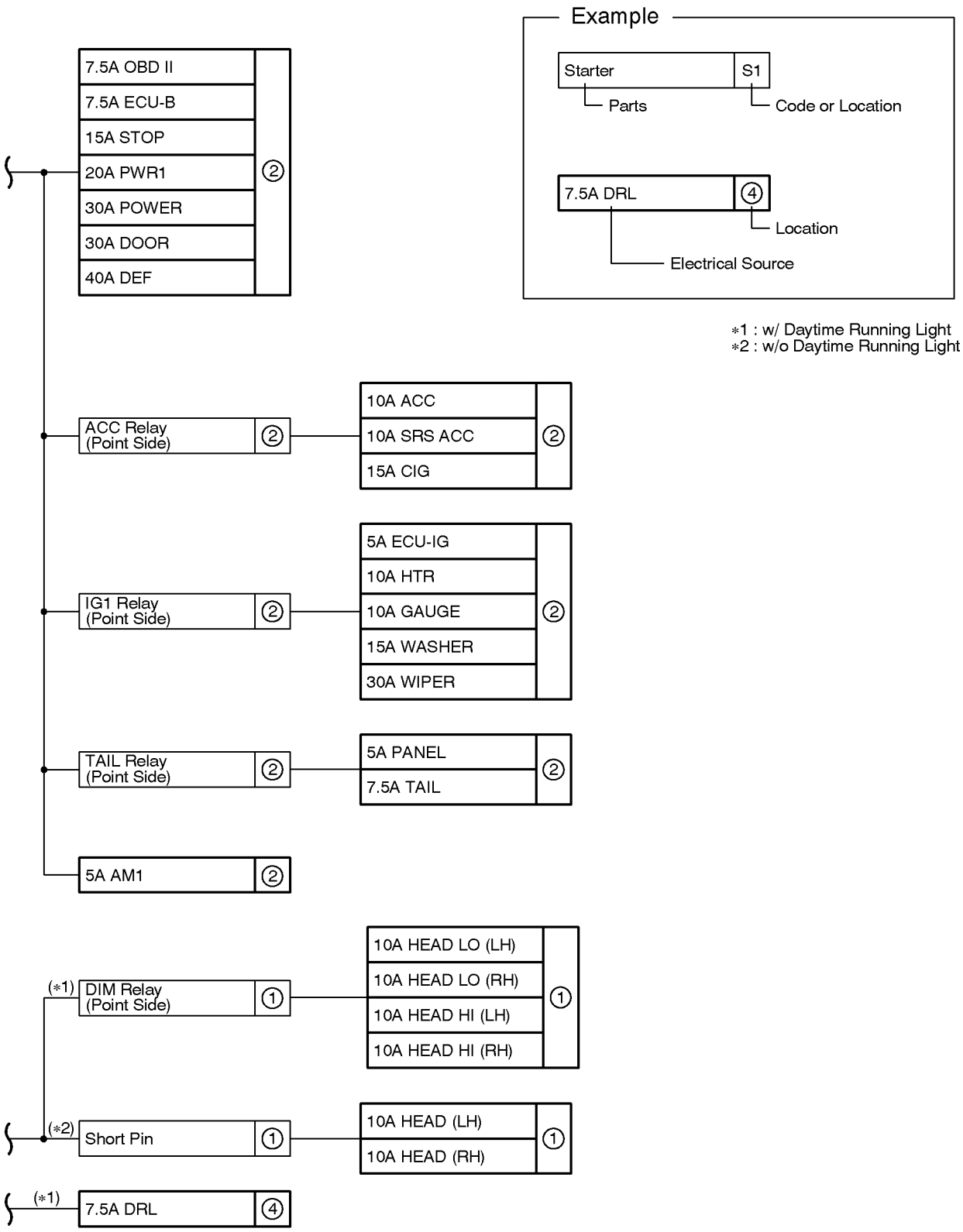

③ : Engine Room R/B No.2 (See Page 23) ④ : Engine Room R/B No.3 (See Page 24)

⑥ : Fusible Link Block No.2 (F17,F18 on See Page 23)

cardiagn.com

Fusible Link Block No.1 (See Page 22)

Fuse		System	Page
100A	DC/DC	Illumination	92
		Key Reminder and Light Reminder Buzzer	114
		Light Auto Turn Off	104
		Taillight	88
		TOYOTA Hybrid System	54

Fusible Link Block No.2 (See Page 23)

Fuse		System	Page
5A	DC/DC–S	TOYOTA Hybrid System	54
120A	MAIN	ABS	172
		Engine Control	68
		Headlight (w/o Daytime Running Light)	84
		Hybrid Vehicle Immobiliser System	78
		Illumination	92
		Key Reminder and Light Reminder Buzzer	114
		Light Auto Turn Off	104
		SRS	167
		Taillight	88
		TOYOTA Hybrid System	54

Engine Room R/B No.3 (See Page 24)

Fuse		System	Page
7.5A	DRL	Headlight (w/ Daytime Running Light)	80
10A	ABS NO.4	ABS	172
30A	HTR1	Air Conditioning	188
30A	HTR2	Air Conditioning	188
40A	ABS NO.1	ABS	172
50A	EMPS	EMPS	164
50A	HTR3	Air Conditioning	188

Engine Room J/B (See Page 26)

Fuse		System	Page
10A	BATT FAN	TOYOTA Hybrid System	54
10A	HEAD (LH)	Headlight (w/o Daytime Running Light)	84
10A	HEAD (RH)	Headlight (w/o Daytime Running Light)	84
10A	HEAD HI (LH)	Headlight (w/ Daytime Running Light)	80
10A	HEAD HI (RH)	Headlight (w/ Daytime Running Light)	80
10A	HEAD LO (LH)	Headlight (w/ Daytime Running Light)	80
10A	HEAD LO (RH)	Headlight (w/ Daytime Running Light)	80
10A	HORN	Horn	124
		Theft Deterrent	146
10A	TURN–HAZ	Turn Signal and Hazard Warning Light	96

∗ These are the page numbers of the first page on which the related system is shown.

cardiagn.com

Fuse		System	Page
15A	AM2	ABS	172
		Engine Control	68
		Hybrid Vehicle Immobiliser System	78
		SRS	167
		TOYOTA Hybrid System	54
15A	DOME	Combination Meter	182
		Door Lock Control	134
		Headlight (w/ Daytime Running Light)	80
		Headlight (w/o Daytime Running Light)	84
		Illumination	92
		Interior Light	108
		Key Reminder and Light Reminder Buzzer	114
		Navigation System	156
		Power Window	126
		Radio and Player	152
		Seat Belt Warning	118
		Theft Deterrent	146
		TOYOTA Hybrid System	54
		Wireless Door Lock Control	140
15A	EFI	Engine Control	68
15A	THRO	Engine Control	68
20A	ABS NO.3	ABS	172
20A	HV	TOYOTA Hybrid System	54
30A	ABS NO.2	ABS	172
30A	CDS FAN	Radiator Fan and Condenser Fan	186
30A	HEAD	Headlight (w/ Daytime Running Light)	80
		Key Reminder and Light Reminder Buzzer	114
		Light Auto Turn Off	104
30A	RDI	Radiator Fan and Condenser Fan	186
50A	HTR	Air Conditioning	188

Instrument Panel J/B (See Page 30)

Fuse		System	Page
5A	ECU–IG	ABS	172
		Electric Tension Reducer	162
		EMPS	164
		Gateway System	160
		Navigation System	156
		Radiator Fan and Condenser Fan	186
		Shift Lock	132
5A	PANEL	Illumination	92
7.5A	ECU–B	Air Conditioning	188
		Combination Meter	182

∗ These are the page numbers of the first page on which the related system is shown.

cardiagn.com

J POWER SOURCE (Current Flow Chart)

Fuse		System	Page
7.5A	ECU–B	Door Lock Control	134
		EMPS	164
		Gateway System	160
		Headlight (w/ Daytime Running Light)	80
		Hybrid Vehicle Immobiliser System	78
		Interior Light	108
		Key Reminder and Light Reminder Buzzer	114
		Light Auto Turn Off	104
		Power Window	126
		Theft Deterrent	146
		Wireless Door Lock Control	140
7.5A	OBDII	Engine Control	68
		Theft Deterrent	146
7.5A	TAIL	Key Reminder and Light Reminder Buzzer	114
		Light Auto Turn Off	104
		Taillight	88
10A	ACC	Combination Meter	182
		Gateway System	160
		Navigation System	156
		Radio and Player	152
		Remote Control Mirror	130
		Shift Lock	132
		SRS	167
10A	GAUGE	ABS	172
		Air Conditioning	188
		Back–Up Light	102
		Combination Meter	182
		Door Lock Control	134
		EMPS	164
		Engine Control	68
		Headlight (w/ Daytime Running Light)	80
		Key Reminder and Light Reminder Buzzer	114
		Light Auto Turn Off	104
		Navigation System	156
		Power Window	126
		Rear Window Defogger	180
		Seat Belt Warning	118
		Theft Deterrent	146
		TOYOTA Hybrid System	54
		Turn Signal and Hazard Warning Light	96
		Wireless Door Lock Control	140
10A	HTR	Air Conditioning	188
10A	SRS ACC	SRS	167

∗ These are the page numbers of the first page on which the related system is shown.

cardiagn.com

Fuse		System	Page
15A	CIG	Cigarette Lighter	122
15A	STOP	ABS Engine Control Shift Lock Stop Light	172 68 132 100
15A	WASHER	Wiper and Washer	120
20A	PWR1	Power Window	126
30A	DOOR	Door Lock Control Theft Deterrent Wireless Door Lock Control	134 146 140
30A	POWER	Power Window	126
30A	WIPER	Wiper and Washer	120
40A	DEF	Rear Window Defogger	180

∗ These are the page numbers of the first page on which the related system is shown.

cardiagn.com

K CONNECTOR LIST

A1
BLACK

A2
GRAY

A3
BLACK

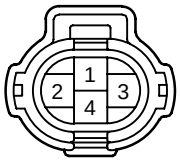

A4
GRAY

A5
GRAY

A6
BLACK

A7

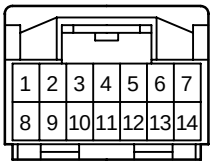

A8

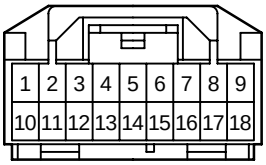

A9

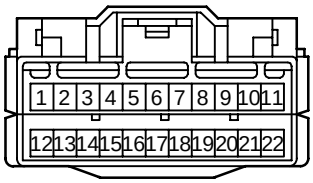

A10

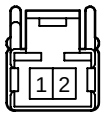

A11

A12

A13
BLACK

A14

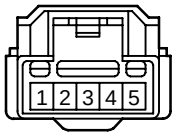

A15
BLACK

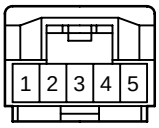

A16

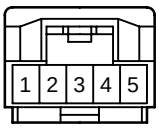

A17
YELLOW

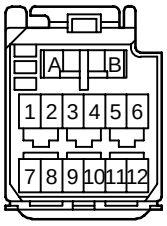

A18
YELLOW

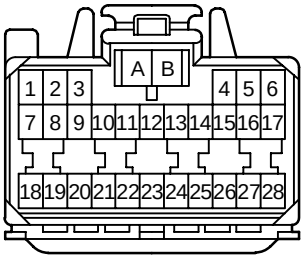

A19
YELLOW

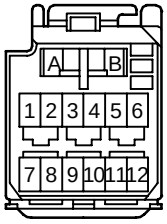

A20
YELLOW

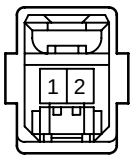

A21
YELLOW

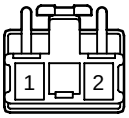

A22
BLACK

A23

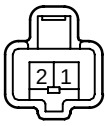

A24

B1
GRAY

B2
BLACK

B3
BLACK

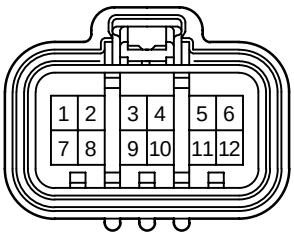

B4
GRAY

B5
BROWN

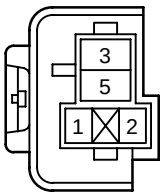

B6

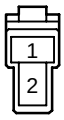

B7
BLACK

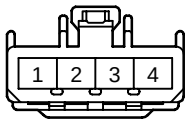

cardiagn.com

B8

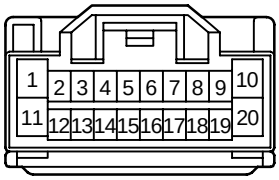

B9

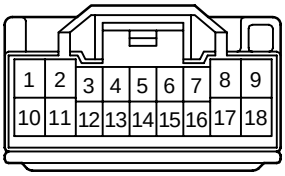

B10

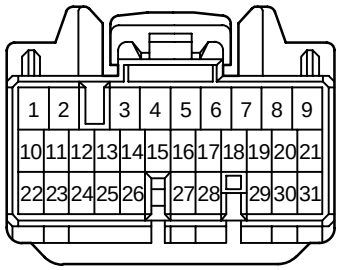

B11
BLACK

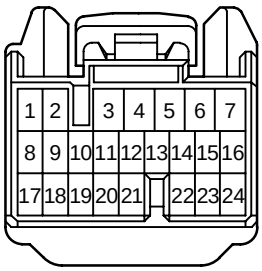

B12

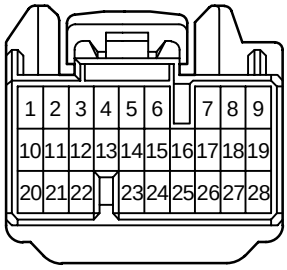

B13
BLACK

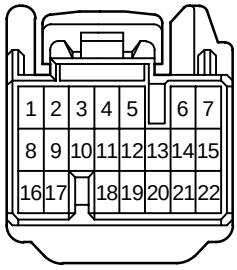

B14
BLACK

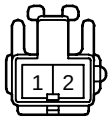

B15
BLACK

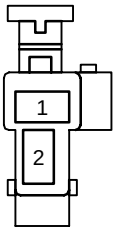

B16

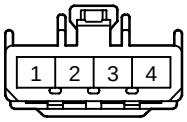

B17

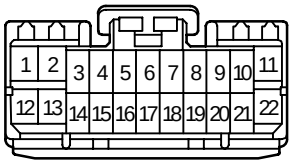

B18

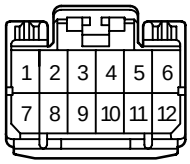

B19
BROWN

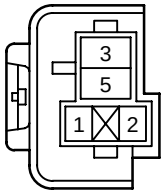

B20

B21

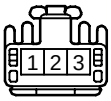

B22
BLACK

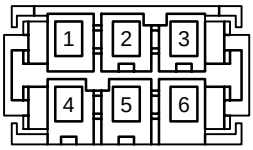

C1
BLACK

C2
BLACK

C3
YELLOW

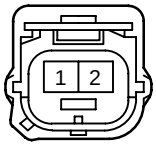

C4
GRAY

C5
GRAY

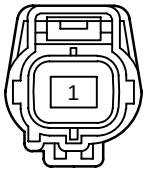

C6
BLACK

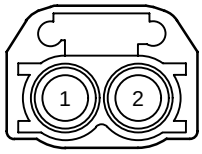

C7

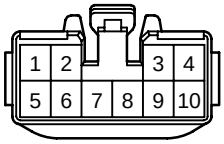

C8

C10

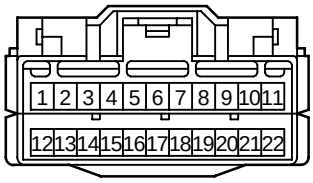

C11

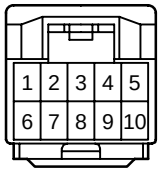

C12
BLACK

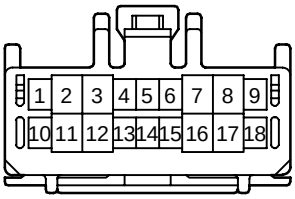

cardiagn.com

K CONNECTOR LIST

C13

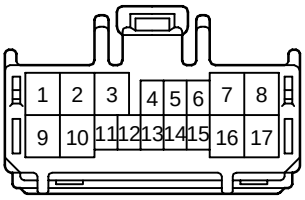

C14

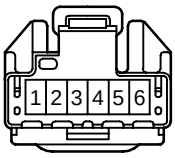

D1
GRAY

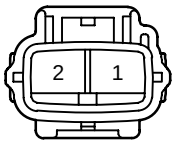

D2

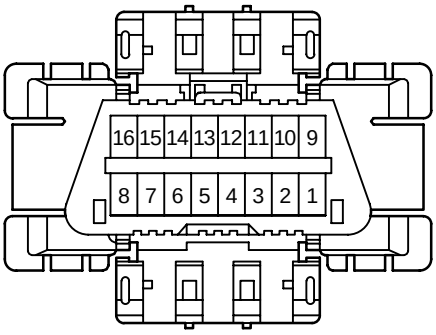

D3

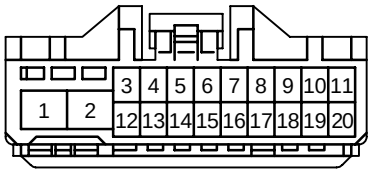

D4
BLACK

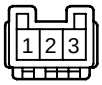

D5
BLACK

D6

D7

D8

D9

D10
BLACK

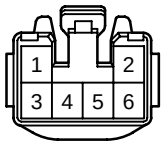

D11
BLACK

D12
BLACK

D13
BLACK

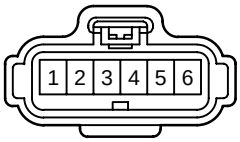

D14
BLACK

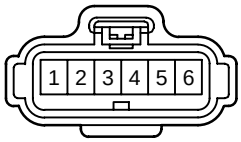

E1
DARK GRAY

E2

E3

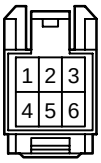

E4

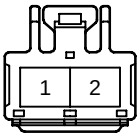

E5
GRAY

E6

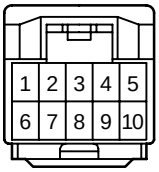

E7
BLACK

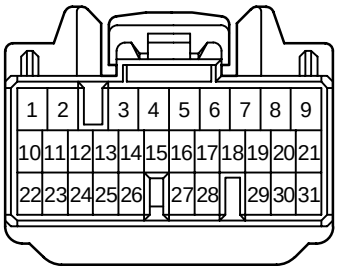

cardiagn.com

E8
BLACK

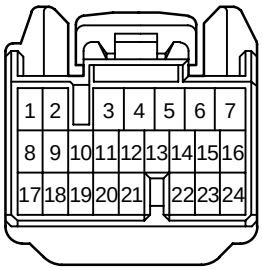

E9
BLACK

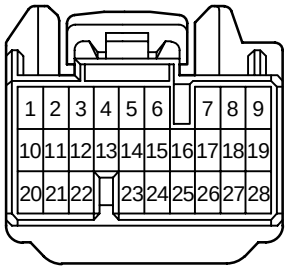

E10
BLACK

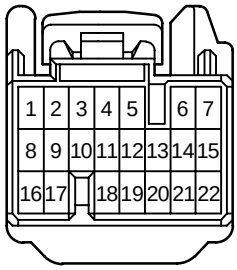

F1
YELLOW

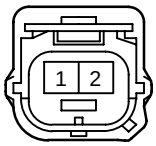

F2
YELLOW

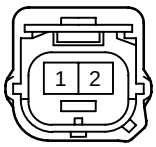

F3
GRAY

F4
GRAY

F5
BLACK

F6
BLACK

F7
GRAY

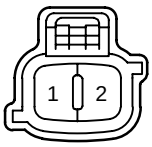

F8
GRAY

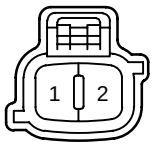

F9
GRAY

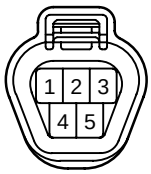

F10

(See Page 22)

F11

(See Page 22)

F12

(See Page 22)

F13
BLACK

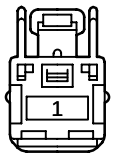

F14

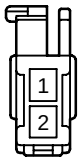

F15

F16
GRAY

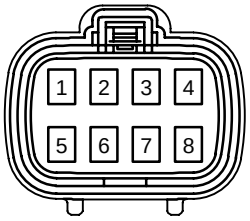

F17

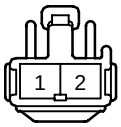

F18
BLACK

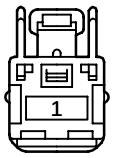

G1
GRAY

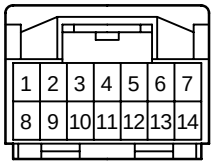

H1
GRAY

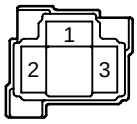

H2
GRAY

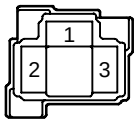

H3
DARK GRAY

H4
BLACK

H5
BLACK

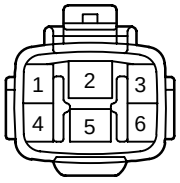

H6
GRAY

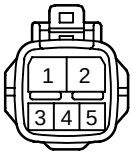

H7

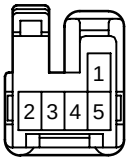

H8

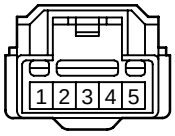

H9
DARK GRAY

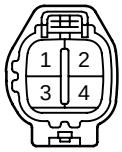

cardiagn.com

K CONNECTOR LIST

H10

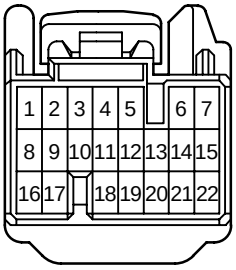

H11
BLACK

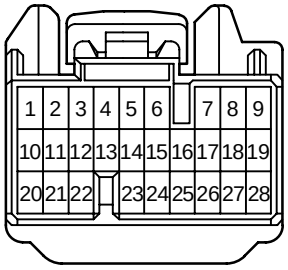

H12

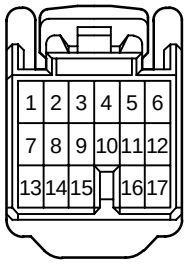

H13
BLACK

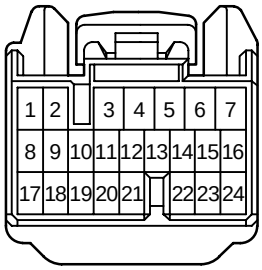

H14

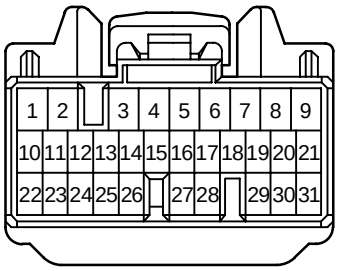

H15

H16

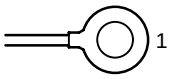

H17

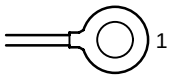

I1
BLACK

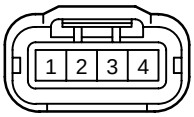

I2
GRAY

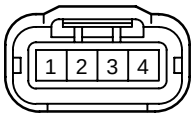

I3
BLACK

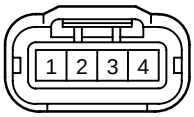

I4
GRAY

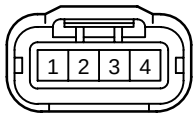

I5
BLACK

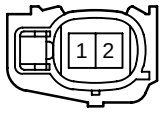

I6
GRAY

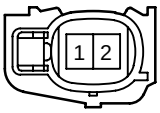

I7
BLACK

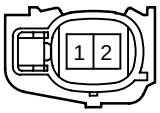

I8
GRAY

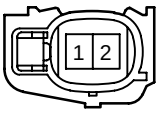

I9
GRAY

I10
GRAY

I11
GRAY

I12
GRAY

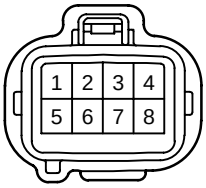

I13
ORANGE

I14
ORANGE

I15

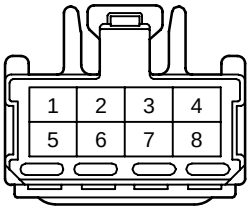

I16
BLACK

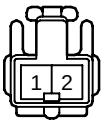

I17

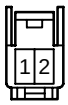

J1

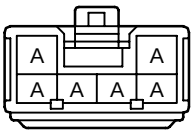

J2

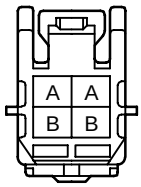

J3

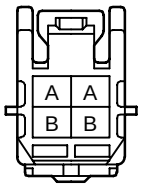

J4

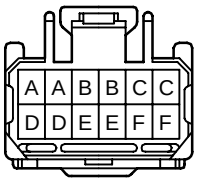

cardiagn.com

J5

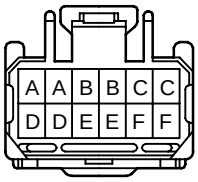

J6
(w/ Daytime Running Light)

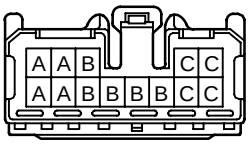

J6
(w/o Daytime Running Light)

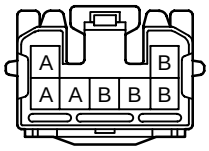

J7
BLUE

J8
GRAY

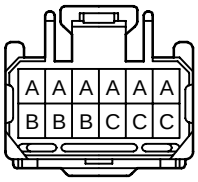

J9
GRAY

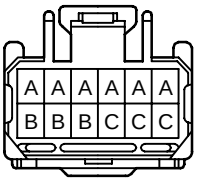

J10
BLACK

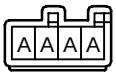

J11

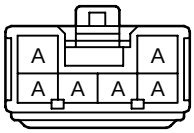

J12

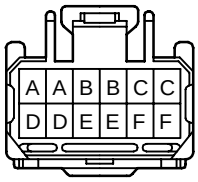

J13

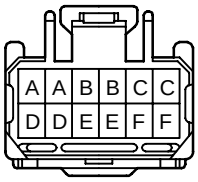

J14
BLACK

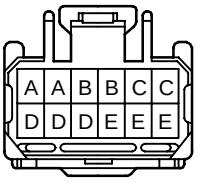

J15
BLACK

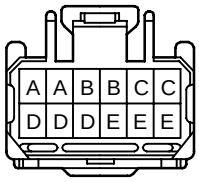

J16

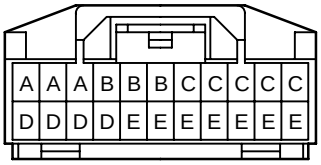

J17

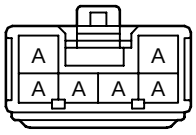

J18
GRAY

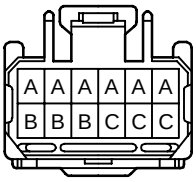

J19
GRAY

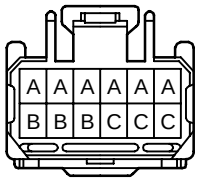

J20

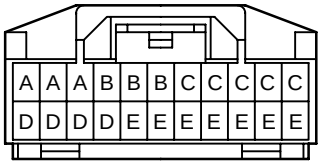

J21

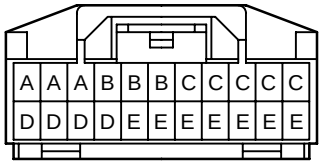

J22
BLACK

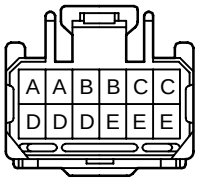

J23
BLACK

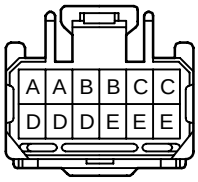

J24
GRAY

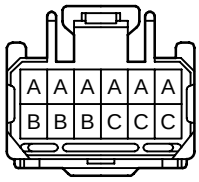

J25
GRAY

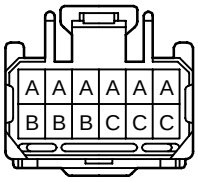

J26

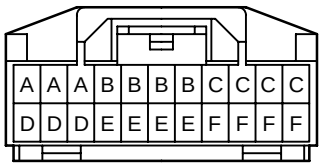

J27
BLUE

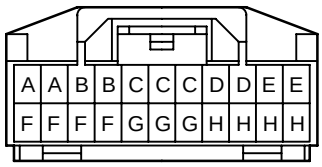

cardiagn.com

K CONNECTOR LIST

J28
BLUE

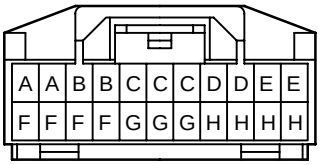

J29
BLACK

J30
BLACK

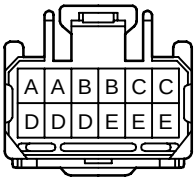

J31
BLACK

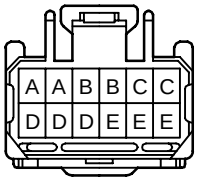

J32
GRAY

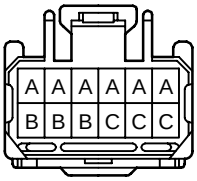

J33
GRAY

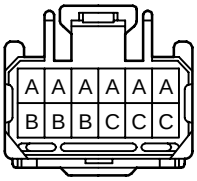

K1
DARK GRAY

L1

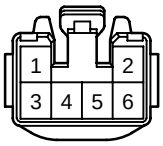

L2
GRAY

L3
GRAY

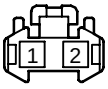

L4

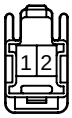

L5

L6

M1
BLACK

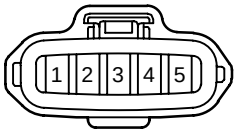

M2
GRAY

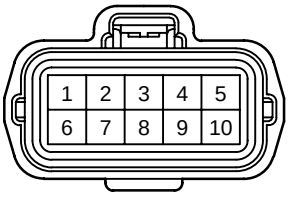

M3
GRAY

M4
GRAY

M5

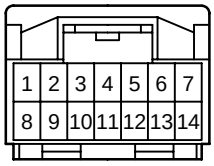

M6
BLUE

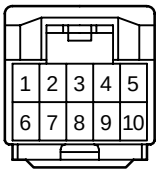

M7
BLUE

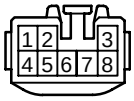

N1
GRAY

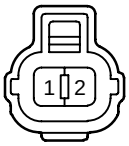

N2

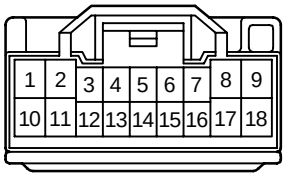

N3

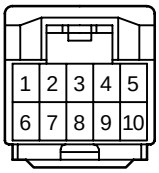

N4

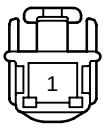

O1
BLACK

P1

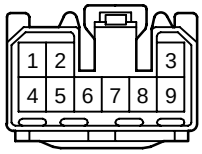

P2

P3

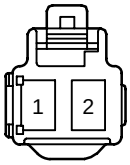

P4

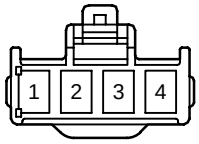

P5

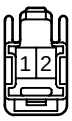

P6

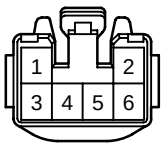

P7
GRAY

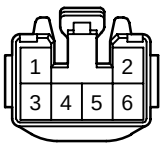

P8

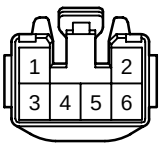

cardiagn.com

P9
BLUE

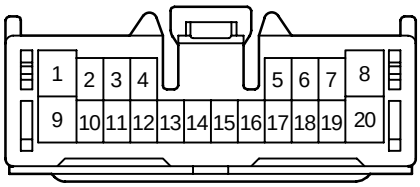

P10
BLACK

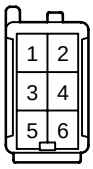

P11

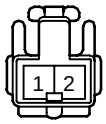

P12

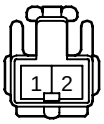

P13

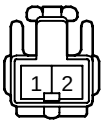

P14
YELLOW

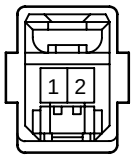

P15
YELLOW

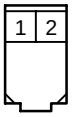

R1
BLACK

R2

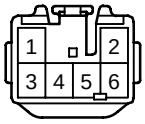

R3

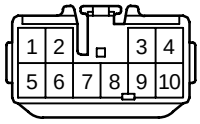

R4

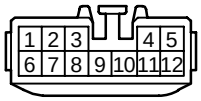

R5

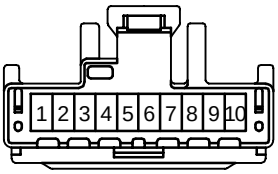

R6

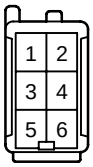

R7

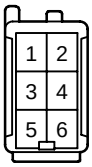

R8

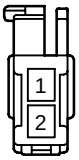

R9

R10

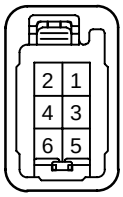

R11

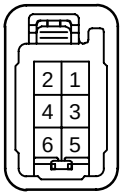

S1
GRAY

S2

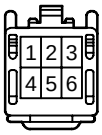

S3

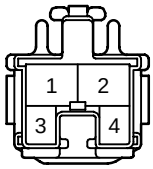

S4
YELLOW

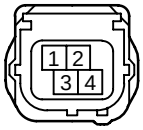

S5
YELLOW

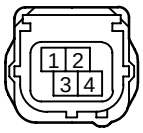

S6
YELLOW

S7
YELLOW

S8

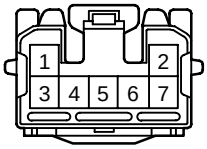

S9

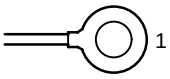

S10

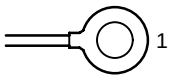

S11

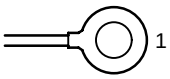

S12

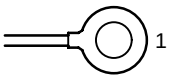

T1
BLACK

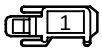

T2
BLACK

T3
BLACK

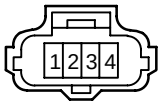

T4

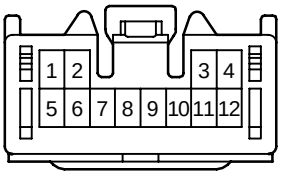

T5
BLACK

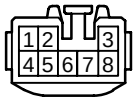

T6

U1

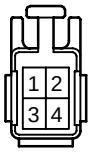

cardiagn.com

K CONNECTOR LIST

V1
BLACK

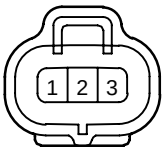

V2
BLUE

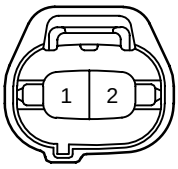

V3
BROWN

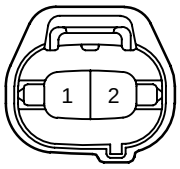

V4
BLACK

V5
BLACK

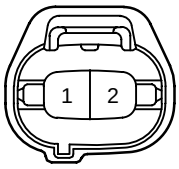

V6
BLUE

W1
BLACK

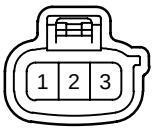

W2
BLACK

W3
GRAY

W4
DARK GRAY

W5

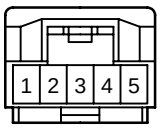

cardiagn.com

cardiagn.com

L PART NUMBER OF CONNECTORS

Code	Part Name	Part Number
A 1	A/C Condenser Fan Motor	90980–11237
A 2	A/C Magnetic Clutch and Lock Sensor	90980–10942
A 3	A/C Triple Pressure SW (A/C Dual and Single Pressure SW)	90980–10943
A 4	ABS Speed Sensor Front LH	90980–11003
A 5	ABS Speed Sensor Front RH	
A 6	Ambient Temp. Sensor	90980–11070
A 7	A/C Amplifier	90980–11911
A 8	A/C Amplifier	90980–11913
A 9	A/C Amplifier	90980–11927
A10	A/C Room Temp. Sensor	90980–11919
A11	A/C Solar Sensor	
A12	A/C Thermistor	
A13	Accel Position Sensor	90980–11144
A14	Air Inlet Control Servo Motor	90980–11921
A15	Air Mix Control Servo Motor	90980–11909
A16	Air Vent Mode Control Servo Motor	
A17	Airbag Sensor Assembly	90980–11869
A18	Airbag Sensor Assembly	90980–11872
A19	Airbag Sensor Assembly	90980–11867
A20	Airbag Squib (Front Passenger Airbag Assembly)	90980–11884
A21	Airbag Squib (Steering Wheel Pad)	90980–10850
A22	Ashtray Illumination	90980–12111
A23	ABS Speed Sensor Rear LH	90980–11060
A24	ABS Speed Sensor Rear RH	
B 1	Brake Actuator	90980–11087
B 2	Brake Actuator	90980–11161
B 3	Brake Actuator	90980–11698
B 4	Brake Fluid Level Warning SW	90980–11207
B 5	Back–Up Light Relay	82660–20340
B 6	Blower Motor	90980–10214
B 7	Blower Motor Linear Controller	90980–11676
B 8	Body ECU	90980–11971
B 9	Body ECU	90980–11973
B10	Brake ECU	90980–11935
B11	Brake ECU	90980–11476
B12	Brake ECU	90980–11637
B13	Brake ECU	90980–11638
B14	Brake Warning Buzzer	90980–10906
B15	Battery Blower Motor	82824–47130
B16	Battery Blower Motor Controller	90980–11676
B17	Battery ECU	90980–11392
B18	Battery ECU	90980–11424
B19	Battery Fan Relay	82660–20340

Code	Part Name	Part Number
B20	Buckle SW and Tension Reducer LH	90980–11471
B21	Buckle SW RH and Seat Belt Warning Occupant Detection Sensor	
B22	Battery Input Relay	90980–12199
C 1	Camshaft Position Sensor	90980–10947
C 2	Camshaft Timing Oil Control Valve	90980–11162
C 3	Circuit Breaker Sensor	90980–11898
C 4	Converter	90980–10942
C 5	Converter	90980–11963
C 6	Crankshaft Position Sensor	90980–12028
C 7	Center Cluster SW	90980–10801
C 8	Cigarette Lighter	90980–10760
C10	Combination Meter	90980–11927
C11	Combination Meter	90980–11923
C12	Combination SW	90980–11594
C13	Combination SW	90980–11672
C14	Combination SW	90980–11616
D 1	DC Motor	90980–10838
D 2	Data Link Connector 3	90980–11665
D 3	Daytime Running Light Relay	90980–12034
D 4	Diode (Door Courtesy)	90980–11251
D 5	Diode (Daytime Running Light)	90980–10962
D 6	Door Courtesy SW Front LH	90980–10871
D 7	Door Courtesy SW Front RH	
D 8	Door Courtesy SW Rear LH	
D 9	Door Courtesy SW Rear RH	
D10	Door Lock Control SW Front RH	90980–10797
D11	Door Lock Motor and Door Unlock Detection SW Rear LH	90980–11150
D12	Door Lock Motor and Door Unlock Detection SW Rear RH	
D13	Door Lock Motor, Door Key Lock and Unlock SW and Door Unlock Detection SW Front LH	90980–11858
D14	Door Lock Motor, Door Key Lock and Unlock SW and Door Unlock Detection SW Front RH	
E 1	Engine Coolant Temp. Sensor	90980–10737
E 2	Engine Hood Courtesy SW	90980–11189
E 3	EMPS ECU	90980–12012
E 4	EMPS ECU	90980–11579
E 5	EMPS ECU	90980–12120
E 6	EMPS ECU	90980–11923
E 7	Engine Control Module	90980–11421
E 8	Engine Control Module	90980–11476
E 9	Engine Control Module	90980–11637

Note: Not all of the above part numbers of the connector are established for the supply.

cardiagn.com

Code	Part Name	Part Number
E10	Engine Control Module	90980–11638
F 1	Front Airbag Sensor LH	90980–11856
F 2	Front Airbag Sensor RH	
F 3	Front Parking Light LH	90980–11162
F 4	Front Parking Light RH	
F 5	Front Side Marker Light LH	
F 6	Front Side Marker Light RH	
F 7	Front Turn Signal Light LH	90980–11019
F 8	Front Turn Signal Light RH	
F 9	Front Wiper Motor	90980–11599
F10	Fusible Link Block No.1	–
F11	Fusible Link Block No.1	
F12	Fusible Link Block No.1	
F13	Fusible Link Block No.1	90980–11775
F14	Front Door Speaker LH	90980–10935
F15	Front Door Speaker RH	
F16	Fuel Pump and Fuel Sender	82824–47160
F17	Fusible Link Block No.2	90980–10916
F18	Fusible Link Block No.2	90980–11775
G 1	Gateway ECU	90980–11911
H 1	Headlight LH	90980–11314
H 2	Headlight RH	
H 3	Heated Oxygen Sensor (Bank 1 Sensor1)	90980–11028
H 4	Horn	90980–10619
H 5	Hydraulic Booster	90980–10939
H 6	Hydraulic Booster	90980–10946
H 7	Hazard Warning SW	90980–11319
H 8	Hazard Warning SW	90980–11921
H 9	Heated Oxygen Sensor (Bank 1 Sensor 2)	90980–11028
H10	Hybrid Vehicle Control ECU	90980–11638
H11	Hybrid Vehicle Control ECU	90980–11637
H12	Hybrid Vehicle Control ECU	90980–11586
H13	Hybrid Vehicle Control ECU	90980–11476
H14	Hybrid Vehicle Control ECU	90980–11421
H15	High Mounted Stop Light	90980–11060
H16	Hybrid Vehicle Battery	–
H17	Hybrid Vehicle Battery	
I 1	Ignition Coil and Igniter No.1	90980–11885
I 2	Ignition Coil and Igniter No.2	
I 3	Ignition Coil and Igniter No.3	
I 4	Ignition Coil and Igniter No.4	
I 5	Injector No.1	90980–11875
I 6	Injector No.2	
I 7	Injector No.3	
I 8	Injector No.4	
I 9	Inverter	90980–11034

Code	Part Name	Part Number
I10	Inverter	90980–10891
I11	Inverter	90980–10988
I12	Inverter	90980–10897
I13	Inverter	90980–11943
I14	Inverter	90980–11944
I15	Ignition SW	90980–11615
I16	Interior Light	90980–10860
I17	Interlock SW	90980–11918
J 1	Junction Connector	90980–10976
J 2	Junction Connector	90980–11742
J 3	Junction Connector	
J 4	Junction Connector	90980–11661
J 5	Junction Connector	
J 6	Junction Connector (w/ Daytime Running Light)	90980–11542
	Junction Connector (w/o Daytime Running Light)	90980–11529
J 7	Junction Connector	90980–10803
J 8	Junction Connector	90980–11661
J 9	Junction Connector	
J10	Junction Connector	90980–11398
J11	Junction Connector	90980–10976
J12	Junction Connector	90980–11661
J13	Junction Connector	
J14	Junction Connector	
J15	Junction Connector	
J16	Junction Connector	90980–11915
J17	Junction Connector	90980–10976
J18	Junction Connector	90980–11661
J19	Junction Connector	
J20	Junction Connector	90980–11915
J21	Junction Connector	
J22	Junction Connector	90980–11661
J23	Junction Connector	
J24	Junction Connector	
J25	Junction Connector	
J26	Junction Connector	90980–11915
J27	Junction Connector	
J28	Junction Connector	
J29	Junction Connector	90980–11398
J30	Junction Connector	90980–11661
J31	Junction Connector	
J32	Junction Connector	
J33	Junction Connector	
K 1	Knock Sensor	90980–11166
L 1	Light Control Rheostat	90980–10797

cardiagn.com

L PART NUMBER OF CONNECTORS

Code	Part Name	Part Number
L 2	License Plate Light LH	90980–11148
L 3	License Plate Light RH	
L 4	Luggage Compartment Door Unlock SW	90980–11212
L 5	Luggage Compartment Light	90980–11148
L 6	Luggage Compartment Light SW	90980–11097
M 1	Mass Air Flow Meter	90980–11317
M 2	Motor Generator No.1	90980–11658
M 3	Motor Generator No.2	90980–11034
M 4	Motor Generator No.2	90980–11143
M 5	Multi Display	90980–11911
M 6	Multi Display	90980–11923
M 7	Multi Display	90980–10799
N 1	Noise Filter (Ignition)	90980–10843
N 2	Navigation ECU	90980–11973
N 3	Navigation ECU	90980–11923
N 4	Noise Filter (Rear Window Defogger)	90980–11259
O 1	Oil Pressure SW	90980–11363
P 1	Park/Neutral Position SW	90980–11535
P 2	Parking Brake SW	90980–11147
P 3	PTC Heater	90980–10903
P 4	PTC Heater	90980–10867
P 5	Personal Light	90980–11212
P 6	Power Window Control SW Front RH	90980–10797
P 7	Power Window Control SW Rear LH	
P 8	Power Window Control SW Rear RH	
P 9	Power Window Master SW	90980–11469
P10	Power Window Motor Front LH	90980–11011
P11	Power Window Motor Front RH	90980–10860
P12	Power Window Motor Rear LH	
P13	Power Window Motor Rear RH	
P14	Pretensioner LH	90980–11884
P15	Pretensioner RH	90980–11862
R 1	Radiator Fan Motor	90980–11237
R 2	Radio and Player	90980–10996
R 3	Radio and Player	90980–10997
R 4	Radio and Player	90980–10803
R 5	Remote Control Mirror SW	90980–11657
R 6	Rear Combination Light LH	90980–11011
R 7	Rear Combination Light RH	
R 8	Rear Speaker LH	90980–10935
R 9	Rear Speaker RH	
R10	Remote Control Mirror LH	90980–11587
R11	Remote Control Mirror RH	
S 1	Steering Shaft Torque Sensor	90980–10942
S 2	Shift Lock ECU	90980–11488
S 3	Stop Light SW	90980–11118

Code	Part Name	Part Number
S 4	Side Airbag Sensor LH	90980–11857
S 5	Side Airbag Sensor RH	
S 6	Side Airbag Squib LH	90980–11864
S 7	Side Airbag Squib RH	
S 8	System Main Relay	90980–11529
S 9	System Main Relay	82675–36050
S10	System Main Relay	
S11	System Main Relay	–
S12	System Main Relay	
T 1	Theft Deterrent Horn	90980–10619
T 2	Throttle Control Motor	90980–11162
T 3	Throttle Position Sensor	90980–10711
T 4	Transponder Key Computer	90980–11475
T 5	Turn Signal Flasher Relay	90980–10799
T 6	Tension Reducer Solenoid	90980–11918
U 1	Unlock Warning SW and Key Interlock Solenoid	90980–10795
V 1	Vacuum Sensor (HC Adsorber and Catalyst System)	90980–10845
V 2	VSV (EVAP)	90980–11156
V 3	VSV (HC Adsorber and Catalyst System)	90980–11149
V 4	Vapor Pressure Sensor	90980–11143
V 5	VSV (Canister Closed Valve)	90980–11156
V 6	VSV (Parge Flow Switching Valve)	90980–11859
W 1	Washer Motor	90980–10981
W 2	Water Pump Motor (A/C)	90980–10887
W 3	Water Pump Motor (Inverter)	90980–11003
W 4	Water Temp. SW	90980–11235
W 5	Wireless Door Control Receiver	90980–11909

Note: Not all of the above part numbers of the connector are established for the supply.

cardiagn.com

Code	Part Name	Part Number	Code	Part Name	Part Number

cardiagn.com

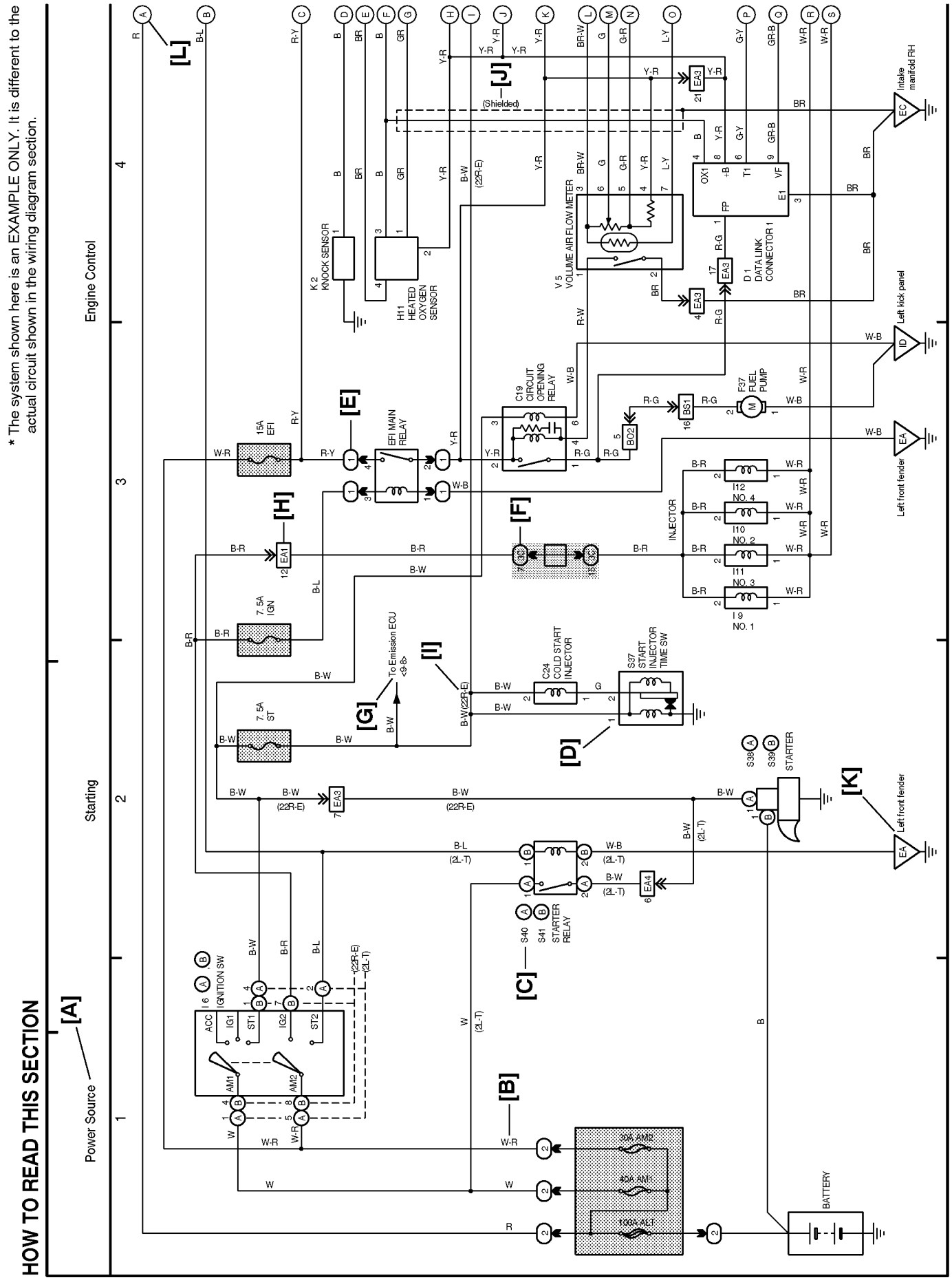

cardiagn.com

[A] : System Title

[B] : Indicates the wiring color.

Wire colors are indicated by an alphabetical code.

B	=	Black	W	=	White	BR	=	Brown
L	=	Blue	V	=	Violet	SB	=	Sky Blue
R	=	Red	O	=	Orange	LG	=	Light Green
P	=	Pink	Y	=	Yellow	GR	=	Gray
G	=	Green						

The first letter indicates the basic wire color and the second letter indicates the color of the stripe.

Example: L – Y

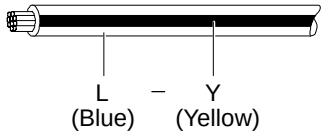

[C] : The position of the parts is the same as shown in the wiring diagram and wire routing.

[D] : Indicates the pin number of the connector. The numbering system is different for female and male connectors.

Example : Numbered in order from upper left to lower right — Numbered in order from upper right to lower left

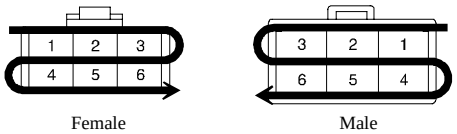

The numbering system for the overall wiring diagram is the same as above

[E] : Indicates a Relay Block. No shading is used and only the Relay Block No. is shown to distinguish it from the J/B.

Example : (1) Indicates Relay Block No.1

[F] : Junction Block (The number in the circle is the J/B No. and the connector code is shown beside it). Junction Blocks are shaded to clearly separate them from other parts.

Example:

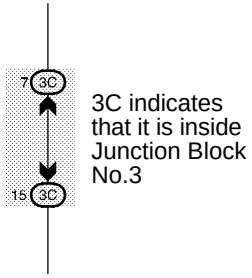

[G] : Indicates related system.

[H] : Indicates the wiring harness and wiring harness connector. The wiring harness with male terminal is shown with arrows (⩔). Outside numerals are pin numbers.

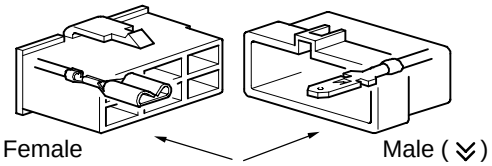

[I] : ( ) is used to indicate different wiring and connector, etc. when the vehicle model, engine type, or specification is different.

[J] : Indicates a shielded cable.

[K] : Indicates and located on ground point.

[L] : The same code occuring on the next page indicates that the wire harness is continuous.

cardiagn.com

SYSTEM INDEX

SYSTEMS	LOCATION
ABS	19–3
Air Conditioning	24–2
Back–Up Light	6–2
Cigarette Lighter	11–4
Combination Meter	23–2
Door Lock Control	15–2
Electric Tension Reducer	13–4
EMPS	20–3
Engine Control	2–3
Gateway System	14–8
Headlight (w/ Daytime Running Light)	4–2
Headlight (w/o Daytime Running Light)	3–2
Horn	12–2
Hybrid Vehicle Immobiliser System	2–16
Illumination	8–2
Interior Light	10–3
Key Reminder	9–2
Light Auto Turn Off	9–3
Light Reminder Buzzer	9–2
Navigation System	14–5
Power Source	1~24–1
Power Window	18–2
Radiator Fan and Condenser Fan	22–3
Radio and Player	14–2
Rear Window Defogger	22–2
Remote Control Mirror	11–2
Seat Belt Warning	9–4
Shift Lock	13–3
SRS	21–2
Stop Light	3–4
Taillight	7–2
Theft Deterrent	17–2
TOYOTA Hybrid System ∗ Charging ∗ Cruise Control ∗ Regenerative Brake	1–2
Turn Signal and Hazard Warning Light	5–2
Wiper and Washer	12–3
Wireless Door Lock Control	16–2

cardiagn.com

(Cont. next page)

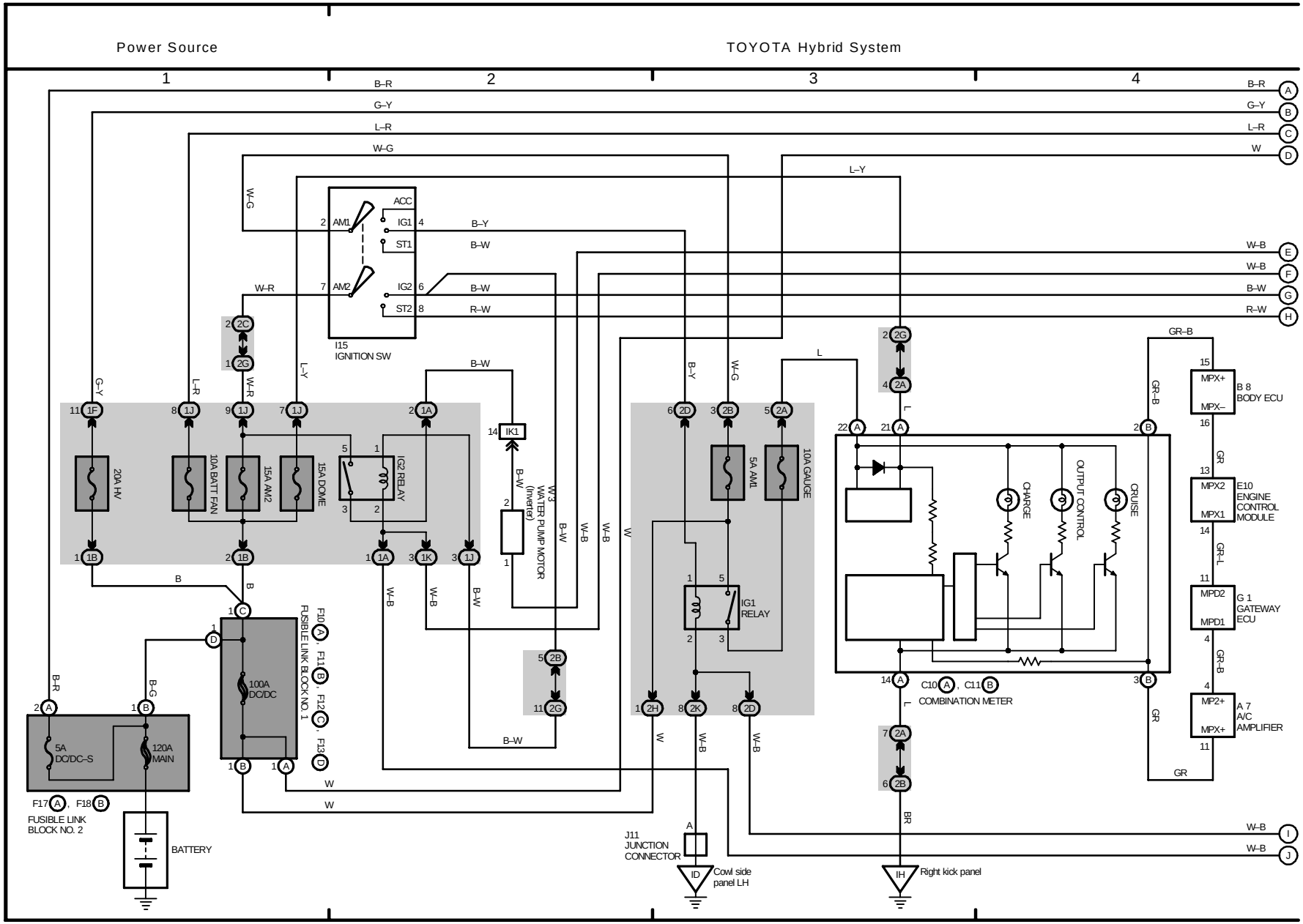

cardiagn.com

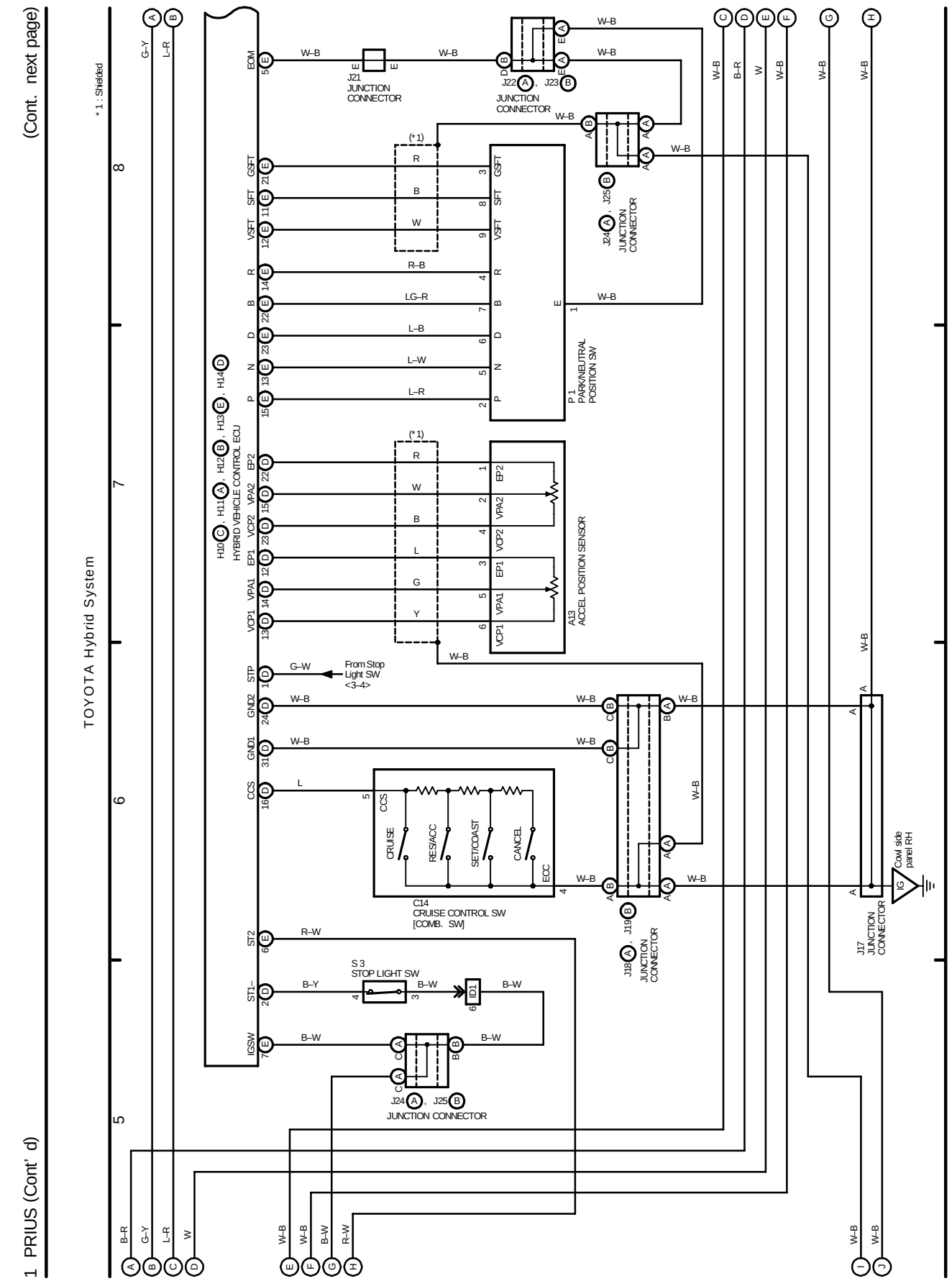

cardiagn.com

(Cont. next page)

TOYOTA Hybrid System

* 1 : Shielded

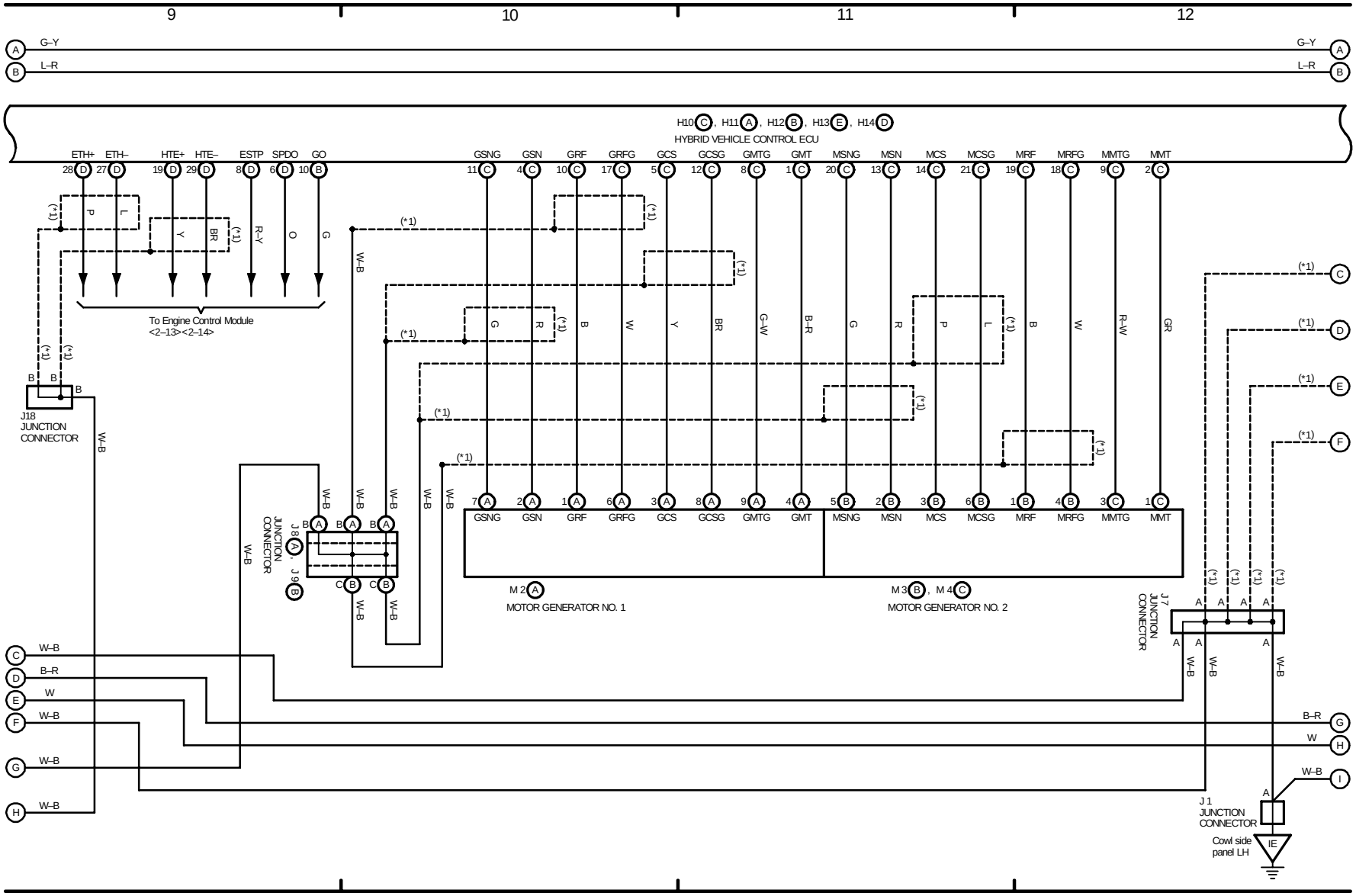

cardiagn.com

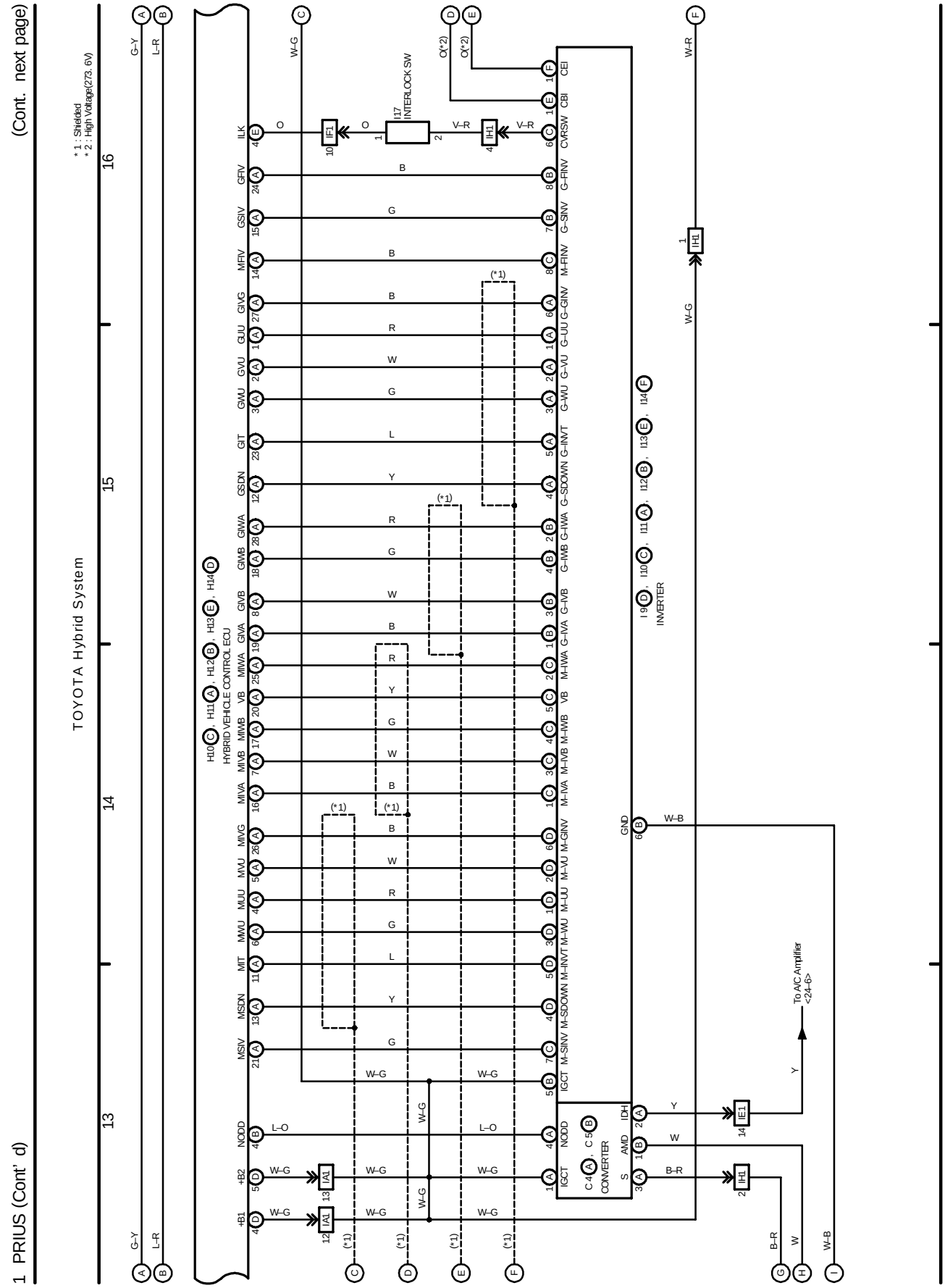

cardiagn.com

(Cont. next page)

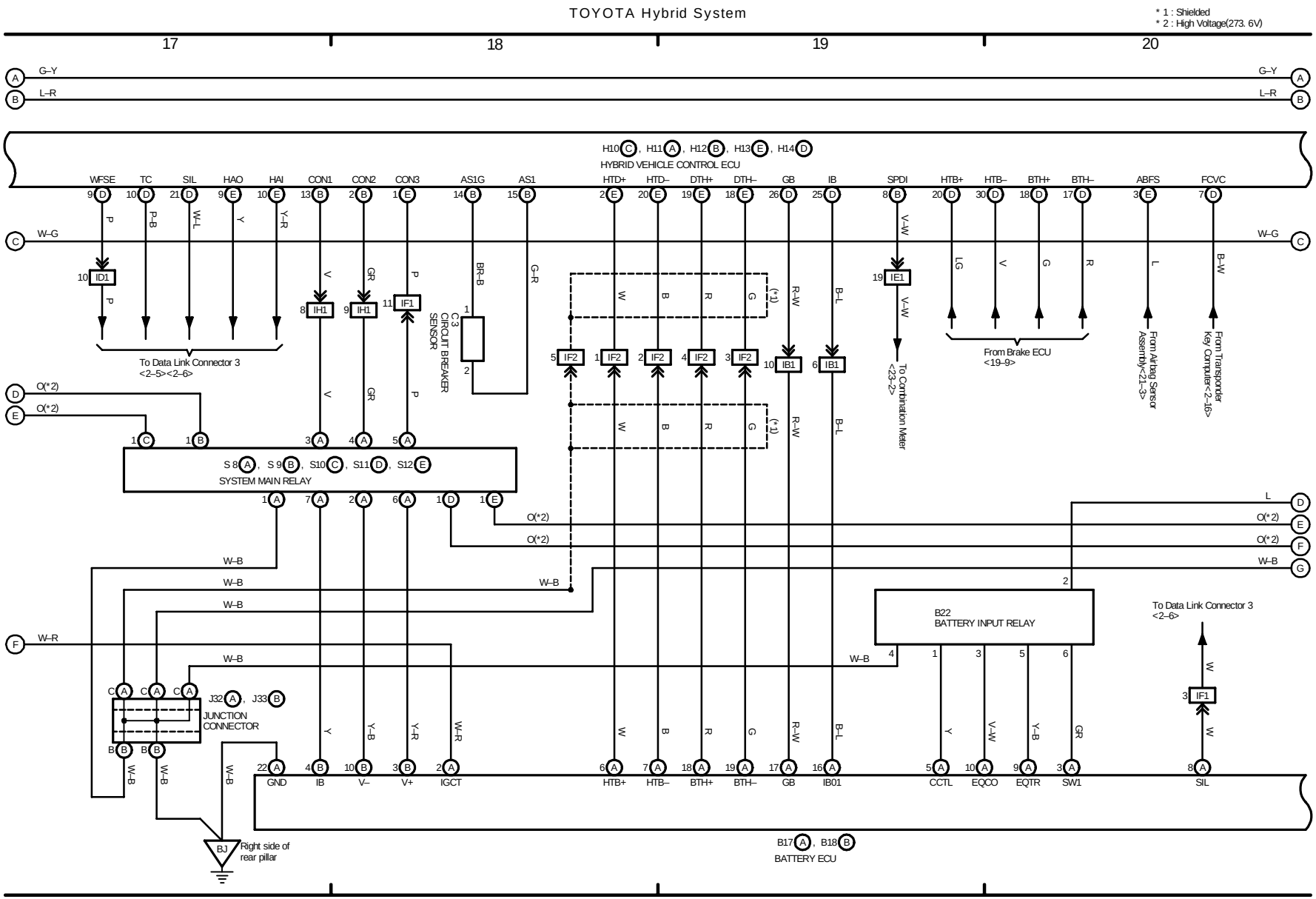

cardiagn.com

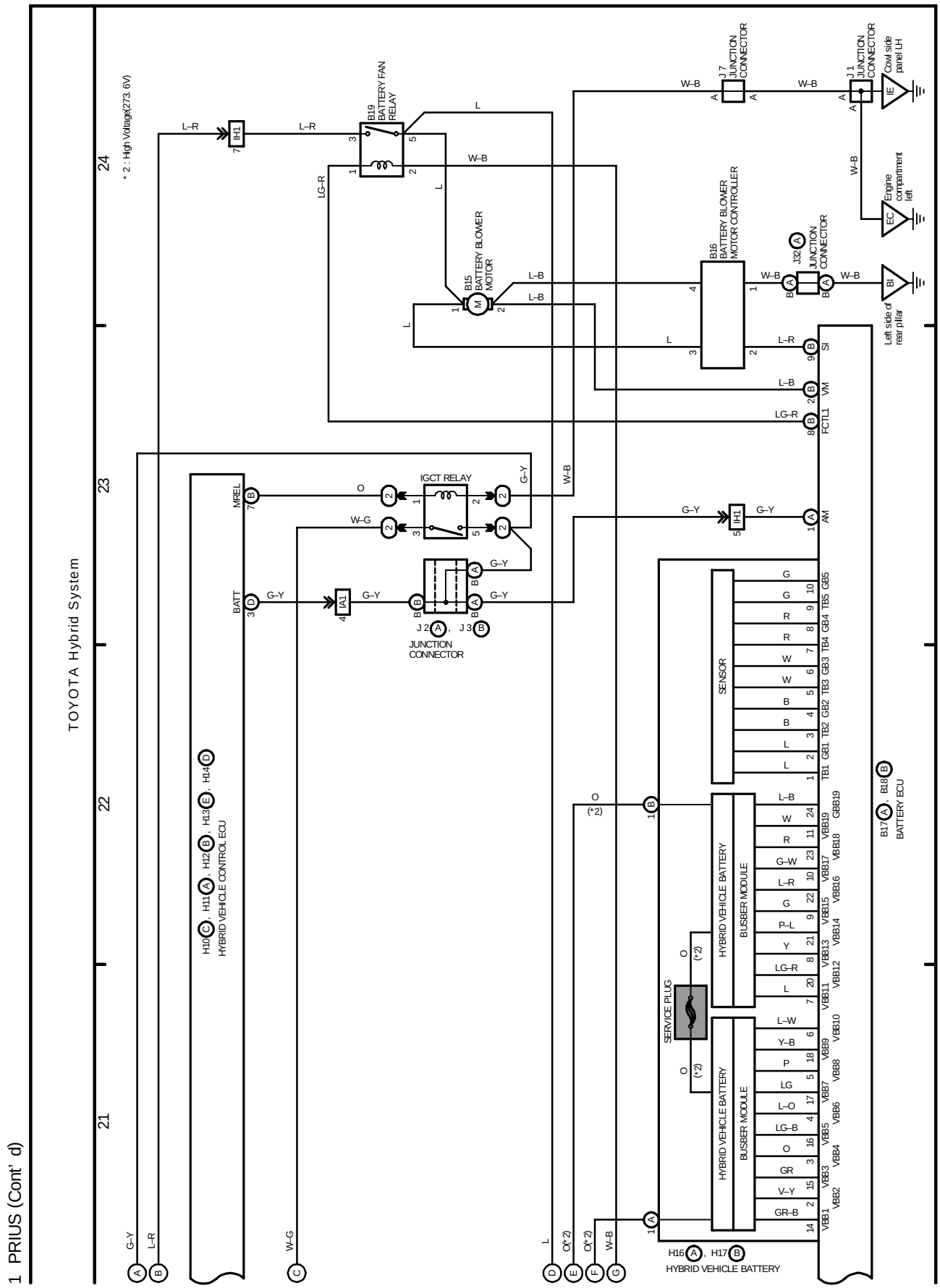

cardiagn.com

cardiagn.com

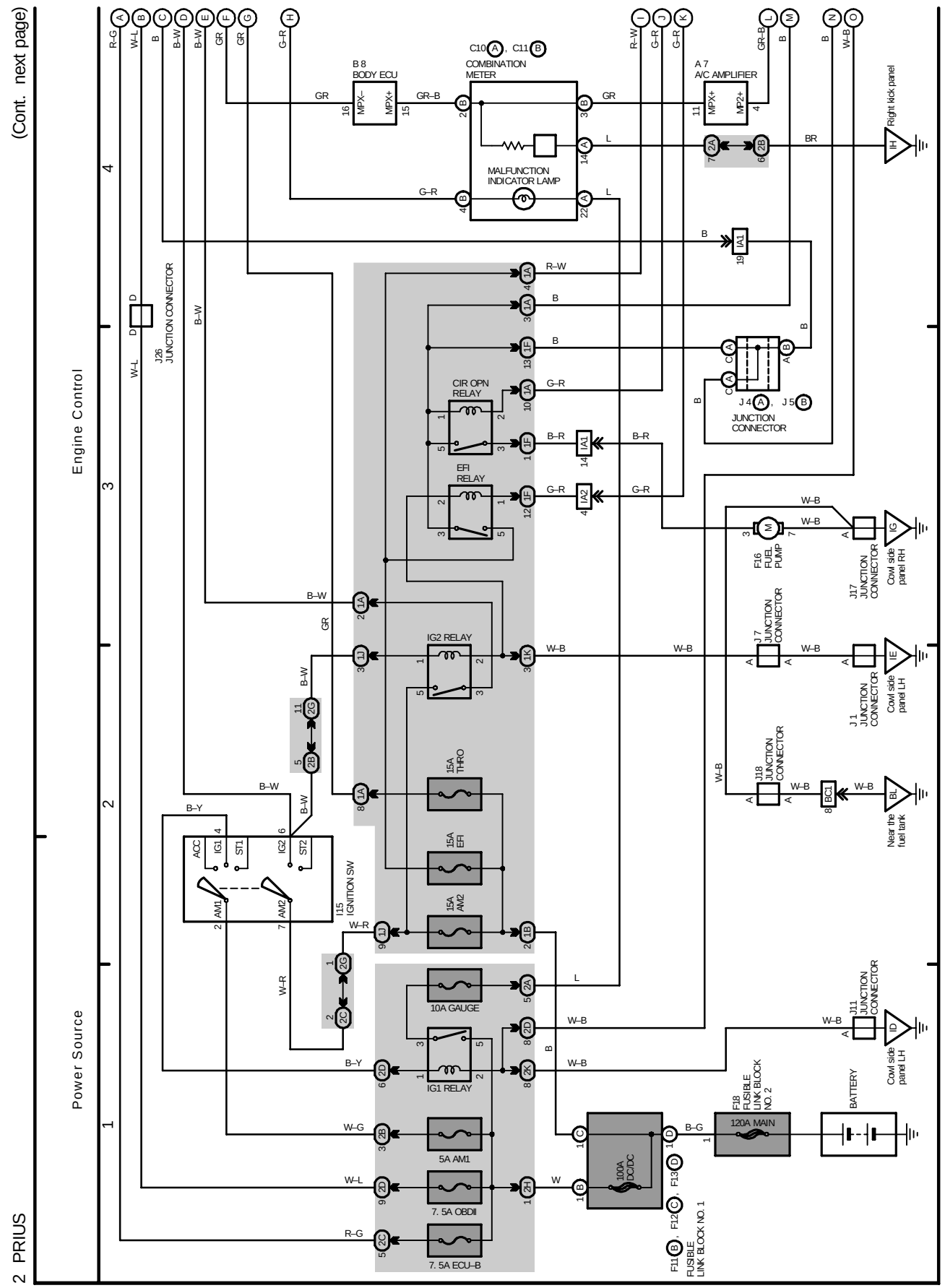

cardiagn.com

(Cont. next page)

Engine Control

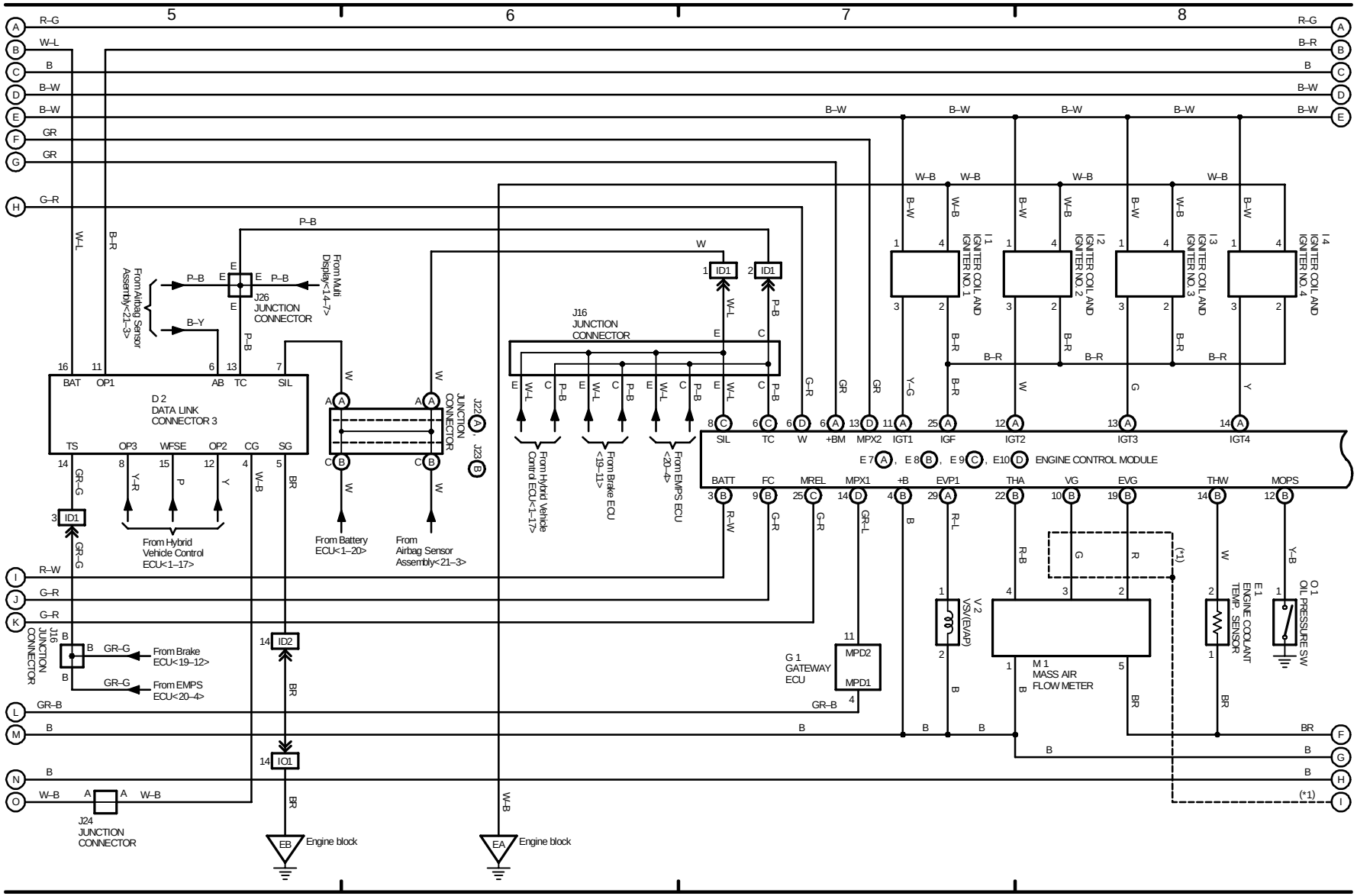

cardiagn.com

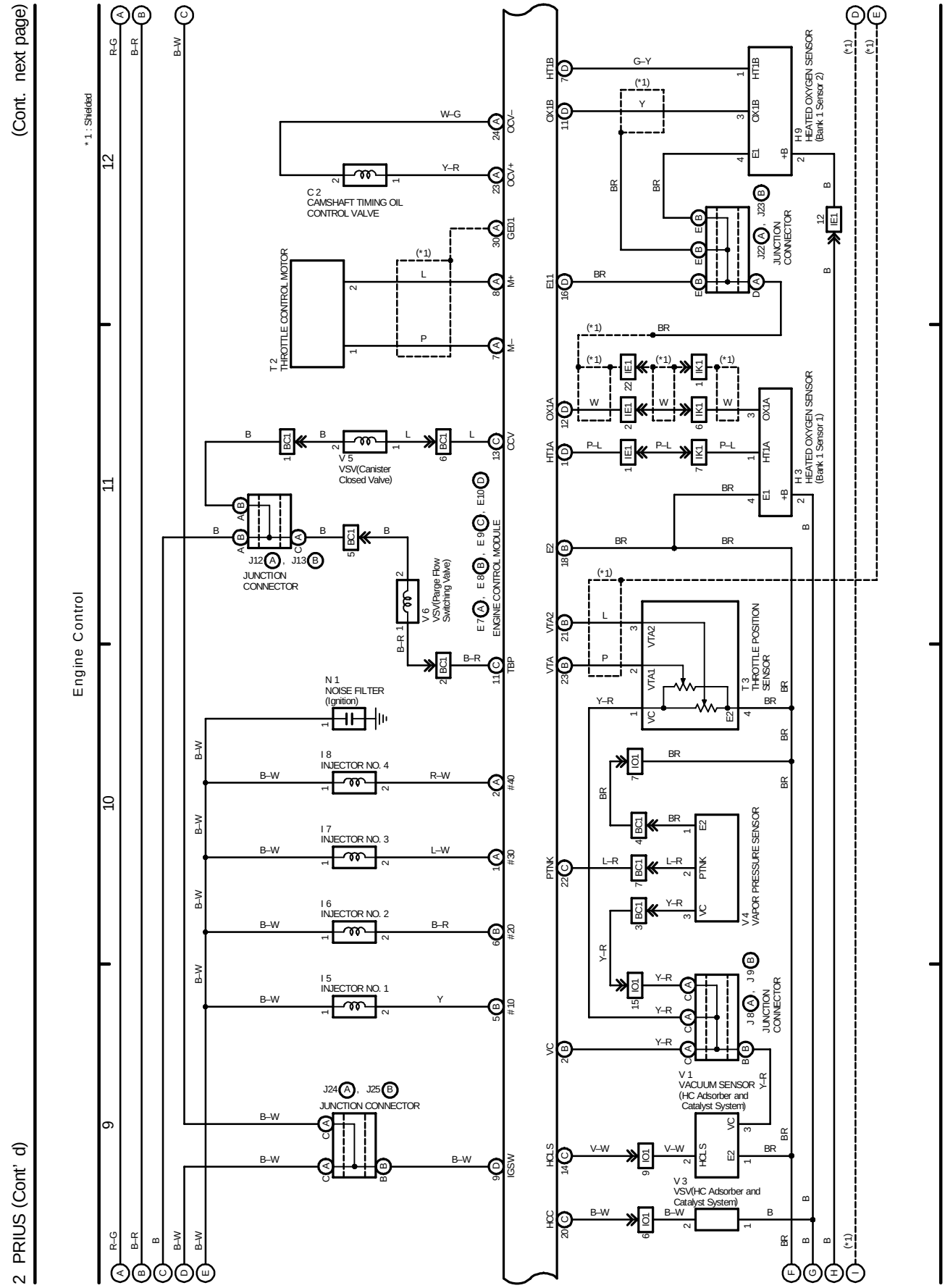

cardiagn.com

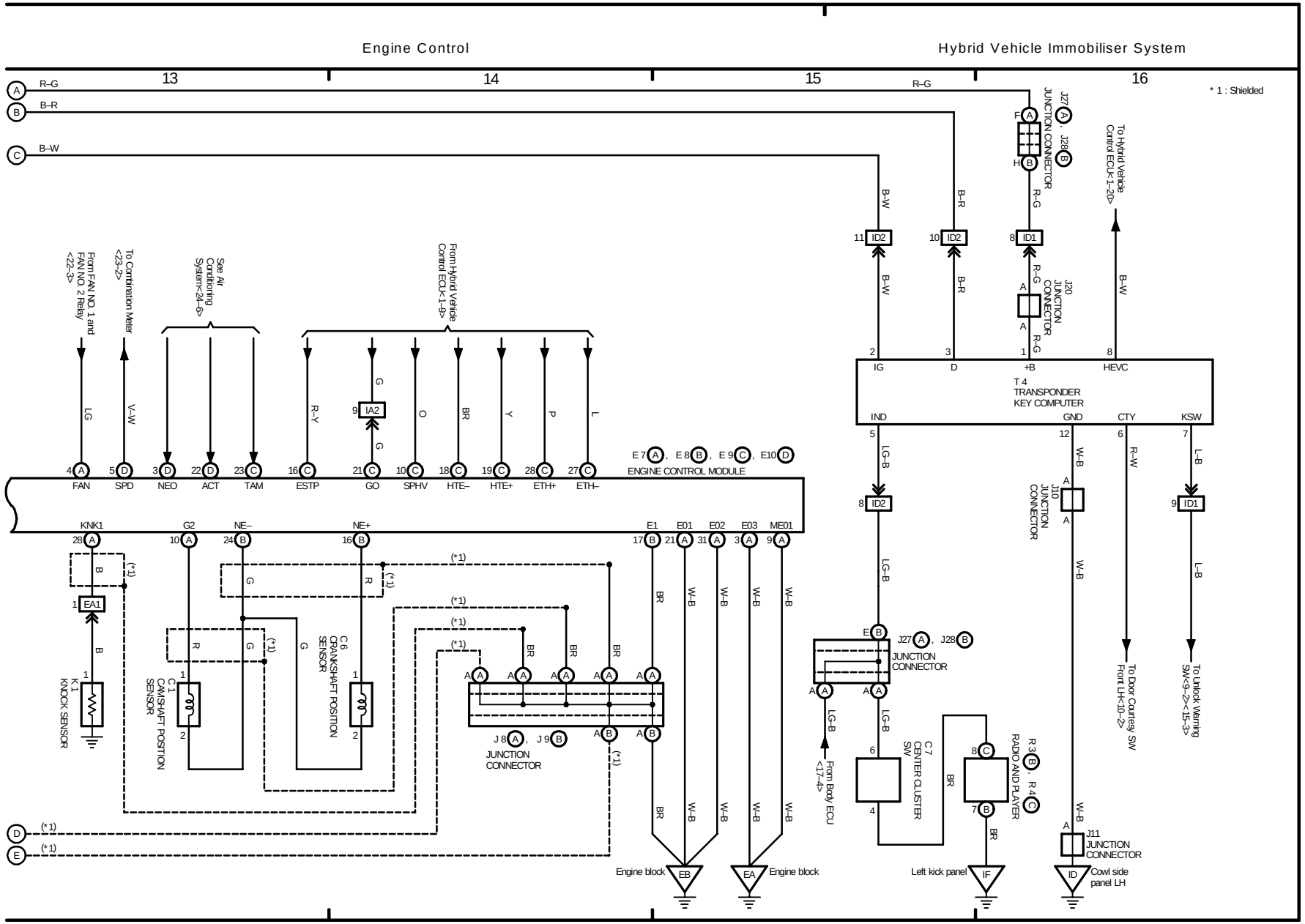

cardiagn.com

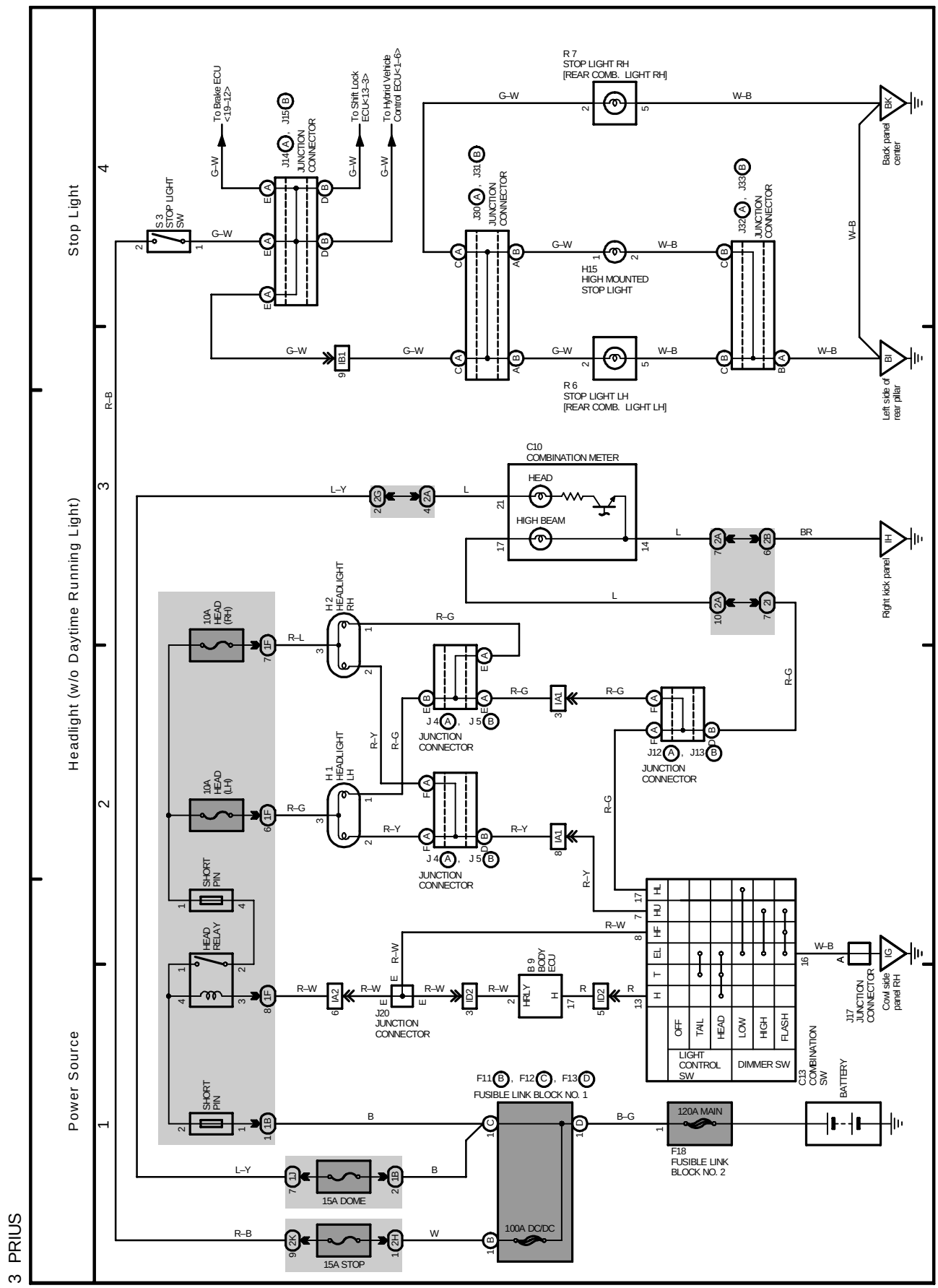

cardiagn.com

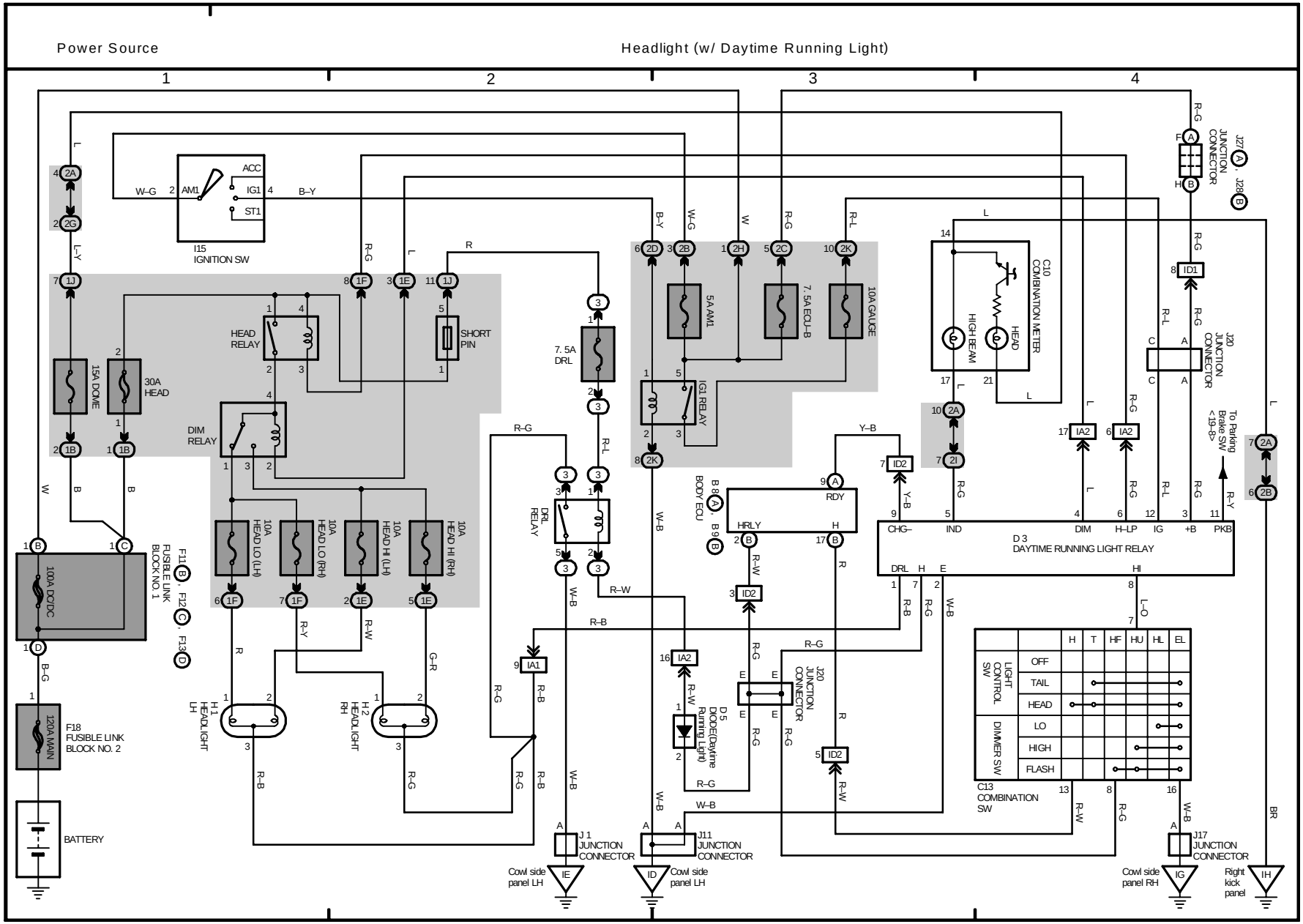

cardiagn.com

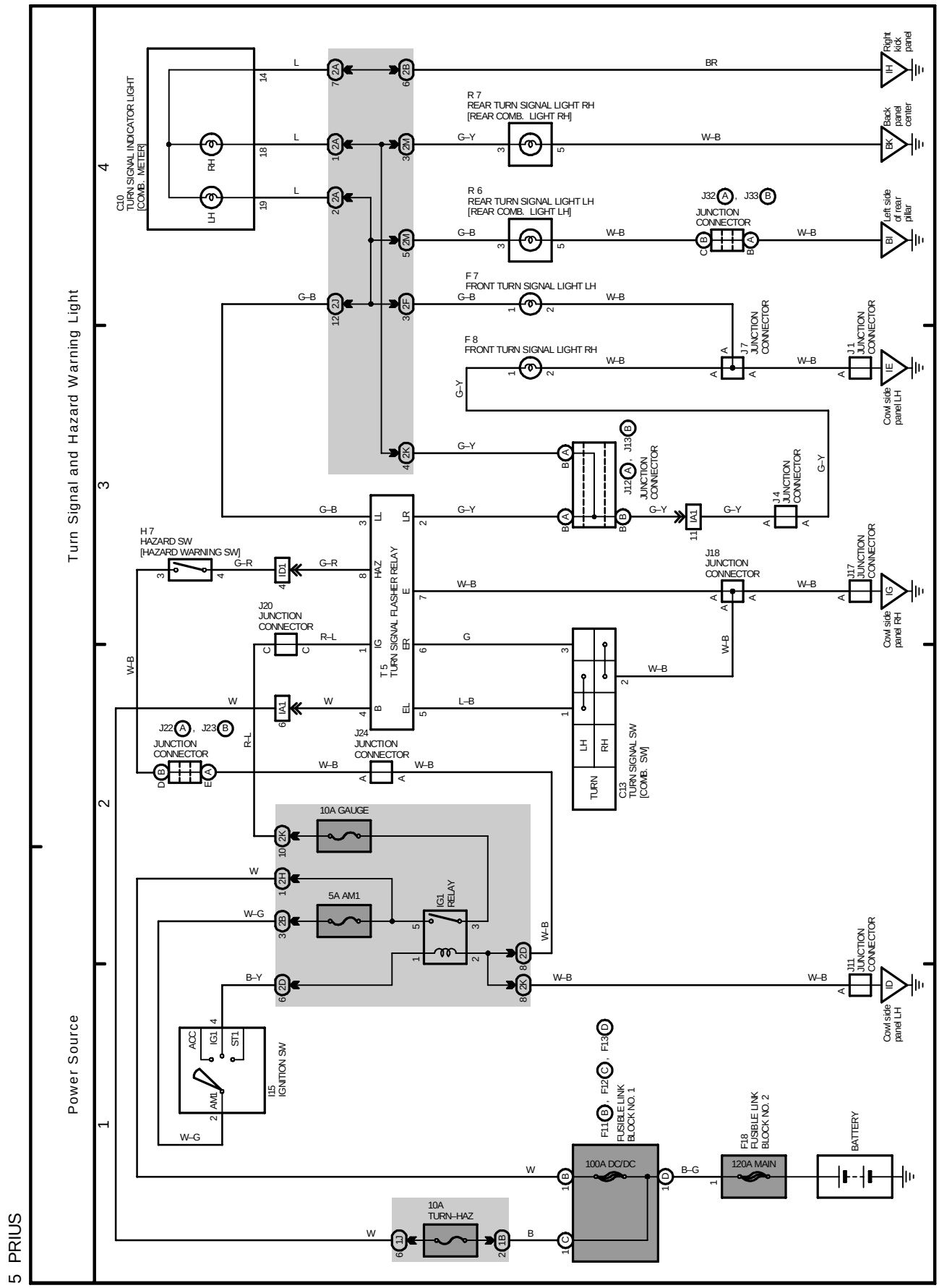

cardiagn.com

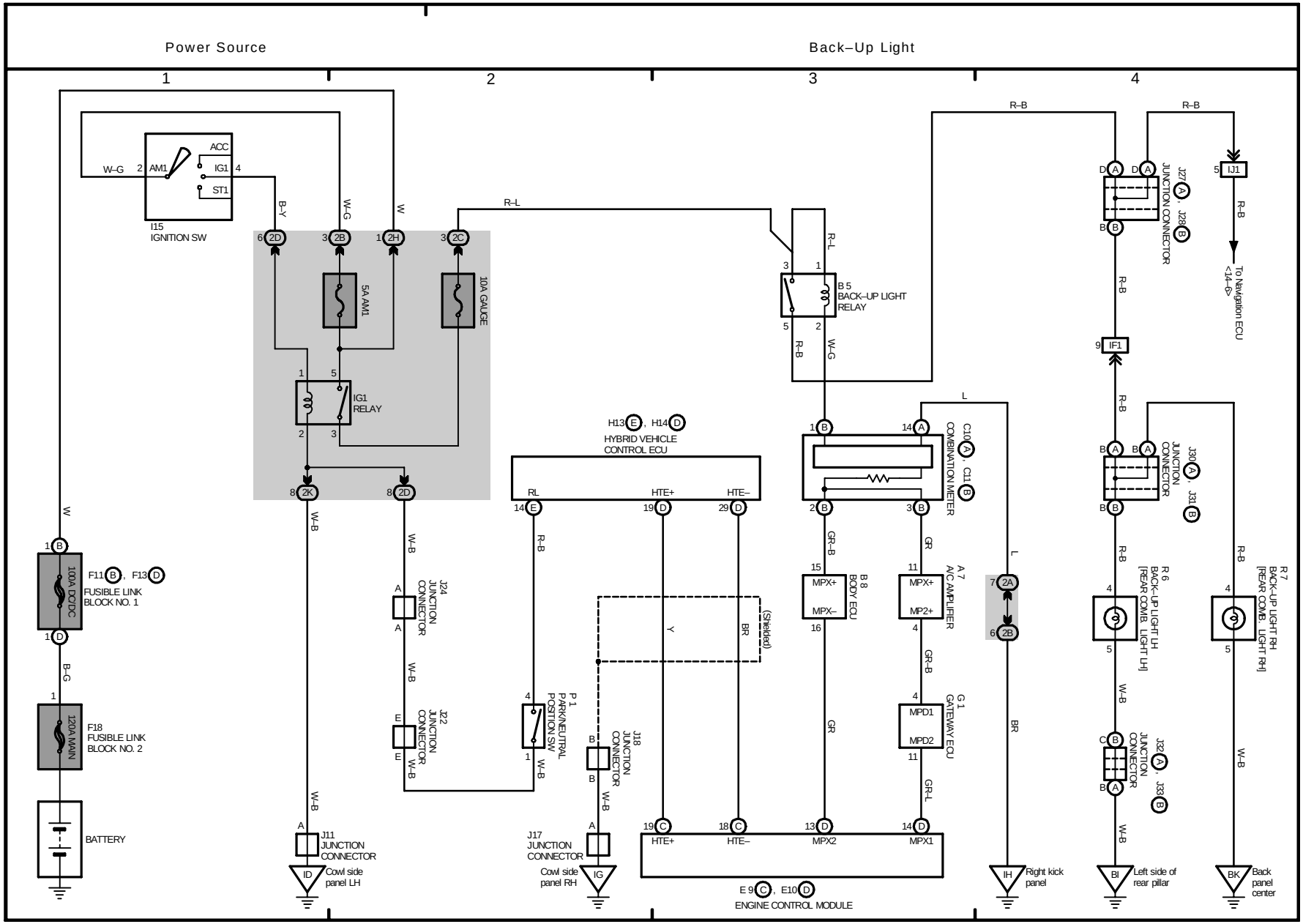

cardiagn.com

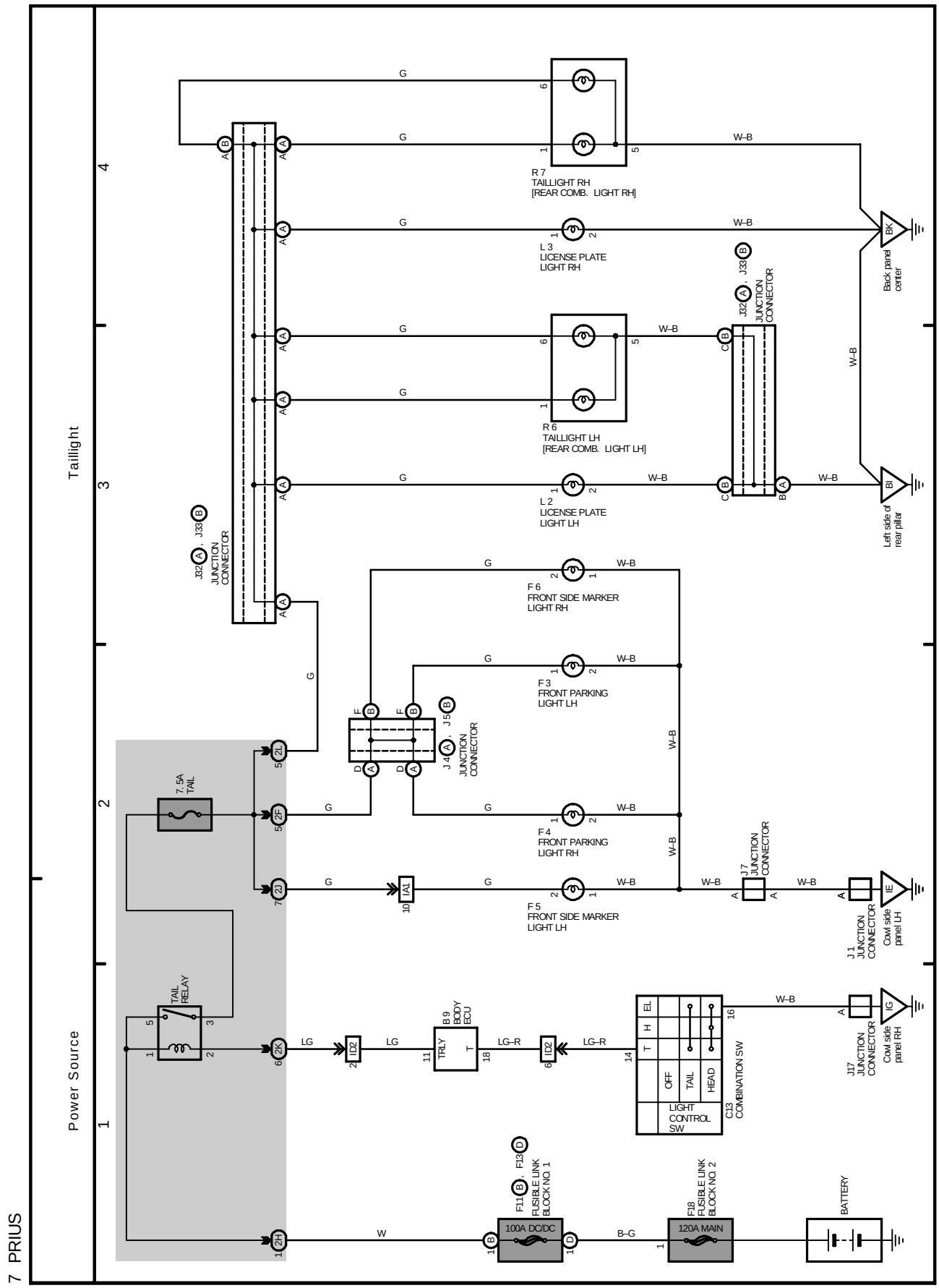

cardiagn.com

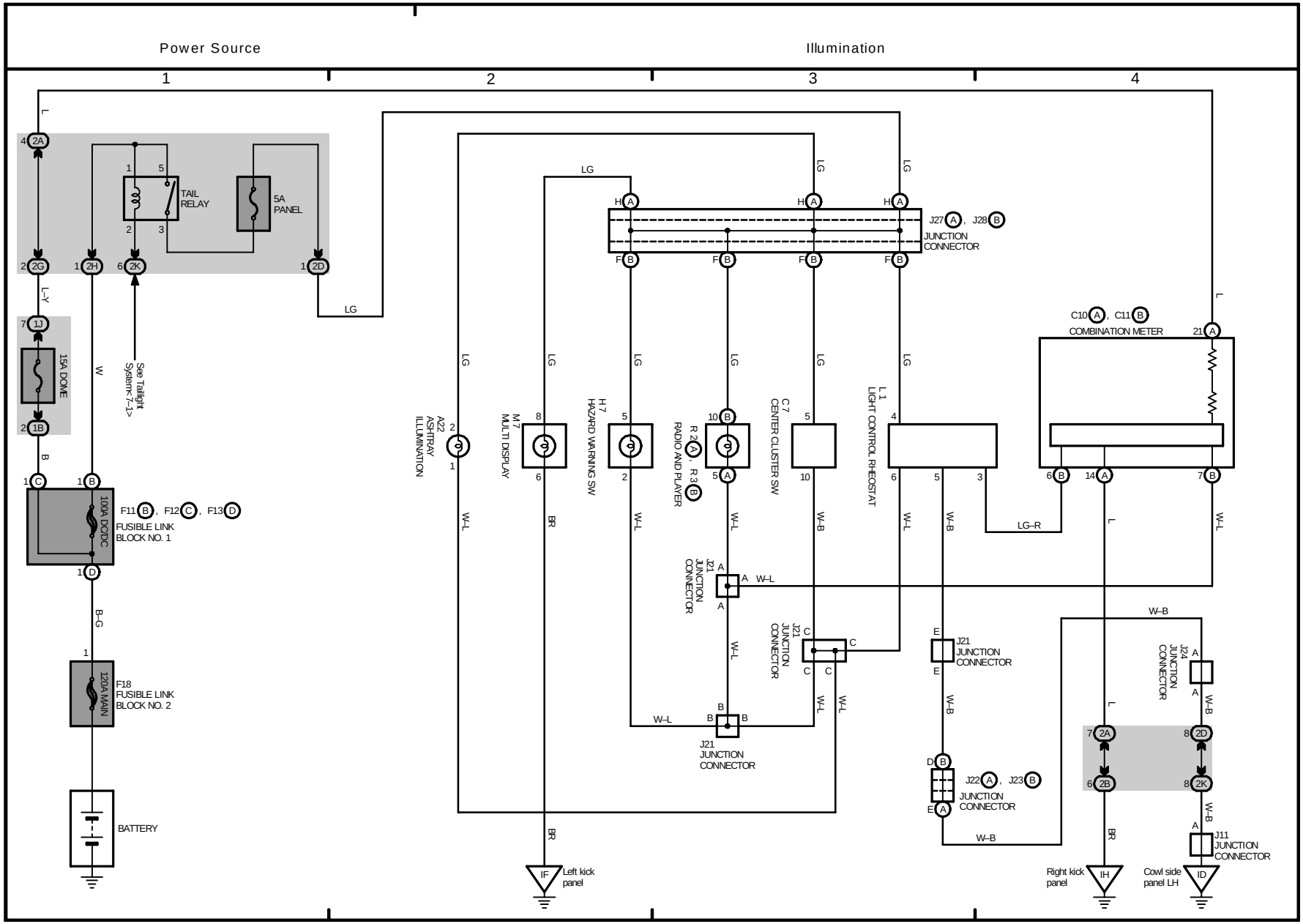

cardiagn.com

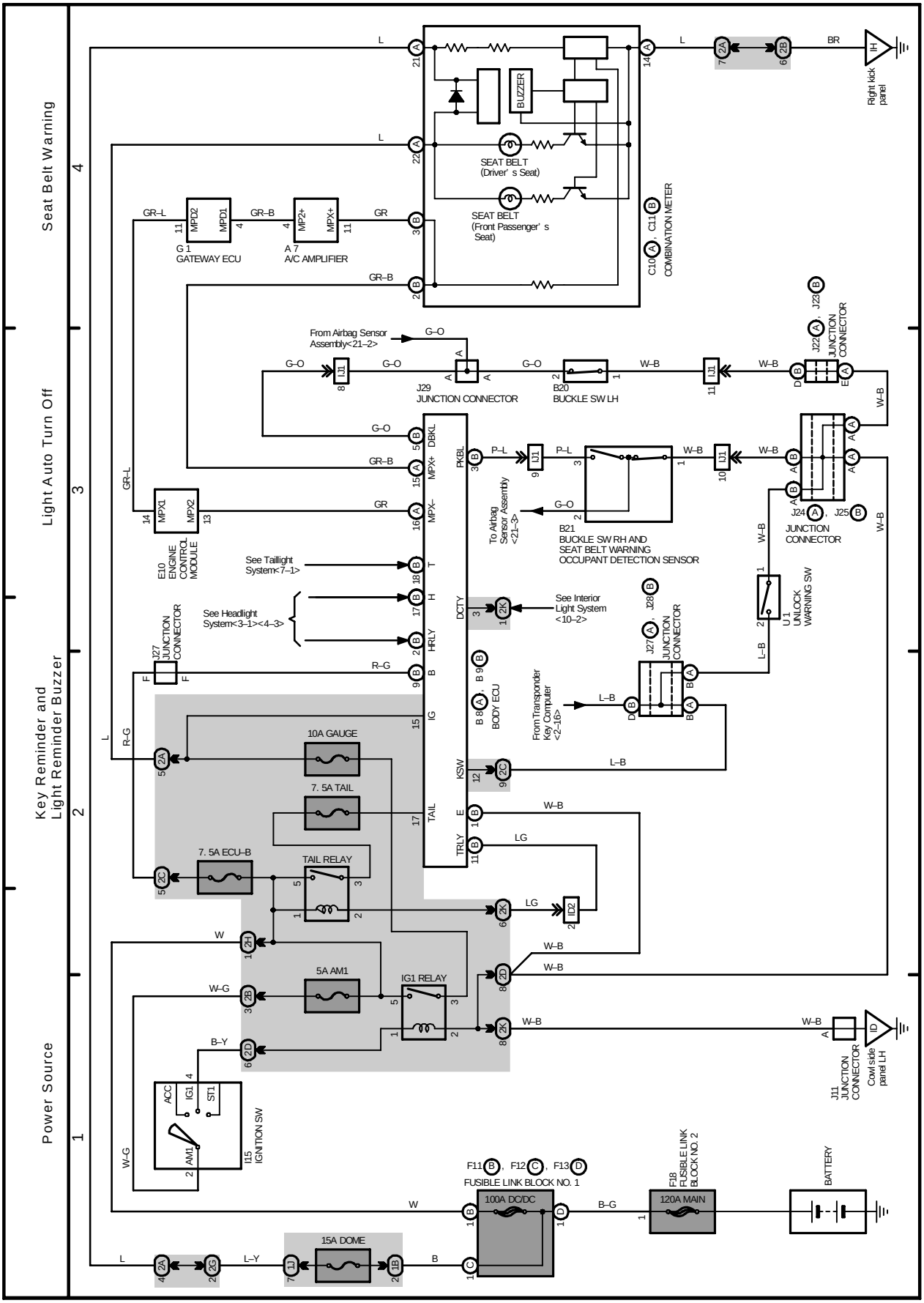

cardiagn.com

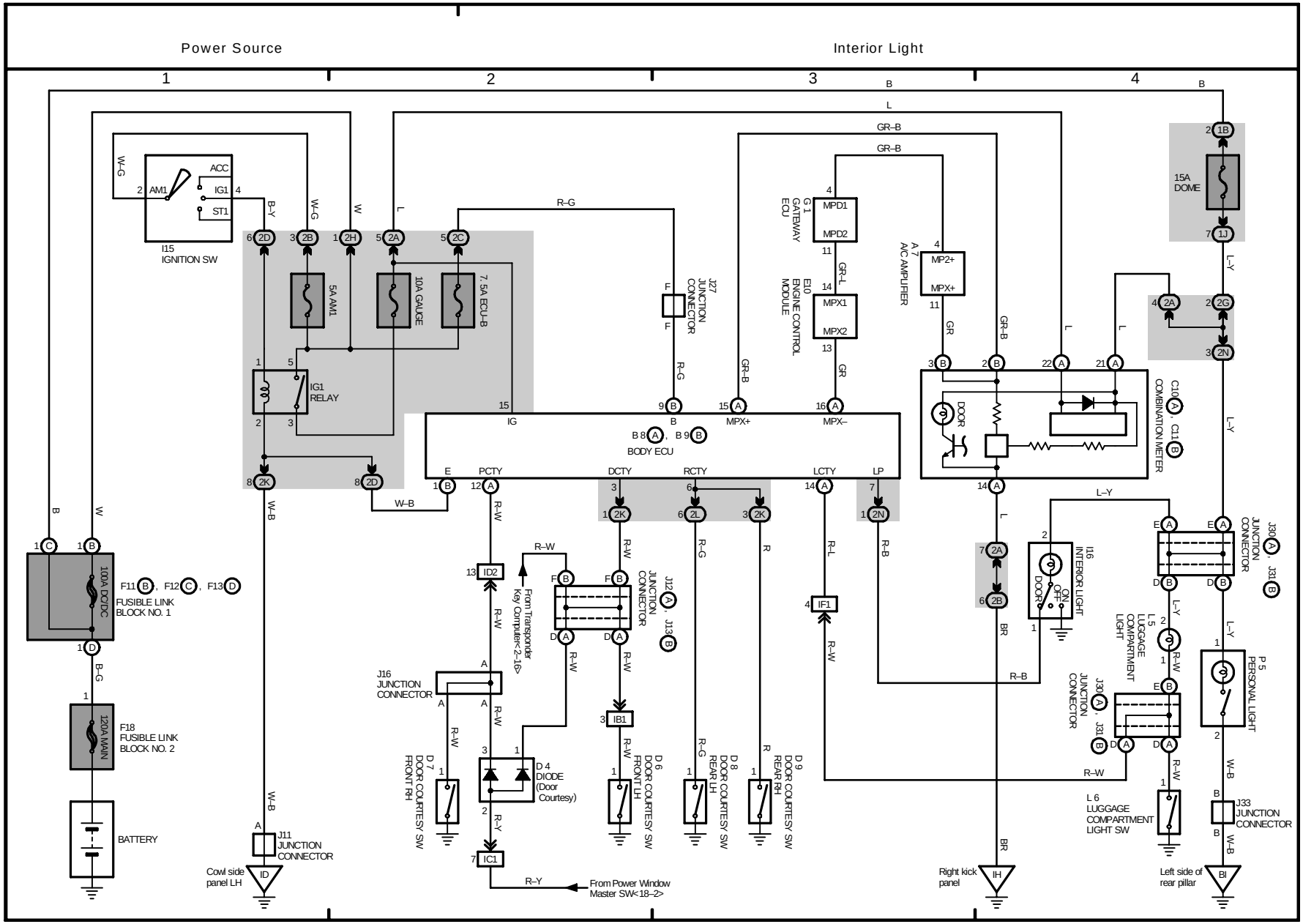

cardiagn.com

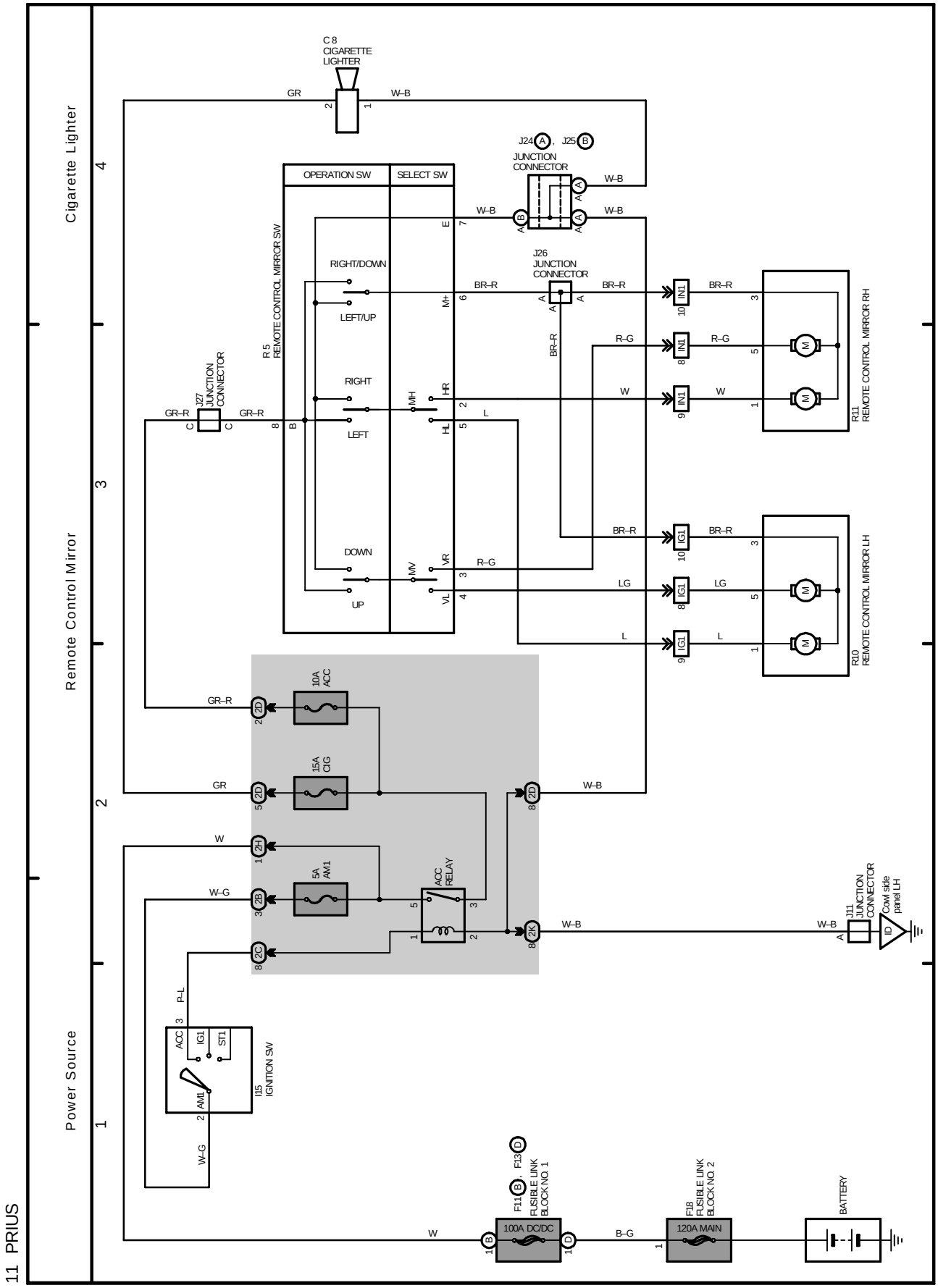

cardiagn.com

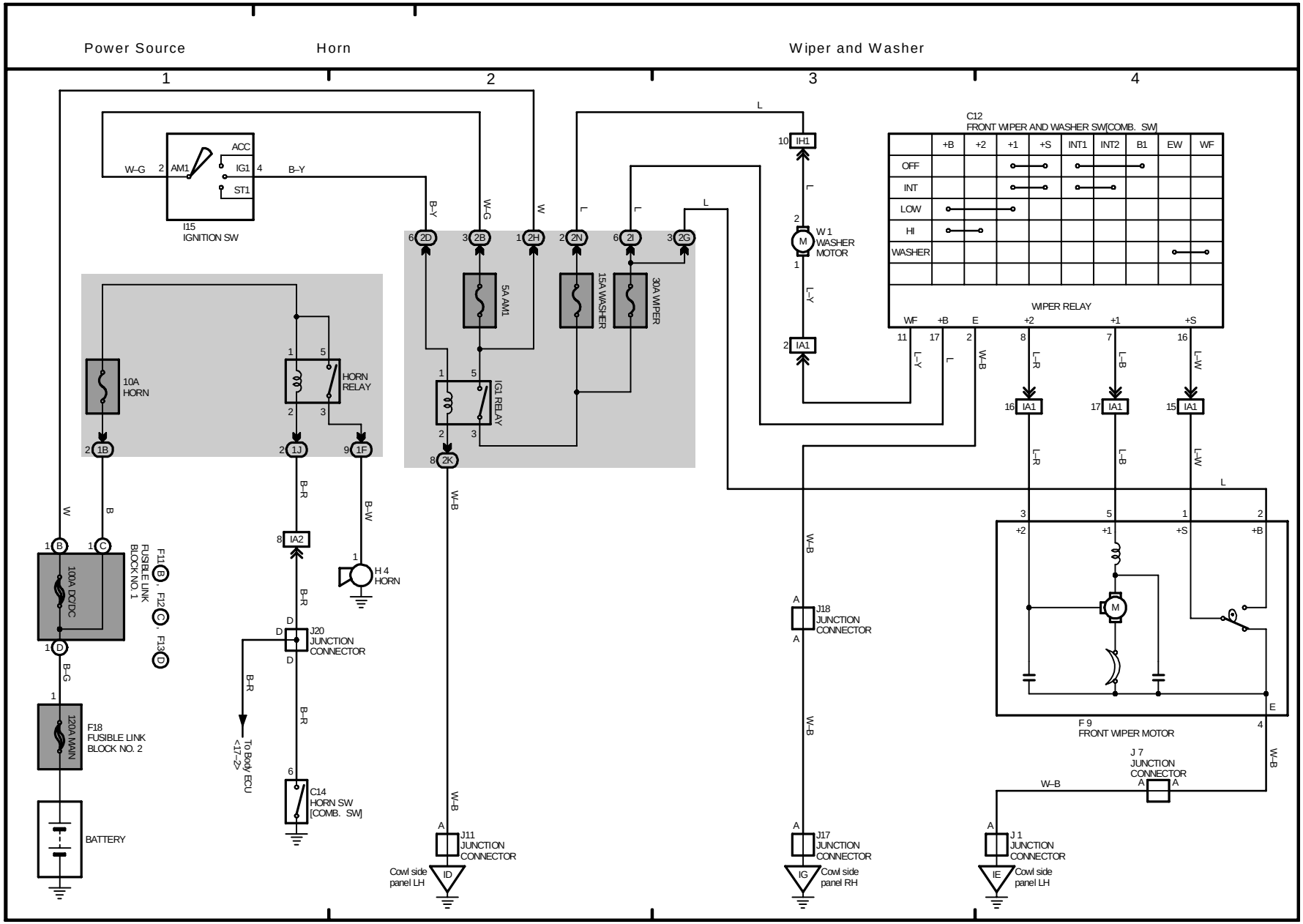

cardiagn.com

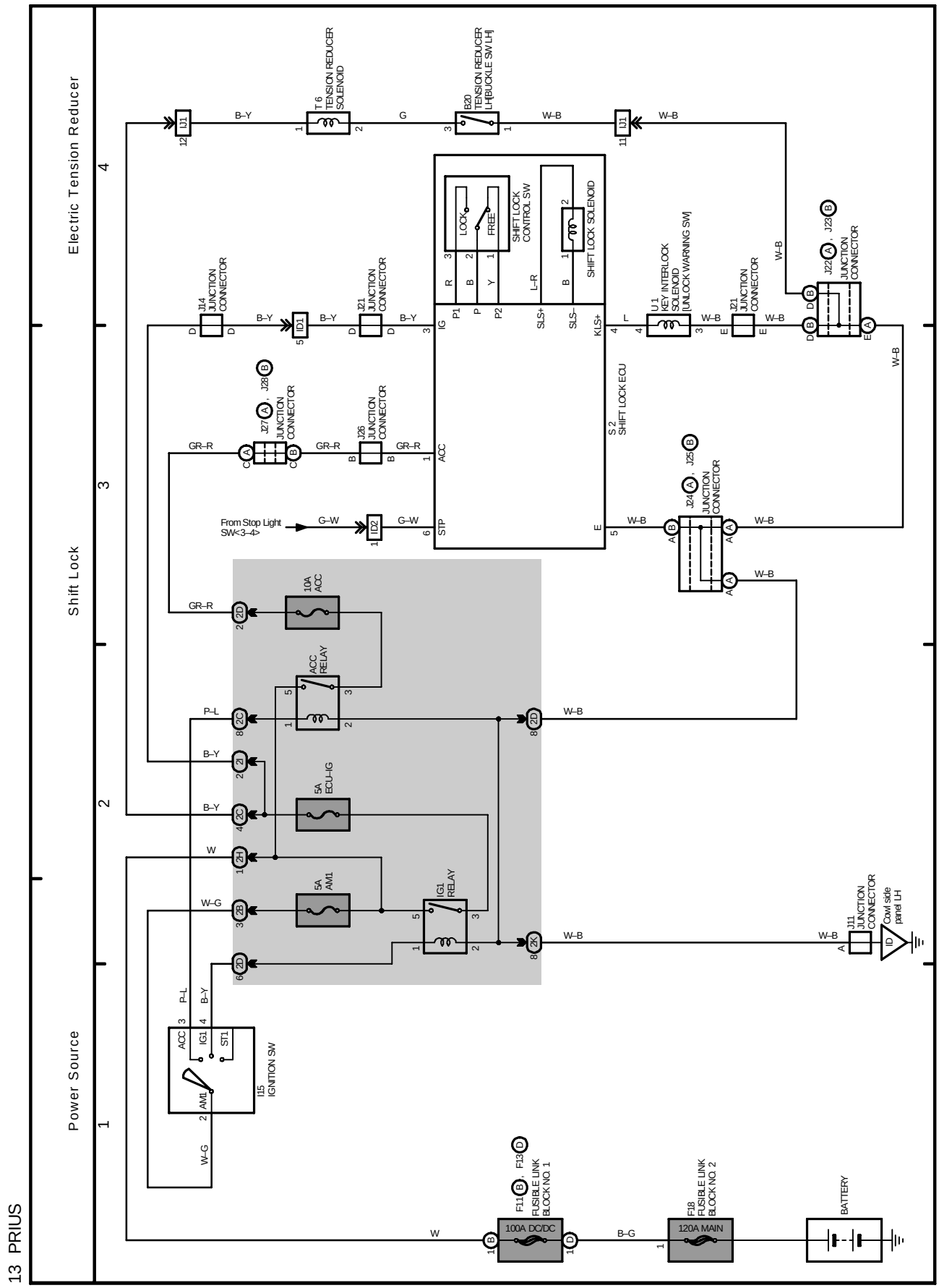

cardiagn.com

cardiagn.com

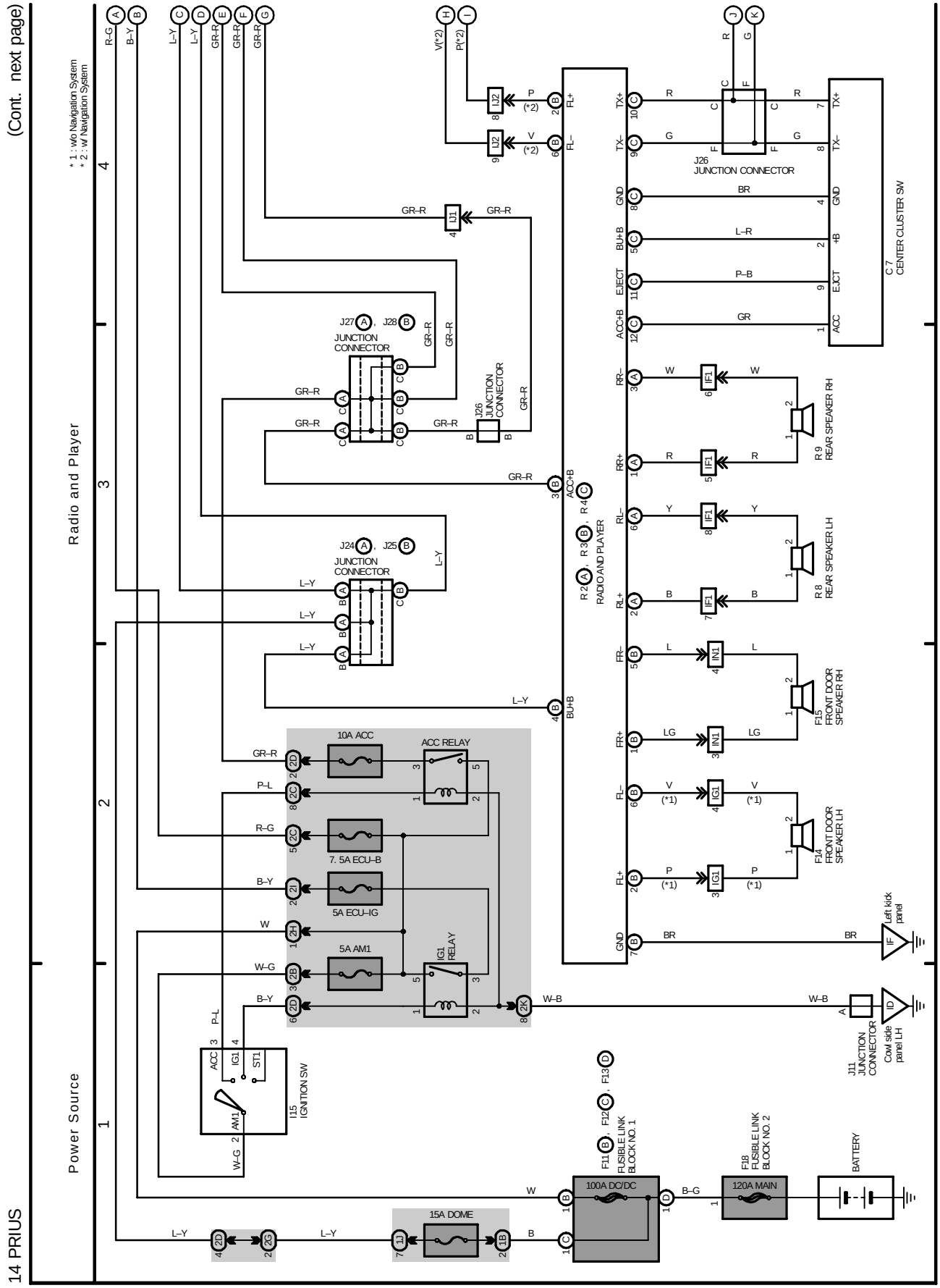

cardiagn.com

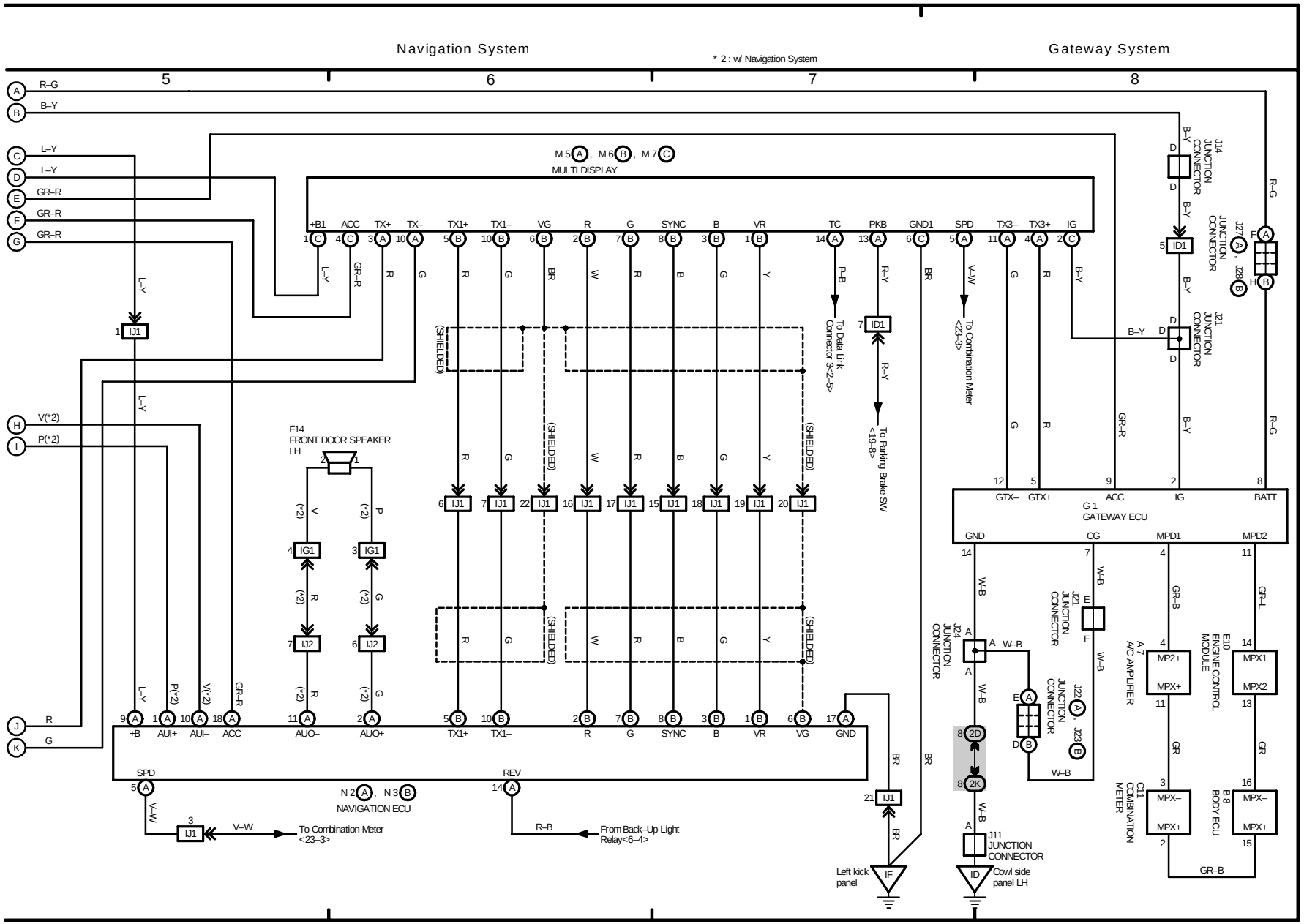

cardiagn.com

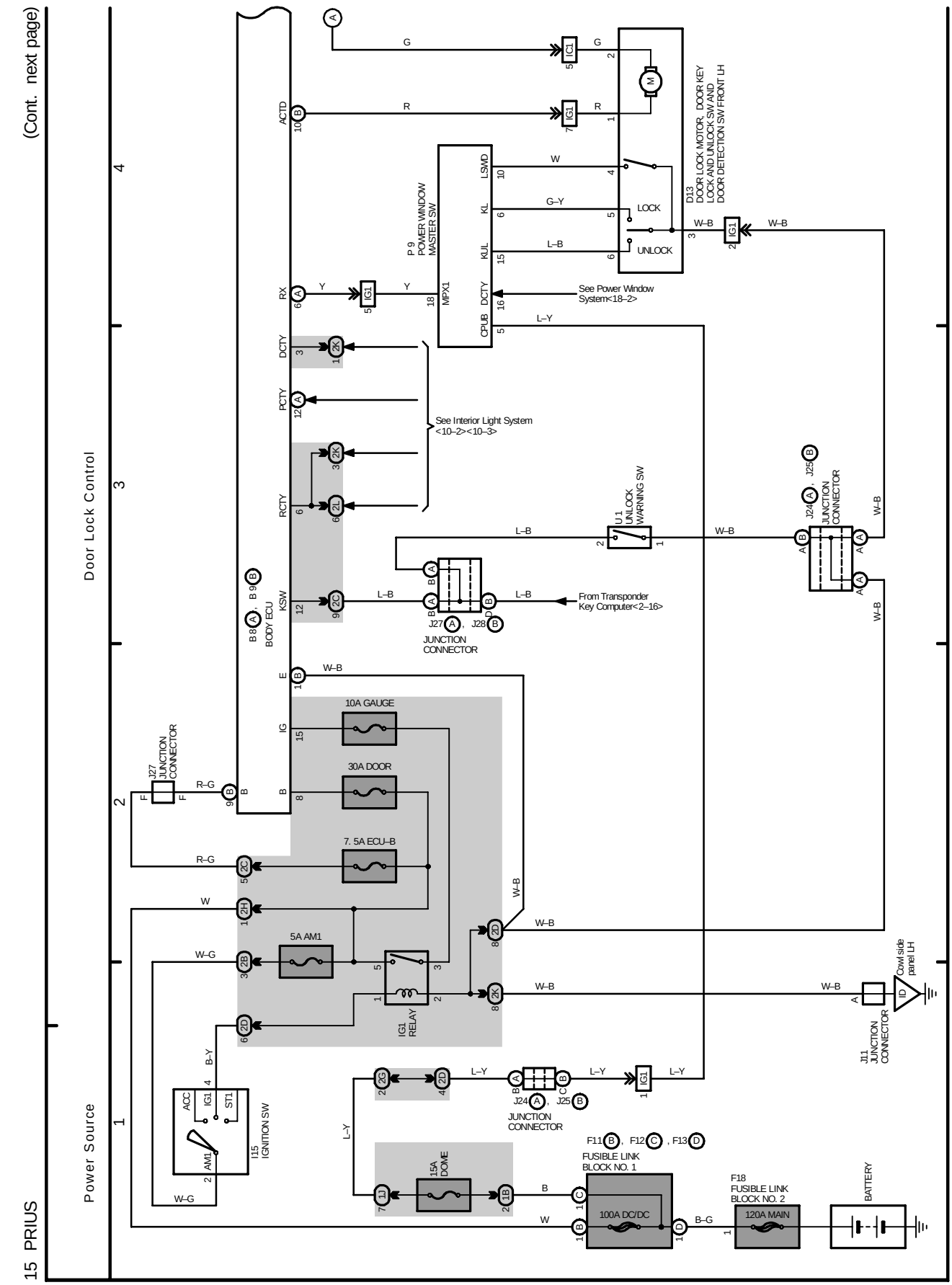

cardiagn.com

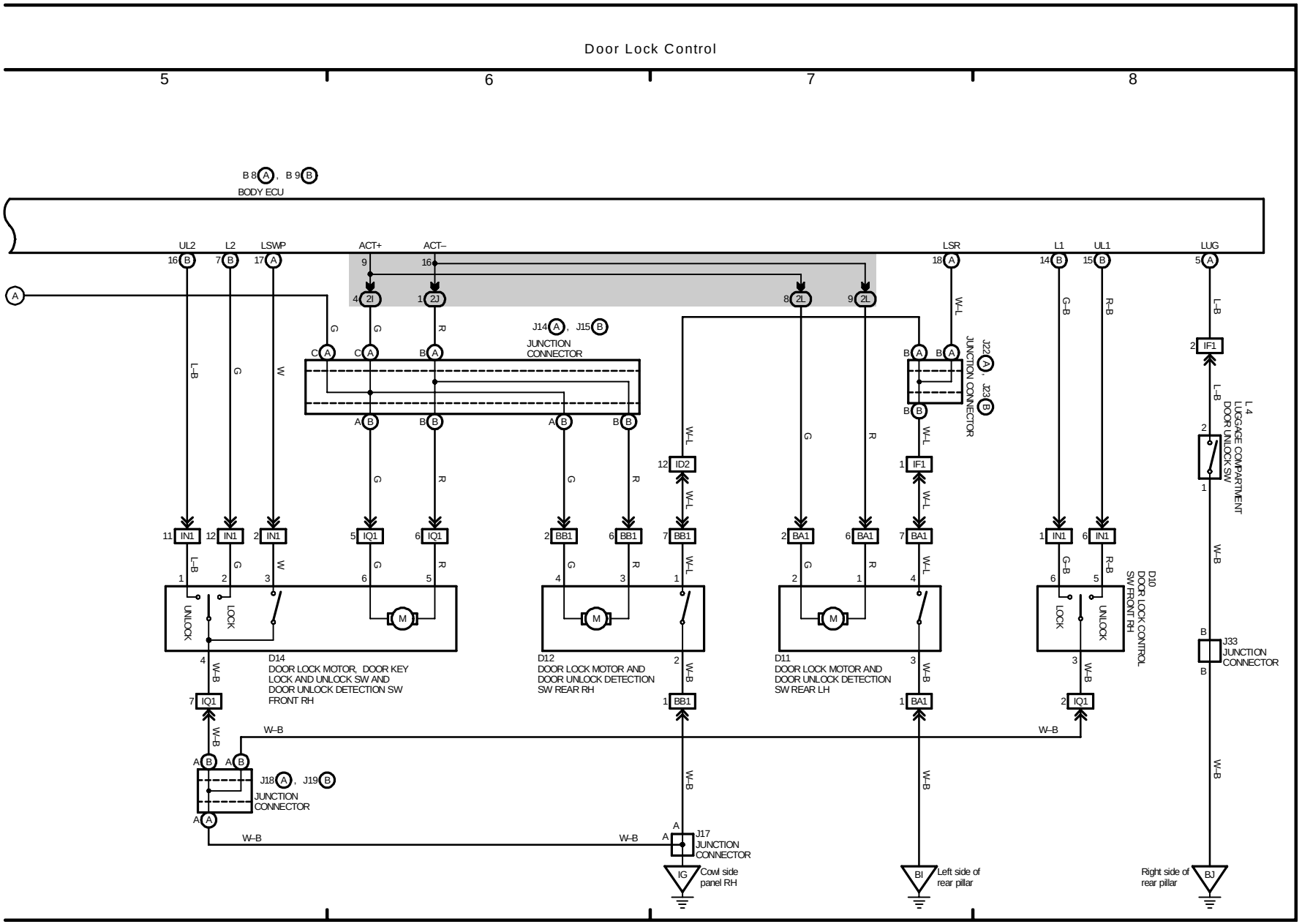

cardiagn.com

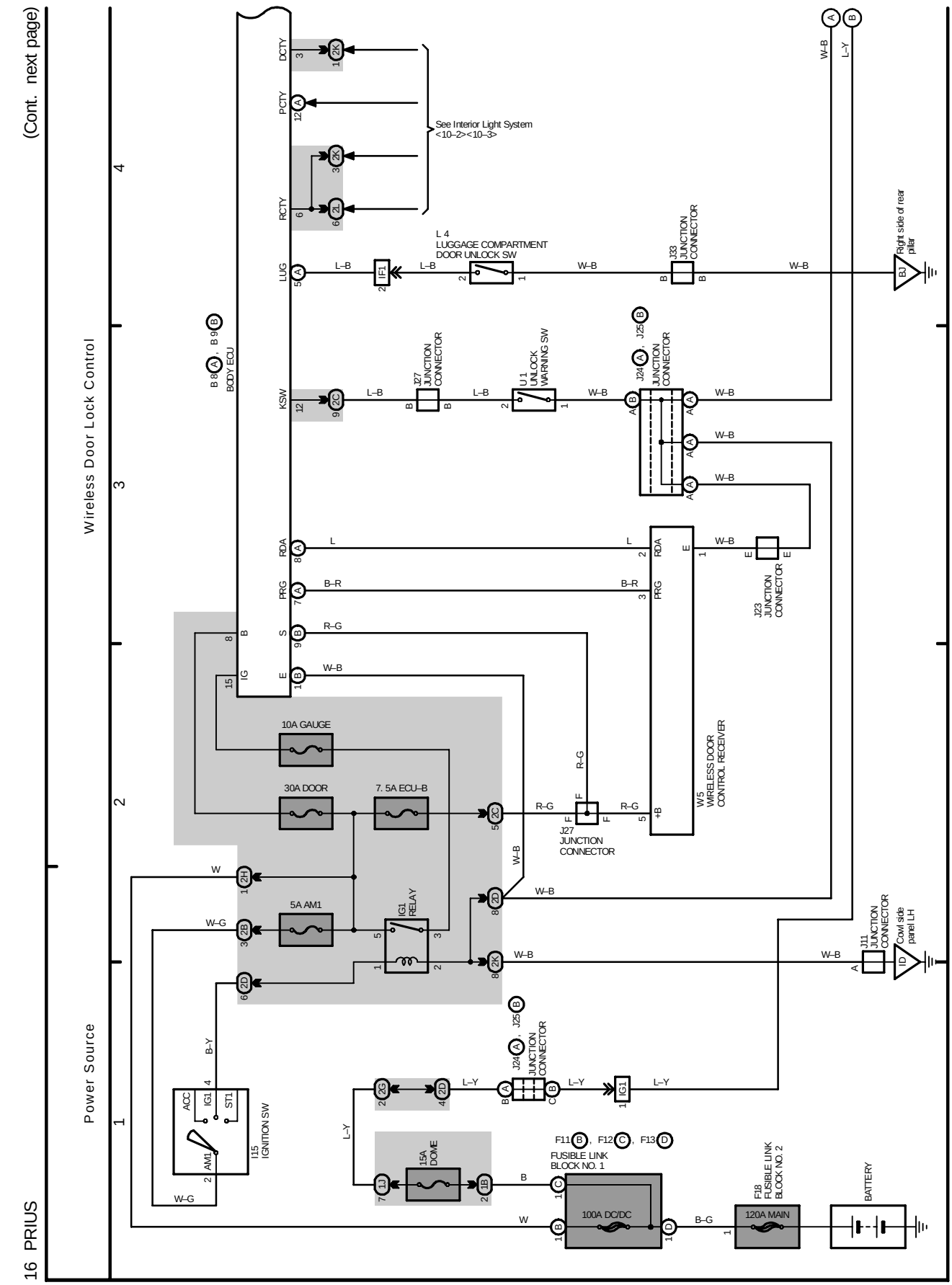

cardiagn.com

Wireless Door Lock Control

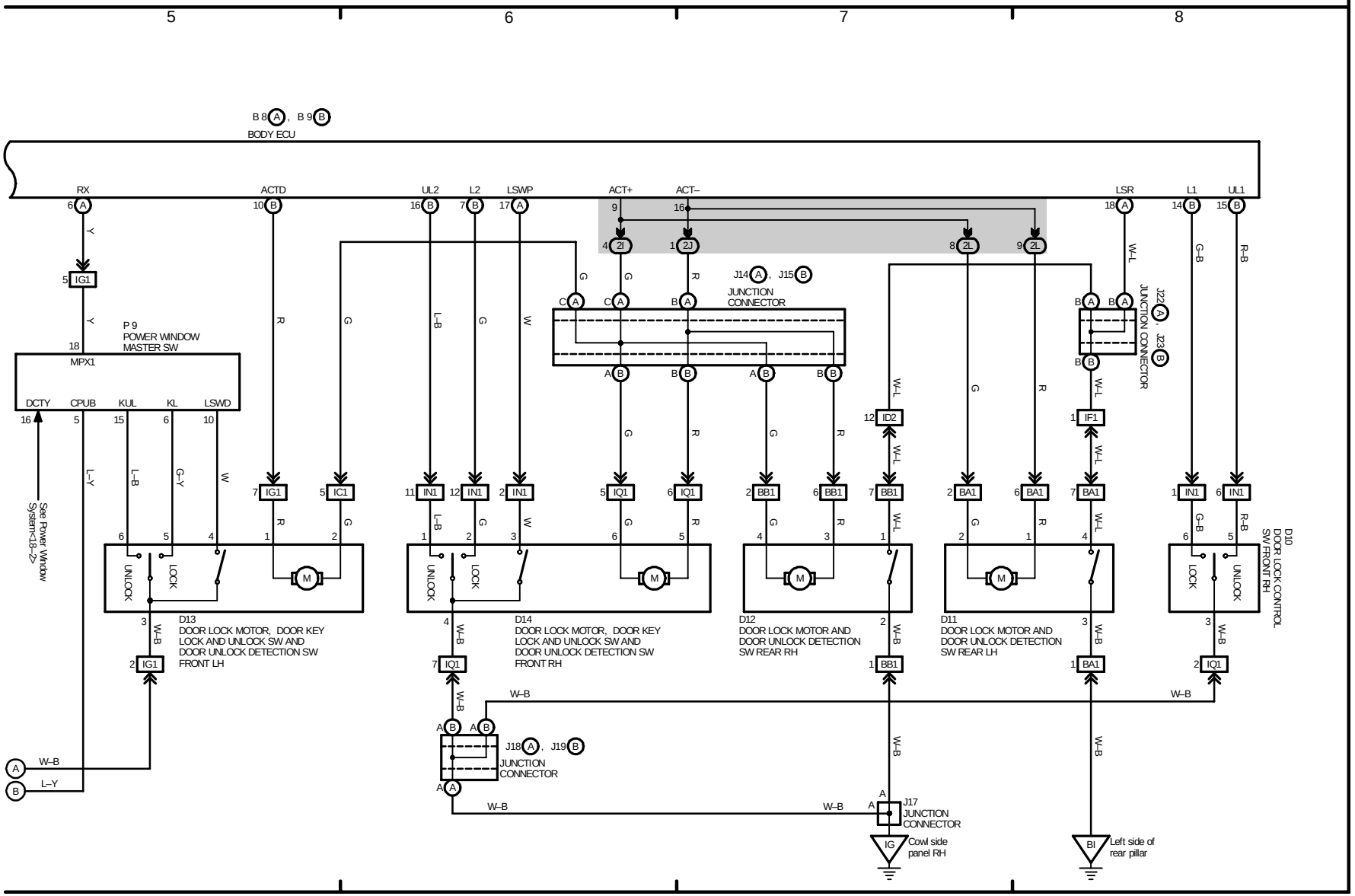

cardiagn.com

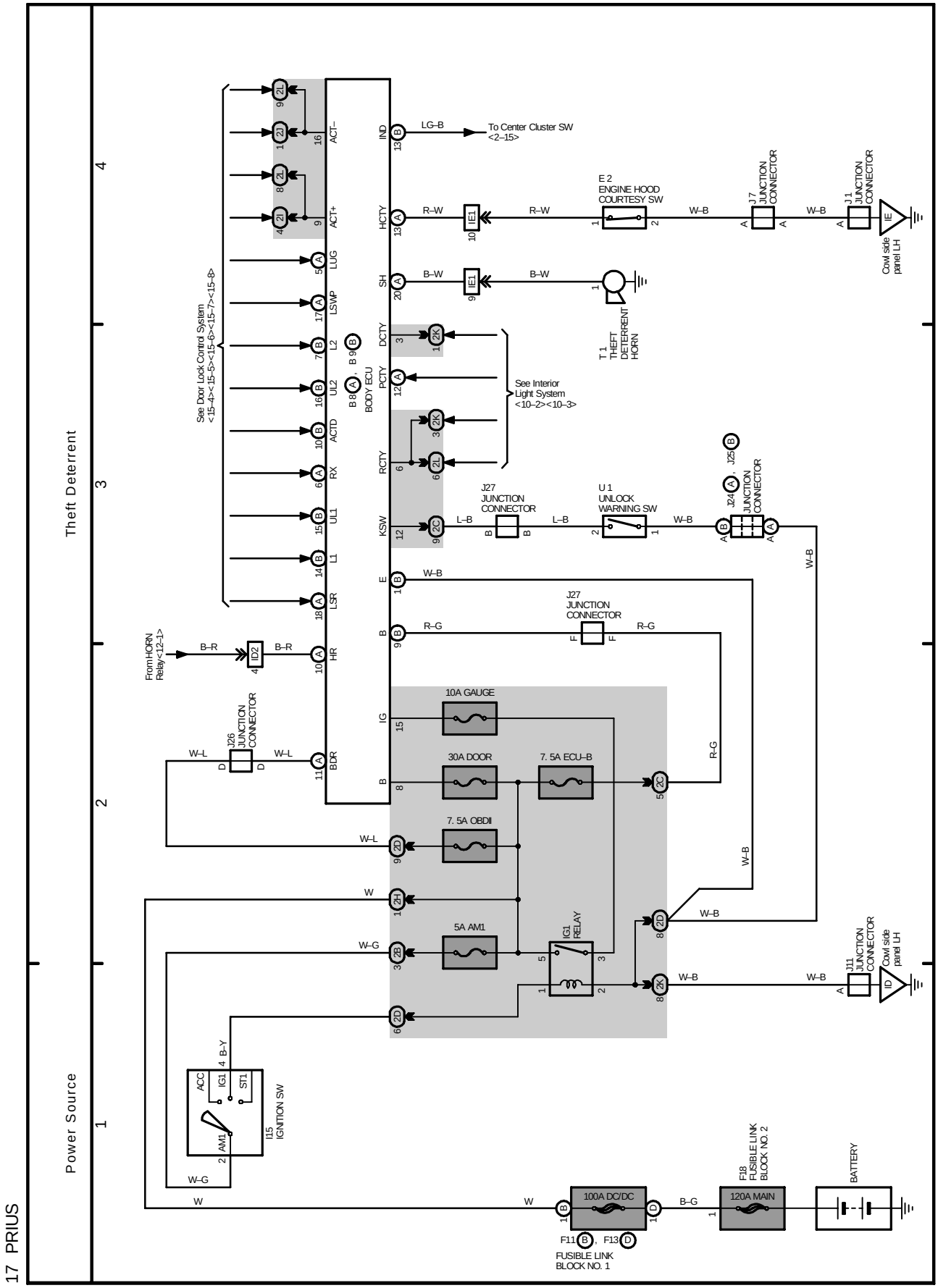

cardiagn.com

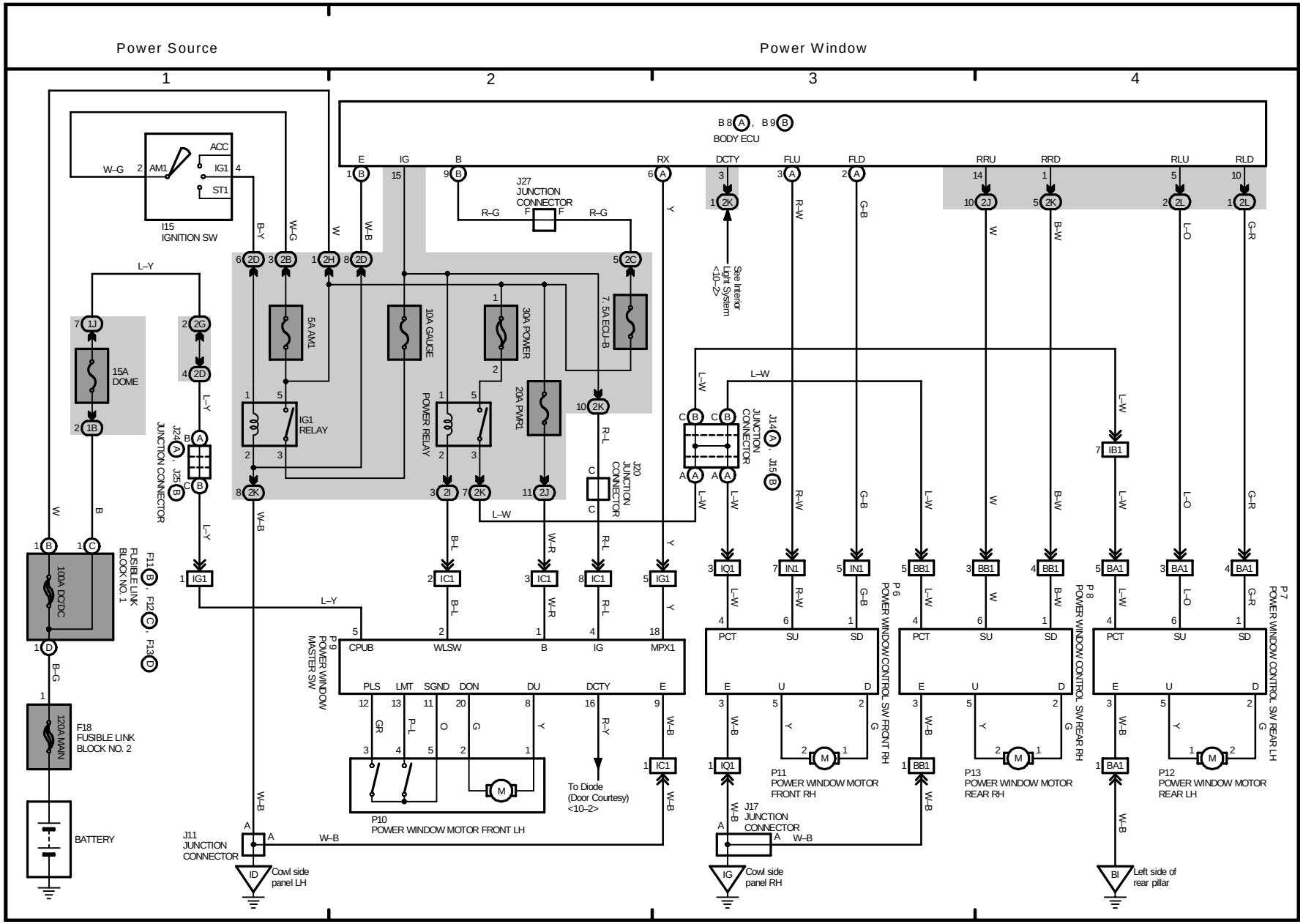

cardiagn.com

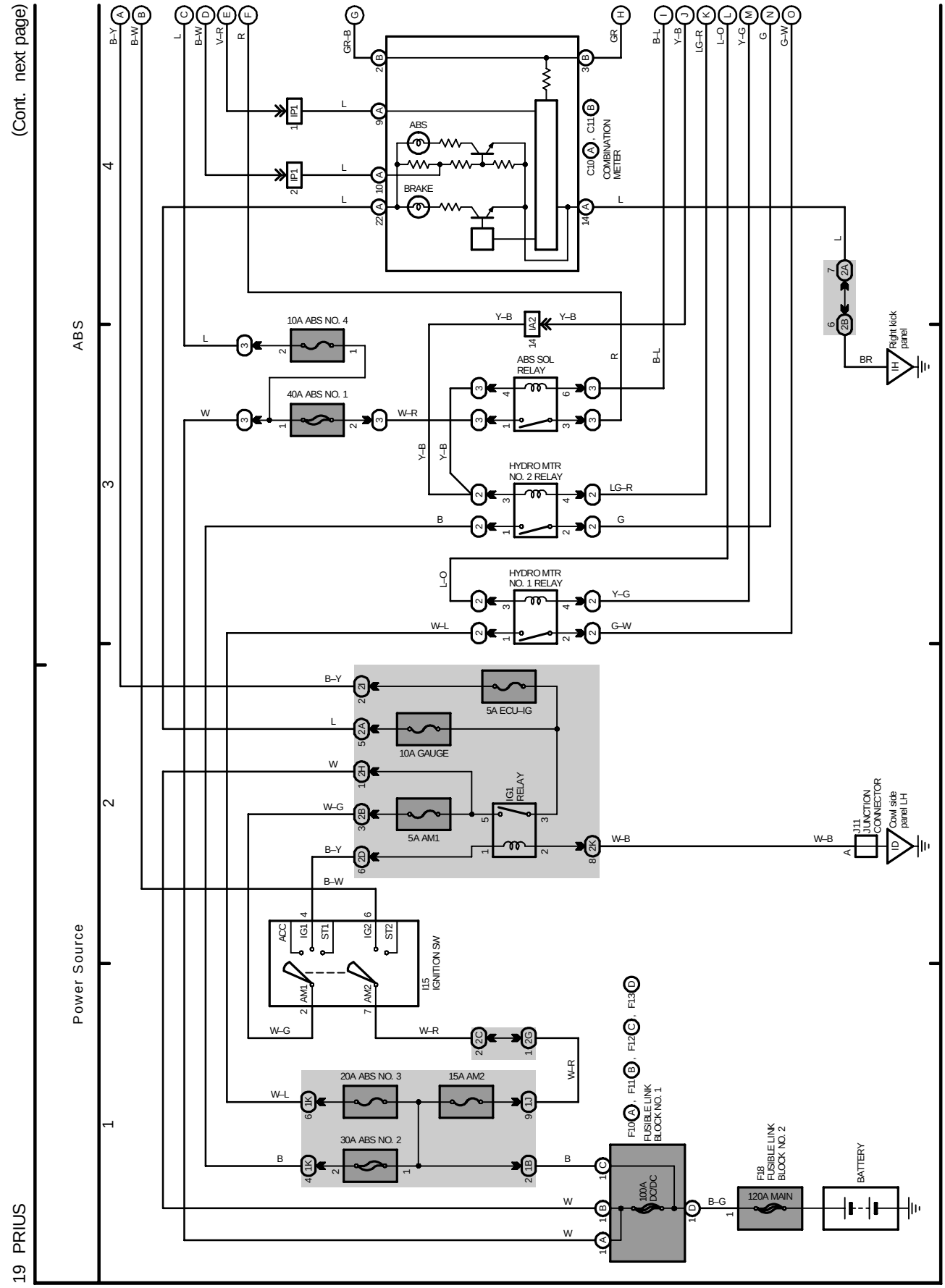

cardiagn.com

(Cont. next page)

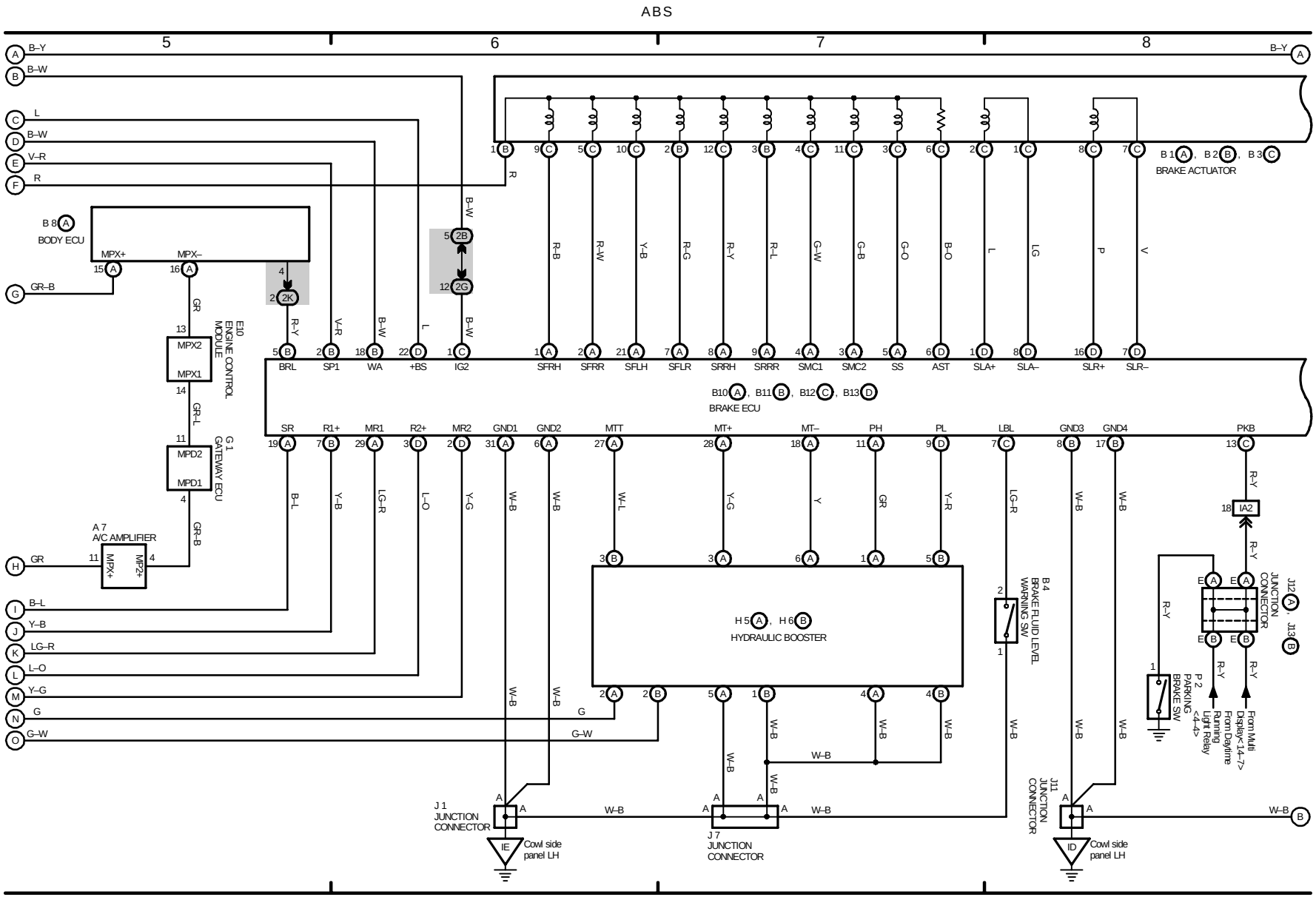

cardiagn.com

M

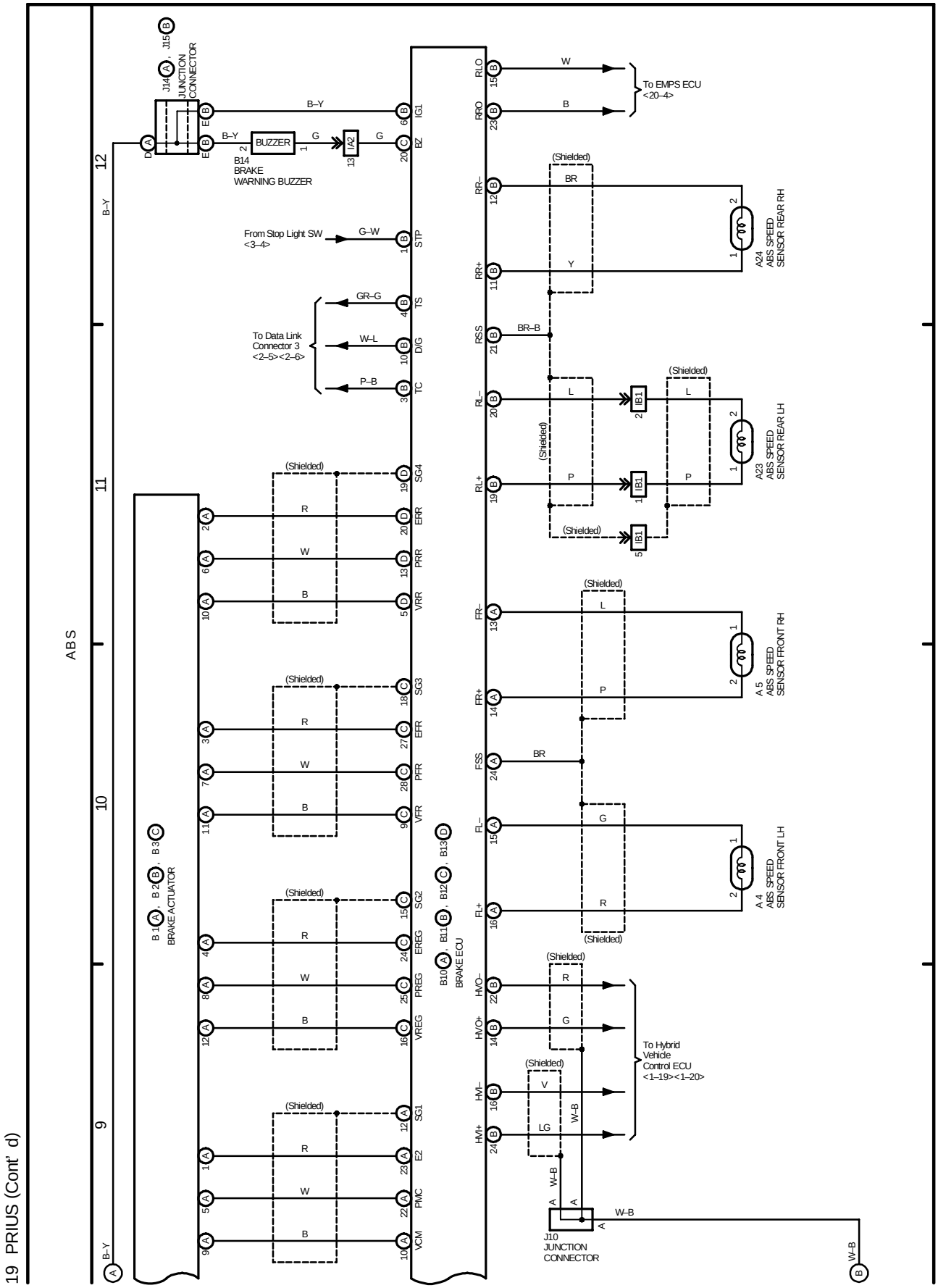

cardiagn.com

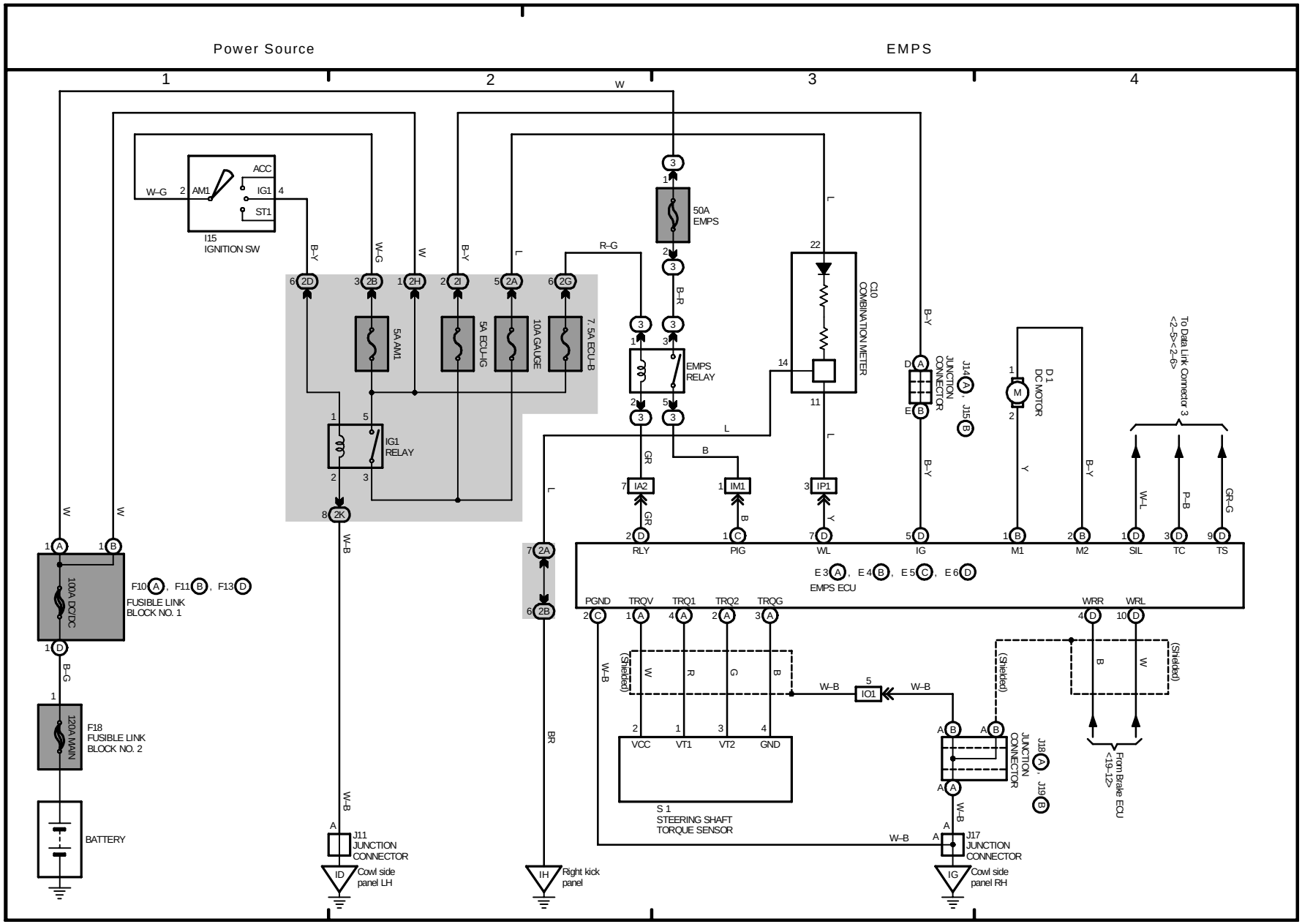

cardiagn.com

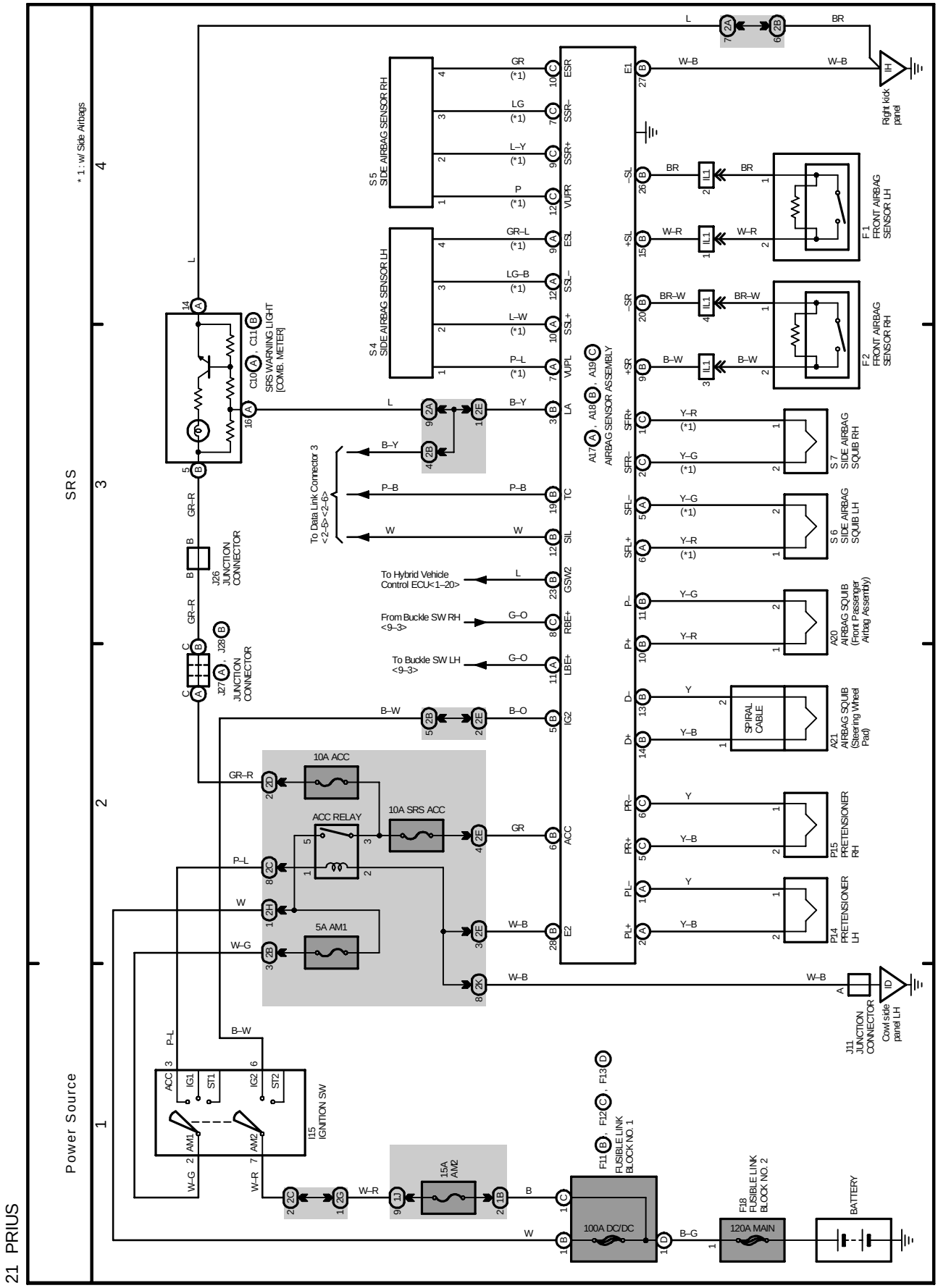

cardiagn.com

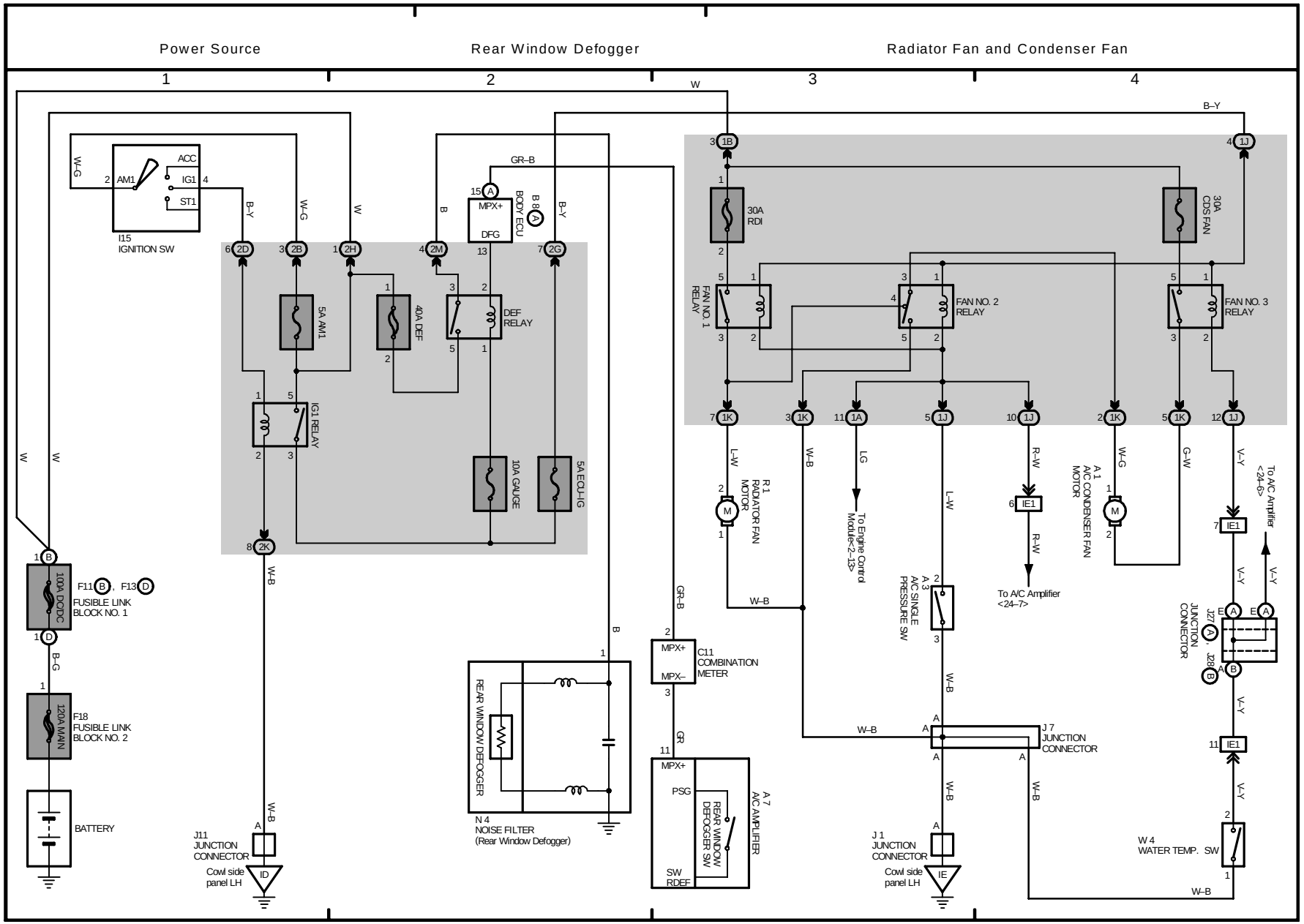

cardiagn.com

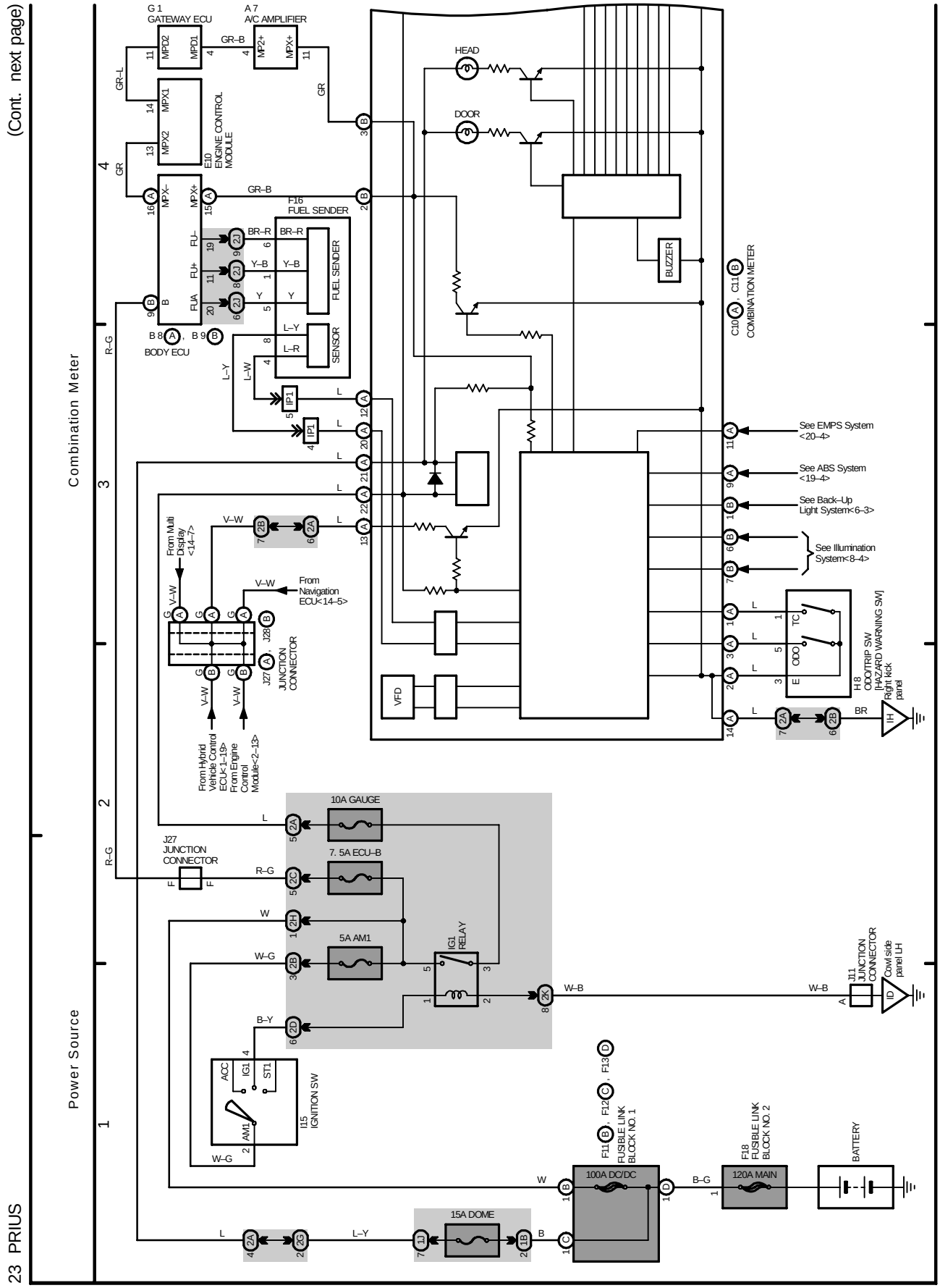

cardiagn.com

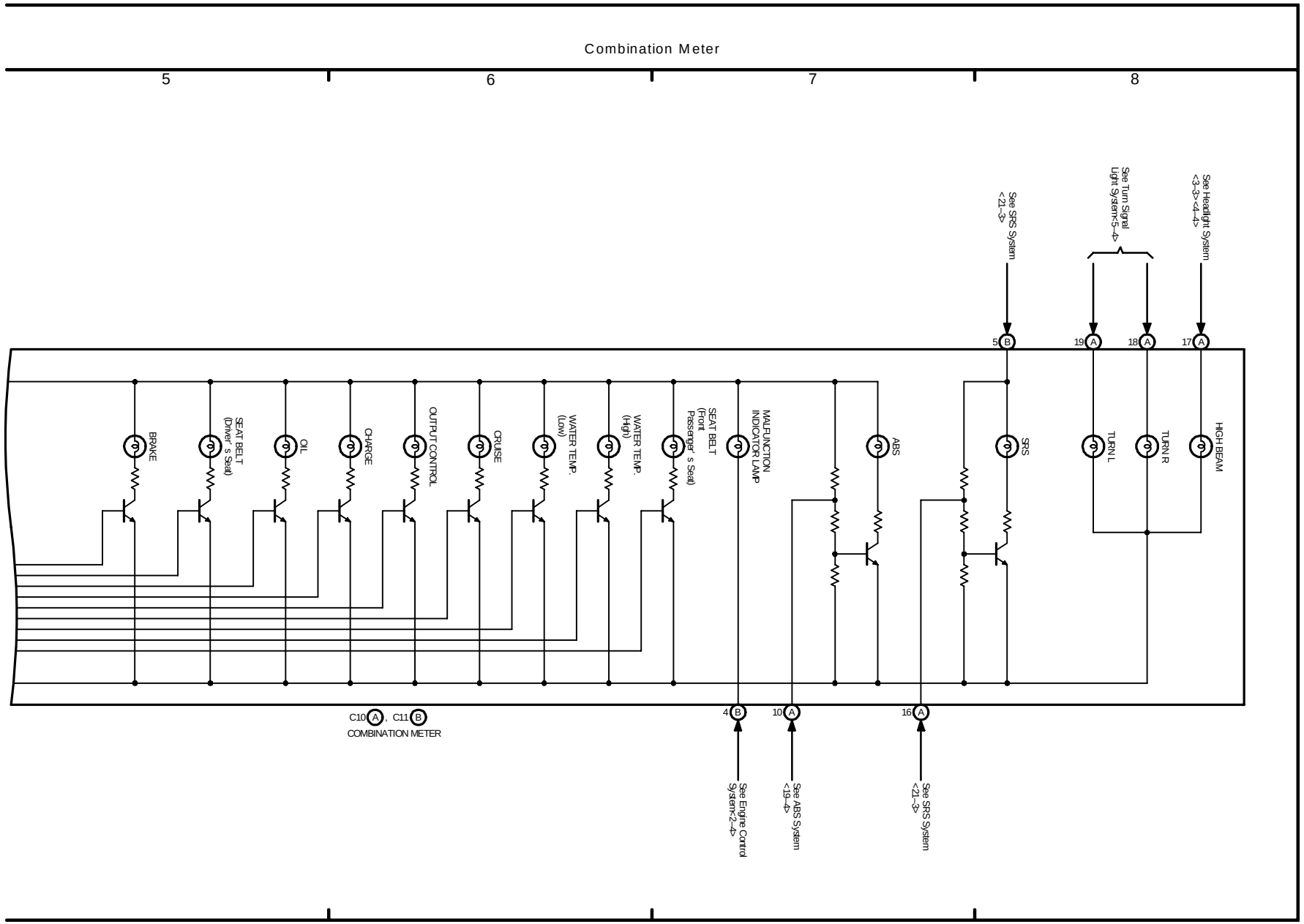

cardiagn.com

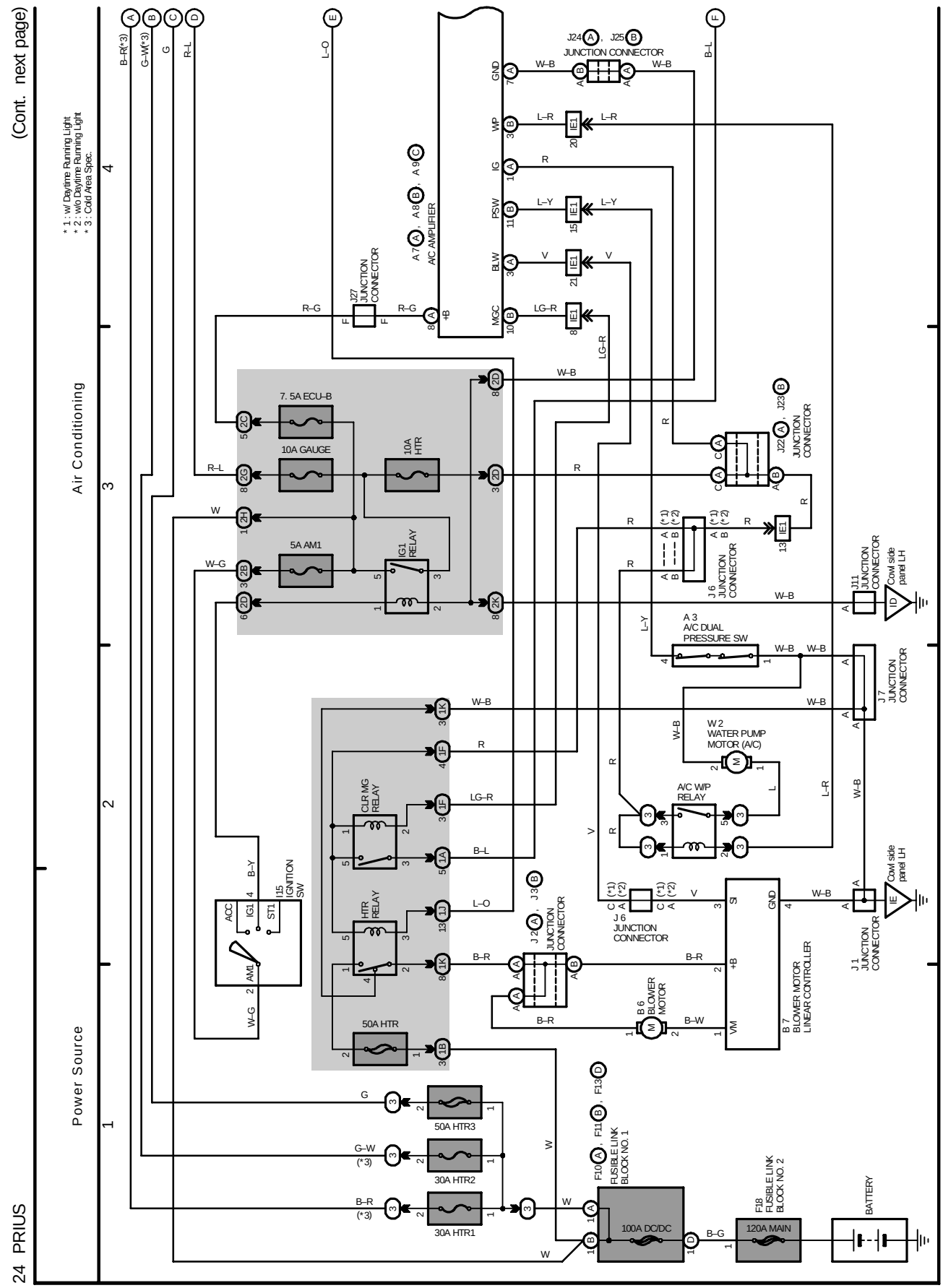

cardiagn.com

(Cont. next page)

Air Conditioning

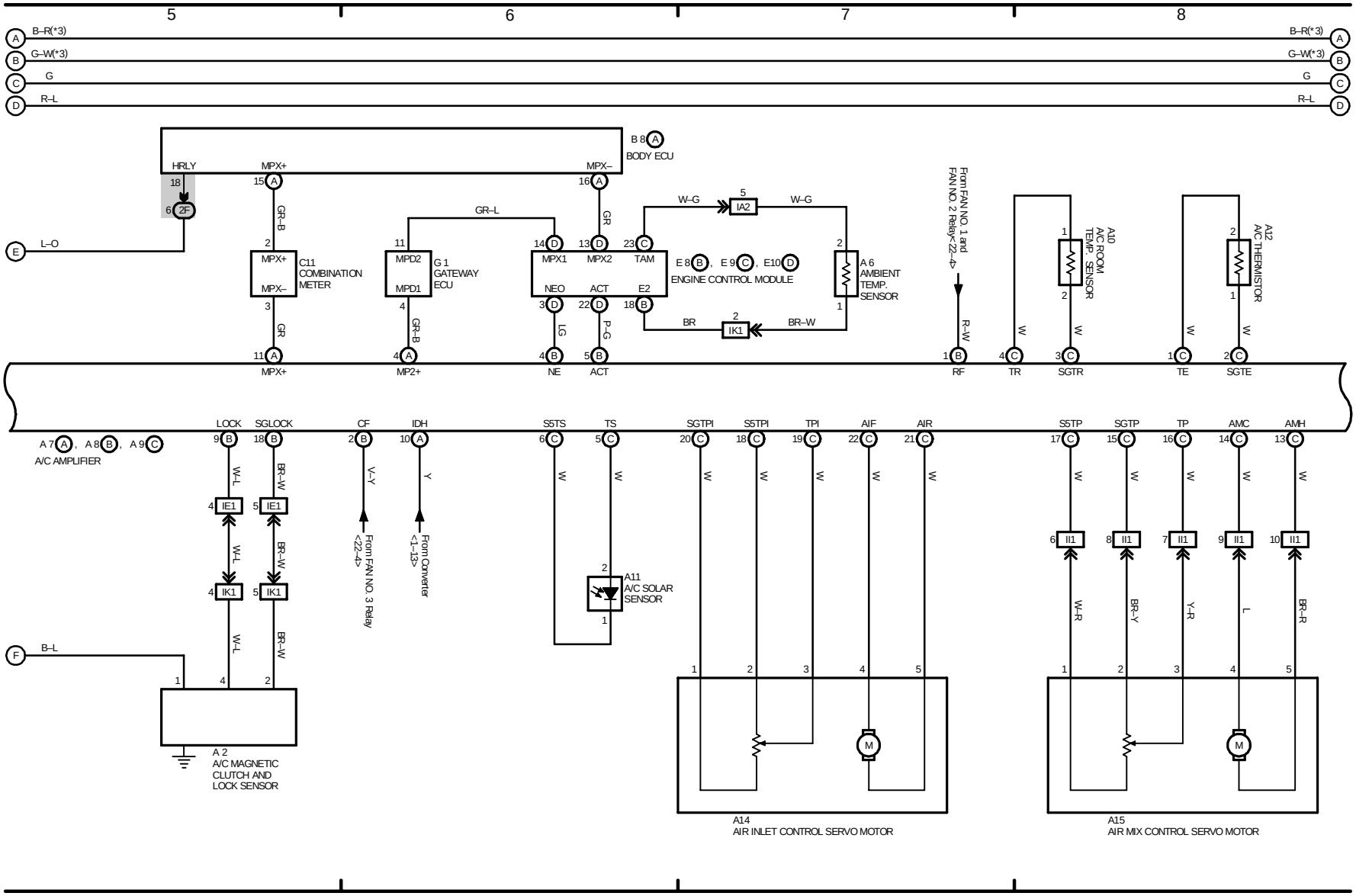

cardiagn.com

M

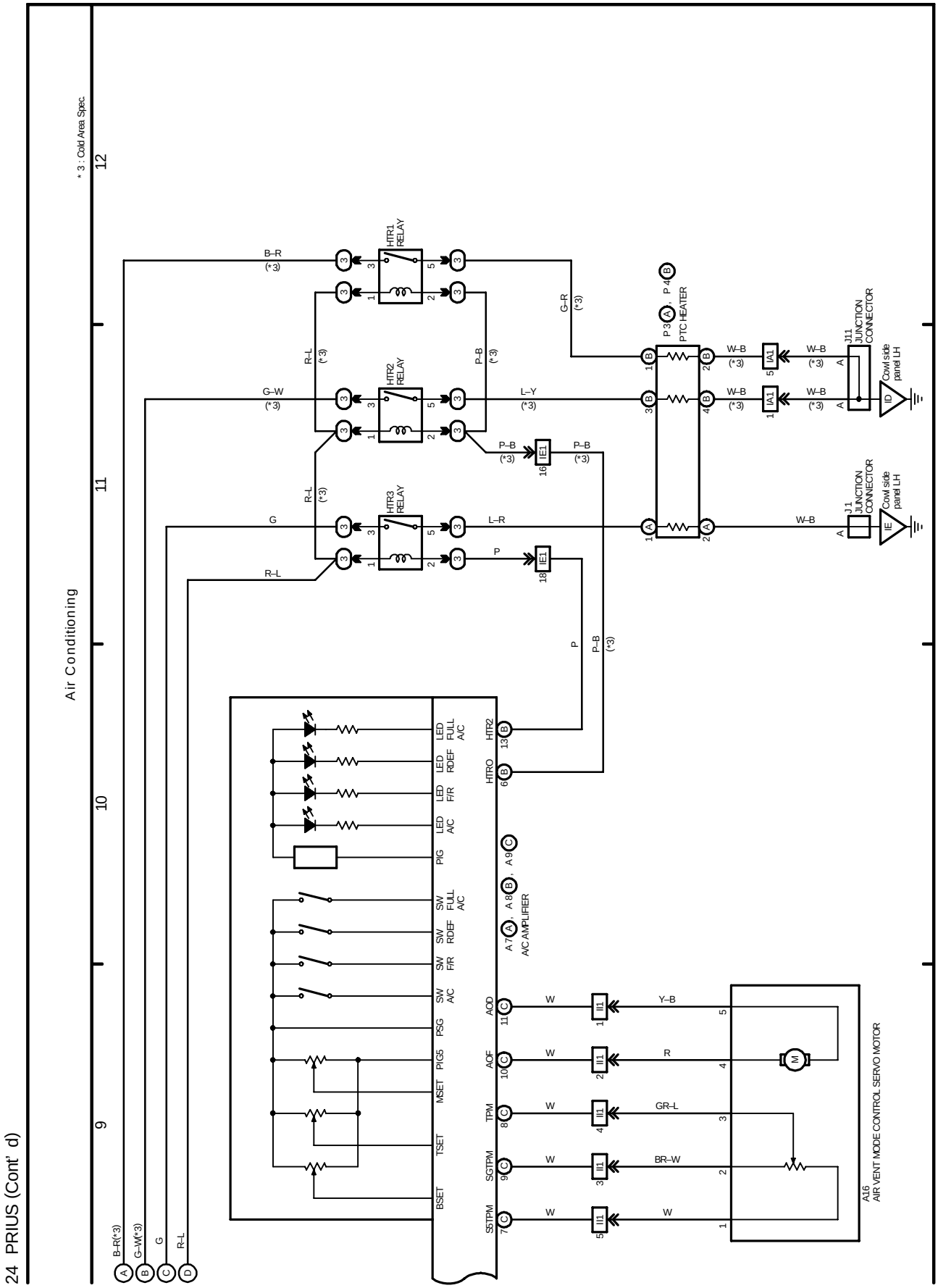

cardiagn.com