Workshop Manual

Ateca 2017 ➤
León 2013 ➤
León ST 2013 ➤

4 cyl. petrol engine (1.8 l and 2.0 l with direct injection, 4 V, exhaust gas turbocharger, timing chain, EA 888 III. Gen)									
Engine ID	CJSA	CJXA	CJXE	CJSB	CJXH	CJXC	CJXG	DNUC	DNUE

Edition 10.2018

List of Workshop Manual Repair Groups

Repair Group

Technical information should always be available to the foremen and mechanics, because their careful and constant adherence to the instructions is essential to ensure vehicle road-worthiness and safety. In addition, the normal basic safety precautions for working on motor vehicles must, as a matter of course, be observed.

Contents

00 – Technical data

1 Security standards

(ERL003849; Edition 10.2018)

1.1 Safety precautions when working on fuel supply system

Risk of injury due to highly-pressurised fuel.

The fuel system is pressurised. Injury possible due to fuel which may spurt out.

Before opening the fuel system:

– Wear safety goggles.

– Wear protection gloves.

– Release pressure: place clean cloth around connection and carefully open connection.

Risk of fire due to escaping fuel

If the battery is connected, the door contact switch will activate the fuel pump when the door is opened. Escaping fuel may ignite and cause a fire.

– Disconnect the fuel pump from the power supply before opening the fuel system.

1.2 Safety precautions for working on vehicles with start-stop system.

Risk of injury due to unexpected engine start-up

In the case of vehicles with activated Start/Stop system, the engine may start up unexpectedly. The status of the Start/Stop system is indicated by a message in the dash panel insert.

– Deactivate Start/Stop system by switching off the ignition.

1.3 Safety precautions during road tests in which testing and measuring equipment is used

Risk of injury due to unsecured test and measuring equipment.

If the front passenger airbag deploys in the event of an accident, the test and measuring devices being tossed around become hazardous projectiles.

– Secure the test and measuring devices on the rear seat using a seat belt.

or

– A second person should operate the test and measuring devices on the rear seat.

1.4 Safety precautions when working on ignition system

Risk of injury due to electric shock

The ignition system is under high-voltage when the engine is running. Touching the ignition system may result in an electric shock.

– Do not touch or disconnect ignition cables when the engine is running or being turned at starter speed.

Risk of damage to components

If the engine is washed while running and if electric cables are connected or disconnected, components may become damaged.

– Switch off the ignition before connecting or disconnecting electric cables.

– Also, switch off the ignition before washing the engine.

1.5 Safety precautions when working on the cooling system

Risk of scalding by hot coolant

The cooling system is under pressure when the engine is hot. Hot steam/hot coolant can escape - risk of scalding.

– Wear protection gloves.

– Wear safety goggles.

– Reduce excess pressure by covering cap of coolant expansion tank with cloths and opening it carefully.

1.6 Safety precautions when working on exhaust system

CAUTION

Risk of poisoning due to chemical substances

Exhaust gas temperature senders may contain chemical substances. There is a risk of poisoning or injuries to respiratory system.

- **Never open an exhaust gas temperature sender by cutting, sawing or any other means.**

CAUTION

Risk of injury due to hot condensate and particles in the exhaust system.

The exhaust system could contain hot condensate and/or particles. There is a risk of injury to the eyes, skin and respiratory system, as well as poisoning.

- **Always wear protective gloves and eye protection when cutting the exhaust system.**
- **When cutting, use an extraction system or otherwise ensure sufficient ventilation.**

There is a danger of the damper element becoming damaged.

Do not allow the decoupling element to kink by more than 10°.

Do not subject the decoupling element to tensile force.

Do not damage wire mesh on decoupling element.

2 Identification

⇒ “2.1 Engine identification number/engine data”, page 5

2.1 Engine identification number/engine data

Engine number

The engine code is also stamped on the cylinder block behind the oil filter.

In addition, there is a sticker on the right of the timing chain cover with “engine code” and “serial number”.

The first 3 digits denote the mechanical design of the engine and are stamped on the engine. The fourth digit shows the engine output and torque and varies according to engine control unit. The four-character engine code can be found on the identification plate as well as on the vehicle data sticker. It can also be read from the engine control unit.

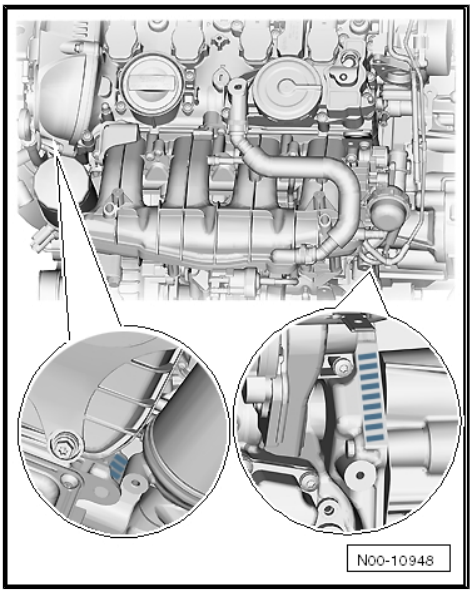

Note

Installation location of vehicle data plate ⇒ Maintenance ; Booklet 501 ; Vehicle data plate .

Codes		CJSA	CJSB	CJXA	CJXE
Exhaust emission standard		EU 6	EU6	EU6	EU6
Displacement	l	1.8	1.8	2.0	2.0
Engine output	kW at rpm	132/5100 … 6200	132/4500 … 6200	206/5700 … 6200	195/5350 … 6600
Torque	Nm at rpm	250/1250 … 5000	280/1350 … 4500	380/1750 … 5600	350/1700 … 5300
Cylinder bore ∅	∅ mm	82.5	82.5	82.5	82.5
Stroke	mm	84.2	84.2	92.8	92.8
Compression		9.6:1	9.6:1	9.3:1	9.3:1
ROZ		95	95	98[1)]	98[1)]
Injection system/ ignition system		Direct injection and intake manifold injection	Direct injection and intake manifold injection	Direct injection and intake manifold injection	Direct injection and intake manifold injection
Firing order		1-3-4-2	1-3-4-2	1-3-4-2	1-3-4-2
Charging		Turbocharger	Turbocharger	Turbocharger	Turbocharger
Camshaft timing adjustment		yes	yes	yes	yes
Secondary air injection		no	no	no	no
Valves per cylinder		4	4	4	4
Particulate filter		no	no	no	no
Oil pressure control		yes	yes	yes	yes

Codes	CJSA	CJSB	CJXA	CJXE

- 1) Unleaded petrol RON 95 can also be used, though power is reduced

Code		CJXC	CJXH	CJXG
Exhaust emission standard		6	EU6	EU6
Displacement	l	2.0	2.0	2.0
Engine output	kW at rpm	221/5500 … 6200	213/5900 … 6400	228/5800 to 6500
Torque	Nm at rpm	380/1800 … 5500	350/1700 … 5800	380/1850 to 5700
Cylinder bore ∅	∅ mm	82.5	82.5	82.5
Stroke	mm	92.8	92.8	92.8
Compression		9.3:1	9.3:1	9.3:1
ROZ		98[1)]	98[1)]	98[1)]
Injection system/ ignition system		Direct injection and intake manifold injection	Direct injection and intake manifold injection	Direct injection and intake manifold injection
Firing order		1-3-4-2	1-3-4-2	1-3-4-2
Charging		Turbocharger	Turbocharger	Turbocharger
Camshaft timing adjustment		yes	yes	yes
Secondary air injection		no	no	no
Valves per cylinder		4	4	4
Particulate filter		no	no	no
Oil pressure control		yes	yes	yes

- 1) Unleaded petrol RON 95 can also be used, though power is reduced

Code	DNUC	DNUE
Exhaust emission standard	6	EU6
Displacement l	2.0	2.0
Engine output kW at rpm	213/5400 to 6500	221/5300 to 6500
Engine torque Nm at rpm	380/1950 to 5300	400/2000 to 5200
Cylinder bore ∅ mm	82.5	82.5
Stroke mm	92.8	92.8
Compression	9.3:1	9.3:1
ROZ	98	98
Ignition/injection system	Direct injection and intake manifold injection	Direct injection and intake manifold injection
Firing order	1-3-4-2	1-3-4-2
Charging	Turbocharger	Turbocharger
Camshaft timing adjustment	yes	yes
Secondary air injection	no	no
Valves per cylinder	4	4
Particulate filter	yes	yes
Oil pressure control	yes	yes

3 Repair instructions

3.1 Cleaning rules

Even slight soiling can cause faults. Following the following rules for cleanliness when working on the fuel supply system and injection system or on the turbocharger:

- Carefully clean connection points and the surrounding area with engine cleaner or brake cleaner and dry thoroughly before opening.
- Seal off open pipes/lines and connections immediately with clean plugs, e.g. from engine sealing cap set - VAS 6122- .
- Place removed parts on a clean surface. Cover with lint-free cloths only.
- Carefully cover opened components or seal them if repairs cannot be carried out immediately.
- Only install clean components: Only unpack replacement parts immediately prior to installation. Do not fit parts that have been stored unpackaged (e.g. in tool boxes etc.).
- When the system is open, avoid working with compressed air and moving vehicle.
- Make sure that no fuel runs onto the fuel hoses. Should this occur, the fuel hoses must be cleaned again immediately.
- Protect disconnected electrical connectors from dirt and water, and reconnect them only when dry.

3.2 Foreign particles in engine

- Before working on the engine, all open inlet and exhaust ports must be sealed with suitable plugs (from engine bung set - VAS 6122-) to prevent foreign particles from entering the engine.

3.3 Contact corrosion

Contact corrosion can occur if unsuitable fasteners are used (e.g. bolts, nuts, washers, etc.).

For this reason, only fasteners with a special surface coating are installed in the vehicle.

Furthermore, rubber and plastic components as well as adhesives are made of non-conductive materials.

If there is any doubt about the suitability of parts, a general rule is to use new parts ⇒ Electronic Parts Catalogue .

3.4 Routing and attachment of pipes, hoses and wiring

- Mark fuel lines, vacuum lines, pipes/hoses for activated charcoal filter system and electrical wiring etc. before removal so they can be re-installed in the original positions and correctly

connected. Where necessary, make sketches or take photographs.

- To prevent damaging pipes, hoses and wiring, ensure sufficient clearance from all moving or hot components in engine compartment (little space in engine compartment).

3.5 Installing radiators and condensers

Even if installed correctly, the radiator, the condenser and the charge air cooler may have small dents in their fins. This does not mean that the components are damaged. It is not permissible to renew radiators, charge air coolers or condensers only because of such minor dents.

3.6 Vacuum system: checking

Special tools and workshop equipment required

- Hand vacuum pump - VAS 6213-

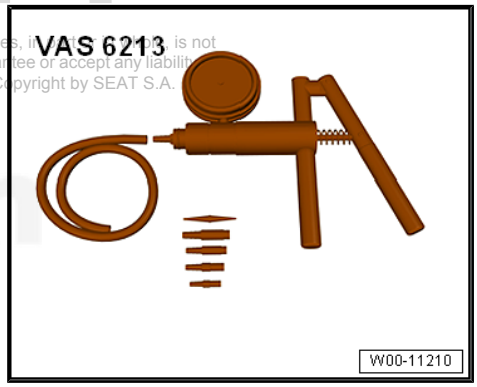

Operation process

– Check all vacuum lines in the complete vacuum system for:

- Cracks
- Traces of animal bites
- Kinked or crushed lines
- Lines porous or leaking

– Check vacuum line to solenoid valve and from solenoid valve to corresponding component.

– If a fault is stored in the event memory, check all vacuum lines leading to the corresponding component, and also check the remaining vacuum lines leading to other components.

– If it is not possible to build up pressure with the hand vacuum pump - VAS 6213- or if the pressure drops again immediately, check the hand vacuum pump and connecting hoses for leaks.

10 – Removing and installing engine

1 Removing and installing the engine

⇒ “1.1 Engine removal”, page 11

⇒ “1.2 Separating engine and gearbox”, page 29

⇒ “1.4 Securing engine to engine and gearbox support”, page 37

⇒ “1.5 Installing engine”, page 39

1.1 Engine removal

Special tools and workshop equipment required

- Hydraulic column jack - VAS 6931-

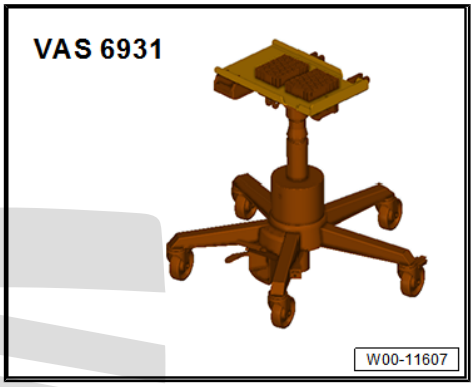

- Support bridge - T10323- for vehicles with all-wheel drive

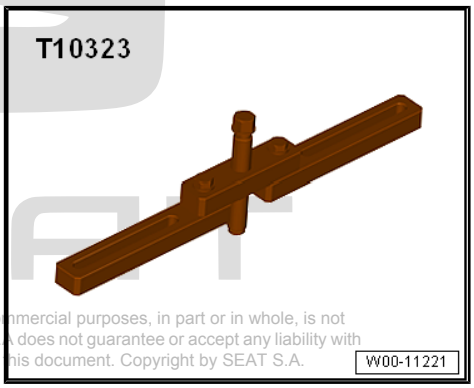

- Engine bracket - T10359 A-

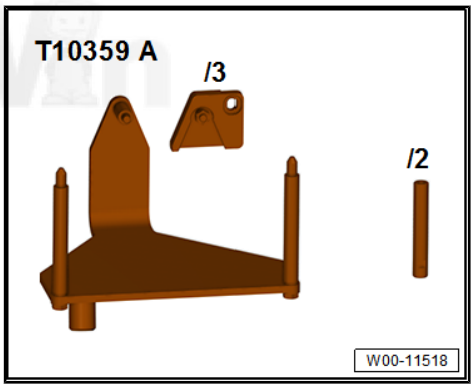

- Pins - T10359/2-
- Adapters - T10359/3-

- Securing element from gearbox support - 3282-

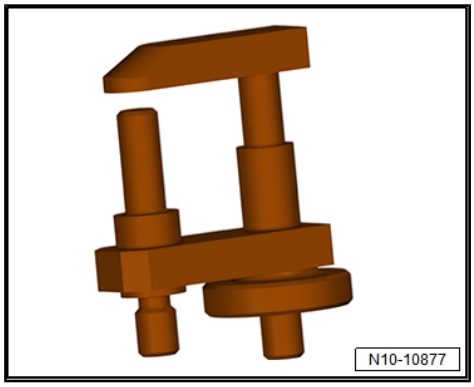

- Pressing-off lever - 80 - 200-

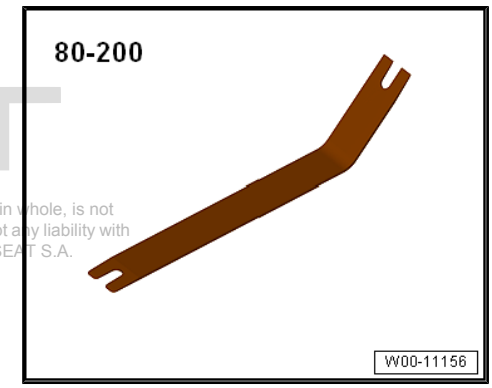

- Protective glasses
- Protective gloves
- Double ladder

Removing

Note

- *The engine is removed downwards with gearbox. To do this, the subframe needs to be removed.*
- *After removing of coolant or fuel lines, these must be sealed using the engine sealing cap set - VAS 6122- to prevent dirt from entering or coolant or fuel from running out.*
- *Fit cable ties in the original positions when installing.*
- *All cable ties which are opened or cut through when engine is removed must be replaced in the same position when engine is installed.*

CAUTION

On a warm motor, the cooling system is under high pressure. Hot steam/hot coolant can escape - risk of scalding.

Risk of scalding to skin and body parts.

– Wear protection gloves.
– Wear safety goggles.
– Reduce excess pressure by covering cap of coolant expansion tank with cloths and opening it carefully.

– Open filler cap -arrow- on coolant expansion tank.

– Remove engine cover panel ⇒ page 57 .

– Remove front parts of left and right front wheel housing liners ⇒ General body repairs, exterior; Rep. gr. 66 ; Wheel housing liner; Assembly overview – front wheel housing liner .

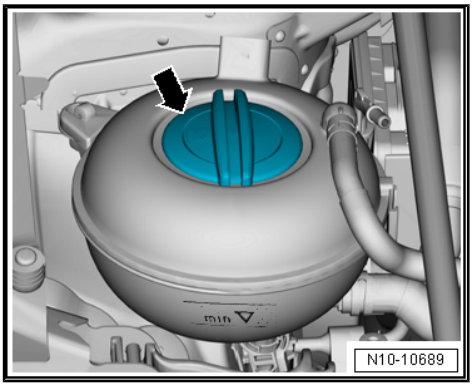

– Release and pull off connector -1- on oil level and oil temperature sender - G266- .

– Unscrew bracket -2- from subframe.

– Remove subframe together with steering rack ⇒ Running gear, axles, steering; Rep. gr. 40 ; Subframe; Removing and installing subframe with steering rack .

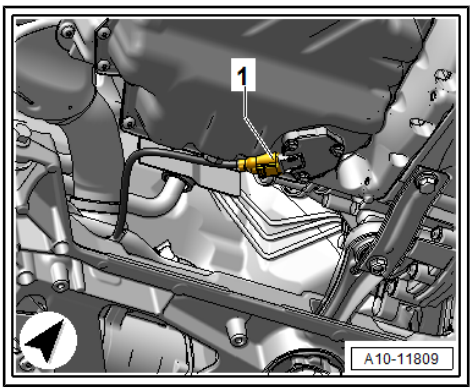

– Disconnect electrical connector -1-. Lift retaining clip -2-, and loosen hose clip -3-.

– Place drip tray for workshop hoist - VAS 6208- underneath.

– Pull off coolant hose and connection, and drain coolant.

– For reasons of space, remove the air filter housing together with the intake hose ⇒ page 356 .

– Disconnect battery ⇒ Electrical system; Rep. gr. 27 ; Battery; Disconnecting and connecting battery .

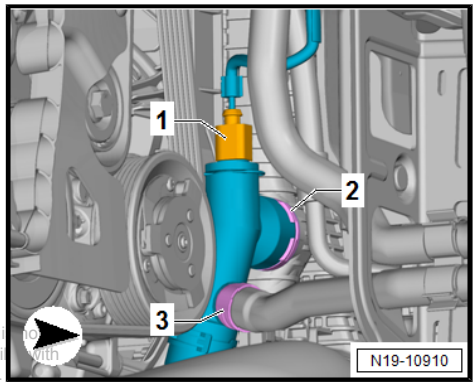

– Remove battery tray -1- ⇒ Electrical system; Rep. gr. 27 ; Battery; Removing and installing battery tray .

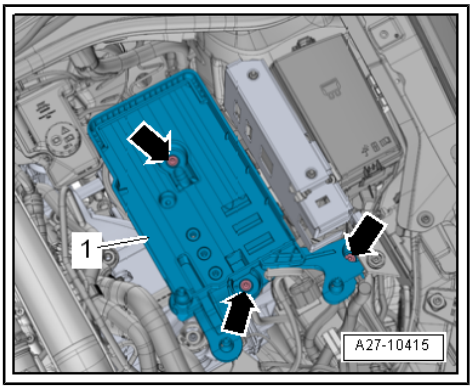

– Lay coolant hose -3- to one side.
– Unscrew bolts -1-.
– Release locking lugs-arrow-, unclip air hose -2- from the front end and remove in -direction of the arrow-.

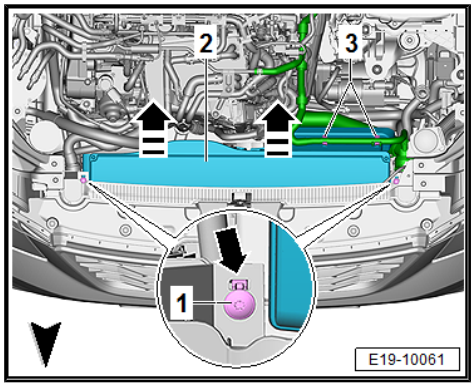

– Disconnect vacuum hose -2-.
– Press release tabs on vacuum hose -1-, and remove hose from vacuum pump.

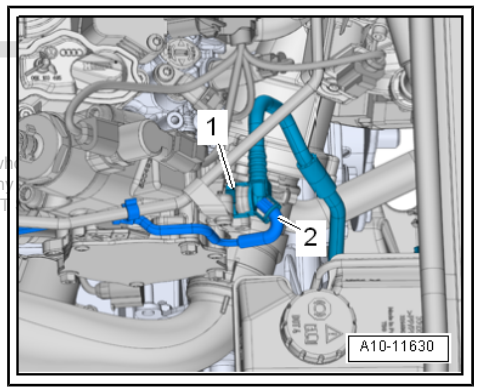

Vehicles with no auxiliary heater

– Lift the retaining clips -arrows- and detach the coolant hoses from the heat exchanger for heater.
– Guide coolant hoses downwards and drain off coolant.

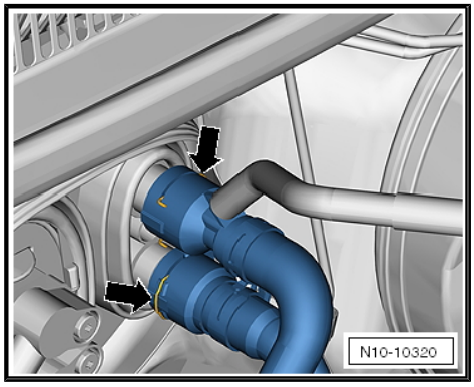

Vehicles with auxiliary heater

– Release hose clip -1-, lift retaining clips -arrows-, and disconnect coolant hoses.

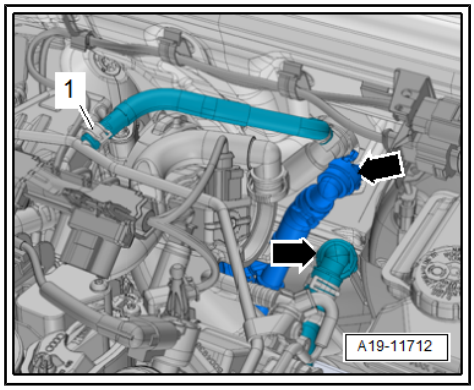

Vehicles with auxiliary radiator

– Loosen hose clips -1- and -2- and remove coolant hoses.

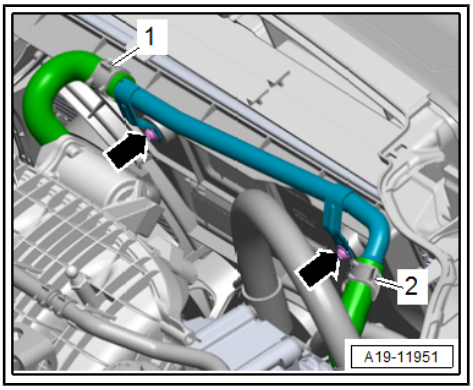

Continued for all vehicles

– Detach electrical connectors -1, 2- from bracket, unplug connectors and move electrical wiring clear.

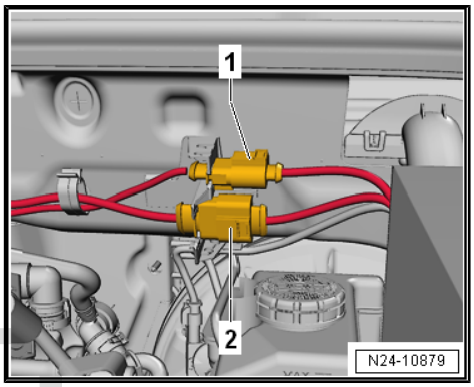

– Unscrew bolt -2-; remove screw-type clip.

– Loosen nuts -1, 3- and push to rear. (Illustration shows engine removed.)

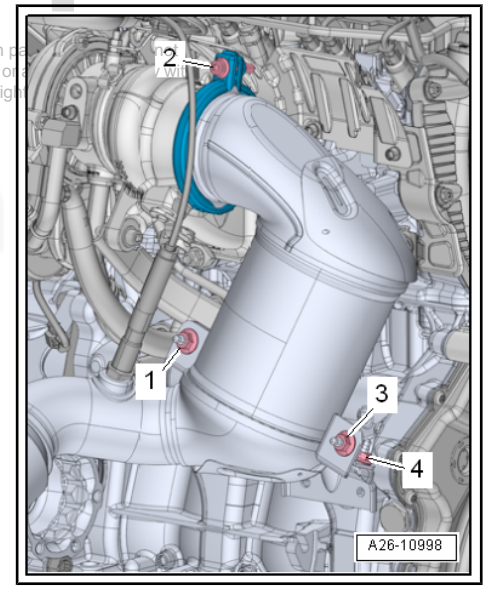

For vehicles with particulate filter

– Disconnect electrical connector from pressure differential sender for particulate filter - G1037- -arrow-.

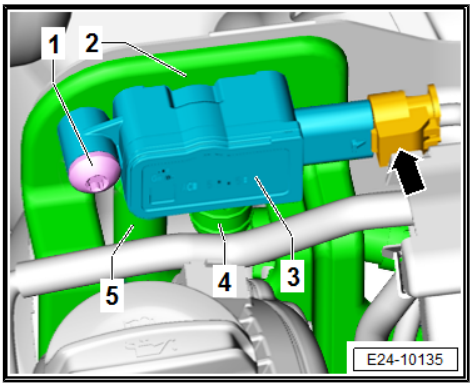

– Remove bolts -arrows- and nuts -1-.

– Remove heat shield -2-.

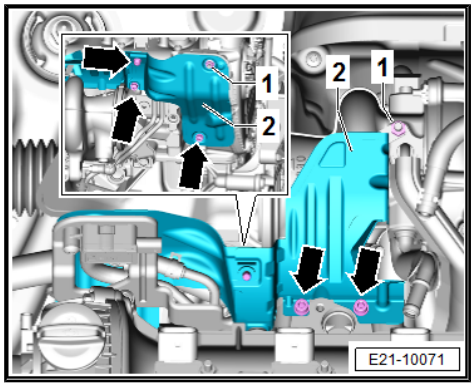

– Unscrew bolts -arrows- on bracket for pressure differential sender for particulate filter - G1037- -1-.

– Move bracket for pressure differential sender for particulate filter - G1037- -1- to the rear.

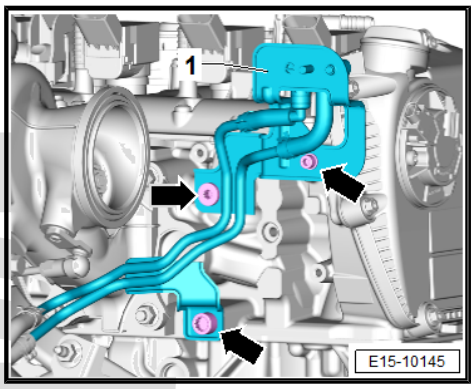

Continued for all vehicles

CAUTION

The fuel system is pressurised.

Risk of injury due to fuel which may spurt out.

- **Wear safety goggles.**
- **Wear protection gloves.**
- **Release pressure: place clean cloth around connection and carefully open connection.**

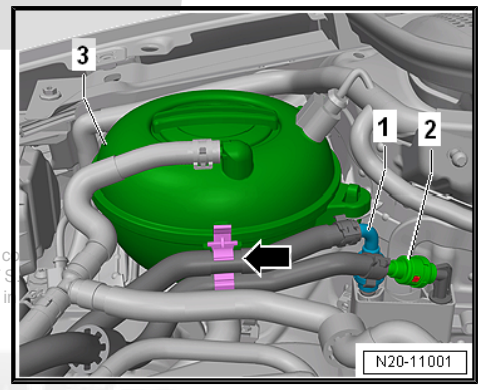

– Disconnect hose couplings -1- and -2- ⇒ Rep. gr. 20 ; Plug-in connectors; Disconnecting plug-in connectors . Unfasten hoses from expansion tank -3-.

– Release hose clips -1- and -2- and detach coolant hoses.

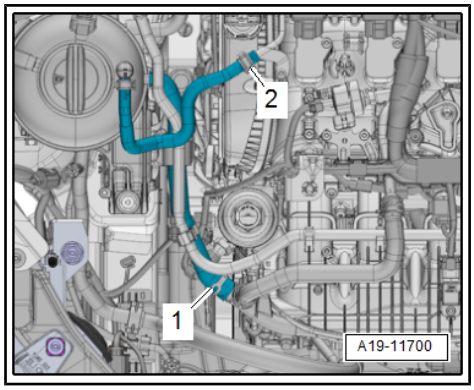

Vehicles with windscreen washer tank, right side

– Remove windscreen washer tank filler -2- ⇒ Electrical system; Rep. gr. 92 ; Windscreen washer system; Removing and installing tank for windscreen washer system .

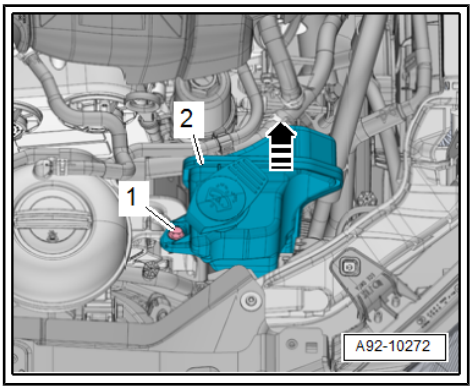

Continued for all vehicles

– Lift the retaining clip -arrow-, remove the coolant hose at the top left from the radiator.

– Remove radiator cowl ⇒ page 300 .

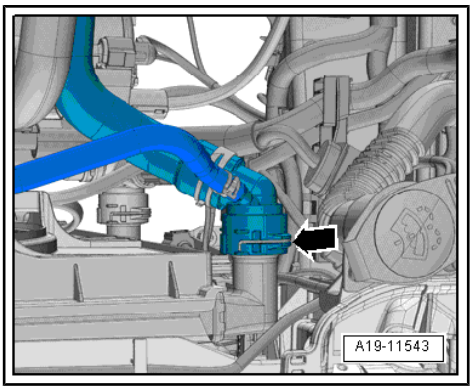

– Release the hose clamp -2-.

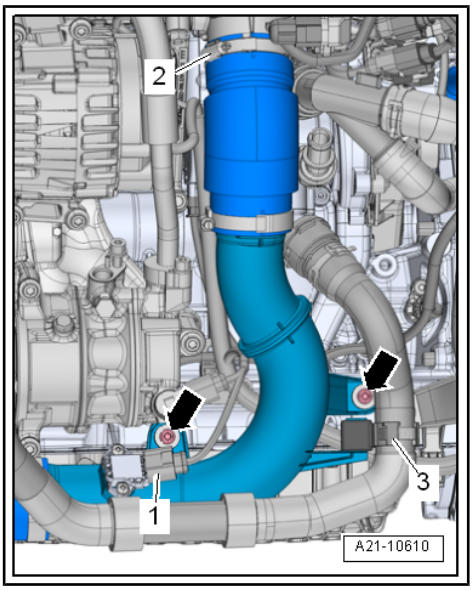

Note

Use removal lever - 80 - 200- to lever out the wiring clips when performing the next work steps.

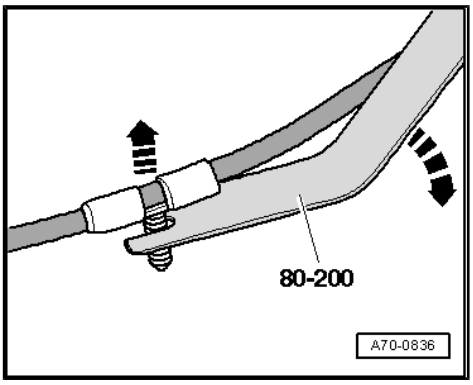

– Separate connector -1- on engine control unit - J623- ⇒ page 376 .

– Remove connectors -2, 3- from retainer and disconnect them.

– Move clear electrical wiring.

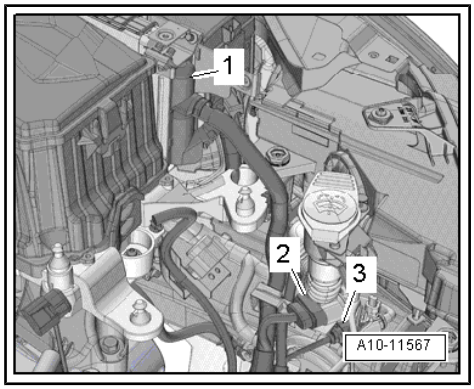

– Release catches -arrows- and detach cover -1- for electronics box in engine compartment.

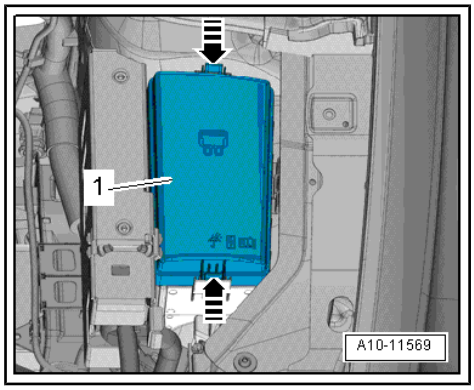

– Release catch using a screwdriver -arrow- and detach cover -1- for electronics box in engine compartment upwards.

– Remove nut -arrow-, detach electrical wiring and move clear.

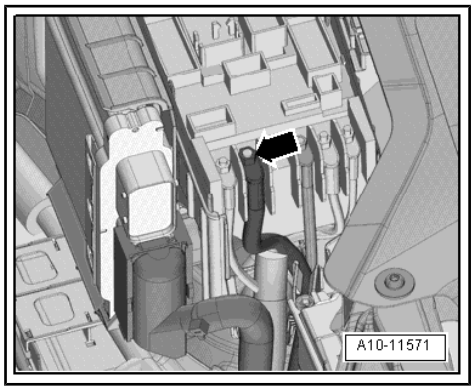

Vehicles with manual gearbox

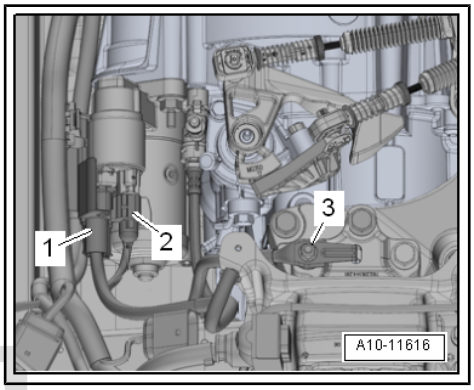

- Unplug electrical connector -2-.
- Push back cover -1- for positive battery terminal and unscrew positive wire from starter solenoid switch.
- If present, unscrew the nut -3- hand remove the earth wire.

Note

Depending on vehicle version, the earth wire is secured to the starter bolt.

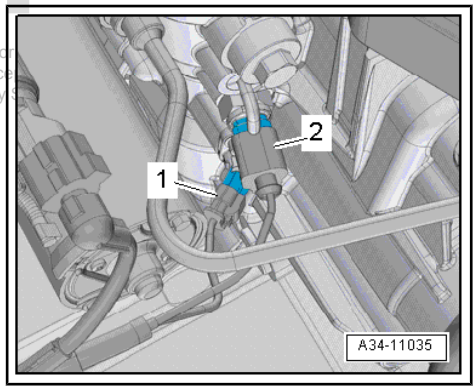

- Disconnect the electrical plug connectors -1- and -2- on the front left of the gearbox:

1 - For gearbox neutral position sender - G701-

2 - For reversing light switch - F4-

- Disconnect gear selector cable and gate selector cable from gearbox. Then, unbolt cable support bracket, and lay it to one side together with cables ⇒ Rep. gr. 34 ; Selector mechanism; Removing and installing selector mechanism .
- Detach line leading to clutch slave cylinder ⇒ Rep. gr. 30 ; Clutch mechanism; Removing and installing clutch slave cylinder .

Vehicles with dual clutch gearbox

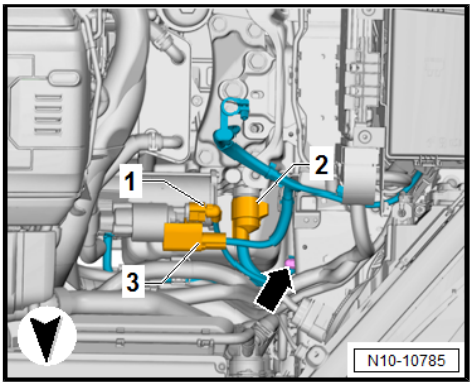

- Disconnect connector -1-.
- Push back cover for battery positive terminal -3-, and unbolt battery positive cable from starter solenoid switch.
- Loosen nut -arrow-, and remove earth wire.

Note

Depending on vehicle version, the earth wire is secured to the starter bolt.

- Touch earth with your hand (without gloves) to discharge any static electricity.
- Do NOT touch connector contacts in gearbox connector with your hands.
- Turn retainer catch anti-clockwise and unplug electrical connector -2- for mechatronic unit for dual clutch gearbox - J743- .
- Disconnect selector lever cable from gearbox, and pull it out of cable support bracket ⇒ Rep. gr. 34 ; Selector mechanism; Removing and installing selector mechanism .

Vehicles with automatic gearbox

– Using an open-end spanner, for example, lever selector lever cable -1- off gearbox selector lever -2-.

– Pull connector -6- off multifunction switch - F125- and lay electrical wiring on bracket aside.

– Unscrew bolts -5- from cable support bracket -4-. Do not detach securing clip -3-.

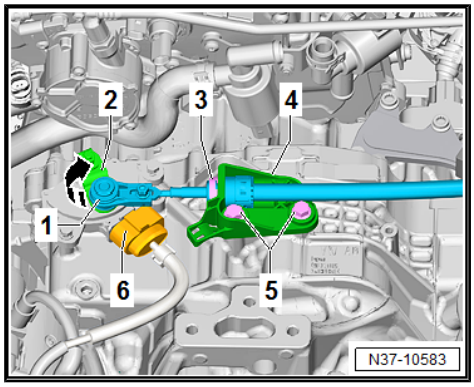

– Unhook selector lever cable -1- from securing clip -arrow-.

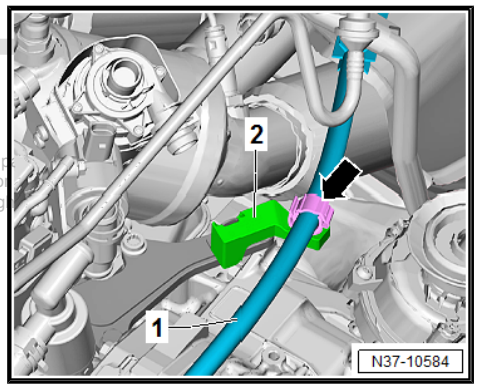

Note

- *Do not bend or kink gear selector cable.*
- *To ensure that the cable is not a hindrance when removing and installing the gearbox, raise the cable to a suitable position on the body and tie using e.g. cable ties.*

– Detach electrical connector from gearbox as follows. Push locking mechanism -1- in direction of arrow, fold out bar -2-, and pull connector -3- off gearbox.

– Separate electrical connectors from starter ⇒ Electrical system; Rep. gr. 27 ; Starter; Removing and installing starter .

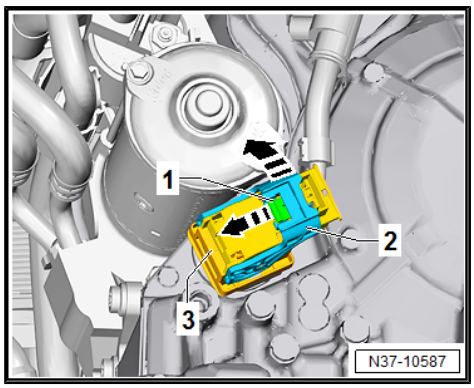

Continued for all vehicles

– Loosen bolts -arrows- for gearbox mounting approx. 2 turns.

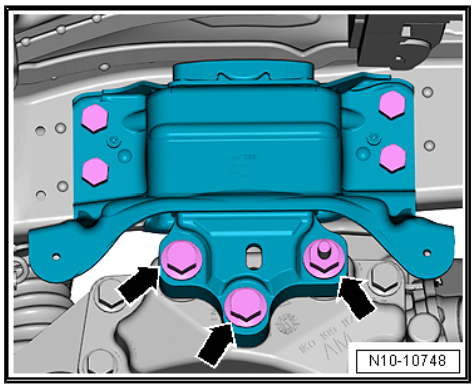

– Loosen bolts -arrows- for engine mounting approx. 2 turns.

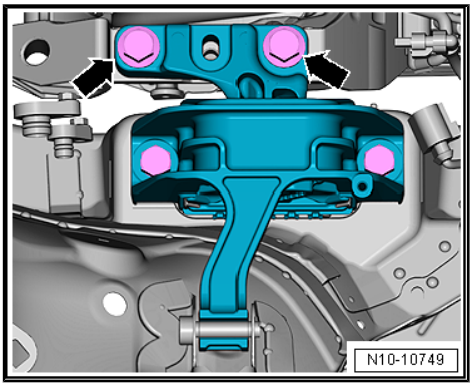

– Release hose clip -1- and -2-, and remove right charge air hose.

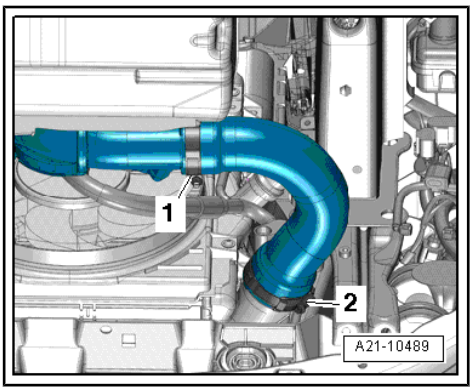

– Lay coolant hose -3- to one side.
– Unscrew bolts -arrows-.
– Unplug electrical connector -1- at charge pressure sender - G31- .
– Detach air pipe (right-side).

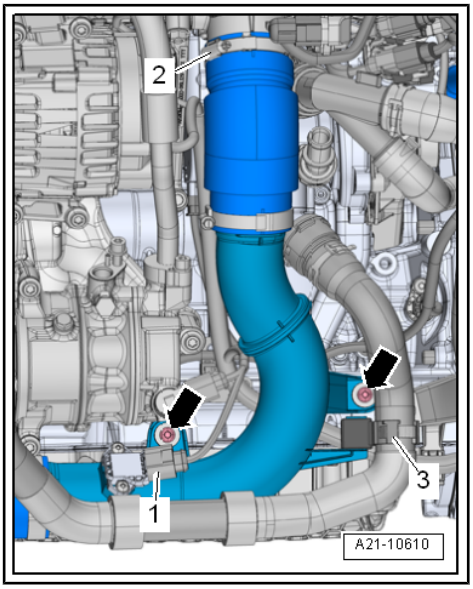

– Loosen hose clips -arrows-, and remove charge air hose -A-.
– Seal open lines and connections with clean plugs from engine bung set - VAS 6122- .

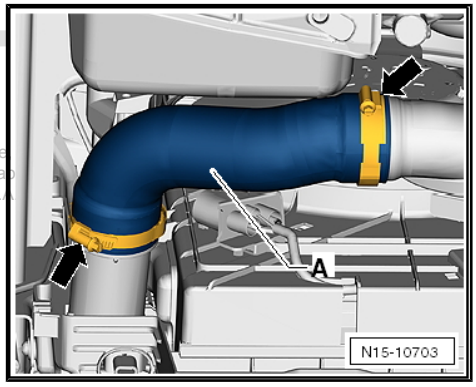

Vehicles with catalytic converter

– Loosen clamp -arrow-, and push it to rear.

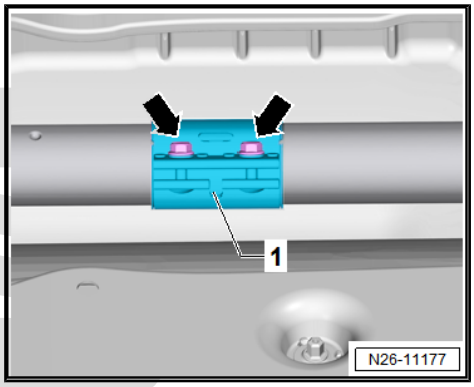

– Remove catalytic converter -1-.

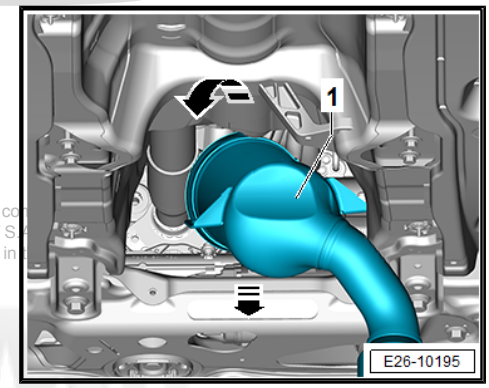

Vehicles with all-wheel drive

– Unscrew screws -arrows- with the bit - 3247- and remove heat shield -1-.

Continued for all vehicles

– Unbolt drive shafts from flange shafts on left and right ⇒ Running gear, axles, steering; Rep. gr. 40 ; Drive shaft; Removing and installing drive shaft .

– Tie up the drive shafts towards the rear.

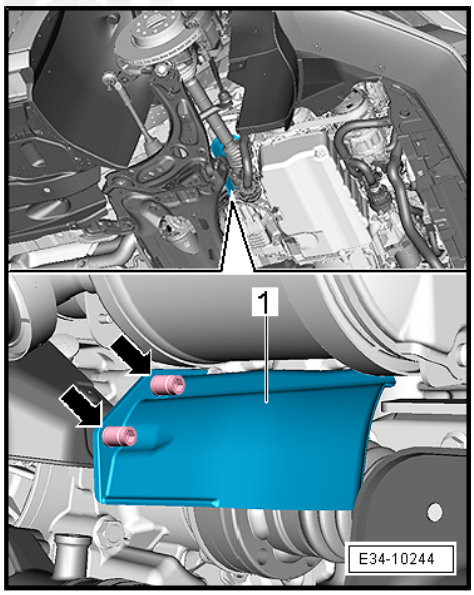

Note

Take care not to damage the surface coating of the drive shaft.

– If fitted, release electrical connector for auxiliary hydraulic pump 1 for gearbox oil - V475- -a-, and pull off connector -b-.

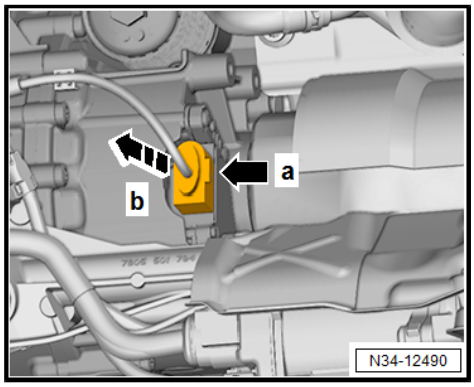

– If fitted, remove windscreen washer tank -1- ⇒ Electrical system; Rep. gr. 92 ; Windscreen washer system; Removing and installing windscreen washer tank .

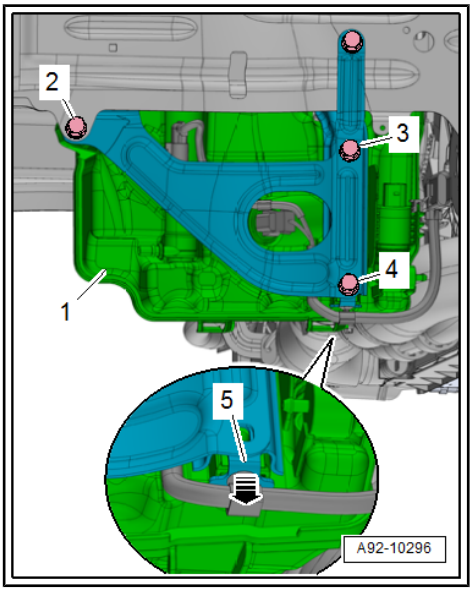

– Before removing, mark direction of rotation of poly V-belt with chalk or felt-tipped pen for re-installation.
– To slacken poly V-belt turn tensioner in clockwise direction -arrow-.
– Remove poly V-belt from pulley of air conditioner compressor and release tensioner. Remove locking pin - T10060 A- if necessary.

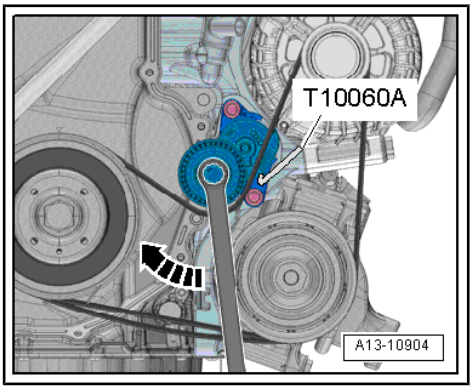

Vehicles with auxiliary radiator (left-side)

– Lift retaining clips -1, 2-, disconnect coolant hoses and drain off coolant.

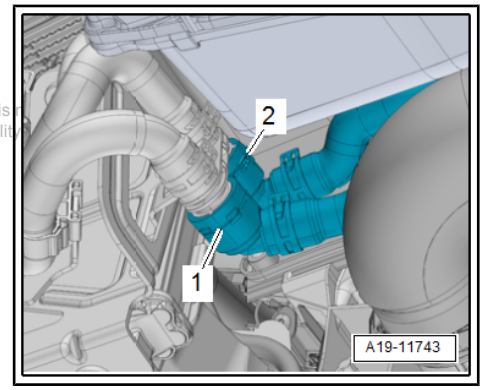

Vehicles with particulate filter, all-wheel drive and front-wheel drive

– Unclip wiring -1- and unscrew nuts -arrows-.

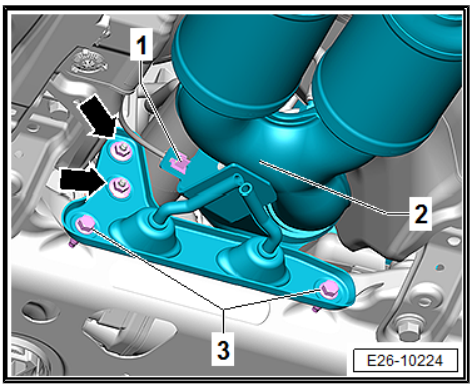

– Unscrew bolt -1- and remove wiring of pressure differential sender for particulate filter - G1037- -2- in -direction of arrow-.

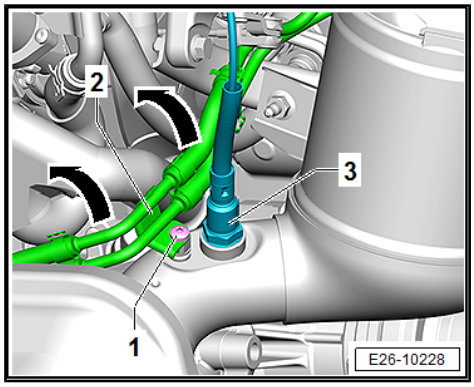

Note

Disregard -item 3-.

– Unscrew the four plastic nuts -arrows- on the left underbody trim -1- and move the trim slightly downward.

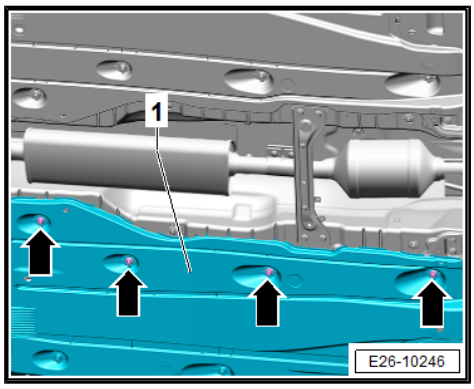

– Disconnect and remove the electrical connectors -1-, -2- of the temperature sensor in front of -G506- and behind -G527- particulate filter.

– Prise out the securing clip -arrow- (for heat shield of the centre tunnel) using the removal lever - 80 200- .

– Unclip the wiring of the sensors -G506- and -G527- from the fasteners.

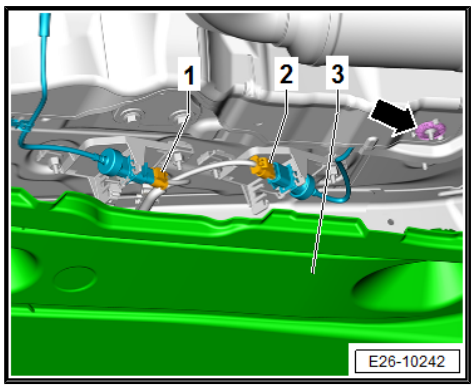

Vehicles with particulate filter, all-wheel drive

– Open spring-type clip -1- and remove the hose from pressure differential sender for particulate filter - G1037- .

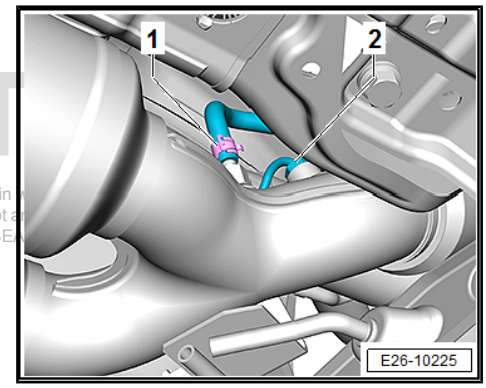

Note

Disregard -item 2-.

– Open spring-type clip -2- and remove the hose from pressure differential sender for particulate filter 1 - G1037- .

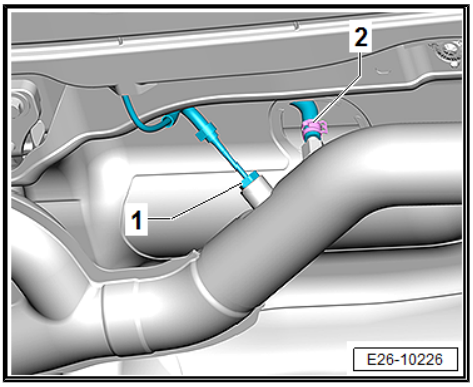

Note

Disregard -item 1-.

Vehicles with particulate filter, front

– Open spring-type clips and detach the hoses -2- and -3- from pressure differential sender for particulate filter - G1037-

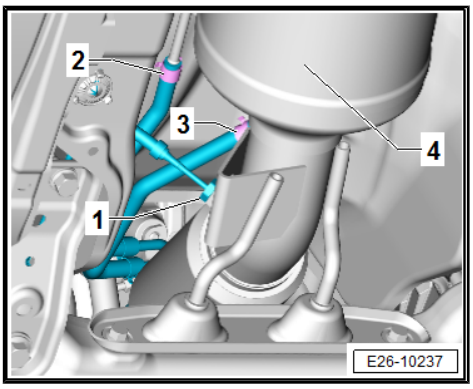

Note

Disregard -item 1-.

Vehicles with particulate filter, all-wheel drive and front-wheel drive

– Loosen clamp -arrow-, and push it to rear.

– Remove the particulate filter together with the sensors.

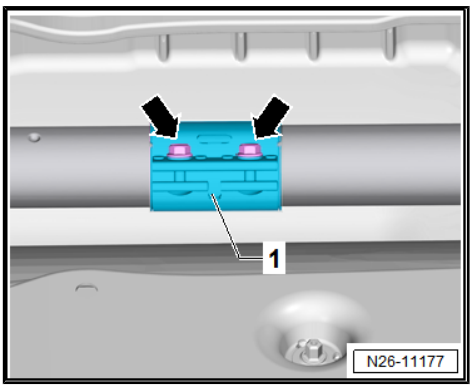

– Move bracket for pressure differential sender for particulate filter - G1037- -1- to the rear and tie it up.

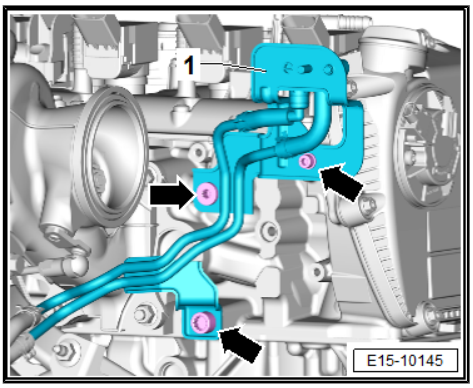

Further for models with all-wheel drive

– Unscrew bolts -A- and -B- from bevel box and remove heat shield -1-.

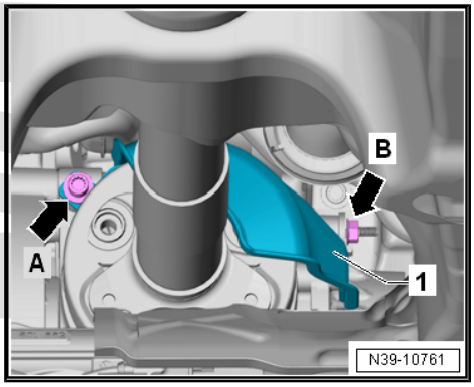

– Mark the position of the propshaft to the flange of the bevel box.

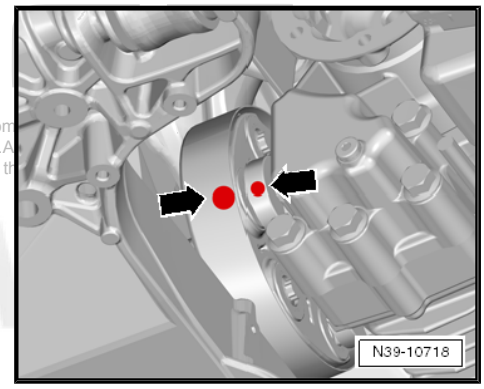

– To loosen and tighten propshaft, counterhold on rear final drive.

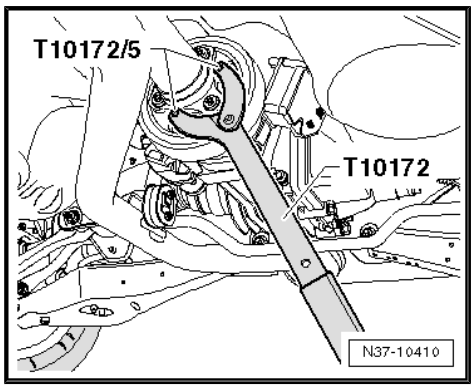

– Unscrew propshaft in the front bevel box -arrows-.

– Loosen clamp -1- between catalytic converter and front silencer, and push it in direction of travel -arrow-.

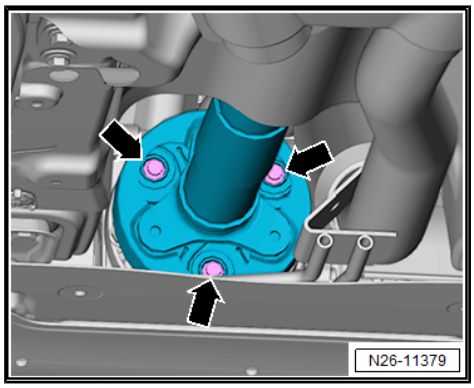

– Secure the support bridge - T10323- with a bolt on inside rear threaded hole for subframe.
– To do this, the securing bolt for subframe can be used.
– Put a cloth -A- on support .
– Pull propshaft off bevel box, and lay it to one side.

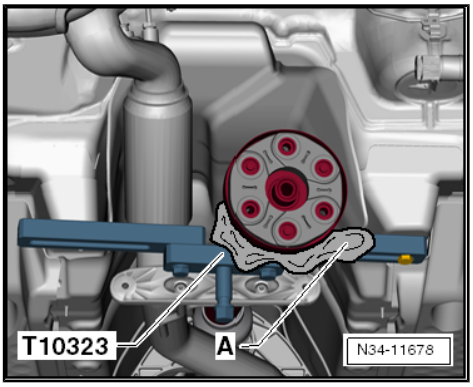

Vehicles with front differential lock

– Unplug electrical connector -arrow- of control unit for longitudinal locks - J647- .

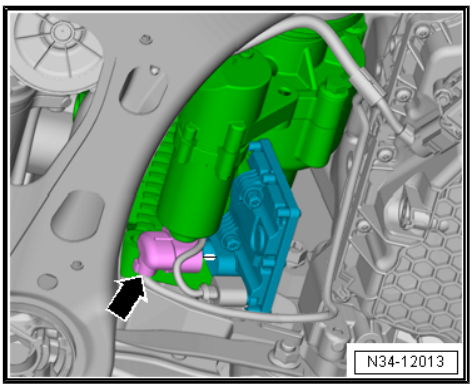

Continued for all vehicles

– Remove bolt -arrow- and push bracket for electrical wiring harness to one side.

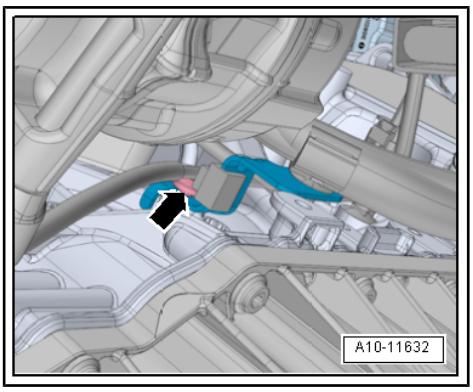

– Secure adapter -T10359/3- to engine support - T10359- , as shown in illustration.
– Use locking element -A- from gearbox support - T10359/2- to secure pin -3282- to engine support.
– Insert the engine bracket - T10359- into the engine and gearbox jack - V.A.G 1383 A- .

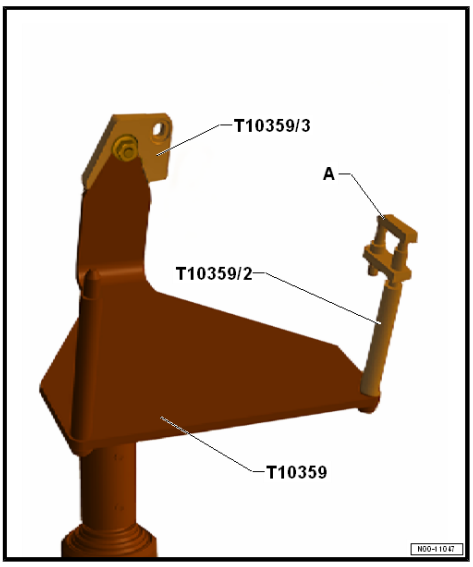

– Fit engine support - T10359- to cylinder block. Screw bolt -A- with spacer sleeve into cylinder block. Specified torque: 20 Nm.

– Secure engine with locking element -B-, and slightly lift engine with gearbox.

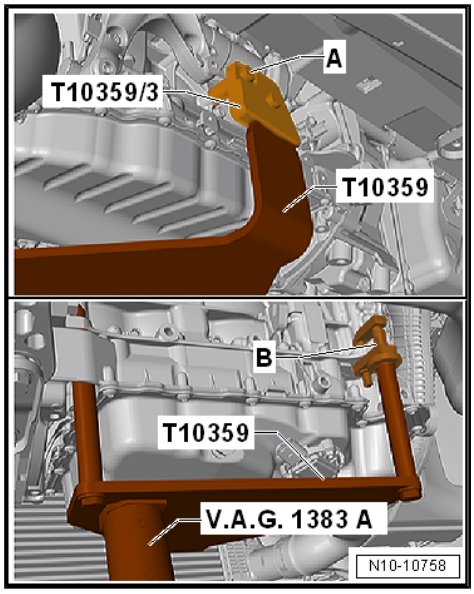

– Remove bolts -arrows- for engine mounting.

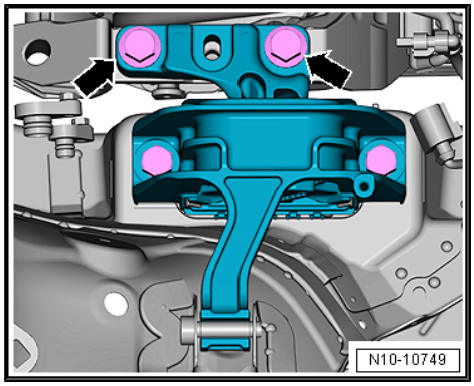

– Remove bolts -arrows- securing gearbox mounting.

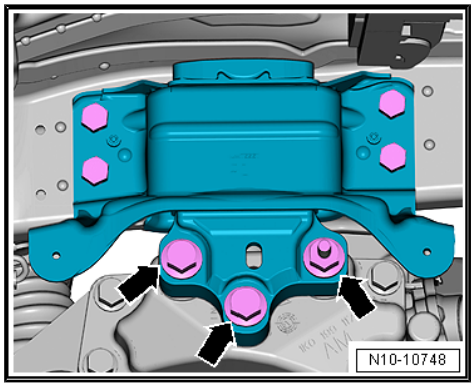

– Carefully lower engine/gearbox assembly. Check that all vacuum lines and electrical wiring between engine, gearbox and body have been detached while doing so.

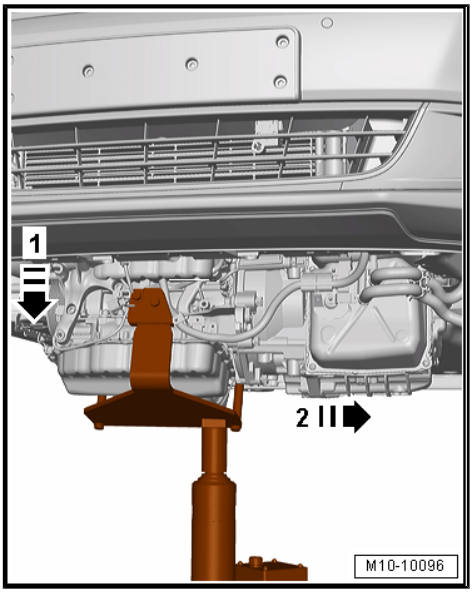

1.2 Separating engine and gearbox

⇒ "1.2.1 Separating engine and gearbox - vehicles with manual gearbox", page 29

⇒ "1.2.2 Separating engine and gearbox, vehicles with 7-speed dual clutch gearbox", page 31

⇒ "1.2.3 Separating engine and gearbox, vehicles with 6-speed dual clutch gearbox", page 33

1.2.1 Separating engine and gearbox - vehicles with manual gearbox

Special tools and workshop equipment required

♦ Hooks - 10 - 222 A /2-

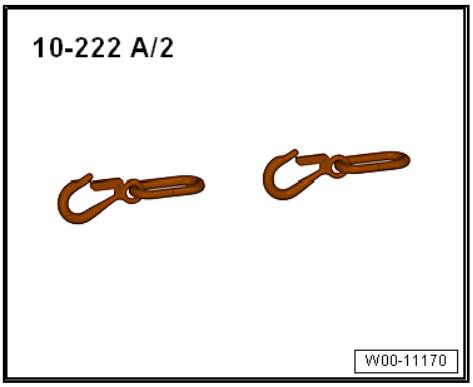

♦ Workshop hoist - VAS 6100-

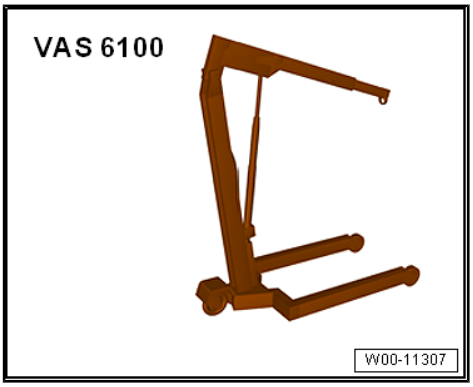

♦ Lifting tackle - T40013-

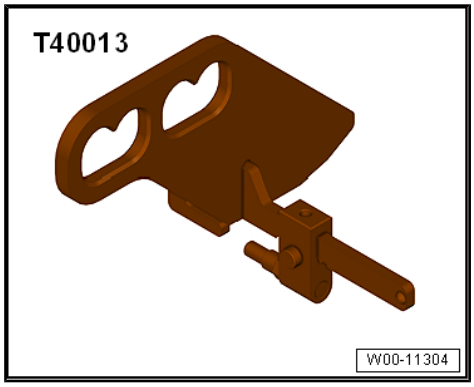

Operation process

- Engine/gearbox assembly removed and attached to engine bracket - T10359- .

– Move electrical wiring clear at bracket -arrow-.

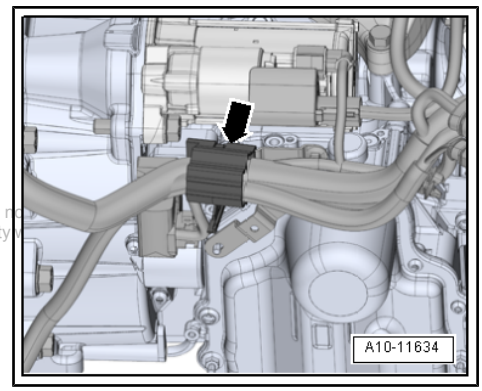

– Unscrew bolts -1 and 2- and detach starter from gearbox.

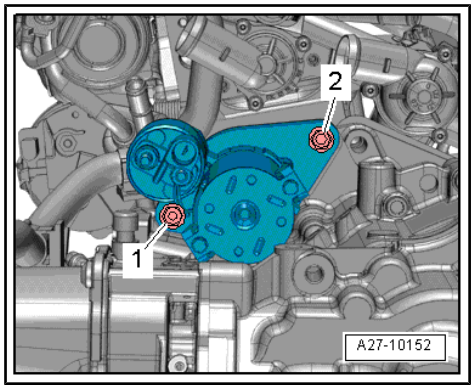

– Move electrical wiring harnesses -1, 2- clear at air pipe.
– Unfasten screw-type clip -3-.
– Unscrew bolts -arrows- and detach air pipe.

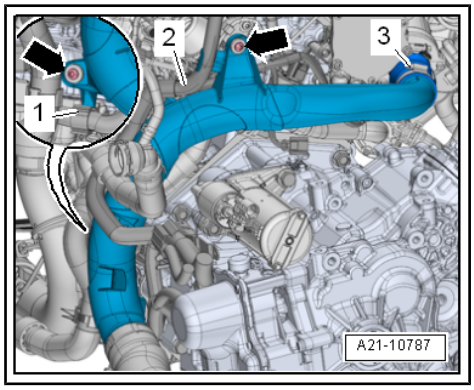

– Unscrew bolts -arrows- and detach gearbox support.

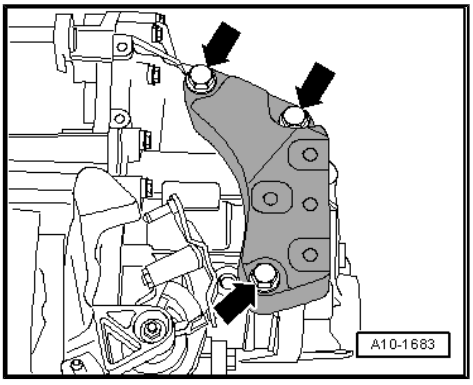

– Attach lifting tackle - T40013- to gearbox and close lock.
– Attach workshop crane - VAS 6100- with hooks - 10 - 222 A / 2- to lifting tackle.

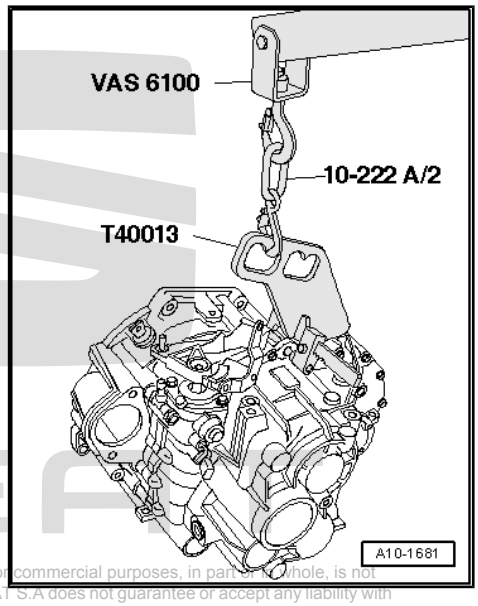

– Unscrew bolts -1, 2, 3, 6, 7, 8, 9- of the connection between gearbox and engine.

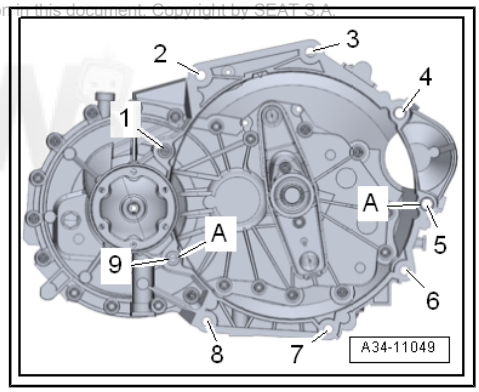

Note

Ignore -items 4, 5-and-A-.

– Detach gearbox from engine.

1.2.2 Separating engine and gearbox, vehicles with 7-speed dual clutch gearbox

Special tools and workshop equipment required

♦ Engine bung set - VAS 6122-

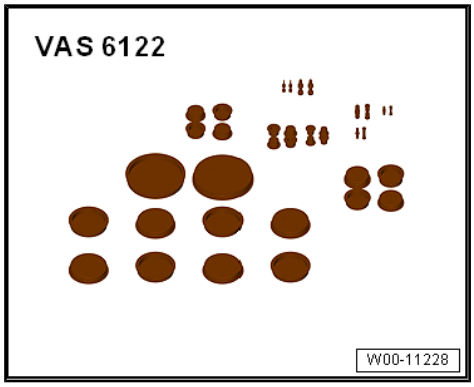

NOTICE

Secondary damage from defective needle bearing.

– **If engine and gearbox are separated, needle bearing in crankshaft must be renewed** ⇒ page 82 **.**

Working sequence

• Engine/gearbox assembly removed and attached to engine bracket - T10497- .

– Remove starter ⇒ Electrical system; Rep. gr. 27 ; Starter; Removing and installing starter ,

– Unscrew coolant pipe from gearbox.

– Unscrew nuts -arrows-, and remove bracket at front of sump.

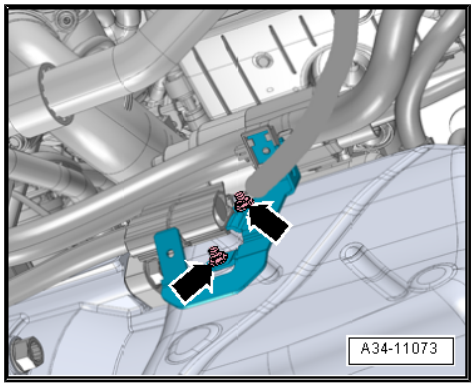

Note

The studs are welded on to the front of the oil pan.

Vehicles with four wheel drive:

– Unscrew bolts-1, 2- and remove the holders of the bevel box.

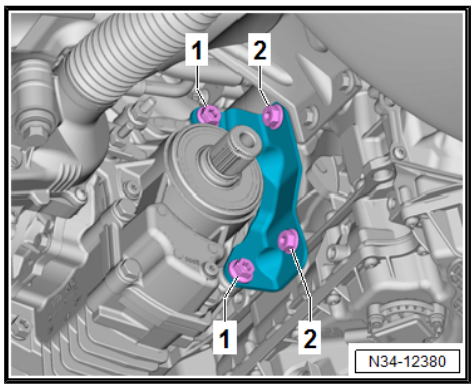

Continued for all vehicles:

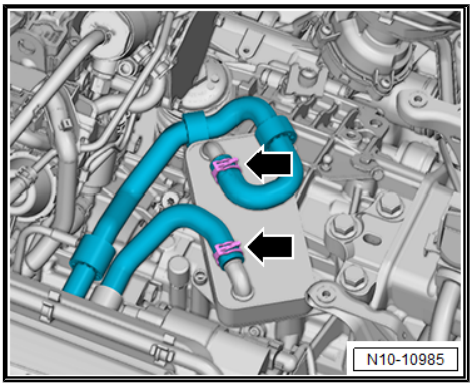

Note

Use a cloth to catch the escaping coolant.

– Loosen hose clips -arrows- and remove coolant hoses from gear oil cooler.

– Seal open lines and connections with suitable plugs from engine bung set - VAS 6122- .

– Unscrew bolts -1 to 9- securing gearbox to engine.

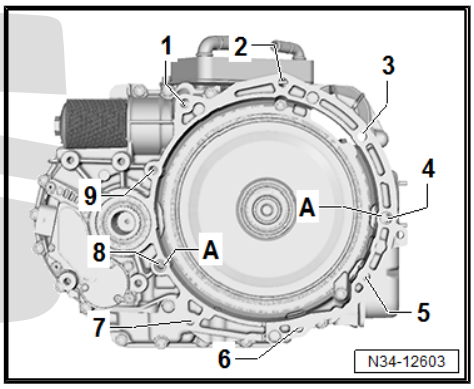

Note

Disregard -Item A-.

– Separate gearbox from engine.

– Before assembling, renew needle bearing in crankshaft ⇒ page 82 .

1.2.3 Separating engine and gearbox, vehicles with 6-speed dual clutch gearbox

Special tools and workshop equipment required

♦ Workshop hoist - VAS 6100-

♦ Adapters - 10 - 222 A /20-

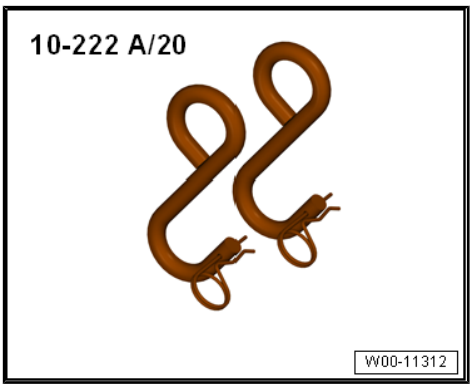

♦ Hook -2024 A /1-

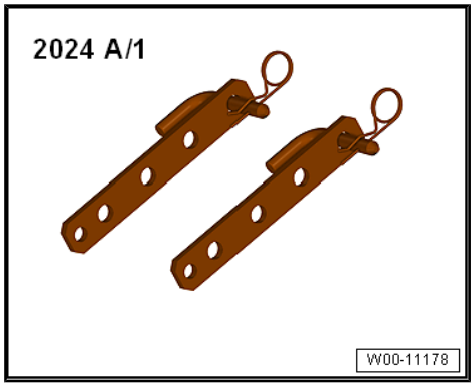

♦ Engine bung set - VAS 6122-

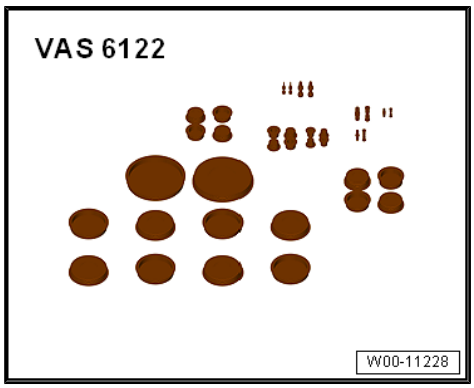

NOTICE

Secondary damage from defective needle bearing.

– **If engine and gearbox are separated, needle bearing in crankshaft must be renewed** ⇒ page 82 **.**

Operation process

- Engine/gearbox assembly removed and secured in the engine bracket - T10359-

– Remove starter ⇒ Electrical system; Rep. gr. 27 ; Starter; Removing and installing starter

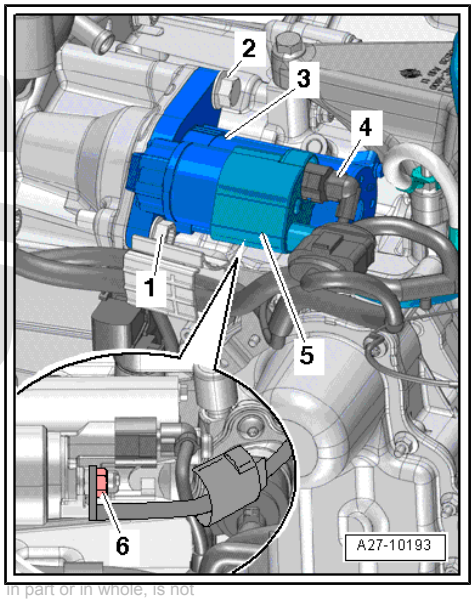

– Remove nuts -arrows- and detach bracket at front of oil pan.

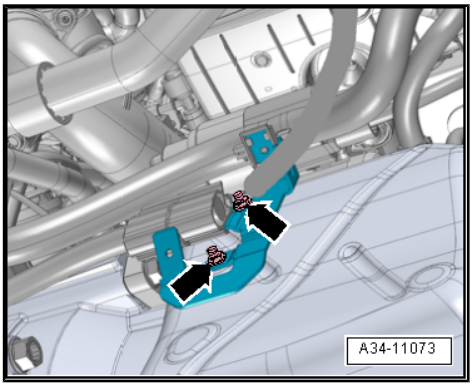

Note

The studs are welded on to the front of the oil pan.

Vehicles with four wheel drive:

– Unscrew bolts-1, 2- and remove the holders of the bevel box.

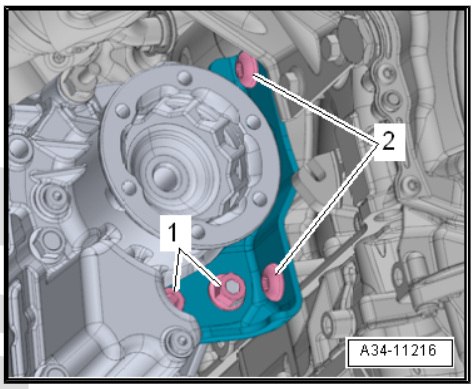

Continued for all vehicles:

– Unplug electrical connector -2-.

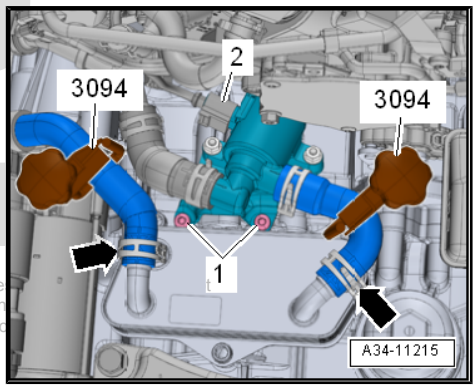

Note

Use cloth to catch escaping coolant.

– Release hose clips -arrows- and detach coolant hoses from gear oil cooler.

– Remove bolts -1- and move coolant valve for gearbox - N488- clear to one side.

– Seal off open pipes/lines and connections immediately with clean plugs from engine sealing cap set - VAS 6122- .

Note

Ignore -3094- .

– Attach hook of lifting tackle - 2024 A- to gearbox lifting eye and secure with pin -arrow-.

– Attach workshop hoist - VAS 6100- with adapter - 10 - 222 A / 20- to hooks -2024 A /1- .

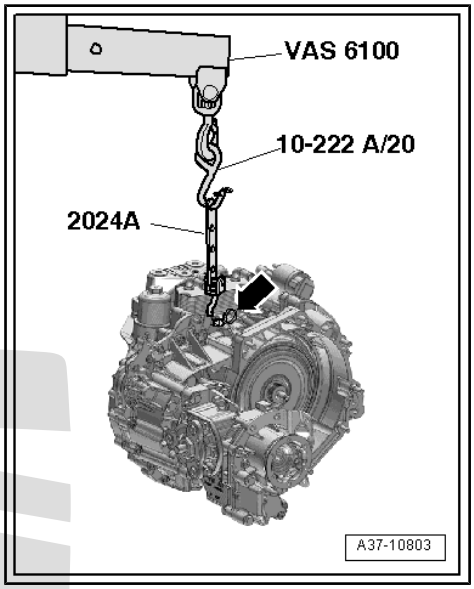

– Remove bolts -1 ... 8- securing gearbox to engine.

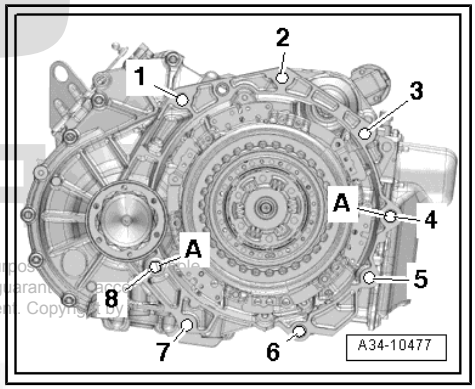

Note

Disregard -item A-.

– Detach gearbox from engine.

1.3 Separating engine and gearbox - models with automatic gearbox

Vehicles with four-wheel drive

– Remove bevel box ⇒ Rep. gr. 34 ; Bevel box; Removing bevel box .

– Remove starter ⇒ Electrical system; Rep. gr. 27 ; Starter; Removing and installing starter

All vehicles:

– Unscrew six converter nuts -arrow-.

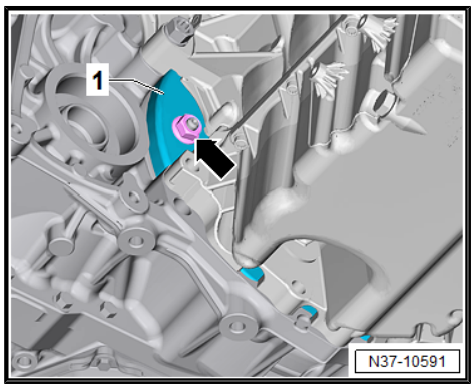

– To do this, turn engine with counterhold - T10172A- 60° for each nut in engine direction of rotation.

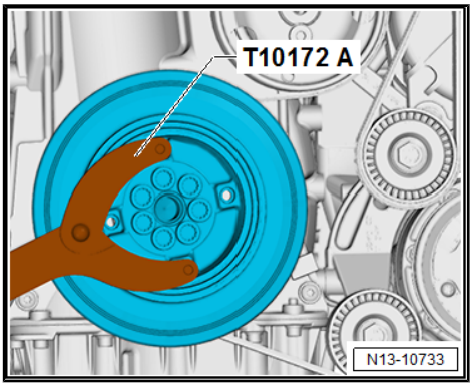

Note

If all 6 nuts are not removed from the torque converter, the torque converter will be pulled out when the gearbox is removed from the engine!

– Unscrew bolts securing sump to gearbox -arrows-.

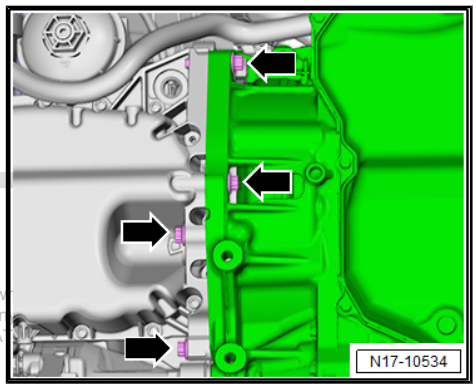

– Unscrew upper connecting bolts -arrows- securing gearbox to engine using e.g. double hexagon flex head socket.

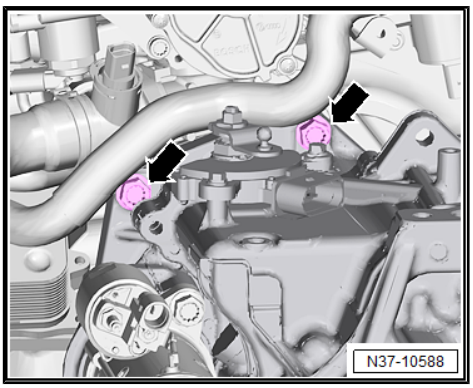

– Separate gearbox -3- from engine. At the same time, press torque converter -1- using, e.g., a screwdriver -2- against gearbox -direction of arrow-.

– After gearbox has been removed, secure torque converter to prevent it from falling out.

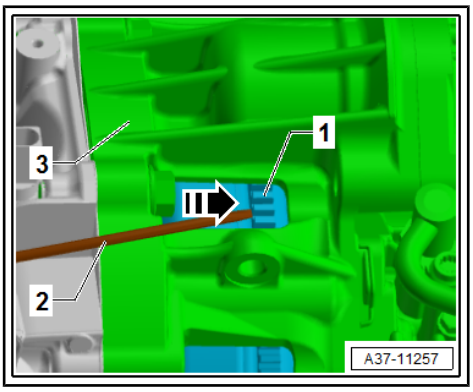

1.4 Securing engine to engine and gearbox support

Special tools and workshop equipment required

♦ Engine and gearbox support - VAS 6095-

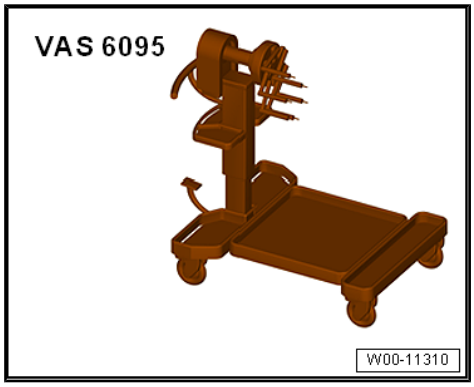

♦ Workshop hoist - VAS 6100-

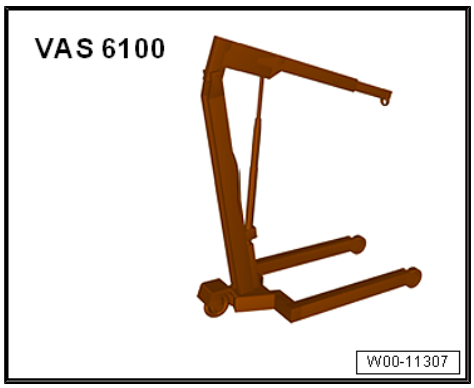

♦ Lifting tackle - 2024 A-

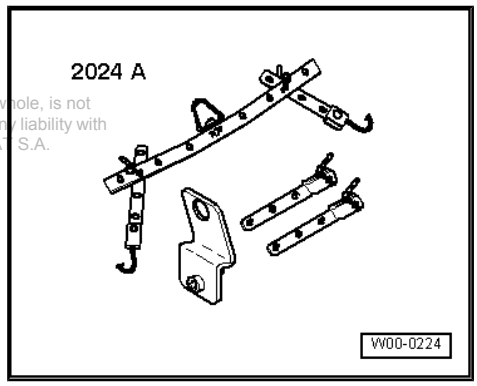

Operation process

- With the gearbox separated from the engine ⇒ page 29 .

– Release catch -arrow- and pull off mounting -1- for engine cover panel.

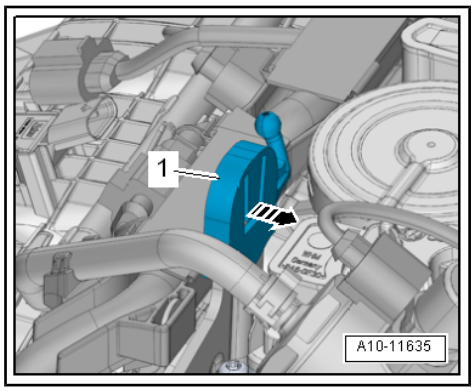

– Unclip right mounting -1- for engine cover panel.

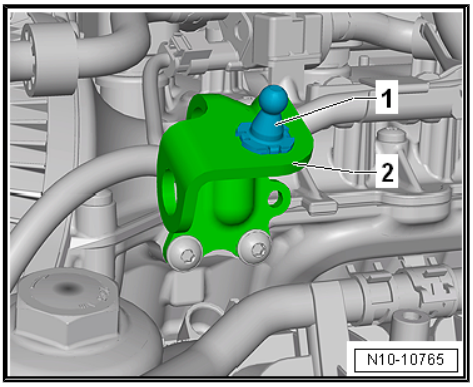

– Engage lifting tackle - 2024 A- on engine and workshop hoist - VAS 6100- .
– In order to match the lifting tackle to the centre of gravity of the engine, the holes in the hook rail must be allocated as shown in the illustration.
– The support hooks and dowel pins on the lifting tackle must be secured with locking pins -arrows-.
– Lift engine off engine and gearbox jack - VAS 6100- using workshop hoist - V.A.G 1383 A- .

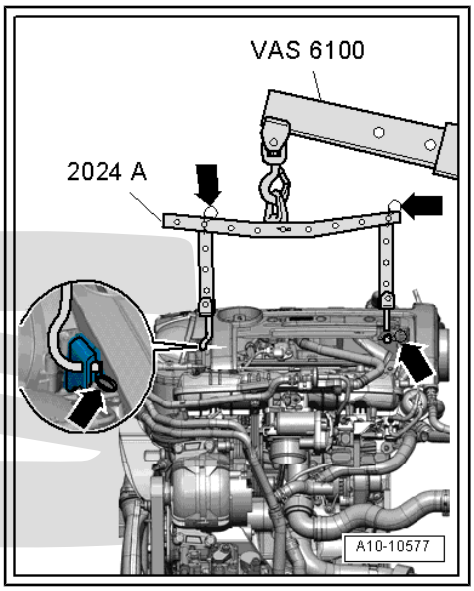

– Screw the gearbox end of the engine to the engine and gearbox support - VAS 6095- as shown in the illustration.

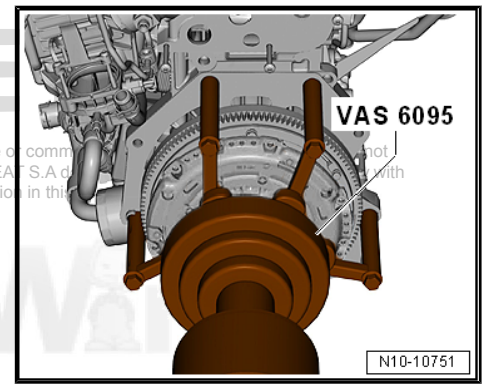

1.5 Installing engine

Specified torques

Note

- *Tightening torques apply only for lightly greased, oiled, phosphatised or blackened nuts and screws.*
- *Additional lubricants such as engine or gear oil may be used, but do not use lubricants containing graphite.*
- *All parts used must be greased.*
- *Tolerance for tightening torques: ± 15 %.*

Component		Nm
Nuts/bolts	M6	10
	M7	15
	M8	20
	M10	40
	M12	65

- Assembly mountings
  ⇒ “2.1 Installation overview - assembly mountings”, page 44 .
- Securing gearbox to engine ⇒ Rep. gr. 34 ; Removing and installing gearbox; Tightening torques for gearbox

Operation process

Note

- *Renew bolts that are tightened with turning further angle.*
- *Renew self-locking nuts and bolts as well as gaskets, seals and O-rings.*
- *Hose unions and air intake pipes/hoses must be free of oil and grease when installing.*
- *Secure all hose connections with hose clips corresponding to the series equipment ⇒ Electronic parts catalogue .*
- *Refit all cable ties at the same locations when reinstalling.*

– Check dowel sleeves for centring engine/gearbox and renew if damaged.

– Hook intermediate plate onto sealing flange and slide onto dowel sleeves -arrows-.

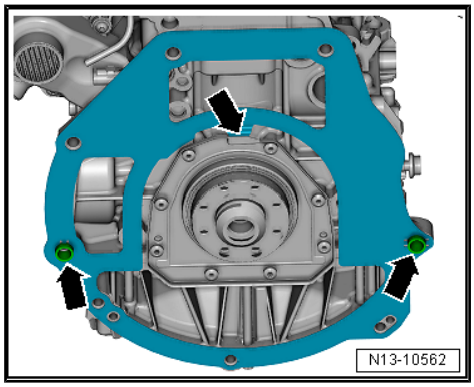

Vehicles with manual gearbox

– If clutch release bearing is worn, renew it ⇒ Rep. gr. 30 ; Clutch mechanism; Repairing clutch release mechanism .

– Lightly grease gearbox input shaft splines with grease for clutch plate splines ⇒ Electronic Parts Catalogue (ETKA) .

– Check centring of clutch plate.

– Secure gearbox to engine.

Vehicles with dual clutch gearbox

– If engine and gearbox are separated, needle bearing in crankshaft must be renewed ⇒ page 82 .

– Secure gearbox to engine.

Vehicles with all-wheel drive

– Secure gearbox to engine.

– Screw in bolts -1- and -2- securing the holder of the bevel box by hand.

– Note tightening sequence:

1 - Tighten screws -2-: 40 Nm.

2 - Tighten nuts -1-: 40 Nm.

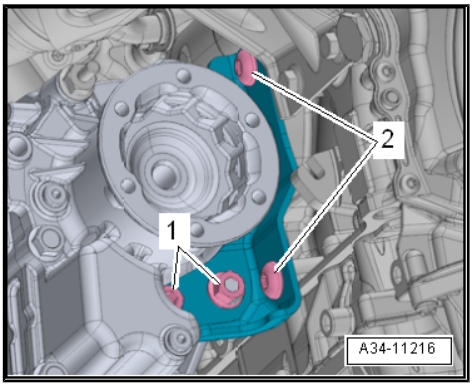

Continued for all vehicles

– Install starter ⇒ Electrical system; Rep. gr. 27 ; Starter; Removing and installing starter .

– Guide engine/gearbox assembly into body.

– Initially screw in bolts -arrows- for engine mounting by hand until they make contact.

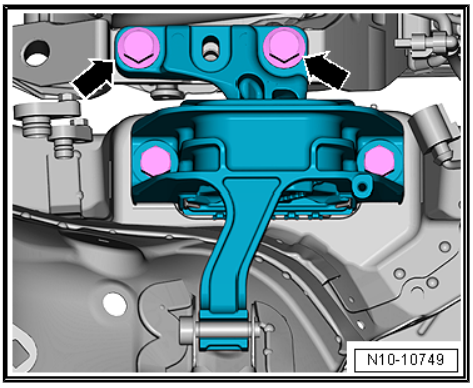

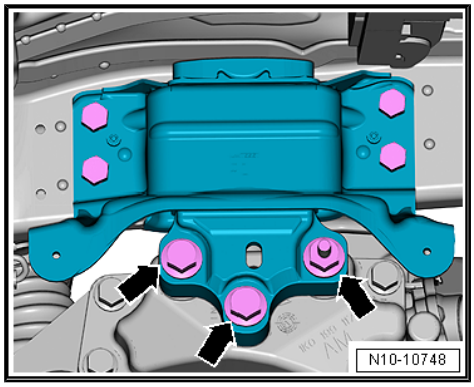

- Initially screw in bolts -arrows- for gearbox mounting by hand until they make contact.
- Adjust assembly mountings and tighten bolts ⇒ page 55 .
- Remove engine bracket - T10359- from engine.
- Install drive shafts ⇒ Running gear, axles, steering; Rep. gr. 40 ; Drive shaft; Assembly overview - drive shaft .

Vehicles with all-wheel drive

- Tighten propshaft on bevel box ⇒ rear final drive; Rep. gr. 39 ; Propshaft; ssembly overview - propshaft .

Vehicles with manual gearbox

- Install clutch slave cylinder ⇒ Rep. gr. 30 ; Clutch mechanism; Removing and installing clutch slave cylinder .
- Installing control cables with counter-hold tool ⇒ Rep. gr. 34 ; Selector mechanism; Control cables: assembly overview .

Vehicles with dual clutch gearbox

- Install and adjust selector lever cable ⇒ 7-speed dual clutch gearbox 0CW; Rep. gr. 34 ; Selector mechanism; Exploded view - Selector mechanism .
- Adjust selector lever cable ⇒ 7-speed dual clutch gearbox 0CW; Rep. gr. 34 ; Selector mechanism; Check and adjust selector lever cable .
- Install selector lever cable ⇒ 6-speed dual clutch gearbox 0D9; Rep. gr. 34 ; Selector mechanism; Exploded view - Selector mechanism .
- Adjust selector lever cable ⇒ 6-speed dual clutch gearbox 0D9; Rep. gr. 34 ; Selector mechanism; Check and adjust selector lever cable .

Continued for all vehicles

- Front exhaust pipe with catalytic converter: Assembly overview ⇒ page 414 .
- Install air conditioner compressor ⇒ Rep. gr. 87 ; Air conditioner compressor; Drive unit for air conditioner compressor: Assembly overview .
- Fit poly V-belt ⇒ page 60 .
- Install battery tray ⇒ Electrical system; Rep. gr. 27 ; Battery; Battery: assembly overview .
- Electrical connections and routing ⇒ Electrical system; Rep. gr. 97 ; Relay carriers, fuse carriers, electronics boxes; Overview of fitting locations - relay carriers, fuse carriers, electronics boxes and ⇒ Current flow diagrams, Electrical fault finding and Fitting locations.
- Install the air cleaner housing ⇒ page 356 .
- check oil level⇒ Maintenance ; Booklet 501 .
- Connect coolant hoses with plug-in connector on the heat exchanger for heater ⇒ page 292 .
- Install subframe ⇒ Running gear, axles, steering; Rep. gr. 40 ; Subframe; Removing and installing subframe without steering rack .
- Install front wheel housing liners ⇒ General body repairs, exterior; Rep. gr. 66 ; Wheel housing liner; Removing and installing front wheel housing liner .
- Check oil level.

– Replenish coolant ⇒ page 240 .

If a new base engine or short engine was installed, additional adaptations must be carried out in the engine control unit. To do this, proceed as follows:

– Connect ⇒ Vehicle diagnostic tester, and select following functions.

- `Engine control unit functions`
- `0001 - Oil pressure for entry into the engine`

and

- `Engine control unit functions`
- `0001- Basic setting`
- `0001 - Adaption diagnosis chain length`

Specified torques

- ⇒ “2.1 Installation overview - assembly mountings”, page 44
- ⇒ “2.1 Assembly overview - emission control”, page 414
- ⇒ “1.1 Exploded view - silencers”, page 391
- ⇒ “3.1 Exploded view - air cleaner housing”, page 355
- Securing gearbox to engine ⇒ Rep. gr. 34 ; Removing and installing gearbox; Tightening torques for gearbox

2 Assembly bracket

2.1 Installation overview - assembly mountings

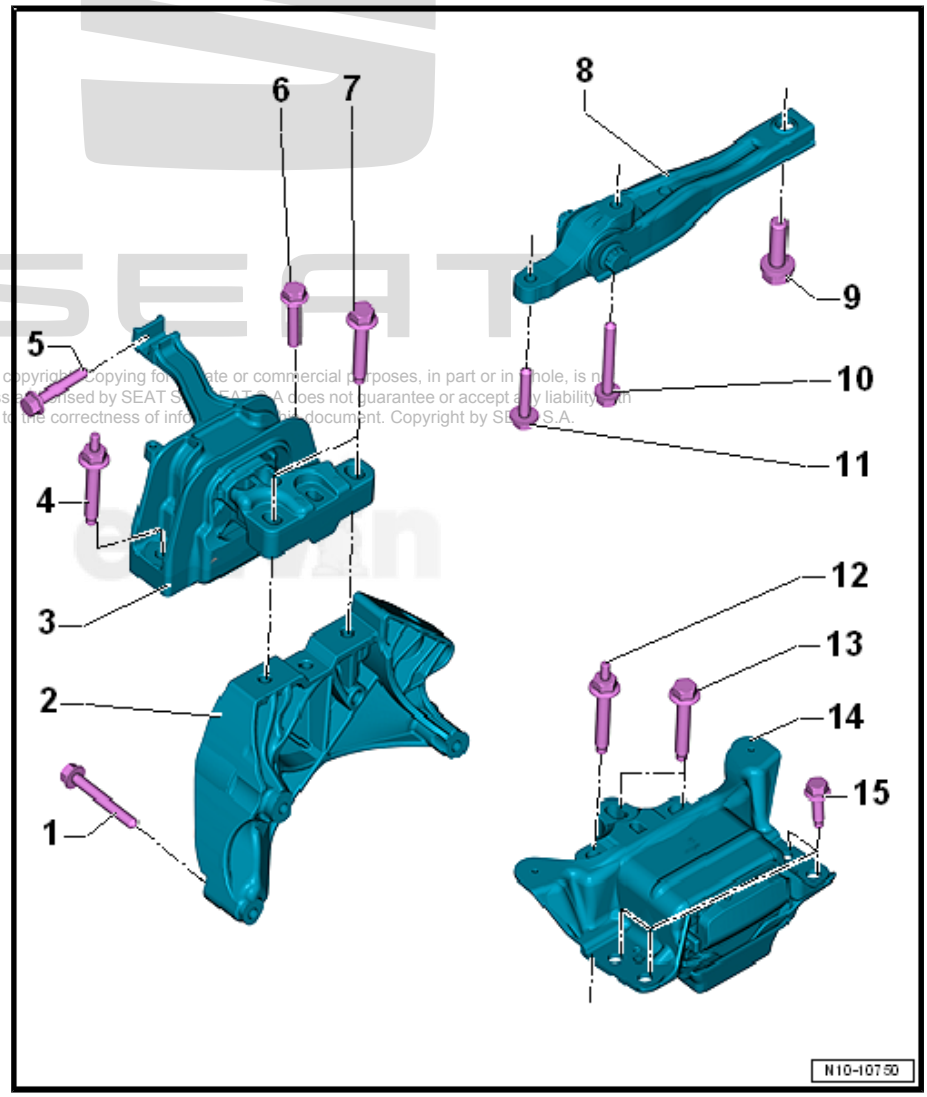

1 - Bolt
- ❑ Renew
- ❑ Tightening torque and sequence ⇒ page 70

2 - Engine support
- ❑ Removing and fitting ⇒ page 69

3 - Engine support.
- ❑ With support arm
- ❑ Removing and fitting ⇒ page 51

4 - Bolt
- ❑ Renew
- ❑ 40 Nm +90°

5 - Bolt
- ❑ Renew
- ❑ 20 Nm +90°

6 - Bolt
- ❑ Renew
- ❑ 40 Nm +90°

7 - Bolt
- ❑ Renew
- ❑ 60 Nm +90°

8 - Torque reaction support
- ❑ Removing and fitting ⇒ page 50

9 - Bolt
- ❑ Renew
- ❑ Tightening torque and sequence ⇒ page 50

10 - Bolt
- ❑ Renew
- ❑ Tightening torque and sequence ⇒ page 50

11 - Bolt
- ❑ Renew
- ❑ Tightening torque and sequence ⇒ page 50

12 - Bolt

- ❑ Renew
- ❑ 60 Nm +90°

13 - Bolt

- ❑ Renew
- ❑ 60 Nm +90°

14 - Gearbox mounting

- ❑ With support arm
- ❑ Removing and fitting ⇒ page 47

15 - Bolt

- ❑ Renew
- ❑ 50 Nm +90°

2.2 Removing and installing engine mountings

Special tools and workshop equipment required

- ♦ Torque wrenches - V.A.G 1331-

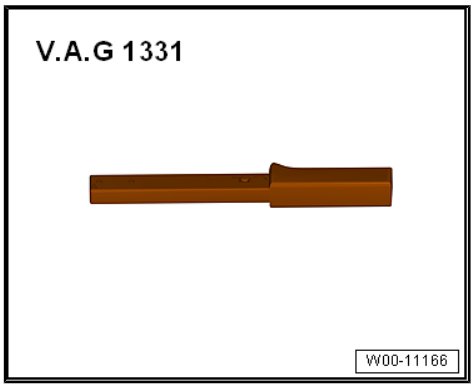

- ♦ Torque wrenches - V.A.G 1332-

Removing

– Remove engine cover panel ⇒ page 57 .

– Unclip right mounting -1- for engine cover panel from retainer -2-.

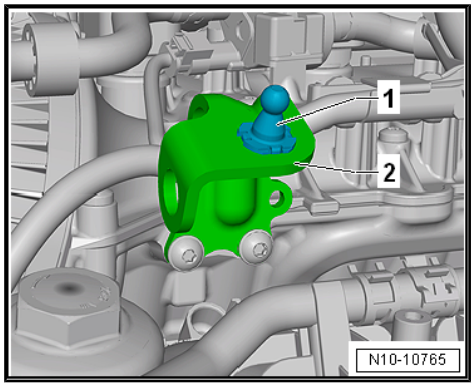

Vehicles with windscreen washer tank, right side

– Remove windscreen washer tank filler -2- ⇒ Electrical system; Rep. gr. 92 ; Windscreen washer system; Removing and installing tank for windscreen washer system .

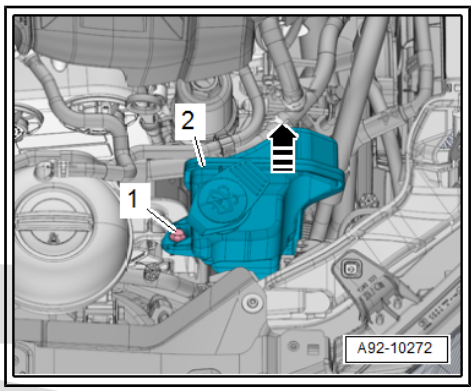

Continued for all vehicles

– Disconnect electrical connector -1-.

– Free hoses -2- from fittings and lay them to one side.

– Release catches in direction of -arrow- with a screwdriver and move coolant expansion tank to one side.

– Bracing the engine in its installation position ⇒ page 51

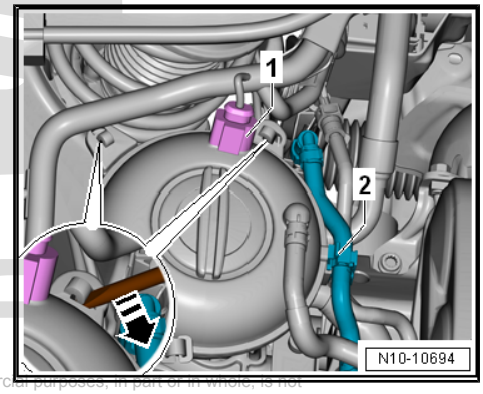

– Remove bolts -arrows- and detach engine mounting -1-.

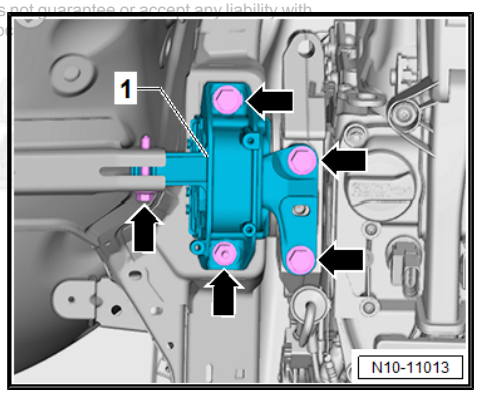

Installation

Install in the reverse order of removal, observing the following:

Note

- *Renew the bolts tightened with specified tightening angle.*
- *The engine and gearbox mounting must be set optimally in order to avoid vibrations.*

– Check adjustment of assembly mountings (engine/gearbox mountings) ⇒ page 56 .

Specified torques

- ⇒ “2.1 Installation overview - assembly mountings”, page 44

2.3 Removing and installing gearbox mounting

Special tools and workshop equipment required

- Torque wrenches - V.A.G 1331-

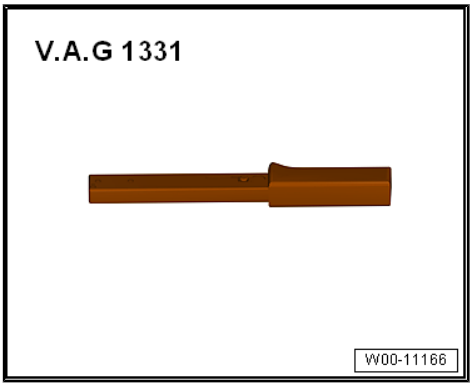

- Torque wrenches - V.A.G 1332-

- Engine support - T50015A-

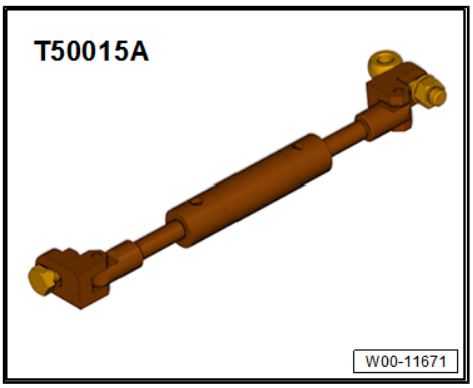

- Supports of the positioner - T10533/2-
- Bolt M12 x 20 mm of the positioner - T10533/4-

Removing

Vehicles with all-wheel drive

– Remove noise insulation ⇒ General body repairs, exterior; Rep. gr. 66 ; Noise insulation; Assembly overview - noise insulation .

– Remove pendulum support ⇒ page 50 .

Note

- *In order to prevent the backwards movement of the engine/ gearbox module when removing from one of the two support tools, the engine support - T50015A- must be used as described in the following. This way, the engine/gearbox module is partially held in its original position and the manual unscrewing of the screws of the support tools and the setting and the tightening are alleviated.*
- *Only attach with low tension, as otherwise there is a danger of damaging the propshaft.*
- *The engine and gearbox mounting must be set optimally in order to avoid vibrations.*

– Connect the engine support - T50015A- -2- as shown in the diagram.

- Screw a bolt M8 x 30 mm -1- with a washer into the threaded hole of the subframe.
- Attach engine support - T50015A- -2- to support plate of positioner - T10533/2- -4-.
- Fasten engine support - T50015A- assembly kit -2- and support plate of positioner - T10533/2- -4- to the threaded hole of the gearbox using bolt M12 x 20 mm of positioner - T10533/4- -5-.

– By turning the spindle, the engine/gearbox unit is moved forwards until there is a small tension. Avoid collisions of components.

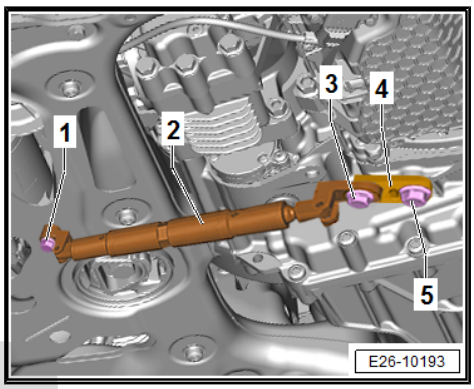

Continued for all vehicles

– Remove battery tray ⇒ Electrical system; Rep. gr. 27 ; Battery; Removing and installing battery tray .

– Support engine and gearbox in installation position ⇒ page 51 .

– Remove the engine control unit - J623- from the bracket ⇒ page 376 .

– Remove nuts -arrows- and detach bracket -1-.

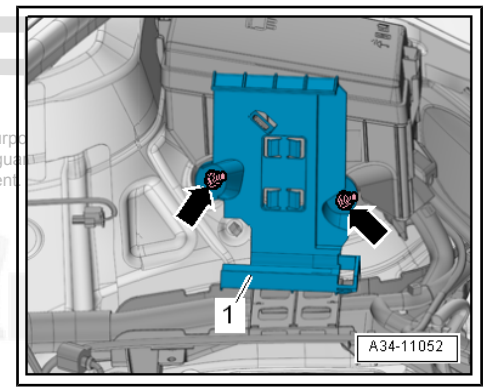

Note

Different types of brackets are fitted depending on version.

– Unclip wire guide -1- upwards -arrows- and push slightly to one side.

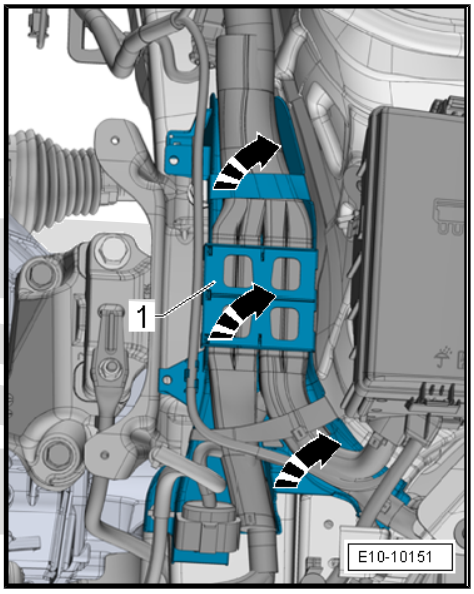

– Depending on version, unscrew and remove nut -Arrow- and expose the earth wire.

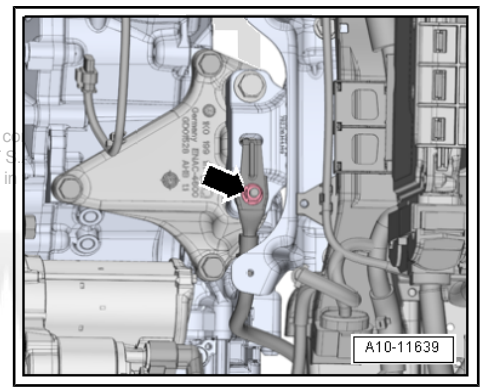

– Unscrew bolts -2-. Then unscrew bolts -arrows-, and remove gearbox mounting -1-.

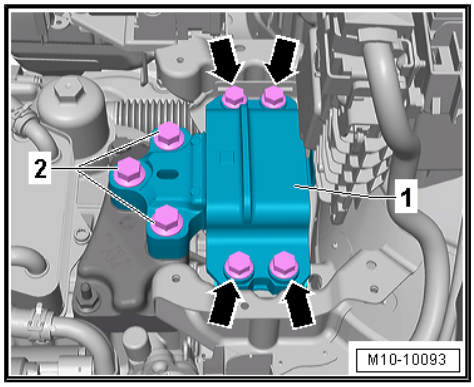

Fitting

Install in the reverse order of removal, observing the following:

Note

- *Replace bolts that are tightened with specified tightening angle.*
- *Gearbox support and support arm of gearbox mounting must be perfectly parallel to each other before screwing in bolts. If necessary, lift gearbox at rear using trolley jack.*

– Tighten gearbox mounting on longitudinal member.

– Pull gearbox up with spindle on support bracket until gearbox support contacts support arm of gearbox mounting.

– Assembly mountings: check setting ⇒ page 56 .

– Remove the gearbox support - 10 - 222 A- from the engine.

Specified torques

- ⇒ “2.1 Installation overview - assembly mountings”, page 44
- ⇒ Electrical system; Rep. gr. 27 ; Battery; Assembly overview - battery
- ⇒ General body repairs, exterior; Rep. gr. 50 ; Plenum chamber partition panel; remove and install plenum chamber cover

2.4 Removing and installing pendulum support

Special tools and workshop equipment required

- Torque wrenches - V.A.G 1331-

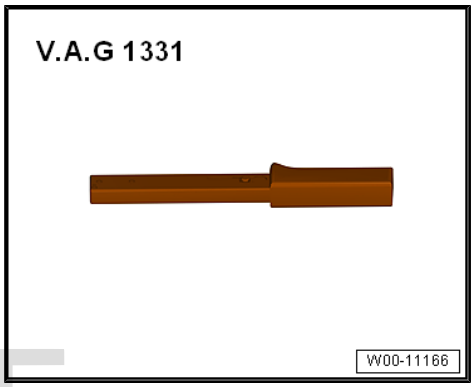

- Torque wrenches - V.A.G 1332-

Removing

– Remove noise insulation ⇒ General body repairs, exterior; Rep. gr. 66 ; Noise insulation; Assembly overview - noise insulation .

– Remove bolts -1, 2, 3- and detach pendulum support.

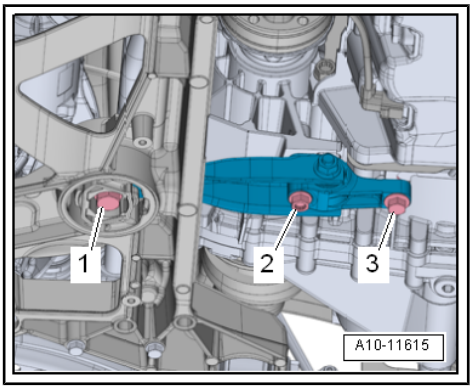

Fitting

Install in the reverse order of removal, observing the following:

Specified torques

Stage	Bolts	Specified torque/turning further angle
1.	-2 and 3-	50 Nm
2.	-1-	130 Nm
3.	-1 - 3-	Turn 90° further

♦ ⇒ General body repairs, exterior; Rep. gr. 66 ; Noise insulation; Assembly overview - noise insulation

2.5 Supporting engine in installation position

Special tools and workshop equipment required

♦ Support tool - 10 - 222 A-

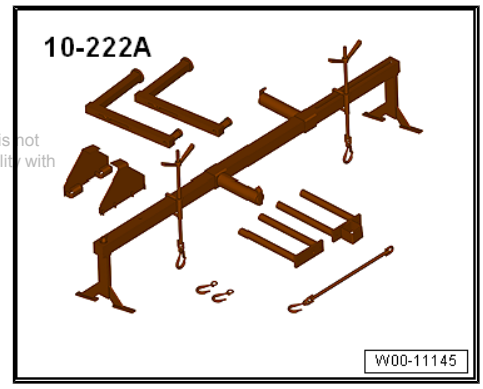

♦ Adapter - 10 222A/29-

- Hook - 10 222A/10-

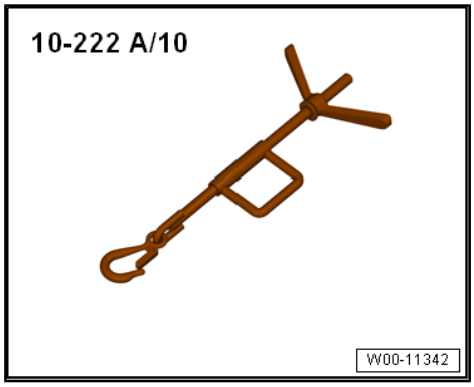

- Adapter - 10 - 222 A /18-

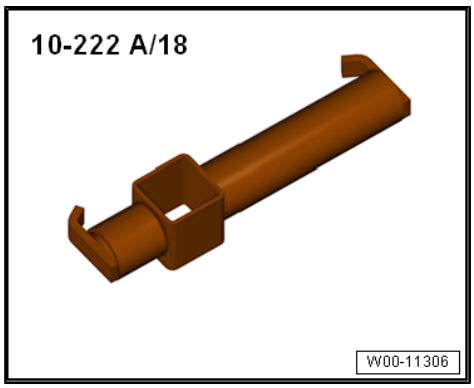

- Engine support basic set - T40091-

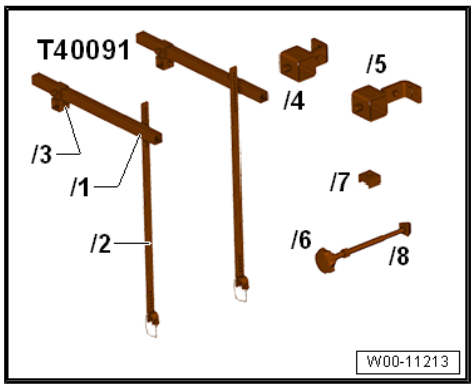

- -T40093/6- from engine support supplement set - T40093-

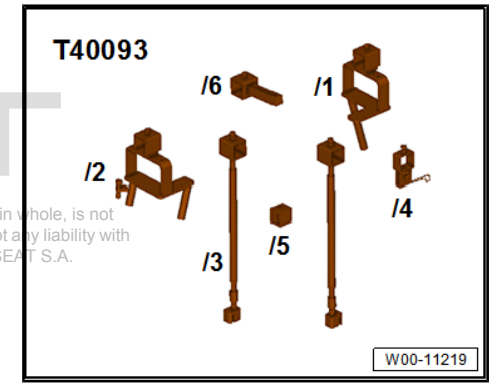

-

♦ Adapter - T40093/3-6A-

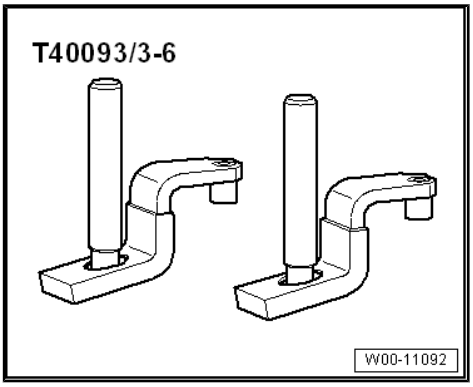

Check adapter - 10 - 222 A /4- and convert if necessary.

– If adapter -10 - 222 A- does not yet have hole (marked with -arrow-), hole must now be drilled into adapter.

• Dimension -a- = 225 mm

• Drill ∅: 12.5 mm.

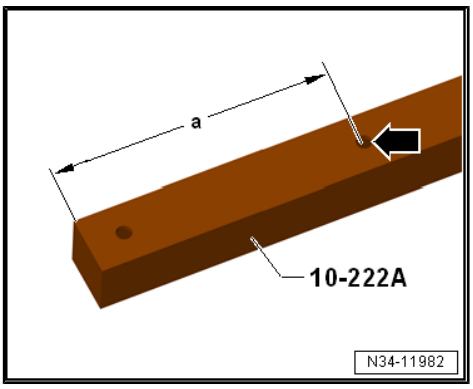

Operation process

– Remove engine cover panel ⇒ page 57 .

– Release catch -arrow- and pull off mounting -1- for engine cover panel.

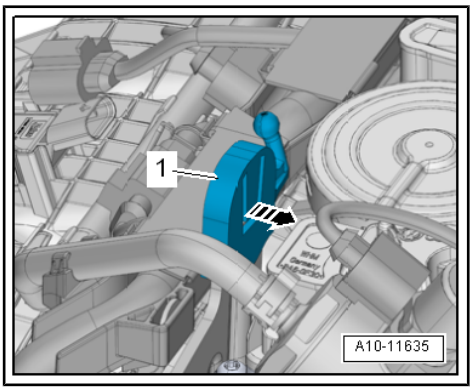

– Unhook right mounting -1- for engine cover panel from retainer -2-.

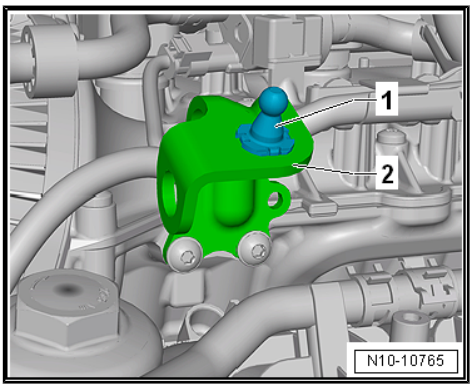

– On both sides of vehicle, insert adapters - 10 - 222 A /29- between upper wheel housing longitudinal member and mounting plate for wing located underneath.

• Installation position:

Attach the “L” adapter to the “right” vehicle side (adapter clicks into place in the wiring recess, observing the height -arrow-)

Attach the “R” adapter to the “left” vehicle side (adapter -1- clicks into place in the wiring recess, observing the height -arrow-)

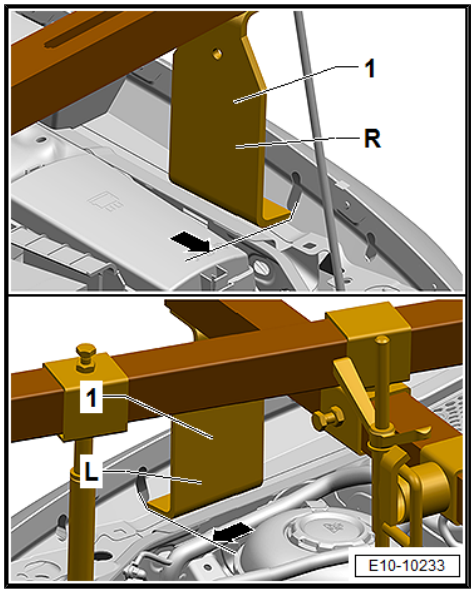

– Insert spindle - 10 - 222 A /10- -5-, adapter - 10 - 222 A /18- -3- and adapter - T40091/3- -2- into the support bracket - 10 - 222 A- -4-.

– Screw on support bracket - 10-222 A- -4- to adapters - 10 - 222 A /29- -1-.

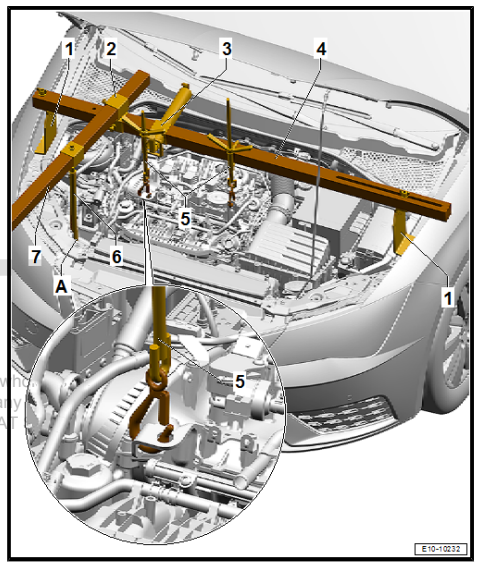

– If fitted, pull off electrical wiring in front area of web on both longitudinal members -arrow-. Do not disconnect pipe/hose system.

– Place the adapter - T40093/3-6- over the bottom right longitudinal member.

– Bolt -A- must stay behind the edge -arrow-.

– If necessary, carefully clip off any pipes in the front area for the air conditioning system. Do not disconnect pipe/hose system ⇒ Heating, air conditioning; Rep. gr. 87 ; Refrigerant circuit; System overview - refrigerant circuit .

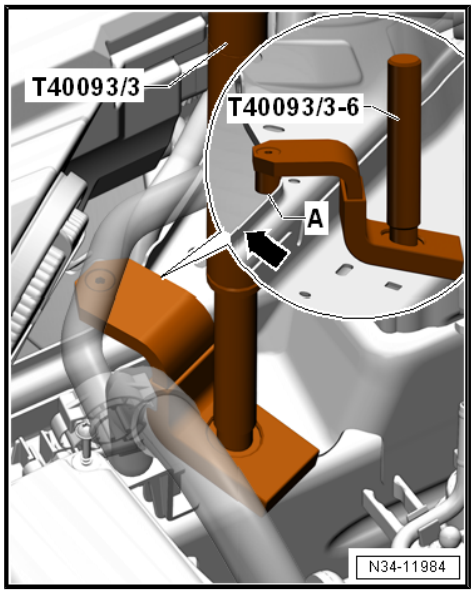

– Screw the spindle of the engine support supplement set - T40093 /3- -6- to the adapter - T40093/3-6- -A-.

– Connect, fit and tighten the spindle engine support supplement set - T40093 /3- -6- to the adapter - T40091/3- -2- over the square section tube - T40091/1- -7-.

– Hook the karabiners on the spindles - 10 - 222 A /10- -5- into the engine lifting eyes.

– Take up weight of engine/gearbox assembly with spindles, but without raising it.

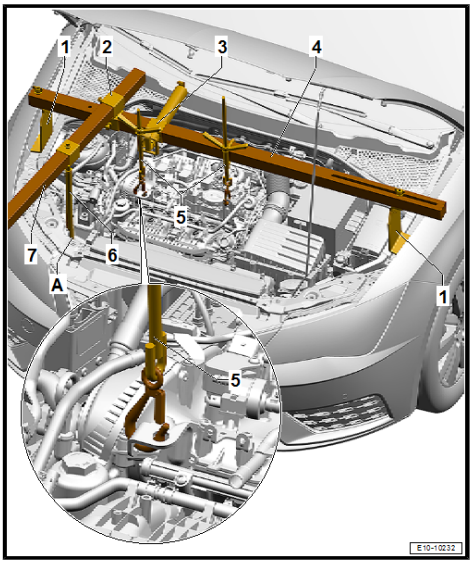

2.6 Adjusting assembly mounting

Sequence of operations

– Remove battery tray ⇒ Electrical system; Rep. gr. 27 ; Battery; Removing and installing battery tray .

– Support engine and gearbox in installation position ⇒ page 51 .

– Unscrew engine mounting bolts -arrows- one after the other and renew them (if not already renewed when installing engine).

– First screw bolts in loosely.

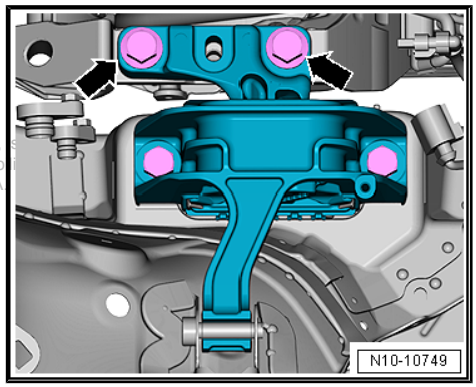

– Using assembly lever, adjust engine/gearbox assembly so that specifications listed below are attained:

- There must be a distance of -a- = 10 mm between engine support -2- and engine mounting -1-.
- Side surface of the engine support casting should be located parallel to support arm of engine mounting.
- Distance -b- = distance -b-.

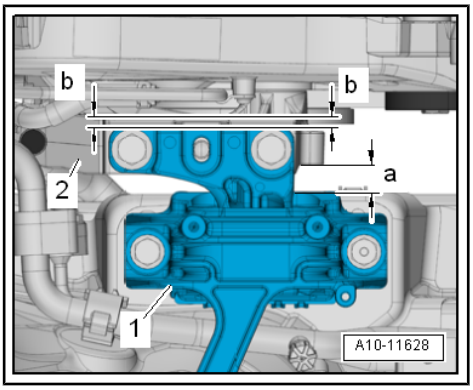

Note

Distance -a- = 10 mm can be checked with a metal rod of suitable size, or similar.

– Tighten bolts of engine mounting.

– Unscrew gearbox mounting bolts -arrows- one after the other and renew them (if not already renewed when installing engine).

– First screw bolts in loosely.

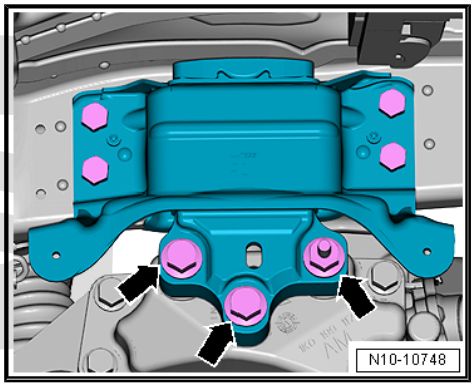

– On gearbox side, ensure that support arm and gearbox mounting are parallel.

• Dimension -x- = dimension -x-.

– Tighten bolts for gearbox mounting.

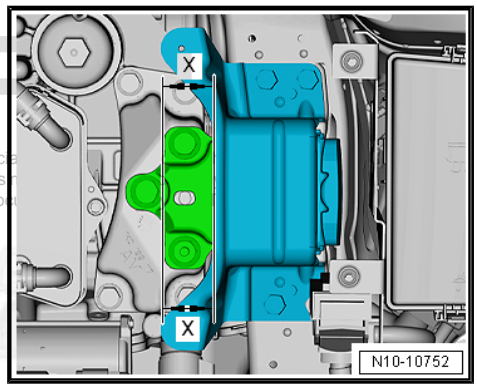

Specified torques

♦ ⇒ “2.1 Installation overview - assembly mountings”, page 44

♦ ⇒ Electrical system; Rep. gr. 27 ; Battery; Battery - Exploded view

2.7 Checking adjustment of assembly mountings

Operation process

The following dimensions must be reached:

• There must be a distance of -a- = 10 mm between engine support -2- and engine mounting -1-.

• Side surface of engine support casting should be located parallel to support arm of engine mounting.

• Distance -b- = distance -b-.

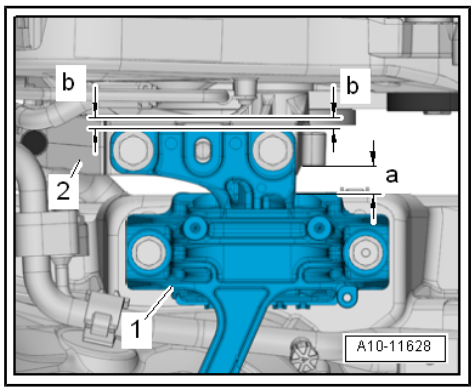

Note

For example, distance -a- = 10 mm can be checked with a metal rod of suitable size.

– If the distance measured is too large or small, the assembly mountings must be adjusted ⇒ page 55 .

3 Engine cover

⇒ “3.1 Removing and installing engine cover panel”, page 57

3.1 Removing and installing engine cover panel

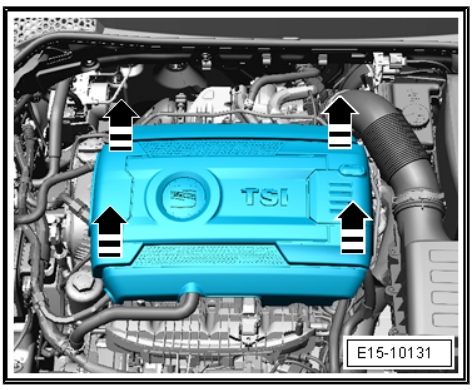

Removing

– Carefully pull engine cover panel off retaining pins, one after the other in the -direction of the arrow-. Do not jerk engine cover panel away, and do not try to pull on one side only.

Fitting

– To avoid damage, do not strike the engine cover panel with your fist or with any kind of tool.

– Position engine cover panel, paying attention to oil filler neck and dipstick.

– Press engine cover panel into rubber grommets first on the left side and then on the right side.

13 – Crankshaft group

1 Cylinder block (pulley end)

1.1 Exploded view - cylinder block (pulley end)

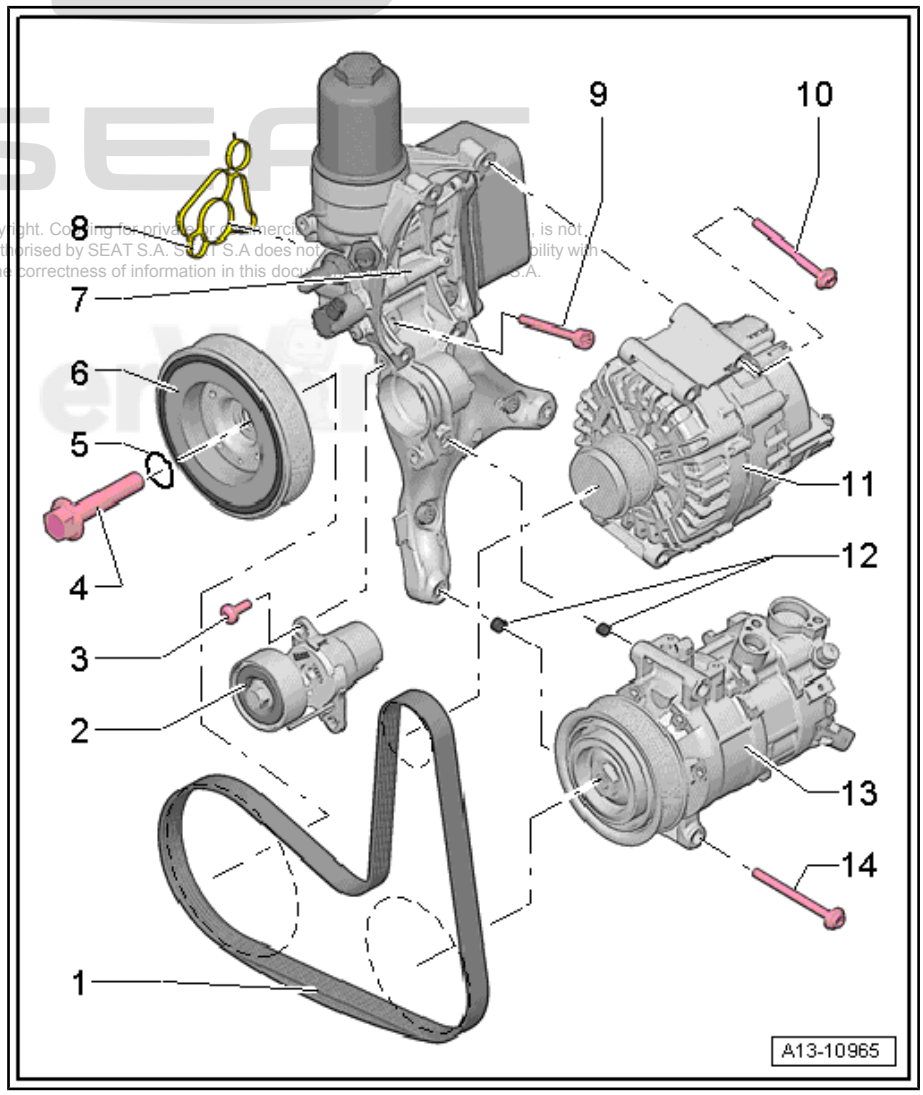

1 - Poly V-belt

- ❑ Check for wear
- ❑ Do not kink.
- ❑ Routing of poly V-belt ⇒ page 60
- ❑ Removing and fitting ⇒ page 60
- ❑ When installing, make sure it is properly seated on pulleys.

2 - Tensioning device for V-ribbed belt

- ❑ Pivot with open-end spanner to slacken poly V-belt
- ❑ Lock with locking pin - T10060 A-
- ❑ Removing and fitting ⇒ page 61
- ❑ Specified torque for tensioning roller to tensioner: 60 Nm

3 - Bolt

- ❑ Renew after removing
- ❑ 8 Nm +45°

4 - Bolt

- ❑ Must be renewed if removed
- ❑ Moisten O-ring with oil.
- ❑ Use counterholder - T10355- to loosen and tighten
- ❑ 150 Nm +90°

5 - O-ring

- ❑ Not available as replacement part; supplied together with bolt

6 - Vibration damper

- ❑ With poly V-belt pulley
- ❑ Removing and fitting ⇒ page 61
- ❑ Crankshaft oil seal (pulley side): replacement ⇒ page 70

7 - Bracket for ancillary mechanical units

- ❑ With oil filter and engine oil cooler
- ❑ Removing and fitting ⇒ page 67
- ❑ Removing and installing engine oil cooler ⇒ page 216 .

8 - Gasket

- ❑ Renew

9 - Bolt

- ❑ Must be renewed if removed
- ❑ Tightening torque and sequence ⇒ page 59

10 - Bolt

- ❑ Tightening torque ⇒ Electrical system; Rep. gr. 27 ; Alternator; Alternator: Exploded view

11 - Alternator:

- ❑ Exploded view ⇒ Electrical system; Rep. gr. 27 ; Alternator; Alternator: Exploded view

12 - Dowel sleeves

- ❑ For air conditioner compressor

13 - Air conditioner compressor

- ❑ Do not unscrew or disconnect the refrigerant hoses or pipes
- ❑ Exploded view ⇒ Rep. gr. 87 ; Air conditioner compressor; Exploded view - air conditioner compressor drive unit

14 - Bolt

- ❑ Tightening torque ⇒ Rep. gr. 87 ; Air conditioner compressor; Exploded view - air conditioner compressor drive unit

Bracket for ancillaries - tightening torque and tightening sequence

– Fit bracket for ancillaries (first tighten bolt -4- by hand).

Note

Always renew bolts that are tightened with specified tightening angle.

– Tighten bolts in sequence -1 … 5- in 3 stages as follows:

Stage	Bolts	Specified torques/turning further angle
1.	-1 to 5-	Screw in by hand as far as stop
2.	-1 to 5-	20 Nm
3	-1 to 5-	Turn 90° further

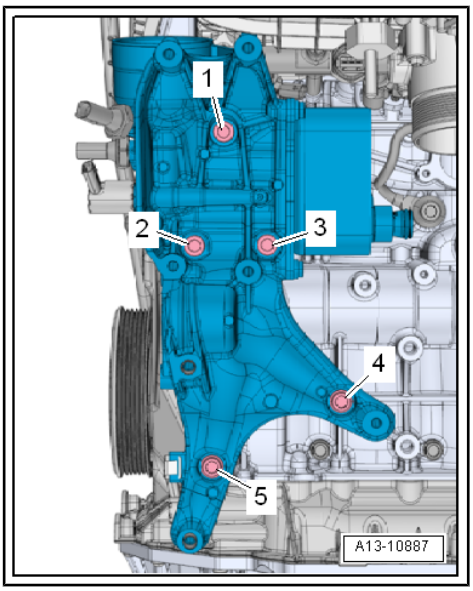

Poly-V belt routing

1 - Vibration damper

2 - Tensioning device for V-ribbed belt

3 - Alternator:

4 - Air conditioner compressor

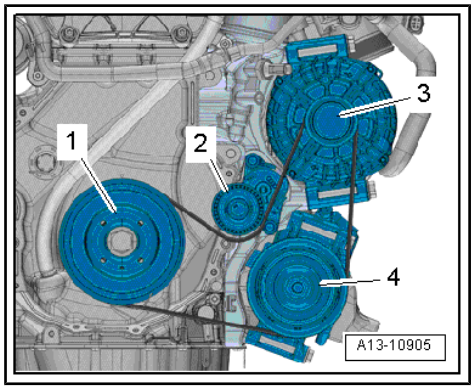

1.2 Removing and installing poly V-belt

Special tools and workshop equipment required

♦ Locking pin - T10060 A-

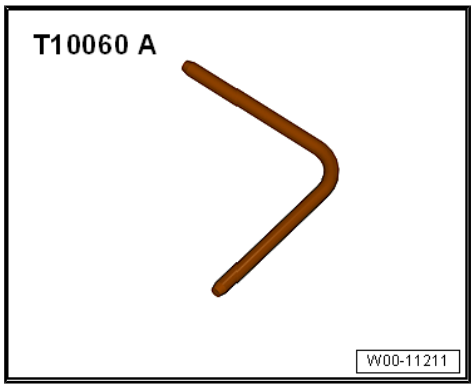

Removing

– If poly V-belt is to be reinstalled, mark direction of rotation on belt using chalk or felt tip pen before removing.

– To slacken poly V-belt turn tensioning device in direction of -arrow-. To do so, fit tool from “above”.

– Lock tensioner in place with locking pin - T10060 A- .

– Remove the V-ribbed belt.

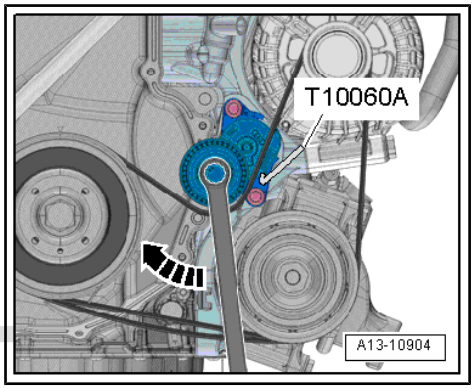

Vehicles with washer fluid reservoir on right

– Remove noise insulation ⇒ General body repairs, exterior; Rep. gr. 66 ; Noise insulation; Assembly overview - noise insulation .

– Remove washer fluid reservoir ⇒ Electrical system; Rep. gr. 92 ; Windscreen wiper system; Removing and installing washer fluid reservoir .

– If poly V-belt is to be reinstalled, mark direction of rotation on belt using chalk or felt tip pen before removing.

– To slacken poly V-belt turn tensioner in direction of -arrow-.

– Lock tensioner with locking pin - T10060 A- .

– Remove the V-ribbed belt.

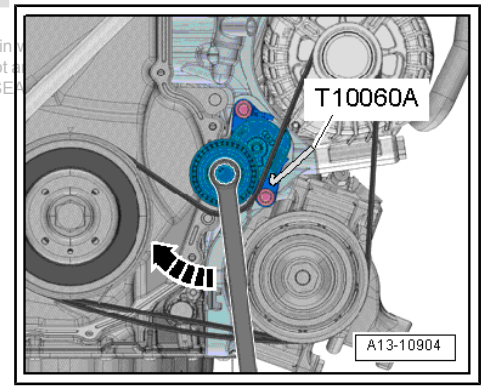

Fitting

Installation is carried out in the reverse order; note the following:

– Fit poly V-belt as shown in illustration.

1 - Vibration damper

2 - Tensioning device for V-ribbed belt

3 - Alternator:

4 - Air conditioner compressor

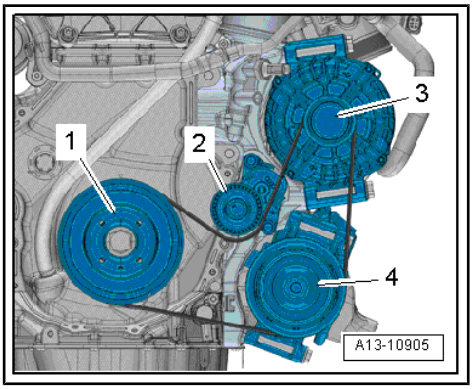

– Turn tensioner in direction of -arrow- and remove locking pin - T10060 A- .

– Release the tension devices.

– Check that poly V-belt is properly seated.

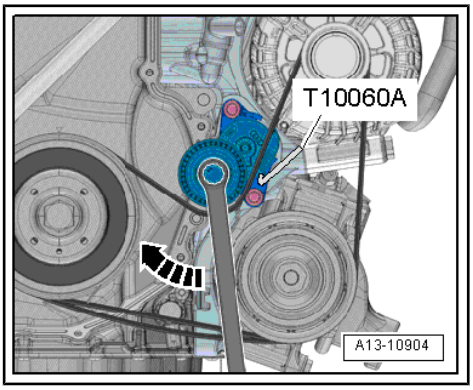

Vehicles with washer fluid reservoir on right

– Install windscreen washer tank ⇒ Electrical system; Rep. gr. 92 ; Windscreen washer system; Removing and installing tank for windscreen washer system .

– Start engine and check that poly V-belt runs properly.

Specified torques

♦ ⇒ Electrical system; Rep. gr. 92 ; Windscreen washer system; Assembly overview - windscreen washer system

♦ ⇒ General body repairs, exterior; Rep. gr. 66 ; Noise insulation; Assembly overview - noise insulation

1.3 Removing and installing tensioner for poly V-belt

Removing

– Detach poly V-belt from tensioner
⇒ “1.2 Removing and installing poly V-belt”, page 60 .

– Remove bolts -arrows- and take off tensioner -1- for poly-V-belt from bracket for ancillaries.

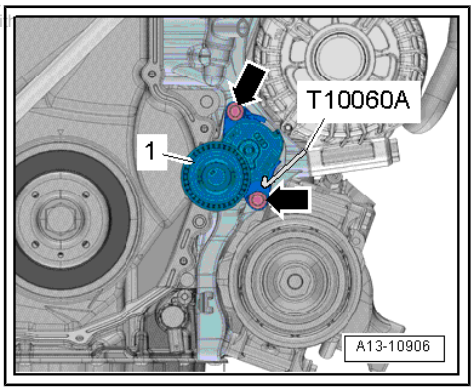

Fitting

Install in the reverse order of removal, observing the following:

– Fit poly V-belt ⇒ page 60 .

– Install the windscreen washer tank filler ⇒ Electrical system; Rep. gr. 92 ; Windscreen washer system; Removing and installing windscreen washer tank .

Specified torques

♦ ⇒ “1.1 Exploded view - cylinder block (pulley end)”, page 58

♦ ⇒ Electrical system; Rep. gr. 92 ; Windscreen washer system; Assembly overview - windscreen washer system

♦ ⇒ General body repairs, exterior; Rep. gr. 66 ; Noise insulation; Assembly overview - noise insulation

1.4 Removing and installing vibration damper

Special tools and workshop equipment required

- Counterhold - T10355-

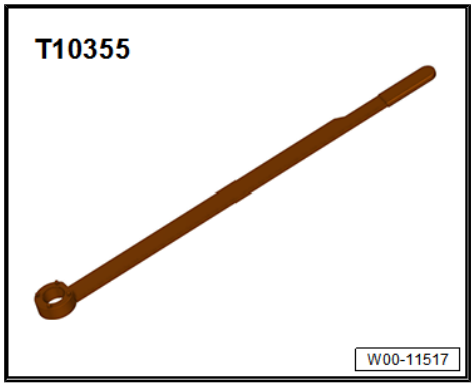

- Assembly tool - T10531-

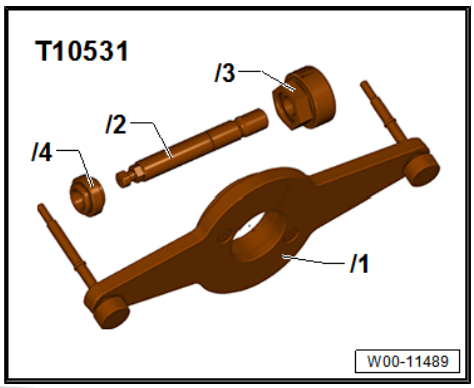

Components of assembly tool - T10531- :

- Retainer - T10531/1-
- Cotter pin - T10531/2-
- Turning over tool - T10531/3-
- Flange nut - T10531/4-

Note

The vibration damper securing bolt -A- is used to secure the vibration damper -1- and the timing chain sprocket -2- on crankshaft -3-. Before unscrewing the securing bolt, lock the timing chain sprocket in position relative to crankshaft as described below:

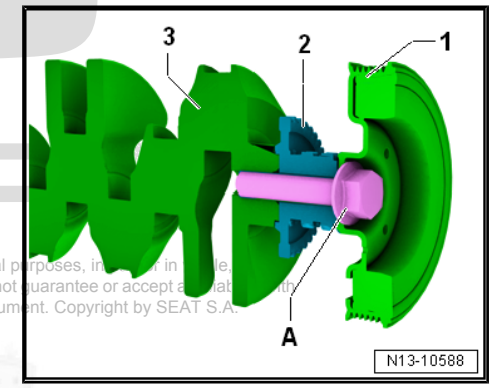

Removing

– Remove wheel housing liner (front right) ⇒ General body repairs, exterior; Rep. gr. 66 ; Wheel housing liners; Exploded view - wheel housing liner (front) .

– Remove the poly V-belt ⇒ page 60 .

– Pull locking pin - T10060 A- out of tensioning device for poly V-belt.

– Turn vibration damper to TDC position -arrow- using counter-hold tool - T10355- .

• The notch on the vibration damper must oppose the arrow marking on the lower cover of the timing chains.

• The marking on the cover is located at »4 o'clock position«.

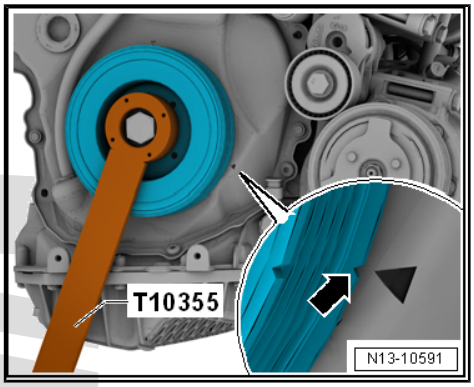

– Unscrew the bolt for the vibration damper approx. $^1/_2$ turn using the counter-hold tool - T10355- .

– If vibration damper was turned while loosening bolt, reset TDC position.

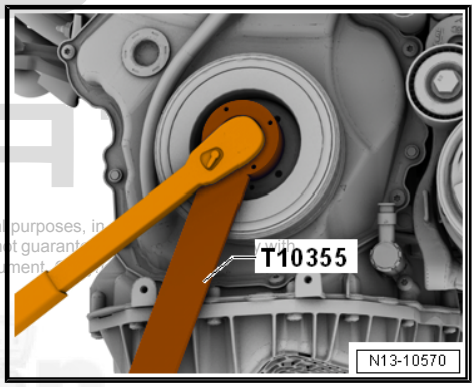

– Unscrew the 2 timing chain cover securing bolts -arrows-, as shown in illustration. Bolts must be replaced.

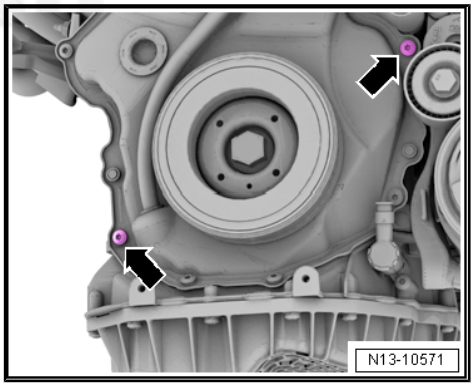

– Fit support - T10531/1- to vibration damper, as shown in illustration, and tighten knurled screws -arrows- by hand.

– Unscrew vibration damper bolt completely.

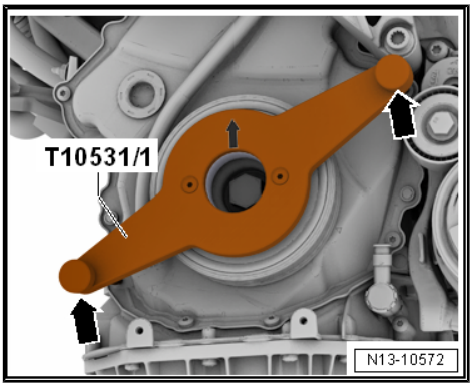

– Check if turning over tool -A- slides easily over clamping pieces -B-. If necessary, turn tensioning bolt -arrow-.

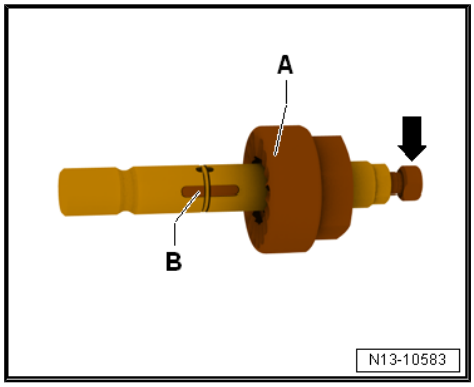

Note

Now, do not turn the tensioning bolt anymore, otherwise the clamping pin - T10531/2- will be jammed when it is screwed into the crankshaft.

– Screw clamping pin - T10531/2- into crankshaft, and tighten it hand-tight with a 12 mm open-end spanner -A-.

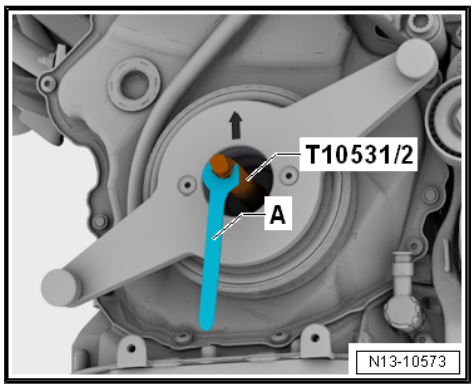

– Tighten tensioning bolt -A- hand-tight. This will lock the chain sprocket in position relative to crankshaft.

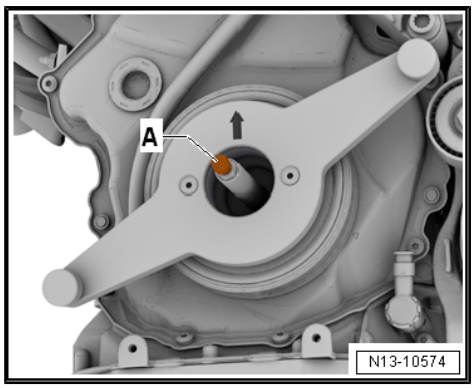

– Unscrew knurled screw -arrows-. Remove support - T10531/1- and vibration damper -A-.

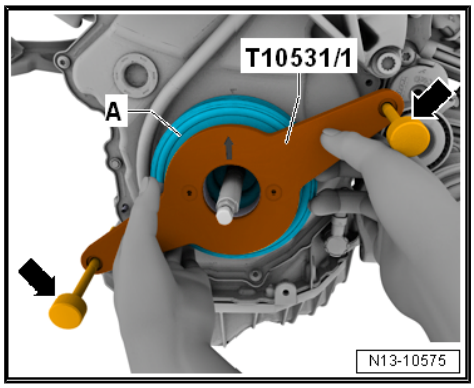

Turning crankshaft without vibration damper

– Fit turning over tool -A- on clamping pin. Pay attention to teeth of chain sprocket while doing so. In TDC position the flat section of the tool faces upwards. Tighten turning over tool with flange nut -B-.

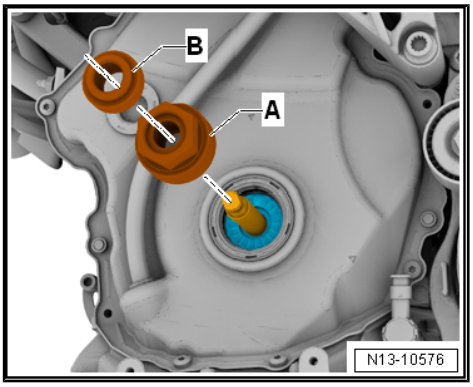

– Now, the crankshaft can be turned on hexagon -arrow-.

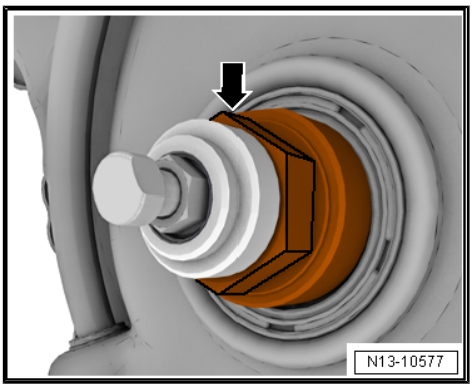

Install vibration damper:

– If necessary, remove flange nut -B- and turning over tool -A- from clamping pin.

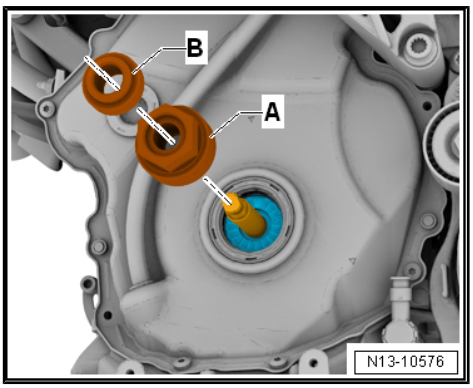

– Fit vibration damper in TDC position. Pay attention to teeth of chain sprocket -arrow- while doing so.

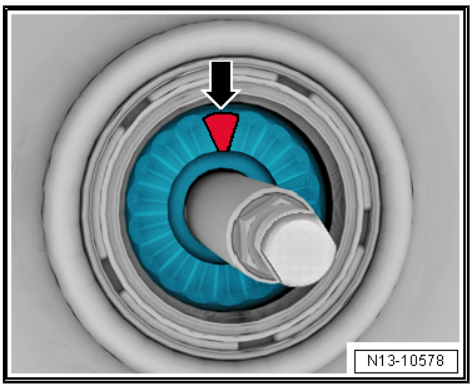

– Fit turning over tool -A- on clamping pin. The hexagon faces towards vibration damper while doing so.

– Screw on flange nut -B-. Move vibration damper slightly back and forth while doing so, in order to ensure that vibration damper is properly seated on teeth. Tighten flange nut, until vibration damper cannot be turned anymore.

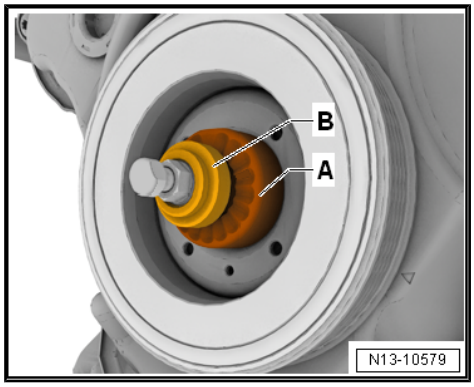

– Fit support - T10531/1- to vibration damper, as shown in illustration, and tighten knurled screws -arrows- by hand.

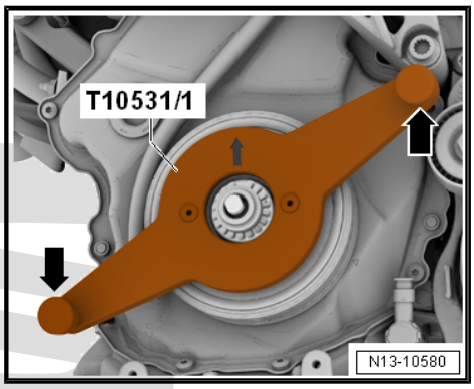

– Unscrew flange nut -A-, and loosen clamping pin -B-. Unscrew clamping pin , and remove it together with turning over tool .

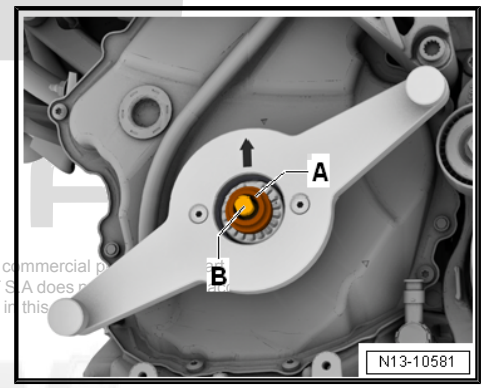

– Screw in new vibration damper bolt with lubricated O-ring -1- by hand.

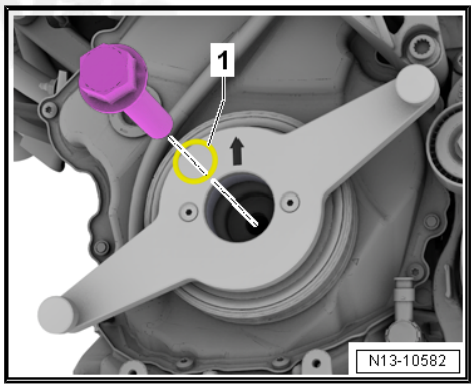

– Unscrew knurled screws -arrows-, and remove support - T10531/1- .

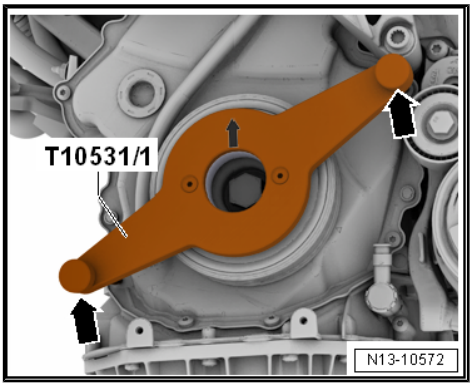

– Tighten vibration damper bolt using counter-hold tool - T10355- .

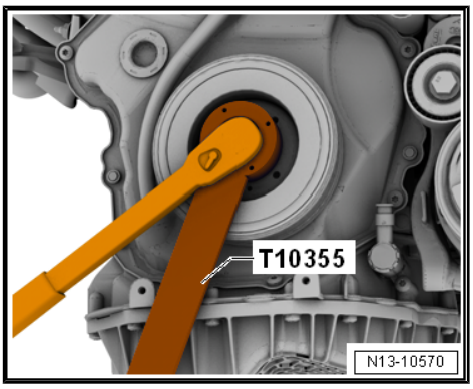

– Screw in new securing bolts -arrows-.

Continue installation following reverse order for removing.

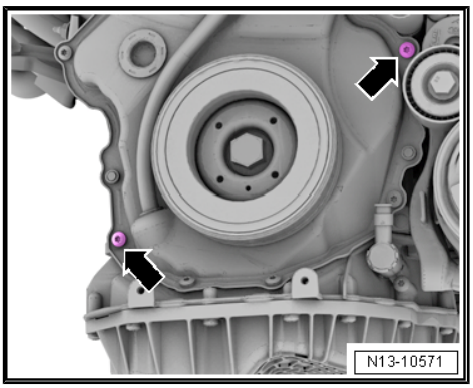

Specified torques

♦ ⇒ “1.1 Exploded view - cylinder block (pulley end)”, page 58

1.5 Removing and installing ancillary bracket

Special tools and workshop equipment required

♦ Drip tray for workshop hoist - VAS 6208-

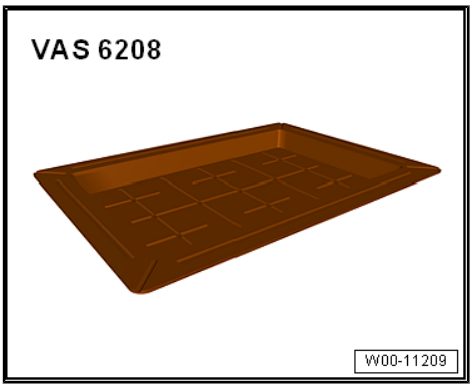

Removing

– Drain coolant ⇒ page 239 .

– Remove alternator ⇒ Electrical system; Rep. gr. 27 ; Alternator; Removing and installing alternator .

– Unplug the connector -1- at the air conditioner compressor regulating valve - N280- .

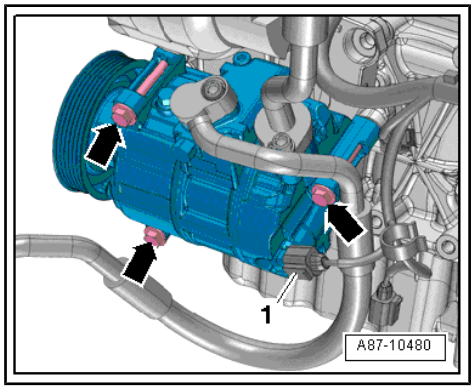

CAUTION

Risk of freezing injury caused by refrigerant.

– Do not open refrigerant circuit of air conditioning system.

– Remove bolts -arrows-.

– Detach air conditioner compressor from bracket (refrigerant hoses remain connected) and tie up to right side.

– Disconnect plug-in connectors:

1 - For oil pressure switch - F1-

2 - For oil pressure switch for reduced oil pressure - F378-

3 - For piston cooling jet control valve - N522-

– Remove oil filter element ⇒ Maintenance ; Booklet 501 ; Engine oil Draining; Renewing oil filter and replenishing engine oil .

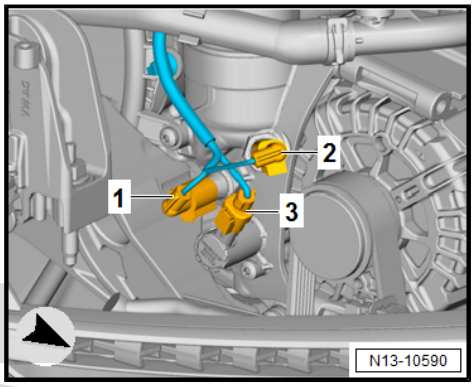

– Unclip retainer for wiring harness -2-. Remove bolt -1- for dipstick guide tube.

– Unclip guide tube from timing chain cover (top) in direction of -arrow-.

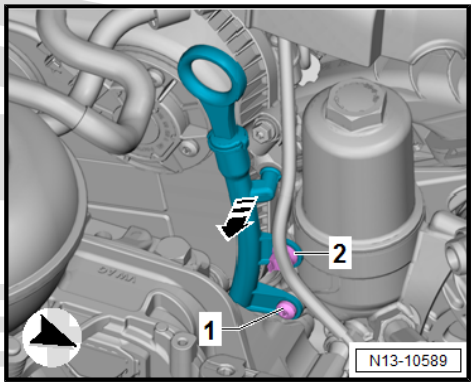

– Move clear electrical wiring harness.

– Fit the drip tray - VAS 6208- under the engine.

– Unscrew bolts -1 ... 5- and detach bracket for ancillaries from coolant pump housing.

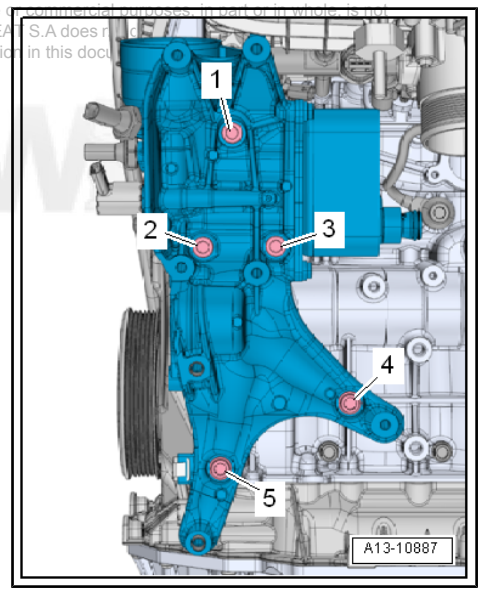

Fitting

Installation is carried out in the reverse order; note the following:

Note

- *Renew the bolts tightened with specified tightening angle.*
- *Renew O-rings and gaskets.*

– Moisten new O-rings -4- with coolant.

– Insert the connecting supports -2- into coolant pump housing -3-.

– Move the ancillaries bracket -1- on the connecting hose, insert the bolts and tighten ⇒ page 59 .

– Install air conditioner compressor ⇒ Rep. gr. 87 ; Air conditioner compressor; Exploded view - air conditioner compressor drive unit .

– Install alternator ⇒ Electrical system; Rep. gr. 27 ; Alternator; Removing and installing alternator .

– Fit poly V-belt ⇒ page 60 .

– Replenish coolant ⇒ page 240 .

– Install oil filter and check oil level ⇒ Maintenance ; Booklet 501 ; Engine oil Draining; Renewing oil filter and replenishing engine oil .

– Install the windscreen washer tank filler ⇒ Electrical system; Rep. gr. 92 ; Windscreen washer system; Removing and installing windscreen washer tank .

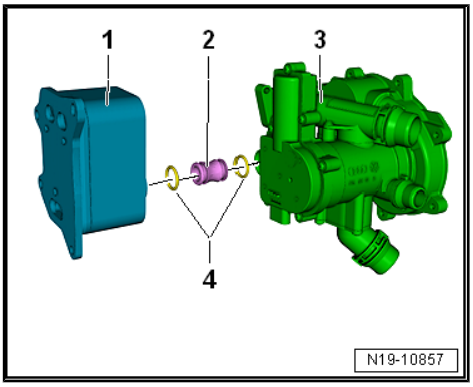

Specified torques

- ⇒ “1.1 Exploded view - cylinder block (pulley end)”, page 58
- ⇒ “2.1 Assembly overview - timing chain cover”, page 119
- ⇒ Electrical system; Rep. gr. 27 ; Alternator; Exploded view - alternator
- ⇒ Electrical system; Rep. gr. 92 ; Windscreen washer system; Assembly overview - windscreen washer system

1.6 Removing and installing engine support

Special tools and workshop equipment required

- Accessories: - T10099-

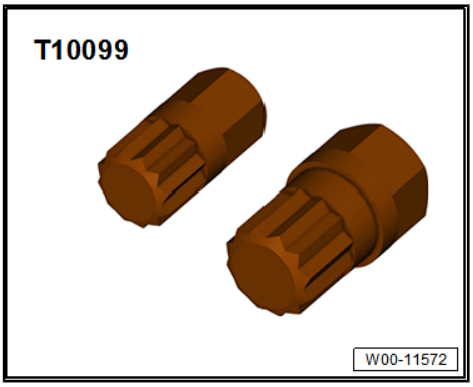

Removing

– Unclip lambda probe wire from retainers -arrows-.

– Remove noise insulation ⇒ General body repairs, exterior; Rep. gr. 66 ; Noise insulation; Assembly overview - noise insulation .

– Remove front part of right wheel housing liner ⇒ General body repairs, exterior; Rep. gr. 66 ; Wheel housing liner; Removing and installing front wheel housing liner .

– Remove engine mounting ⇒ page 45 .

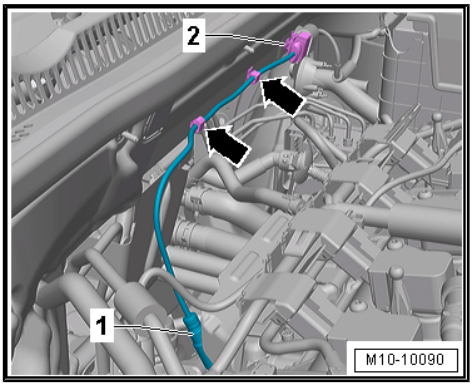

– Slightly lower engine, and unscrew bolts -1- and -2- from below using bit - T10099- .

– Lift engine again, and unscrew bolt -3- from above.

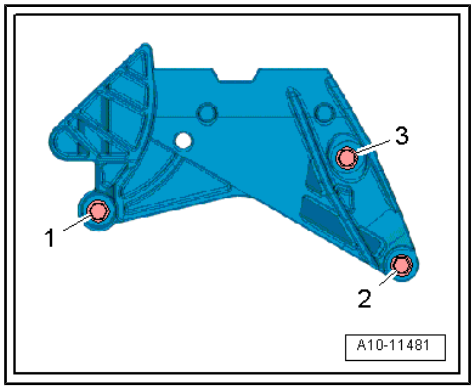

Fitting

Install in the reverse order of removal, observing the following:

Engine support - Tightening torque and sequence

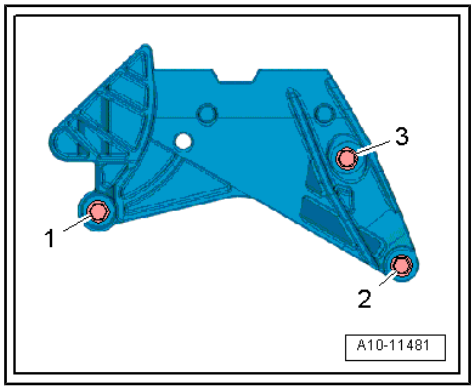

Note

Renew bolts

– Tighten bolts in stages in the sequence shown.

stage	Bolts	Specified torque/turning further angle
1.	-1 - 3-	7 Nm
2.	-1 - 3-	40 Nm
3.	-1 - 3-	Turn 90° further

– Install engine mountings ⇒ page 45 .

Specified torques

- ⇒ “2.1 Installation overview - assembly mountings”, page 44
- ⇒ General body repairs, exterior; Rep. gr. 66 ; Wheel housing liners; Assembly view - front wheel housing liner

1.7 Renewing seal for vibration damper

Special tools and workshop equipment required

- Thrust piece - T10354-

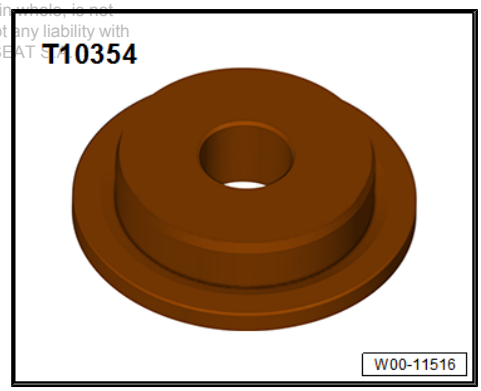

♦ Retainer - T10375-

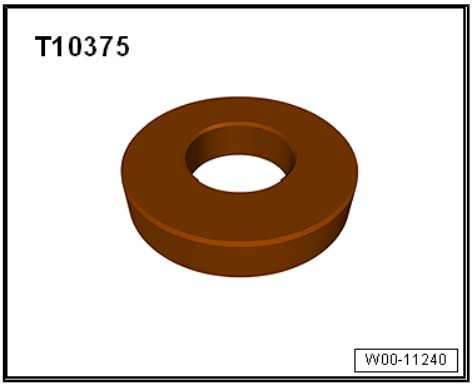

♦ Flange nut - 10531/4- from assembly tool - T10531-

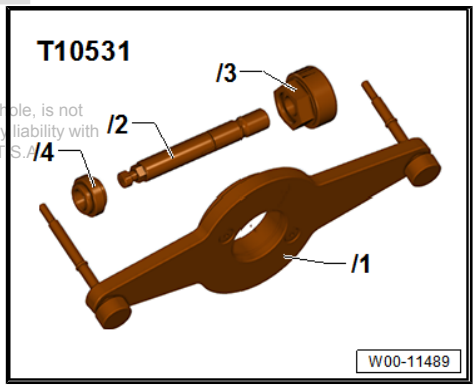

♦ Puller hooks - T40274-

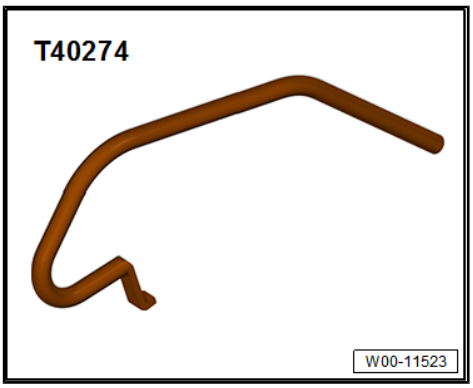

Removing

– Remove vibration damper ⇒ page 61 .

• Clamping pin - T10531/2- is inserted.

– Using extractor hook - T40274- , pull out seal -arrow-.

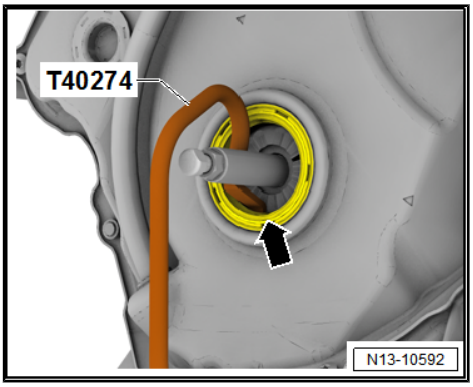

Fitting

– Clean contact surface and sealing surface.

– Slide seal -arrow- onto thrust piece - T10354- .

• Closed side of oil seal faces towards thrust piece - T10354- .

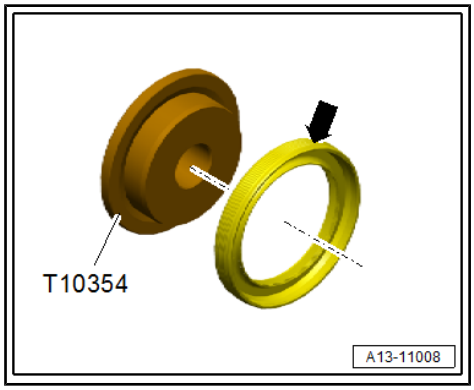

– Slide seal -arrow- with thrust piece - T10354- onto clamping pin - T10531/2- , and fit it to lower timing chain cover.

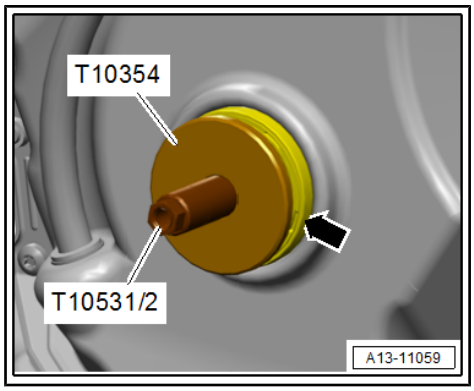

– In addition, fit thrust pad - T10375- , and screw on flange nut - 10531/4- .

– Using 21 mm open-end spanner, tighten flange nut until seal has been pressed in as far as stop.

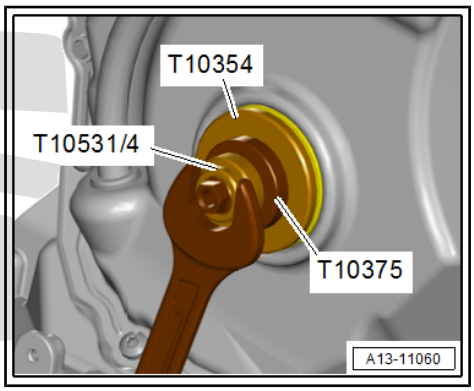

Note

♦ *Renew bolt for vibration damper.*

♦ *Renew O-ring.*

Continue installation following reverse order for removing. The following must be taken into account:

– Fit the vibration damper ⇒ page 61 .

Specified torques

♦ ⇒ “1.1 Exploded view - cylinder block (pulley end)”, page 58

2 Cylinder block, gearbox end

⇒ "2.1 Exploded view - cylinder block, gearbox end", page 73

⇒ "2.2 Removing and installing flywheel", page 74

⇒ "2.3 Removing and installing sealing flange (gearbox end)", page 75

2.1 Exploded view - cylinder block, gearbox end

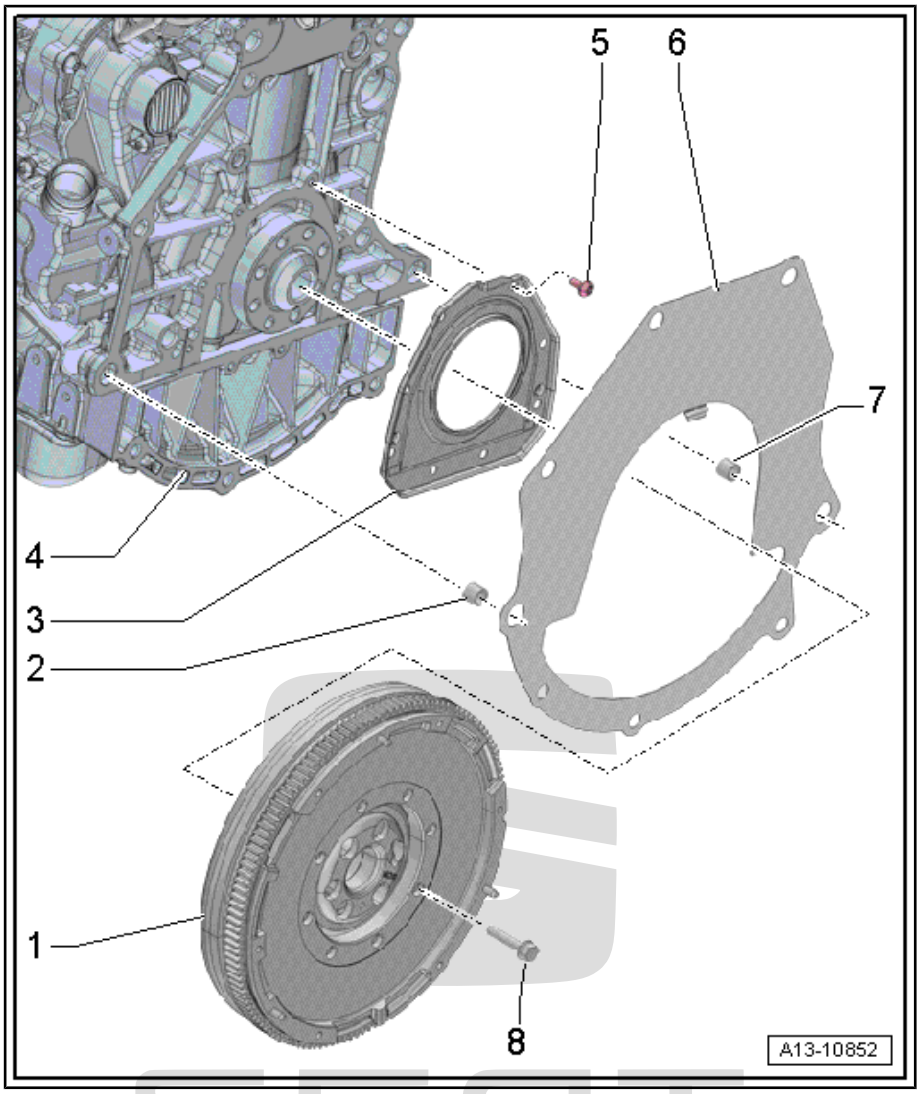

1 - Flywheel

- ❑ Removing and fitting ⇒ page 74
- ❑ Can only be installed in one position (out of step bolts)

2 - Dowel sleeve

3 - Sealing flange on gearbox side

- ❑ with shaft seal
- ❑ Renew
- ❑ Removing and fitting ⇒ page 75
- ❑ Before installing, remove oil residue from crankshaft journal using a clean cloth.
- ❑ Guide sleeve is not to be removed until sealing flange has been slipped onto crankshaft journal

4 - Cylinder block

5 - Bolt

- ❑ Observe tightening sequence ⇒ page 74

6 - Intermediate plate

- ❑ Version fitted in vehicle may differ from illustration
- ❑ Must sit on dowel sleeves
- ❑ Do not damage or bend when assembling.
- ❑ Is suspended on the gasket ⇒ page 74

7 - Dowel sleeve

8 - Bolt

- ❑ For dual-mass flywheel
- ❑ Renew
- ❑ 60 Nm +90°

Install intermediate plate.

– Fit intermediate plate on sealing flange and push onto dowel sleeves -arrows-.

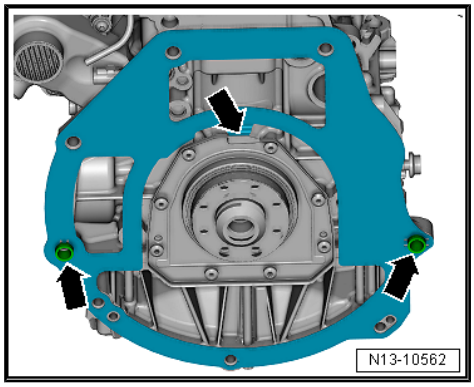

Sealing flange at gearbox end - tightening sequence

– Tighten bolts -1 to 8- in the specified sequence.

Stage	Bolts	Specified torque/turning further angle
1.	-1 - 8-	Screw in by hand as far as stop
2.	-1 - 8-	9 Nm

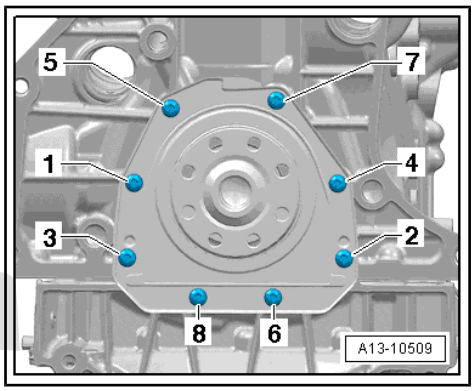

2.2 Removing and installing flywheel

Special tools and workshop equipment required

♦ Counterhold - 3067-

Removing

• Gearbox removed.

Note

♦ *Remove bolts -B- using normal hand tools (do not use pneumatic wrench or impact driver, etc.).*

♦ *When removing the bolts, make sure that the bolt heads do not come into contact with the flywheel.*

♦ *Rotate the flywheel -A- so that the bolts -B- align centrally with the holes -arrows-.*

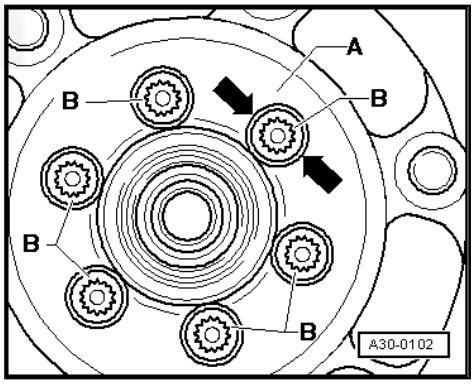

– Insert counter-hold tool - 3067- in hole -B- of cylinder block.
– Loosen and remove flywheel bolts.

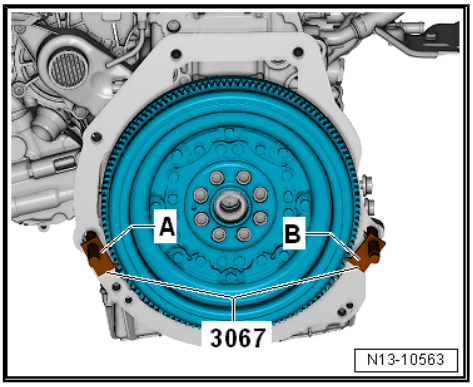

Fitting

Install in the reverse order of removal, observing the following:

Note

Renew the bolts tightened with specified tightening angle.

– Insert counter-hold tool - 3067- in hole -A- of cylinder block.

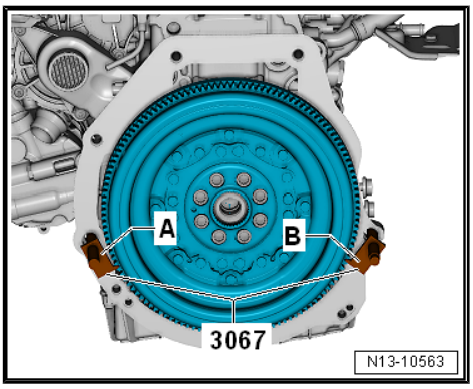

Specified torques

♦ ⇒ “2.1 Exploded view - cylinder block, gearbox end”, page 73

2.3 Removing and installing sealing flange (gearbox end)

Special tools and workshop equipment required

♦ Guide piece - T10122/6- or -T10122/6A- from fitting tools - T10122B- or -T10122C-

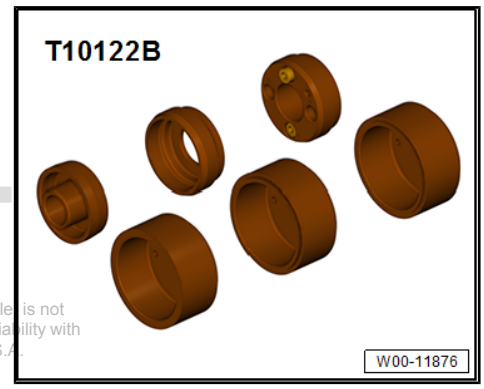

♦ Assembly aid - T10122/1- from fitting tools - T10122B- or -T10122C-

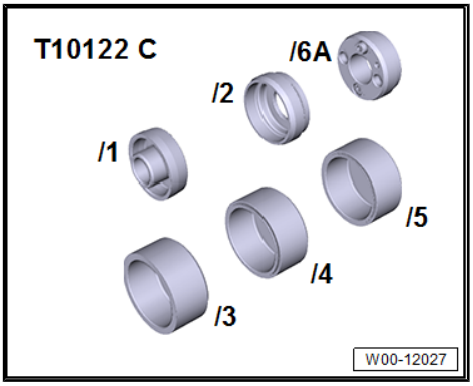

♦ Hand drill with plastic brush attachment
♦ Protective glasses

♦ Sealant ⇒ Electronic parts catalogue (ETKA)

Removing

- Gearbox removed.

– Remove flywheel ⇒ page 74 .

– Detach intermediate plate at sealing flange and dowel sleeves -arrows-.

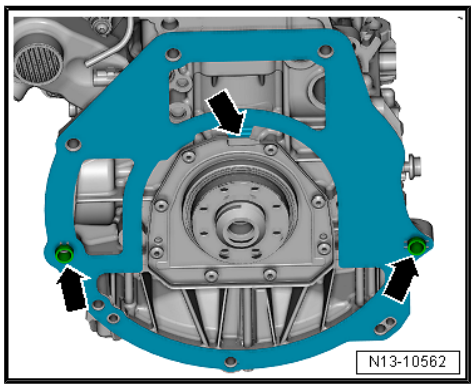

– Unscrew bolts -1 … 8-.

– Remove sealing flange.

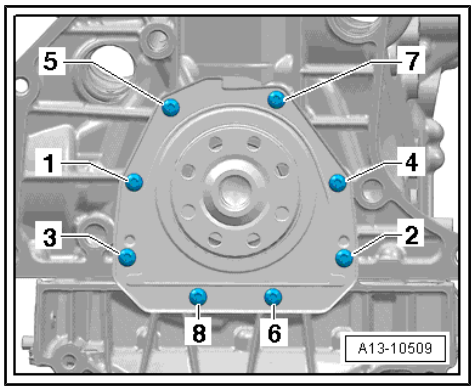

Fitting

Install in reverse order of removal, observing the following:

Note

♦ *Observe use-by date of silicone sealant.*

♦ *The sealing flange should be fitted into place 5 minutes after the application of the sealant.*

♦ *In order to prevent the lubrication system from being soiled with sealant residue cover the open section of the sump with a clean cloth.*

CAUTION

Risk of eye injury caused by sealant residue.

– Wear safety goggles.

– Remove sealant remaining on cylinder block with flat scraper or rotating plastic brush.

– Clean sealing surfaces. They must be oil and grease free.

– Clean crankshaft journal. If there is any rust, lightly coat crankshaft journal with oil.

– Cut off nozzle on tube at front marking (∅ of nozzle approx. 2 mm).

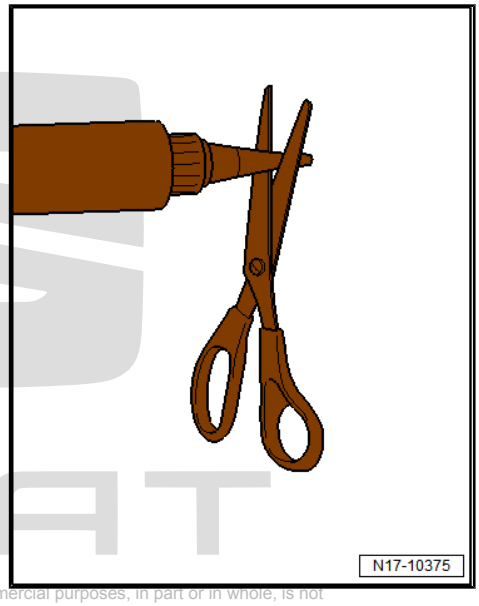

– Apply silicone sealant as shown to clean sealing surface of sealing flange.

♦ Thickness of sealant bead: 2 to 3 mm.

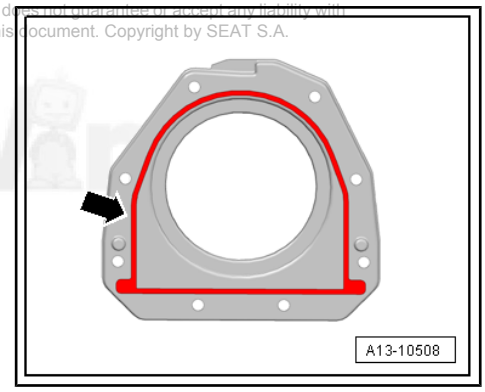

Note

♦ *The sealing flange must be installed within 5 minutes after applying the silicone sealant.*

♦ *The line of sealant must not be thicker than prescribed, as otherwise excessive sealant will enter the sump and obstruct the strainer in the oil intake pipe.*

♦ *Check sealing flange; it must be free of kinks and damage.*

♦ *The sealing lip must face engine following installation. If the sealing lip is pressed outwards during installation, there may be loss of oil due to leakages.*

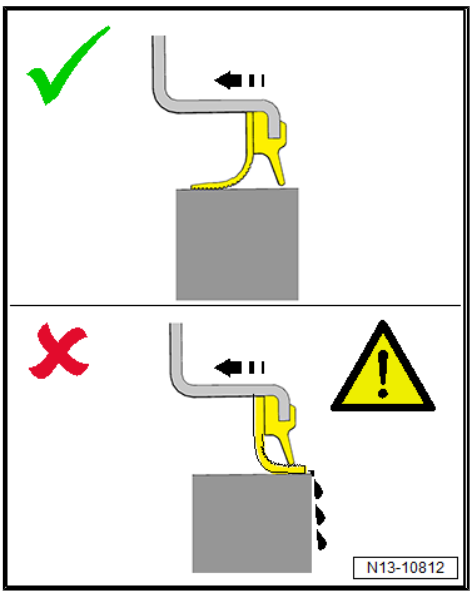

– Check guide - T10122/6- -B- for any deformations or sharp edges.
– Attach assembly aid - T10122/1- -A- to guide - T10122/6- -B-.
– Push sealing flange -C-, with outer side leading, onto guide piece - T10122/6- -B-.
– Remove assembly aid -A-.

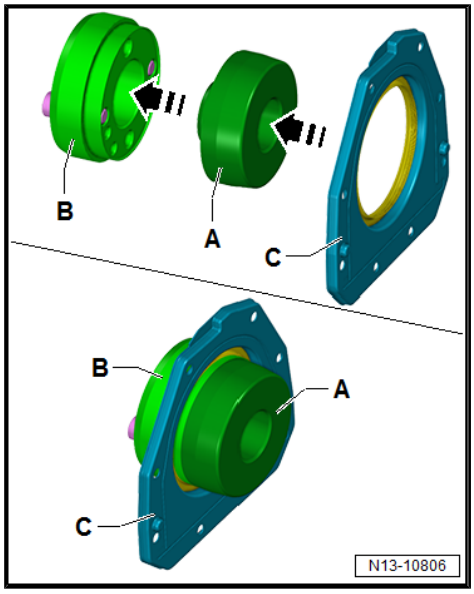

– Put guide -A- with sealing flange -B- onto crankshaft journal.

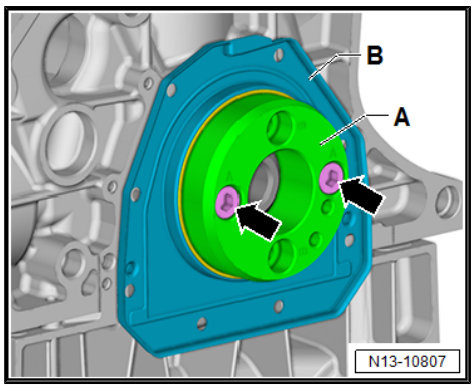

Note

It is not necessary to tighten the bolts -arrows-.

– Push sealing flange -B- over guide -A- onto crankshaft journal.
– Remove guide -A-.

– Tighten new bolts evenly in the sequence shown.

Stage	Bolts	Specified torque/turning further angle
1.	-1 - 8-	Screw in by hand as far as stop
2.	-1 - 8-	9 Nm

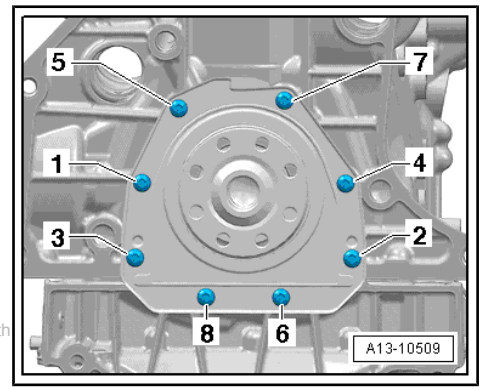

Note

After installing the sealing flange, wait about 30 minutes for the sealant to dry. Then (and only then) fill the engine with engine oil.

Continue installation following reverse order for removing.

Specified torques

◆ ⇒ “2.1 Exploded view - cylinder block, gearbox end”, page 73

3 Crankshaft

3.1 Assembly overview - crankshaft

Note

Secure engine to repair stand using engine and gearbox support - VAS 6095- when dismantling/assembling engine ⇒ page 37 .

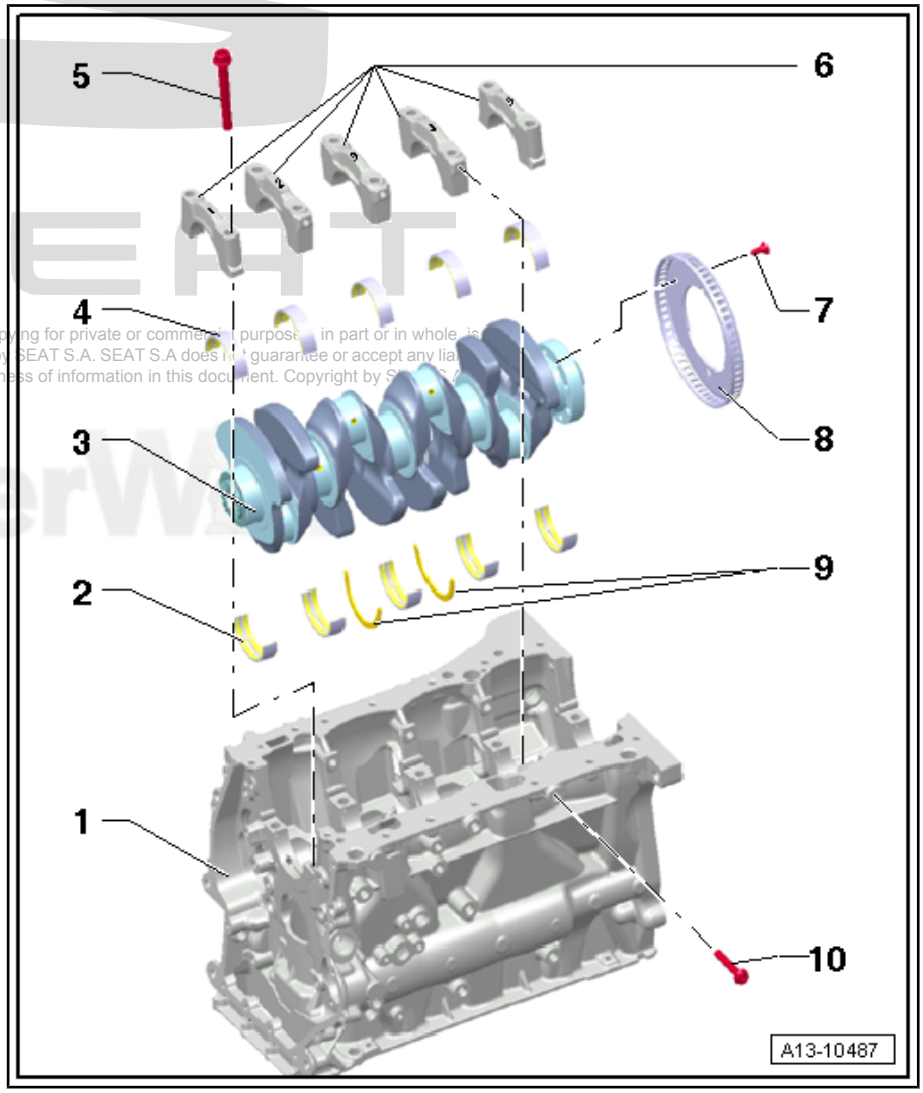

1 - Cylinder block

2 - Engine block bearing shell

- ❑ With lubrication groove
- ❑ Lubricate
- ❑ Do not interchange used bearing shells (mark positions)
- ❑ Classification of crankshaft bearing shells ⇒ page 81

3 - Crankshaft

- ❑ After removing, place it down so that the sender wheel ⇒ Item 8 (page 80) does not become damaged
- ❑ If crankshaft is renewed, bearing shells must be reassigned to bearing cap ⇒ page 81
- ❑ Axial clearance ⇒ page 84
- ❑ Radial clearance ⇒ page 85
- ❑ Do not rotate crankshaft when checking radial clearance
- ❑ Crankshaft dimensions ⇒ page 80 .

4 - Bearing shell for bearing cap

- ❑ Without lubrication groove
- ❑ Lubricate
- ❑ Do not interchange used bearing shells (mark positions)

- ❑ Classification of crankshaft bearing shells ⇒ page 81

5 - Bolt

- ❑ Must be renewed if removed
- ❑ Tightening sequence ⇒ page 80

6 - Bearing cap

- ❑ Bearing cap 1: belt pulley end.
- ❑ Bearing shell retaining lugs (cylinder block/bearing cap) must be on the same side

7 - Bolt

- ❑ Renew after removing
- ❑ Sender wheel must be renewed if bolts are loosened ⇒ page 85
- ❑ 10 Nm +90°

8 - Sender wheel

- ❑ For engine speed sender - G28-
- ❑ Can only be installed in one position, holes are offset.
- ❑ Sender wheel must be renewed if bolts are loosened
- ❑ Removing and fitting ⇒ page 85

9 - Thrust washers

- ❑ For bearing 3
- ❑ Lubricate

10 - Bolt

- ❑ Renew
- ❑ Tightening sequence ⇒ page 80

Crankshaft - tightening sequence

1. Tighten bolts -1 ... 10- and -arrows A- by hand.
2. Tighten bolts -1 ... 10- initially to 65 Nm.
3. Turn bolts -1 … 10- 90° further using a rigid wrench.
4. Initially tighten bolts -arrows A- to 20 Nm.
5. Turn bolts -arrows A- 90° further using a rigid wrench.

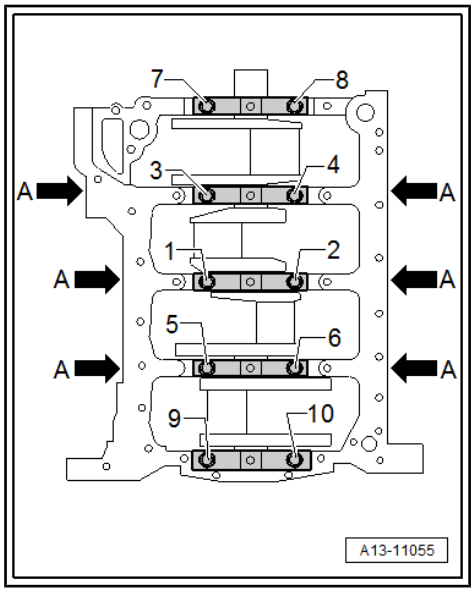

3.2 Crankshaft dimensions

(Dimensions in mm)

Honing dimension [1]	∅ Crankshaft main bearing journal	∅ Conrod journal
Basic dimension	58.00	47.80

[1] There is currently no provision for machining used crankshafts.

3.3 Arrangement of the crankshaft bearing shells

Bearing shells of the correct thickness are allocated to the cylinder block at the factory. The bearing shells thickness is marked with coloured spots.

Letter codes on lower sealing surface or end of cylinder block indicate which bearing shell is to be fitted in cylinder block (top bearing shell) at each location.

Letter codes on crankshaft indicate which bearing shell is to be fitted in bearing cap (bottom bearing shell).

The first letter stands for bearing cap 1, the second letter for bearing cap 2, etc.

Marking of bearing shell for cylinder block:

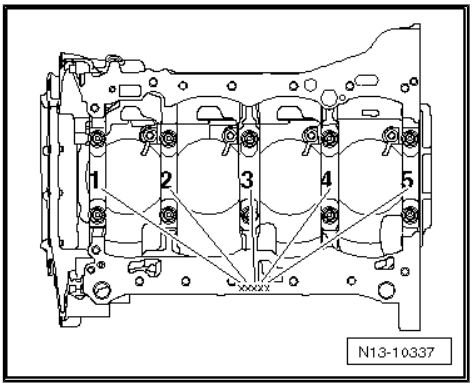

Note

Markings on cylinder block are applied either onto sealing surface for sump or gearbox end of cylinder block.

The identification letters on the cylinder block apply for the top bearing shell (bearing shell for the cylinder block).

– Note down letters and refer to table for colour code to be fitted.

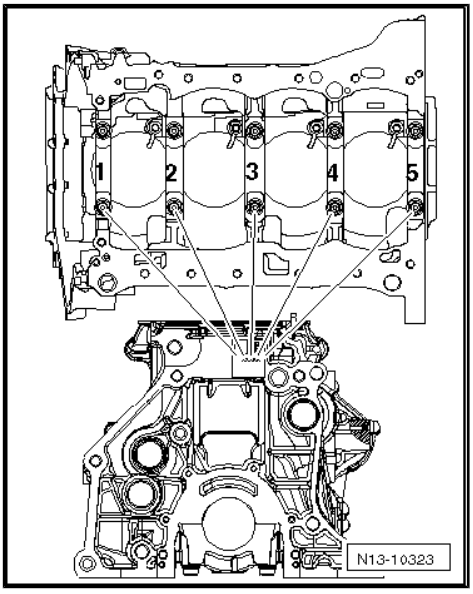

Marking of bearing shell for bearing cap:

Marking on crankshaft refers to bottom bearing shell (bearing shell for bearing cap).

– Note down letters and refer to table for colour code to be fitted.

S	=	Black
R	=	red
G	=	Yellow
B	=	blue
W.	=	White

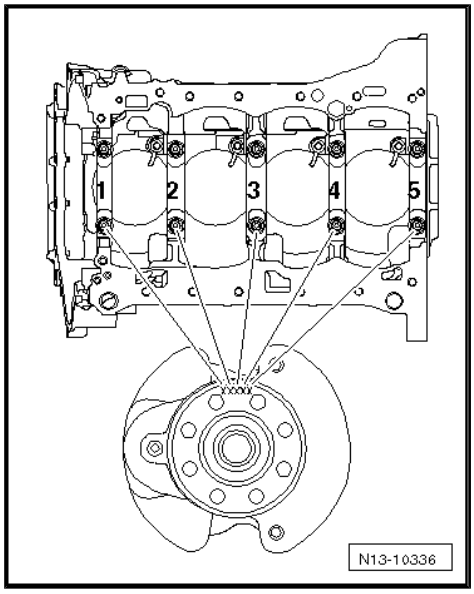

3.4 Renewing needle bearing in crankshaft

Only vehicles with a dual clutch gearbox

Special tools and workshop equipment required

♦ Counter support e.g. KUKKO 22-1 - VAS 251 621-

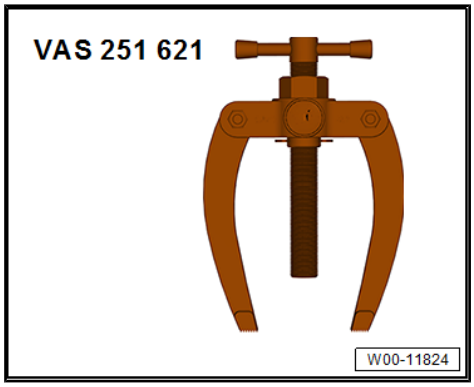

♦ Internal puller - VAS 251 635-

♦ Drift - VW 207 C-

Requirement:

- The front edges of the internal puller must not be chipped.
- Gearbox has been removed.

Pulling out needle roller bearing

– Pull out needle bearing -1- with internal puller - VAS 251 635- -A- and counter support, e.g. KUKKO 22-1 - VAS 251 621- -B- from crankshaft -2-.

– The internal puller must be positioned behind the needle roller and cage assembly -arrow-.

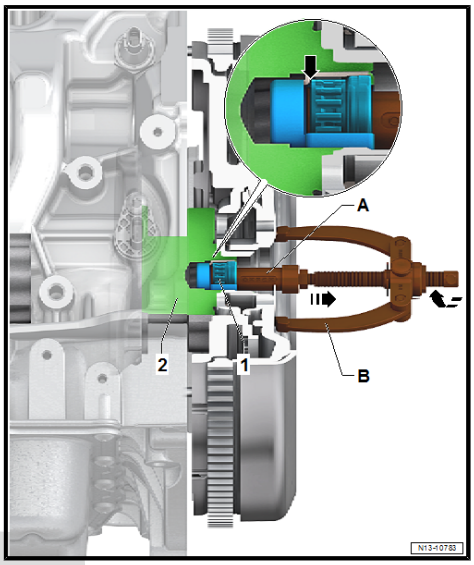

Fitting

– Clean bearing seat in crankshaft and grease lightly.

– Drive needle bearing into crankshaft to installation depth using drift - VW 207 C- .

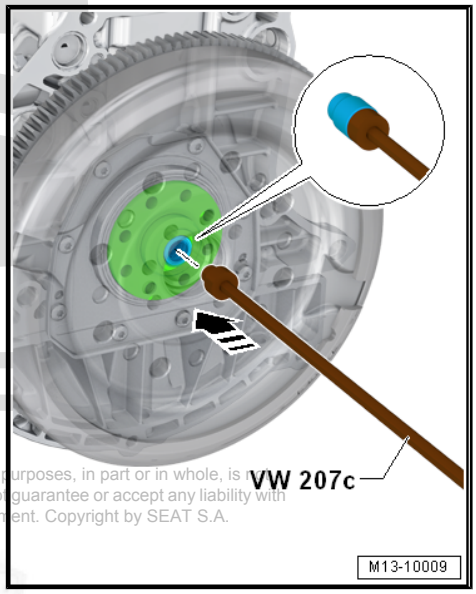

Installation depth: dimension -a- = 2.0 mm

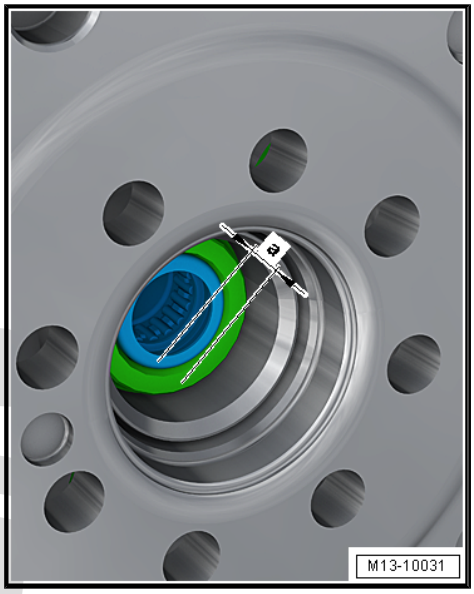

Note

If the needle bearing is inadvertently driven in too far, it must be renewed because it will be damaged when it is pulled out again.

3.5 Measure axial play of crankshaft

Special tools and workshop equipment required

- Universal dial gauge bracket - VW 387-

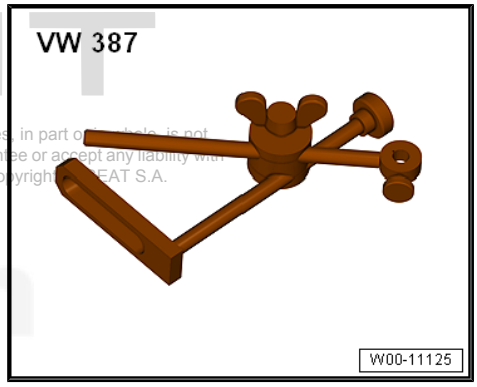

- Dial gauge - VAS 6079-

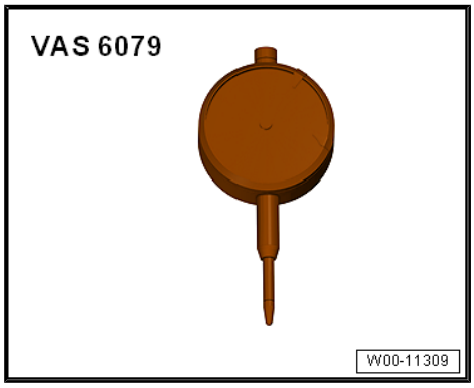

Operation process

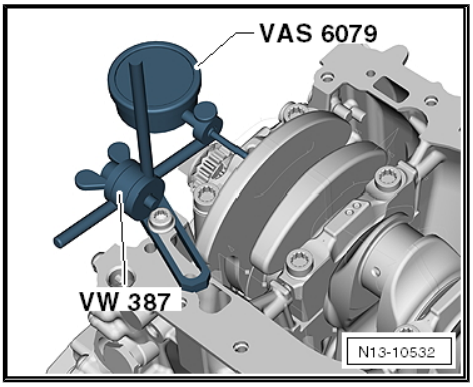

– Screw dial gauge - VAS 6079- with universal dial gauge holder - VW 387- onto cylinder block and set against crank web with projection of approx. 2 mm.

– Push the crankshaft by hand against the gauge and adjust this to “0”.

– Push crankshaft away from dial gauge and read off measured value.

Axial clearance:

- New: 0.07 ... 0.23 mm
- Wear limit: 0.30 mm

3.6 Measure radial play for crankshaft

Special tools and workshop equipment required

♦ Plastigage

Working sequence

Note

♦ *Do not interchange used bearing shells.*

♦ *Renew bearing shells worn down to nickel layer.*

– Remove crankshaft bearing cap, and clean bearing cap and bearing journal.

– Place a length of Plastigage corresponding to the width of the bearing on the bearing journal or bearing shell.

- The Plastigage thread should remain in the centre of the half bearing.

– Fit crankshaft bearing cap; and tighten it to 1 Nm using old bolts -1 ... 10- ⇒ page 80 . Make sure not to rotate crankshaft while tightening.

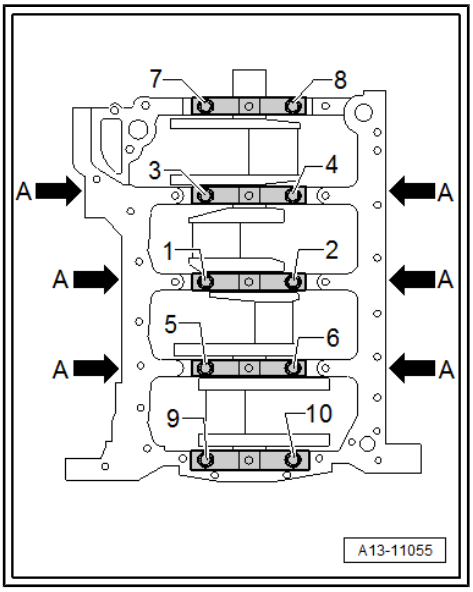

Note

Disregard bolts -arrows A-.

– Remove crankshaft bearing cap again.

– Compare width of Plastigage with measurement scale.

Radial clearance:

- New: 0.017 ... 0.037 mm
- Wear limit: 0.15 mm

3.7 Sender wheel: removing and installing

– Remove engine ⇒ page 11 .

– Remove sealing flange (gearbox end) ⇒ page 75 .

– Remove upper section of sump ⇒ page 208 .

– Remove balance shaft timing chain ⇒ page 148 .
– Unbolt conrod bearing caps.
– Remove crankshaft bearing caps.
– Remove crankshaft and unbolt sender wheel.
– Replace the sender wheel -2- each time the bolts -1- are loosened.

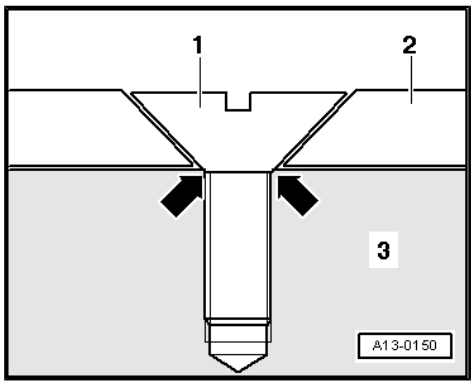

Note

- *If the countersunk bolts are tightened a second time, the seats for the bolt heads in the sender wheel will be deformed to such an extent that the bolt heads make contact with the crankshaft -3- -arrows- and the sender wheel beneath the bolts will be loose.*
- *The sender wheel can only be installed in one position, the holes are offset.*

Specified torques

- ⇒ “3.1 Assembly overview - crankshaft”, page 79

4 Balancing shaft

⇒ "4.1 Assembly overview - balancer shaft", page 87

⇒ "4.2 Removing and installing balance shaft", page 88

⇒ "4.3 Renewing oil seal for balance shaft (inlet side)", page 92

4.1 Assembly overview - balancer shaft

Note

- *After working on the chain drive, adapt learnt values in engine control unit. To do this, switch on ignition, and select the following menu options on vehicle diagnostic tester :*
- `Engine control unit functions`
- `0001 - Adaption of chain drive after repairs`

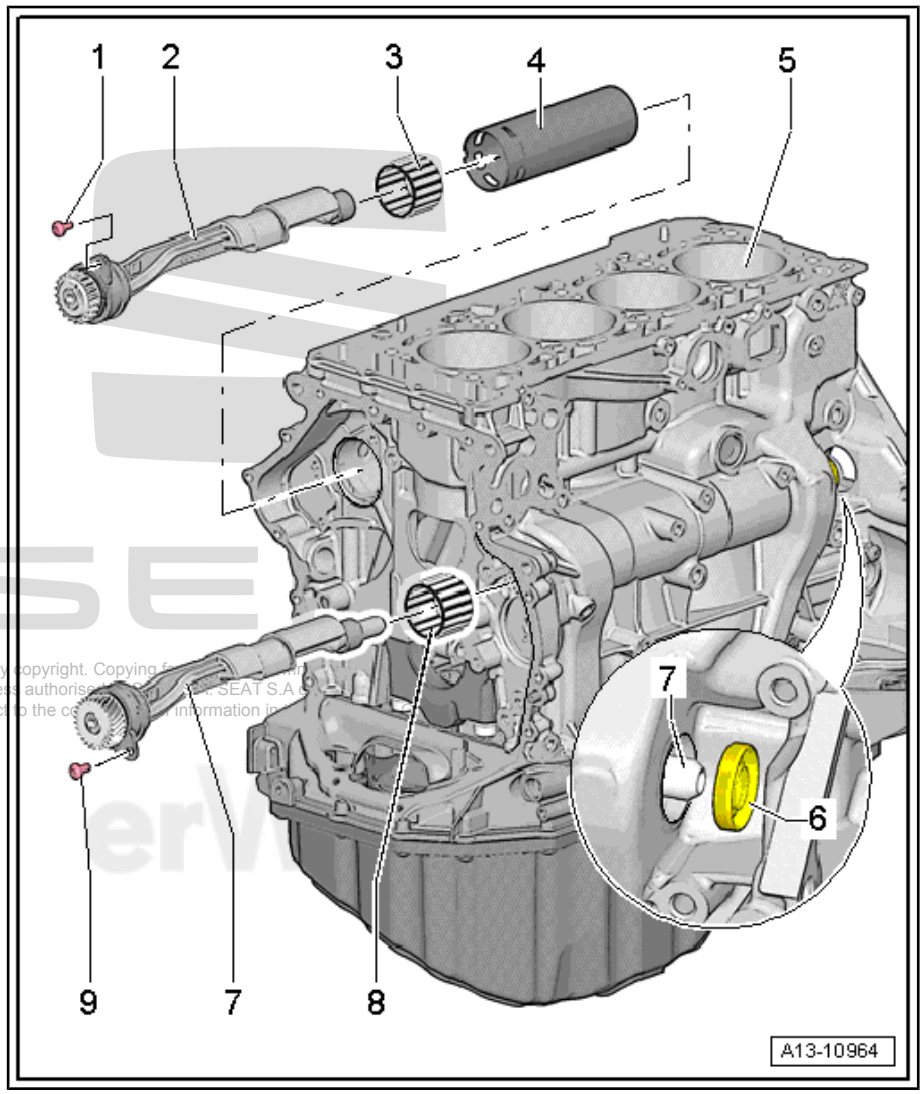

1 - Bolt
- ❑ Renew after removing
- ❑ 4 Nm +45°

2 - Balancer shaft
- ❑ Exhaust side
- ❑ Renew only as pair.
- ❑ Lubricate bearing with engine oil
- ❑ Renewing ⇒ page 91

3 - Gear ring for needle bearing
- ❑ Renew each time balance shaft is removed.
- ❑ The gear ring for needle bearing is colour coded. A gear ring for needle bearing with the same colour coding must be installed

4 - Tube for balancer shaft
- ❑ Installation position ⇒ page 88 .

5 - Cylinder block

6 - Oil seal for balance shaft, inlet side
- ❑ Replace ⇒ page 92

7 - Balancing shaft
- ❑ Intake side
- ❑ Renew only as pair.
- ❑ Lubricate bearing with engine oil
- ❑ Replace ⇒ page 88

8 - Gear ring for needle bearing
- ❑ Renew each time balance shaft is removed.

- ❑ The gear ring for needle bearing is colour coded. A gear ring for needle bearing with the same colour coding must be installed

9 - Bolt

- ❑ Renew
- ❑ 4 Nm + +45° further

Tube for balance shaft - installation position

The openings -arrow- must face chain side.

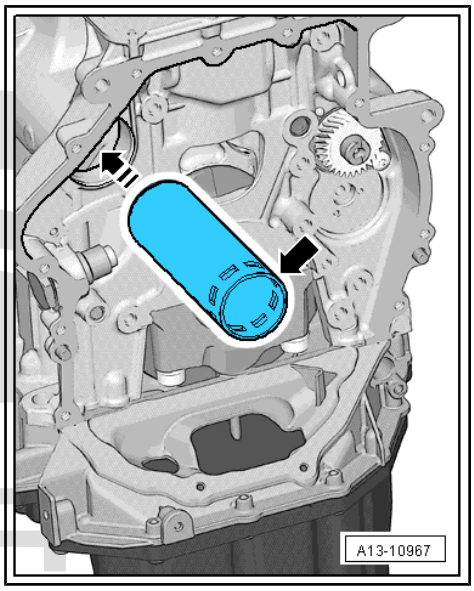

4.2 Removing and installing balance shaft

⇒ “4.2.1 Removing and installing inlet side balance shaft”, page 88

⇒ “4.2.2 Removing and installing exhaust side balance shaft”, page 91

4.2.1 Removing and installing inlet side balance shaft

Needle bearing must be renewed after each removal. Install new needle bearing with same colour code.

Removing

- Engine is removed.

– Remove toothed belt for coolant pump ⇒ page 273 .

– Remove timing chain cover (top) ⇒ page 121 .

– Remove lower timing chain cover ⇒ page 123 .

– Remove camshaft timing chain and drive chain for balance shafts ⇒ page 134 .

– Unscrew the bolt -2-.

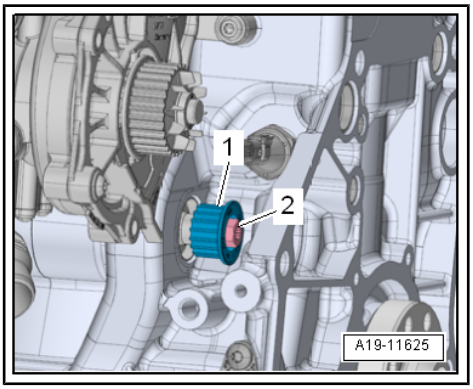

Note

The drive sprocket bolt has a left-hand thread.

– Detach drive sprocket -1- for toothed belt for coolant pump.

– Remove idler gear -1-.

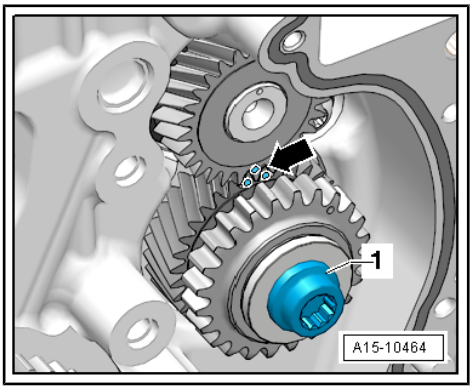

– Remove bearing mounting -1-.

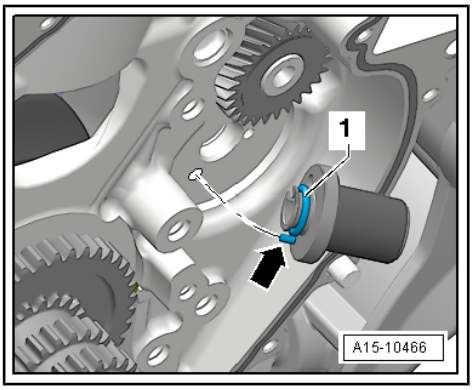

– Remove bolt -2- securing balance shaft (inlet side) and pull out balance shaft.

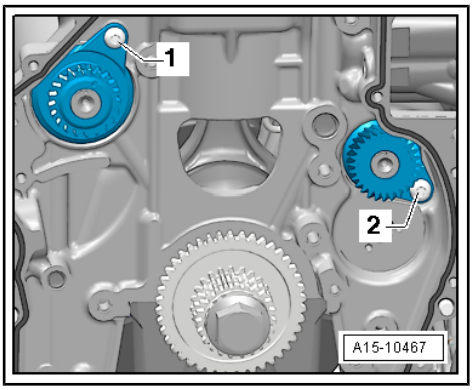

Fitting

– Lubricate bearing points of balance shaft -arrows- with engine oil.

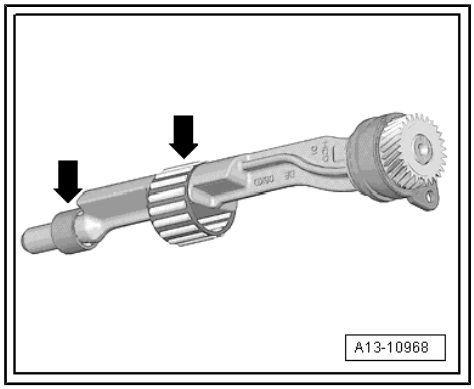

– Install balance shaft (inlet side) and tighten bolt -2-.

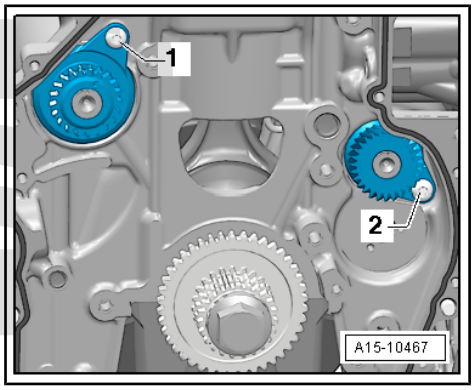

– Renew O-ring -1- and lubricate with engine oil.

– Lubricate bearing mounting with engine oil and install; dowel pin -arrow- for bearing mounting must engage in bore in cylinder block.

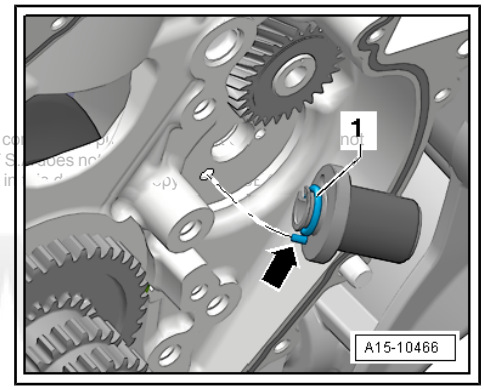

Note

- *Always renew idler gear. Otherwise, the play between the gear teeth is not ensured, which causes the engine to become damaged.*
- *The new idler gear has a special lubricant coating which wears off after a short running period and thus automatically creates the specified backlash.*

– Mark faces of gear teeth of idler gear with paint marker -arrow-.

– Insert idler gear; marking on balance shaft must be positioned between markings on faces of gear teeth.

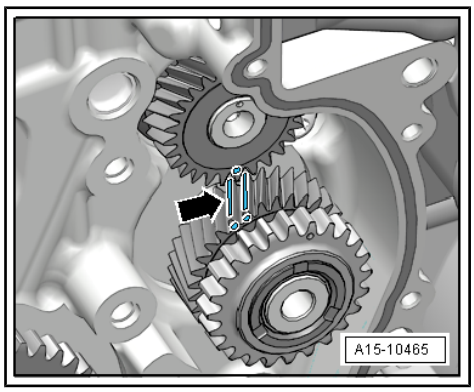

– Tighten bolts -1- of the idler gear. Tightening sequence ⇒ page 132 .

– Check markings on idler gear/balance shaft -arrow-.

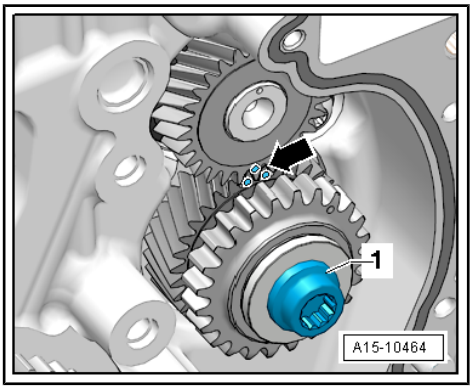

Further assembly is performed in the reverse order of removal. During this procedure, observe the following:

– Install drive chain for balance shafts and camshaft timing chain ⇒ page 134 .

– Install timing chain cover (bottom) ⇒ page 123 .

– Install timing chain cover (top) ⇒ page 121 .

– Renew oil seal for balance shaft (inlet side) ⇒ page 92 .

– Fit the timing belt for the coolant pump ⇒ page 273 .

Specified torques

♦ ⇒ “4.1 Assembly overview - balancer shaft”, page 87

4.2.2 Removing and installing exhaust side balance shaft

Needle bearing must be renewed after each removal. Install new needle bearing with same colour code.

Removing

• Engine is removed.

– Remove timing chain cover (top) ⇒ page 121 .

– Remove lower timing chain cover ⇒ page 123 .

– Remove camshaft timing chain ⇒ page 134 .

– Remove camshaft timing chain and drive chain for balance shafts ⇒ page 134 .

– Unscrew bolt -1- for balance shaft on exhaust side, and pull out balance shaft.

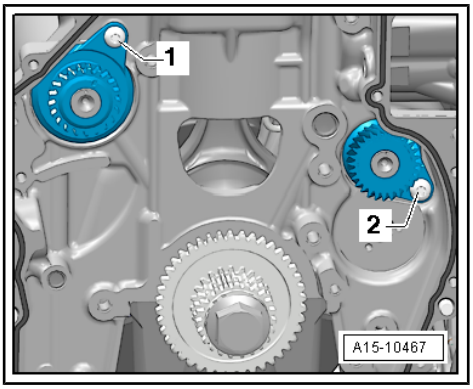

Installation

– Check installation position of tube for balance shaft; openings -arrow- must face chain side.

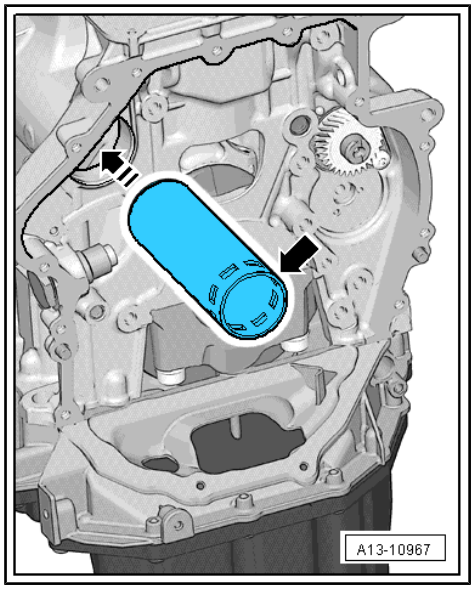

– Lubricate bearing points of balance shaft -arrows- with engine oil.

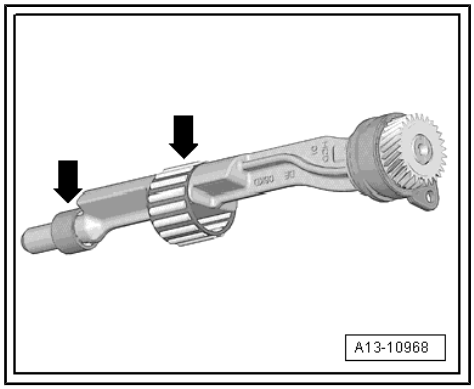

– Install balance shaft (exhaust side).

– Before tightening bolt -1-, check if balance shaft rests flat against crankcase.

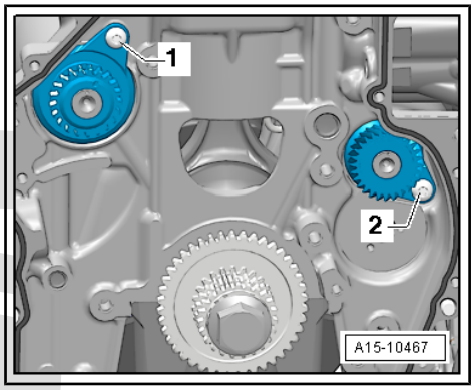

Note

If the balance shaft does not rest flat, the pipe for balance shaft must be inserted again.

Further assembly is performed in the reverse order of removal. During this procedure, observe the following:

– Install drive chain for balance shafts and camshaft timing chain ⇒ page 134 .

– Install timing chain cover (bottom) ⇒ page 123 .

– Install timing chain cover (top) ⇒ page 121 .

Specified torques

♦ ⇒ “4.1 Assembly overview - balancer shaft”, page 87

4.3 Renewing oil seal for balance shaft (inlet side)

Special tools and workshop equipment required

♦ Thrust piece - T10353/1-

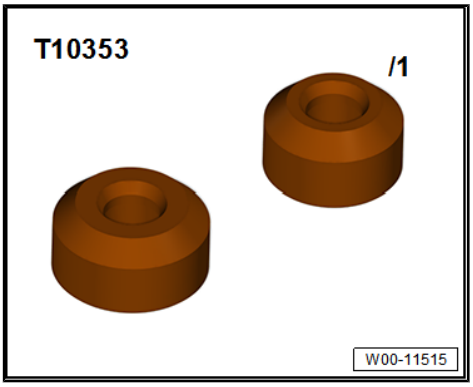

Operation process

– Remove the timing belt from the coolant pump ⇒ page 273 .
– Unscrew the bolt -2-.
– Detach drive sprocket -1- for toothed belt for coolant pump.

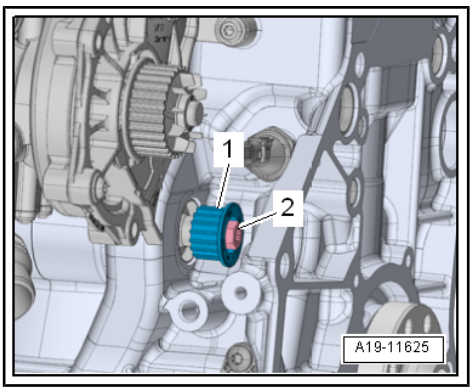

– Press screwdriver -1- firmly onto section -2- of seal -arrow B-.
– Lever out oil seal -arrow A-.
– Clean contact surface and sealing surface.

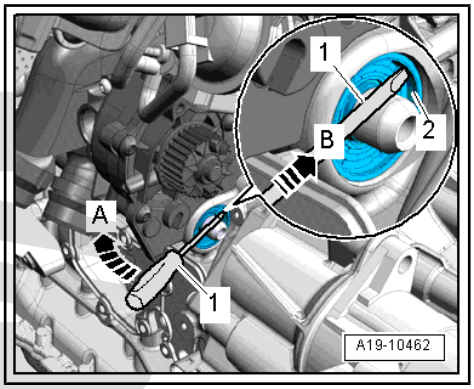

– Lubricate sealing surface of balance shaft -2- with gear oil.
– Fit oil seal -1- onto balance shaft.
• The marking “Luftseite” (or “Outside”) -arrow- should be legible from the outside.

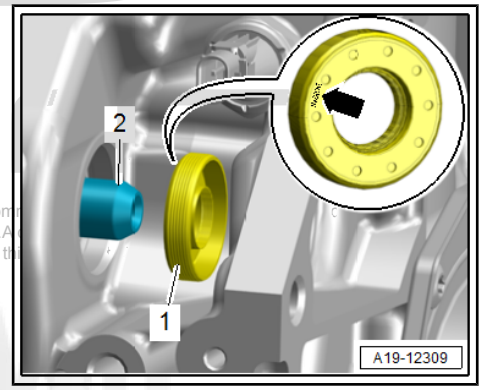

Note

The drive sprocket bolt has a left-hand thread.

– Apply thrust piece - T10353/1- to oil seal -1- and press into cylinder block as far as stop using bolt -2- (take care not to tilt oil seal).
– Fit toothed belt for coolant pump ⇒ page 273 .
– Replenish coolant ⇒ page 240 .

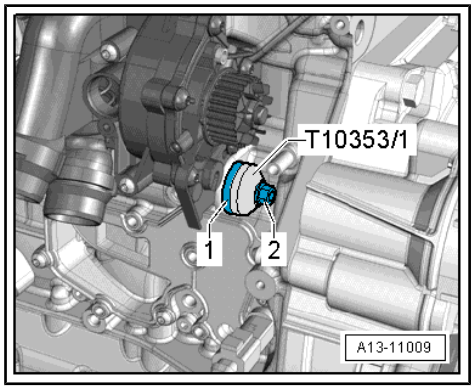

5 Pistons and conrods

5.1 Exploded view - pistons and conrods

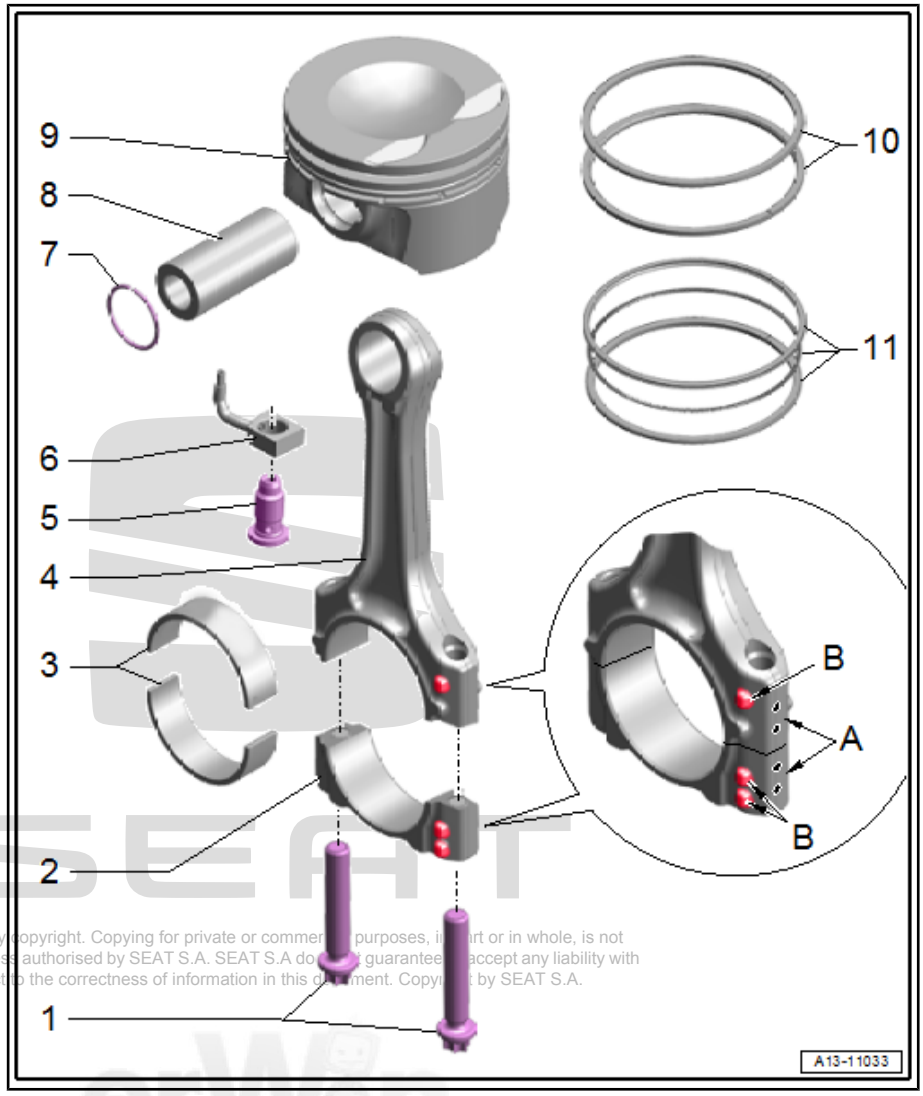

1 - Conrod bearing bolts

- ❑ Must be renewed if removed
- ❑ Apply engine oil to thread and contact surface
- ❑ Use old bolts to measure radial clearance.
- ❑ 45 Nm +90°

2 - Conrod bearing cap

- ❑ Observe installation position
- ❑ Conrod bearing cap only fits in one position and only on the appropriate conrod due to the breaking procedure (cracking) separating the cap from the conrod
- ❑ Mark allocation to cylinder and conrod in colour -A-
- ❑ Fitting position: The marks -B- should point in the direction of the pulley
- ❑ Separating new conrod ⇒ page 102 .

3 - Bearing shells

- ❑ Installation position ⇒ page 98 .
- ❑ Renew used bearing shells
- ❑ Before installation, lubricate with engine oil
- ❑ Axial clearance

♦ New: 0.10 ... 0.35 mm

♦ Wear limit: 0.40 mm

- ❑ Measuring radial clearance ⇒ page 102

4 - Conrod

- ❑ only renew as a complete set
- ❑ Mark allocation to cylinder and to conrod bearing cap

- ❑ Fitting position: The marks -B- should point in the direction of the pulley
- ❑ Separating new conrod ⇒ page 102 .
- ❑ Measuring radial clearance ⇒ page 102

5 - Pressure relief valve

- ❑ 27 Nm

6 - Oil spray jet

- ❑ For piston cooling
- ❑ Installation position ⇒ page 98
- ❑ Removing and installing ⇒ page 102

7 - Securing ring

- ❑ Must be renewed if removed

8 - Piston pin

- ❑ Apply engine oil before installing

9 - Piston

- ❑ Installing with piston installation sleeve -T40347- ⇒ page 98
- ❑ Installation position: arrow on piston crown faces towards pulley end
- ❑ Mark allocation to cylinder
- ❑ Checking pistons and cylinder bores ⇒ page 100

10 - Compression rings

- ❑ Offset gaps by 120°
- ❑ Installation position in connection with two-part oil scraper ring: the lettering “TOP” or “R” should point upwards to the piston crown
- ❑ Install compression rings ⇒ page 97
- ❑ Assignment and installation position in connection with three-part oil scraper ring ⇒ page 97
- ❑ Check gap clearance ⇒ page 100
- ❑ Checking ring-to-groove clearance ⇒ page 101 .

11 - Oil scraper ring

- ❑ 2 or 3 parts, depending on version
- ❑ Install in such a way that upper gap of three-part oil scraper ring is offset by 120° relative to adjacent compression ring
- ❑ Checking ring gap ⇒ Fig. ““Checking end clearance”“ , page 100 .
- ❑ Checking ring-to-groove clearance ⇒ page 101 .
- ❑ Installing oil scraper ring, three-part ⇒ page 97
- ❑ Allocation of piston rings in connection with three-part oil scraper ring ⇒ page 97

Assignment of the piston ring in connection with three-part oil scraper ring

1 - Compression ring with chamfer -arrow A- within the upper part. The marking »TOP« or the lettering points upwards

2 - Compression ring, shoulder -arrow B- on the outside of the lower part. The marking »TOP« or the lettering points upwards

3 - Three-part oil scraper ring

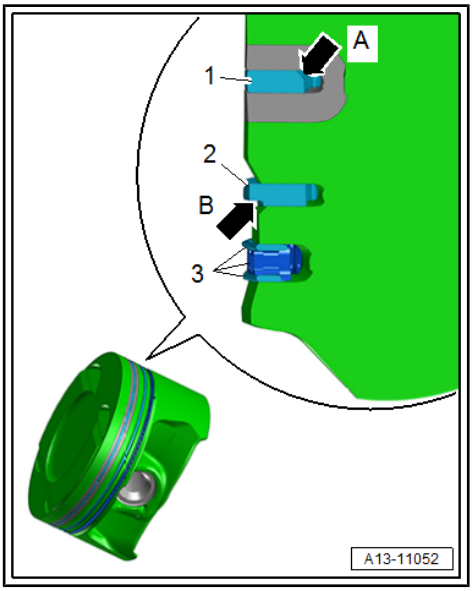

Installing compression rings

- »TOP« marking and lettering point upwards.
- Compression ring -2- should not be opened using piston ring pliers -VAS 211 003- any further than necessary to just push it over piston -1-.

Install the three-part oil scraper ring

– Note installation position of spring:

- The cuts of the plates -2, 3- and the spring -1- must be displaced by a minimum of 90° to one another.

– Install by hand.

Fitting order:

1. Insert spring -1- into groove.
2. Insert lower plate -3- into groove.
3. Insert upper plate -2- into groove.

- Offset upper cut of the tree-part oil scraper ring by 120° to next compression ring.

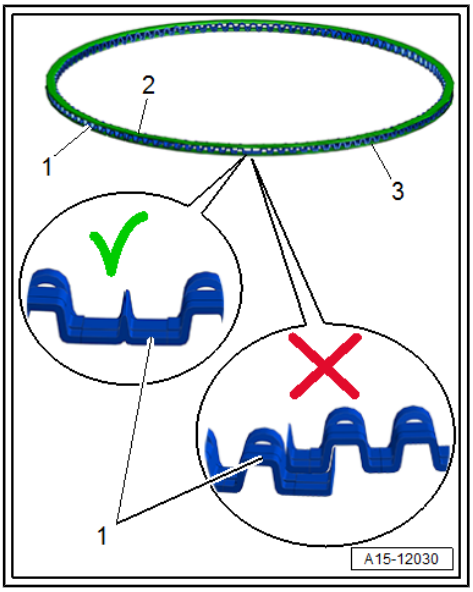

Installation position of bearing shell

– Position bearing shells in centre of conrod and conrod bearing cap when fitting.

Dimension -a- must be identical on both sides.

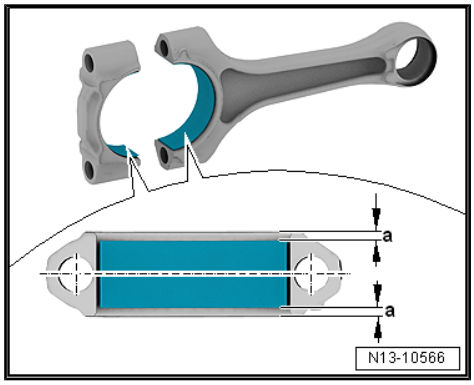

Oil injector - installation position

- The side wall of the oil spray jet -1- must lie parallel to the neighbouring crankshaft bearing -2-.
- Dimension -a- = dimension -a-.

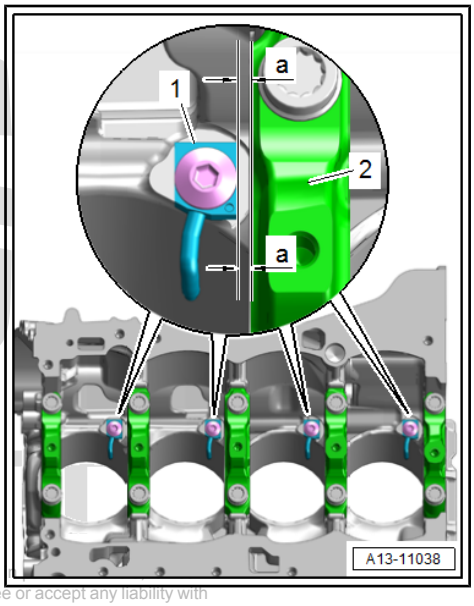

5.2 Removing and installing pistons

Note

If pistons with 3-part oil scraper ring are installed without the piston installation sleeve - T40347- , the oil scraper ring will be damaged.

Special tools and workshop equipment required

♦ Mandrel - VW 222 A-

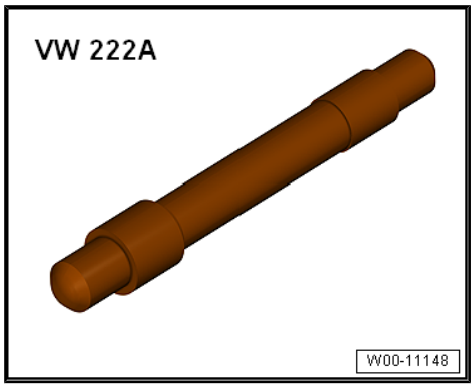

♦ Sleeve for installing the piston -T40347- , without illustration

Removing

– Remove engine, and secure it to engine and gearbox support - VAS 6095- ⇒ page 37 .

– Remove cylinder head ⇒ page 108 .

– Remove upper section of sump ⇒ page 208 .

– Mark installation position and cylinder number of piston.

– Mark installation position and cylinder number of conrod ⇒ Item 4 (page 95) .

– Remove conrod bearing cap and pull out piston and conrod upwards.

– Take circlip -2- out of piston pin boss.

– Use -- drift - VW 222A- to drive out piston pin 3.

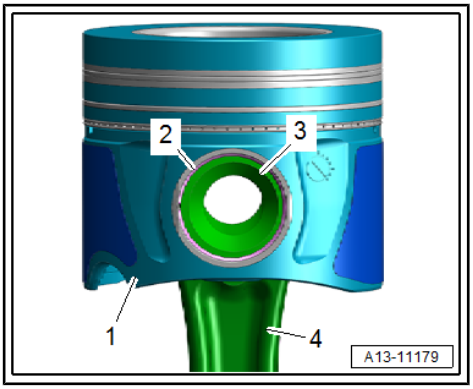

Note

If the piston pin is difficult to move, heat the piston to approx. 60° C.

– Remove piston -1- from conrod -4-.

Installation

Installation is carried out in the reverse order; note the following:

- Renew bolts that are tightened with turning further angle after each removal.
- Arrow on piston crown points to belt pulley end.

– Install oil scraper ring: procedure for 3-part oil scraper ring ⇒ page 97

– Install compression rings ⇒ page 97

– Oil running surfaces of bearing shells.

– Oil contact surfaces of bearing shells and cylinder wall with engine oil.

– Carefully push piston -1- into cylinder -arrow- by hand using piston installation sleeve -T40347- .

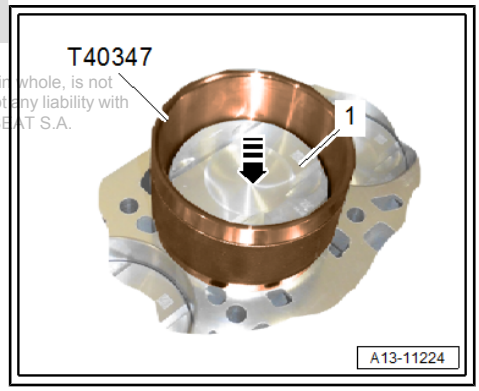

– Install conrod bearing cap; note installation position ⇒ Item 2 (page 95) .

– Installing the cylinder head ⇒ page 108 .

– Install sump (top section) ⇒ page 208 .

Specified torques

♦ ⇒ “5.1 Exploded view - pistons and conrods”, page 95

5.3 Checking pistons and cylinder bores

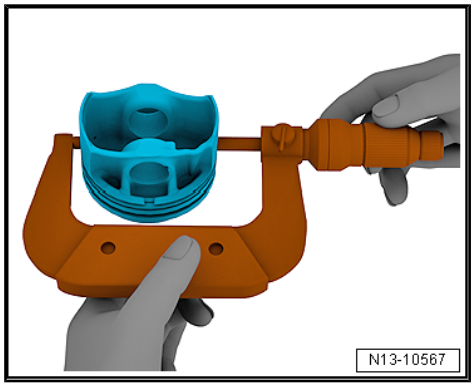

Checking piston

Special tools and workshop equipment required

- ♦ External micrometre 75 - 100 mm - VAS 6071-
- – Using a micrometer, measure approx. 15 mm from the lower edge, perpendicular to the piston pin axis.
- ♦ Difference between actual and nominal diameter max. 0.04 mm.

		Piston ∅
Basic dimension	mm	82.42 [1]
• [1] Dimensions without graphite coating (thickness 0.02 mm). The graphite coating is used up gradually.		

Checking end clearance

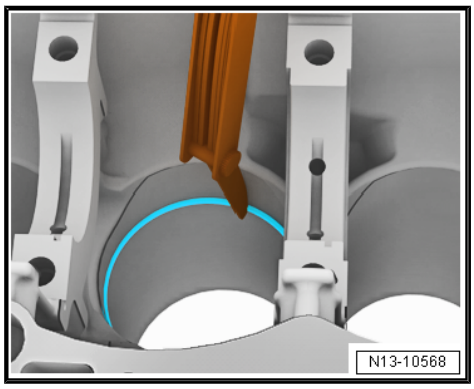

- – Push ring at right angles to cylinder wall from above down to approx. 15 mm from bottom end of cylinder. Use a piston without rings to push ring into bore.

Piston ring gap in connection with two-part oil scraper ring	New	Wear limit
1st compression ring	0.30 ... 0.40	0.80
2nd compression ring	0.40 ... 0.50	0.80
Oil scraper ring	0.20 ... 0.40	0.80

Piston ring gap in connection with three-part oil scraper ring	New	Wear limit
1st compression ring	0.30 to 0.40 mm	0.60 mm
2nd compression ring	0.40 to 0.50 mm	0.70 mm
Oil scraper ring	Cannot be measured	Cannot be measured

Checking ring-to-groove clearance

– Clean groove in piston before checking clearance.

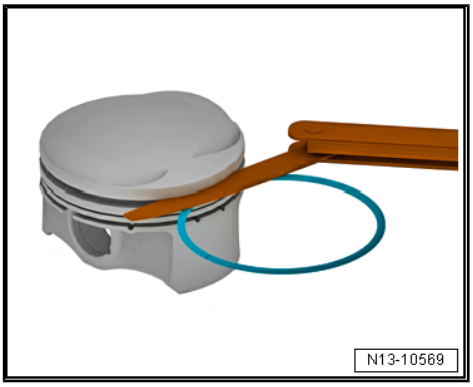

Ring-to-groove clearance in connection with two-part oil scraper ring	New	Wear limit
1st compression ring	0.06 to 0.09 mm	0.20 mm
2nd compression ring	0.03 to 0.06 mm	0.15 mm
Oil scraper rings	Cannot be measured	

Ring-to-groove clearance in connection with three-part oil scraper ring	New	Wear limit
1st compression ring	Cannot be measured	
2nd compression ring	Cannot be measured	
Oil scraper rings	Cannot be measured	

Checking cylinder bores

Note

Measuring the cylinder bores must not be done when the cylinder block is mounted to the engine and gearbox stand - VAS 6095- , as incorrect measurements may result.

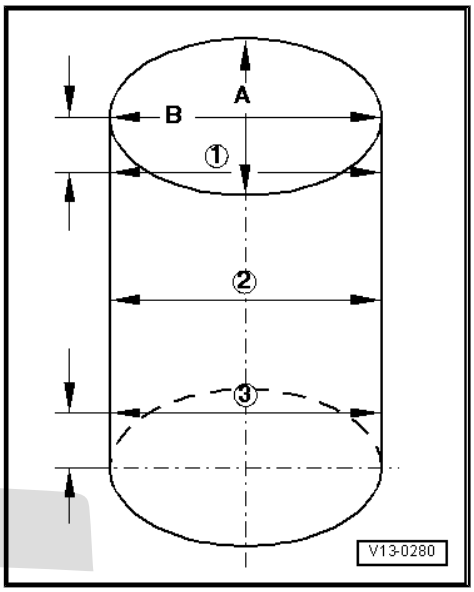

Special tools and workshop equipment required

♦ Cylinder gauge - VAS 6078-

CAUTION

Risk of damage to the surface of the cylinder bore caused by incorrect machining.

– **Do not machine cylinder bore (reboring, honing, grinding) with workshop equipment.**

– Take measurements at 3 positions in both lateral direction -A- and longitudinal direction -B-.

♦ Deviation from nominal dimension: max. 0.08 mm

	Piston ∅	Cylinder bore ∅
Basic dimension mm	82.42 1)	82.51

• 1) Dimensions without graphite coating (thickness 0.02 mm). The graphite coating wears away.

5.4 Separating parts of new conrod

On new conrods it is possible that the breaking point is not fully separated. If the conrod bearing cap cannot be removed by hand, proceed as follows:

– Label conrod according to the corresponding cylinder ⇒ Item 4 (page 95) .

– Clamp conrod -1- in a vice below the dashed line using aluminium vice clamps.

– Unscrew both bolts -2- about 5 turns.

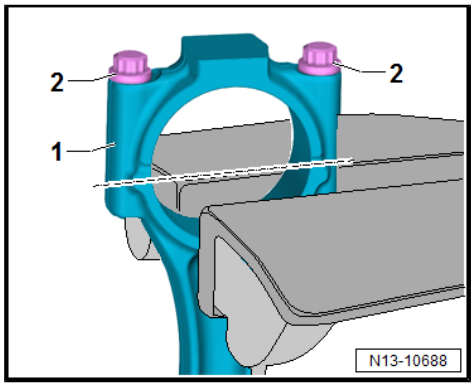

– Using a plastic hammer, carefully knock against conrod bearing cap in -direction of arrow- until it is loose.

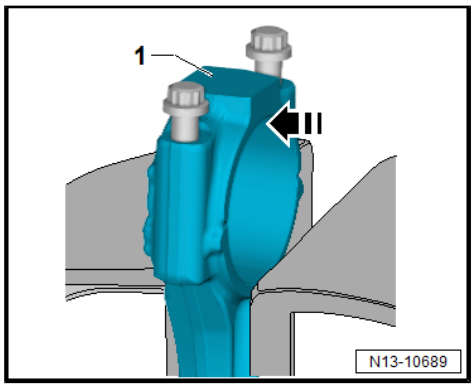

5.5 Checking radial clearance of conrod bearings

Special tools and workshop equipment required

♦ Plastigage

Working sequence

– Remove conrod bearing cap.

– Clean bearing cap and bearing journal.

– Place a length of Plastigage corresponding to the width of the bearing on the bearing journal or on the bearing shell.

– Fit conrod bearing cap and secure with old bolts ⇒ Item 1 (page 95) without rotating crankshaft.

– Remove conrod bearing cap again.

– Compare width of Plastigage with the measurement scale.

Radial clearance:

- New: 0.02 ... 0.06 mm.
- Wear limit: cut back 0.09 mm.

– Renew conrod bolts.

5.6 Removing and installing oil spray jets

Special tools and workshop equipment required

♦ Socket wrench - T10545-

Note

The crankshaft must be removed to allow for removing the oil spray jet for cylinder 4.

Removing

– Remove the noise insulation ⇒ chassis installation work, exterior; Rep. gr. 66 ; Noise silencer; installation overview - noise insulation .

– Remove upper section of sump ⇒ page 208 .

– Turn crankshaft via vibration damper securing bolt in direction of engine rotation until the respective bolt is accessible.

– Unscrew pressure relief valve -1- using bit - T10545- .

– Remove oil spray jets -2-.

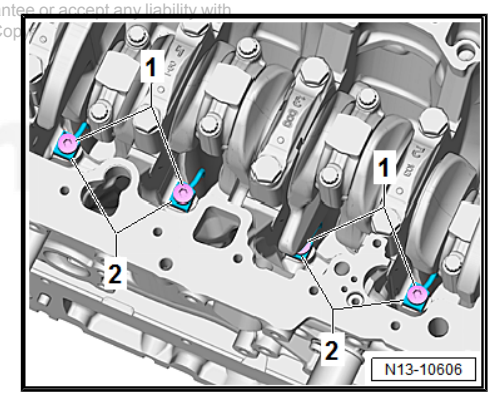

Fitting

CAUTION

Risk of damage to oil spray jets caused by deformation.

– Do not bend oil spray jets.

- The side wall of the oil spray jet -1- must be parallel to the crankshaft bearing -2-.
- Distance -a- = distance -a-.

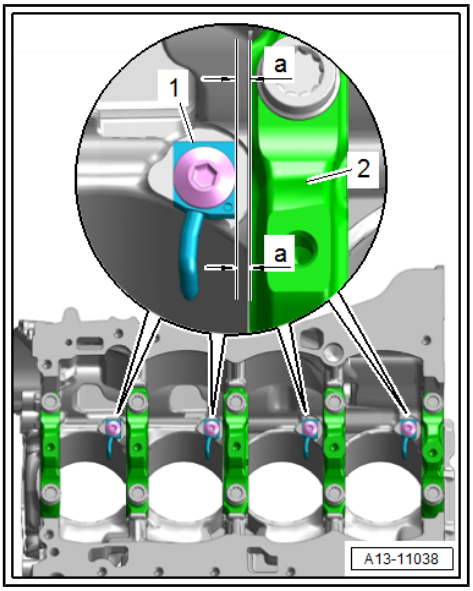

1 - Pressure relief valve - specified torque ⇒ Item 5 (page 96)

2 - Oil spray jet

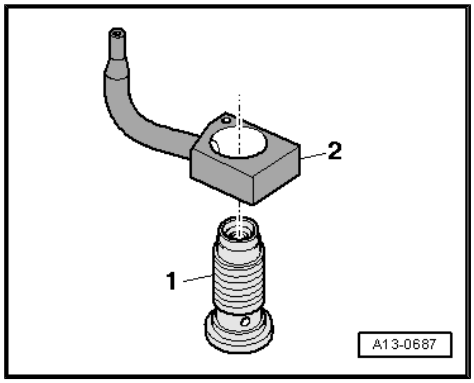

- Installation position: align leading edge of oil spray jet arrow with machined surface of cylinder block.

– Install sump (top section) ⇒ page 208 .

– Remove noise insulation ⇒ General body repairs, exterior; Rep. gr. 66 ; Noise insulation; Assembly overview - noise insulation .

15 – Cylinder head, valve gear

1 Cylinder head

⇒ “1.1 Exploded view - cylinder head”, page 105
⇒ “1.2 Removing and installing cylinder head”, page 108
⇒ “1.3 Removing and installing vacuum pump”, page 115
⇒ “1.4 Check compression pressure”, page 116

1.1 Exploded view - cylinder head

Note

- *Renew cylinder head bolts.*
- *Always renew self-locking nuts, bolts which have been tightened with turning further angle, as well as oil seals and gaskets.*
- *The plastic protectors fitted to protect the open valves must be removed only immediately before the cylinder head is fitted.*
- *After fitting a new cylinder head or cylinder head gasket, the engine oil and coolant must be changed.*

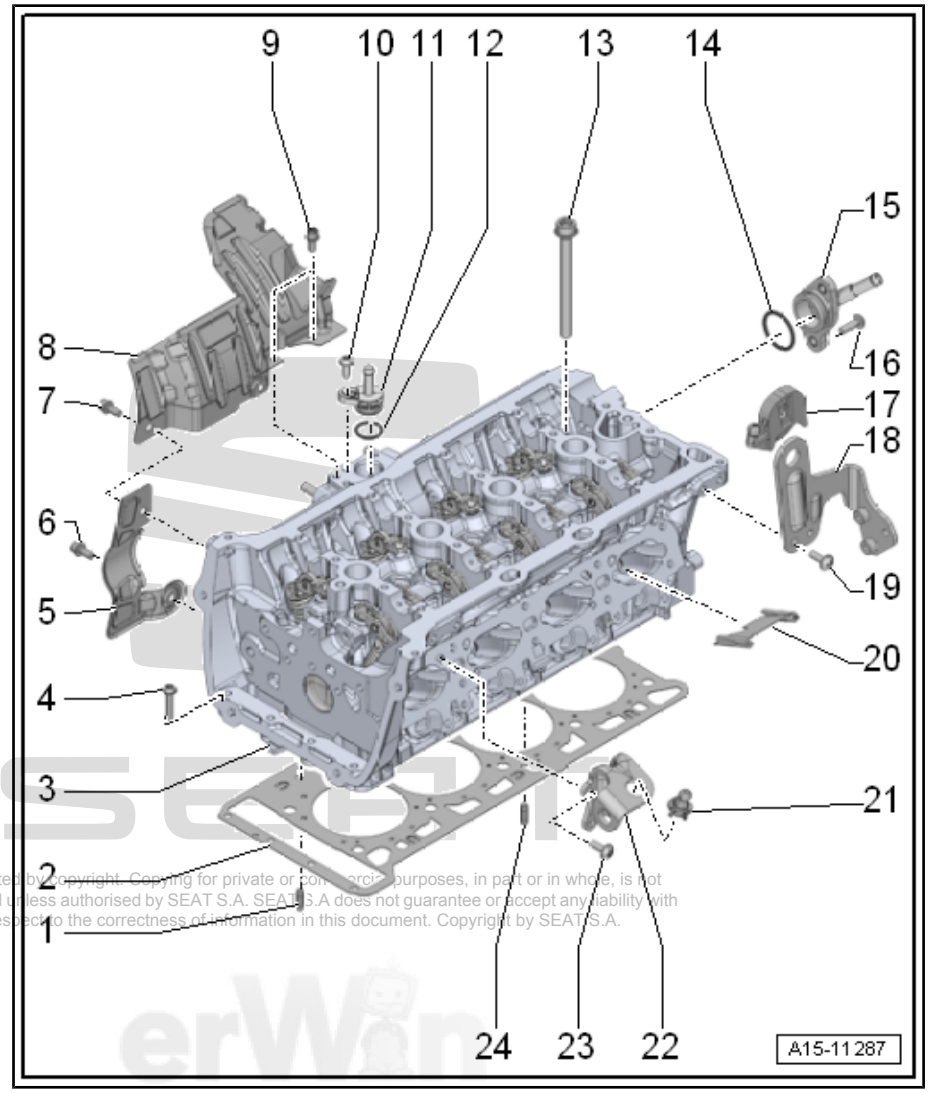

1 - Dowel pin

2 - Cylinder head gasket
- ❑ Renew after removal
- ❑ Observe installation position: parts number on cylinder head

3 - Cylinder head
- ❑ Removing and fitting ⇒ page 108
- ❑ check for deformation ⇒ page 107

4 - Bolt
- ❑ Renew after removing
- ❑ Note procedure when loosening ⇒ page 107
- ❑ Note procedure when tightening ⇒ page 107
- ❑ 8 Nm + turn 90° further.

5 - Shield

6 - Bolt
- ❑ 9 Nm

7 - Bolt
- ❑ 9 Nm

8 - Shield

9 - Bolt
- ❑ 9 Nm

10 - Bolt
- ❑ 9 Nm

11 - Connection
- ❑ For coolant hose

12 - O-ring
- ❑ Renew after removing
- ❑ Lubricate with coolant

13 - Cylinder head bolt
- ❑ Renew after removal
- ❑ Note procedure when loosening ⇒ page 107
- ❑ Note procedure when tightening ⇒ page 107

14 - O-ring
- ❑ Renew after removing
- ❑ Lubricate with coolant

15 - Connection
- ❑ For coolant hose

16 - Bolt
- ❑ 9 Nm

17 - Support bracket
- ❑ For engine cover panel

18 - Engine lifting eye

19 - Bolt

- ❑ Renew after removing
- ❑ 8 Nm +90°

20 - Separation plate

21 - Ball stud

- ❑ For engine cover panel

22 - Engine lifting eye

23 - Bolt

- ❑ Renew after removing
- ❑ 8 Nm +90°

24 - Dowel pin

Slackening cylinder head bolts

– Remove bolts -arrows-.

– Loosen cylinder head bolts in the sequence -1 … 10-.

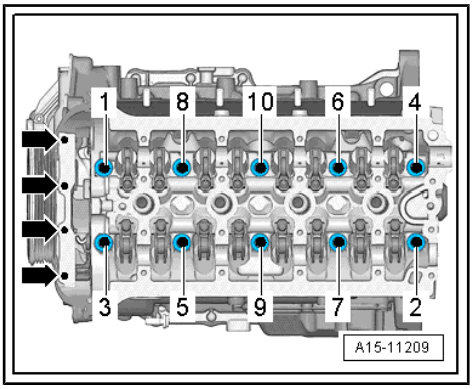

Tightening sequence for cylinder head

– Tighten cylinder head bolts in the sequence -1 ... 10- as follows:

Stage	Bolts	Specified torques/turning further angle
1.	-1 - 10-	Screw in by hand as far as stop
2.	-1 - 10-	50 Nm
3.	-1 - 10-	Turn 90° further
4th	-1 - 10-	Turn 90° further
5th	-arrows-	8 Nm
6.	-arrows-	Turn 90° further

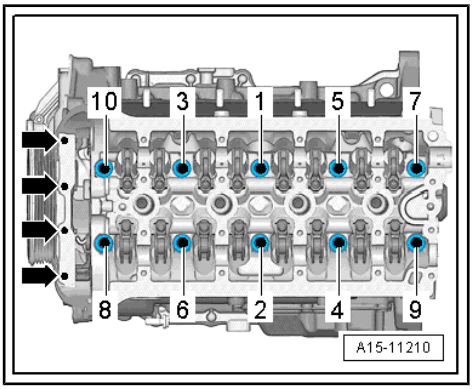

Checking cylinder head for distortion

– Use straight edge 500 mm - VAS 6075- and feeler gauge to measure cylinder head for distortion at several points.

♦ Max. permissible distortion: 0.05 mm

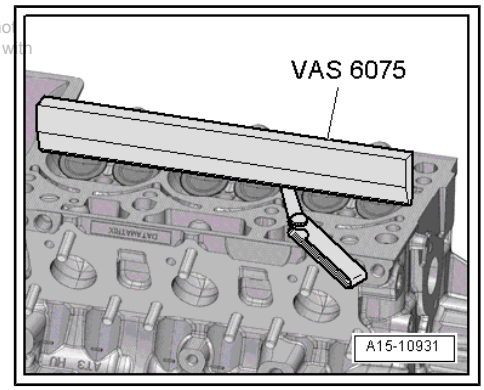

1.2 Removing and installing cylinder head

Special tools and workshop equipment required

- Sealing cap set for engine - VAS 6122-

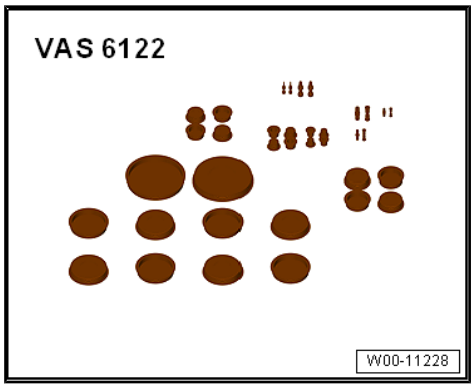

- Special wrench (Polydrive) - T10070-

Removing

Note

- *Before the cylinder head is removed, the engine support and engine mounting must be reinstalled temporarily, because the eyes of the support bracket are secured to the cylinder head.*
- *Fit the cable ties in the original position when installing.*
- *Seal open channels of intake and exhaust system with suitable plugs from engine sealing cap set - VAS 6122- .*
- *Cover the openings in the gearbox with a cloth to avoid letting coolant in the clutch housing.*

– Drain coolant ⇒ page 239 .

– Remove air filter housing ⇒ page 356 .

– Remove camshafts ⇒ page 158 .

– Remove catalytic converter ⇒ page 420 .

– Unscrew bolts -arrows- and nut -1-.
– Detach heat shield -2-.

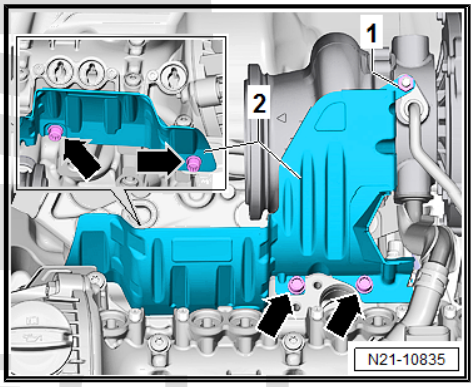

For vehicles with particulate filter

– Remove bolts -arrows- and nuts -1-.
– Remove heat shield -2-.

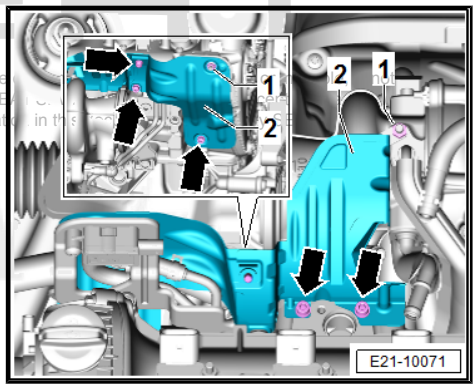

– Disconnect electrical connector -arrow-from pressure differential sender for particulate filter - G1037- .

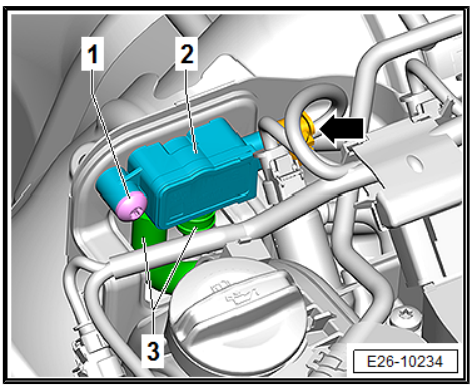

– Unscrew bolts -arrows- on bracket for pressure differential sender for particulate filter - G1037- -1-.
– Move bracket for pressure differential sender for particulate filter - G1037- -1- to the rear and tie it up.

Continued for all vehicles

– Remove lambda probe 1 before catalytic converter - GX10- ⇒ page 388 .

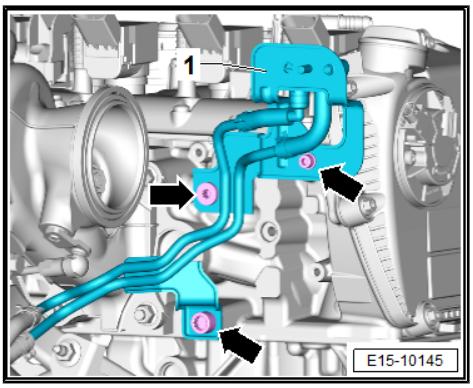

– Lay coolant hose -3- to one side.
– Unscrew bolts -1-.
– Release locking lugs-arrow-, unclip air hose -2- from the front end and remove in -direction of the arrow-.

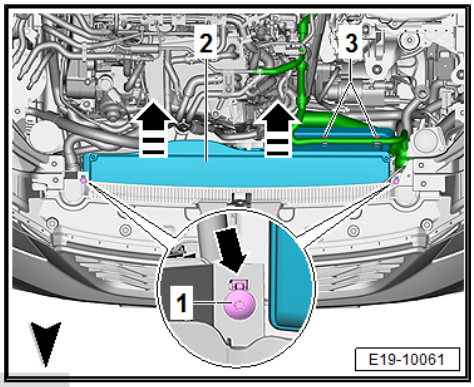

– Release hose clip -2- and detach air hose from charge air cooler.

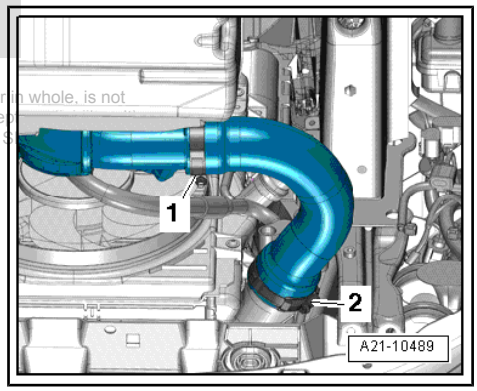

Note

Disregard -item 1-.

– Seal open lines and connections with clean plugs from engine bung set - VAS 6122- .

– Release the hose clamp -2-.
– Free coolant hose -3-.
– Remove bolts -arrows-.
– Unplug electrical connector -1- at charge pressure sender - G31- and detach air pipe (right-side).

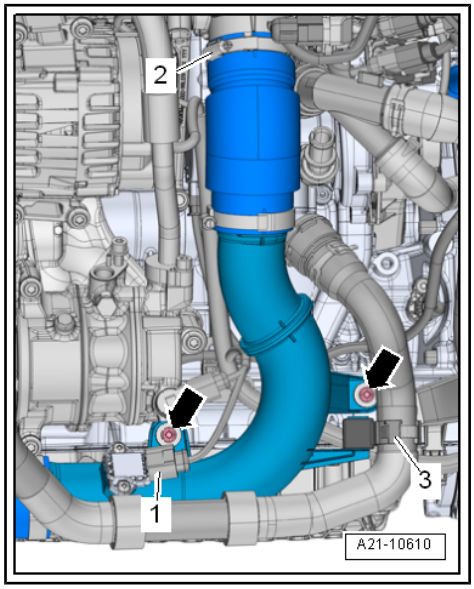

– Release hose clip -1- and detach air hose from charge air cooler.

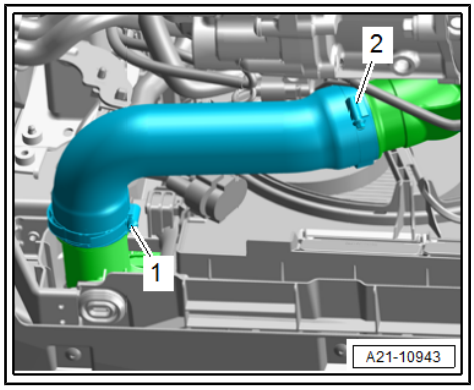

– Release hose clips -arrows- and detach coolant hoses.
– Swivel coolant line -1- to side.

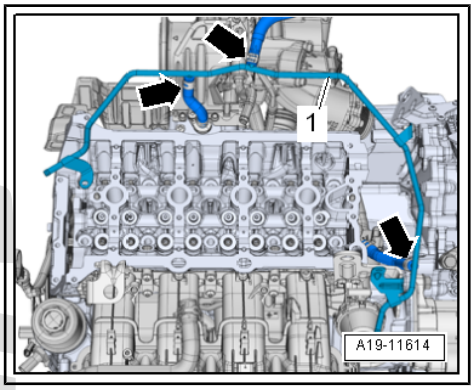

– Disconnect connectors -1, 2 and 3-.

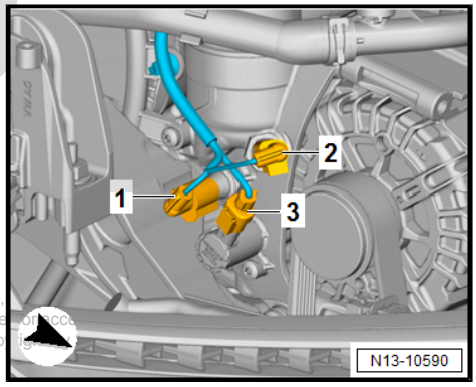

– Remove bolts -arrows-.

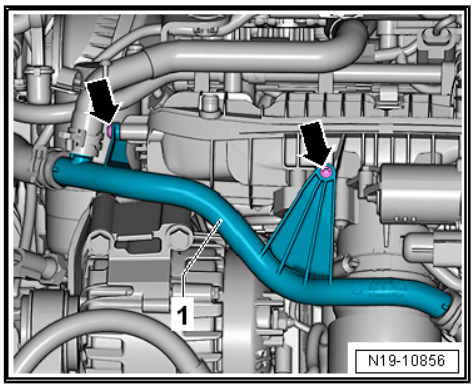

– Unscrew bolt -1- and nut -3- and remove bracket -2- for intake manifold.

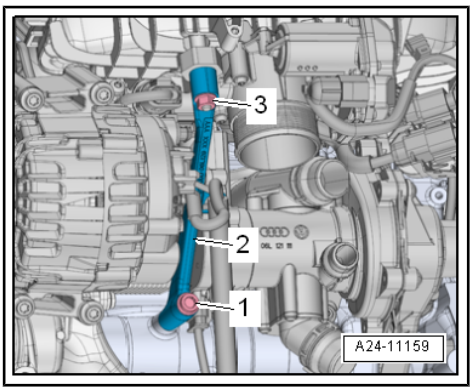

– Disconnect plug-in connectors:

1 - for throttle valve control unit - GX3-

2 - for intake manifold sender - GX9-

3 - For fuel pressure sender - G247-

– Detach electrical connector -4- from bracket.

– Move electrical wiring harness clear and press to one side.

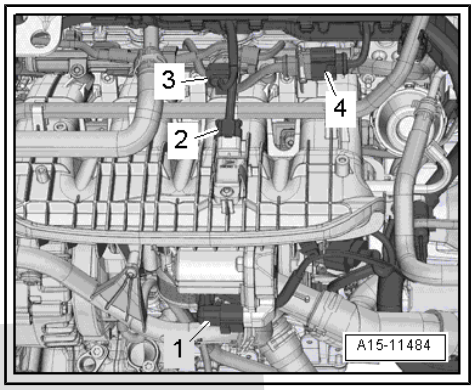

– Vehicles with auxiliary radiator (left-side): Move coolant hose -3- clear.

– Move electrical wiring harnesses -1, 2- clear at air pipe.

– Release the hose clamp -4-.

– Unscrew bolts -arrows- and detach air pipe downwards.

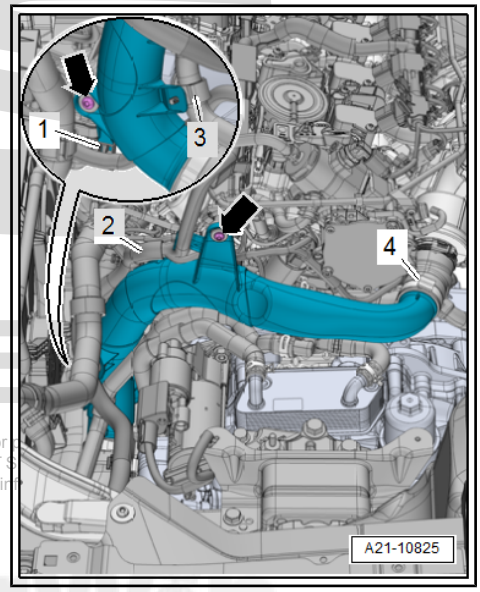

– Remove electrical connector -3- for knock sensor 1 - G61- from bracket and unplug connector.

– Disconnect connectors -2 and 4-.

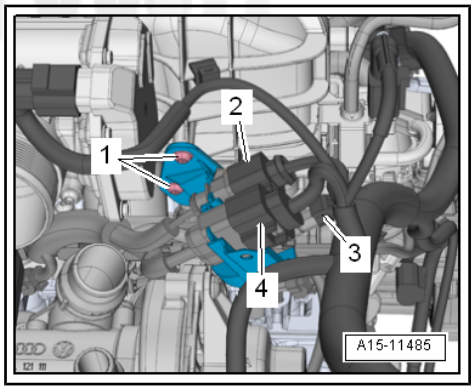

– Separate connectors and lay wiring harnesses to one side:

1 - For intake manifold flap valve - N316-

2 - For coolant shut-off valve - N82-

3 - for coolant temperature sender - G62-

4 - For stage 3 oil pressure switch - F447-

– Remove bolts -arrows-.

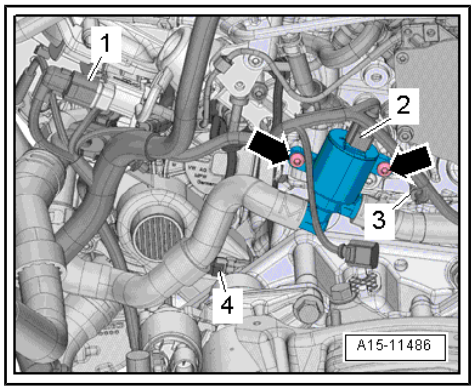

– Remove bolt -1- and loosen bolt -3-.
– Remove bracket -2- for turbocharger.

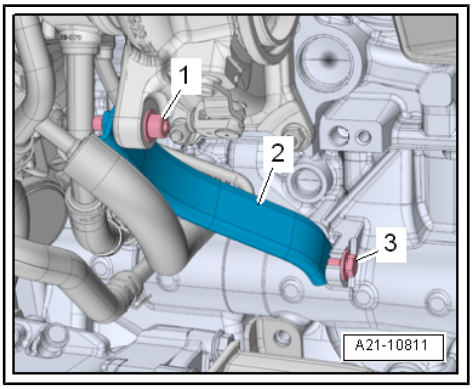

– Remove nuts -arrows-.
– Detach turbocharger from cylinder head and tie up to rear.

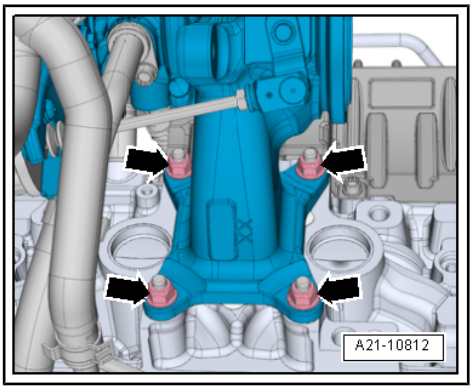

– Remove bolts -arrows-.

– Use special wrench (Polydrive) - T10070- to remove cylinder head bolts in the sequence -1 ... 10-.

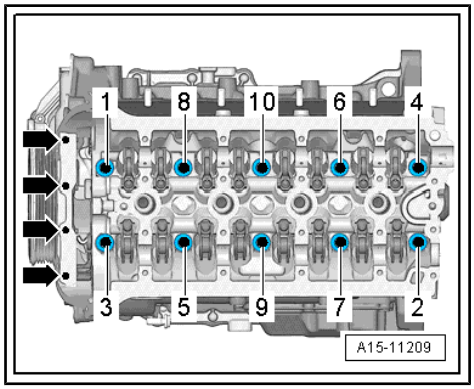

Note

- *Make sure all hoses/pipes and wiring are removed.*
- *Ensure tensioning rail and guide rail are not damaged when lifting off cylinder head.*

– Remove cylinder head.

– Place cylinder head onto soft surface (foam plastic).

• Seal open channels of intake and exhaust gas lines with a clean cloth or carefully cleaned plugs from engine bung set - VAS 6122- .

Installing

Note

- *Replace bolts that are tightened with specified tightening angle.*
- *Gaskets, oil seals and self-locking nuts must be renewed*
- *Hose connections and air duct pipes must be free of oil and grease before assembly.*
- *Secure all hose connections with the correct type of hose clips (same as original equipment) ⇒ Electronic parts catalogue .*
- *Spray the worm screws of the used hose clips with penetrating spray before installing.*

– Do not remove the new cylinder head gasket from its packaging until just before installation. The silicon coating and the ribbed area of the cylinder head gasket must not be damaged.

– Carefully remove sealant residue from cylinder head and cylinder block. Ensure that no long scores or scratches are made on the surfaces, while doing so. Carefully remove emery and abrasive remains.

– Clean blind holes for cylinder head bolts. Blow out with compressed air if necessary.

– Position cylinder head gasket.

◆ Note position of centralising pins in cylinder block -arrows-.

◆ Note installation position of cylinder head gasket. Part No. should be legible from inlet side.

– If crankshaft has been rotated: set No. 1 cylinder piston to top dead centre and then turn crankshaft back slightly. When doing so, ensure that timing chain is not damaged.

– Insert cylinder head bolts, and tighten them by hand.

– Insert the cylinder head.

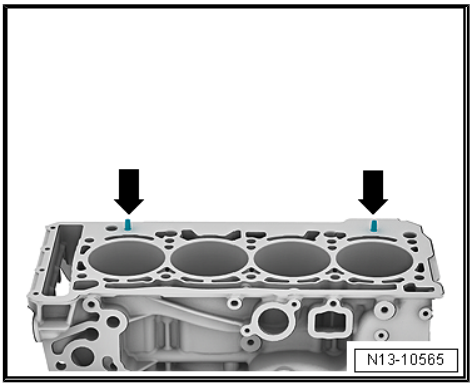

Note

After repair work it is not necessary to retighten the cylinder head bolts.

– Insert and tighten cylinder head bolts. Tightening sequence ⇒ Fig. ""Tightening sequence for cylinder head"", page 107 .

– Install camshafts, but do not fit camshaft timing chain yet ⇒ page 165 .

– Support engine in its installation position again ⇒ page 51 .

– Removing engine mounting and engine support.

– Now, install camshaft timing chain ⇒ page 168 .

Installation is carried out in reverse order of removal. The following should be observed:

– Change engine oil ⇒ Maintenance ; Booklet ; Engine oil: Draining; Renewing oil filter and replenishing engine oil .

– Filling with new coolant ⇒ page 239 .

– After new components have been installed (engine/short engine, cylinder head or turbocharger) the oil pressure control must be set to max. pressure for approx. 1000 km if the function is available in the engine control unit. This will compensate for the increased friction during run-in of new components, and a better transport of wear-related particles is guaranteed. To do this, connect vehicle diagnostic tester, switch on ignition, and select the following menu option:

◆ If available, select the function `0001 - Engine run-in oil pressure`.

Specified torques

◆ ⇒ "1.1 Exploded view - cylinder head", page 105

◆ ⇒ "4.1 Exploded view - intake manifold", page 358

◆ ⇒ "3.1 Exploded view - coolant pipes", page 287

◆ ⇒ "1.1 Exploded view - turbocharger", page 307

◆ ⇒ "1.1 Exploded view - silencers", page 391

◆ ⇒ Electrical system; Rep. gr. 97 ; relay carrier, fuse holder, electronic boxes; relay carrier, fuxe holder, electronic boxes - overview of the installation locations

1.3 Removing and installing vacuum pump

Removing

– Remove engine cover panel ⇒ page 57 .

– Remove air filter housing ⇒ page 356 .

– Disconnect vacuum hose -2-.

– Press release tabs on vacuum hose -1-, and remove hose from vacuum pump.

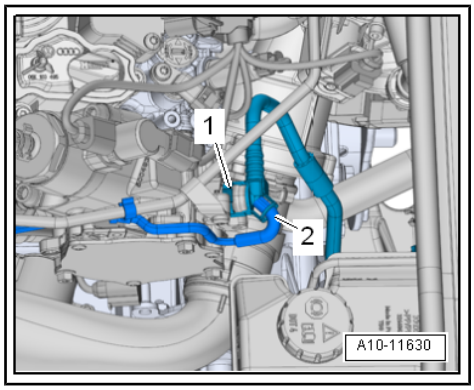

– Release fastener -arrow-, detach wiring duct upwards from bracket and press forwards.

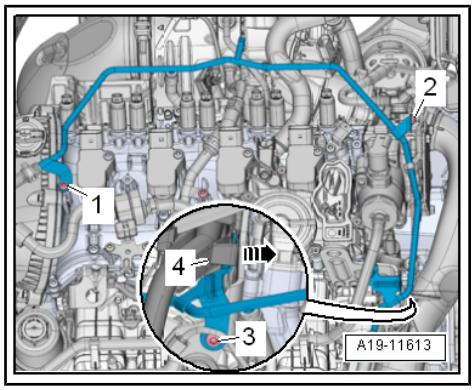

NOTICE

Risk of damage to coolant pipes caused by deformation.

– **Never attempt to reshape the coolant pipe.**

– Unscrew bolts -1, 2 and 3-, and carefully swivel coolant line to one side slightly.

– Remove high-pressure pump with »roller tappet« ⇒ page 381 .

– Unscrew bolts -arrows-, and pull off vacuum pump.

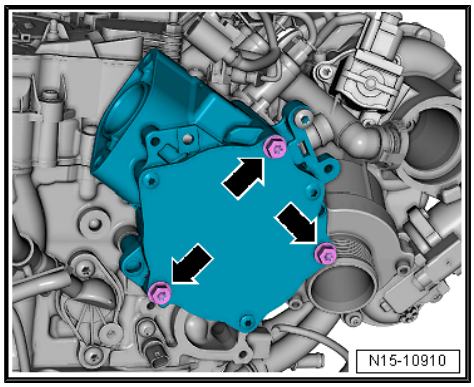

Note

The vacuum pump must not be dismantled.

Fitting

– Clean sealing surfaces.

– Turn driver of vacuum pump so that it engages in the groove of the camshaft when the vacuum pump is fitted.

– Insert new sealing ring into the vacuum pump, insert 2 screws and place the vacuum pump on the cylinder head seal.

– When doing so, ensure that it lies flush against the flange.

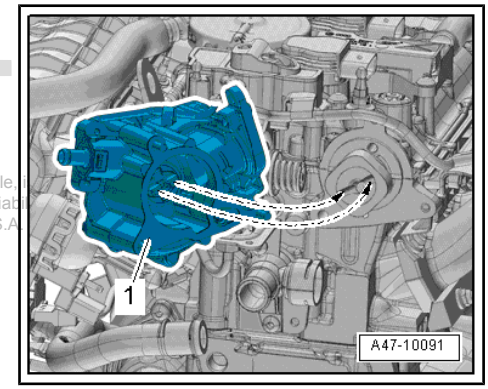

Continue installation following reverse order for removing.

Specified torques

◆ ⇒ “4.1.2 Assembly overview - valve gear, part II ”, page 156

1.4 Check compression pressure

Special tools and workshop equipment required

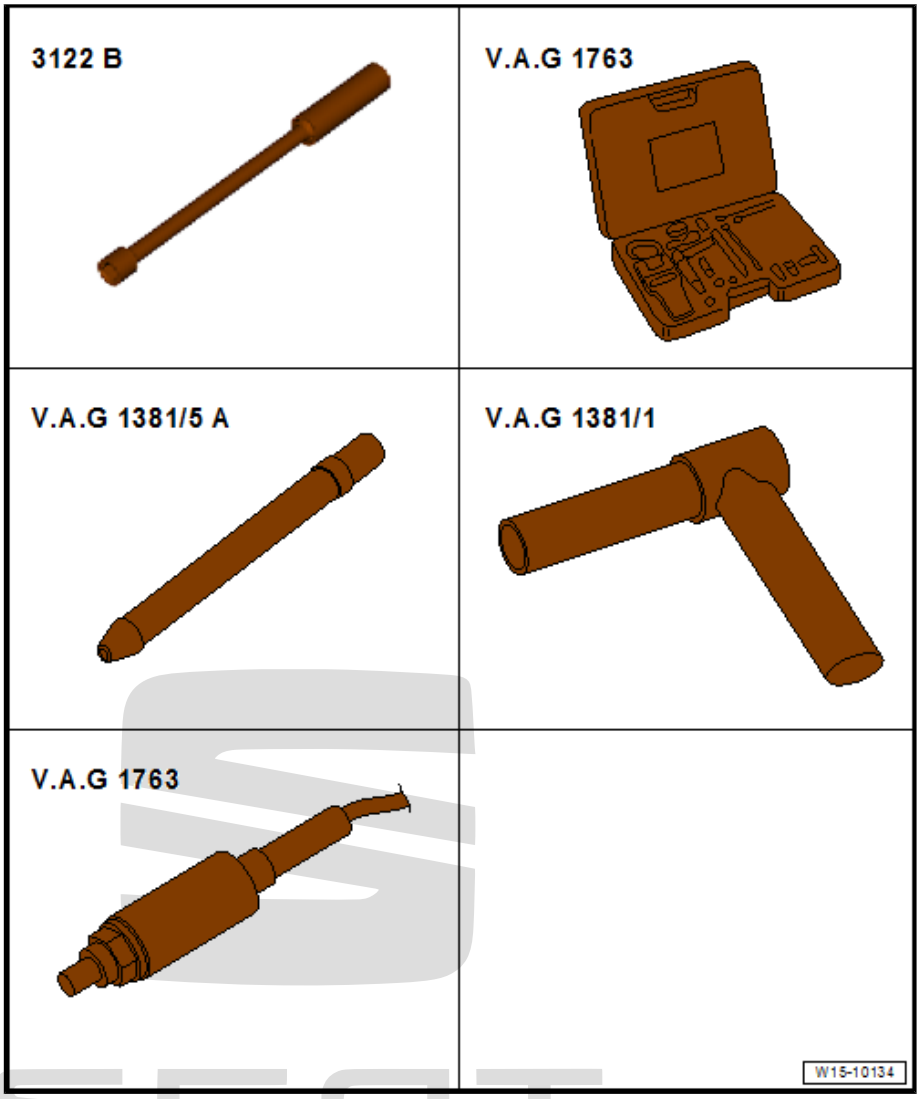

- Spark plug socket and extension - 3122 B-
- Compression tester - V.A.G 1763-
- Adapters - V.A.G 1381/1-
- Adapters - V.A.G 1381/5A-

Test procedure

Note

- *Min. engine oil temperature: 30 °C*
- *Min. battery voltage: 12.7 V*

– Remove engine cover panel ⇒ page 57 .

– Release electrical connectors at ignition coils and unplug from ignition coils simultaneously.

– Remove bolts for ignition coils and pull out ignition coils.

– Unplug electrical connectors:

1 - For injectors -N30- ... -N33-

2 - For injectors 2 -N532- ... -N535-

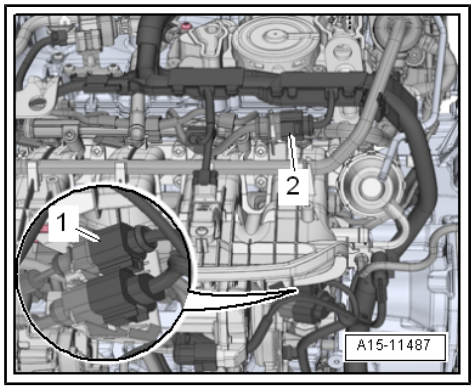

– Unscrew spark plugs with spark plug spanner - 3122 B- .

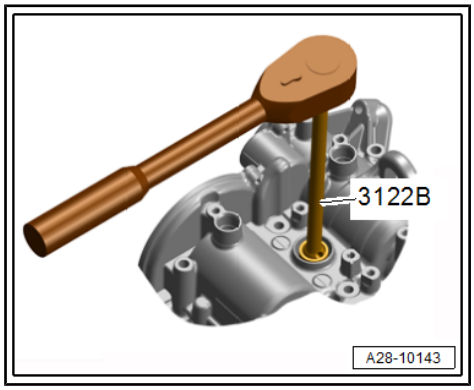

– Check compression using compression tester - V.A.G 1763- , adapter - V.A.G 1381/1- and adapter - V.A.G 1381/5A- .

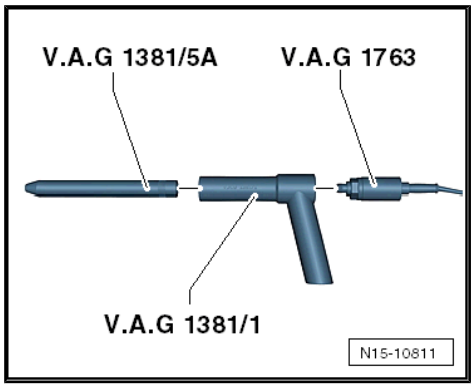

Note

Use of the testing equipment ⇒ Instructions .

– Start engine until tester shows no further pressure increase.

Compression pressure	bar
New	11.0 - 14.0
Wear limit	7.0
Maximum difference between cylinders	3.0

– Install glow plugs ⇒ Maintenance ; Booklet 501 .

– Install ignition coils ⇒ page 452 .

Note

Faults will have been stored in the memory because connectors have been unplugged. Interrogate and, if necessary, erase event memory after completing the check.

– Switch on ignition and select the following menu item in the vehicle diagnostic and service information system :

♦ `0001 - Generate readiness code`

2 Timing chain cover

⇒ "2.1 Assembly overview - timing chain cover", page 119

⇒ "2.2 Removing and installing timing chain cover", page 121

2.1 Assembly overview - timing chain cover

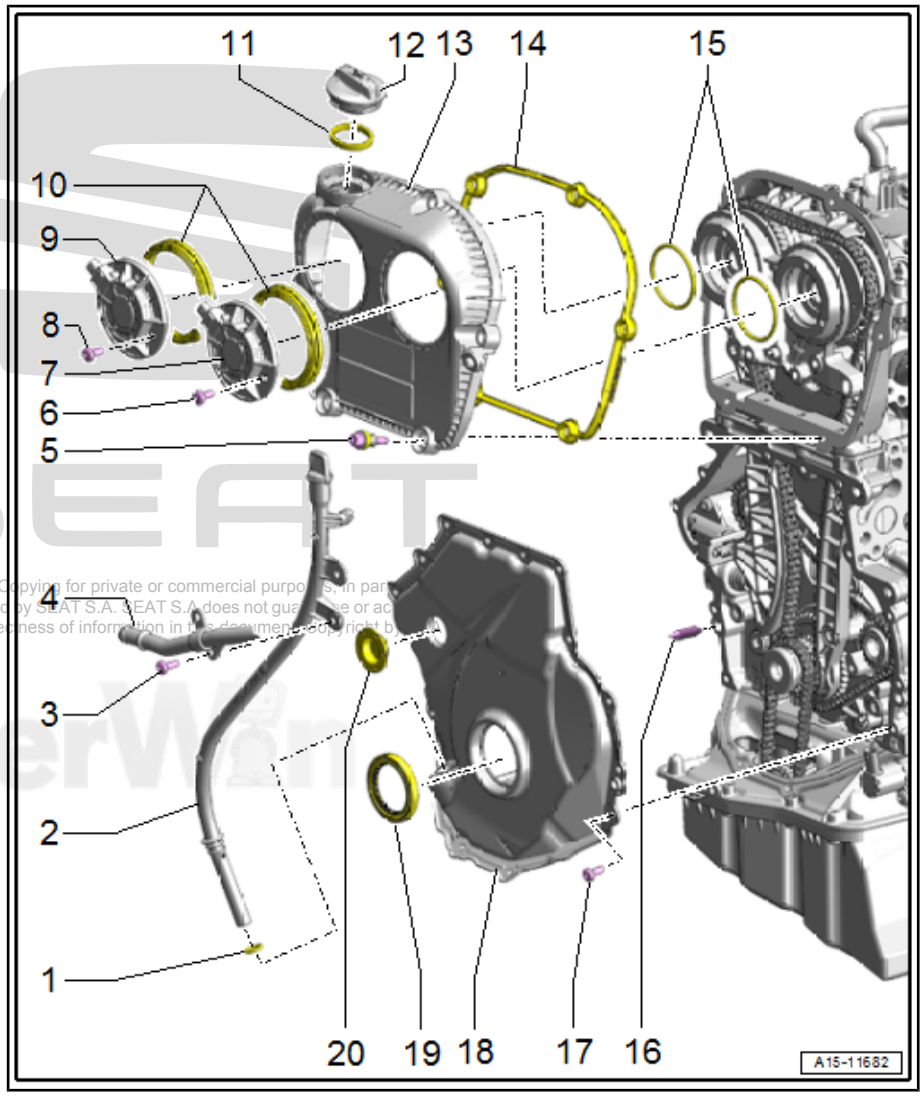

1 - O-ring
- ❑ Must be renewed if removed
- ❑ Lubricate before fitting

2 - Guide tube for oil dipstick
- ❑ Engages in the lower cover of the chain cover

3 - Bolt
- ❑ 9 Nm

4 - Front coolant pipe

5 - Bolt
- ❑ Tightening sequence ⇒ page 120

6 - Bolt
- ❑ 9 Nm

7 - Valve 1 for variable distribution - N205-
- ❑ Removing and fitting ⇒ page 186
- ❑ Renew O-ring ⇒ Item 15 (page 120)

8 - Bolt
- ❑ 9 Nm

9 - Exhaust camshaft control valve 1 - N318-
- ❑ Removing and installing ⇒ page 186
- ❑ Renew O-ring ⇒ Item 15 (page 120)

10 - Seals
- ❑ Must be renewed if removed
- ❑ Installation position: small inner diameter outwards
- ❑ For replacing the upper cover of the distribution chain ⇒ Item 13 (page 119)
- ❑ Lubricate before fitting

11 - Gasket
- ❑ Renew if damaged.

12 - Sealing cap

13 - Timing chain cover (top)
- ❑ Tightening sequence ⇒ page 120
- ❑ Removing and installing ⇒ page 121

14 - Gasket
- ❑ Renew if damaged.

15 - O-rings

- ❑ Must be renewed if removed
- ❑ Lubricate lightly with engine oil

16 - Pins

- ❑ Qty. 2
- ❑ For centering the cover

17 - Bolt

- ❑ Must be renewed if removed
- ❑ Tightening sequence for version with 15 bolts ⇒ page 126
- ❑ Tightening sequence for version with 8 bolts ⇒ page 127

18 - Lower timing chain cover

- ❑ With seal.
- ❑ Must be renewed if removed
- ❑ Removing and installing ⇒ page 123

19 - Radial oil seal

- ❑ For vibration damper
- ❑ Replace ⇒ page 70

20 - Sealing cap

- ❑ Must be renewed if removed

Timing chain cover (top) - tightening sequence

– Tighten bolts -1 to 6- in the sequence shown. For bolts -3- and -5- use the torque wrench - V.A.G 1783- and 10 mm open-end insert - V.A.G 1783/1- .

1. Tighten bolts to 9 Nm.

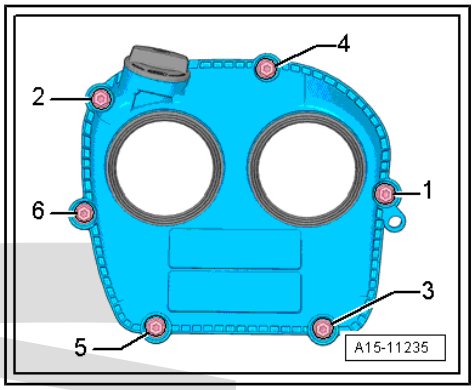

Lower timing chain cover – tightening sequence for version with 8 bolts

Note

Do not tighten bolts -1- and -4- with turning further angle until after the vibration damper has been installed. The bolts must be unscrewed again for installing the vibration damper. Observe differences in torque for steel and aluminium bolts!

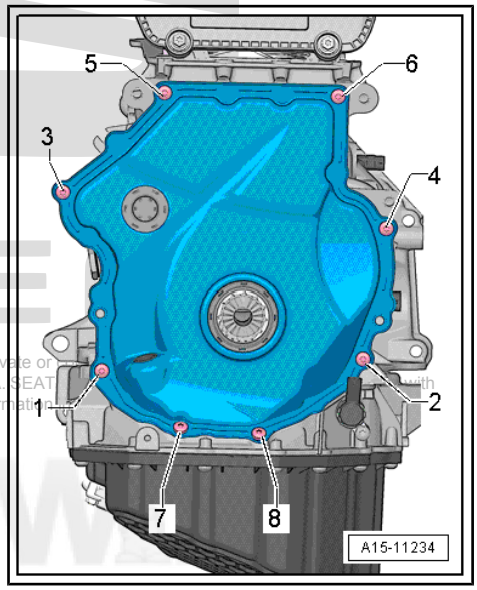

Stage	Steel bolts	Torque specification and turning further angle for steel bolts
1.	-1 - 8-	8 Nm
2.	-1 - 8-	45°

Stage	Aluminium bolts	Specified torque/turning further angle for aluminium bolts
1.	-1 - 8-	4 Nm
2.	-1 - 8-	45°

Lower timing chain cover – tightening sequence for version with 15 bolts

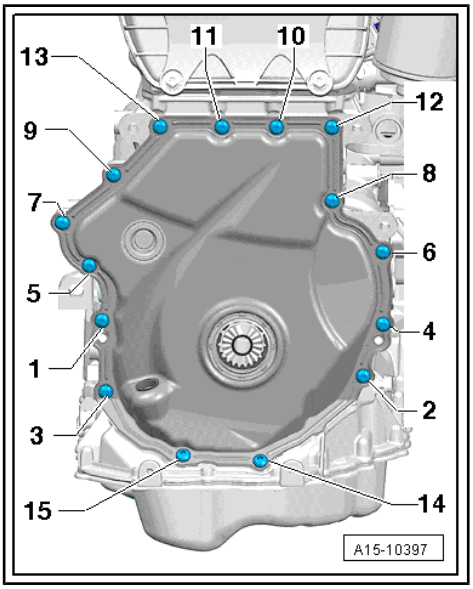

Note

Do not tighten bolts -3- and -6- with turning further angle until after the vibration damper has been installed. The bolts must be unscrewed again for installing the vibration damper. Observe differences in torque for steel and aluminium bolts!

Stage	Steel bolts	Torque specification and turning further angle for steel bolts
1.	-1 - 15-	8 Nm
2.	-1 - 15-	45°

Stage	Aluminium bolts	Specified torque/turning further angle for aluminium bolts
1.	-1 - 15-	4 Nm
2.	-1 - 15-	45°

2.2 Removing and installing timing chain cover

⇒ "2.2.1 Removing and installing timing chain cover (top)", page 121

⇒ "2.2.2 Removing and installing timing chain cover (bottom)", page 123

2.2.1 Removing and installing timing chain cover (top)

Special tools and workshop equipment required

- Hose clip pliers - VAS 6362-

- Torque wrench - V.A.G 1783-

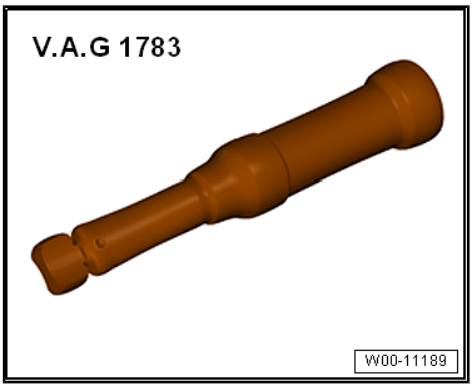

♦ Insertable tool with e/c 10 opening - V.A.G 1783/1-

Removing

- Engine cold.

– Open filler cap -arrow- of the coolant expansion tank briefly to relieve residual pressure in cooling system.

– Remove engine cover panel ⇒ page 57 .

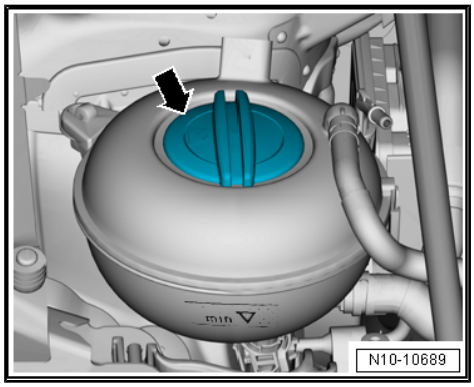

Vehicles with windscreen washer tank, right side

– Remove windscreen washer tank filler -2- ⇒ Electrical system; Rep. gr. 92 ; Windscreen washer system; Removing and installing tank for windscreen washer system .

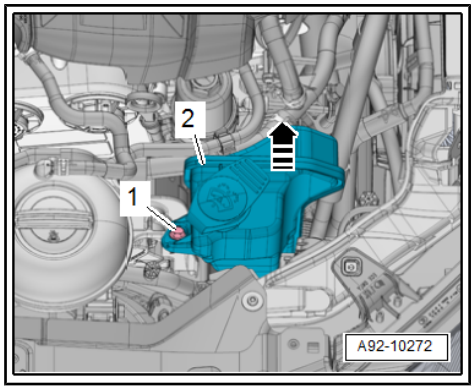

Continued for all vehicles

– Release hose clip -1-, disconnect coolant hose and push towards right.

– Disconnect hose -2- for activated charcoal filter (press release tab on hose) and move hose clear.

– Remove inlet camshaft control valve 1 - N205- / exhaust camshaft control valve 1 - N318- ⇒ page 186 .

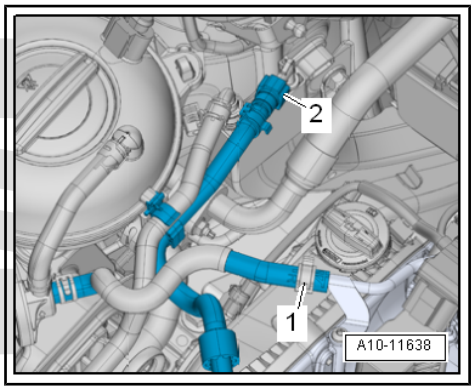

– Unscrew bolt -1-, and unclip wiring harness -2-.

– Unclip guide tube from timing chain cover (top) in direction of -arrow-.

– Slightly pull dipstick guide tube out of lower cover.

– Unclip wiring harness for camshaft control valves, and lay it to one side.

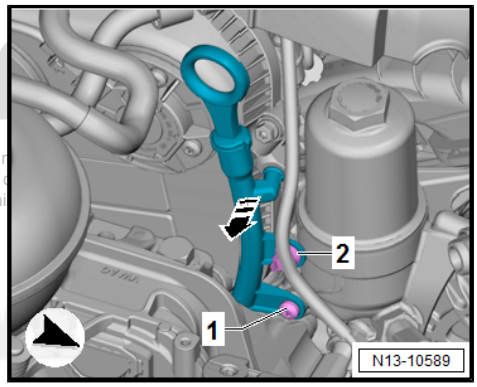

– Unscrew bolts -1 to 6- and remove timing chain cover (top).
– Remove bolts -3, 5- if necessary.

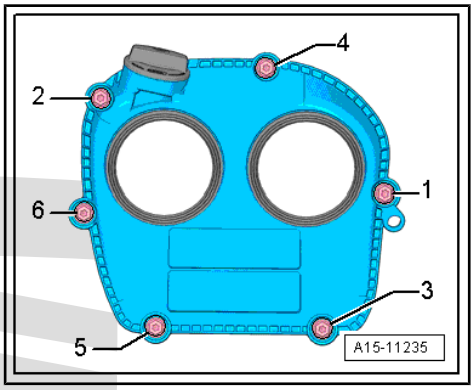

Installing

Install in the reverse order of removal, observing the following:

– Renew seals.
– Fit cover on cylinder head, and screw in bolts by hand. When doing so, ensure that cylinder head gasket is seated properly on cylinder head.
– Tighten bolts -1 to 6- in the sequence shown. For bolts -3- and -5- use the torque wrench - V.A.G 1783- and 10 mm open-end insert - V.A.G 1783/1- ⇒ page 120 .
– Install camshaft control valve 1 - N205- and exhaust camshaft control valve 1 - N318- ⇒ page 186 .
– Install engine cover panel ⇒ page 57 .
– Install the windscreen washer tank filler ⇒ Electrical system; Rep. gr. 92 ; Windscreen washer system; Removing and installing windscreen washer tank .

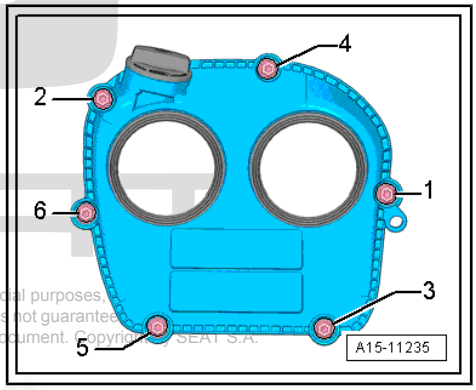

Specified torques

♦ ⇒ “2.1 Assembly overview - timing chain cover”, page 119

2.2.2 Removing and installing timing chain cover (bottom)

Note

Due to the adhesive strength of the sealant, the cover is bent when being removed. For this reason, the cover always needs be renewed.

Special tools and workshop equipment required

♦ Assembly tool - T10531-

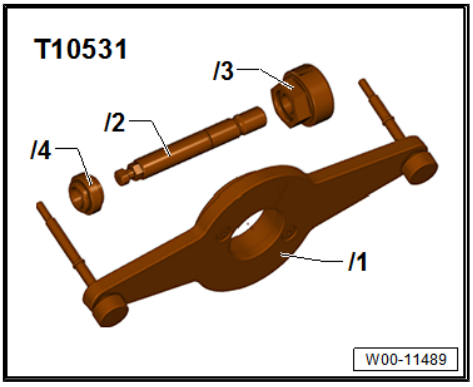

Removing

- Remove wheel housing liner (front right) ⇒ General body repairs, exterior; Rep. gr. 66 ; Wheel housing liners; Exploded view - wheel housing liner (front) .
- Remove engine support ⇒ page 69 .
- Remove vibration damper ⇒ page 61 .
- Drain engine oil ⇒ Maintenance ; Booklet 501 ; Engine oil: Draining; Renewing oil filter and replenishing engine oil .
- Remove valve for oil pressure control - N428- ⇒ page 231 .
- Remove tensioner for poly V-belt ⇒ page 61 .
- Move retaining clip -2- for electrical wiring harness clear.
- Unscrew bolt -1-.
- Unclip guide tube from timing chain cover (top) in direction of -arrow-.
- Pull guide tube for oil dipstick out of timing chain cover.

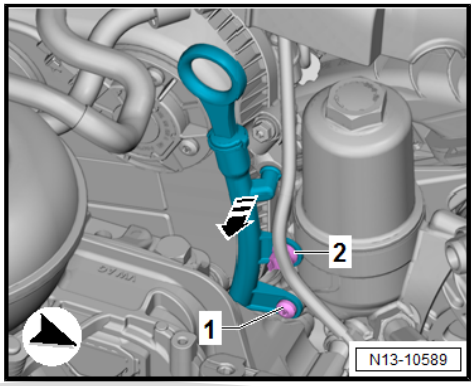

Cover with 8 bolts

- Unscrew bolts -1 … 8-.
- Lever lower timing chain cover off.

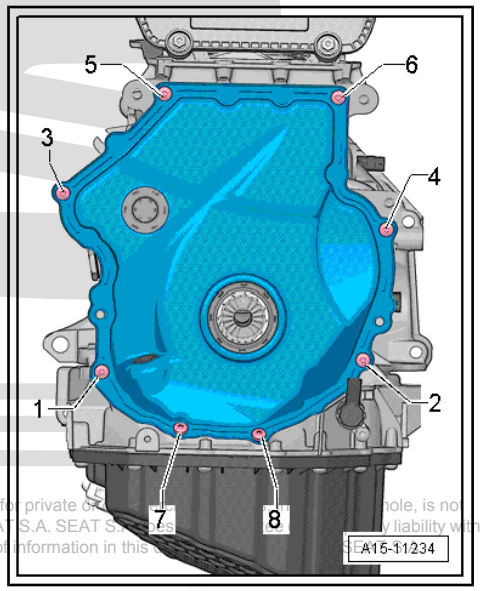

Cover with 15 bolts

– Unscrew bolts -1...15-.

– Prise off timing chain cover (bottom).

Fitting

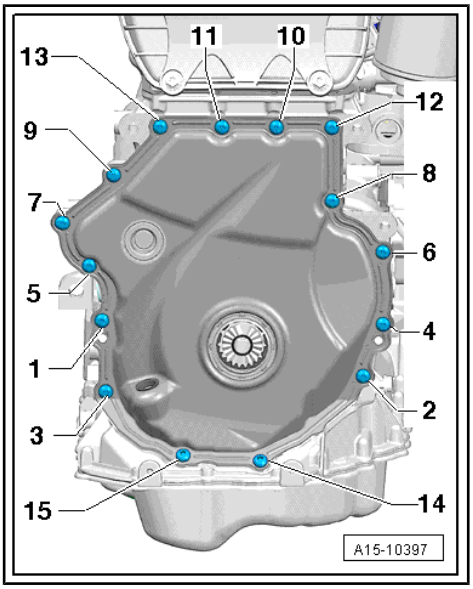

Note

- *Note the expiry date of the silicone sealant.*
- *Silicone sealant ⇒ Electronic Parts Catalogue (ETKA) .*
- *The cover must be installed within 5 minutes after applying the silicone sealant.*
- *Renew the bolts tightened with specified tightening angle.*
- *Renew seal and O-ring.*
- *Protect lubrication system against contamination. Cover open parts of engine.*

– Eliminate the remains of sealant paste from the cylinder head with a flat rasp.

– Clean surfaces; they must be free of oil and grease.

– Check that both dowel pins are fitted in cover -arrows-.

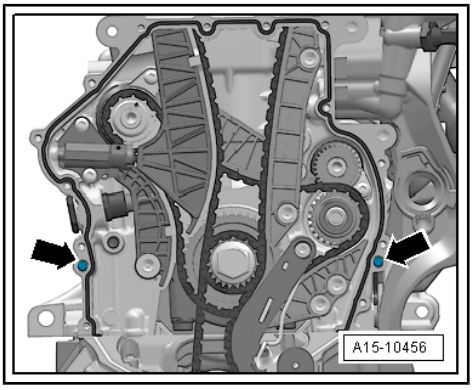

– Cut off nozzle of tube at front marking (nozzle dia. approx. 3 mm).

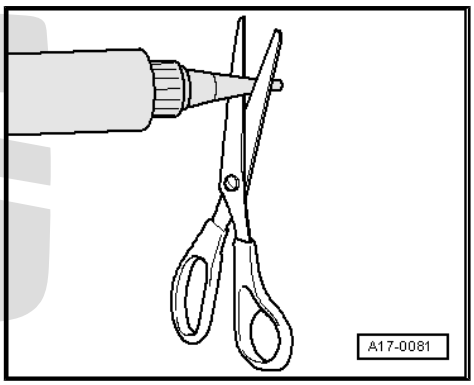

Tightening cover with 15 bolts

– Apply silicone sealant, as shown in the image, to the clean sealing surface -Arrow 1- and on the edges -arrows 2- of the new cover.

♦ Thickness of sealant bead: 2 to 3 mm.

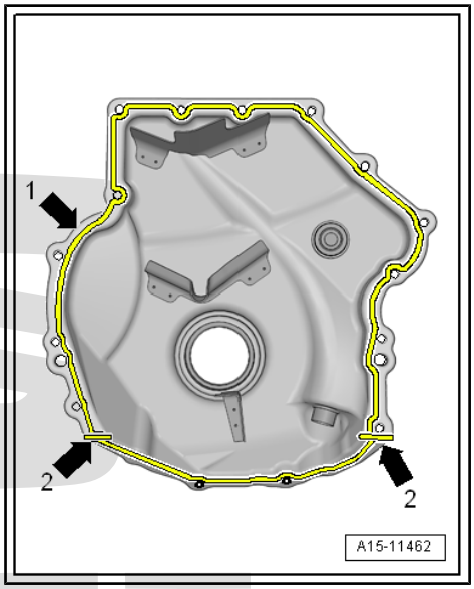

– Install cover immediately and tighten bolts.

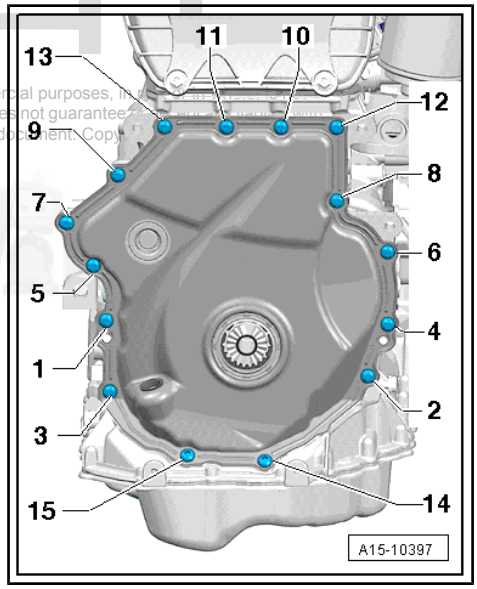

Note

Do not tighten bolts -3- and -6- with turning further angle until after the vibration damper has been installed. The bolts must be unscrewed again for installing the vibration damper. Observe differences in torque for steel and aluminium bolts!

Stage	Steel bolts	Torque specification and turning further angle for steel bolts
1.	-1 - 15-	8 Nm
2.	-1 - 15-	45°

Stage	Aluminium bolts	Specified torque/turning further angle for aluminium bolts
1.	-1 - 15-	4 Nm
2.	-1 - 15-	45°

Tightening cover with 8 bolts

– Apply silicone sealant, as shown in the image, to the clean sealing surface -Arrow 1- and on the edges -arrows 2- of the new cover.

• Thickness of sealant bead: 2 ... 3 mm.

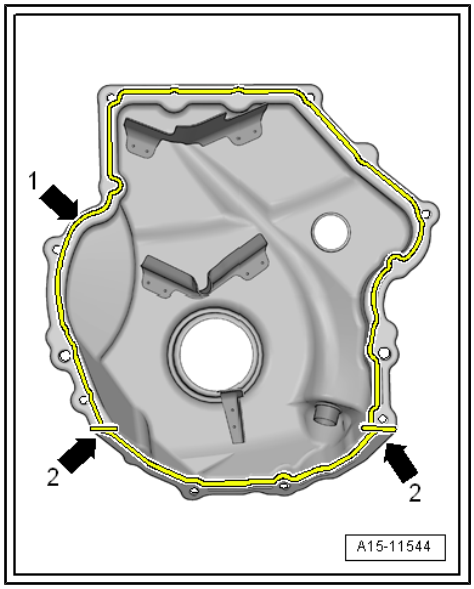

Note

♦ *The cover must be installed within 5 minutes after applying the silicone sealant.*

♦ *The line of sealant must not be thicker than prescribed, as otherwise excessive sealant will enter the sump and obstruct the strainer in the oil intake pipe.*

– Install cover immediately and tighten bolts.

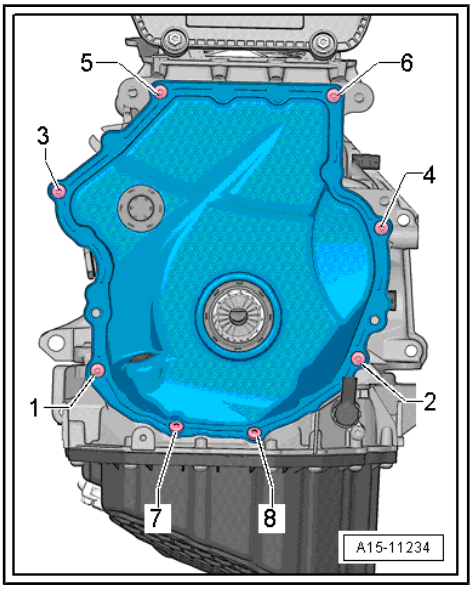

Note

Do not tighten bolts -1- and -4- with turning further angle until after the vibration damper has been installed. The bolts must be unscrewed again for installing the vibration damper. Observe differences in torque for steel and aluminium bolts!

Stage	Steel bolts	Torque specification and turning further angle for steel bolts
1.	-1 - 8-	8 Nm
2.	-1 - 8-	45°

Stage	Aluminium bolts	Specified torque/turning further angle for aluminium bolts
1.	-1 - 8-	4 Nm
2.	-1 - 8-	45°

Continued for all vehicles

– Fit the vibration damper ⇒ page 61 .

– Install valve for oil pressure control - N428- ⇒ page 231 .

– Install poly V-belt tensioner ⇒ page 67 .

– Fit poly V-belt ⇒ page 60 .

– Install front right wheel housing liner ⇒ General body repairs, exterior; Rep. gr. 66 ; Wheel housing liners; Assembly overview - Front wheel housing liner .

– Replenish engine oil and check oil level ⇒ Maintenance ; Booklet 501 ; Engine oil: Draining; Renewing oil filter and replenishing engine oil .

Specified torques

- ⇒ “2.1 Assembly overview - timing chain cover”, page 119
- ⇒ Fig. ““Engine support - Tightening torque and sequence”“ , page 70
- ⇒ “2.1 Installation overview - assembly mountings”, page 44

3 Chain drive

3.1 Assembly overview - camshaft timing chains

Note

- *After working on the chain drive, adapt learnt values in engine control unit. To do this, switch on ignition, and select the following menu options on vehicle diagnostic tester :*
- `0001 - Adaption diagnosis chain length`

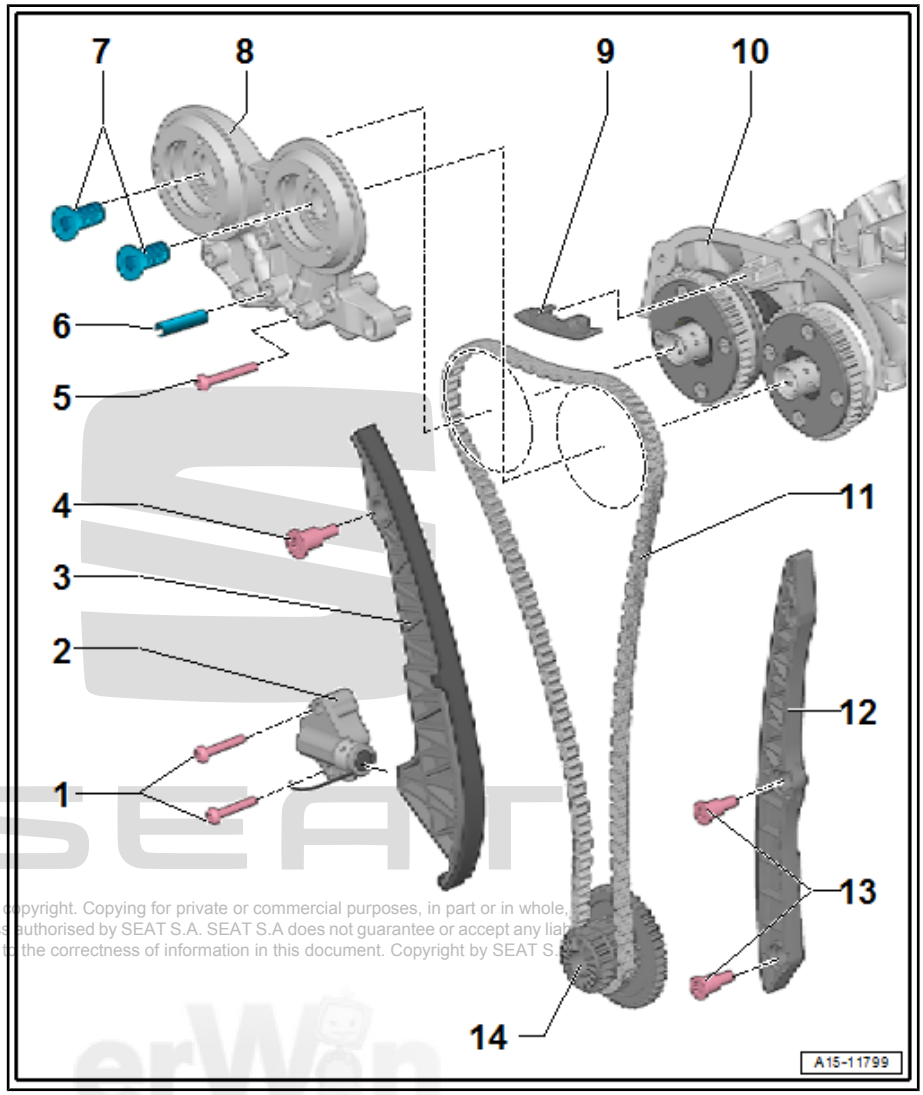

1 - Bolt

- ❑ Must be renewed if removed
- ❑ 4 Nm + 90°

2 - Chain tensioner

- ❑ Sprung
- ❑ Before removing, lock in place using locking tool - T40267-

3 - Slide rail for the distribution chain

4 - Guide pin

- ❑ 20 Nm

5 - Bolt

- ❑ Must be renewed if removed
- ❑ 4 Nm + 180°

6 - Tension sleeve

- ❑ Not fitted on all bearing saddles, depending on version
- ❑ Is pulled into cylinder head together with securing bolt

7 - Timing valves

- ❑ Left-hand thread
- ❑ Different for each version
- ❑ Checking ⇒ page 130
- ❑ remove with fitting tools - T10352A- ⇒ page 133
- ❑ 35 Nm

8 - Retaining frame

- ❑ Depending on version, with clamping sleeve; for allocation refer to ⇒ Electronic Parts Catalogue (ETKA)
- ❑ Removing and installing ⇒ page 132
- ❑ Tightening torque and sequence ⇒ page 130

9 - Guide rail for camshaft timing chain

10 - Camshaft housing

11 - Timing chain

- ❑ Removing and fitting ⇒ page 134

12 - Guide rail for camshaft timing chain

13 - Guide pin

- ❑ 20 Nm

14 - Three-part chain sprocket assembly

- ❑ Crankshaft
- ❑ Installation position ⇒ page 130 .

Checking control valve

– It must be possible to press in piston -1- approx. 3 mm against spring force. It must move freely, without sticking.

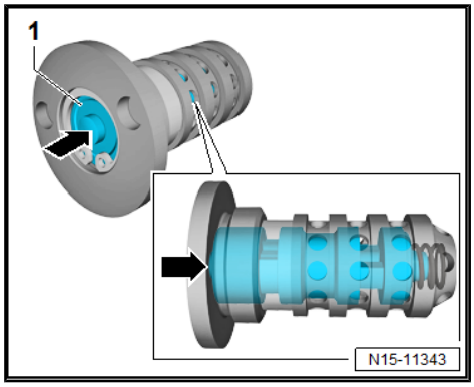

Bearing saddle - specified torque and tightening sequence

If a clamping sleeve is installed, it is pulled into the cylinder head together with bolt -1-.

– Tighten bolts in stages in the sequence shown:

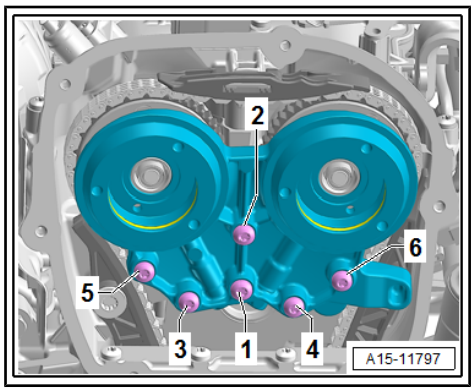

Bearing saddle with clamping sleeve and steel bolts

Stage	Bolts	Specified torques
1.	-1 - 6-	Screw in hand tight to stop.
2.	-1 - 6-	9 Nm

Bearing saddle with clamping sleeve and aluminium bolts

- After removal, renew the bolts that are tightened with turning further angle.

stage	Bolts	Specified torques/turning further angle
1.	-1 - 6-	Screw in hand tight to stop.
2.	-1 - 6-	4 Nm
3.	-1 … 6-	Turn 180° further

Three-part chain sprocket assembly - installation position

- The two sections -arrows- must be aligned.

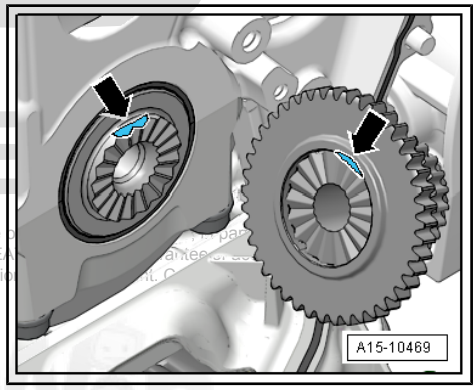

3.2 Assembly overview - drive chain for balancer shaft

Note

- *After working on the chain drive, adapt learnt values in engine control unit. To do this, switch on ignition, and select the following menu option on vehicle diagnostic tester :*
- `0001 - Adaption diagnosis chain length`

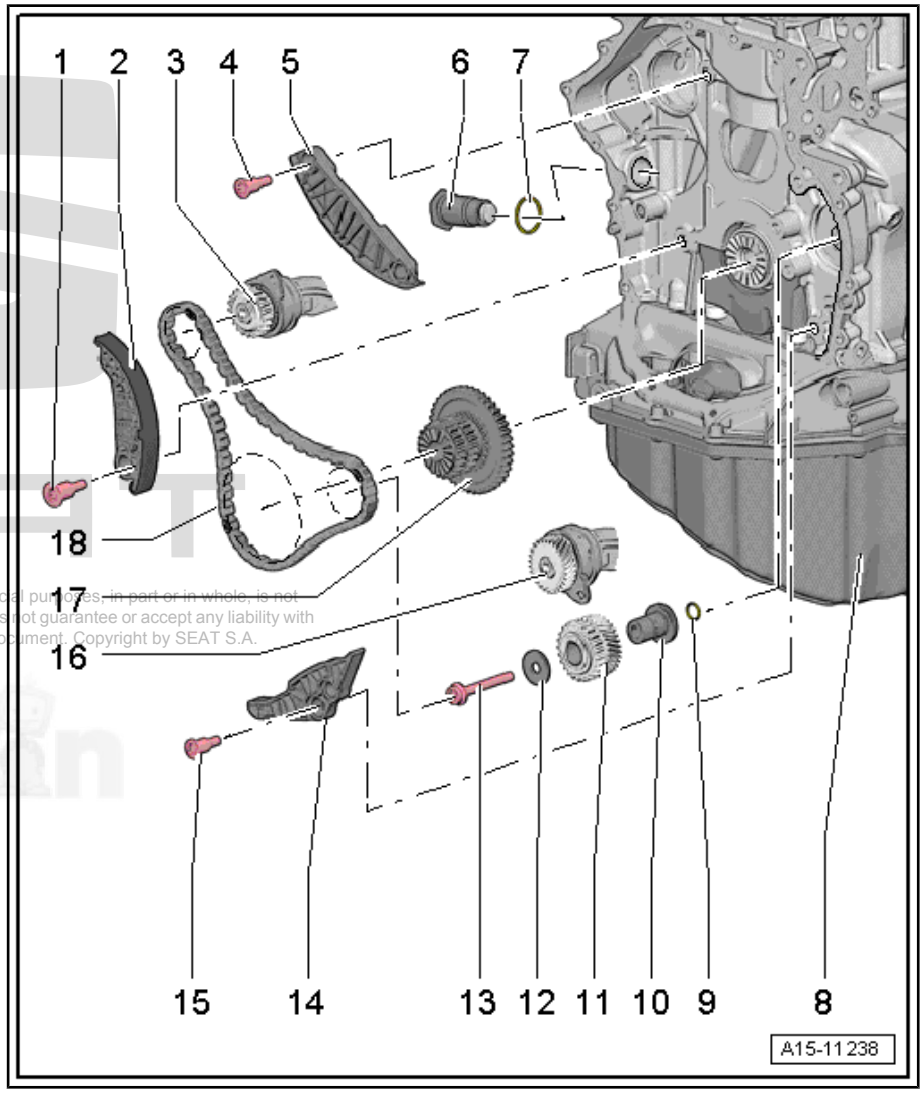

1 - Guide pin
- ❑ 20 Nm

2 - Tensioning rail
- ❑ For timing chain

3 - Balancing shaft
- ❑ Exhaust side
- ❑ Always renew after removal
- ❑ Lubricate bearing with engine oil
- ❑ Only replace in twos ⇒ page 91

4 - Guide pin
- ❑ 20 Nm

5 - Runner
- ❑ For timing chain

6 - Chain tensioner
- ❑ 85 Nm
- ❑ Insert with locking fluid; locking fluid ⇒ Electronic Parts Catalogue (ETKA) .

7 - Seal

8 - Cylinder block

9 - O-ring
- ❑ Lubricate lightly with engine oil

10 - Bearing pin
- ❑ Lubricate with engine oil
- ❑ Installation position ⇒ page 132 .

11 - Intermediate gear wheel
- ❑ If bolt has been loosened, idler gear ⇒ Item 13 (page 131) must be renewed

12 - Thrust washer

13 - Bolt
- ❑ Must be renewed if removed
- ❑ If bolt has been loosened, idler gear ⇒ Item 11 (page 131) must be renewed
- ❑ Tightening torques and sequence ⇒ page 132

14 - Guide rail
- ❑ For balancer shaft distribution chain

15 - Guide pin
- ❑ 20 Nm

16 - Balancing shaft
- ❑ Intake side
- ❑ Always renew after removal
- ❑ Lubricate bearing with engine oil
- ❑ Replace ⇒ page 88

17 - Three-part chain sprocket assembly
- ❑ Installation position ⇒ page 130 .

18 - Drive chain for balance shafts

❑ Removing and installing ⇒ page 148

Bearing bolt: installation

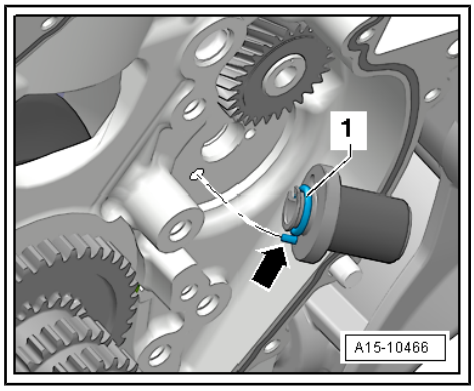

- Renew O-ring -1- and lubricate with oil.
- Dowel pin -arrow- for bearing mounting must engage in bore in cylinder block.
- Lubricate bearing mounting.

Idler gear - tightening sequence

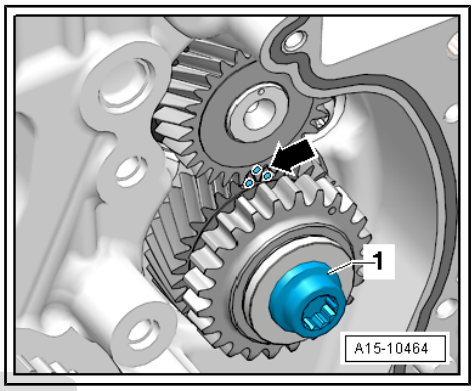

NOTICE

The idler gear must always be renewed. Otherwise no tooth backlash is set, causing damage to the engine.

The new idler gear is coated with a solid film lubricant that wears off after a short period as a result of which the tooth backlash is automatically set.

- After removal, renew the bolts that are tightened with turning further angle.

– Tighten the bolt -1- incrementally.

stage	Specified torques/turning further angle
1.	10 Nm
2.	– Turn idler gear • Idler gear must be without play; otherwise loosen bolt and tighten again
3.	25 Nm
4.	Turn 90° further

3.3 Fitting and removing bearing support module

Special tools and workshop equipment required

◆ Assembly tool - T10352A-

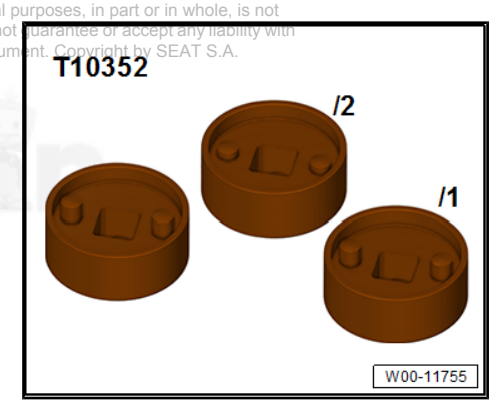

- Assembly tool - T10352/1-
- Assembly tool - T10352/2-
- Assembly tool - T10352/3-
- Assembly tool - T10352/4-

Removing

– Remove the upper cover of the distribution chain ⇒ page 121 .

Note

The timing valves have a left-hand thread.

– Turn assembly tool -1- in -direction of arrow- to remove timing valve on left and right.

Depending on the current model version of the timing valve, one of the tools shown must be used:

- Installation tool - T10352-
- Installation tool - T10352/1-
- Installation tool - T10352/2-
- Installation tool - T10352/3-
- Installation tool - T10352/4-

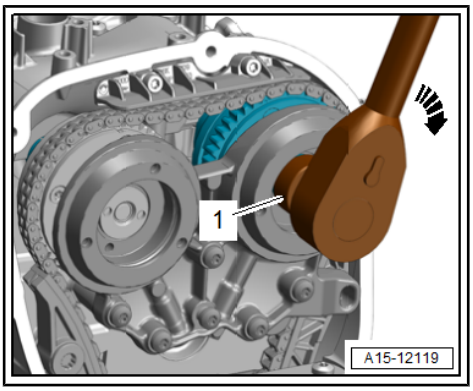

– Unscrew bolts -1 … 6- and bearing saddle without canting it, carefully pull out.

• Carefully pull off bearing saddle; do not tilt it.

– Remove bearing saddle.

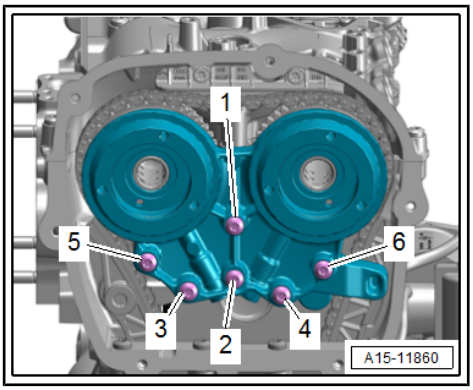

Installing

– Lubricate holes -arrows- with engine oil.

– Check that roll pin -1- is fitted.

• Carefully attach bearing saddle; do not tilt it. Risk of damaging it.

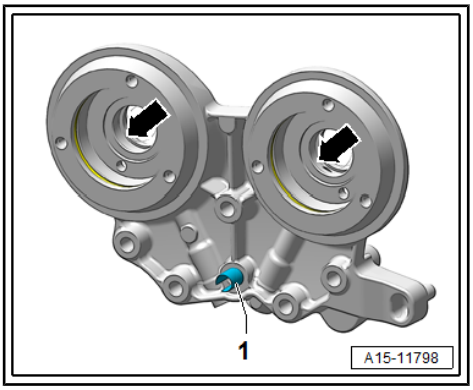

– Press on bearing saddle and press in the bolts -1 … 6- by hand.

– Tighten bolts for bearing saddle ⇒ page 130 .

The remaining installation is carried out in the reverse order, noting the following:

– Install timing chain cover (top) ⇒ page 121 .

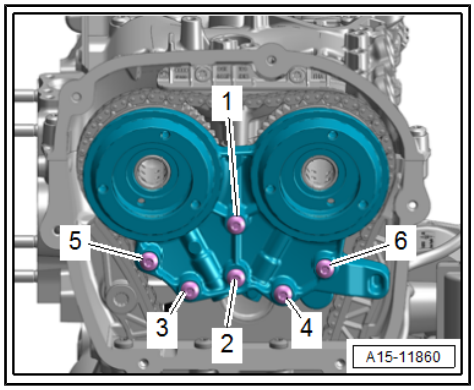

Specified torques

- ⇒ Fig. ""Bearing saddle - specified torque and tightening sequence"" , page 130
- ⇒ Fig. ""Lower timing chain cover – tightening sequence for version with 8 bolts"" , page 120
- ⇒ Fig. ""Lower timing chain cover – tightening sequence for version with 15 bolts"" , page 121
- ⇒ "3.1 Assembly overview - camshaft timing chains", page 128
- ⇒ "1.1 Exploded view - cylinder head", page 105

3.4 Removing and installing camshaft timing chain

Special tools and workshop equipment required

- Assembly tool - T10352A-

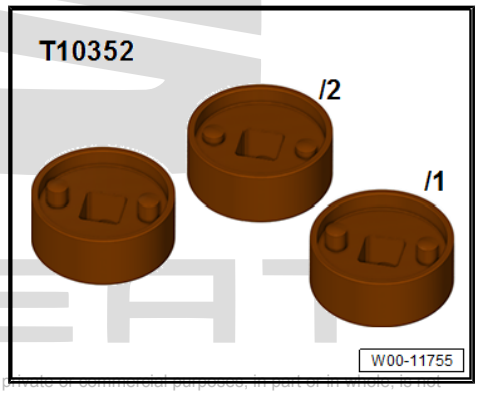

- Assembly tool - T10352/1-
- Assembly tool - T10352/2-
- Assembly tool - T10352/3-
- Assembly tool - T10352/4-
- Dowel pin - T40011-

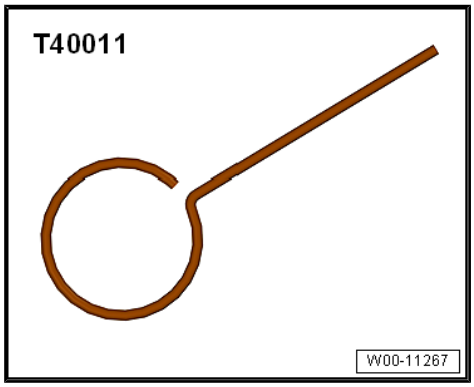

- Assembly lever - T40243-

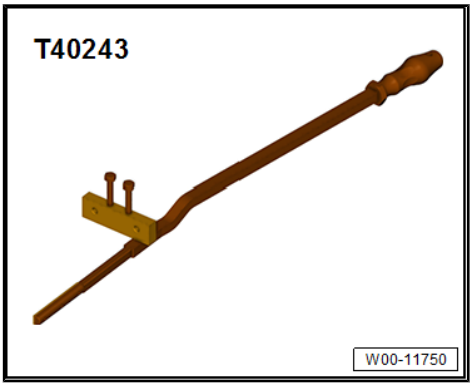

- Assembly tool - T40266-

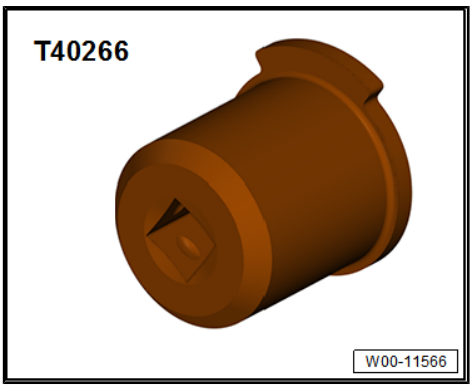

- Measuring tool - T40267-

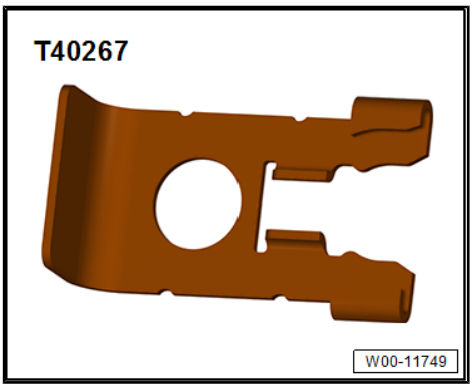

- Camshaft clamp - T40271-

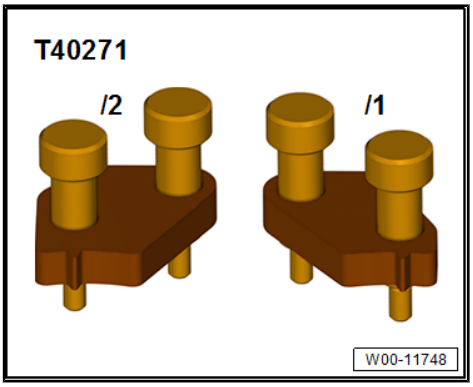

- Cable support bracket - T10355-

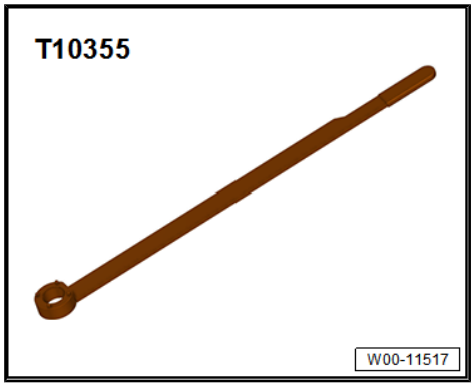

- Assembly tool - T10531-

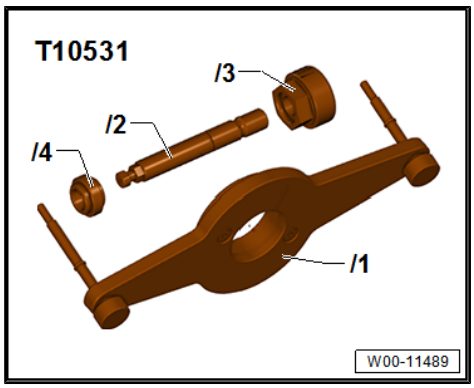

Components of assembly tool - T10531- :

- Retainer - T10531/1-
- Cotter pin - T10531/2-
- Turning over tool - T10531/3-
- Flange nut - T10531/4-

Removing

– Remove noise insulation ⇒ General body repairs, exterior; Rep. gr. 66 ; Noise insulation; Assembly overview - noise insulation .

– Remove front part of right wheel housing liner ⇒ General body repairs, exterior; Rep. gr. 66 ; Wheel housing liners; Removing and installing front wheel housing liner .

– Removing engine mounting ⇒ page 51 .

– Remove engine support ⇒ page 69 .

– Remove the upper cover of the distribution chain ⇒ page 121 .

With markings on cylinder head

– Turn vibration damper to “TDC” position using counter-hold tool - T10355- .

- The markings -1- on the camshaft chain sprockets must be aligned with markings -2- and -3-.
- The notch on the vibration damper must align with the marking on the lower timing chain cover -arrow-.

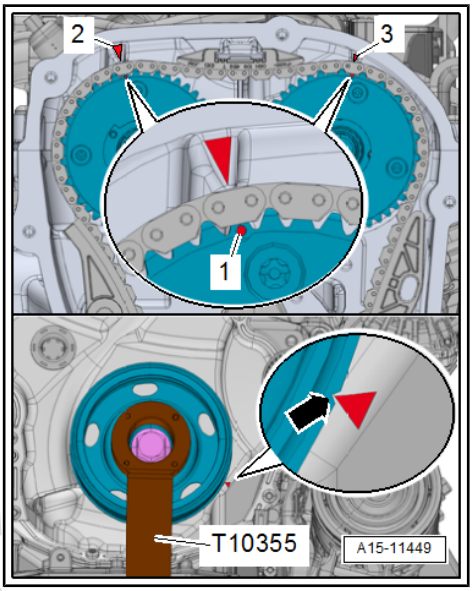

Without markings on cylinder head

– Turn vibration damper to TDC position using counter-hold tool - T10355- .

- The markings -1- on the camshaft chain sprockets must face upwards.
- The notch on the vibration damper must align with the marking on the lower timing chain cover -arrow-.

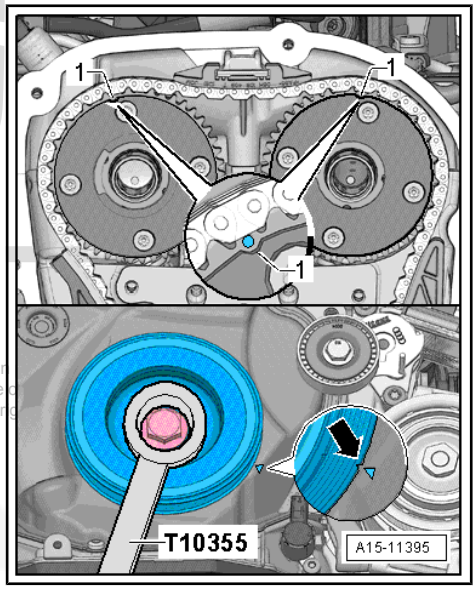

Continued for all vehicles

– Remove lower timing chain cover ⇒ page 123 .

Note

- *The timing valves have a left-hand thread.*
- *Depending on the version, different timing valves may be installed. Use the appropriate assembly tool -1-.*

– Turn assembly tool - T10352/2- or -T10352/4- in -direction of arrow- to remove left and right timing valves.

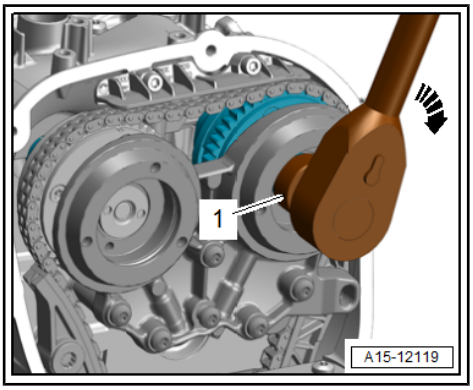

Depending on the current model version of the timing valve, one of the tools shown must be used:

- Installation tool - T10352-
- Installation tool - T10352/1-
- Installation tool - T10352/2-
- Installation tool - T10352/3-
- Installation tool - T10352/4-

– Remove bolts -arrows- and detach bearing saddle.

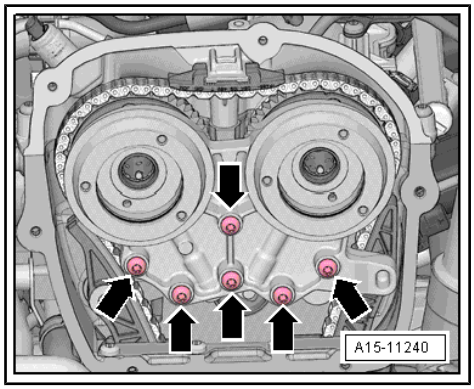

– Remove bolts -arrows-.

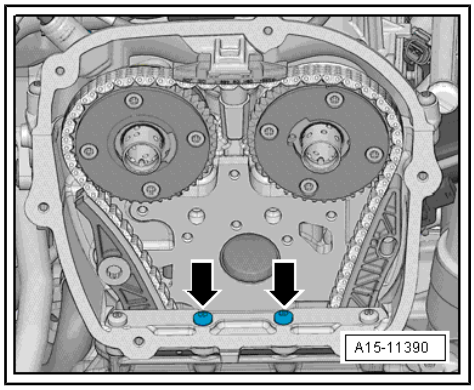

– Screw in the assembly lever - T40243- -arrow-.
– Compress and insert circlip -1- for chain tensioner.
– Slowly press the assembly lever - T40243- in the -arrow direction- and leave it in this position.

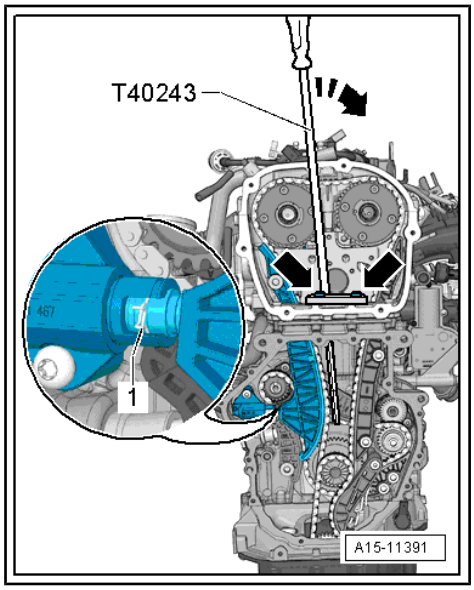

– Lock tensioner using the dowel pin - T40267- .
– Remove assembly lever - T40243- .

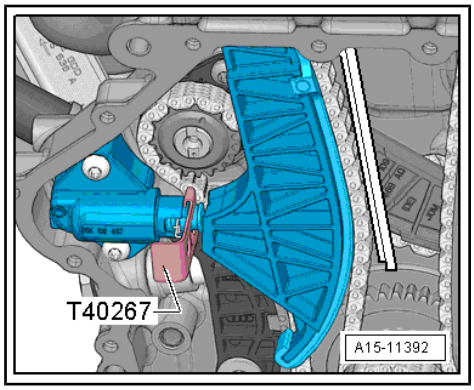

– Screw camshaft clamp - T40271/2- onto cylinder head, and insert it in splines of chain sprocket (direction of arrow -2-). If necessary, turn inlet camshaft using assembly tool - T40266- -arrow 1-.

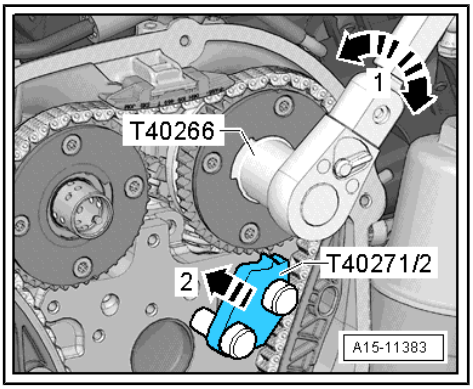

– Bolt camshaft clamp - T40271/1- onto cylinder head.

A second mechanic is required for the following work step.

– Using assembly tool - T40266- , locate exhaust camshaft in direction of arrow -A-. Remove bolt -1- and detach tensioning rail -2- downwards. Turn exhaust camshaft clockwise -A- until camshaft clamp - T40271/1- can be inserted in teeth of chain sprocket -C-.

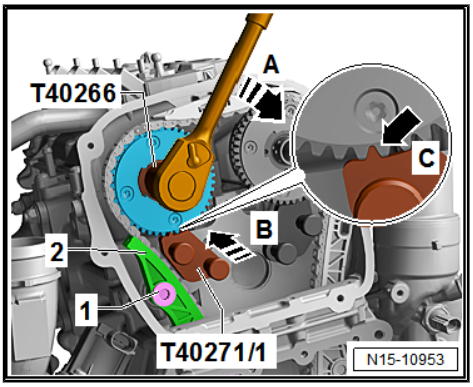

– Remove guide rail -1-. To do this, use a screwdriver to release catch -arrow-, and press off guide rail forwards.

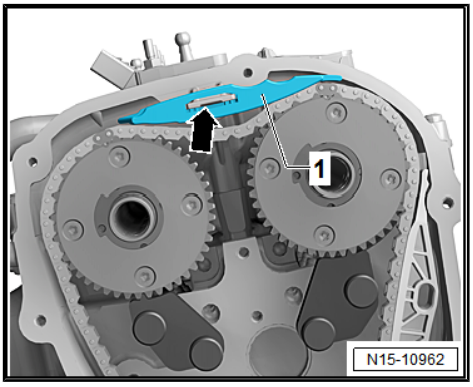

– Unscrew bolts -arrows-, and remove chain tensioner -1-.

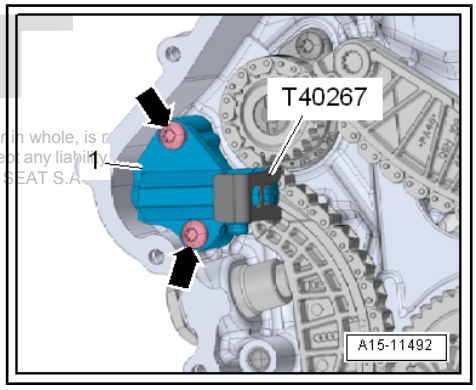

– Press retainer for oil pump chain tensioner in -direction of arrow- and lock in place using dowel pin - T40011- .

– Unscrew bolt -1-, and remove chain tensioner -2-.

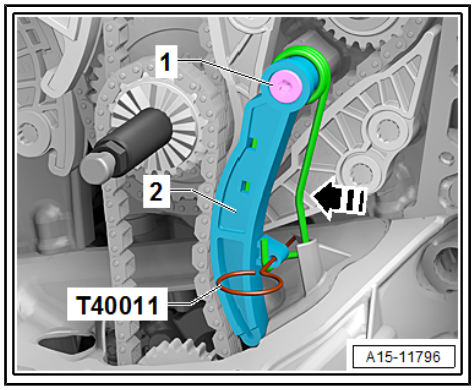

– Unscrew bolts -1-, and remove guide rail -2-.

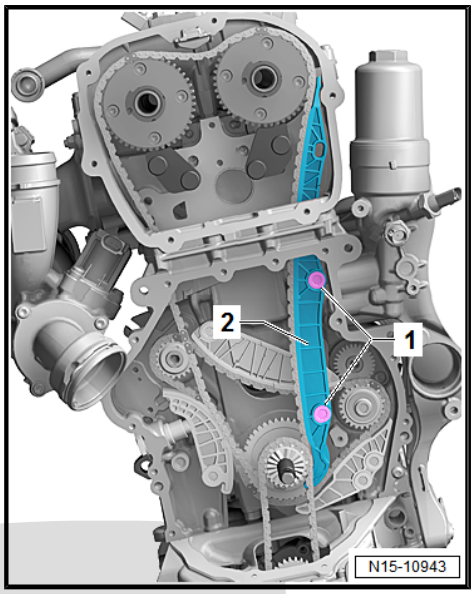

– Remove camshaft timing chain from camshaft sprockets and place onto camshaft journals -arrows-.

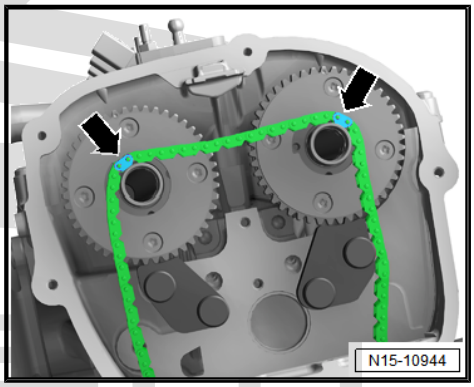

– Remove chain tensioner -1- for balance shaft timing chain.

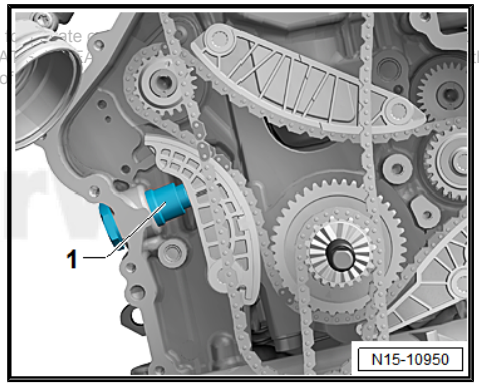

– Remove screws -1-. Remove tensioning rail -2- and guide rails -3- and -4-.

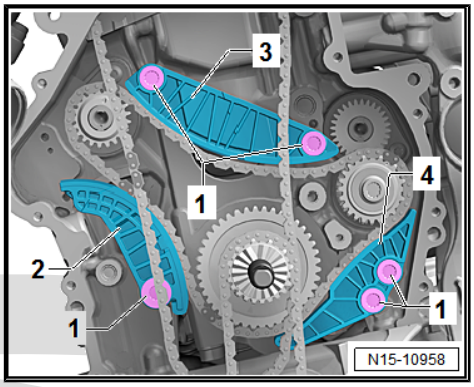

– Loosen tensioning bolt -A-, and unscrew cotter pin -B-.
– Remove three-part chain sprocket assembly; to do so, remove oil pump chain.
– Remove camshaft timing chain and drive chain for balance shaft.

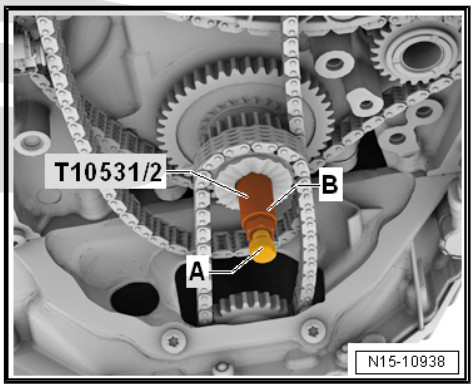

Fitting

– Check if crankshaft is positioned at TDC: The flat section on crankshaft -arrow- must be horizontal.
– Using a permanent felt tip marker, make a marking on cylinder block -1-, as shown in illustration.

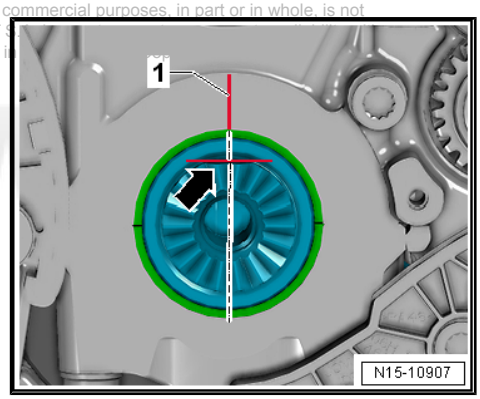

– Mark tooth -1- of three-part chain sprocket adjacent to marking -2- using waterproof pen.

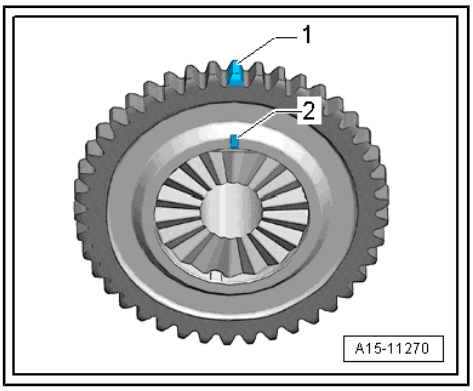

– Turn idler gear/balance shaft to markings -arrow- (do not slacken bolt -1-). The markings on idler gear and balance shaft are difficult to see.

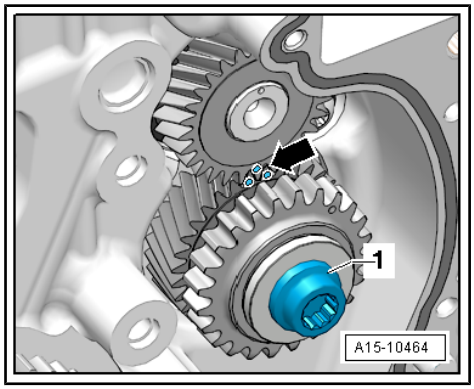

– Fit drive chain for balance shafts. Position chain links with coloured markings -arrows- at markings on chain sprockets.

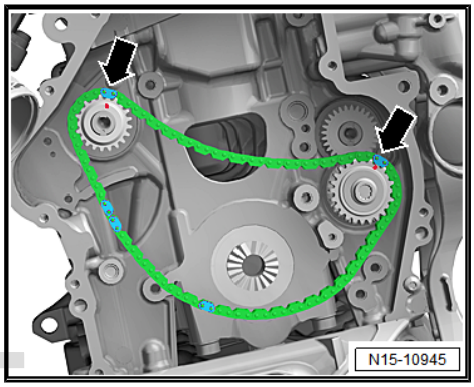

– Install guide rail -1-, and tighten bolts -arrows-.

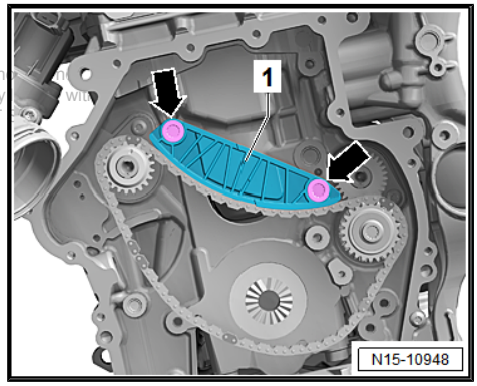

– Fit camshaft timing chain onto camshaft journals with coloured markings -arrows- properly aligned.

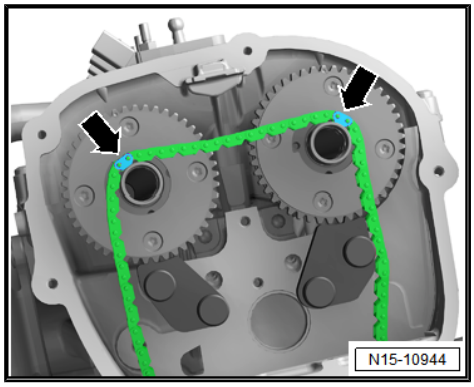

– Fit oil pump chain onto three-part chain sprocket assembly.

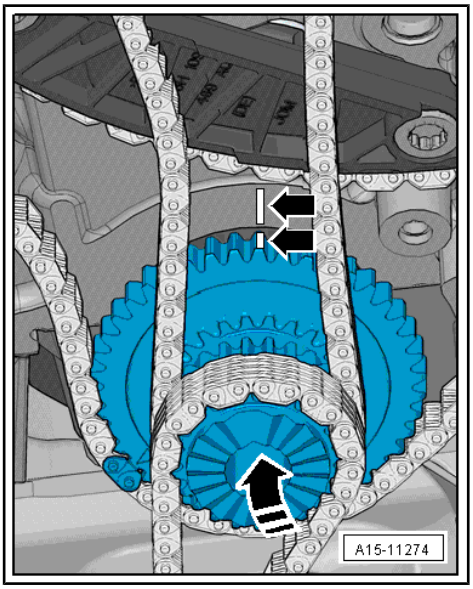

– Swivel three-part chain sprocket assembly towards engine in direction of -arrow- and secure on crankshaft. The marks must coincide -arrows-.

I - Screw clamping pin - T10531/2- into crankshaft, and tighten it by hand.

II - Fit turning over tool - T10531/3- . Screw on flange nut - T10531/4- by hand. Slightly move turning over tool back and forth with a 32 mm open-end spanner. While doing so, retighten flange nut until the chain sprocket is securely seated on the crankshaft splines. Now, tighten tensioning bolt -A-.

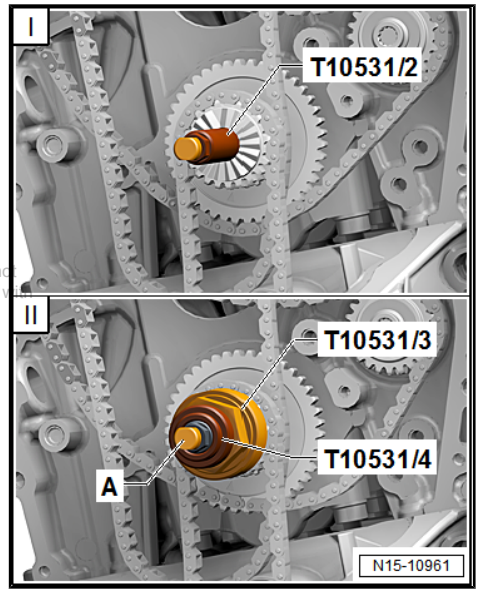

– Position link of drive chain for balancer shafts with coloured marking -arrow- at marking of triple chain sprocket. Install tensioning rail -1- and guide rail -2-. Tighten bolts -3-.

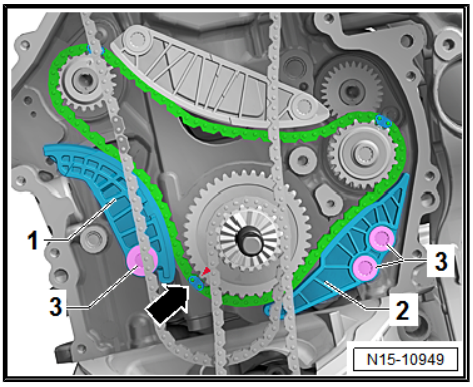

– Install chain tensioner -1-.

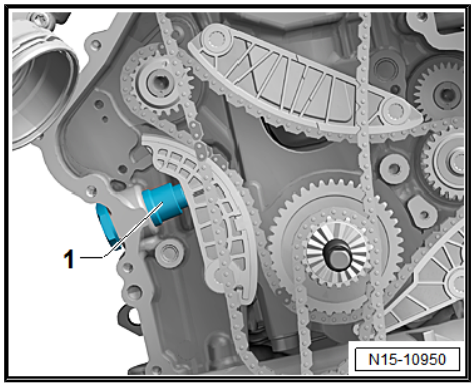

– Make sure that adjustment has been carried out correctly: chain links with coloured markings -arrows- must be positioned at markings on chain sprockets.

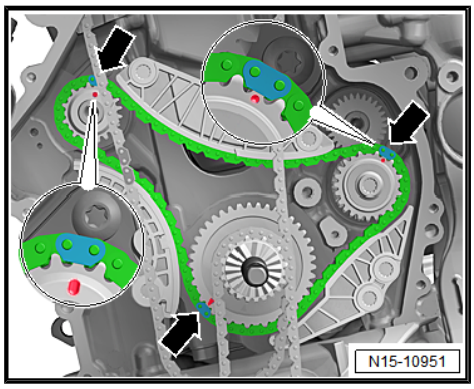

– Fit camshaft timing chain on inlet camshaft, exhaust camshaft and crankshaft. Position chain links with coloured markings -arrows- at the markings on chain sprockets.

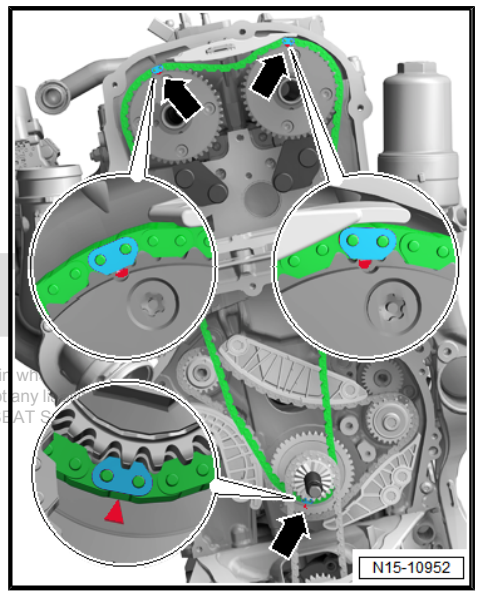

– Install guide rail -2-, and tighten bolts -1-.

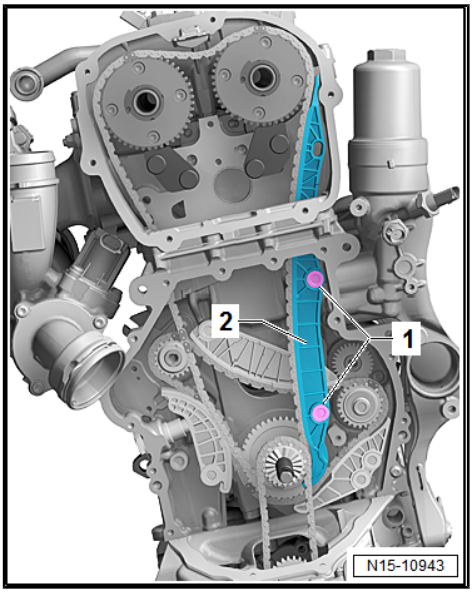

– Install upper guide rail -1-.

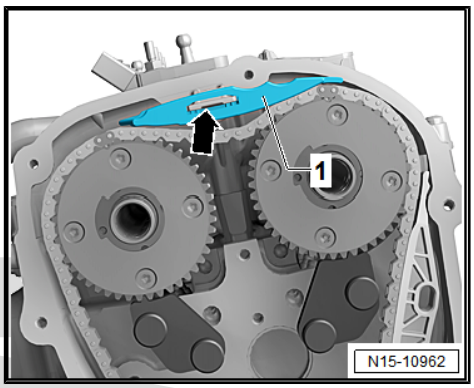

A second mechanic is required for the following work step.

I - Turn exhaust camshaft in -direction of arrow A- using assembly tool - T40266- , and remove camshaft clamp - T40271/1- from between teeth of chain sprocket -B-.

II - Release tension from camshaft in -direction of arrow C- until timing chain rests against guide rail -1-. Hold camshaft in this position, install tensioning rail -2-, and tighten bolt -3-.

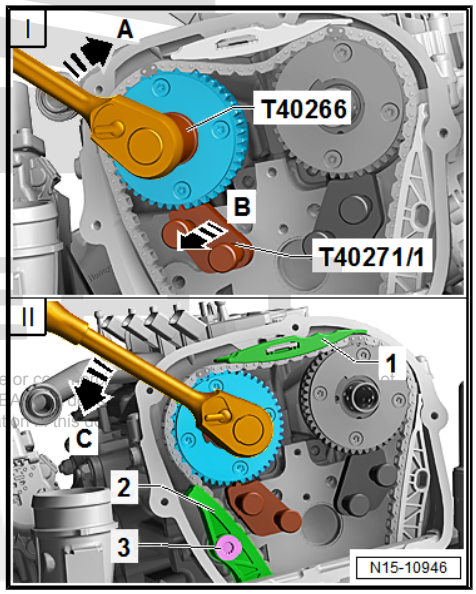

Note

If the camshaft is not counterheld until the tensioning rail has been installed, the timing chain may break open.

– Install chain tensioner -1-, and tighten bolts -arrows-.

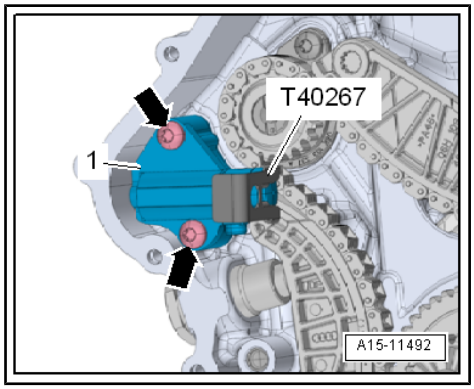

– Install chain tensioner -2-. The retaining clip -arrow- must be seated in recess in upper part of sump. Tighten bolt -1- and remove dowel pin - T40011- .

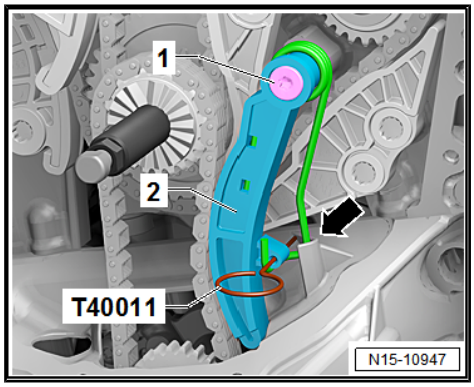

– Using assembly tool - T40266- , turn inlet camshaft in -direction of arrow 1- until camshaft clamp - T40271/2- can be removed from between teeth of chain sprocket -2-. Relieve tension from camshaft.

– Remove camshaft clamp - T40271/1- and -T40271/2- .

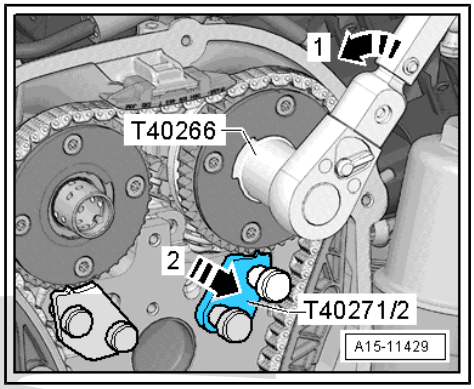

– Make sure that adjustment has been carried out correctly: chain links with coloured markings -arrows- must be positioned at markings on chain sprockets.

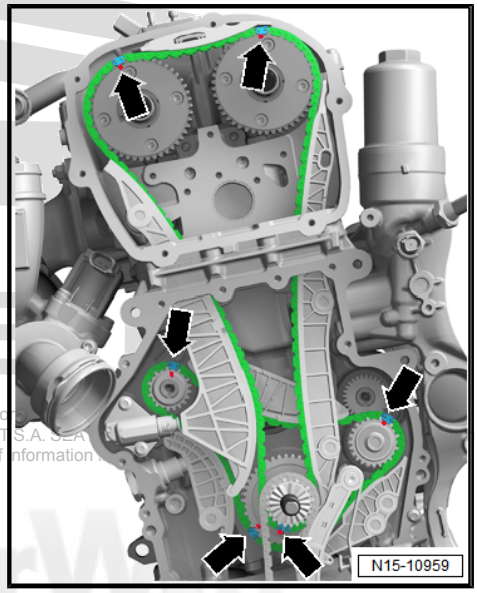

– Screw in bolts -arrows- and securely tighten ⇒ Item 4 (page 106) .

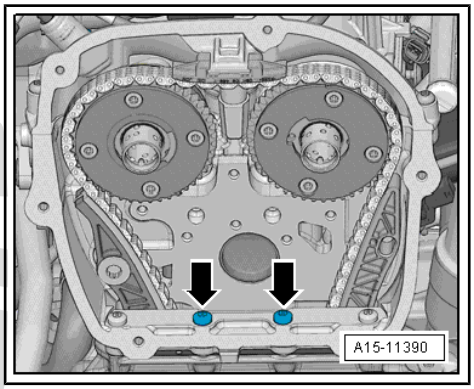

– Moisten holes -arrows- with engine oil.

Note

If a spring pin -1- is fitted, and if the bearing saddle is to be re-installed, the spring pin must be driven back. Clamping sleeve must be flush with bearing saddle at cylinder head end.

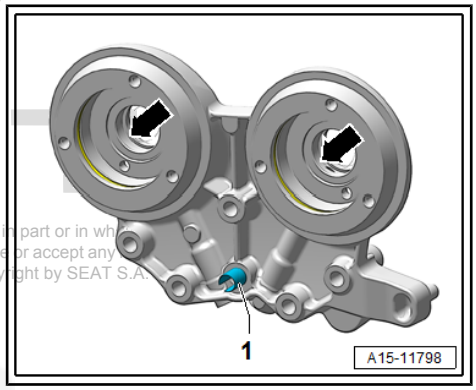

– Fit bearing saddle. Do not cant bearing saddle, while doing so. Screw in bolts -1...6- by hand.

– If a clamping sleeve is installed, it is pulled into the cylinder head together with bolt -1-.

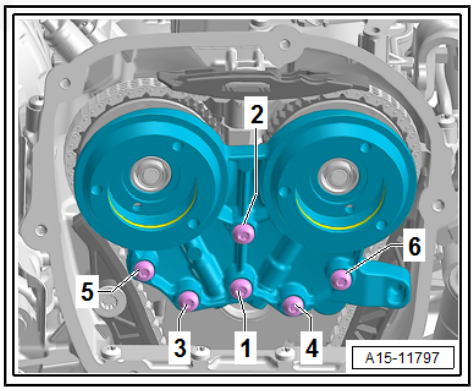

– Remove the Pinning tool - T40267- .

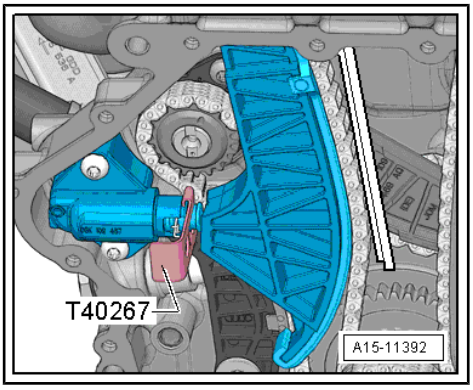

– Tighten bolts -arrows- for bearing saddle ⇒ Item 5 (page 129) .

– Install timing valves ⇒ Item 7 (page 129) .

– Turn the engine 2x in the direction of rotation of the engine.

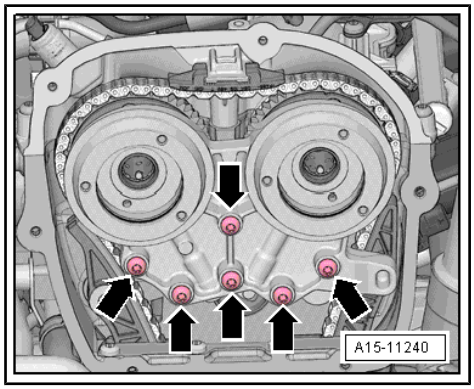

Note

Due to the power transmission, the coloured chain links no longer align after engine rotation.

– Remove turning over tool, and install lower timing chain cover ⇒ page 123 .

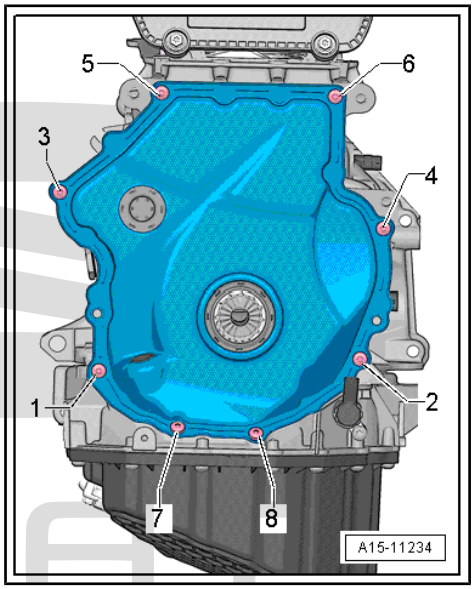

Note

Do not tighten bolts -1- and -4- with turning further angle until after the vibration damper has been installed. The bolts must be unscrewed again for installing the vibration damper.

– Install vibration damper ⇒ page 61 .

– Install timing chain cover (top) ⇒ page 121 .

– Install poly V-belt tensioner ⇒ page 61 .

– Fit poly V-belt ⇒ page 60 .

The remaining installation is carried out in the reverse order; note the following:

– Install windscreen washer tank filler ⇒ Electrical system; Rep. gr. 92 ; Windscreen washer system; Exploded view - windscreen washer system .

– After working on the chain drive, adapt learnt values in engine control unit. To do this, switch on ignition, and select the following menu option on vehicle diagnostic tester :

- `0001 - Adaption diagnosis chain length`

Specified torques

- ⇒ “3.1 Assembly overview - camshaft timing chains”, page 128
- ⇒ “3.2 Assembly overview - drive chain for balancer shaft”, page 130
- Noise insulation; Exploded view - noise insulation ⇒ General body repairs, exterior; Rep. gr. 66 ; Noise insulation; Exploded view - noise insulation

3.5 Removing and installing drive chain for balancer shaft

The procedure “Removing and installing drive chain for balance shaft” is part of the procedure “Removing and installing camshaft timing chain” ⇒ page 134 .

3.6 Checking valve timing

Special tools and workshop equipment required

♦ Dial gauge set, 4-part - VAS 6341-

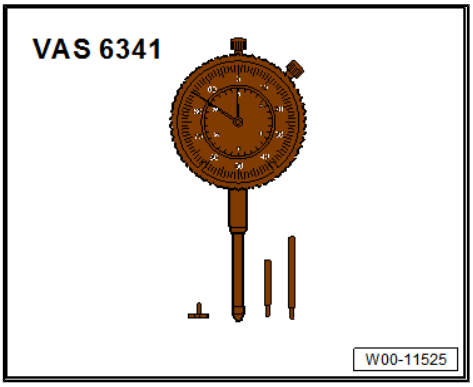

♦ Dial gauge adapter - T10170 A-

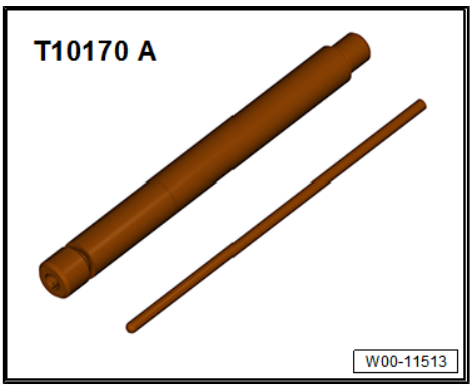

– Remove the upper cover of the distribution chain ⇒ page 121 .
– Remove noise insulation ⇒ General body repairs, exterior; Rep. gr. 66 ; Noise insulation; Assembly overview - noise insulation .
– Removing and installing right front wheel and front element of the right wheel housing liner ⇒ General body repairs, exterior; Rep. gr. 66 ; Wheel housing liners; wheel housing liner on the front side .
– Using 24 mm socket, turn crankshaft via vibration damper in direction of engine rotation until markings -1- and -2- are almost at top.
– Remove ignition coil with output stage for cylinder 1 ⇒ page 452 .

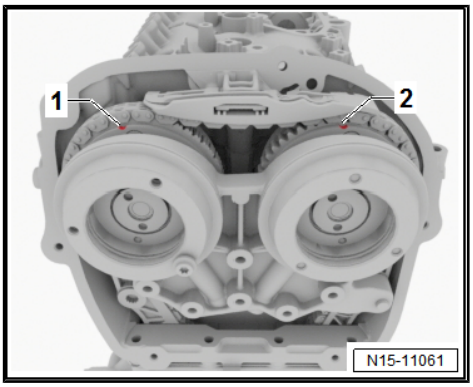

– Remove spark plug for cylinder 1 using spark plug socket and extension - 3122 B- .

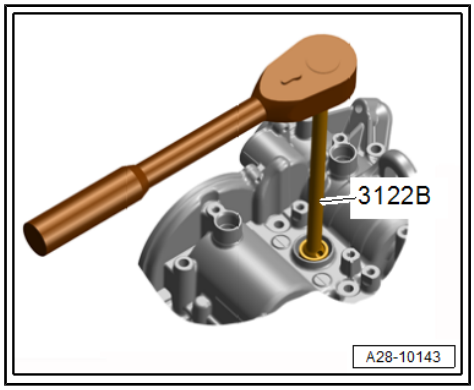

– Screw adapter for dial gauge - T10170/A- into spark plug hole as far as the stop.

– Insert gauge - VAS 6341- with extension - T10170A/1- as far as the stop and secure using nut -arrow-.

– Rotate the crankshaft slowly to the maximum deflection of the pin in the direction of engine rotation. Once the maximum deflection of the pin has been reached (reverse point of the pin), the piston is located in the »TDC position«.

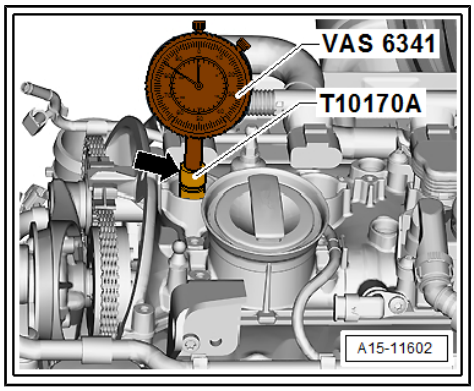

Note

- *Use a ratchet with a 24 mm socket to turn the vibration damper*
- *If the crankshaft has been rotated over the "TDC" position, turn the crankshaft a further 2 times in the direction of engine rotation. Do not turn engine in opposite direction to normal rotation.*

With markings on cylinder head

- The markings -1- on the camshaft chain sprockets must be aligned with markings -2- and -3-.
- The notch on the vibration damper must align with the marking on the lower timing chain cover -arrow-.

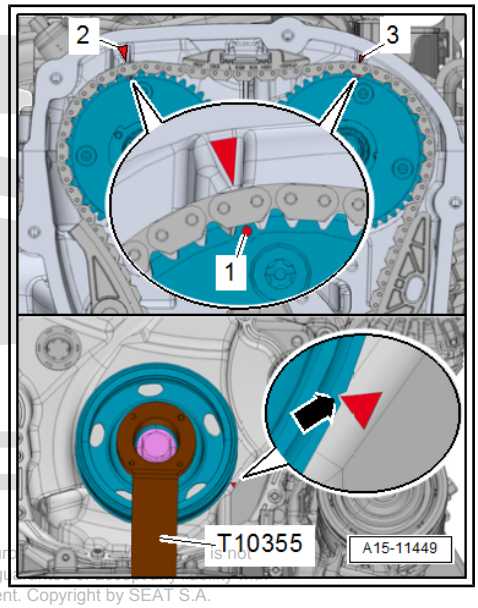

Without markings on cylinder head

- Notch on vibration damper and marking on cover for timing chains (bottom) must be aligned -arrow-.
- The markings -1- on the camshaft chain sprockets must face upwards.

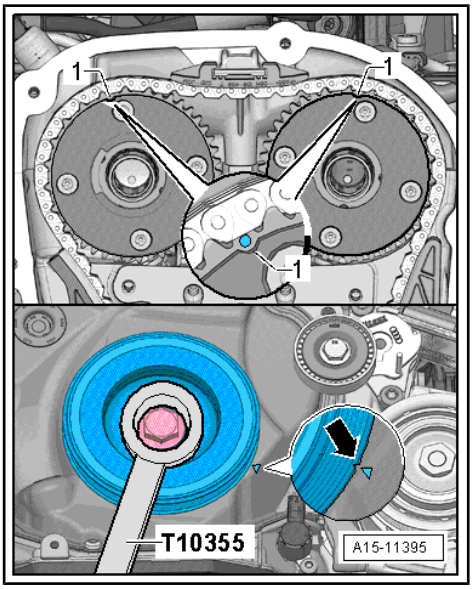

– Measure distance from edge -1- to marking -2- on exhaust camshaft chain sprocket.
- Specification: 74 ... 77 mm

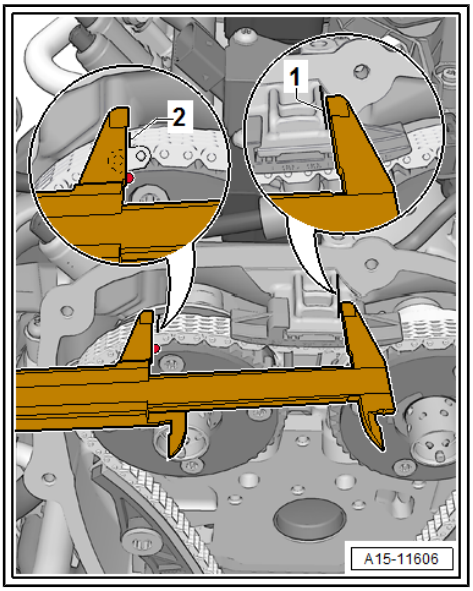

– If specification is obtained, measure distance between marking on exhaust camshaft chain sprocket -3- and marking on inlet camshaft chain sprocket -4-.
- Specification: 124 ... 127 mm

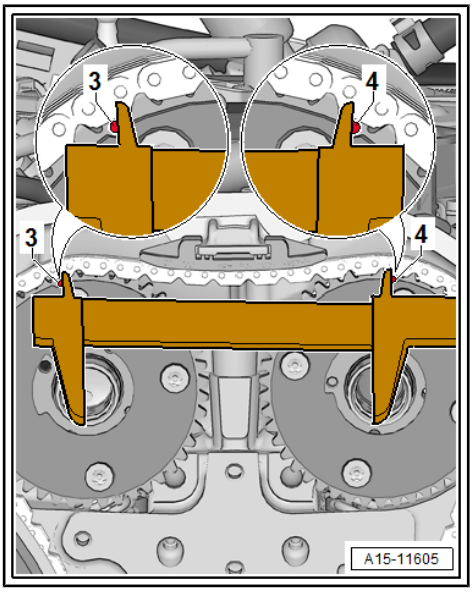

Note

The offset of a tooth corresponds to a deviation of approx. 6 mm with respect to the theoretical value. If an offset is found, the timing chain must be re-fitted.

Specified torques

♦ ⇒ General body repairs, exterior; Rep. gr. 66 ; Noise insulation; Assembly overview - noise insulation .

3.7 Checking timing chain

Note

If customer complaints (e.g noise) indicate a stretched camshaft timing chain, check timing chain as described below.

– Remove right wheel housing liner ⇒ General body repairs, exterior; Rep. gr. 66 ; Wheel housing liner; Removing and installing front wheel housing liner .

– Remove sealing plug -arrow-. The sealing cap must be renewed.

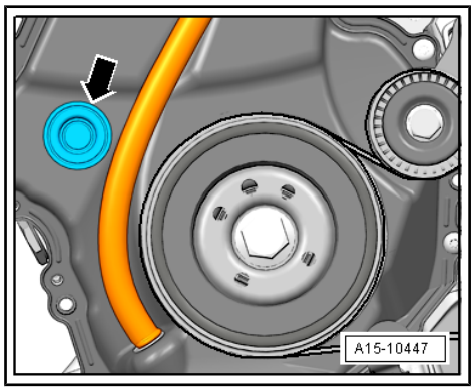

– Turn vibration damper in direction of engine rotation until the piston of the chain tensioner is extended to its maximum -in the direction of the arrow-.

– Count the visible teeth of the piston.

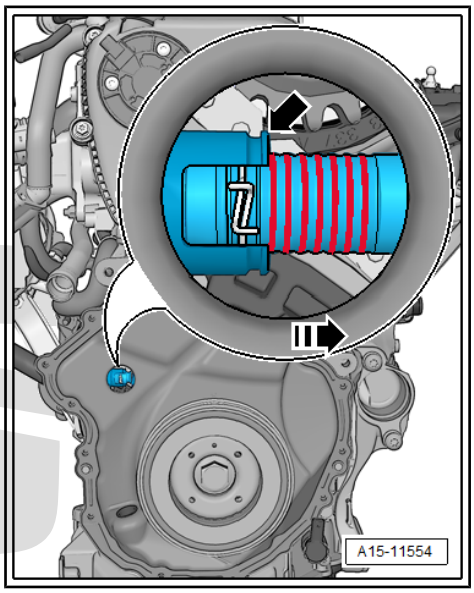

Note

Visible teeth are to be understood as those teeth which are to be found to the right of the chain tensioner housing -arrow-.

- If 6 or fewer teeth are visible: the camshaft chain sprocket does not have to be replaced.
- If 7 or more teeth are visible: the camshaft chain sprocket must be replaced ⇒ page 134 .

4 Valve gear

4.1 Assembly overview - valve gear

Note

- *Cylinder head and cylinder head cover must be renewed together.*
- *After installing camshafts wait for approx. 30 minutes before starting engine. The hydraulic elements should be allowed to sit in place (if not, the valves may press on the cylinder).*
- *After working on the valve gear, turn the engine carefully at least 2 rotations to ensure that none of the valves make contact when the starter is operated.*
- *First replace seals and gaskets.*
- *After working on the chain drive, adapt learnt values in engine control unit. To do this, switch on ignition and select the following menu item in the vehicle diagnostic and service information system :*
- `0001 - Adaption diagnosis chain length`

4.1.1 Assembly overview - valve gear, part I

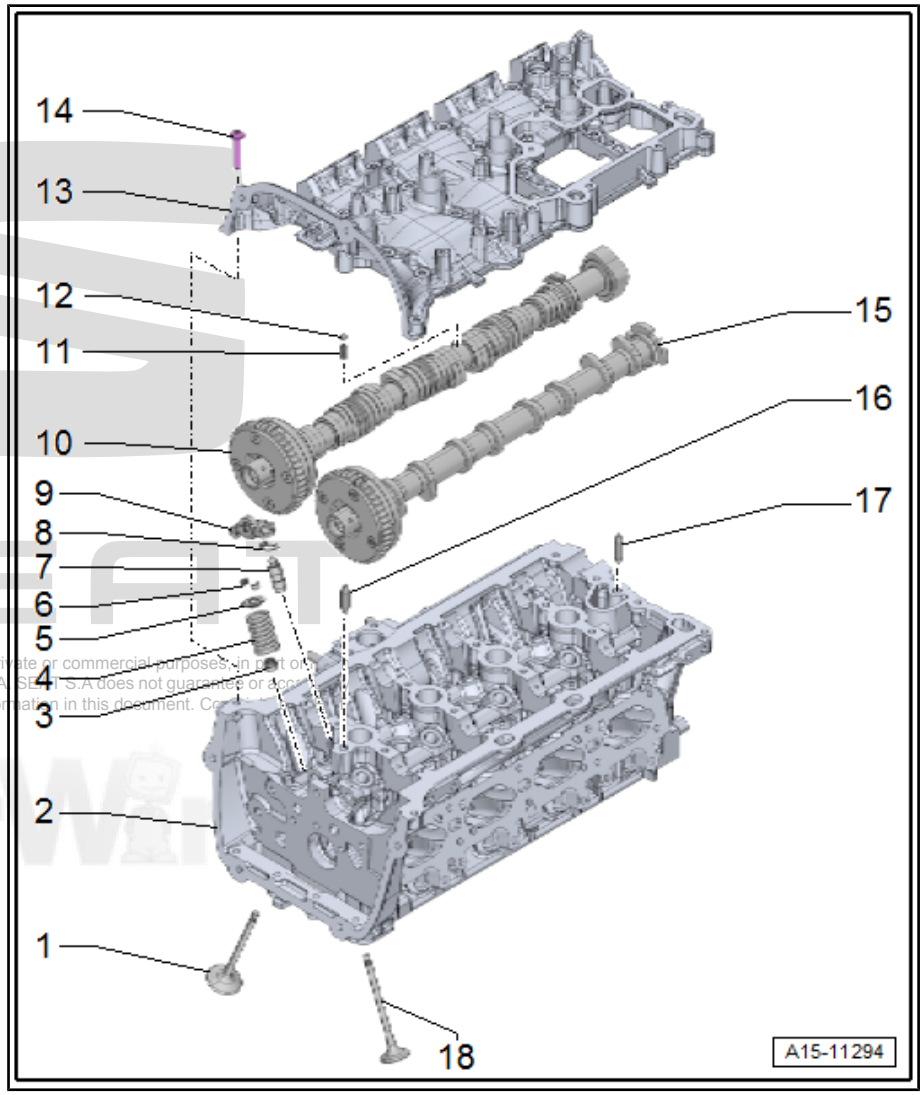

1 - Exhaust valve

- ❑ Do not rework. Only lapping in is permitted.
- ❑ Valve mass ⇒ page 199
- ❑ Checking valve guides ⇒ page 198 .

2 - Cylinder head

3 - Valve stem seal

- ❑ Replace ⇒ "4.7.1 Removing and installing valve stem oil seals (cylinder head installed)", page 188 ⇒ "4.7.2 Removing and installing valve stem oil seals (cylinder head removed)", page 193

4 - Valve spring

5 - Valve spring plate

6 - Valve cotters

7 - Hydraulic compensation element

- ❑ Do not exchange position
- ❑ Oil contact surface

8 - Securing clip

- ❑ For the hydraulic valve compensation element

9 - Roller rocker finger

- ❑ Removing and fitting ⇒ "4.2 Removing and installing camshaft", page 158
- ❑ Mark installation position for re-installation
- ❑ Check tapered roller bearing for ease of movement.
- ❑ Lubricate contact surfaces before installing

10 - Exhaust camshaft

- ❑ Removing and fitting ⇒ page 158
- ❑ Check radial play with a Plastigage thread (with roller rocker arms removed)
- ❑ Radial clearance: 0.024 ... 0.066 mm
- ❑ Maximum eccentricity: 0.04 mm

11 - Spring

- ❑ Not available as a separate replacement part

12 - Ball

- ❑ for forked sleeve
- ❑ Fitting ⇒ page 185

13 - Rocker finger cover

- ❑ With integrated camshaft bearings.
- ❑ Clean sealing surface; machining not permitted
- ❑ Remove any remaining sealant

14 - Bolt

- ❑ Renew
- ❑ Loosening ⇒ page 155
- ❑ Tightening sequence ⇒ page 155

15 - Inlet camshaft

- ❑ Removing and fitting ⇒ page 158
- ❑ Check radial play with a Plastigage thread (with roller rocker arms removed)
- ❑ Radial clearance: 0.024 ... 0.066 mm
- ❑ Maximum eccentricity: 0.04 mm

16 - Dowel pins

17 - Dowel pins

18 - Inlet valve

- ❑ Do not rework. Only lapping in is permitted.
- ❑ Valve mass ⇒ page 199
- ❑ Checking valve guides ⇒ page 198

Loosening cylinder head cover

– Loosen cylinder head cover bolts in the sequence -1 ... 6-.

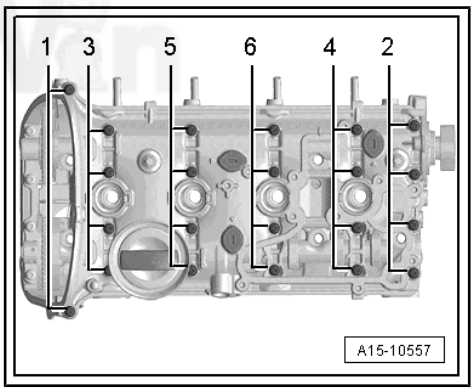

Tightening sequence for cylinder head cover

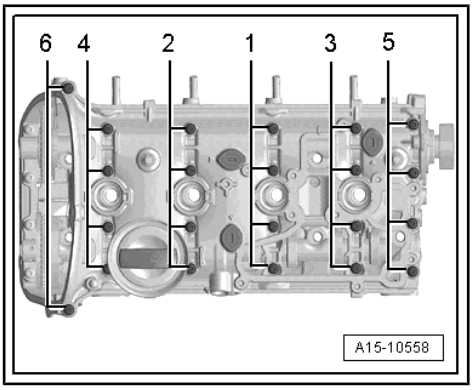

Note

- ♦ *Renew bolts that are tightened with turning further angle.*
- ♦ *Take care to keep cylinder head cover level.*

– Tighten bolts in stages in the sequence shown:

stage	Bolts	Specified torques/turning further angle
1.	-1 - 6-	Screw in by hand in several stages as far as stop
2	-1 - 6-	8 Nm
3.	-1 … 6-	Turn 90° further

Distinguishing between valve stem oil seals

-A- valve stem oil seal with one sealing lip

- Press on using valve shaft seal fitting tool - 3365-

-B- valve stem oil seal with two sealing lips

- Only for exhaust side of certain engines; allocation ⇒ Electronic parts catalogue (ETKA)
- Press on using valve shaft seal fitting tool - T40376/1-

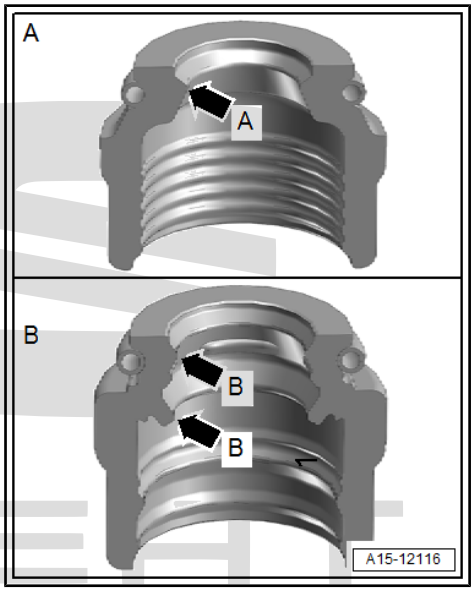

4.1.2 Assembly overview - valve gear, part II

1 - Cylinder head

2 - O-ring

- ❑ Lubricate lightly with engine oil
- ❑ Ensure that this is not damaged
- ❑ Not a replacement part, provided together with actuator for camshaft adjustment

3 - Actuator for variable valve timing

- Actuator 1 for camshaft adjustment - F366-
- Actuator 2 for camshaft adjustment - F367-
- Actuator 3 for camshaft adjustment - F368-
- Actuator 4 for camshaft adjustment - F369-
- Actuator 5 for camshaft adjustment - F370-
- Actuator 6 for camshaft adjustment - F371-
- Actuator 7 for camshaft adjustment - F372-
- Actuator 8 for camshaft adjustment - F373-
  - ❑ Removing and fitting ⇒ page 187
  - ❑ Moving to installation position ⇒ page 188

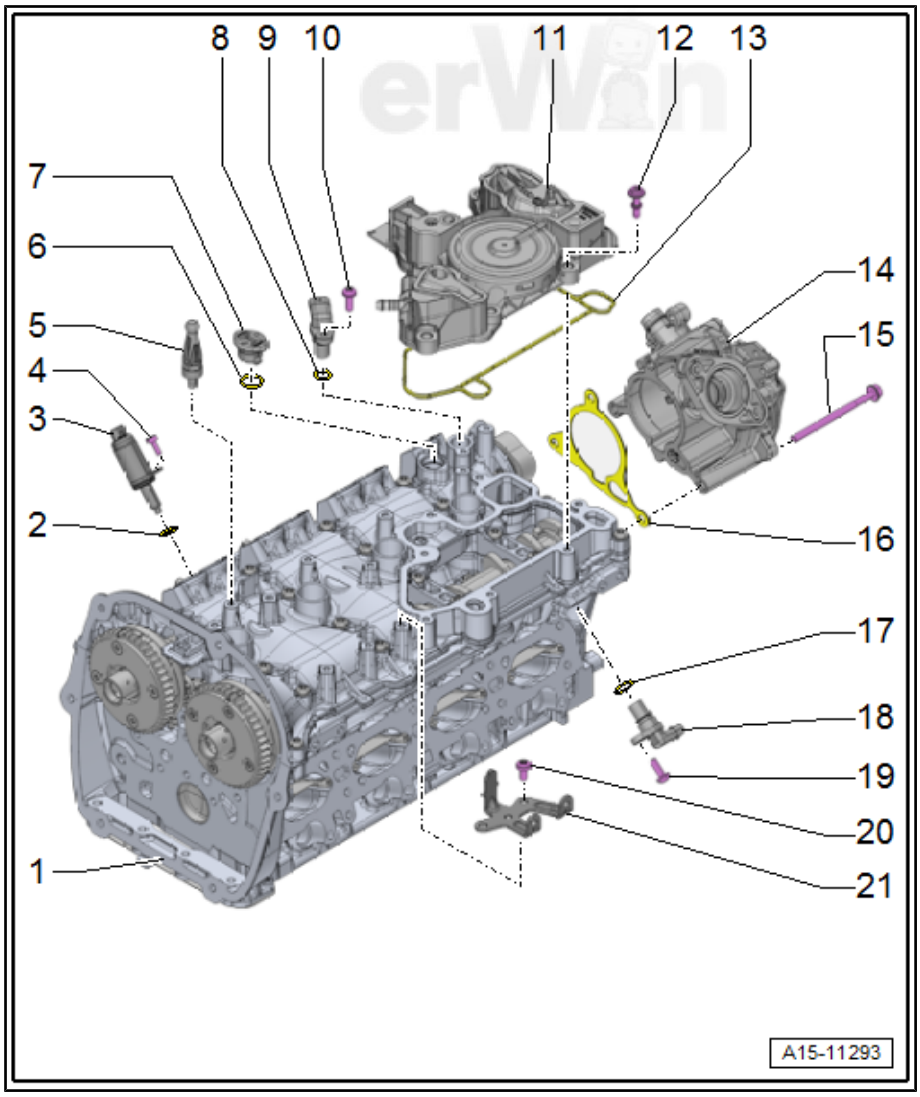

4 - Bolt
- ❑ 5 Nm

5 - Ball stud
- ❑ For engine cover panel
- ❑ 9 Nm

6 - O-ring
- ❑ Renew
- ❑ Lubricate lightly with engine oil

7 - Sealing cap

8 - O-ring
- ❑ Renew
- ❑ Lubricate lightly with engine oil

9 - Hall sender 3 - G300-
- ❑ Exploded view ⇒ page 451

10 - Bolt
- ❑ Tightening torque ⇒ page 451

11 - Oil separator
- ❑ Removing and fitting ⇒ page 220

12 - Bolt
- ❑ Tightening torque and sequence ⇒ page 220

13 - Gasket
- ❑ Renew if damaged

14 - Vacuum pump
- ❑ Removing and fitting ⇒ page 115

15 - Bolt
- ❑ Renew
- ❑ 8 Nm + 180°

16 - Gasket
- ❑ Renew after removing

17 - O-ring
- ❑ Renew
- ❑ Lubricate lightly with engine oil

18 - Hall sensor - G40-
- ❑ Exploded view ⇒ page 451

19 - Bolt
- ❑ Tightening torque ⇒ page 451

20 - Bolt
- ❑ 9 Nm

21 - Support plate
- ❑ For activated charcoal filter solenoid valve 1 - N80-

4.2 Removing and installing camshaft

⇒ “4.2.1 Distinguishing features of guide rail for camshaft timing chain”, page 158

⇒ “4.2.2 Removing and installing camshaft, version A”, page 158

⇒ “4.2.3 Removing and installing camshaft, version B”, page 172

4.2.1 Distinguishing features of guide rail for camshaft timing chain

Depending on the model, different guide rails may be installed.

– Remove timing chain cover (top) ⇒ page 121 .

– Check -arrow- which version of the guide rail -1- is installed.

– Removing and installing camshaft with guide rail of version A ⇒ page 158 .

– Removing and installing camshaft with guide rail of version B ⇒ page 172 .

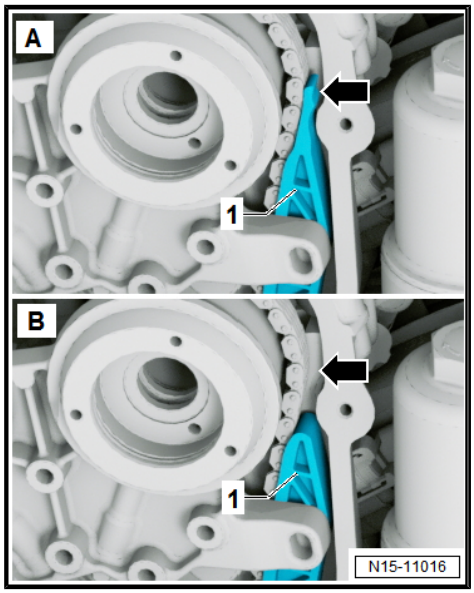

4.2.2 Removing and installing camshaft, version A

Special tools and workshop equipment required

♦ Assembly tool - T10352A-

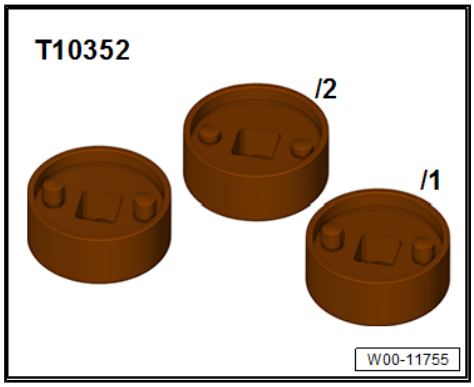

♦ Assembly tool - T10352/1-

♦ Assembly tool - T10352/2-

♦ Assembly tool - T10352/3-

♦ Assembly tool - T10352/4-

- Assembly lever - T40243-

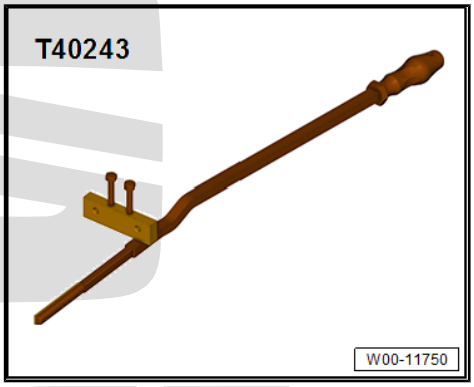

- Assembly tool - T40266-

- Measuring tool - T40267-

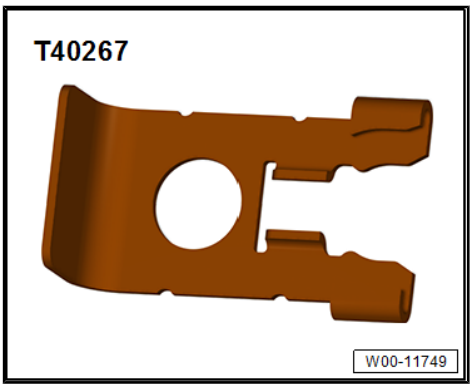

- Camshaft clamp - T40271-

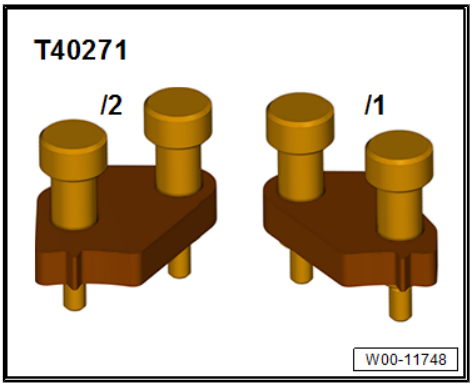

- Cable support bracket - T10355-

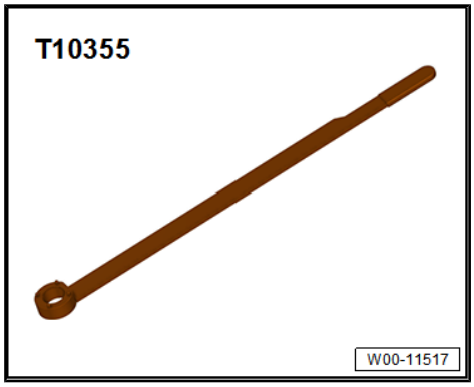

- Engine bung set - VAS 6122-

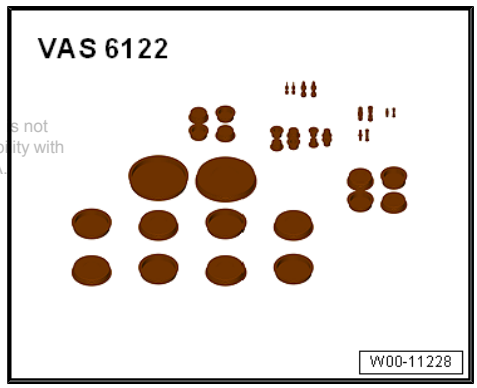

- Sealant ⇒ Electronic parts catalogue (ETKA)

Removing

Note

- *Sealing surfaces at bottom of cylinder head cover and top of cylinder head must not be machined.*
- *The camshaft bearings are integrated into the cylinder head and cylinder head cover. The camshaft timing chain must be relieved of tension before you remove the cylinder head cover.*
- *Fit the cable ties in the original position when installing.*

– Remove air filter housing ⇒ page 356 .

– Remove upper coolant pipe ⇒ page 289 .

– Remove ignition coils ⇒ page 452 .

– Remove noise insulation ⇒ General body repairs, exterior; Rep. gr. 66 ; Noise insulation; Removing and installing noise insulation .

Vehicles with windscreen washer tank, right side:

– Remove windscreen washer tank filler -2- ⇒ Electrical system; Rep. gr. 92 ; Windscreen washer system; Removing and installing tank for windscreen washer system .

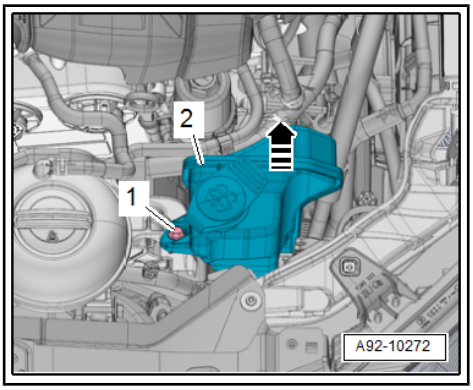

Continued for all vehicles

– Disconnect connectors:

1 - For turbocharger air recirculation valve - N249-

2 - For Hall sender 3 - G300-

3 - For the fuel metering valve - N290-

– Unplug electrical connectors -arrows- at actuators for camshaft adjustment.

– Remove bolt -5- and move earth wiring clear.

– Move electrical wiring harness clear at clip -4- and swivel it forwards.

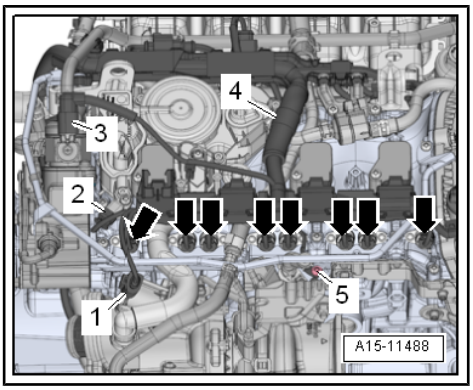

– Release fastener -arrow-, detach wiring duct upwards from bracket and press forwards.

CAUTION

Risk of damage to coolant pipes caused by deformation.

– Never attempt to reshape the coolant pipe.

– Unscrew bolts -1, 2 and 3-, and carefully swivel coolant line towards rear slightly.

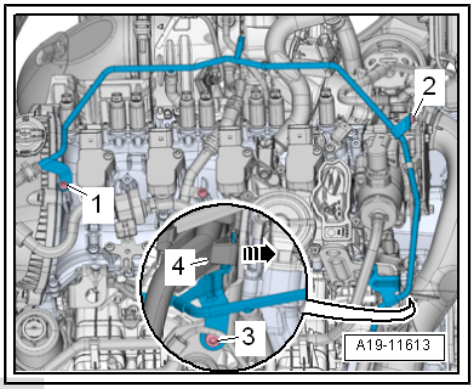

– Unplug electrical connector -1- at activated charcoal filter system solenoid valve 1 - N80- .

– Press release tabs on crankcase breather hose -2- and detach hose.

– Remove bolts -arrows- and remove the crankcase breather system.

– Remove high-pressure pump ⇒ page 381 .

– Remove vacuum pump ⇒ page 115 .

– Remove engine bracket ⇒ page 45 .

– Remove front part of right wheel housing liner ⇒ General body repairs, exterior; Rep. gr. 66 ; Wheel housing liners; Removing and installing front wheel housing liner .

– Remove engine support ⇒ page 69 .

– Remove the upper cover of the distribution chain ⇒ page 121 .

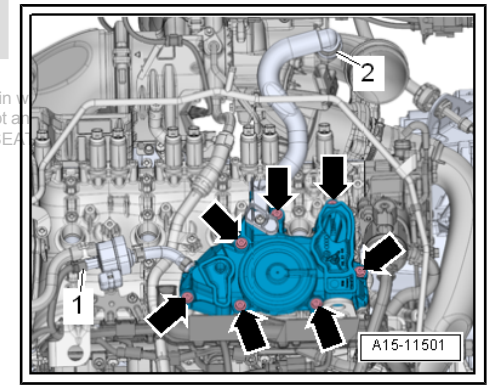

– Turn vibration damper to “TDC” position using counter-hold tool - T10355- .

- The markings -1- on the camshaft chain sprockets must be aligned with markings -2- and -3-.
- The notch on the vibration damper must align with the marking on the lower timing chain cover -arrow-.

– Remove the lower cover of the distribution chain ⇒ page 123 .

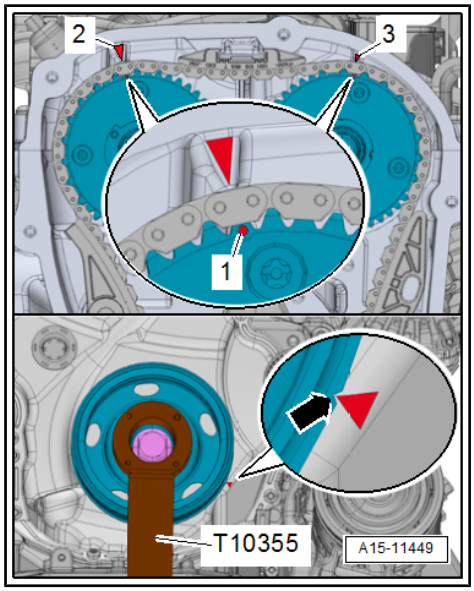

Note

The timing valves have a left-hand thread.

– Turn assembly tool -T10352/2- in direction of -arrow- to remove timing valves (left and right).

Depending on the current model version of the timing valve, one of the tools shown must be used:

- ♦ Installation tool - T10352-
- ♦ Installation tool - T10352/1-
- ♦ Installation tool - T10352/2-
- ♦ Installation tool - T10352/3-
- ♦ Installation tool - T10352/4-

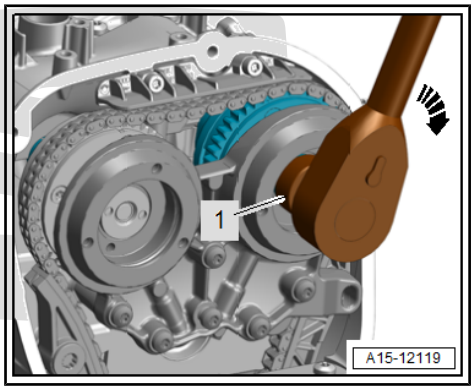

– Remove bolts -arrows- and detach bearing saddle.

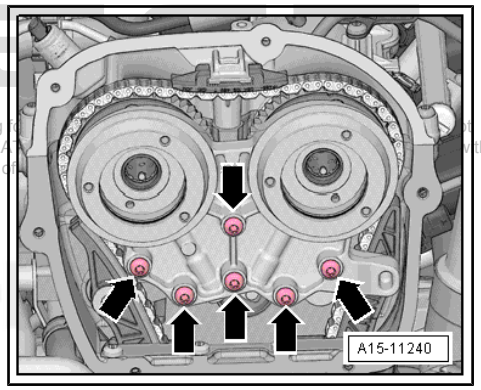

– Remove bolts -arrows-.

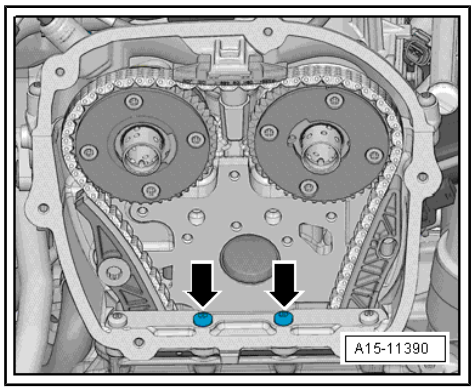

– Screw in the assembly lever - T40243- -arrow-.
– Compress and insert circlip -1- for chain tensioner.
– Slowly press the assembly lever - T40243- in the -arrow direction- and leave it in this position.

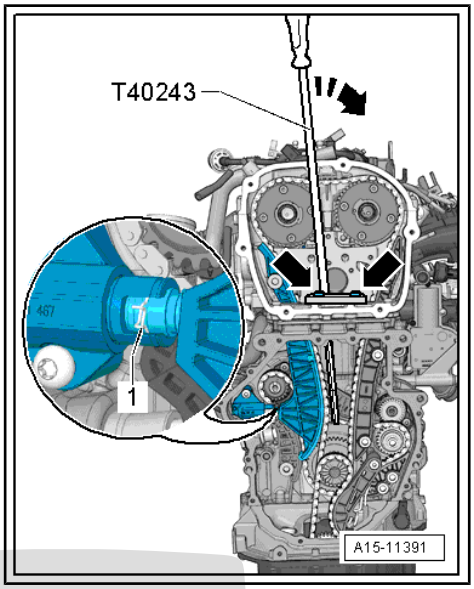

– Lock tensioner using the dowel pin - T40267- .
– Remove assembly lever - T40243- .

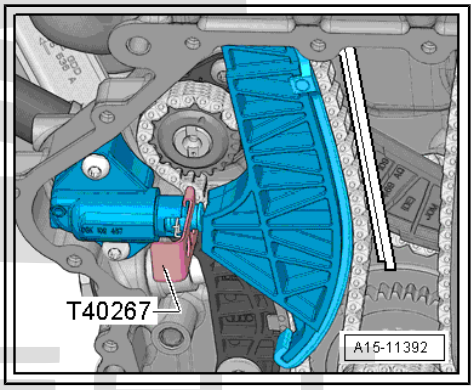

– Screw camshaft clamp - T40271/2- onto cylinder head, and insert it in splines of chain sprocket (direction of arrow -2-). If necessary, turn inlet camshaft using assembly tool - T40266- -arrow 1-.

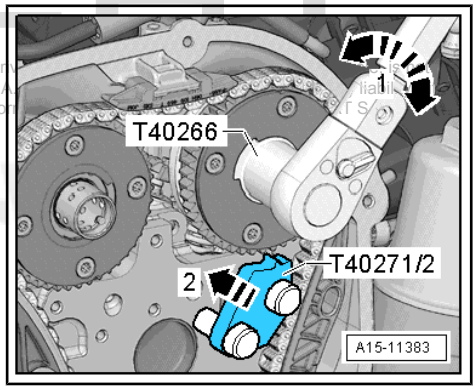

– Bolt camshaft clamp - T40271/1- onto cylinder head.

A second mechanic is required for the following work step.

– Using assembly tool - T40266- , locate exhaust camshaft in direction of arrow -A-. Remove bolt -1- and detach tensioning rail -2- downwards. Turn exhaust camshaft clockwise -A- until camshaft clamp - T40271/1- can be inserted in teeth of chain sprocket -B-.
– Check installation position -C- of camshaft clamp - T40271/1- .

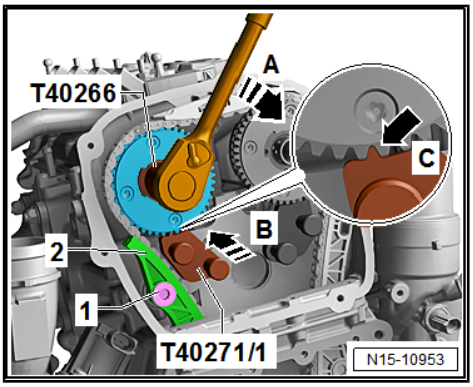

– Remove guide rail -1-. To do this, use a screwdriver to release catch -arrow-, and press off guide rail forwards.

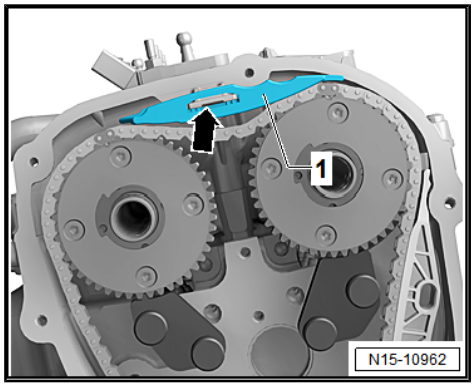

– Press retainer for oil pump chain tensioner in -direction of arrow- and lock in place using dowel pin - T40011- .

– Unscrew bolt -1-, and remove chain tensioner.

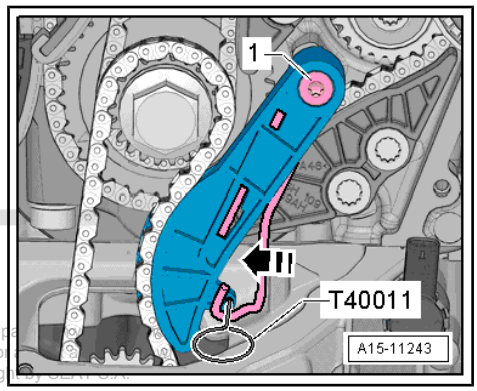

– Unscrew bolts -1-, and remove guide rail -2-.

– Remove camshaft timing chain from camshaft sprockets, and guide it downwards.

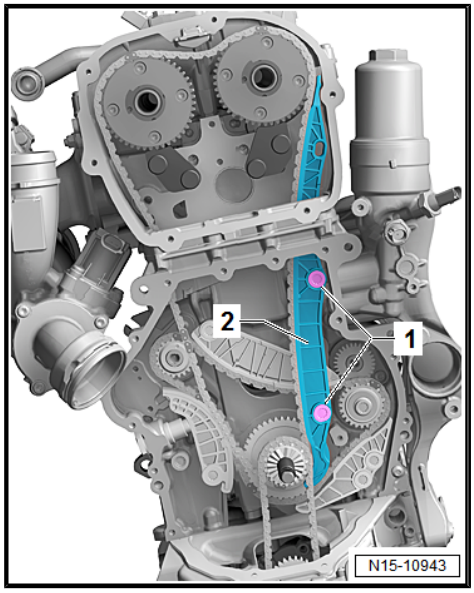

– Fit turning over tool - T10531/3- . At “TDC position” the flat section -1- faces upwards. Screw on flange nut - T10531/4- . Turn crankshaft with a 32 mm open-end spanner anti-clockwise to move it out of “TDC position”.

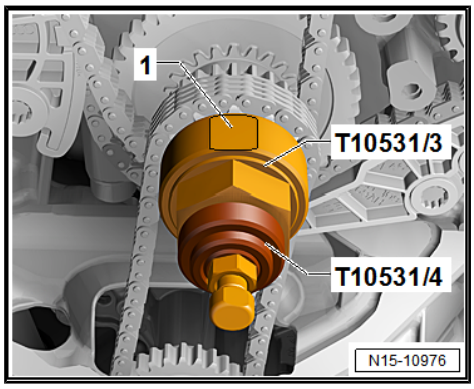

– Using assembly tool - T40266- , turn inlet camshaft in direction of arrow -1-. Press camshaft clamp - T40271/2- -2- out of sprocket teeth and move camshaft to rest position.

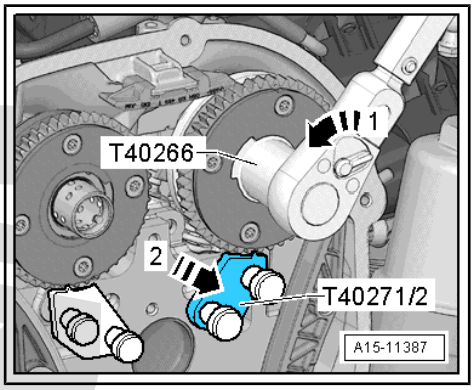

– Using assembly tool - T40266- , turn exhaust camshaft in direction of arrow -1-. Press camshaft clamp - T40271/1- -2- out of sprocket teeth and move camshaft to rest position.

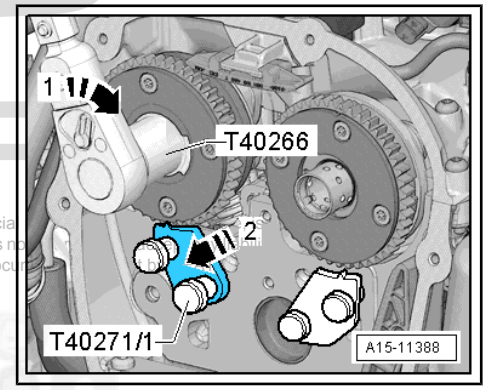

– Unscrew cylinder head cover bolts in the sequence -1 … 6-.

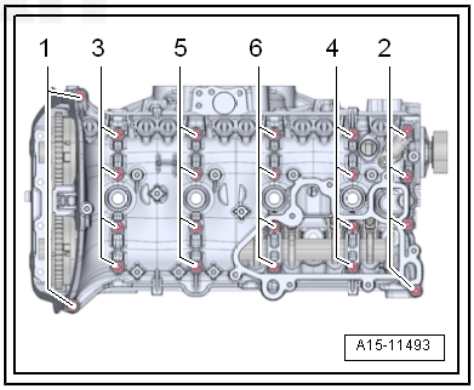

– Take out cylinder head cover -2- with a tool such as screwdriver -1-, beginning from the chain side.

– Remove camshafts, and cover open parts of engine.

Fitting

Note

- *The sealing surfaces must be free of oil and grease.*
- *Ensure that all the roller rocker fingers are correctly supported on the ends of the valve stems.*

– If crankshaft has been rotated: set No. 1 cylinder piston to top dead centre and then turn crankshaft back slightly.

– Remove sealant residue from groove in cylinder head cover and from sealing surfaces.

– Clean sealing surfaces; they must be free of oil and grease.

– Oil the camshaft contact surfaces.

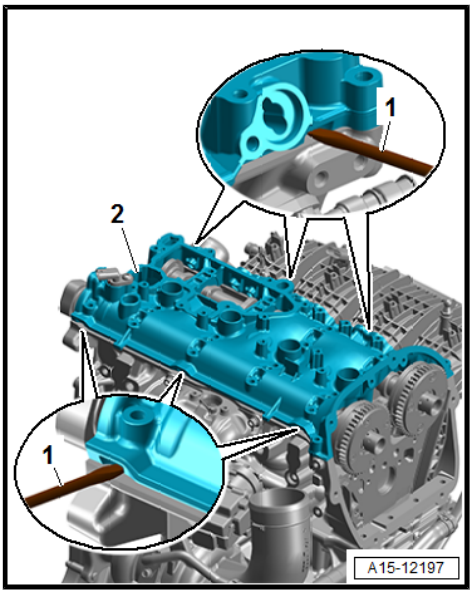

– Fit inlet camshaft -A- in cylinder head. Turn cams for cylinder 4 -arrows- upwards.

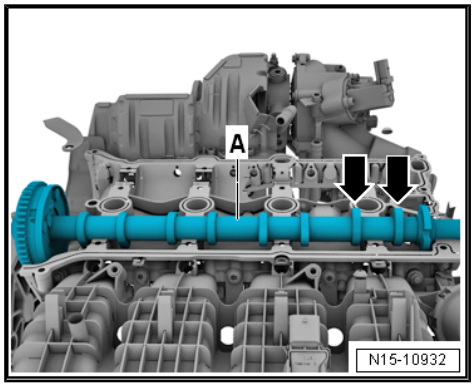

– Check whether the plungers of the actuators for cam adjustment are retracted.

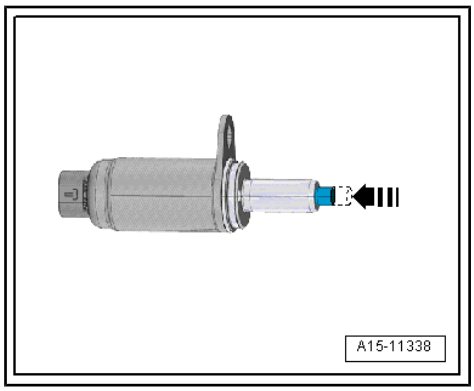

– Fit exhaust camshaft in cylinder head cover as shown in illustration. Push cam pairs -A and B- towards each other.

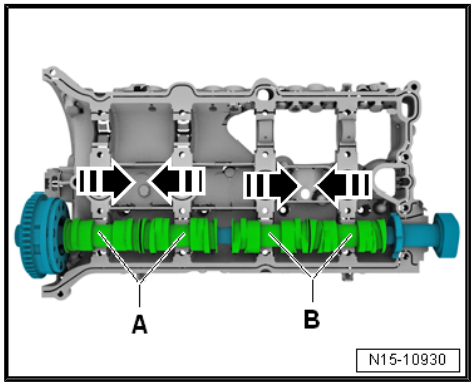

– Turn exhaust camshaft until markings -A- and -B- are properly aligned.

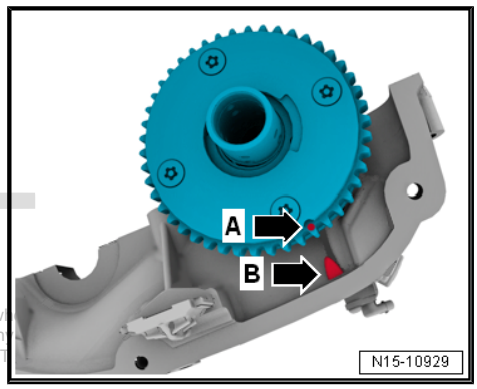

– Apply sealant onto clean sealing surface of cylinder head cover, as shown in illustration -arrows-.

♦ Thickness of sealant bead: 2 to 3 mm.

– Hold camshaft in place, and fit cylinder head cover with camshaft fitted on cylinder head.

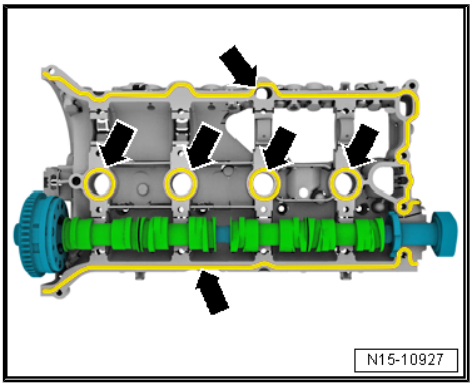

– Slightly press on cylinder head cover with one hand, and turn camshafts slightly while doing so, until cylinder head cover is properly seated on cylinder head and is »free of stress«.

– Renew bolts for cylinder head cover.

– Tighten bolts in several stages; tightening sequence ⇒ page 155

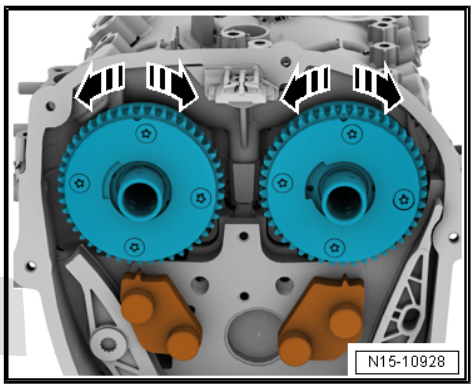

Note

Take care to keep cylinder head cover straight.

– Turn inlet camshaft in -direction of arrow A- using assembly tool - T40266- until the markings -1- and -2- align. Insert camshaft clamp - T40271/2- between teeth of chain sprocket -B-.

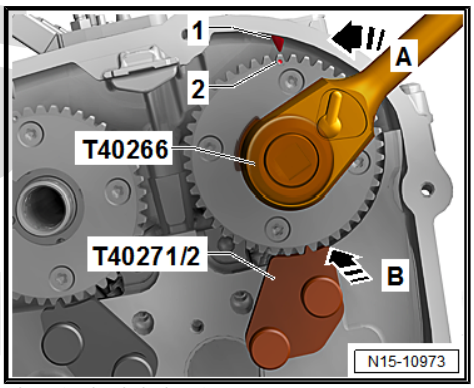

– Turn exhaust camshaft in -direction of arrow A- using assembly tool - T40266- until the markings -1- and -2- align. Insert camshaft clamp - T40271/1- between teeth of chain sprocket -B-. Marking -2- is slightly offset towards right.

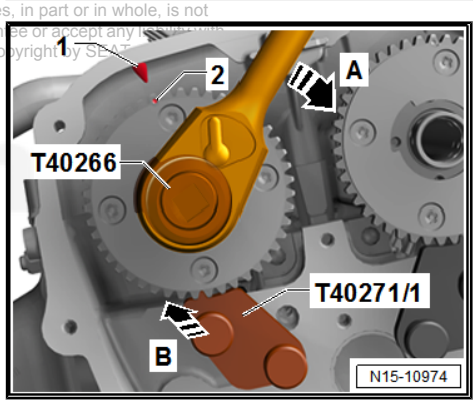

– Turn crankshaft on hexagon to “TDC position”. At “TDC position” the flat section -1- faces upwards.

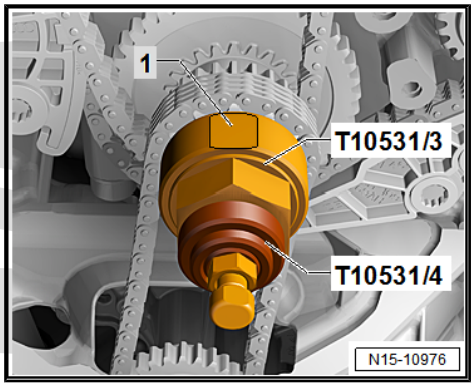

Installing camshaft timing chain

– Fit camshaft timing chain onto camshaft journals with coloured markings -arrows- properly aligned.

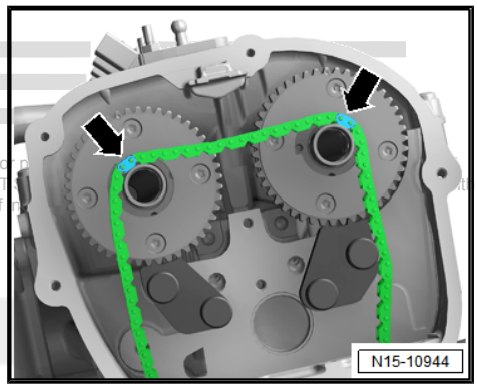

– Fit camshaft timing chain on inlet camshaft, exhaust camshaft and crankshaft. Position chain links with coloured markings -arrows- at the markings on chain sprockets.

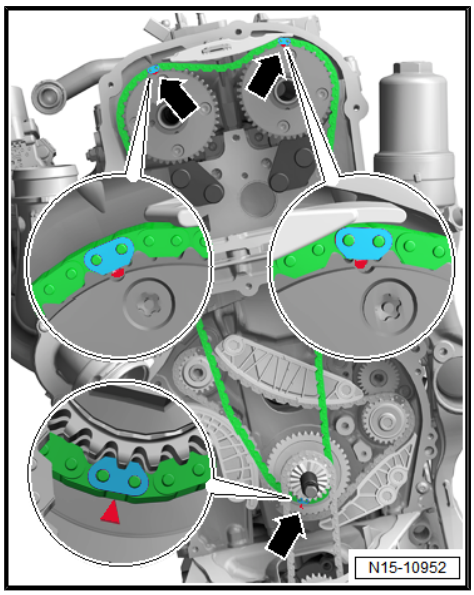

– Install guide rail -2-, and tighten bolts -1-.

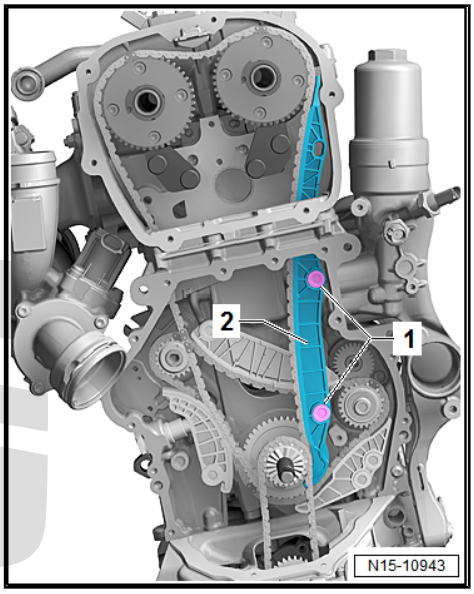

– Install upper guide rail -1-.

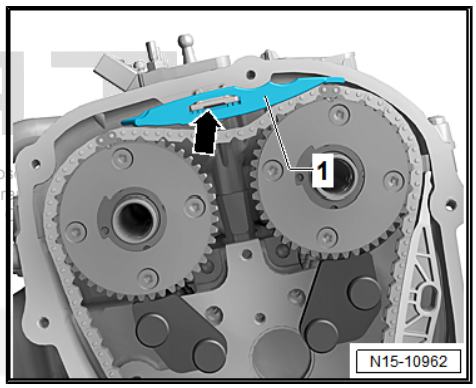

A second mechanic is required for the following work step.

I - Turn exhaust camshaft in -direction of arrow A- using assembly tool - T40266- , and remove camshaft clamp - T40271/1- from between teeth of chain sprocket -B-.

II - Release tension from camshaft in -direction of arrow C- until timing chain rests against guide rail -1-. Hold camshaft in this position, install tensioning rail -2-, and tighten bolt -3-. Then, relieve tension from camshaft.

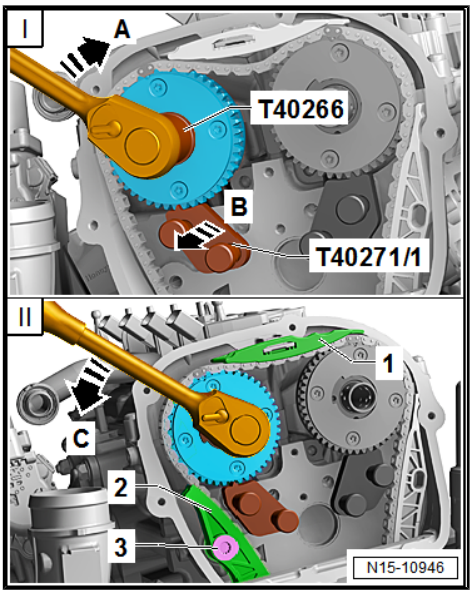

Note

If the camshaft is not counterheld until the tensioning rail has been installed, the timing chain may slip.

– Using assembly tool - T40266- , turn inlet camshaft in direction of -arrow 1- until camshaft clamp - T40271/2- can be removed from between teeth of chain sprocket in direction of arrow -2-. Then, relieve tension from camshaft.

– Remove camshaft clamp - T40271/1- and -T40271/2- .

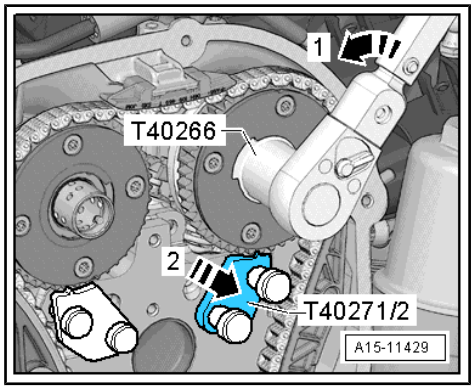

– Fit and tighten bolts -arrows-. Specified torque ⇒ Item 4 (page 106) .

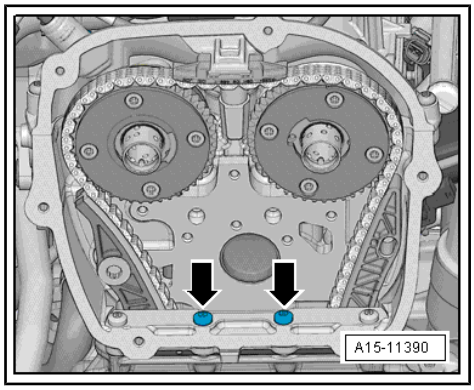

– Lubricate holes -arrows- with engine oil.

Note

If a spring pin -1- is fitted, and if the bearing saddle is to be re-installed, the spring pin must be driven back. Clamping sleeve must be flush with bearing saddle at cylinder head end.

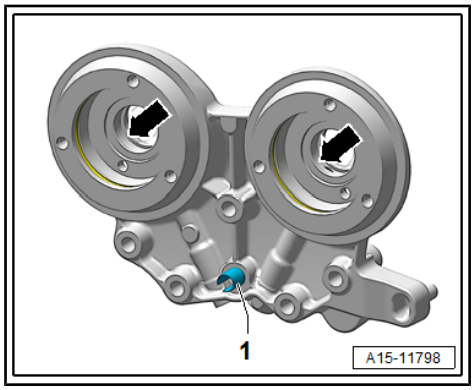

– Fit bearing saddle. Do not cant bearing saddle, while doing so. Screw in bolts -1...6- by hand.

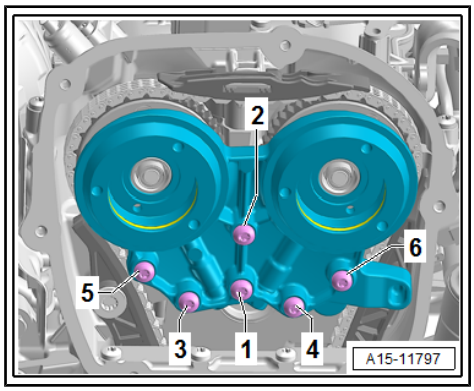

– Remove the Pinning tool - T40267- .

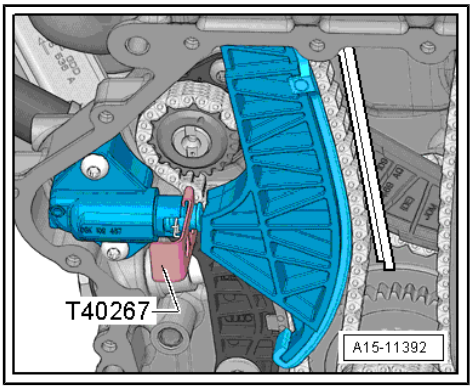

– Tighten bolts -arrows- for bearing saddle ⇒ Item 5 (page 129) .

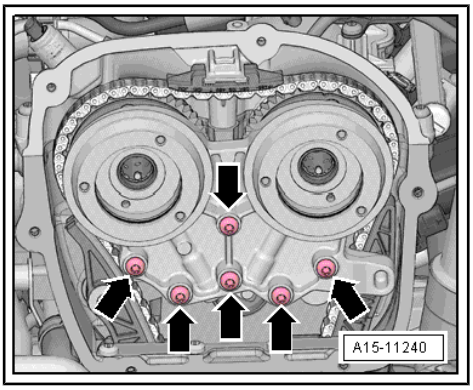

– Install chain tensioner -2-. The retaining clip -arrow- must be seated in recess in upper part of sump. Tighten bolt -1- and remove dowel pin - T40011- .

– Make sure that adjustment has been carried out correctly: chain links with coloured markings -arrows- must be positioned at markings on chain sprockets.

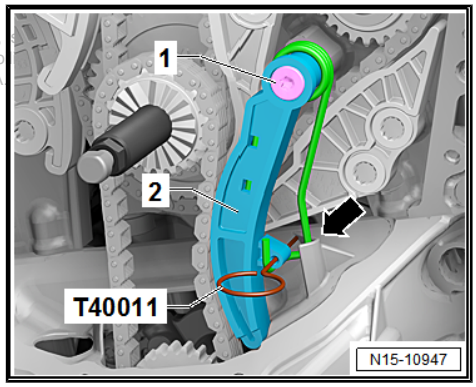

– Make sure that adjustment has been carried out correctly: chain links with coloured markings -arrows- must be positioned in alignment with markings on chain sprockets.

– Install timing valves ⇒ Item 7 (page 129) .

– Turn engine two revolutions in direction of engine rotation.

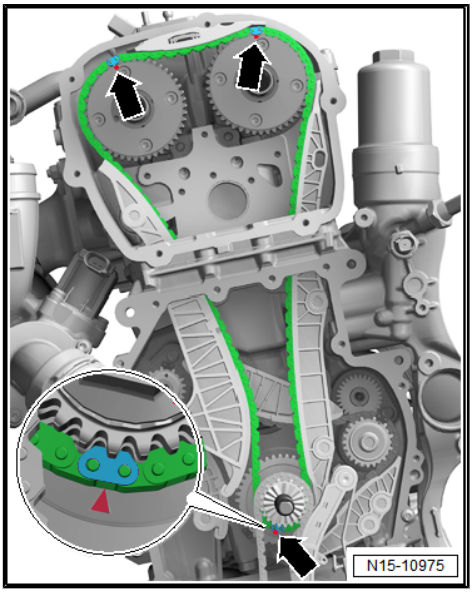

Note

Due to the power transmission, the coloured chain links no longer align after engine rotation.

– Unscrew flange nut - T10531/4- , and remove turning over tool - T10531/3- .

– Fit the lower cover of the distribution chain ⇒ page 123 .

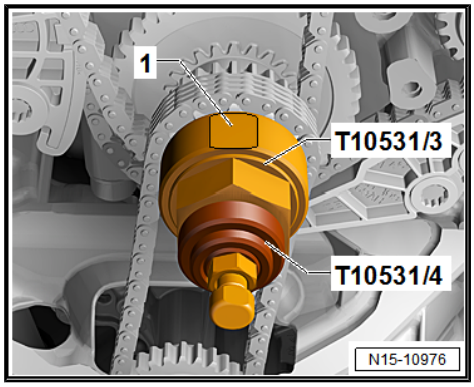

Note

Do not tighten bolts -1 and 4- with turning further angle until after the vibration damper has been installed. The bolts must be unscrewed again for installing the vibration damper.

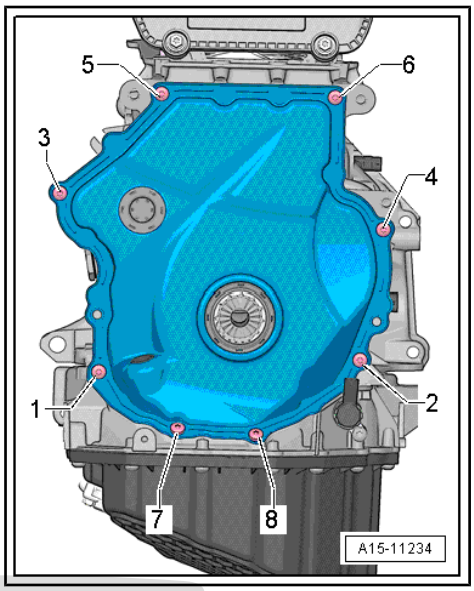

– Fit the vibration damper ⇒ page 61 .

– Install timing chain cover (top) ⇒ page 121 .

– Install poly V-belt tensioner ⇒ page 61 .

– Fit poly V-belt ⇒ page 60 .

– Install vacuum pump ⇒ page 115 .

– Install high-pressure pump ⇒ page 381 .

– Install windscreen washer tank ⇒ Electrical system; Rep. gr. 92 ; Windscreen washer system; Overview - windscreen washer system .

Remaining installation sequence carried out in reverse sequence; note the following:

– After working on the chain drive, adapt learnt values in engine control unit. To do this, switch on ignition and select the following menu item in the vehicle diagnostic and service information system :

◆ `0001 - Adaption diagnosis chain length`

Specified torques

◆ ⇒ “3.1 Assembly overview - camshaft timing chains”, page 128

◆ ⇒ “3.2 Assembly overview - drive chain for balancer shaft”, page 130

◆ ⇒ “4.1 Assembly overview - valve gear”, page 153

◆ ⇒ “1.1 Exploded view - cylinder head”, page 105

◆ ⇒ “3.1 Exploded view - air cleaner housing”, page 355

◆ ⇒ “7.1 Exploded view - high-pressure pump”, page 380

◆ ⇒ General body repairs, exterior; Rep. gr. 66 ; Noise insulation; Assembly overview - noise insulation

4.2.3 Removing and installing camshaft, version B

Special tools and workshop equipment required

- Assembly tool - T10352A-

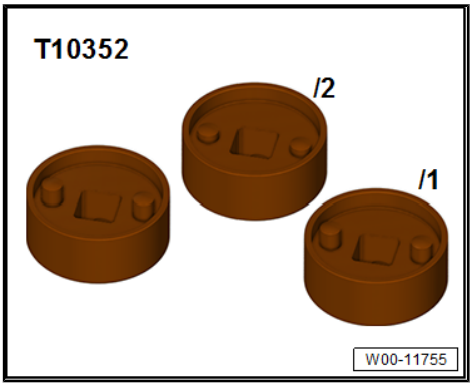

- Assembly tool - T10352/1-
- Assembly tool - T10352/2-
- Assembly tool - T10352/3-
- Assembly tool - T10352/4-
- Assembly lever - T40243-

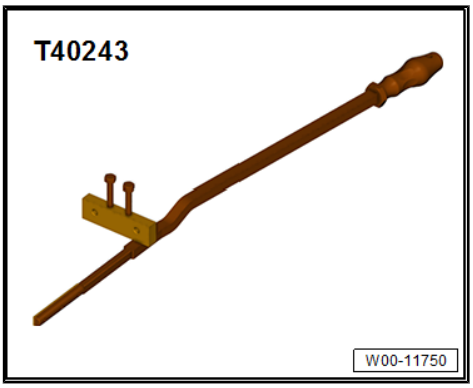

- Assembly tool - T40266-

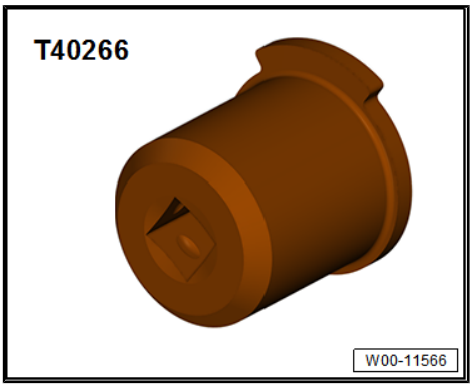

- Measuring tool - T40267-

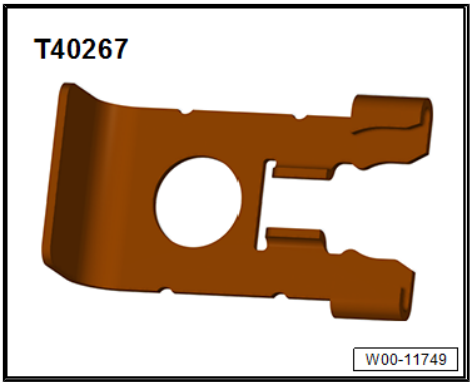

- Camshaft clamp - T40271-

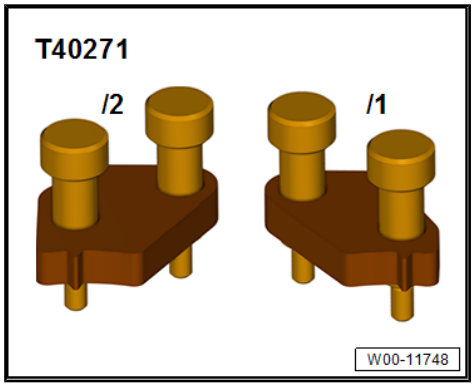

- Cable support bracket - T10355-

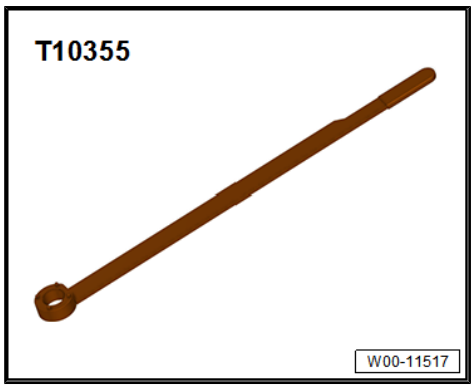

- Engine bung set - VAS 6122-

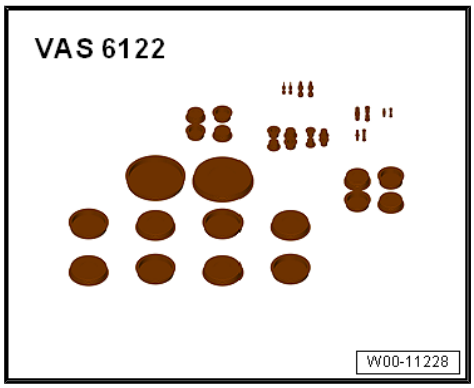

- Sealant ⇒ Electronic parts catalogue (ETKA)

Removing

Note

- *All cable ties must be installed in their same place again.*
- *Sealing surfaces at bottom of cylinder head cover and top of cylinder head must not be machined.*
- *The camshaft bearings are integrated into the cylinder head and cylinder head cover. The camshaft timing chain must be relieved of tension before you remove the cylinder head cover.*

– Remove noise insulation -1- ⇒ General body repairs - exterior installation work; Rep. gr. 66 ; Noise insulation; Removing and installing noise insulation .

– Remove air filter housing ⇒ page 356 .

– Remove the upper cover of the distribution chain ⇒ page 121 .

– Remove coolant pipe (top) ⇒ page 289 .

– Remove ignition coils ⇒ page 452 .

Vehicles with windscreen washer tank, right side:

– Remove windscreen washer tank filler -2- ⇒ Electrical system; Rep. gr. 92 ; Windscreen washer system; Removing and installing tank for windscreen washer system .

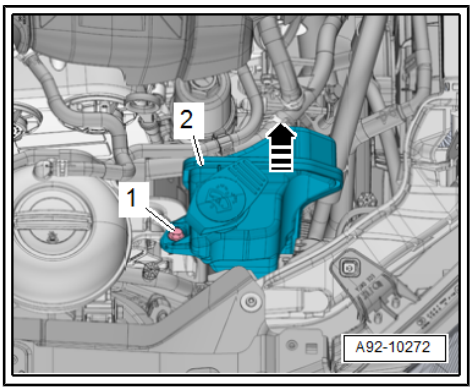

For vehicles with particulate filter

– Disconnect electrical connector -arrow-from pressure differential sender for particulate filter - G1037- .

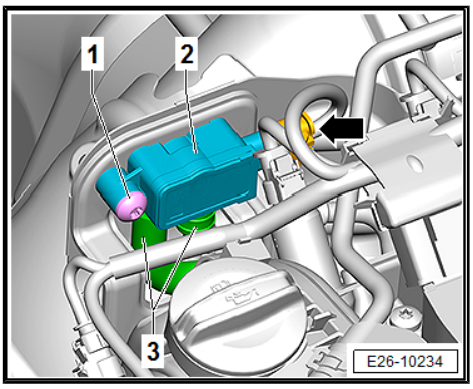

Continued for all vehicles

– Disconnect connectors:

1 - For turbocharger air recirculation valve - N249-

2 - For Hall sender 3 - G300-

3 - For the fuel metering valve - N290-

– Unplug electrical connectors -arrows- at actuators for camshaft adjustment.

– Remove bolt -5- and move earth wiring clear.

– Move electrical wiring harness clear at clip -4- and swivel it forwards.

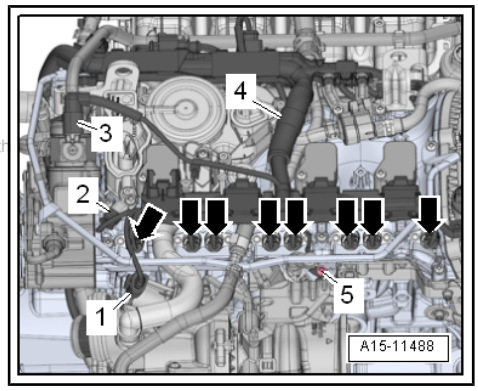

– Release fasteners -arrow-, detach wiring duct upwards from bracket and press forwards.

CAUTION

Risk of damage to coolant pipes caused by deformation.

– Never attempt to reshape the coolant pipe.

– Remove bolts -1, 2, 3- and carefully swivel coolant line towards rear slightly.

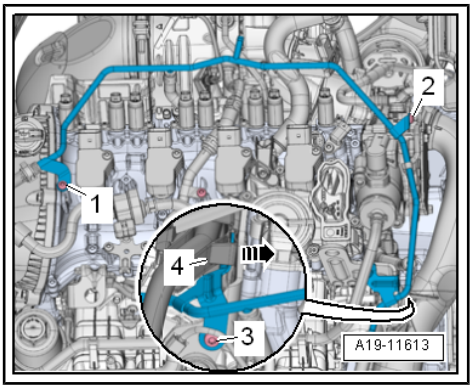

– Unplug electrical connector -1- at activated charcoal filter system solenoid valve 1 - N80- .

– Press release tabs on crankcase breather hose -2- and detach hose.

– Remove bolts -arrows- and remove the crankcase breather system.

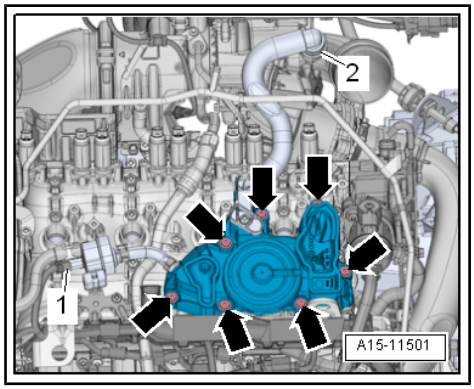

– Remove actuators for camshaft adjustment -arrows-.

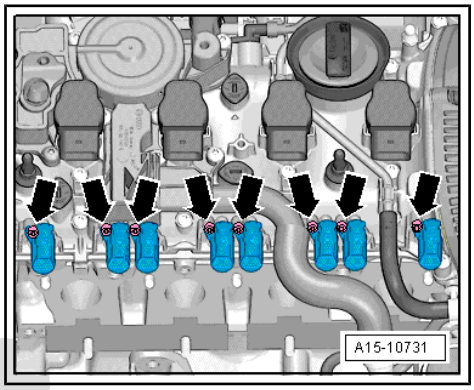

Note

The timing valves have a left-hand thread.

– Turn assembly tool -T10352/2- in direction of -arrow- to remove timing valves (left and right).

Depending on the current model version of the timing valve, one of the tools shown must be used:

- Installation tool - T10352-
- Installation tool - T10352/1-
- Installation tool - T10352/2-
- Installation tool - T10352/3-
- Installation tool - T10352/4-

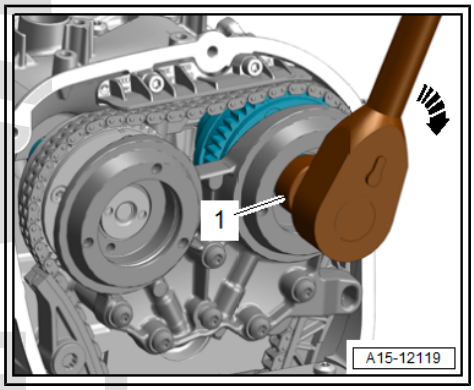

– Remove bolts -arrows- and detach bearing saddle.

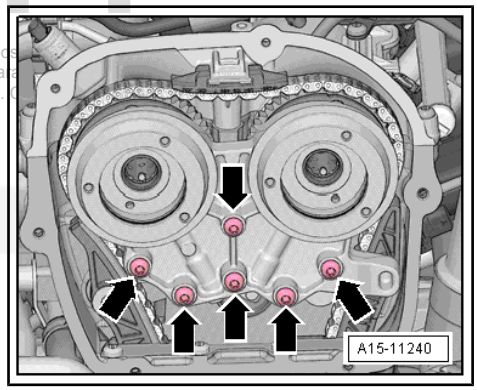

With markings on cylinder head

– Turn vibration damper to TDC position using counter-hold tool - T10355- .

- Notch on vibration damper must align with arrow marking on timing chain cover (bottom) -arrow-.
- Markings -1- on camshaft chain sprockets must be aligned with markings -2 and 3- on cylinder head.

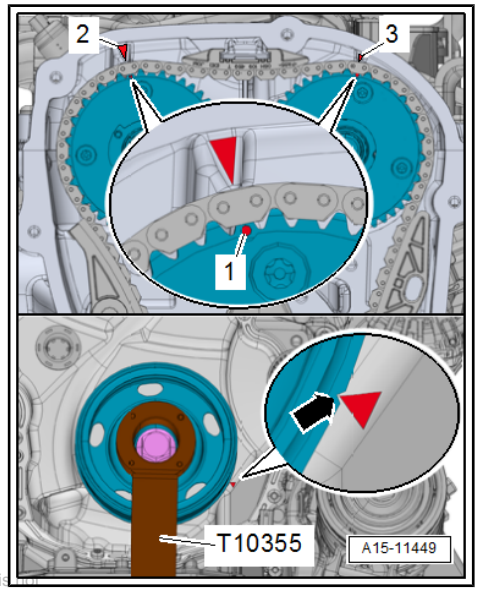

Without markings on cylinder head

– Turn vibration damper to TDC position using counter-hold tool - T10355- .

- Notch on vibration damper and marking on cover for timing chains (bottom) must be aligned -arrow-.
- The markings -1- on the camshafts must face upwards.

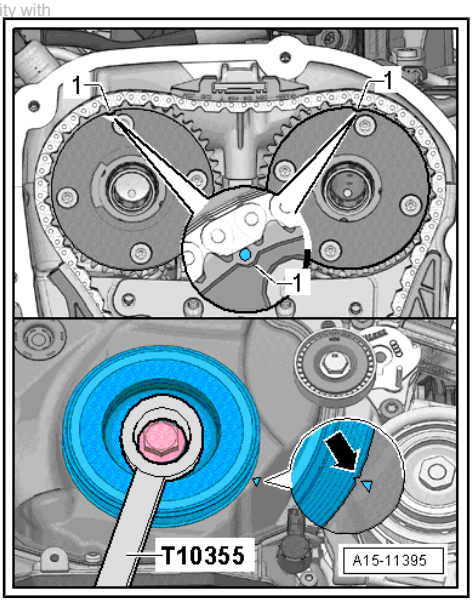

– Use a permanent marker to mark on the camshaft timing chain and the cylinder head-arrow- the matching with the chain sprockets -1-.

– Use a permanent marker to also mark the camshaft timing chain in coordination with the guide rail of the camshaft timing chain -2-.

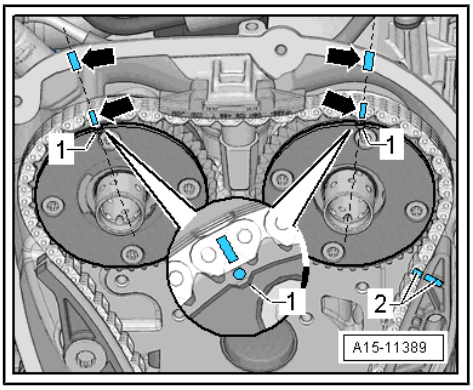

Continue for all engines

– Remove sealing plug -arrow-.

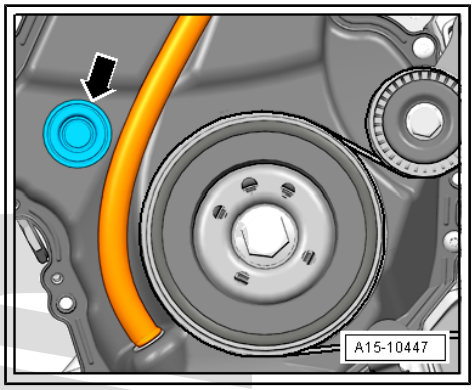

– Remove bolts -arrows-.

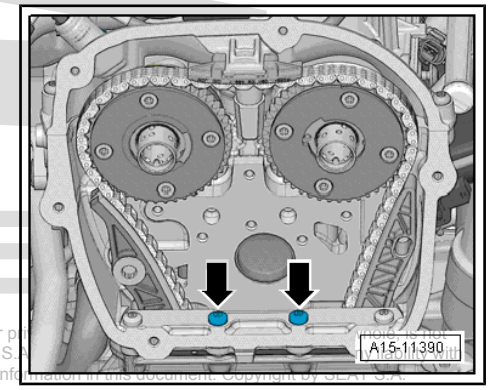

– Screw in the assembly lever - T40243- -arrow-.

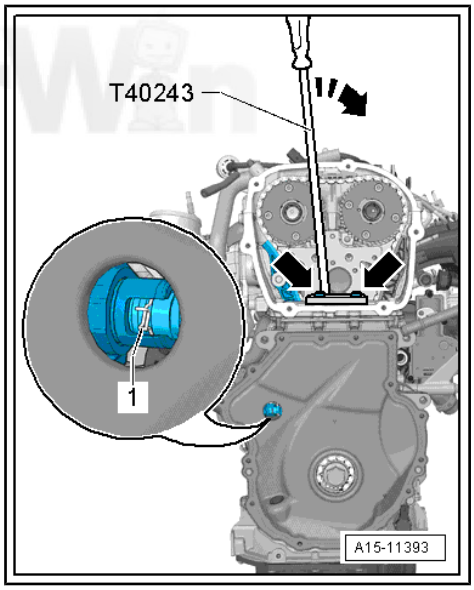

Note

A second mechanic is required for the following work steps.

– Compress and insert circlip -1- for chain tensioner.

– Slowly press the assembly lever - T40243- in the -arrow direction- and leave it in this position.

– Lock tensioner using the dowel pin - T40267- .

– Remove assembly lever - T40243- .

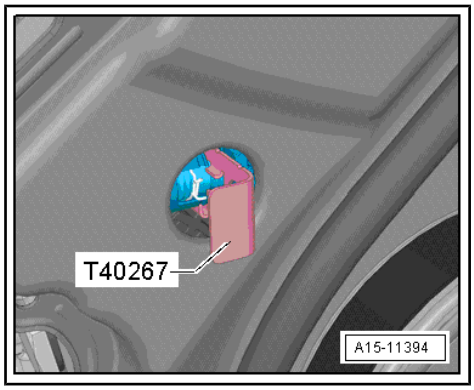

– Bolt camshaft clamp - T40271/2- to cylinder head and insert it between splines of chain sprocket in direction of -arrow 2-. If necessary, turn inlet camshaft in direction of -arrow 1- using assembly tool and adapter - T40266- .

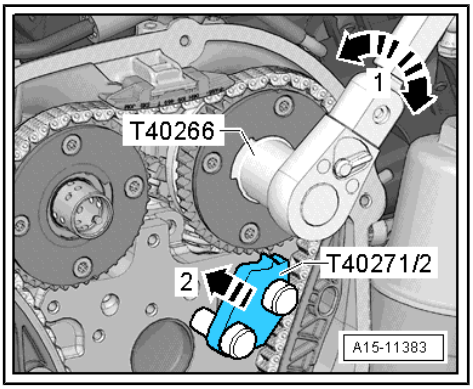

– Remove bolt -1- and detach tensioning rail -2- downwards.

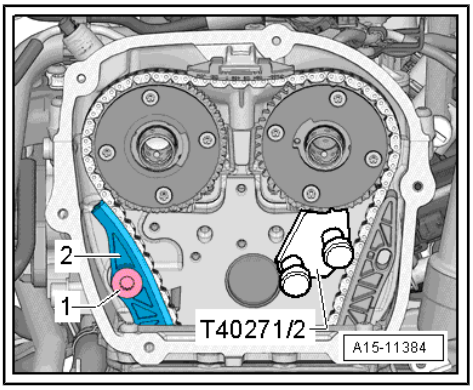

– Bolt camshaft clamp - T40271/1- onto cylinder head.

– Turn exhaust camshaft in direction of -arrow 1- using assembly tool and adapter - T40266- , and insert camshaft clamp - T40271/1- between splines of chain sprocket in direction of -arrow 2-.

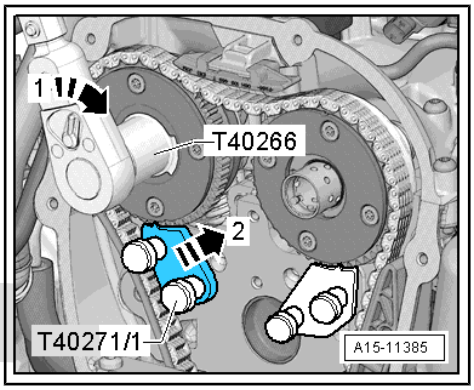

– Mark camshaft chain sprockets relative to camshaft clamp - T40271/1- and camshaft clamp - T40271/2- -arrows-.

– Remove top guide rail -1- by unlocking the raster element with a screwdriver and pressing the guide rail out forwards.

– Remove camshaft timing chain from camshaft sprockets.

– Turn vibration damper out of “TDC” in opposite direction of engine rotation.

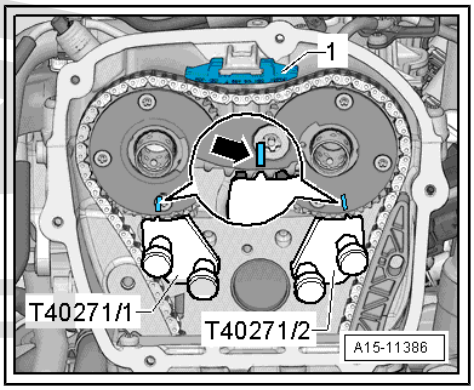

– Turn inlet camshaft in direction of -arrow 1- using assembly tool and adapter - T40266- , remove camshaft clamp - T40271/2- from between splines of chain sprocket in direction of -arrow 2- and bring camshaft into rest position.

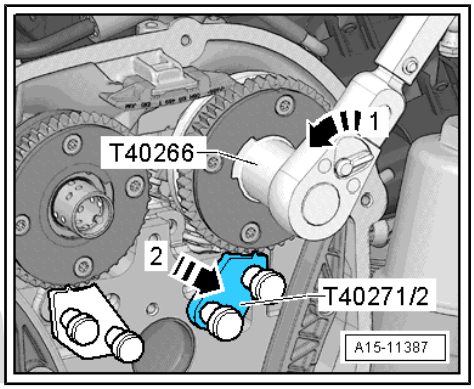

– Turn outlet camshaft in direction of -arrow 1- using assembly tool and adapter - T40266- , remove camshaft clamp - T40271/1- from between splines of chain sprocket in direction of -arrow 2- and bring camshaft into rest position.

– Remove high-pressure pump ⇒ page 381 .

– Remove vacuum pump ⇒ page 115 .

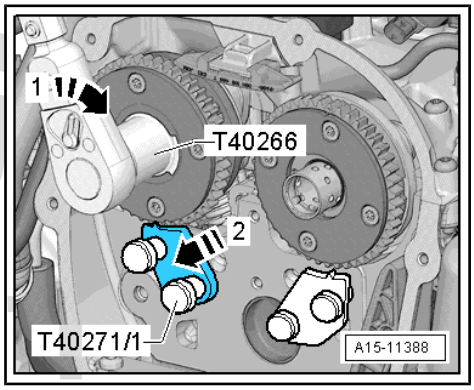

– Remove cylinder head cover bolts in the sequence -1 ... 6-.

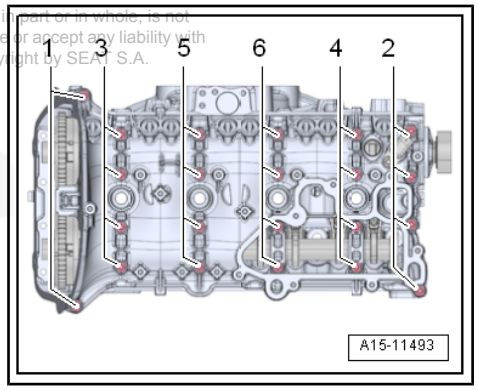

– Take out cylinder head cover -2- with a tool such as screwdriver -1-, beginning from the chain side.

– Remove camshafts, and cover open parts of engine.

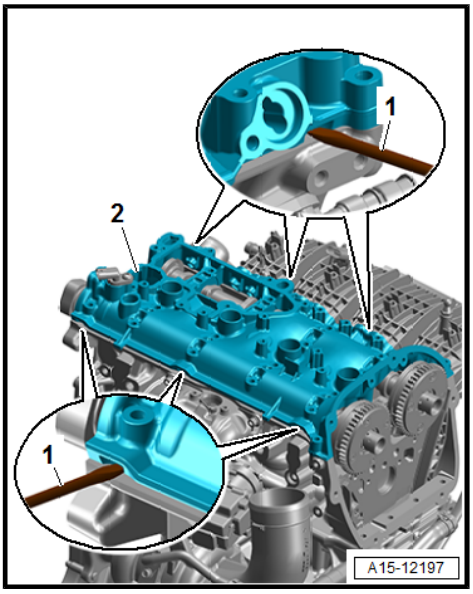

Fitting

Note

- *The sealing surfaces must be free of oil and grease.*
- *Ensure that all the roller rocker fingers are correctly supported on the ends of the valve stems.*
- *Crankshaft must not be at "TDC" position.*

– Eliminate the remains of sealant paste from the cylinder head with a flat rasp.

– If crankshaft has been rotated in the meantime: set No. 1 cylinder piston to top dead centre and then turn crankshaft back slightly.

– Remove sealant residue from groove in cylinder head cover and from sealing surfaces.

– Clean sealing surfaces; they must be free of oil and grease.

– Oil the camshaft contact surfaces.

– If camshafts are renewed, markings -arrow- must be transferred to new camshafts.

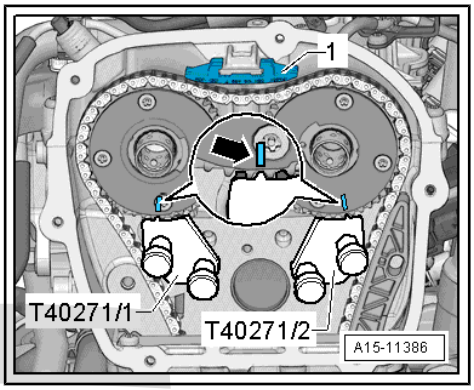

Note

- *Risk of damage to valves and piston crowns.*
- *When installing the camshafts, the crankshaft must not be in "TDC" position.*

– Fit inlet camshaft -A- in cylinder head. Turn cams for cylinder 4 -arrows- upwards.

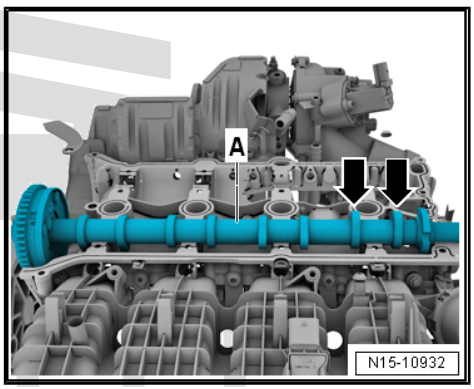

– Cut off nozzle of tube at front marking (nozzle dia. approx. 2 mm).

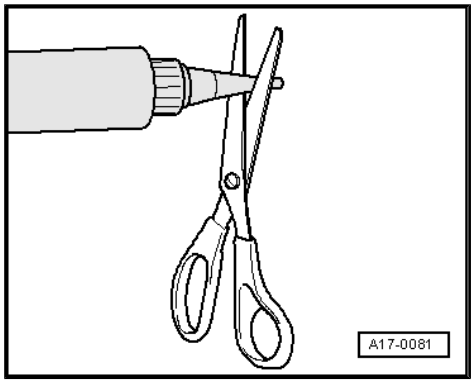

– Apply silicone sealant onto clean sealing surface of cylinder head cover, as illustrated -arrows-.

♦ Thickness of sealant bead: 2 to 3 mm.

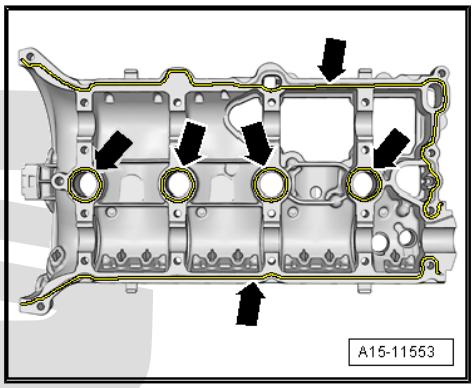

Note

♦ *The cylinder head cover must be installed within 5 minutes after applying the silicone sealant.*

♦ *The line of sealant must not be thicker than prescribed, as otherwise excessive sealant will enter the sump and obstruct the strainer in the oil intake pipe.*

♦ *Observe use-by date of sealant.*

Sealant ⇒ Electronic Parts Catalogue (ETKA) .

– Fit exhaust camshaft in cylinder head cover as shown in illustration. Push cam pairs -A- and -B- towards each other.

– Place cylinder head cover on cylinder head with camshaft fitted.

– Renew bolts for cylinder head cover.

– Tighten bolts in several stages; tightening sequence ⇒ page 155 .

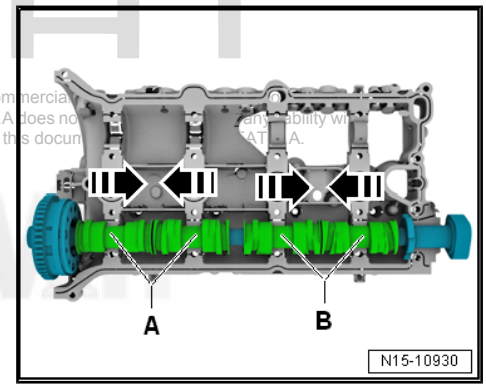

Note

Take care to keep cylinder head cover straight.

– Turn inlet camshaft in direction of arrow -1- until marking -3- aligns with camshaft clamp - T40271/2- .

– Insert camshaft clamp - T40271/2- between splines of chain sprocket in direction of -arrow 2-.

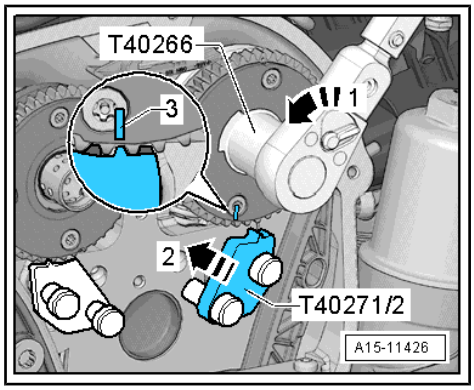

– Turn exhaust camshaft in -direction of arrow 1- until marking -3- aligns with camshaft clamp - T40271/1- .

– Insert camshaft clamp - T40271/1- between splines of chain sprocket in direction of -arrow 2-.

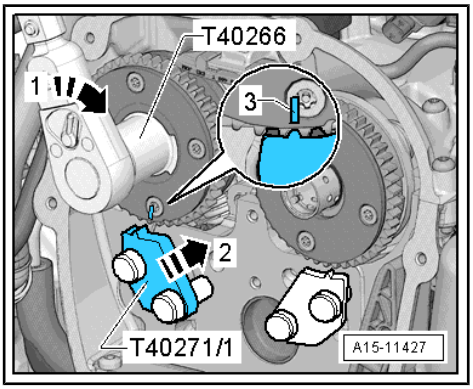

– Turn vibration damper to TDC position using counter-hold tool - T10355- .

• Notch on vibration damper and marking on cover for timing chains (bottom) must be aligned -arrow-.

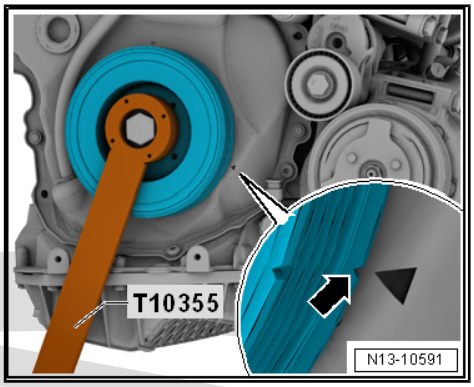

– Fit camshaft timing chain. When doing so, ensure that markings on chain links -arrows- align with markings on chain sprockets -1-.

– Install upper guide rail -2-.

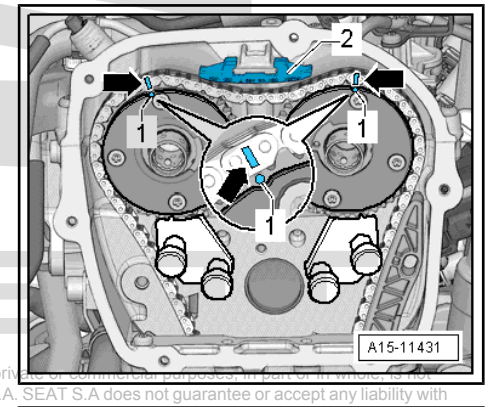

– Using assembly tool - T40266- , turn exhaust camshaft in direction of -arrow 1-. Remove camshaft clamp - T40271/1- from between splines of chain sprocket in direction of -arrow 2-, and relieve tension from camshaft.

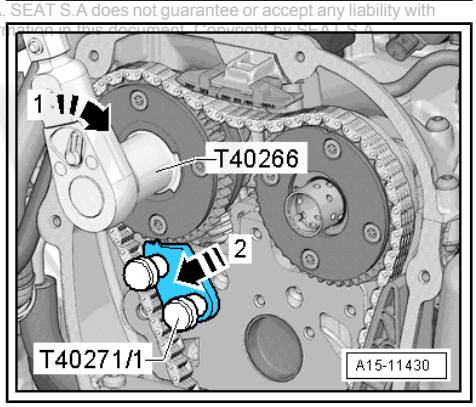

– Move guide rail -2- upwards and screw in bolt -1-.

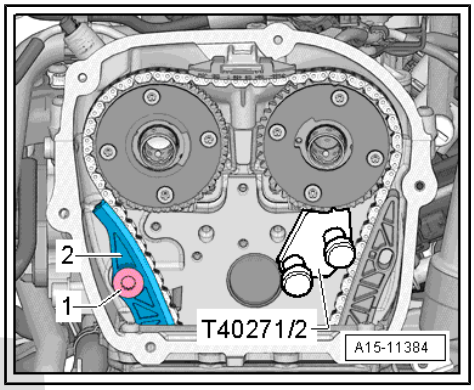

– Turn inlet camshaft in direction of -arrow 1- using adapter - T40266- , remove camshaft clamp - T40271/2- from between splines of chain sprocket in direction of -arrow 2- and bring camshaft into rest position.

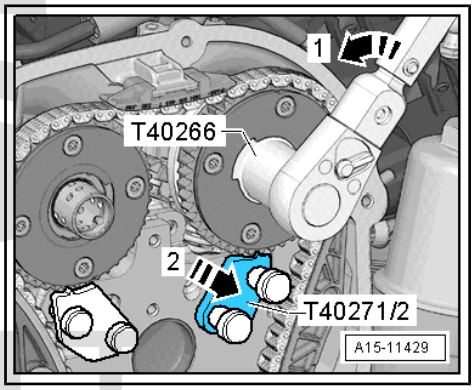

Checking valve timing - with markings on cylinder head

– Turn vibration damper to TDC position using counter-hold tool - T10355- .

- Notch on vibration damper must align with arrow marking on timing chain cover (bottom) -arrow-.
- Markings -1- on camshaft chain sprockets must be aligned with markings -2 and 3- on cylinder head.

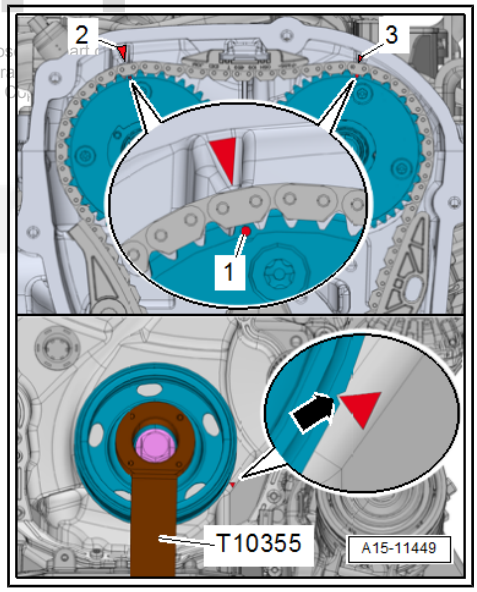

Checking valve timing - without markings on cylinder head

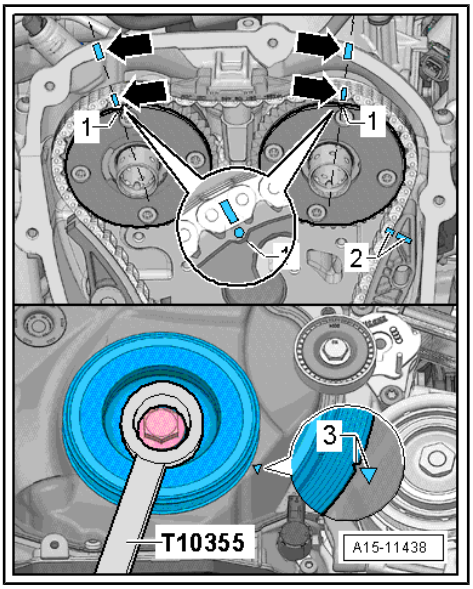

- Check valve timing; markings on camshaft timing chain and cylinder head -arrows- must align with markings on chain sprockets.
- The markings on the camshaft timing chain and the guide rails for the chain -2- must oppose each other.
- The notch on the vibration damper must oppose the marking on the lower cover of chain -3-.

Note

If the markings are not visible, check valve timing ⇒ page 148 .

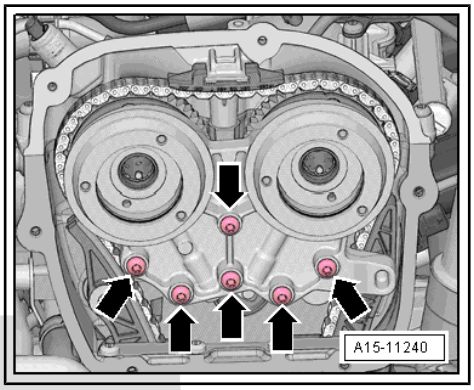

- Attach bearing saddle and screw in bolts -arrows- hand-tight.
- Remove the Pinning tool - T40267- .
- Tighten bolts -arrows- for bearing saddle ⇒ page 128 .
- Install timing valves ⇒ Item 7 (page 129) .
- Install timing chain cover (top) ⇒ page 121 .
- Install vacuum pump ⇒ page 115 .
- Install high-pressure pump ⇒ page 381 .
- Install windscreen washer tank ⇒ Electrical system; Rep. gr. 92 ; Windscreen washer system; Overview - windscreen washer system .
- After working on the chain drive, adapt learnt values in engine control unit. To do this, switch on ignition and select the following menu item in the vehicle diagnostic and service information system :

◆ `0001 - Adaption diagnosis chain length`

Further assembly is basically the reverse of the dismantling sequence.

Specified torques

◆ ⇒ “4.1 Assembly overview - valve gear”, page 153

◆ ⇒ “3.1 Exploded view - air cleaner housing”, page 355

◆ ⇒ “7.1 Exploded view - high-pressure pump”, page 380

4.3 Install ball for forked sleeve

Special tools and workshop equipment required

♦ Spacers - T40191-

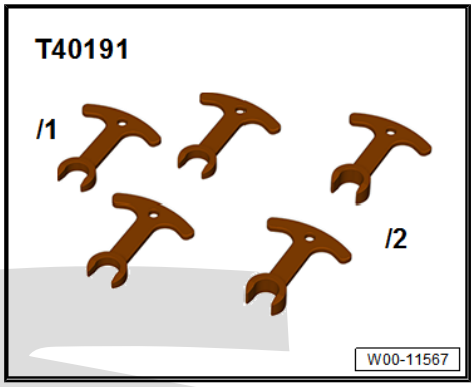

Fitting

CAUTION

The ball for the sliding piece may pop out! Risk of eye injury!
– Wear safety goggles.

– Place spring -1- in the camshaft.
– Place ball -2- onto the spring in the camshaft.
– Push down ball and spring with spacers - T40191/1- in -the direction of arrow A- and hold.
– Push forked sleeve -3- in -direction of arrow B-.

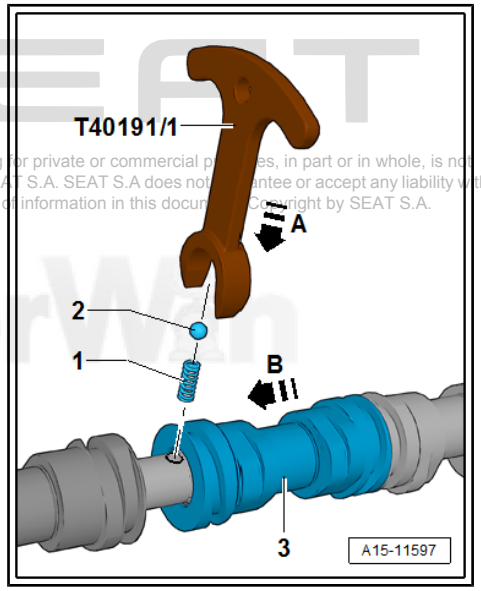

4.4 Removing and installing camshaft control valve 1 - N205-

The description of work refers to camshaft control valve 1 - N205- and to camshaft control valve 1 in the exhaust - N318- .

Removing

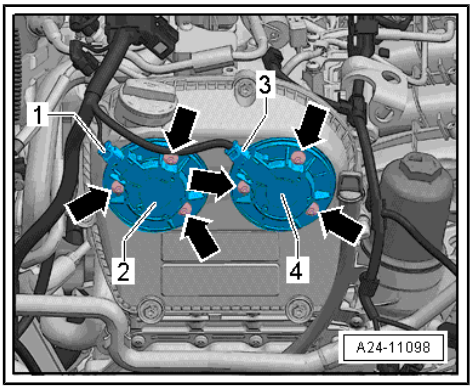

– Unplug connector -1- from exhaust camshaft control valve 1 - N318- and connector -2- from camshaft control valve 1 - N205- .

– Screw out bolts -arrows- and remove from camshaft adjuster valve 1 - N205- -Item 4- and camshaft adjuster valve 1 (in the exhaust) - N318- -Item 2-.

Fitting

Install in the reverse order of removal, observing the following:

Note

Renew seals and O-rings.

– Lubricate sealing surfaces of oil seals to inlet camshaft control valve 1 - N205- / exhaust camshaft control valve 1 - N318- with engine oil.

Specified torques

♦ ⇒ “2.1 Assembly overview - timing chain cover”, page 119

4.5 Removing and installing exhaust camshaft control valve 1 - N318-

Work sequence
⇒ “4.4 Removing and installing camshaft control valve 1 N205 ”, page 186

4.6 Removing and installing actuators for camshaft adjustment

Allocation

Removing

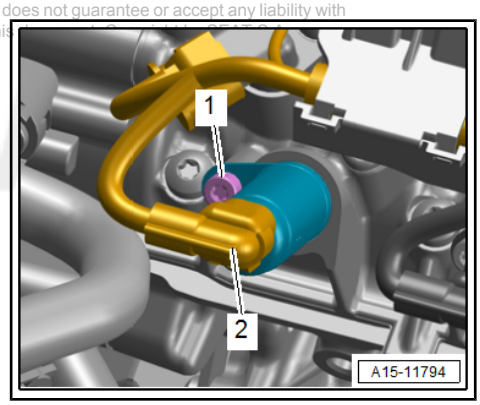

– Remove engine cover panel ⇒ page 57 .

– Unplug corresponding connector -2-.

– Unscrew bolt -1-, and remove actuator for camshaft adjuster.

Installing

Installation is carried out in the reverse order; note the following:

Note

Check for damage.

- Installation position of the actuators for camshaft adjuster.

– Press in pin of actuator for camshaft adjustment -arrow- by hand.

- The dowel pin of the actuator may not be in an unlocked position.

– Install engine cover panel ⇒ page 57 .

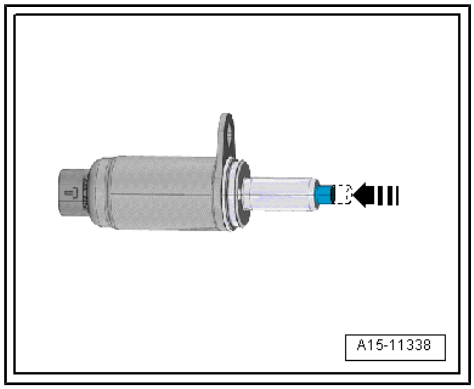

Specified torques

♦ ⇒ “4.1 Assembly overview - valve gear”, page 153

4.7 Removing and installing valve stem seals

⇒ “4.7.1 Removing and installing valve stem oil seals (cylinder head installed)”, page 188

⇒ “4.7.2 Removing and installing valve stem oil seals (cylinder head removed)”, page 193

4.7.1 Removing and installing valve stem oil seals (cylinder head installed)

Special tools and workshop equipment required

♦ Spark plug socket and extension - 3122B-

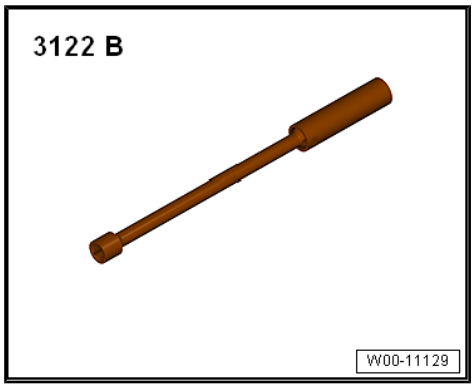

♦ Valve stem seal puller - 3364-

- Valve stem seal fitting tool - 3365-

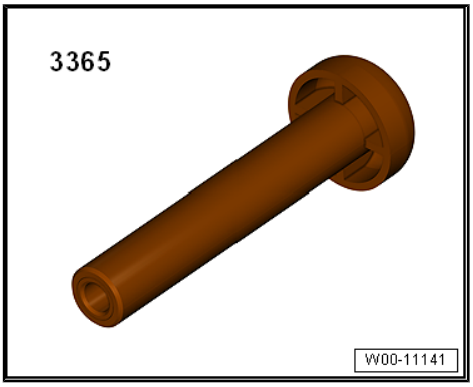

- Adapters - T40012-

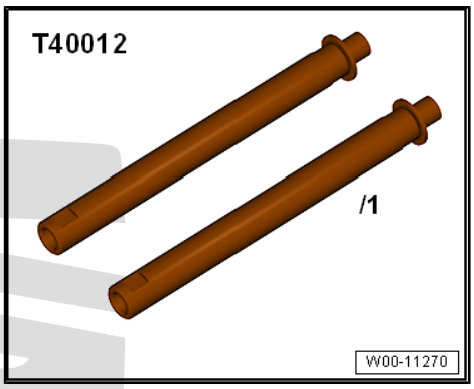

- Mounting and dismounting element for valve cotters - VAS 5161 A-

- Guide plate - VAS 5161/19C-
- Plastic sleeve ⇒ Electronic parts catalogue

Removing valve stem oil seals

– Remove camshafts ⇒ page 158 .

– Mark original positions of roller rocker fingers and hydraulic compensation elements for re-installation.

– Remove roller rocker fingers together with hydraulic compensation elements and place down on a clean surface.

– Remove the spark plugs with spanner - 3122 B- .

Reworking guide plate

Check if recess -arrow- is present.

– If necessary, rework guide plate - VAS 5161/19C- -arrow-, until it rests against cylinder head and guide plate -1- is free.

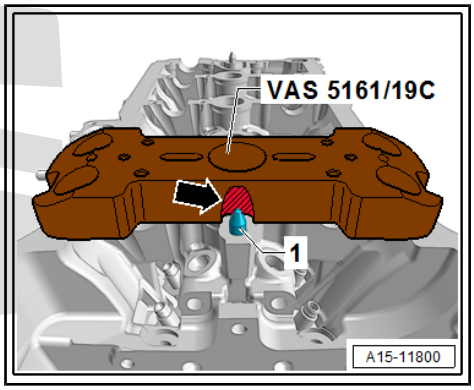

– Screw guide plate - VAS 5161/19C- to cylinder head, as shown in illustration, using knurled screws - VAS 5161/12- .

– Set piston of respective cylinder to “bottom dead centre”

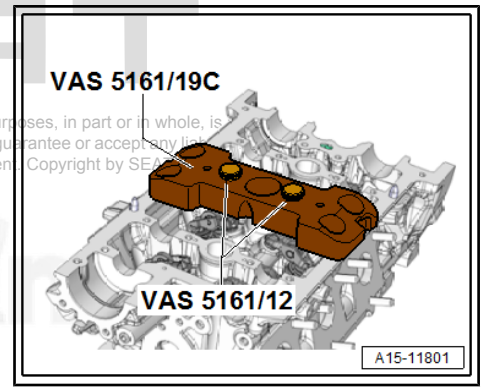

– Screw adapter - T40012- into spark plug thread.

– Connect to compressed air supply of at least 6 bar.

– Knock loose sticking valve cotters using punch - VAS 5161/3- and a plastic-headed hammer.

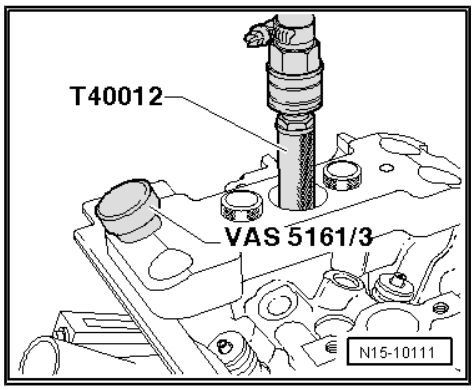

For inlet side

– Screw retainer - VAS 5161/6- with guide fork - VAS 5161/5- into centre thread of guide plate - VAS 5161/19C- .

– Insert the assembly cartridge - VAS 5161/8- in the guide plate - VAS 5161/19C- .

– Attach pressure fork - VAS 5161/2- to ratchet piece - VAS 5161/6- .

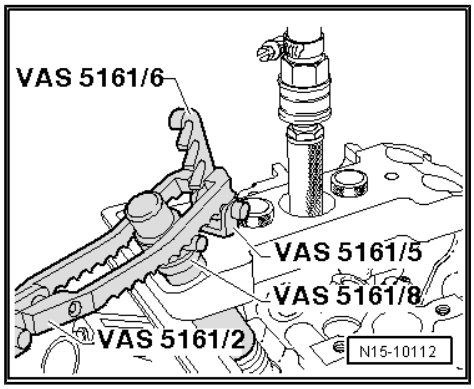

For exhaust side

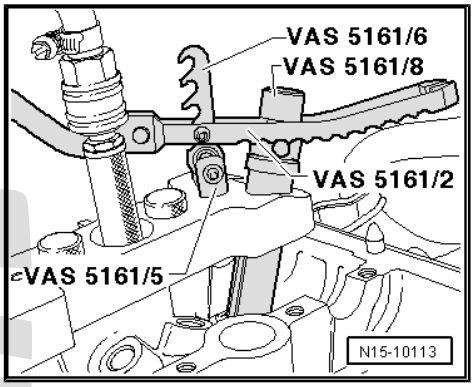

- Screw retainer - VAS 5161/6- with guide fork - VAS 5161/5- into outer thread of guide plate - VAS 5161/19C- .
- Press down assembly cartridge - VAS 5161/8- and at the same time, turn knurled screw of assembly cartridge - VAS 5161/8- clockwise until tips engage in valve cotters.
- Move knurled screw back and forth slightly. This causes the valve cotters to be pressed apart and taken into the assembly cartridge.
- Release pressure fork - VAS 5161/2- .
- Take out assembly cartridge - VAS 5161/8- .

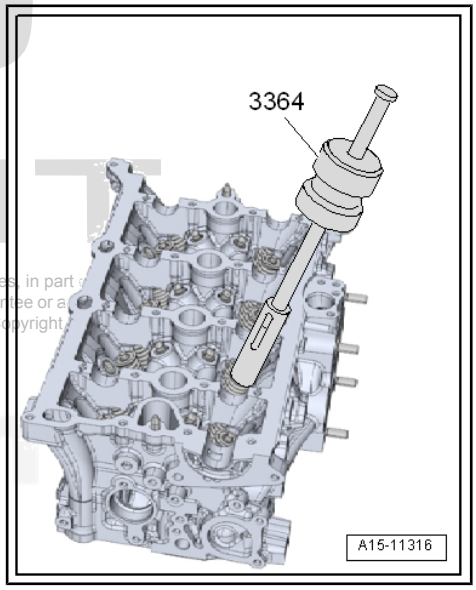

- Pull off valve stem seals using valve stem seal puller - 3364- .

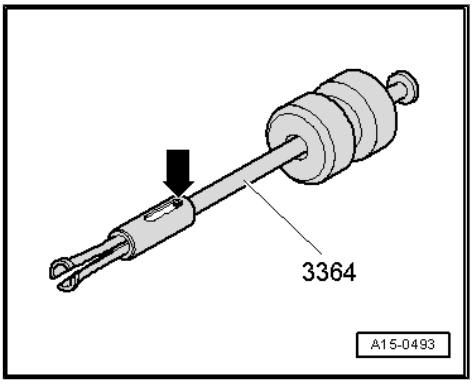

- If the extractor - 3364- cannot be used on account of restricted space, knock out pin -arrow- with a punch and remove the impact extractor attachment.

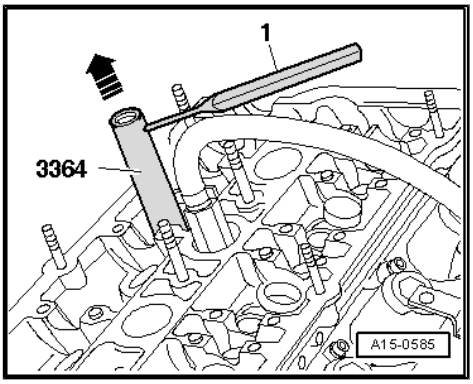

- Place lower part of valve stem seal puller - 3364- onto valve stem seal.
- Insert a punch -1- through hole in lower section of puller.
- Apply assembly lever to puller and pull out valve stem oil seal -arrow-.

- To ensure the new valve stem seal -4- is not damaged during installation, the plastic sleeve -3- must be mounted on the valve stem -2-.
- Distinguishing between valve stem oil seals ⇒ page 156

– Lightly oil sealing lip of valve stem seal.
– Slide valve stem oil seal onto plastic sleeve.
– Carefully press valve stem oil seal onto valve guide using valve stem seal fitting - 3365- tool.
– Take out plastic sleeve.
– Position the valve spring and the valve spring plate.
– Set up removal and installation device for valve cotters - VAS 5161- as shown.

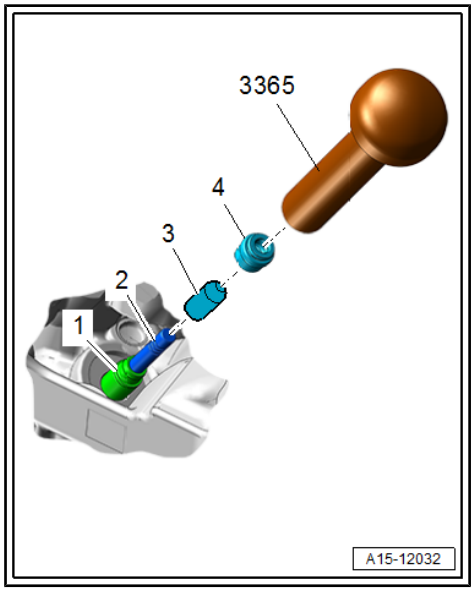

Intake side

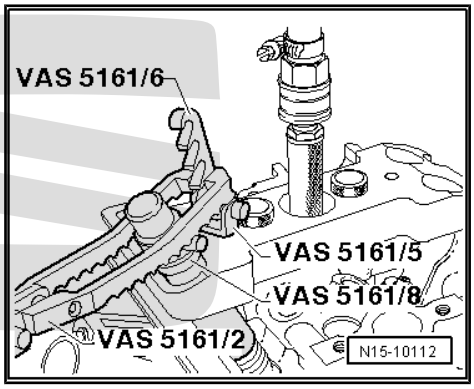

Exhaust side

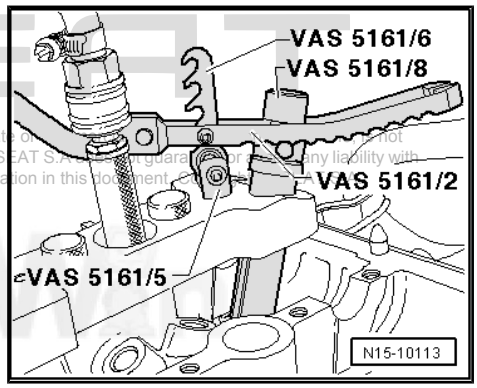

Note

- *If the valve cones were extracted from the assembly cartridge, they must be placed on the base - VAS 5161/18- .*
- *Press assembly cartridge -VAS 5161/8- onto insertion device from above and pick up valve cotters.*

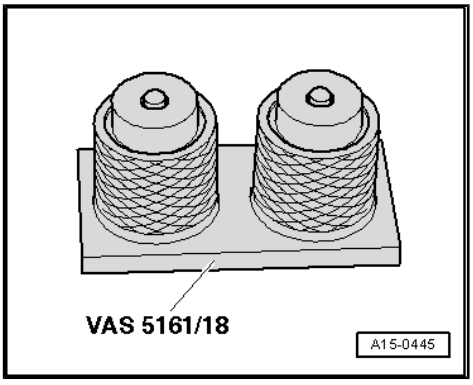

– Use pressure fork - VAS 5161/8- to press down assembly cartridge - VAS 5161/2- , then turn knurled screw of assembly cartridge back and forth while pulling upwards.

– Release pressure fork - VAS 5161/2- with knurled screw in pulled position.

– Detach removal and installation device - VAS 5161- .

The remaining installation steps are carried out in the reverse sequence. Note the following points:

– Install camshafts ⇒ page 158 .

4.7.2 Removing and installing valve stem oil seals (cylinder head removed)

Special tools and workshop equipment required

- Valve stem seal puller - 3364-

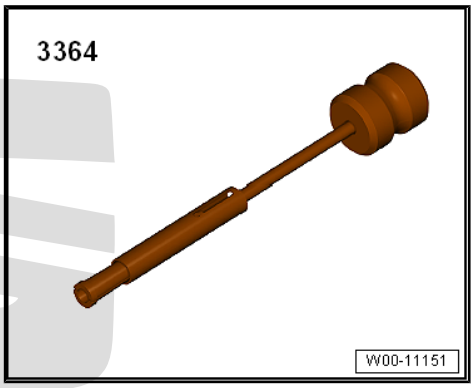

- Valve stem seal fitting tool - 3365-

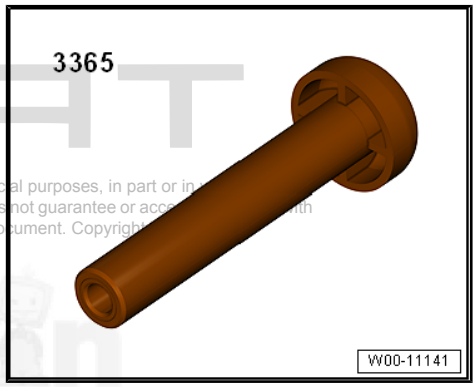

- Mounting and dismounting element for valve cotters - VAS 5161 A-

- Guide plate for 2.0 ltr. and 3.0 ltr. FSI engine - VAS 5161/19C-
- Engine and gearbox support - VAS 6095A-

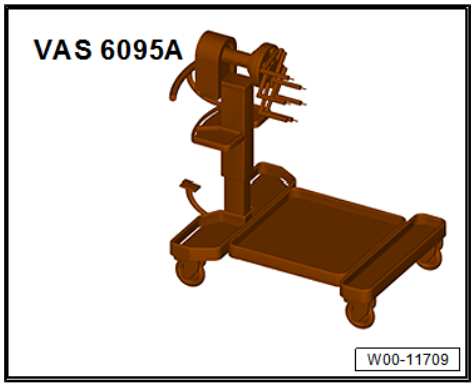

- Cylinder head tensioning device - VAS 6419-

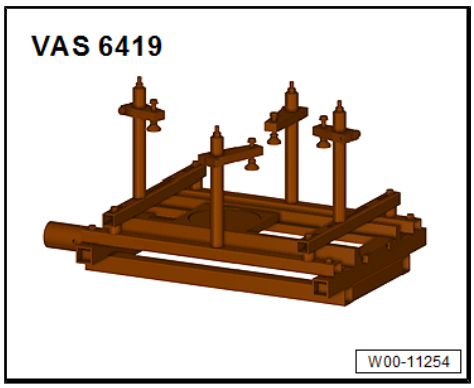

- Assembly sleeve ⇒ Electronic parts catalogue

Removing valve stem oil seals

– Remove camshafts ⇒ page 158 .

– Mark original positions of roller rocker fingers and hydraulic compensation elements for re-installation.

– Remove roller rocker fingers together with hydraulic compensation elements and place down on a clean surface.

– Insert cylinder head tensioning device - VAS 6419- into engine and gearbox support - VAS 6095- .
– Secure cylinder head in cylinder head tensioning device, as shown in illustration.
– Connect cylinder head tensioning device to compressed air.
– Using lever -arrow-, slide air pad under combustion chamber where valve stem oil seal to be removed.
– Apply just enough compressed air to bring air pad into contact with valve heads.

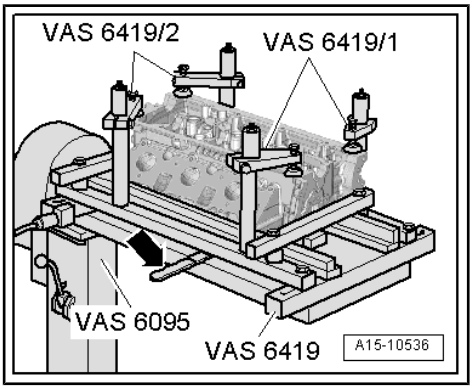

Reworking guide plate

Check if recess -arrow- is present.

– If necessary, rework guide plate - VAS 5161/19C- -arrow-, until it rests against cylinder head and guide plate -1- is free.

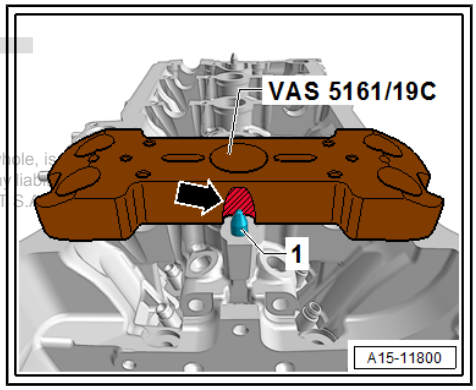

– Screw guide plate - VAS 5161/19C- to cylinder head, as shown in illustration, using knurled screws - VAS 5161/12- .
– Insert drift -VAS 5161/3- into guide plate and use plastic-headed hammer to release sticking valve cotters.

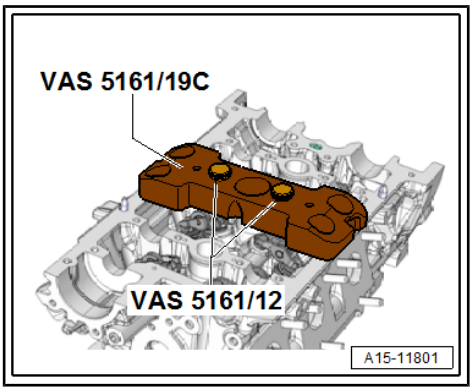

For inlet side

– Screw retainer - VAS 5161/6- with guide fork - VAS 5161/5- into centre thread of guide plate - VAS 5161/19C- .
– Insert the assembly cartridge - VAS 5161/8- in the guide plate - VAS 5161/19C- .
– Attach pressure fork - VAS 5161/2- to ratchet piece - VAS 5161/6- .

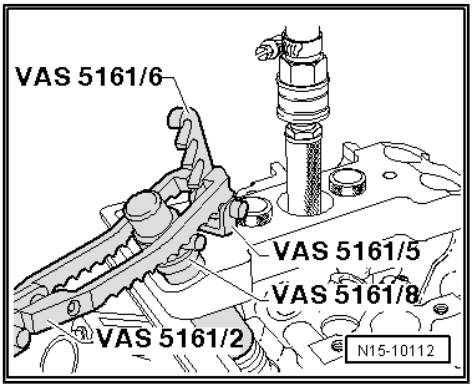

For exhaust side

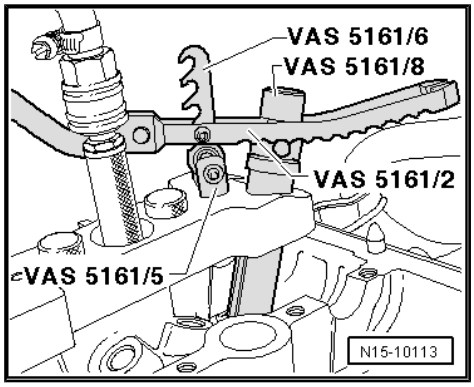

- Screw retainer - VAS 5161/6- with guide fork - VAS 5161/5- into outer thread of guide plate - VAS 5161/19C- .
- Press down assembly cartridge - VAS 5161/8- and at the same time, turn knurled screw of assembly cartridge - VAS 5161/8- clockwise until tips engage in valve cotters.
- Move knurled screw back and forth slightly. This causes the valve cotters to be pressed apart and taken into the assembly cartridge.
- Release pressure fork - VAS 5161/2- .
- Take out assembly cartridge - VAS 5161/8- .

- Pull off valve stem seals using valve stem seal puller - 3364- .

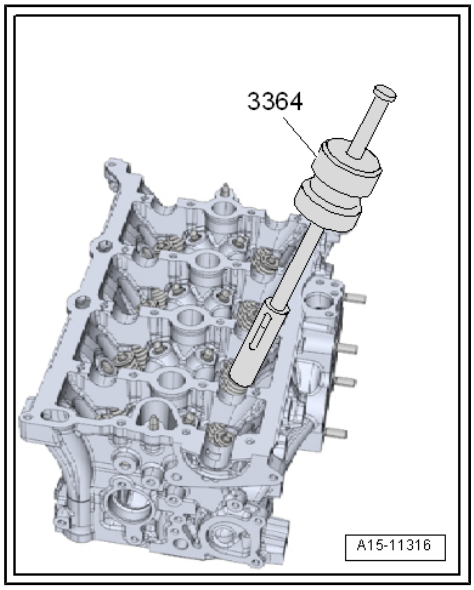

Installing valve stem seals

- To ensure the new valve stem seal -4- is not damaged during installation, the plastic sleeve -3- must be mounted on the valve stem -2-.
- Distinguishing between valve stem oil seals ⇒ page 156

- Lightly oil sealing lip of valve stem seal.
- Slide valve stem oil seal onto plastic sleeve.
- Carefully press valve stem oil seal onto valve guide using valve stem seal fitting - 3365- tool.
- Take out plastic sleeve.
- Position the valve spring and the valve spring plate.
- Set up removal and installation device for valve cotters - VAS 5161- as shown.

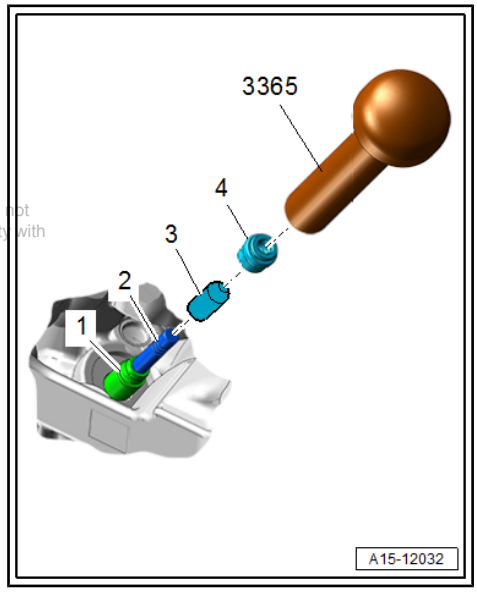

Intake side

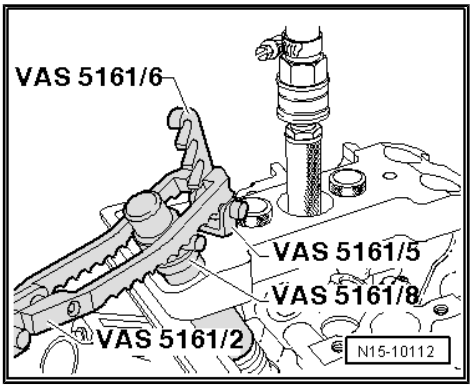

Exhaust side

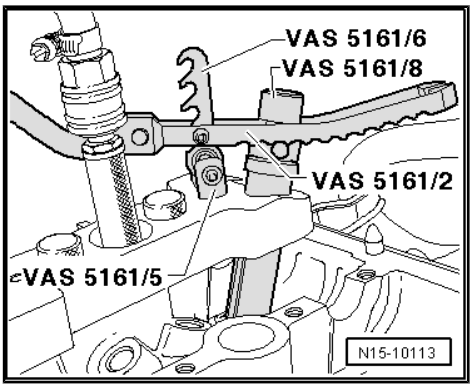

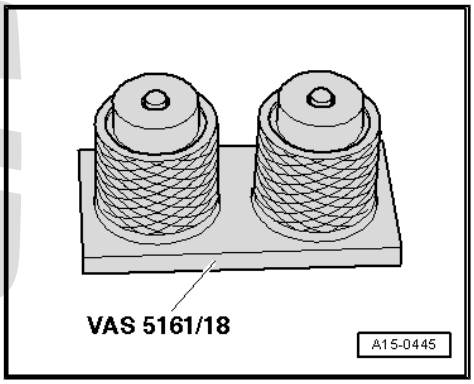

Note

- *If the valve cones were extracted from the assembly cartridge, they must be placed on the base - VAS 5161/18- .*
- *Press assembly cartridge -VAS 5161/8- onto insertion device from above and pick up valve cotters.*

– Use pressure fork - VAS 5161/8- to press down assembly cartridge - VAS 5161/2- , then turn knurled screw of assembly cartridge back and forth while pulling upwards.

– Release pressure fork - VAS 5161/2- with knurled screw in pulled position.

– Detach removal and installation device for valve cotters - VAS 5161- .

Further assembly is basically the reverse of the dismantling sequence. In the process, note the following:

– Install camshafts ⇒ page 158 .

5 Inlet and exhaust valves

⇒ “5.1 Valve guides: verification”, page 198
⇒ “5.2 Valves: checking”, page 199
⇒ “5.3 Valve dimensions”, page 199

5.1 Valve guides: verification

Special tools and workshop equipment required

- Universal dial gauge bracket - VW 387-

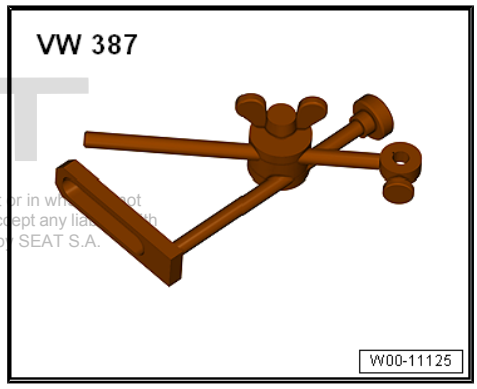

- Dial gauge - VAS 6079-

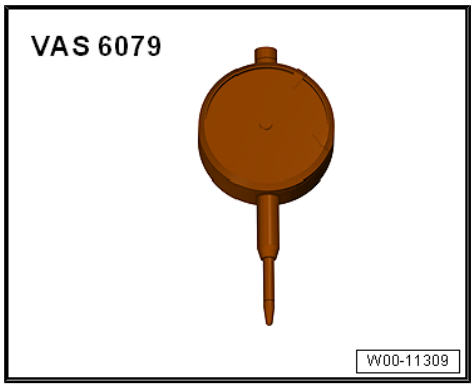

Development

– Insert valve into valve guide. The end of the valve stem should be flush with the guide. The diameter of the valve stems varies: the inlet valves only fit the inlet guides and the outlet valves only fit the outlet guides.

– Determine rock.

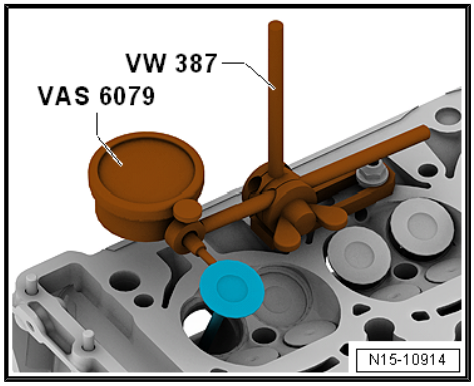

Wear limit

Inlet valve guide	Exhaust valve guide
0.80 mm	0.80 mm

Note

- *If the wear limit is exceeded, redo the measurement using new valves. If the wear limit is still exceeded, replace the cylinder head*
- *If the valve is to be renewed as part of a repair, use a new valve for the calculation.*

5.2 Valves: checking

– Visually inspect for scoring on valve stems and valve seat surfaces.

– Renew valve if scoring is clearly visible.

5.3 Valve dimensions

Note

Inlet and exhaust valves must not be reworked. Only grinding-in is permitted.

Measurement		Inlet valve	Exhaust valve
∅ a	mm	33.85 ± 0.10	28.0 ± 0.1
∅ b	mm	5.98 ± 0.01	5.96 ± 0.01
c	mm	104.0 ± 0.2	101.9 ± 0.2
α	∠°	45	45

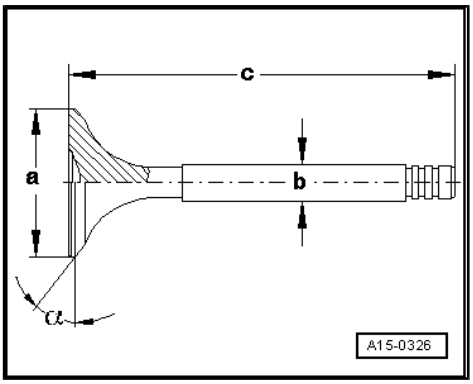

17 – Lubrication

1 Sump, oil pump

1.1 Exploded view - sump/oil pump

Note

If large quantities of swarf or metal particles (caused, for example, by partial seizure of the crankshaft or conrod bearings) are found in the engine oil when performing repairs, thoroughly clean the oil passages, and renew the engine oil cooler in order to prevent subsequent damage.

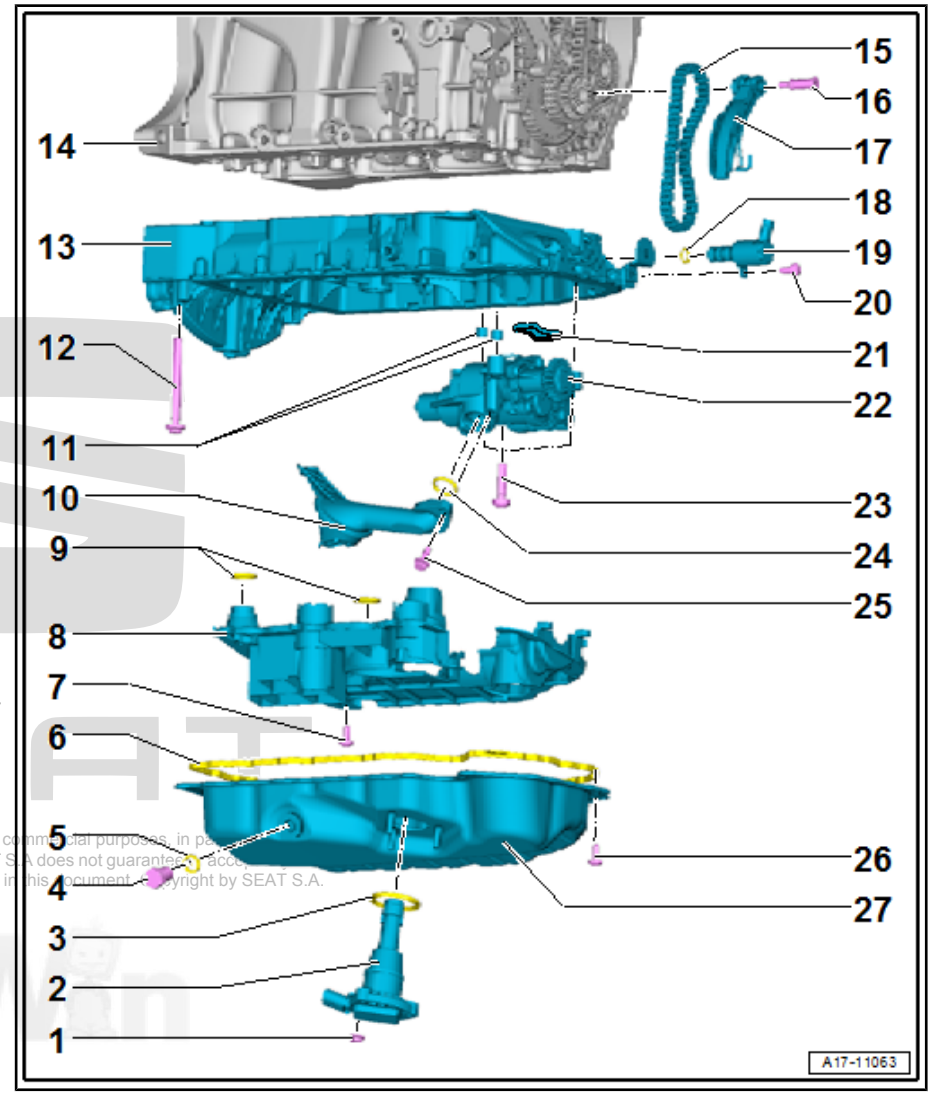

1 - Nut

- ❑ 9 Nm

2 - Oil level/oil temperature sensor - G266-

- ❑ Removing and fitting ⇒ page 215

3 - O ring

- ❑ Lubricate lightly with engine oil
- ❑ Must be renewed if removed

4 - Oil drain plug/sealing plug

- ❑ Sheet-metal sump: 30 Nm
- ❑ Turn the plastic sump using the assembly tool - T10549- until the end

5 - Seal / O-ring

- ❑ Renew seal after each removal.
- ❑ Renew O-ring in case of leaks.

6 - Gasket/sealant

- ❑ ⇒ Electronic parts catalogue (ETKA)

7 - Bolt

- ❑ For baffle plate and oil suction pipe
- ❑ Renew after removing
- ❑ 4 Nm + turn +45° further

8 - Anti-surge valve

- ❑ Renew after removing

9 - O-ring

- ❑ Renew after removing
- ❑ Lubricate lightly with engine oil

10 - Oil suction pipe

- ❑ Clean strainer if soiled.

11 - Centring sleeve

12 - Bolt

- ❑ Renew after removing
- ❑ Tightening sequence ⇒ Item 13 (page 201)

13 - Oil sump - upper part

- ❑ Removing and fitting ⇒ page 208
- ❑ Oil sump upper part with 18 bolts – tightening sequence ⇒ page 203
- ❑ Oil sump upper part with 14 bolts - tightening sequence
- ❑ If the top section of sump is renewed, the baffle plate must be renewed as well.

14 - Cylinder block

15 - Drive chain for oil pump

- ❑ Mark direction of rotation before removing

16 - Bolt

- ❑ 9 Nm

17 - Chain tensioner

18 - O-ring

- ❑ Always renew after removing
- ❑ Lubricate lightly with engine oil

19 - Valve for oil pressure control - N428-

- ❑ Removing and fitting ⇒ page 231

20 - Bolt

- ❑ Tightening torque ⇒ Item 1 (page 222)

21 - Oil strainer

22 - Oil pump

- ❑ Removing and fitting ⇒ page 213

23 - Bolt for oil pump

- ❑ Must be renewed if removed
- ❑ 8 Nm +90°

24 - O-ring

- ❑ Always renew after removing
- ❑ Lubricate lightly with engine oil

25 - Bolt for oil suction pipe

- ❑ Must be renewed if removed
- ❑ 4 Nm +45°

26 - Bolt for sump

- ❑ Must be renewed if removed
- ❑ Tightening sequence ⇒ page 203

27 - for oil sump - lower part

- ❑ Tightening sequence ⇒ page 204
- ❑ Sheet-metal or plastic
- ❑ Removing and fitting ⇒ page 203

Oil sump upper part 14 bolts - torque and tightening sequence

- Renew bolts after removing.
- Always use 14 bolts.

– Tighten bolts in stages in the sequence shown.

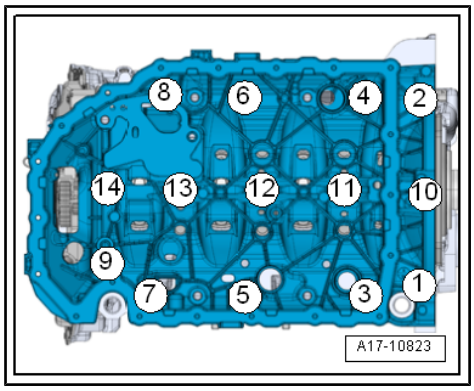

stage	Bolts	Specified torques/turning further angle
1.	-1 … 14-	8 Nm
2.	-1, 2-	Turn 180° further
3.	-3 … 9-	Turn 45° further
4th	-10-	Turn 180° further
5th	-11 … 14-	Turn 90° further

Oil sump upper part 18 bolts - torque and tightening sequence

- Renew bolts after removing.
- Always use 18 bolts.

– Tighten bolts in stages in the sequence shown.

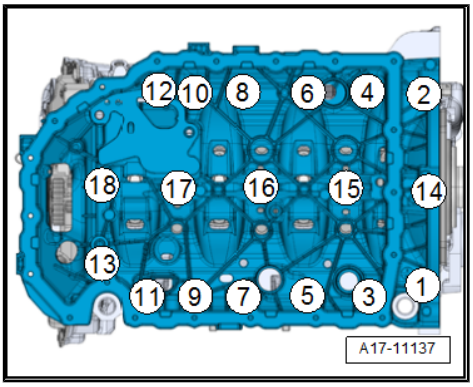

stage	Bolts	Specified torques/turning further angle
1.	-1 … 18-	8 Nm
2.	-1, 2-	Turn 180° further
3.	-3 … 13-	Turn 45° further
4th	-14 … 18-	Turn 90° further

1.2 Engine oil

Oil capacity:

⇒ Maintenance ; Booklet 501 ; Fill quantities for engine oil .

The oil capacity was determined experimentally. Due to tolerances, the oil temperature and the drip time, the actual oil capacity may differ. The oil capacity also depends on the type of repair work which has been performed. The correct oil level is indicated by the marking on the dipstick.

Engine oil specifications⇒ Maintenance ; Booklet 501 ; Engine oil standards .

Oil change ⇒ Maintenance ; Booklet 501 ; Changing engine oil and oil filter .

Check engine oil level ⇒ Maintenance ; Booklet 501 ; Engine oil level: check .

1.3 Removing and installing sump (bottom section)

⇒ "1.3.1 Removing and installing bottom section of sump, plastic sump", page 203

⇒ "1.3.2 Removing and installing bottom section of sump, sheet-metal sump", page 205

1.3.1 Removing and installing bottom section of sump, plastic sump

Special tools and workshop equipment required

♦ Used oil collection and extraction unit - VAS 6622A-

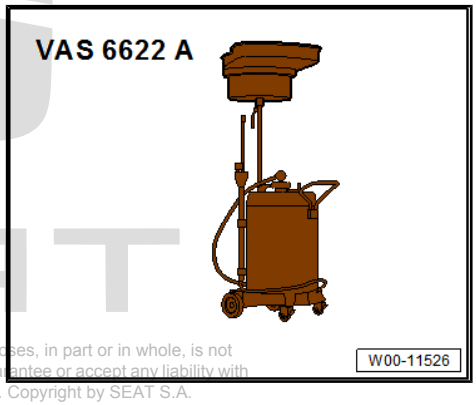

♦ Assembly tool - T10549-

Removing

– Remove noise insulation ⇒ General body repairs, exterior; Rep. gr. 66 ; Noise insulation; Assembly overview - noise insulation .

– Place the used oil collection and extraction unit - VAS 6622A- underneath the engine and allow the oil to drain.

Note

Please observe requirements for disposal.

– Unscrew bolts -1 … 20-, and remove sump.

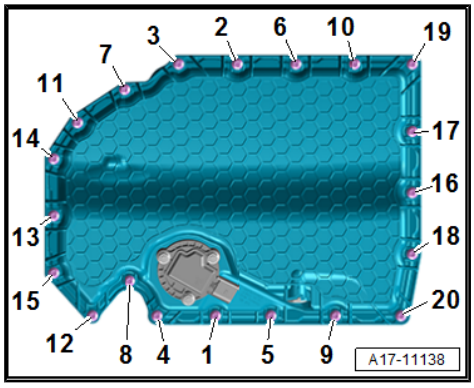

Fitting

– Install baffle plate, tightening torque ⇒ Item 7 (page 201)

– Tighten new bolts -1- to -20- in three stages in the sequence shown:

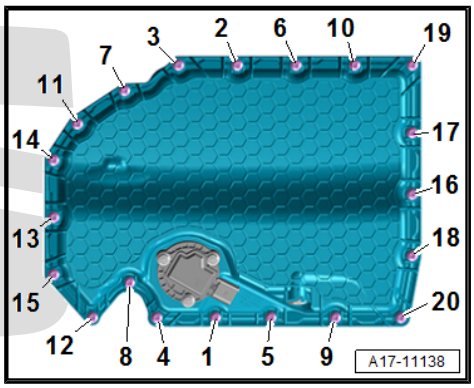

Stage	Tightening sequence and tightening torque
1. Bolts -1- to -20-	Screw in by hand as far as stop
2. Bolts -1- to -20-	Tighten to 8 Nm
3. Bolts -1- to -20-	Turn 90° further

– Replenish engine oil and check oil level ⇒ Maintenance ; Booklet 501 ; Engine oil: Draining; Renewing oil filter and replenishing engine oil .

Specified torques

♦ ⇒ “1.1 Exploded view - sump/oil pump”, page 200

1.3.2 Removing and installing bottom section of sump, sheet-metal sump

Special tools and workshop equipment required

- Wedge - T10383/2-

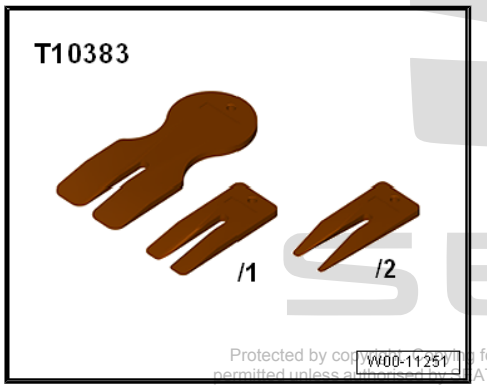

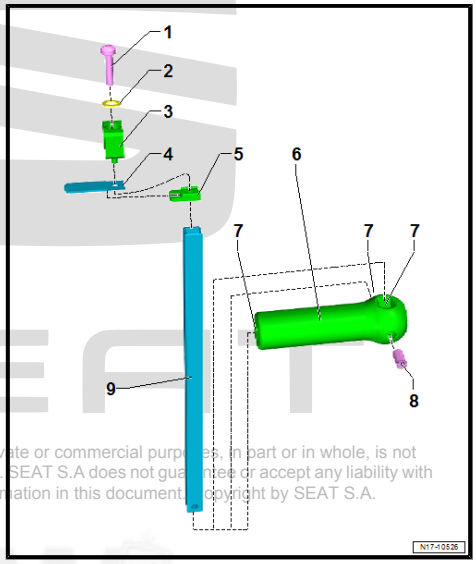

- Separating tool - T10561-

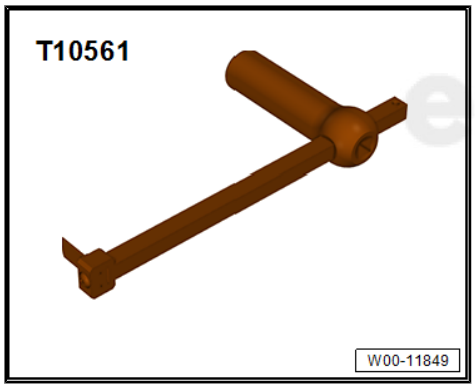

- Applicator gun - VAS 6966-

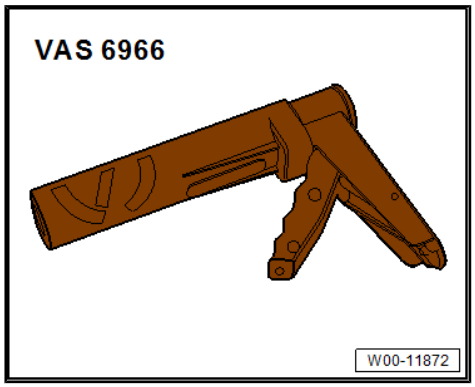

- Used oil collection and extraction unit - VAS 6622A-

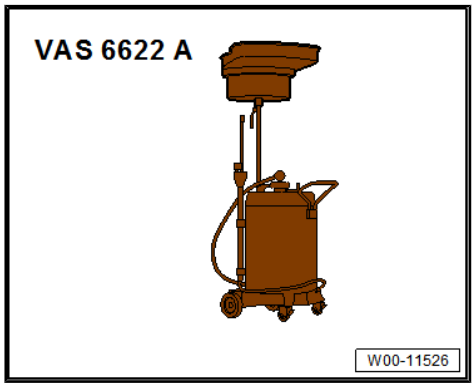

- Commercially available scraper.
- Electric drill with plastic brush
- Protective glasses
- Silicone sealant ⇒ Electronic Parts Catalogue (ETKA) .

Components of the separating tool - T10561-

1 - Bolt

2 - Flat washer

3 - Support plate

4 - Blade

5 - Guide piece

6 - Grip

7 - Inserts for support (rod) for conversion of handle

8 - Bolt

9 - Measuring tool

Removing

– Remove noise insulation ⇒ General body repairs, exterior; Rep. gr. 66 ; Noise insulation; Assembly overview - noise insulation .

– Place used oil collection and extraction unit - VAS 6622A- under engine and drain engine oil.

– Unscrew all but 2 fixing screws of the oil sump.

– Loosen 2 bolts on oil sump, but do not unscrew completely.

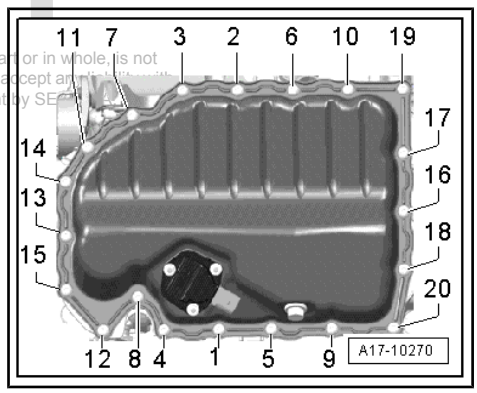

– Cut through seal between oil sump -4- and engine -1-.
– Use cutting tool - T10561- to do this.

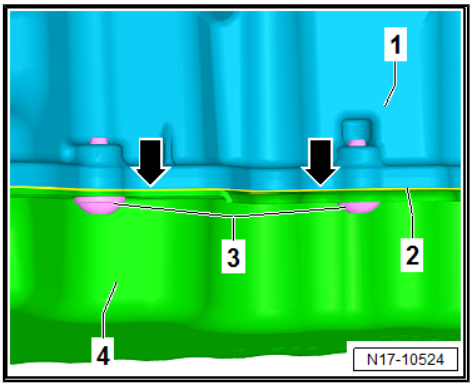

Note

- *The sump is sealed with liquid sealant -2- ⇒ Electronic Parts Catalogue .*
- *When hardened, the sealant has a high adhesive strength.*

– Separation is made centrally between bolts -3-.
– Position cutting tool - T10561- on seal -arrows- without it canting.

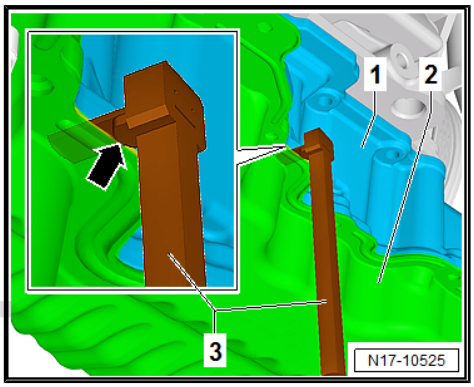

– Drive in cutting tool - T10561- -3- using a hammer as far as it will go -arrow-.
– Do not cant cutting tool - T10561- when doing this.
– Do not cutting tool - T10561- sideways.
– Do not lever with cutting tool - T10561- .
– Carry out the procedure at various points, until the oil sump has been loosened.
– Use wedge - T10383/2- to further loosen detached positions.
– Using a plastic hammer carefully drive in wedge.
– Drive in wedge - T10383/2- only to same depth as sealing surface.
– Carefully release sump (bottom section) from bonded joint.
– Fit wedge - T10383/2- at another position and detach the bonded joint in the same way.
– Carefully detach lower part of sump from adhesive bond using a commercially available scraper.

Fitting

CAUTION

Risk of eye injury caused by sealant residue.
– **Wear safety goggles.**

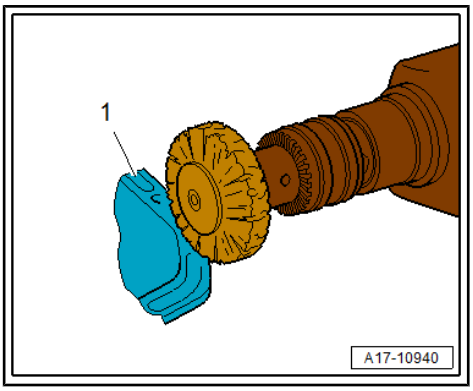

– Remove any remaining sealant on the sealing surfaces, using a plastic rotary brush for example.
– Clean sealing surfaces; they must be oil and grease free.

– Apply the bead of silicone sealant onto the clean sealing surface of the sump (bottom section), as illustrated.

♦ Thickness of sealant bead: 2 to 3 mm

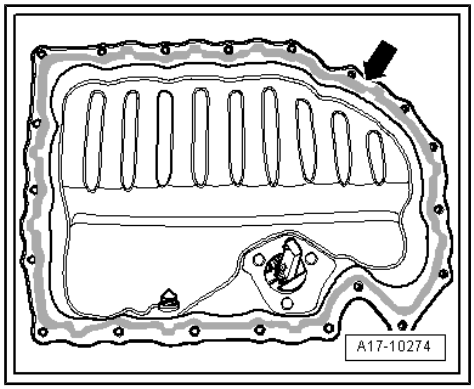

Note

♦ *The line of sealant must not be thicker than prescribed, as otherwise excessive sealant will enter the sump and obstruct the strainer in the oil intake pipe.*

♦ *The oil pan must be installed within 5 minutes after applying the silicone sealant.*

♦ *After fitting sump, allow the sealant to dry for approx. 30 minutes. Then (and only then) fill the engine with engine oil.*

– Tighten new bolts -1- to -20- in two stages in the sequence shown:

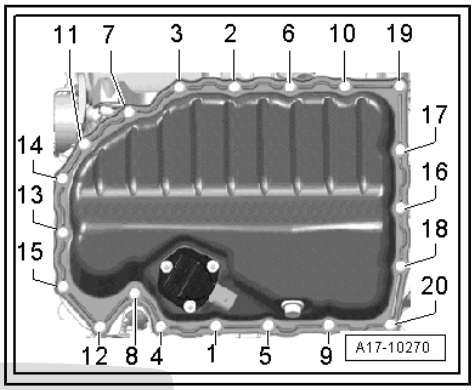

Stage	Tightening sequence and tightening torque
1. Bolts -1- to -20-	Tighten to 8 Nm
2. Bolts -1- to -20-	Turn 45° further

– Replenish engine oil and check oil level ⇒ Maintenance ; Booklet 501 ; Engine oil: Draining; Renewing oil filter and replenishing engine oil .

Specified torques

♦ ⇒ “1.1 Exploded view - sump/oil pump”, page 200

1.4 Removing and installing sump (top section)

Special tools and workshop equipment required

♦ Assembly tool - T10118-

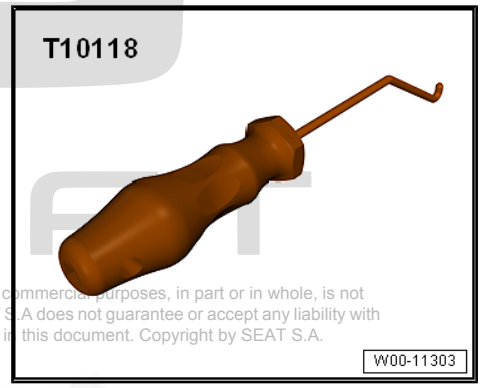

- Dowel pin - T40265-

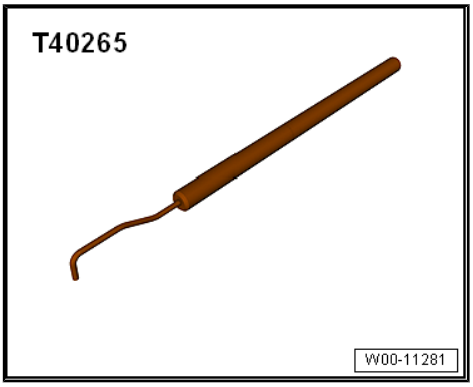

- Electric drill with plastic brush
- Protective glasses
- Silicone sealant ⇒ Electronic Parts Catalogue (ETKA) .

Removing

- Gearbox removed.

– Remove sump (bottom section) ⇒ page 203 .

– Remove rear sealing flange ⇒ page 75 .

– Remove oil pump ⇒ page 213 .

Vehicles with windscreen washer tank, right side:

– Remove windscreen washer tank filler -2- ⇒ Electrical system; Rep. gr. 92 ; Windscreen washer system; Removing and installing tank for windscreen washer system .

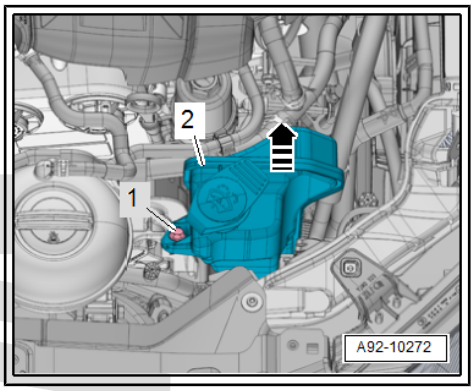

Continued for all vehicles

– Unplug electrical connector -1-.

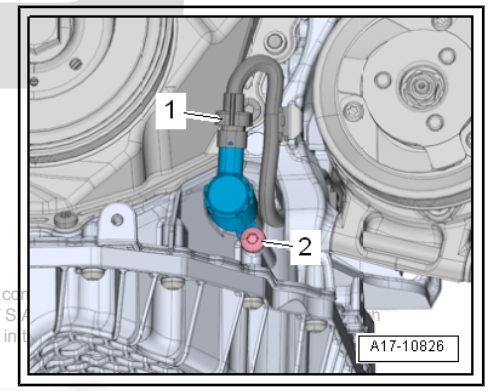

– Remove bolts -arrows-.

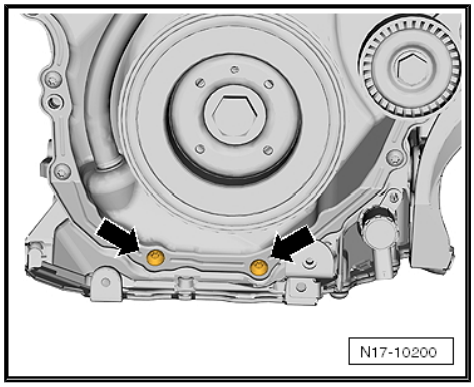

Top section of sump with 14 bolts

– Take out bolts -1 … 14- and loosen the oil sump upper part from the adhesive joint.

– Lever off upper part of sump on gearbox side first. Take care timing chain cover is not bent when levering off.

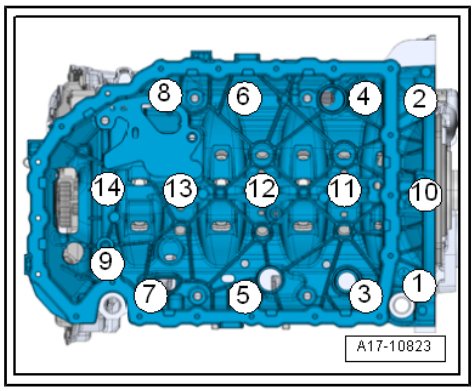

Top section of sump with 18 bolts

– Take out bolts -1 … 18- and loosen the oil sump upper part from the adhesive joint.

– Lever off sump (top section) at gearbox end first. Take care timing chain cover is not bent when levering off.

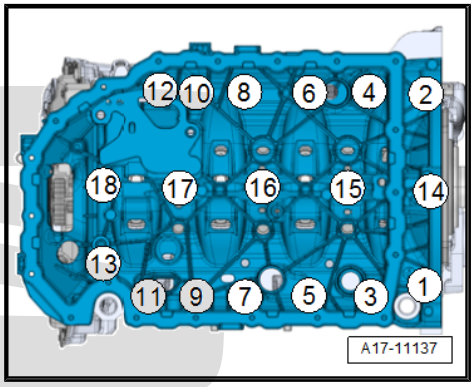

Fitting

♦ Silicone sealant: ⇒ Electronic Parts Catalogue (ETKA) .

Note

♦ *Observe use-by date of the silicone sealant.*

♦ *The sump (top section) must be installed within 5 minutes after applying the silicone sealant.*

♦ *Replace bolts that are tightened with specified tightening angle.*

♦ *Renew seals, gaskets and self-locking nuts.*

– Eliminate the sealant residue from cylinder block, using a flat rasp.

CAUTION

Risk of eye injury caused by sealant residue.

– **Wear safety goggles.**

– Remove sealant residue on sump (bottom section) using rotating plastic brush or similar.

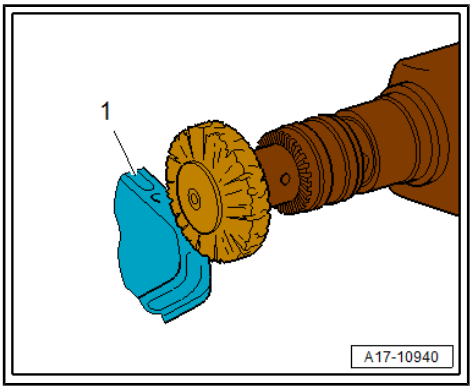

Note

Check timing chain cover for deformation. To do this, fit sump upper part first without sealant and check gap between cover and sump upper part. If deformation is evident and cover cannot be aligned, renew cover after upper part of sump has been installed.

– Clean sealing surfaces; they must be free of oil and grease.

– Check oil passages in sump (top section) and crankcase for contamination.

– Cut off nozzle of tube at front marking (nozzle ∅ approx. 2 mm).

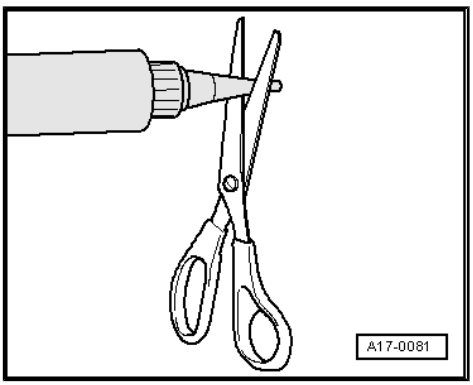

Note

Danger of blocking lubrication system with excess sealant. Do not apply sealant bead thicker than specified.

– Apply silicone sealant onto clean sealing surface of sump (top section) as illustrated -arrow-.

• Thickness of the sealing paste bead: 2...3 mm.

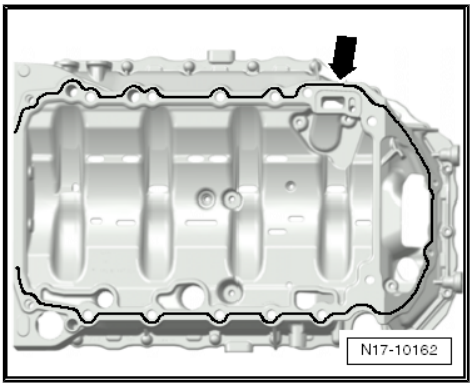

– Apply silicone sealant between cylinder block and lower timing chain cover, as shown in illustration -arrows-.

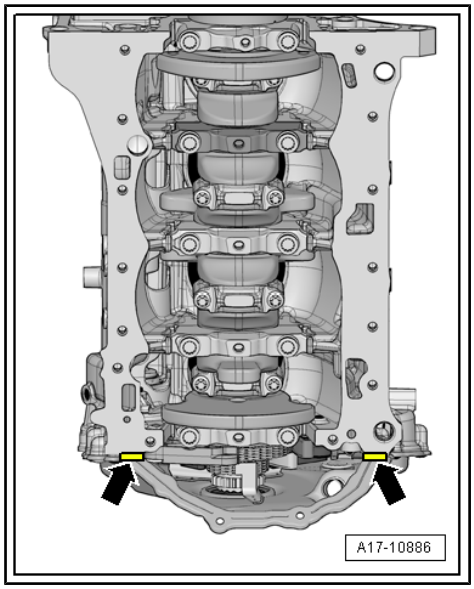

Note

- *The sump (top section) must be installed within 5 minutes after applying the silicone sealant.*
- *The line of sealant must not be thicker than prescribed, as otherwise excessive sealant will enter the sump and obstruct the strainer in the oil intake pipe.*

• Sump (top section) and crankcase must be flush at gearbox end.

– Immediately fit top section of sump, and turn in bolts as far as stop.

– Tighten oil sump upper part with 14 bolts. Specified torque ⇒ Fig. ""Oil sump upper part 14 bolts - torque and tightening sequence"" , page 202

– Tighten oil sump upper part with 18 bolts. Specified torque ⇒ Fig. ""Oil sump upper part 18 bolts - torque and tightening sequence"" , page 203

– Fit bolts -arrows-. Specified torque: 8 Nm + 45°

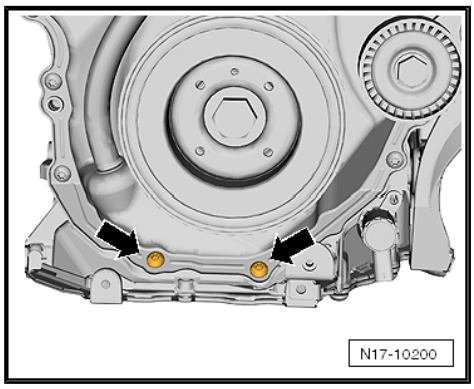

– Tighten new bolts -arrows-.

Component	Tightening torque
Bolts -arrows-	8 Nm +45°

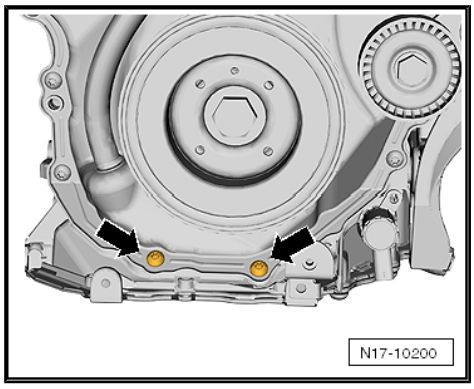

– Install rear sealing flange ⇒ page 75 .

– Fit the oil pump ⇒ page 213 .

– Fit new baffle plate and secure in position.

– Install sump (bottom section) ⇒ page 203 .

– Install windscreen washer tank ⇒ Electrical system; Rep. gr. 92 ; Windscreen washer system; Overview - windscreen washer system .

Further assembly is basically the reverse of the dismantling sequence.

– Replenish engine oil and check oil level ⇒ Maintenance ; Booklet 501 ; Engine oil: Draining; Renewing oil filter and replenishing engine oil .

Specified torques

- ⇒ "1.1 Exploded view - sump/oil pump", page 200

1.5 Oil pump: removing and installing

Special tools and workshop equipment required

- Assembly tool - T10118-

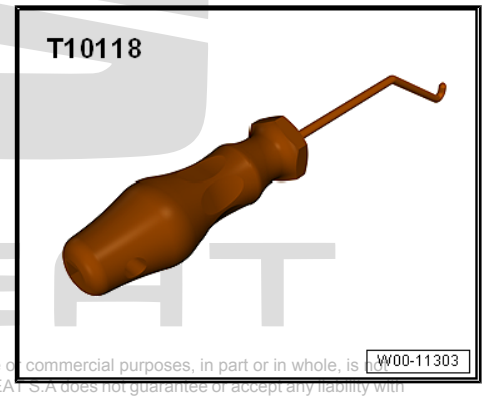

- Dowel pin - T40265-

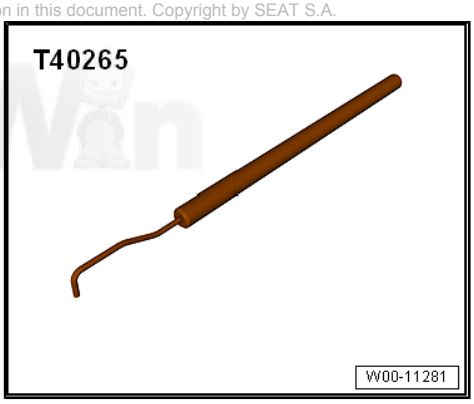

Removing

– Remove sump (bottom section) ⇒ page 203 .

– Unscrew bolt -1-, and remove baffle plate -2-.

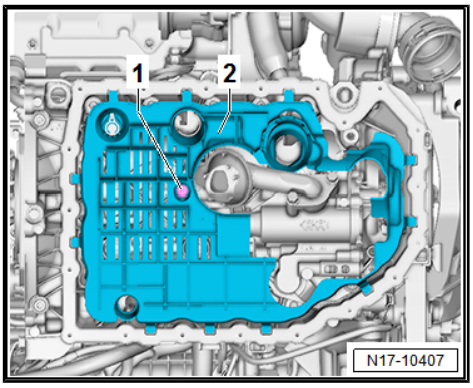

– Using assembly tool - T10118- , pull spring of chain tensioner in direction of -arrow- and secure with locking tool - T40265- .

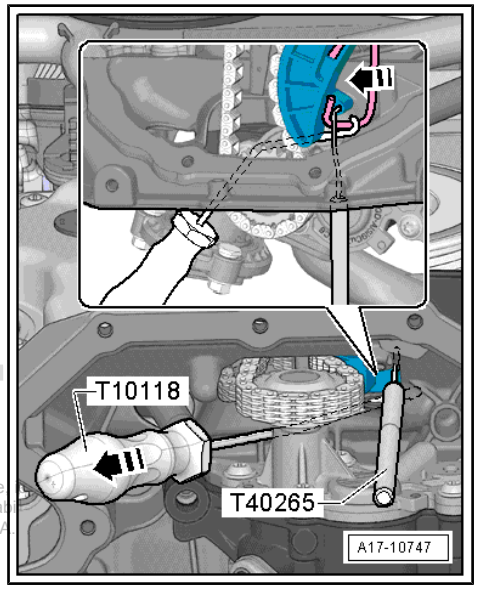

– Remove bolts -arrows- and detach oil pump.

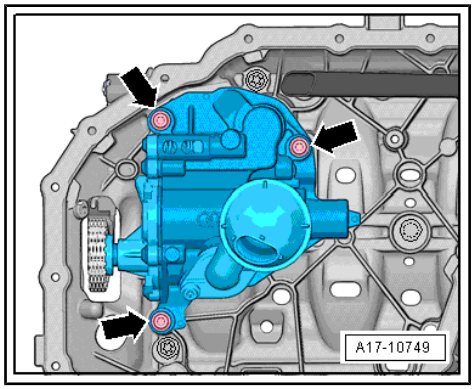

Fitting

Install in the reverse order of removal, observing the following:

– Check that both centring sleeves are fitted in oil pump.

– Before installing oil pump, check strainer in oil intake pipe and oil passages in sump (top section) for dirt.

– Guide oil pump sprocket into drive chain and install oil pump.

– Using assembly tool - T10118- , pull spring of chain tensioner in direction of -arrow- and remove locking tool - T40265- .

– Slowly relieve tension from assembly tool - T10118- .

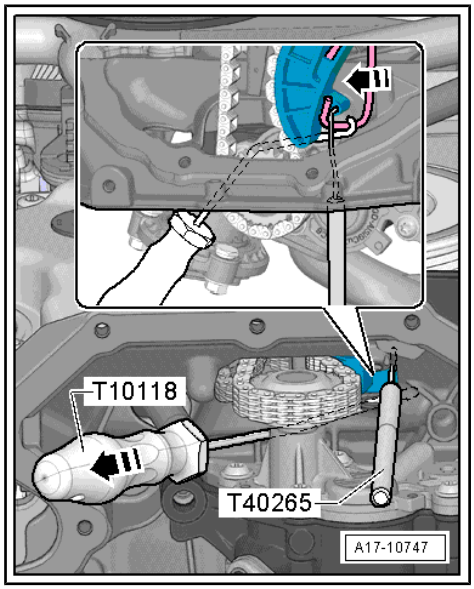

– Check position of retaining clip of chain tensioner.

• Retaining clip -2- must rest against protrusion -1- of top section of sump -arrow- as shown in illustration.

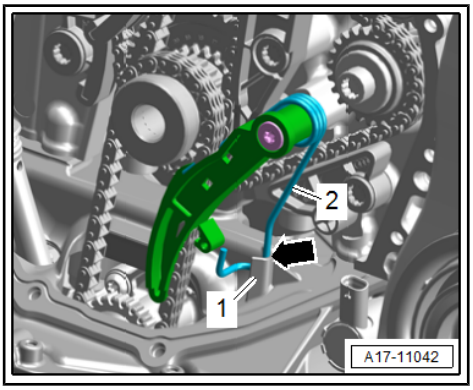

Note

To improve clarity, lower timing chain cover is not shown in illustration.

– Fit O-rings ⇒ Item 9 (page 201) onto baffle plate, and moisten them with engine oil.

– Insert new baffle plate, and bolt it on.

– Install sump (bottom section) ⇒ page 203 .

– Replenish engine oil, and check oil level ⇒ Maintenance ; Booklet 501 ; Engine oil: Draining; Renewing oil filter and replenishing engine oil .

Specified torques

◆ ⇒ “1.1 Exploded view - sump/oil pump”, page 200

1.6 Removing and installing oil level and oil temperature sender - G266-

Removing

• Engine oil drained ⇒ Maintenance ; Booklet 501

– Unplug electrical connector -2-.

– Unscrew nuts -3-, and remove oil level and oil temperature sender - G266- -1-.

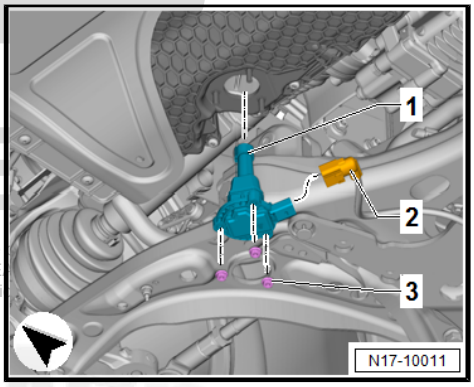

Fitting

Installation is carried out in the reverse order; note the following:

– Renew seal ring.

– Replenish engine oil and check oil level ⇒ Maintenance ; Booklet 501 ; Engine oil: Draining; Renewing oil filter and replenishing engine oil .

Specified torques

◆ ⇒ “1.1 Exploded view - sump/oil pump”, page 200

2 Engine oil radiator

⇒ “2.1 Assembly overview - engine oil cooler”, page 216

⇒ “2.2 Removing and installing engine oil cooler”, page 216

⇒ “2.3 Removing and installing mechanical switching valve”, page 218

2.1 Assembly overview - engine oil cooler

1 - Bracket for ancillary mechanical units

- ❑ Removing and fitting ⇒ page 67

2 - Gasket

- ❑ Renew

3 - O-rings

- ❑ Renew
- ❑ Lubricate lightly with engine oil

4 - Mechanical switching valve

- ❑ Renew

5 - Engine oil radiator

- ❑ See note ⇒ page 200 .
- ❑ Removing and fitting ⇒ page 216

6 - Seal

- ❑ Renew
- ❑ Lubricate with coolant

7 - Connecting piece

8 - Bolt

- ❑ Renew
- ❑ 8 Nm +45°

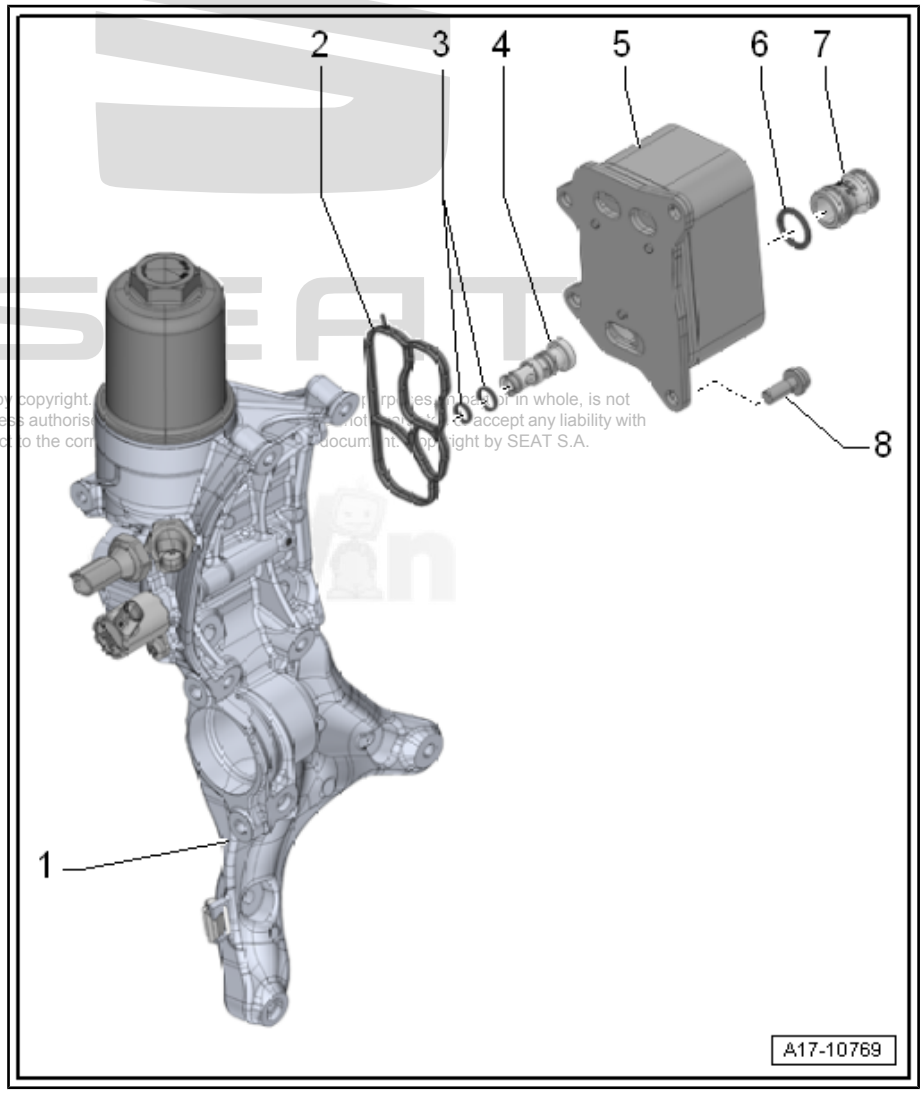

2.2 Removing and installing engine oil cooler

Special tools and workshop equipment required

- Drip tray for workshop hoist - VAS 6208-

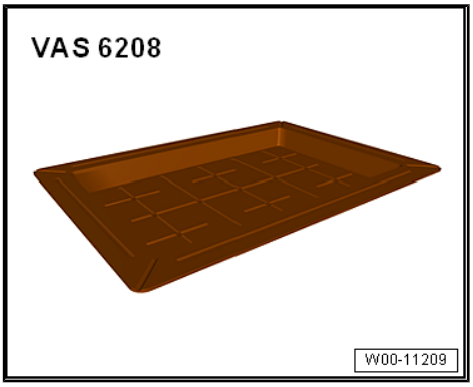

Removing

CAUTION

On a warm engine, the cooling system is under high pressure. Danger of scalding by steam and hot coolant.

Risk of scalding to skin and body parts.

- **Wear protection gloves.**
- **Wear safety goggles.**
- **Reduce excess pressure by covering cap of coolant expansion tank with cloths and opening it carefully.**

– Drain coolant ⇒ page 239 .

– Remove bracket for ancillaries ⇒ page 67 .

– Unscrew bolts -4 and 5- and remove engine oil cooler -3- together with seal -2-.

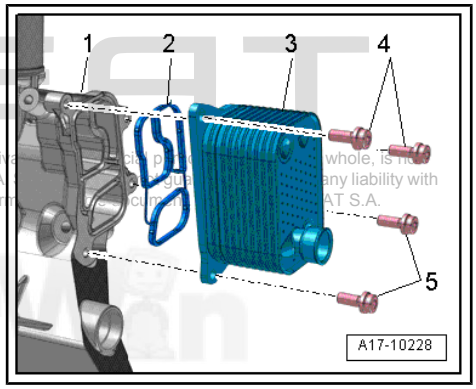

Fitting

Install in the reverse order of removal, observing the following:

Note

- *Renew gaskets and seals.*
- *Secure all hose connections with the correct type of hose clips (same as original equipment) ⇒ Electronic parts catalogue (ETKA) .*

– Install engine oil cooler -3- with new seal -2-.

– Install bracket for ancillaries ⇒ page 67 .

– Replenish coolant ⇒ page 240 .

– Replenish engine oil and check oil level ⇒ Maintenance ; Booklet 501 ; Engine oil: Draining; Renewing oil filter and replenishing engine oil .

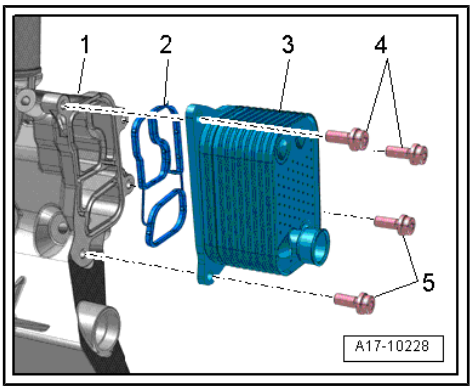

Specified torques

- ⇒ “2.1 Assembly overview - engine oil cooler”, page 216

2.3 Removing and installing mechanical switching valve

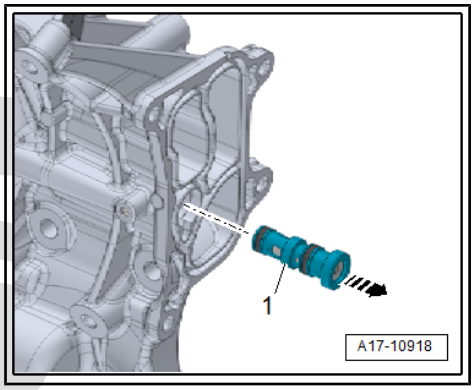

Removing

– Remove engine oil cooler ⇒ page 216 .

– Remove mechanical switching valve -1- from ancillary bracket -arrow-.

Fitting

Install in the reverse order of removal, observing the following:

Note

- *Renew gaskets and seals.*
- *Secure all hose connections with the correct type of hose clips (same as original equipment) ⇒ Electronic parts catalogue (ETKA) .*

– Moisten O-rings of mechanical switching valve with engine oil, and install switching valve.

– Install engine oil cooler ⇒ page 216 .

3 Crankcase breather system

⇒ "3.1 Exploded view - crankcase breather system", page 219

⇒ "3.2 Removing and installing the oil separator", page 220

3.1 Exploded view - crankcase breather system

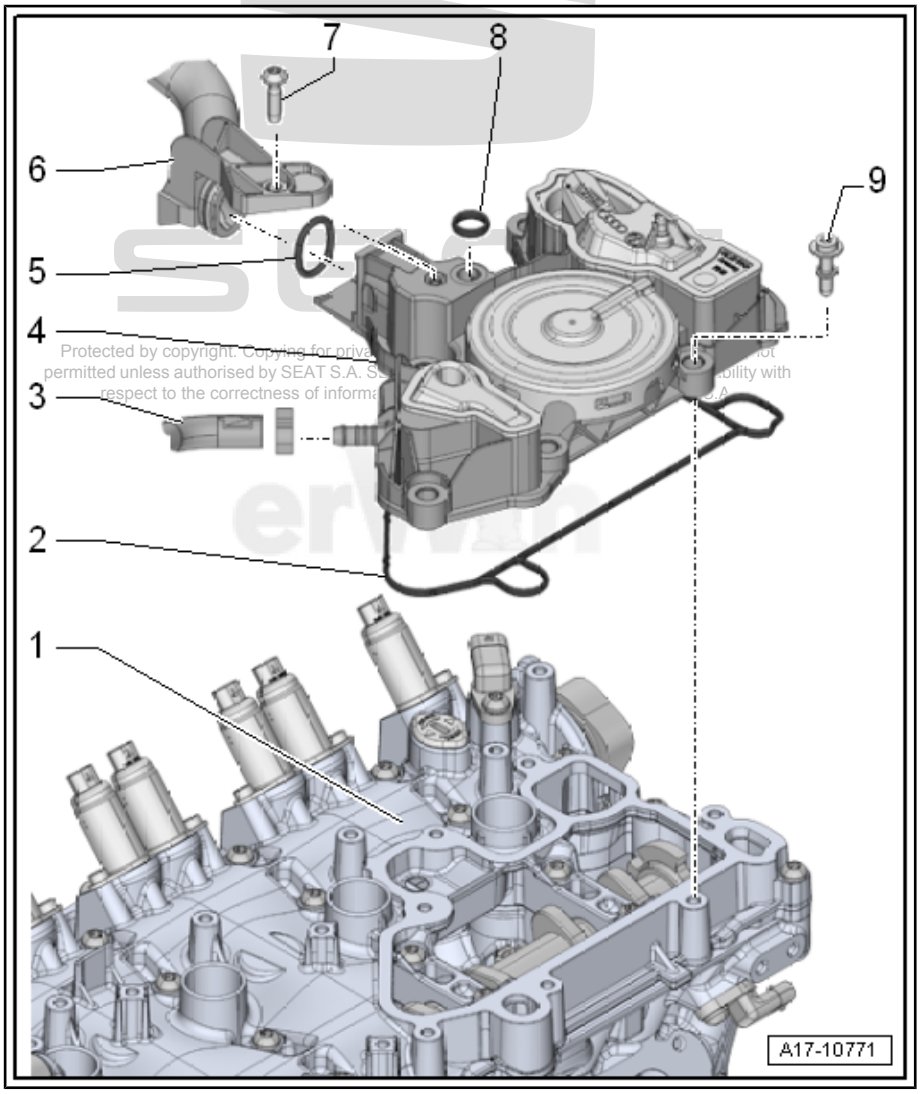

1 - Rocker finger cover

2 - Gasket

- ❑ Renew

3 - Hose

- ❑ to activated charcoal filter solenoid valve 1 - N80-

4 - Oil separator

- ❑ Removing and fitting ⇒ page 220

5 - Seal

- ❑ Renew

6 - Hose

- ❑ for crankcase breather
- ❑ to exhaust gas turbocharger

7 - Bolt

- ❑ Thread-forming
- ❑ Fit and screw in bolt by hand so that it is screwed into old thread. Then tighten bolt to torque.
- ❑ 4 Nm

8 - Seal

- ❑ Renew

9 - Bolt

- ❑ Thread-forming
- ❑ Fit and screw in bolt by hand so that it is screwed into old thread. Then tighten bolt to torque.
- ❑ Tightening torque and sequence ⇒ page 220

Tightening sequence - oil separator

– Tighten bolts to 9 Nm in sequence -1 ... 7-.

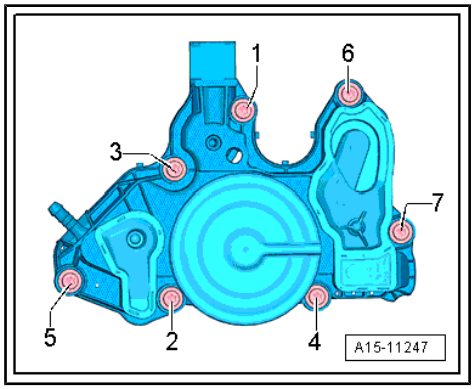

3.2 Removing and installing the oil separator

Removing

– Release electrical connectors at ignition coils and unplug from ignition coils simultaneously.

– Unscrew ignition coil bolts “3 and 4”, and pull out ignition coils.

– Release hose clip -1- and detach hose from activated charcoal filter solenoid valve 1 - N80- .

– Remove bolt -2- and detach crankcase breather hose -3- from oil separator.

– Remove bolts -arrows- and detach oil separator.

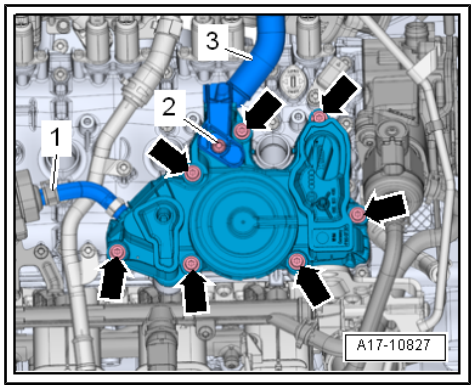

Fitting

Install in the reverse order of removal, observing the following:

Note

- *Renew gasket and seals.*
- *Secure all hose connections with the correct type of hose clips (same as original equipment) ⇒ Electronic parts catalogue (ETKA) .*

Specified torques

- ⇒ “3.1 Exploded view - crankcase breather system”, page 219

4 Oil filter/oil pressure switches

4.1 Exploded view - oil filter

1 - Bracket for ancillary mechanical units

- ❑ Removing and fitting ⇒ page 67

2 - Gasket

- ❑ Renew

3 - Oil filter

- ❑ Remove and install ⇒ Maintenance ; Booklet 501 .

4 - O-ring

- ❑ Renew
- ❑ Lubricate lightly with engine oil

5 - Oil filter housing:

- ❑ 25 Nm

6 - Oil drain connection

7 - O-rings

- ❑ Not available as replacement part, supplied together with ⇒ Item 6 (page 221)

8 - Bolt

- ❑ Tightening torque and sequence ⇒ page 59

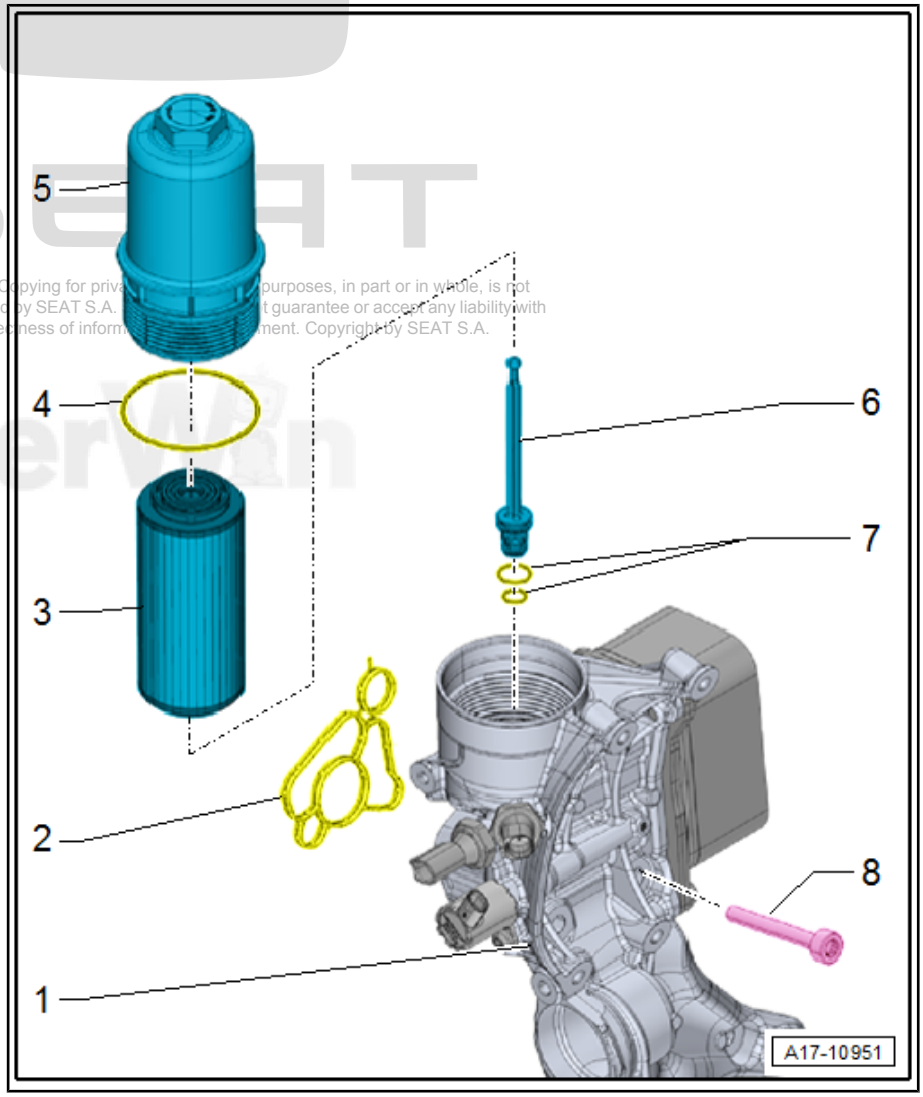

4.2 Exploded view - oil pressure switches/oil pressure control

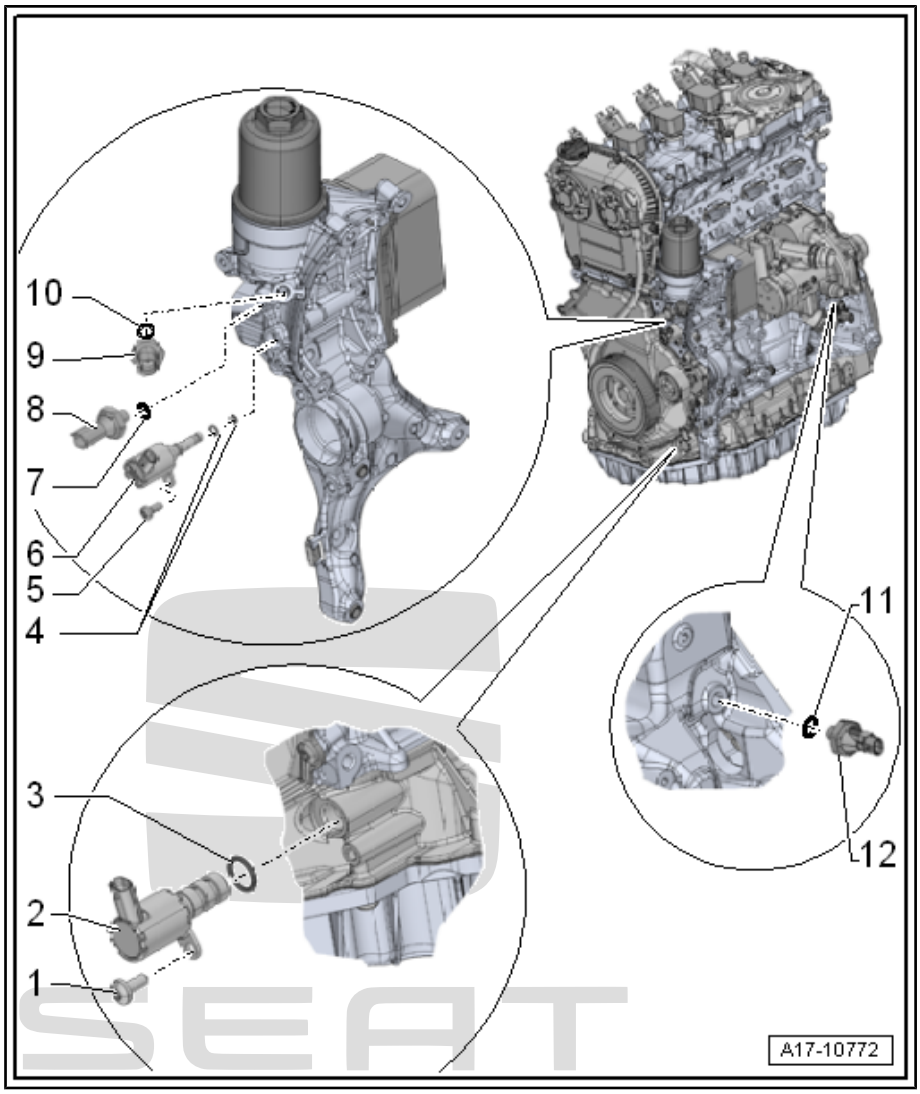

1 - Bolt
- ❑ Renew
- ❑ 4 Nm +90°

2 - Valve for oil pressure control - N428-
- ❑ Removing and fitting ⇒ page 231

3 - O-ring
- ❑ Renew
- ❑ Lubricate lightly with engine oil

4 - O-rings
- ❑ Renew
- ❑ Lubricate lightly with engine oil

5 - Bolt
- ❑ Renew
- ❑ 4 Nm +45°

6 - Piston cooling jet control valve - N522-
- ❑ Removing and fitting ⇒ page 223

7 - Seal
- ❑ Renew

8 - Oil pressure switch - F1-
- ❑ Blue or grey insulation
- ❑ Checking ⇒ Vehicle diagnostic tester
- ❑ Removing and fitting ⇒ page 224
- ❑ 20 Nm

9 - Oil pressure switch for reduced oil pressure - F378-
- ❑ Brown insulation
- ❑ Checking ⇒ Vehicle diagnostic tester
- ❑ Removing and fitting ⇒ page 225
- ❑ 20 Nm

10 - Seal
- ❑ Renew

11 - Seal
- ❑ Renew

12 - Stage 3 oil pressure switch - F447-
- ❑ Checking ⇒ Vehicle diagnostic tester
- ❑ Removing and fitting ⇒ page 226
- ❑ Installation position ⇒ page 223 .
- ❑ 20 Nm

Installation position stage 3 oil pressure switch - F447-

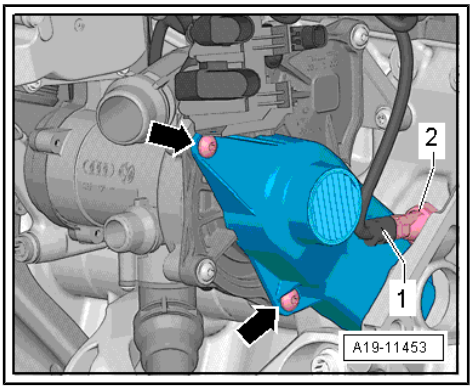

4.3 Removing and installing piston cooling jet control valve - N522-

Removing

Vehicles with windscreen washer tank, right side:

– Remove windscreen washer tank filler -2- ⇒ Electrical system; Rep. gr. 92 ; Windscreen washer system; Removing and installing tank for windscreen washer system .

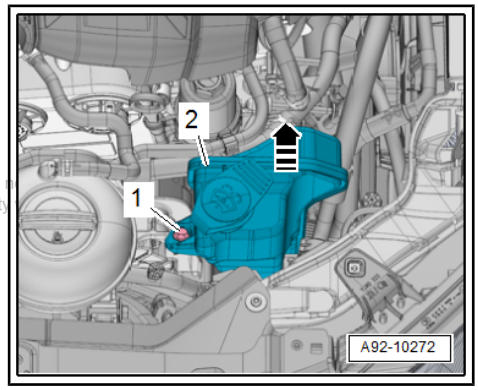

Continued for all vehicles

Note

Place a cloth underneath bracket for ancillaries to catch any escaping engine oil.

– Unscrew bolt -1- and remove piston cooling jet control valve - N522- -2-.

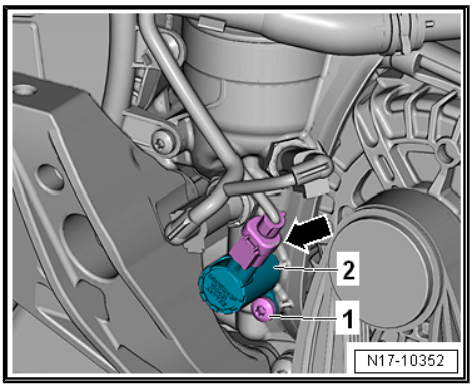

Fitting

Install in the reverse order of removal, observing the following:

Note

- *Replace the O-rings.*
- *Insert piston cooling jet control valves - N522- immediately in hole to avoid loss of oil.*

– check oil level⇒ Maintenance ; Booklet 501 .

Specified torques

- ⇒ “4.2 Exploded view - oil pressure switches/oil pressure control”, page 222

4.4 Removing and installing oil pressure switch - F1-

Special tools and workshop equipment required

- 24 mm jointed spanner - T40175-

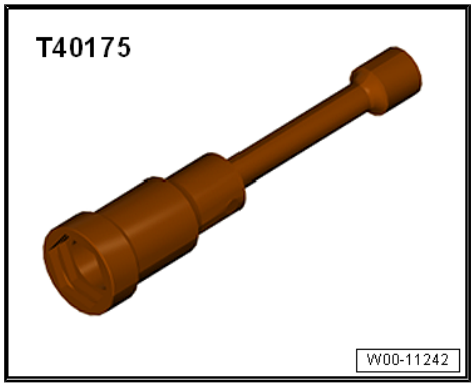

Removing

Vehicles with windscreen washer tank, right side:

– Remove windscreen washer tank filler -2- ⇒ Electrical system; Rep. gr. 92 ; Windscreen washer system; Removing and installing tank for windscreen washer system .

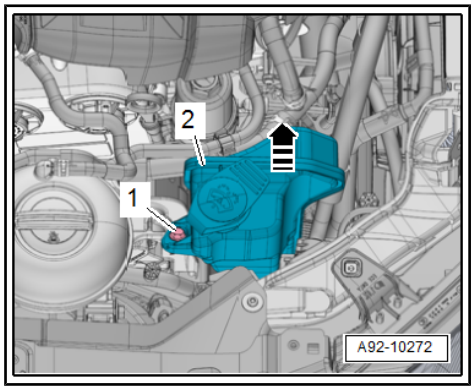

Continued for all vehicles

Note

- *Place a cloth underneath bracket for ancillaries to catch any escaping engine oil.*
- *Renew the seal each time the oil pressure switch has been loosened.*

– Detach electrical connector -arrow- from oil pressure switch -F1- .

– Remove oil pressure switch -1-.

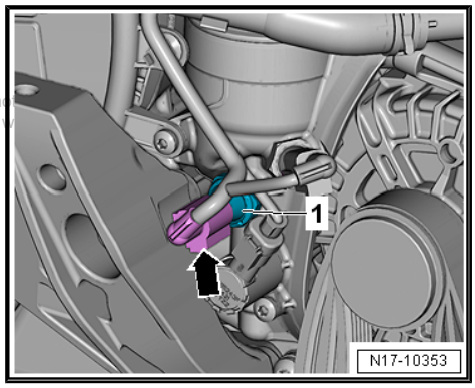

Fitting

Installation is carried out in the reverse order; note the following:

Note

- *Renew seal.*
- *Screw oil pressure switch - F1- immediately into bore to avoid loss of oil.*

– Install the windscreen washer tank filler ⇒ Electrical system; Rep. gr. 92 ; Windscreen washer system; Removing and installing windscreen washer tank .

– Check oil level ⇒ page 203 .

Specified torques

- ⇒ “4.2 Exploded view - oil pressure switches/oil pressure control”, page 222

4.5 Removing and installing oil pressure switch for reduced oil pressure - F378-

Special tools and workshop equipment required

- 24 mm jointed spanner - T40175-

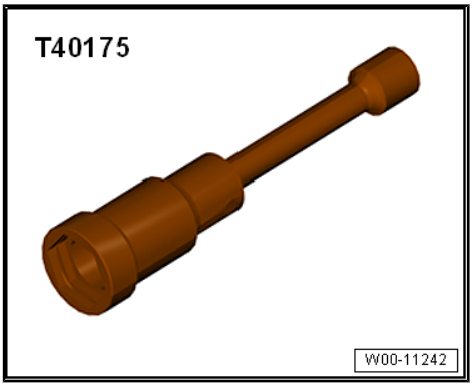

Removing

Vehicles with auxiliary radiator (left-side):

– Remove windscreen washer tank filler -2- ⇒ Electrical system; Rep. gr. 92 ; Windscreen washer system; Removing and installing windscreen washer tank .

Continued for all vehicles

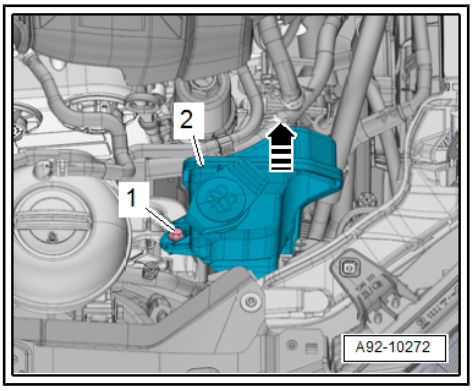

Note

- *Place a cloth underneath bracket for ancillaries to catch any escaping oil.*
- *Since the seal cannot be renewed individually, the oil pressure switch needs to be renewed following removal.*

– Unplug electrical connector -arrow- at oil pressure switch for reduced oil pressure - F378- .

– Unscrew oil pressure switch for reduced oil pressure -1-.

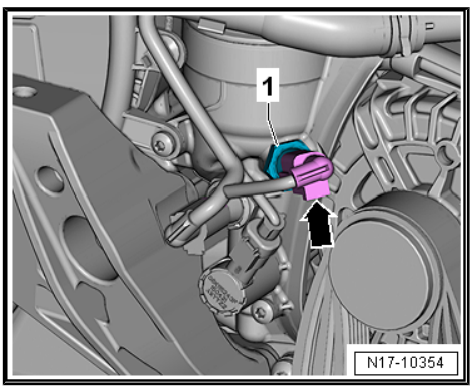

Fitting

Installation is carried out in the reverse order; note the following:

Note

- *Renew seal.*
- *Fit the new oil pressure switch for reduced oil pressure - F378- into the connection immediately to avoid loss of oil.*

– Install the windscreen washer tank filler ⇒ Electrical system; Rep. gr. 92 ; Windscreen washer system; Removing and installing windscreen washer tank .

– Check oil level ⇒ page 203 .

Specified torques

- ⇒ “4.2 Exploded view - oil pressure switches/oil pressure control”, page 222

4.6 Removing and installing stage 3 oil pressure switch - F447-

Special tools and workshop equipment required

- 24 mm jointed spanner - T40175-

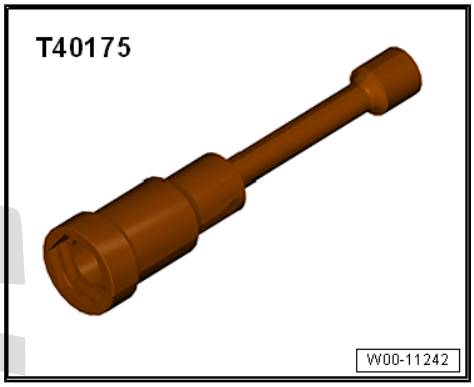

Note

Renew the seal each time the oil pressure switch has been loosened.

Removing

- Remove noise insulation ⇒ General body repairs, exterior; Rep. gr. 66 ; Noise insulation; Assembly overview - noise insulation .
- Remove air filter housing ⇒ page 356 .
- Vehicles with auxiliary radiator (left-side): Move coolant hose -3- clear.
- Free electrical wiring harnesses -1- and -2- from fittings and lay them to one side.
- Unfasten screw-type clip -4-.
- Unscrew bolts -arrows- and detach air pipe downwards.

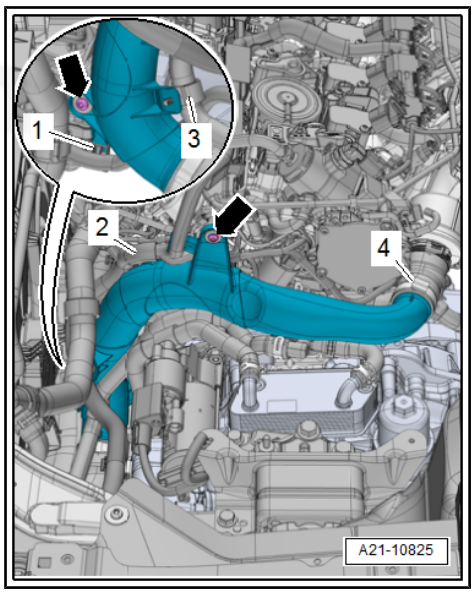

– Loosen hose clip -arrow-, and remove charge air hose -1- downwards, together with air pipe.

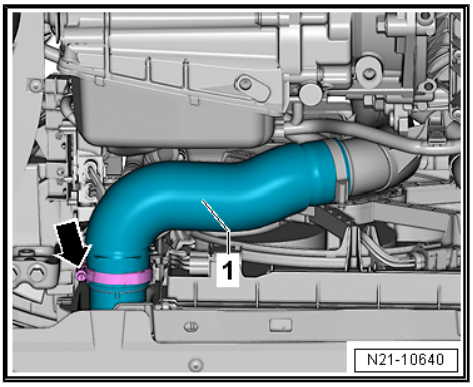

– Unplug electrical connector -1- on stage 3 oil pressure switch - F447- .

– Remove bolts -arrows- and detach toothed belt cover.

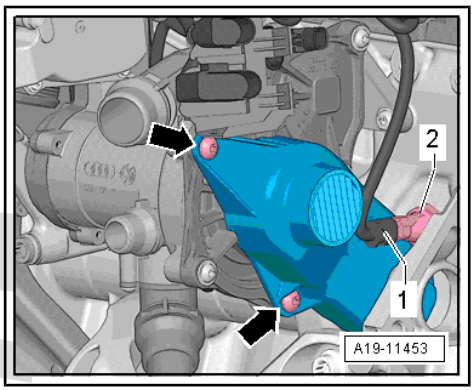

Note

Use a cloth to collect the leaking engine oil.

– Remove stage 3 oil pressure switch - F447- -item 2- with 24 mm articulated wrench - T40175- .

Fitting

Install in the reverse order of removal, observing the following:

Note

- *Renew seal.*
- *Screw new stage 3 oil pressure switch - F447- immediately into bore to avoid loss of oil.*

– check oil level⇒ Maintenance ; Booklet 501 .

Specified torques

- ⇒ “4.2 Exploded view - oil pressure switches/oil pressure control”, page 222
- ⇒ “3.1 Exploded view - air cleaner housing”, page 355
- Assembly overview - noise insulation ⇒ General body repairs, exterior; Rep. gr. 66 ; Noise insulation; Assembly overview - noise insulation .

4.7 Checking oil pressure

⇒ “4.7.1 Checking engine oil pressure”, page 227

⇒ “4.7.2 Checking oil pressure and oil spray jets”, page 229

4.7.1 Checking engine oil pressure

Special tools and workshop equipment required

- Oil pressure tester - V.A.G 1342-

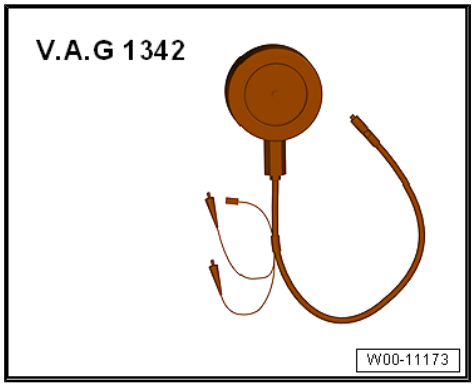

- 24 mm jointed spanner - T40175-

Test requirements

- Oil level OK
- Minimum temperature of engine oil 80 °C (the radiator fan must have started once).

Note

- *The oil pump is regulated and has 2 pressure levels. The pressure levels are checked subsequently.*
- *During the run-in period or emergency running mode of the engine the oil pump operates only at high pressure level.*
- *The oil pressure depends on the engine oil temperature. At an engine oil temperature of 80°C, the approximate middle value must be reached.*

Development

Vehicles with windscreen washer tank, right side:

– Remove windscreen washer tank filler -2- ⇒ Electrical system; Rep. gr. 92 ; Windscreen washer system; Removing and installing tank for windscreen washer system .

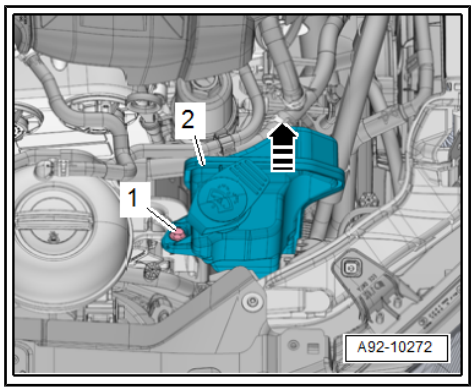

Continued for all vehicles

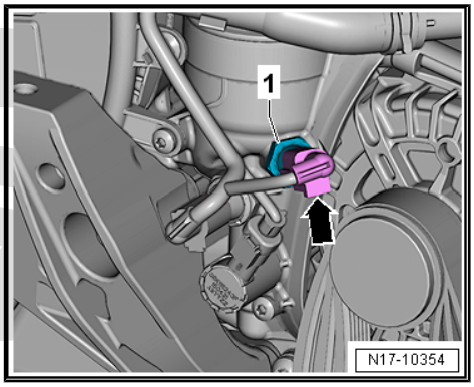

– Unplug electrical connector -arrow- at oil pressure switch for reduced oil pressure - F378- .
– Place a cloth underneath bracket for ancillaries to catch any escaping engine oil.
– Unscrew oil pressure switch for reduced oil pressure -1-.
– Screw the oil pressure tester - V.A.G 1342- into oil filter bracket in place of oil pressure switch.
– Screw oil pressure switch for reduced oil pressure - F378- into oil pressure tester , and connect connector.
– Connect oil pressure tester to earth.
– Start engine, and check oil pressure at the specified engine speed levels.
• Oil pressure at idling speed: 0.85…1.6 bar
• Oil pressure at 2000 rpm: 1.2 … 1.6 bar
• Oil pressure at 3000 rpm: 1.2 … 1.6 bar
– Switch off engine.
– Remove the noise insulation ⇒ chassis, installation work, exterior; Rep. gr. 66 ; noise silencer; installation overview - noise insulation .

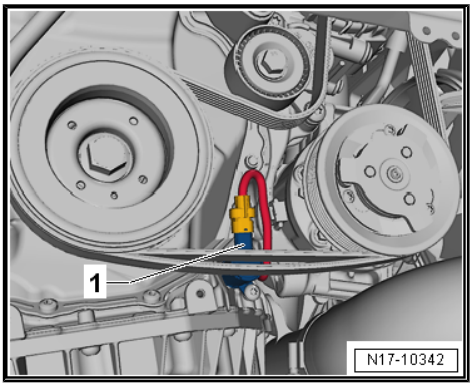

– Pull connector -1- off valve for oil pressure control - N428- . Unclip cable and route it towards bottom to prevent it from being trapped in the belt drive. With disconnected connector the oil pump operates at high pressure level.
– Start engine, and check oil pressure at the specified engine speed levels.
• Oil pressure at idling speed: 0.85…4.0 bar
• Oil pressure at 2000 rpm: 2.0 to 4.0 bar
• Oil pressure at 3000 rpm: 3.0 to 4.0 bar

Assembly

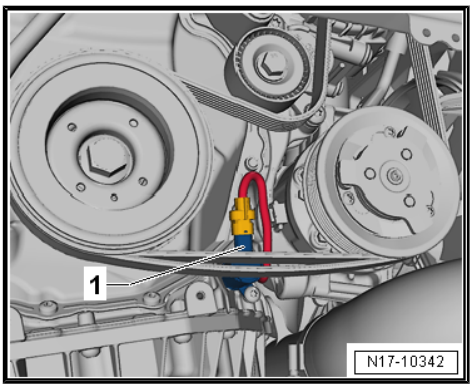

– Install oil pressure switch.
– Connect connector -1- to valve for oil pressure control - N428- . Route cable carefully.
– Remove noise insulation ⇒ General body repairs, exterior; Rep. gr. 66 ; Noise insulation; Assembly overview - noise insulation .
– Install the windscreen washer tank filler ⇒ Electrical system; Rep. gr. 92 ; Windscreen washer system; Removing and installing windscreen washer tank .
– Read engine control unit event memory, and clear all entries.

Specified torques

♦ ⇒ “4.2 Exploded view - oil pressure switches/oil pressure control”, page 222

4.7.2 Checking oil pressure and oil spray jets

Special tools and workshop equipment required

- Oil pressure tester - V.A.G 1342-

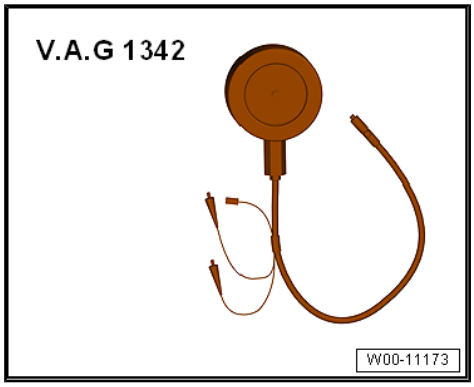

- 24 mm jointed spanner - T40175-

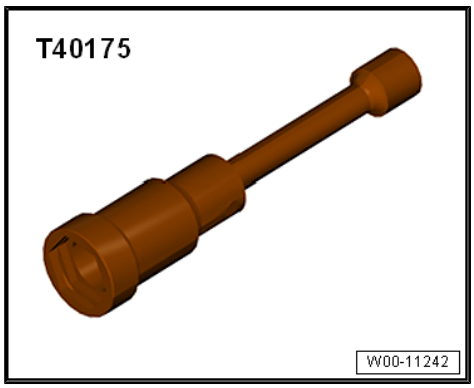

- Adapter for the testing functions - VAS 5571-

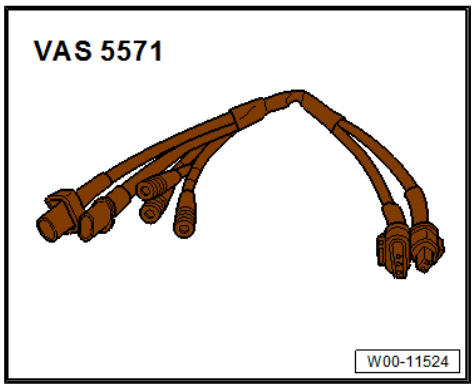

Note

During this check procedure, the piston cooling jet control valve - N522- and the oil passage to the oil spray jets for cooling the pistons are checked.

Test requirements

- Oil level OK
- Engine oil pressure OK.
- Oil pressure tester - V.A.G 1342- is connected as described in section ⇒ “4.7.1 Checking engine oil pressure”, page 227.

Test procedure

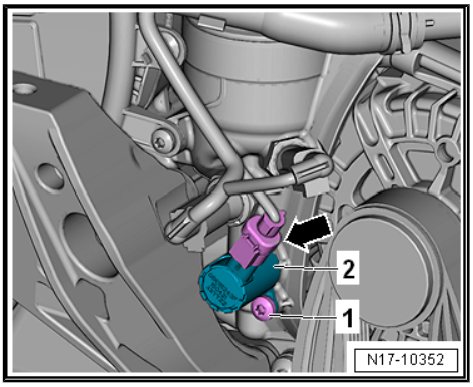

- Pull connector -arrow- off piston cooling jet control valve - N522- . Connect connector and control valve to test instrument adapter - VAS 5571- .
- Start engine and allow to run at idling speed.
- Observe oil pressure tester , disconnect connector for control valve, and connect it again. A pressure variation must be indicated on the oil pressure tester .

Note

If the engine runs at idling speed, the oil passage to the oil spray jets is closed. When the connector is pulled off, the oil passage to the oil spray jets is opened. If no pressure variation is indicated, the piston cooling jet control valve - N522- is defective, or the oil passage to the oil spray jets is blocked.

4.8 Removing and installing valve for oil pressure control - N428-

Special tools and workshop equipment required

- Used oil collection and extraction unit - VAS 6622A-

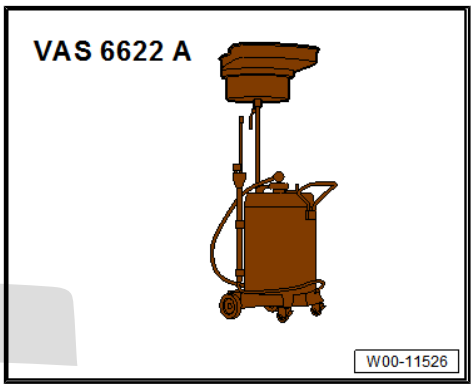

Removing

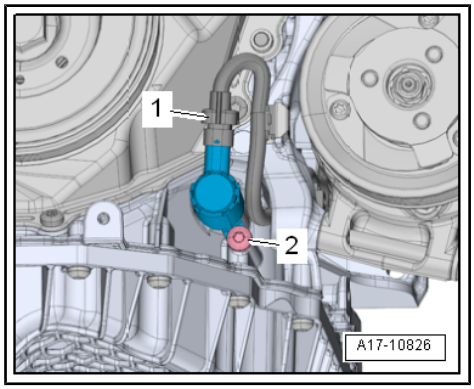

- Remove the poly V-belt ⇒ page 60 .
- Place the used oil collection and extraction unit - VAS 6622A- below engine.
- Unplug electrical connector -1-.
- Remove bolt -2- and detach valve for oil pressure control - N428- -3-.

Fitting

Install in the reverse order of removal, observing the following:

Note

Renew O-ring.

Specified torques

- ⇒ “4.2 Exploded view - oil pressure switches/oil pressure control”, page 222
- Assembly overview - noise insulation ⇒ General body repairs, exterior; Rep. gr. 66 ; Noise insulation; Assembly overview - noise insulation .

19 – Cooling

1 Cooling system/coolant

1.1 Connection diagram - coolant hoses

1.1.1 Connection diagram - Vehicles with manual gearbox

Note

- *Blue = large coolant circuit.*
- *Red = small coolant circuit.*
- *Brown = heater circuit.*
- *Yellow = gear oil cooling circuit.*
- *Arrows show direction of coolant flow.*

Vehicles without gear oil cooling

1 - Radiator

2 - Coolant temperature sender at the radiator outlet - G83-

3 - Actuator for engine temperature regulation - N493-

4 - Cylinder head/cylinder block

5 - Throttle

6 - Auxiliary Heater
- ❑ Optional equipment

7 - Coolant expansion tank

8 - Filler cap for expansion tank
- ❑ Checking pressure relief valve ⇒ page 247

9 - Non-return valve

10 - Exhaust manifold
- ❑ Integrated in cylinder head

11 - Turbocharger

12 - Heat exchanger for heater

13 - Throttle

14 - Non-return valve

15 - Auxiliary pump for heating - V488-

16 - Coolant temperature sensor - G62-

17 - Coolant shut-off valve - N82-

18 - Throttle

19 - Coolant pump

20 - Non-return valve

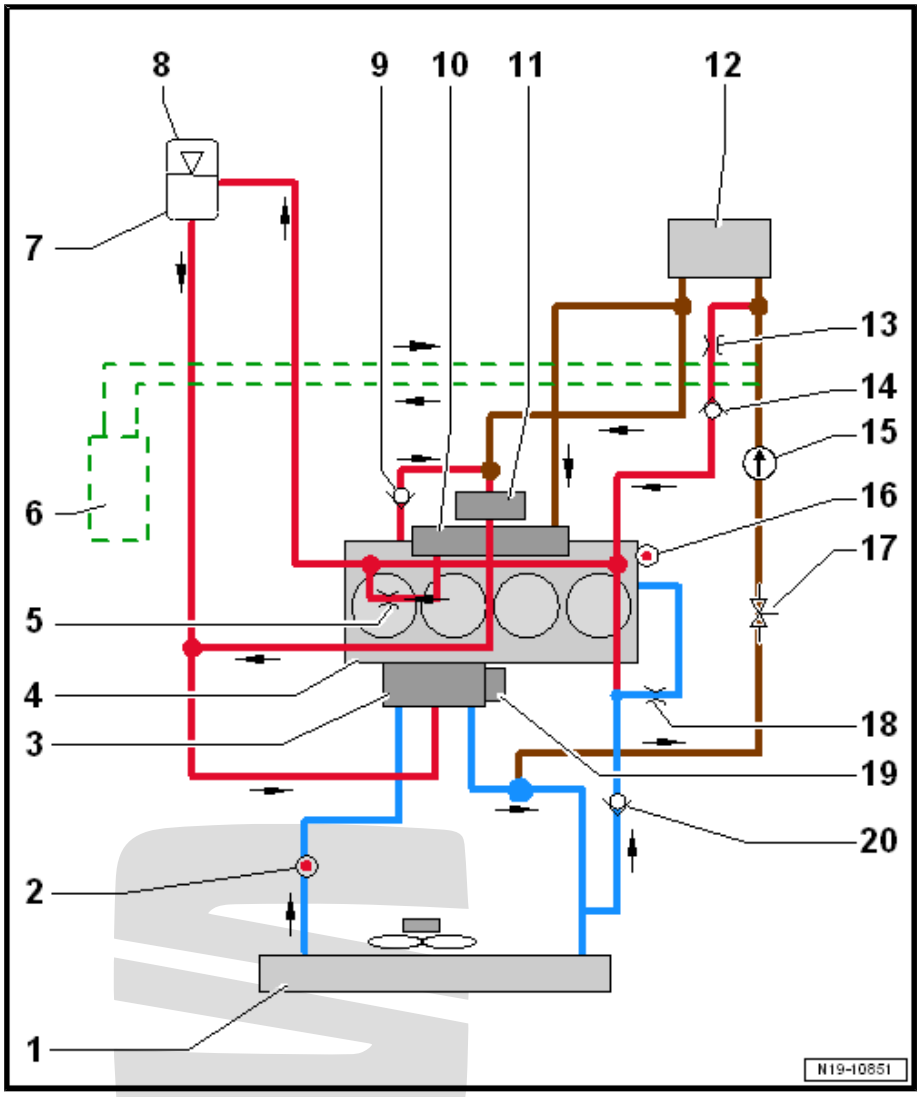

1.1.2 Schematic diagram, vehicles with dual clutch gearbox

Note

- *Blue = large coolant circuit.*
- *Red = small coolant circuit.*
- *Brown = heater circuit.*
- *Yellow = gear oil cooling circuit.*
- *Arrows show direction of coolant flow.*

Vehicles with gear oil cooling

1 - Radiator

2 - Coolant temperature sender at the radiator outlet - G83-

3 - Actuator for engine temperature regulation - N493-

4 - Cylinder head/cylinder block

5 - Throttle

6 - Auxiliary Heater
- ❑ Not installed

7 - Coolant expansion tank

8 - Filler cap for expansion tank
- ❑ Checking pressure relief valve ⇒ page 247

9 - Non-return valve

10 - Exhaust manifold
- ❑ Integrated in cylinder head

11 - Turbocharger

12 - Heat exchanger for heater

13 - Throttle

14 - Non-return valve

15 - Auxiliary pump for heating - V488-

16 - Coolant temperature sensor - G62-

17 - Coolant shut-off valve - N82-

18 - Throttle

19 - Coolant pump

20 - Gearbox oil cooler

21 - Coolant shut-off valve - N82-

22 - Non-return valve

23 - Auxiliary radiator

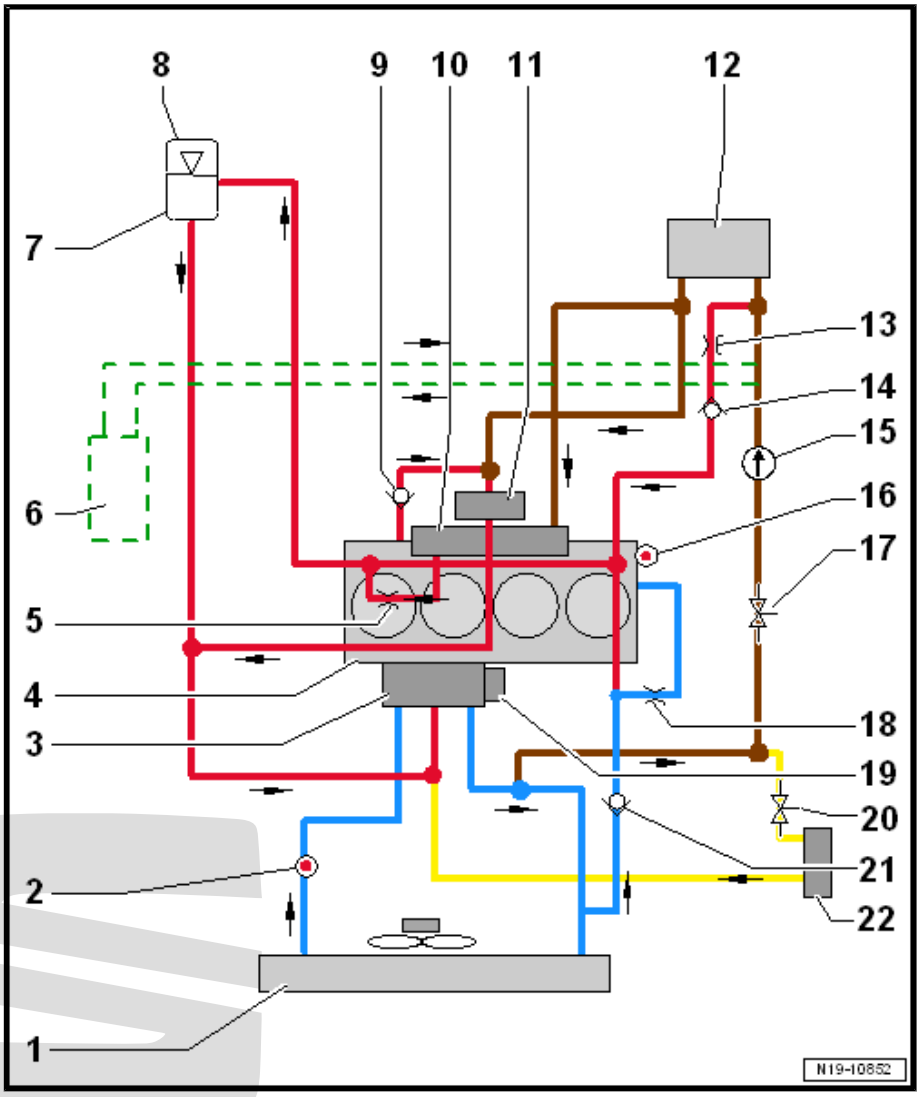

1.1.3 Vehicles with dual clutch gearbox and auxiliary radiator on the left side

Note

- *Blue = large coolant circuit.*
- *Red = small coolant circuit.*
- *Brown = heater circuit.*
- *Yellow = gear oil cooling circuit.*
- *Arrows show direction of coolant flow.*

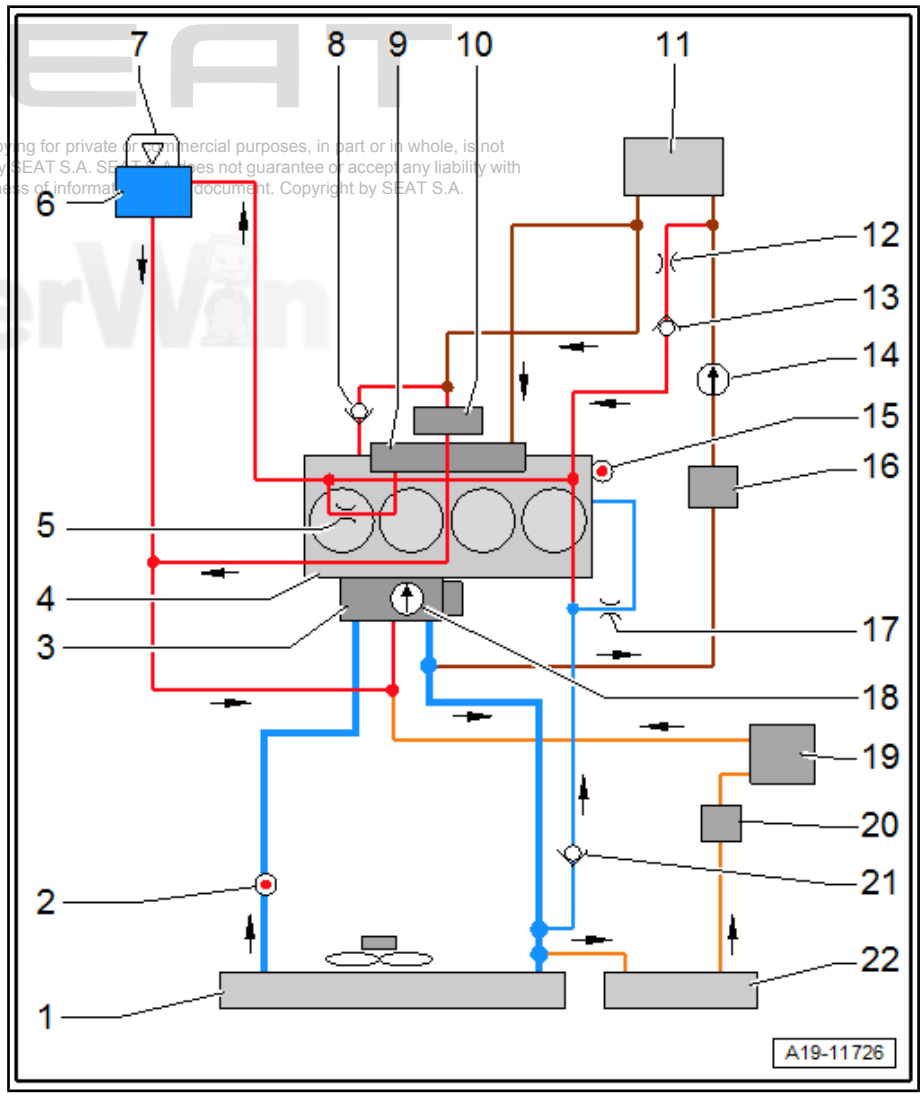

1 - Radiator

2 - Coolant temperature sender at the radiator outlet - G83-

3 - Actuator for engine temperature regulation - N493-

4 - Cylinder head/cylinder block

5 - Throttle

6 - Coolant expansion tank

7 - Filler cap for expansion tank

- ❑ Checking pressure relief valve ⇒ page 247

8 - Non-return valve

9 - Exhaust manifold

- ❑ Integrated in cylinder head

10 - Turbocharger

11 - Heat exchanger for heater

- ❑ Change coolant after renewing.

12 - Throttle

13 - Non-return valve

14 - Continued coolant circulation pump - V51-

15 - Coolant temperature sensor - G62-

16 - Coolant shut-off valve - N82-

17 - Throttle

18 - Coolant pump

19 - Gearbox oil cooler

20 - Coolant valve for gearbox - N488-

21 - Non-return valve

22 - Auxiliary radiator

- ❑ Fitting location: In the front left wheel housing liner

1.1.4 Vehicles with dual clutch gearbox and auxiliary radiator on right and left sides

Note

- *Blue = large coolant circuit.*
- *Red = small coolant circuit.*
- *Brown = heater circuit.*
- *Yellow = gear oil cooling circuit.*
- *Arrows show direction of coolant flow.*

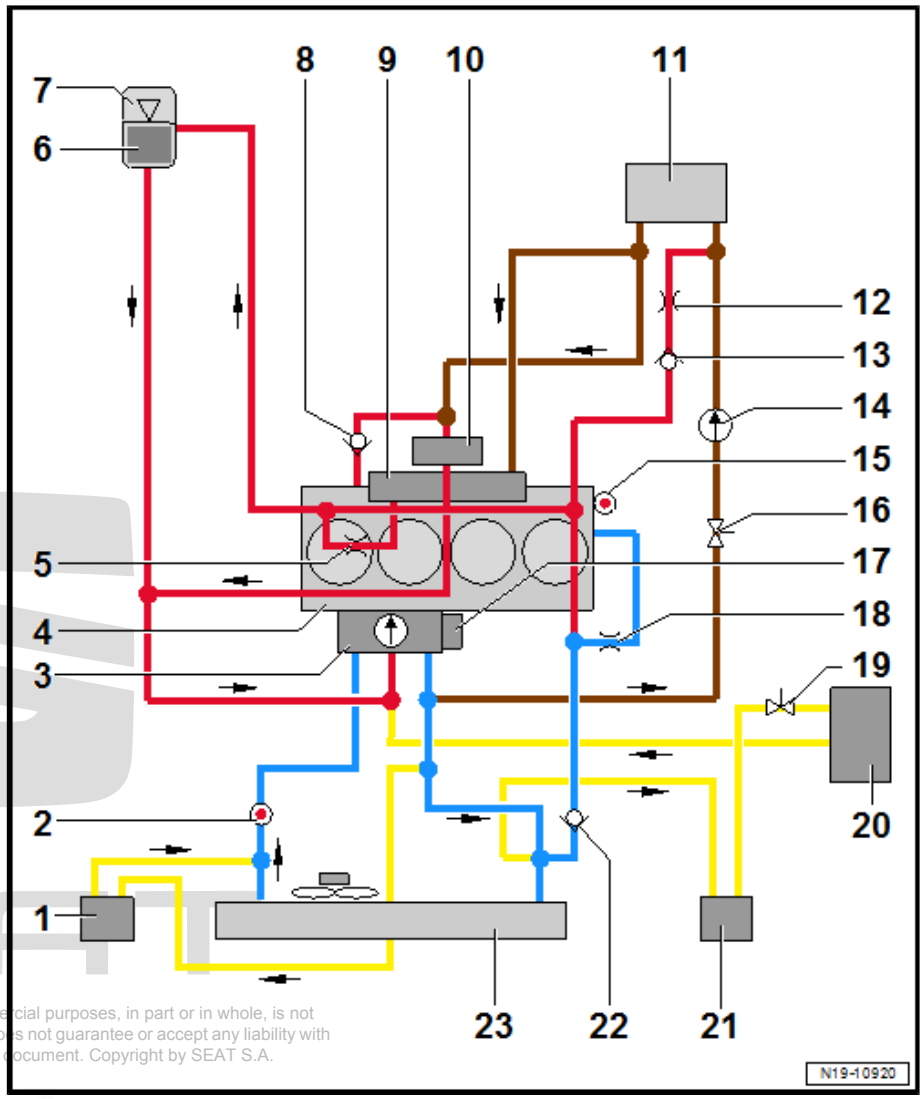

1 - Auxiliary radiator

- ❑ Location: in right rear wheel housing
- ❑ General exploded view ⇒ page 292
- ❑ Removing and installing ⇒ page 292

2 - Coolant temperature sender at the radiator outlet - G83-

- ❑ General exploded view ⇒ page 273
- ❑ Removing and installing ⇒ page 285

3 - Actuator for engine temperature regulation - N493-

4 - Cylinder head/cylinder block

- ❑ Renew coolant after renewing
- ❑ General exploded view ⇒ page 105
- ❑ Removing and installing ⇒ page 108

5 - Throttle

6 - Coolant expansion tank

7 - Filler cap for expansion tank

- ❑ Checking pressure relief valve ⇒ page 247

8 - Non-return valve

9 - Exhaust manifold

10 - Turbocharger

- ❑ General exploded view ⇒ page 307
- ❑ Removing and installing ⇒ page 309

11 - Heat exchanger for heater

- ❑ Renew coolant after renewing

12 - Throttle

13 - Non-return valve

14 - Auxiliary pump for heating - V488-

- ❑ General exploded view ⇒ page 270
- ❑ Removing and installing ⇒ page 277

15 - Coolant temperature sender - G62-

- ❑ General exploded view ⇒ page 273
- ❑ Removing and installing ⇒ page 284

16 - Coolant shut-off valve - N82-

- ❑ General exploded view ⇒ page 270
- ❑ Removing and installing ⇒ page 278

17 - Coolant pump

- ❑ General exploded view ⇒ page 268
- ❑ Removing and installing ⇒ page 276

18 - Throttle

19 - Coolant valve for gearbox - N488-

20 - ATF cooler

21 - Auxiliary radiator

- ❑ Location: in left rear wheel housing
- ❑ General exploded view ⇒ page 292
- ❑ Removing and installing ⇒ page 303

22 - Non-return valve

23 - Coolant radiator

- ❑ Renew coolant after renewing
- ❑ General exploded view ⇒ page 291
- ❑ Removing and installing ⇒ page 295

1.2 Draining and filling coolant

Special tools and workshop equipment required

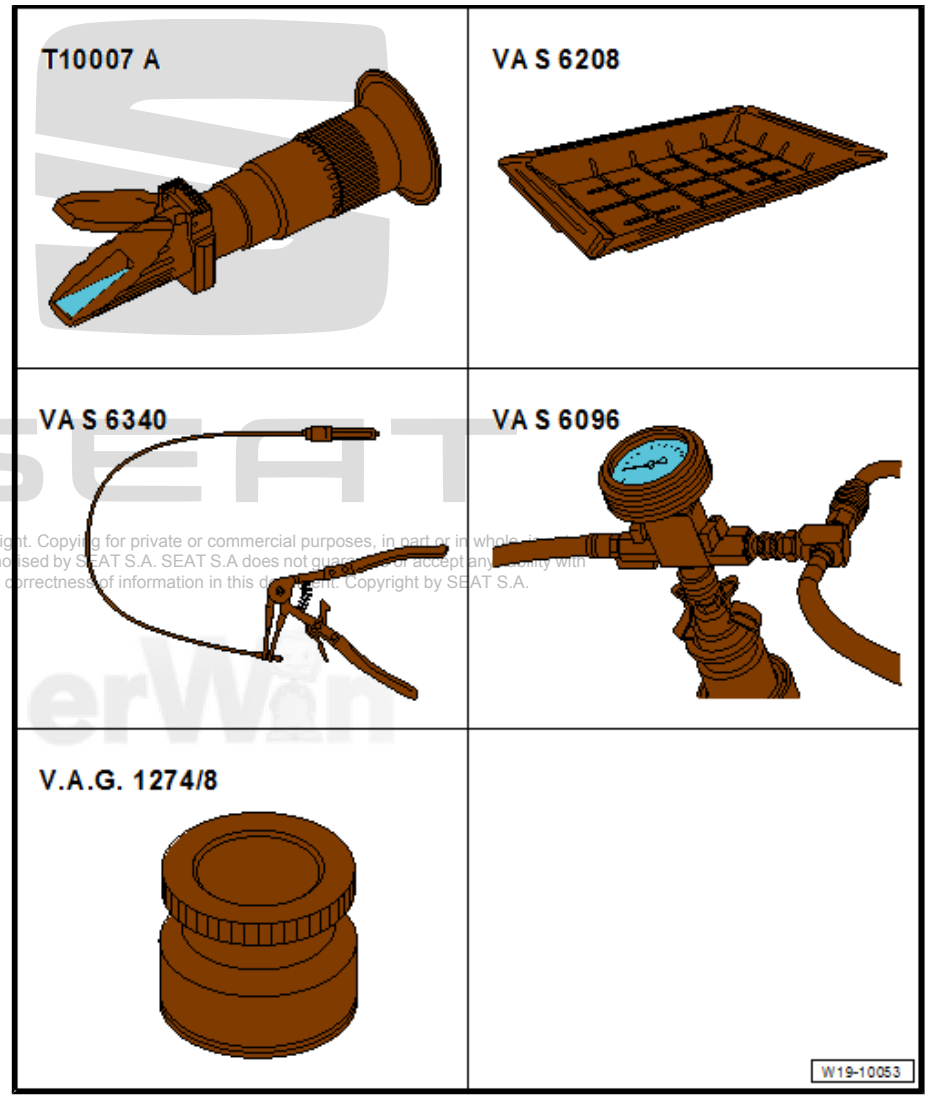

- Refractometer - T10007 A-
- Drip tray for workshop hoist - VAS 6208-
- Hose clip pliers - VAS 6340-
- Cooling system charge unit - VAS 6096-
- Adapter for cooling system tester - V.A.G 1274/8-

Draining off

CAUTION

There is an overpressure in the cooling system when the engine is hot. Danger of scalding by steam and hot coolant.

Risk of scalding to skin and body parts.

- **Wear protection gloves.**
- **Wear safety goggles.**
- **Reduce excess pressure by covering cap of coolant expansion tank with cloths and opening it carefully.**

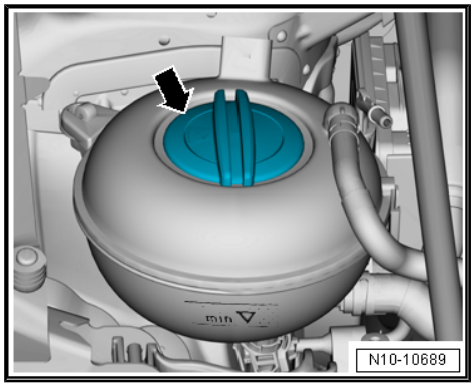

- Open filler cap -arrow- on coolant expansion tank.
- Remove noise insulation ⇒ General body repairs, exterior; Rep. gr. 66 ; Noise insulation; Assembly overview - noise insulation .
- Place drip tray for workshop hoist - VAS 6208- underneath.
- Lift retaining clip -3-, disconnect coolant hose (bottom right) from radiator and drain off coolant.

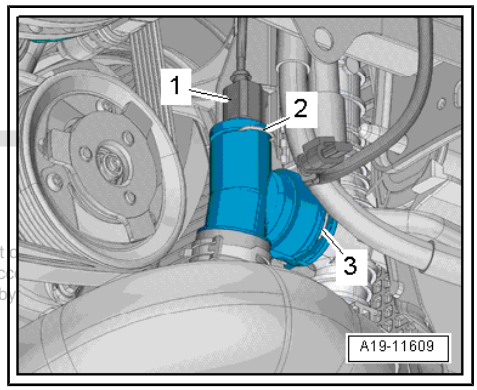

Note

Ignore -items 1 and 2-.

Filling

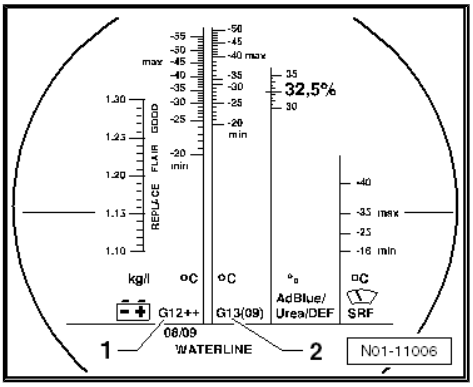

Note

- *The water used for mixing has a major influence on the effectiveness of the coolant. Since water quality differs from country to country and even region to region, it is necessary to set a standard for the quality of water to be used. Distilled water satisfies all requirements. It is therefore recommended to use distilled water when mixing coolant for topping up or replacing coolant.*
- *Only coolant additives listed in the ⇒ Electronic parts catalogue (ETKA) must be used. Other additives may have considerable effect on the anti-corrosion. The resulting damage could lead to loss of coolant and, consequently, to major engine damage.*
- *Mixed in the proper proportions, coolant inhibits frost and corrosion damage as well as calcium deposits. Such additives also raise the boiling point of the coolant. For these reasons, the cooling system must be filled all year round with a coolant additive.*
- *Thanks to this rise in the boiling point, the coolant guarantees good running, even when the engine undergoes heavy strain, especially in countries with tropical climates.*
- *ONLY a refractometer - T10007A- may be used for determining the current anti-freeze value.*
- *The frost protection must be effective down to at least -25 °C, and approx. -36 °C in cold countries. The effectiveness of the frost protection may only be increased if a higher level of frost protection is required due to the climate. But only to -48 °C. Otherwise, the cooling effect of the coolant will be impaired.*
- *The concentration of the coolant must not be reduced by adding water in summer or in countries with hot climates. Frost protection must be guaranteed down to at least -25 °C.*
- *Read the frost protection value from the respective scale for the coolant additive being used.*
- *The temperature read off the refractometer - T10007A- corresponds to the »ice flocculation point«. Flakes of ice may start forming in the coolant below this temperature.*
- *Never reuse old coolant.*
- *Use only a water/coolant additive mixture as a slip agent for coolant hoses.*

Recommended mixture ratio for coolant

- Coolant (40 %) and water (60 %) for frost protection to -25 °C
- Coolant (50 %) and water (50 %) for frost protection to -36 °C
- Coolant: ⇒ Electronic parts catalogue (ETKA)

Operation process

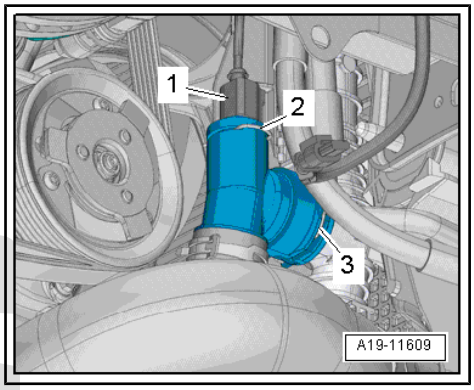

- Connect coolant hose with plug-in connector -3- to radiator at bottom right ⇒ page 292 .
- Connect connector of radiator outlet coolant temperature sender .

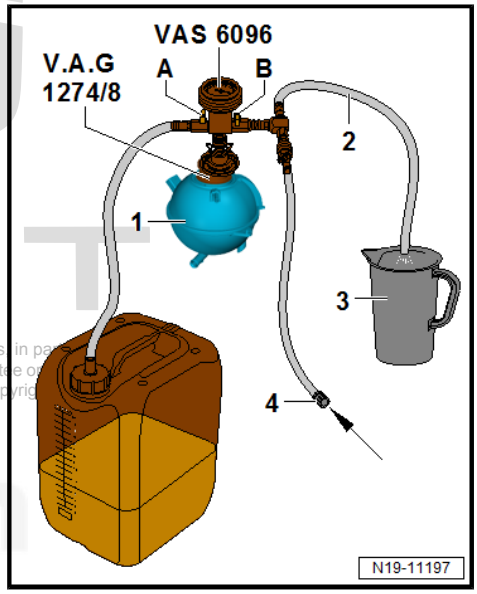

- Fill coolant expansion tank of -VAS 6096- with 10 litres of pre-mixed coolant in correct mixture ratio; mixture ratio ⇒ page 241 .
- Screw down adapter for cooling system tester - V.A.G 1274/8- to coolant expansion tank.
- Place cooling system charge unit - VAS 6096- on adapter - V.A.G 1274/8- .
- Feed vent hose -2- into a small container -3-.

Note

Exhaust air takes a slight quantity of coolant along with it; this should be collected.

- Close both valves -A- and -B- (turn lever at right angles to direction of flow).
- Fit hose -3- to compressed air supply with a pressure of 6 … 10 bar.
- Connect ⇒ Vehicle diagnostic tester, and select following functions.

♦ `0001 - Fill/bleed cooling system`

Filling with coolant:

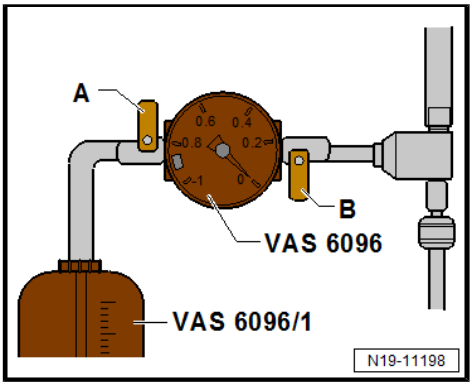

– Open valve -B- by setting lever in direction of flow.

• The suction jet pump generates a vacuum in the cooling system. The display instrument needle must move to the green area.

– Also briefly open valve -A- (turn lever in direction of flow to do this) so that hose on -VAS 6096- coolant reservoir fills with coolant.

– Close the valve -A- again.

– Leave valve -B- open for 2 further minutes.

• The suction jet pump will continue generating a vacuum in the cooling system. The pointer of the indicator must remain in the green zone.

– Close valve -B-.

• The needle on the gauge must stay in the green zone. Then the vacuum in the cooling system is sufficient for the subsequent filling.

Note

♦ *If the needle does not reach the green zone, repeat the process.*

♦ *If vacuum drops, cooling system must be checked for leaks.*

♦ *The subsequent filling must be performed »slowly«.*

– Pull off compressed air hose.

– Open valve -A- slowly.

• Vacuum in cooling system causes coolant to be extracted from -VAS 6096- coolant reservoir and coolant system to be filled.

• The coolant level must be above the max. marking after filling.

– Detach cooling system charge unit - VAS 6096- from coolant expansion tank.

– Fill coolant up to max. mark.

– Remove noise insulation ⇒ General body repairs, exterior; Rep. gr. 66 ; Noise insulation; Assembly overview - noise insulation .

– On vehicles with auxiliary heater, switch heater on (for about 30 seconds) and then off again.

– Set temperature to “HI”.

– Switch off air conditioner compressor (press AC button).

• LED in button should not light up.

– Start engine and run for 2 minutes (maximum) at approx. 1500 rpm.

– Top up coolant to overflow hole on expansion tank with engine running.

– Close filler cap on coolant expansion tank (make sure it engages).

– Then run engine at idling speed until radiator fan cuts in.

– Check coolant level.

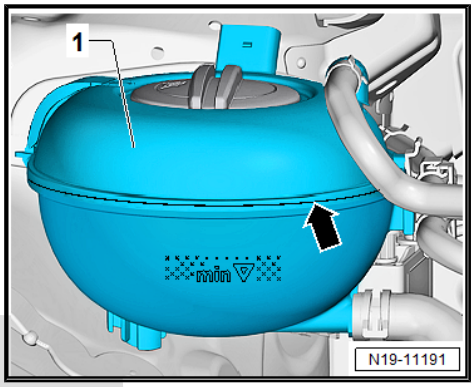

- When the engine is at operating temperature, the coolant level must be at the »weld seam« -arrow-.
- When the engine is cold, the coolant level must be approx. 5 mm above the max. mark -arrow-.

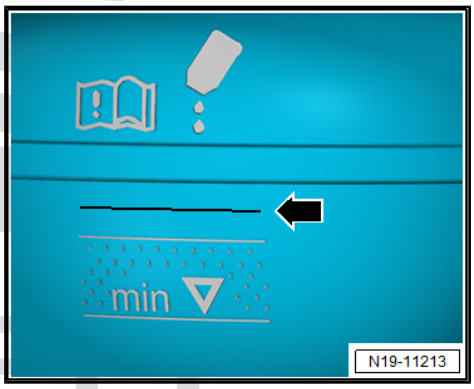

Note

This excessive amount of coolant level is necessary since the coolant level may decrease automatically due to bleeding process.

1.3 Checking cooling system for leaks

Special tools and workshop equipment required

- Adapter for cooling system tester - V.A.G 1274/8-
- Adapter for cooling system tester - V.A.G 1274/9-
- Cooling system tester - V.A.G 1274 B-

Note

To allow for an appropriate leakage test, a self test of the cooling system tester - V.A.G 1274 B- needs to be performed beforehand.

Self test of cooling system tester - V.A.G 1274 B-

– Operate cooling system tester - V.A.G 1274 B- several times.

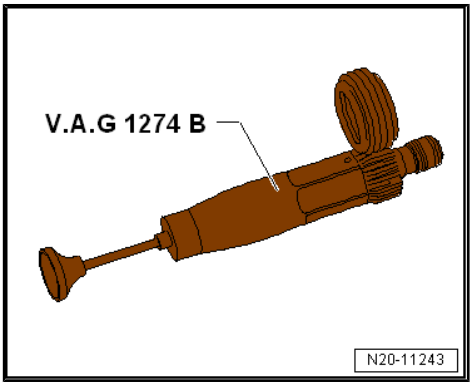

– Build up a pressure of 3.0 bar on cooling system tester .

– Observe pressure on pressure gauge of cooling system tester for 30 seconds.

If no pressure builds up or if the pressure drops again:

There is a leak in the cooling system tester - V.A.G 1274 B- , and it must not be used.

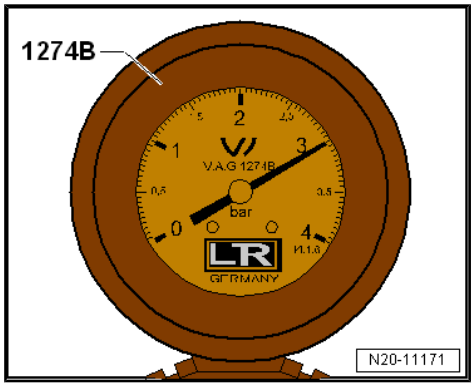

Operation process

- Engine at operating temperature.

CAUTION

On a warm engine, the cooling system is under high pressure. Danger of scalding by steam and hot coolant.

Risk of scalding to skin and body parts.

– Wear protection gloves.

– Wear safety goggles.

– Reduce excess pressure by covering cap of coolant expansion tank with cloths and opening it carefully.

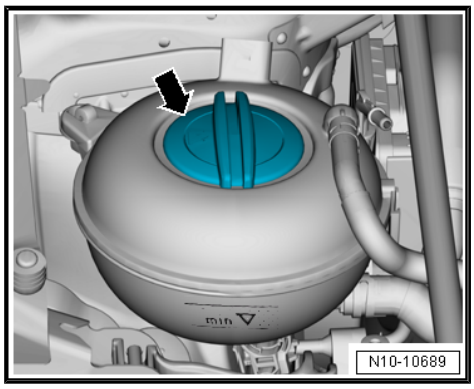

– Open filler cap -arrow- on coolant expansion tank.

– Fit cooling system tester - V.A.G 1274 B- with adapter - V.A.G 1274/8- onto coolant expansion tank.

– Using hand pump on cooling system tester, build up a pressure of approx. 1.5 bar.

- The pressure must not drop by more than 0.2 bar within 10 minutes.

– If the pressure drops by more than 0.2 bar, locate and rectify leaks.

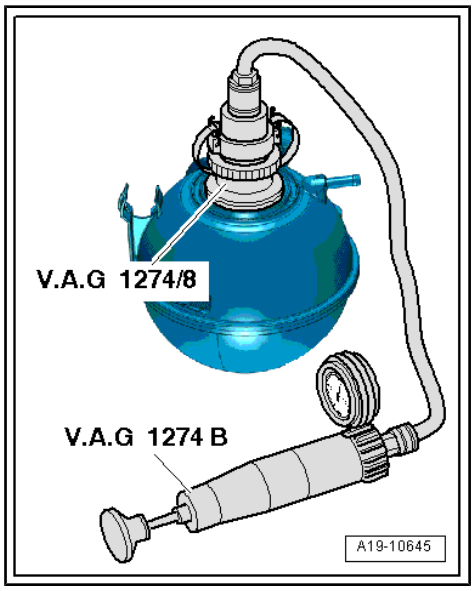

Note

The pressure drop by more than 0.2 bar within 10 minutes is caused by the coolant which cools down. The colder the engine, the lower the pressure drop. If necessary, repeat the check while the engine is cold.

Testing pressure relief valve in filler cap

– Fit cooling system tester - V.A.G 1274 B- with adapter - V.A.G 1274/9- onto filler cap.

– Build up pressure with hand pump on cooling system tester.

• The pressure relief valve must open at a pressure of 1.6 to 1.8 bar.

– Renew filler cap if pressure relief valve does not open as described.

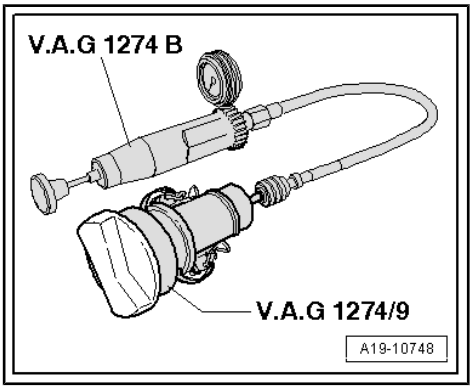

1.4 Flushing cooling system

Note

- *The coolant must be drained before the system is flushed. Then the cooling system must be filled with distilled water.*
- *The cooling system is flushed with 20 l of distilled water. Then, the distilled water is replaced by coolant (mixture ratio 50:50).*
- *Never reuse old coolant.*
- *For a quick reference guide, refer to* *⇒ "1.5 Flushing cooling system, quick reference guide", page 266**. The quick reference guide contains the basic steps of the workflow. It might be helpful to print out the guide and tick off the corresponding work steps after having performed them.*

Special tools and workshop equipment required

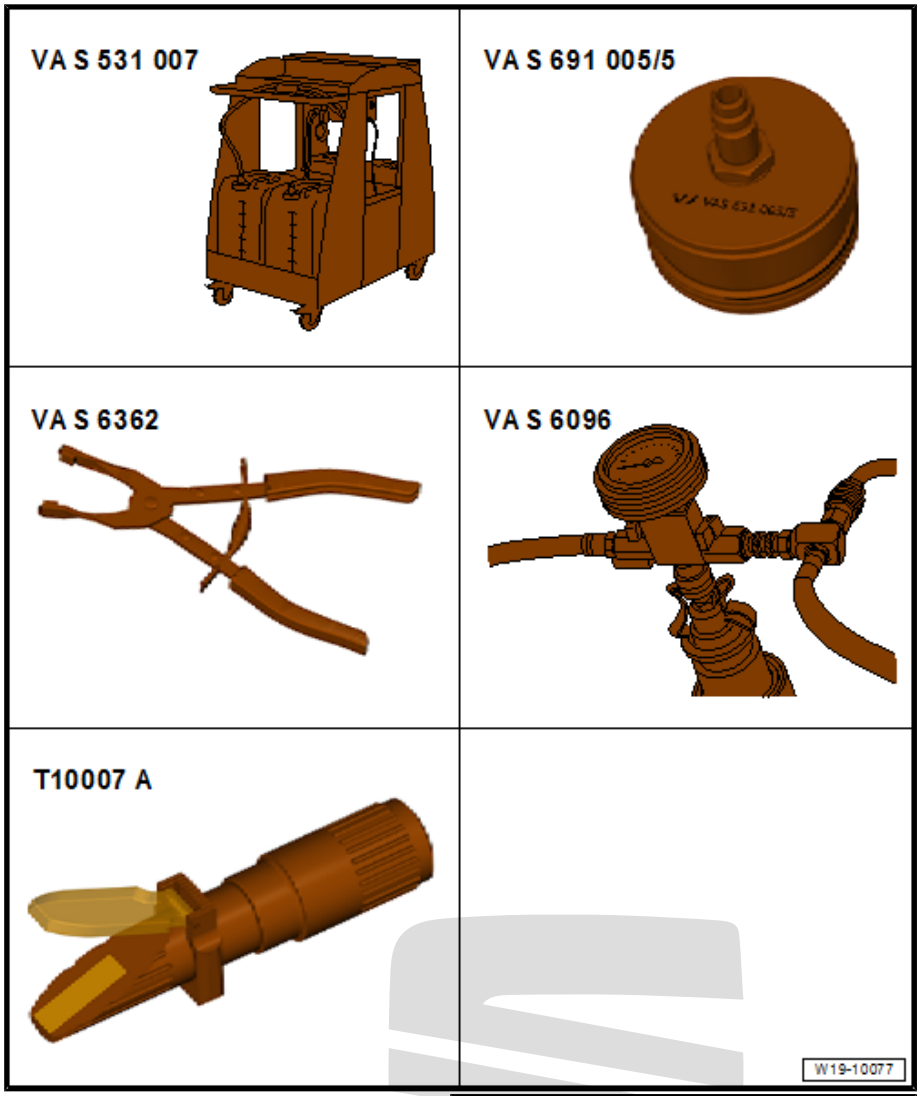

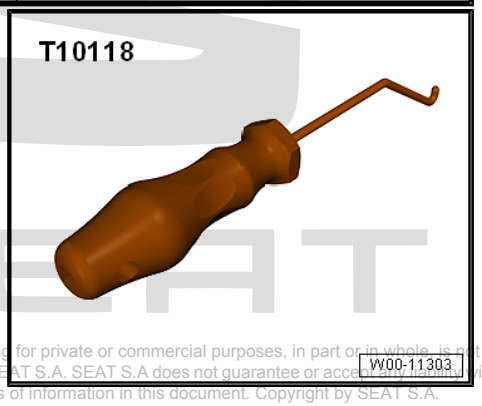

- Coolant flushing and filling device - VAS 531 007-
- Test adapter - VAS 691 005/5-
- Spring-type clip pliers - VAS 6362-
- Drip tray for workshop hoist - VAS 6208-
- Suction-jet pump from cooling system charge unit - VAS 6096-
- Refractometer - T10007 A-
- Compressed air connection with 6 … 10 bar(g)

♦ Assembly aid - T10118-

Schematic overview of coolant flushing and filling device - VAS 531 007- :

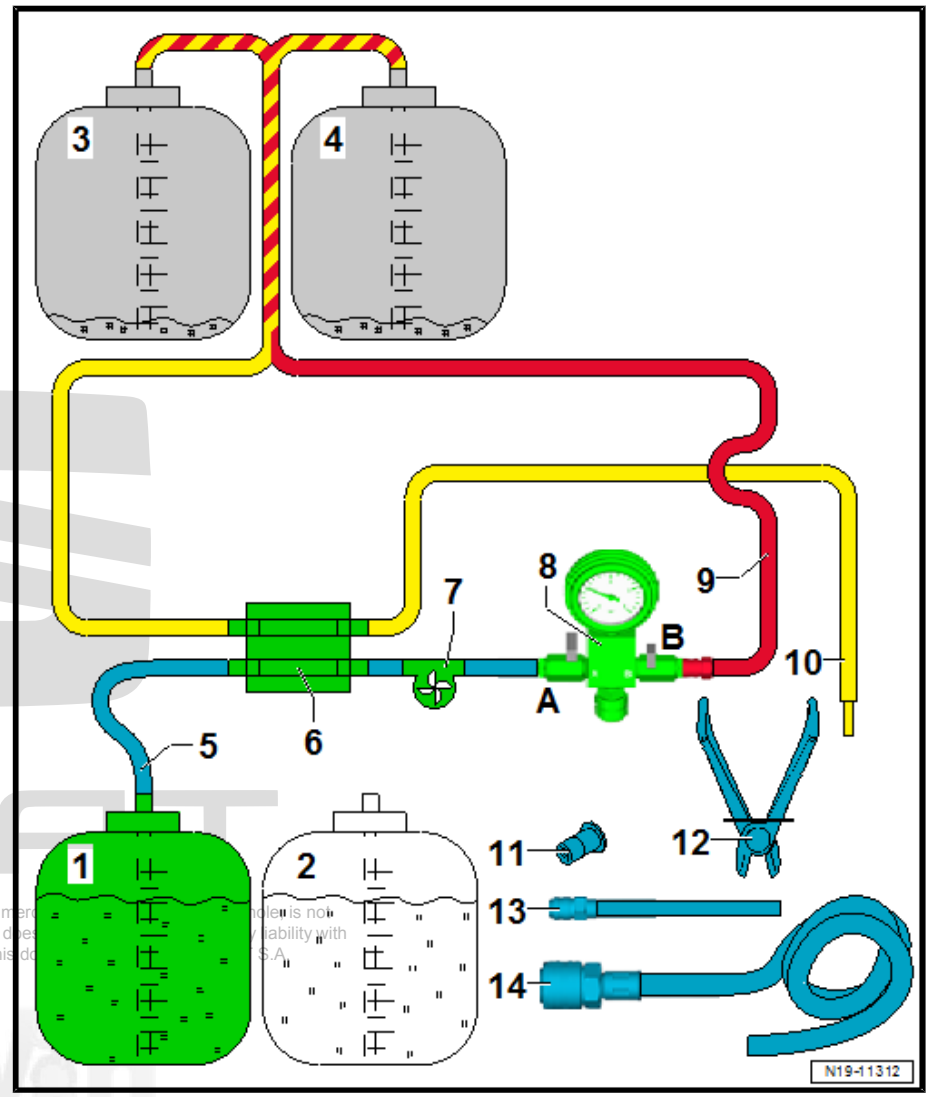

1 - Container with distilled water

- ❑ Fill with 30 l of distilled water

2 - Container with coolant

- ❑ Fill with 30 l of coolant
- ❑ Frost protection down to approx. -36 °C

3 - Empty container

- ❑ For used coolant

4 - Empty container

- ❑ For used coolant

5 - Extraction hose

- ❑ Comes from connection 2 on sight glass

6 - Window

- ❑ When opaque, clean sight class with a nylon brush

7 - Pump

- ❑ Cut-out pressure approx. 1.5 bar

8 - Valve block

- ❑ With pressure gauge and shut-off taps

9 - Drain hose

- ❑ Connected to valve block for releasing pressure

10 - Flushing hose

- ❑ Connected to breather hose of coolant expansion tank for flushing
- ❑ Comes from connection 1 on sight glass
- ❑ Seal with plugs when not in use

11 - Plug

12 - Hose clamps

- ❑ Qty. 4

13 - Cleaning adapter

- ❑ Approx. 15 cm in length
- ❑ For cleaning coolant flushing and filling device after flushing
- ❑ Connected between valve block and flushing hose ⇒ Item 10 (page 249) (10)

14 - Extraction adapter

- ❑ Approx. 100 cm in length
- ❑ Connected to suction hose ⇒ Item 5 (page 249) (5) for extracting coolant

Procedure:

- Remove engine cover panel ⇒ page 57 .
- Drain coolant ⇒ page 239 .
- With coolant hose pulled off, pour approximately 1 litre of distilled water into the coolant expansion tank.
- Drain coolant into drip tray .
- Re-connect detached coolant hoses.

Preparing coolant flushing and filling device - VAS 531 007- :

- Fill container »1« with 30 l of distilled water.
- Fill container »2« with 30 l of coolant. Mixture ratio is 50:50 for frost protection down to approx. -36°C.
- Empty containers »3« and »4«.
- Remove valve block from plug-in connector on equipment trolley.
- Connect coolant flushing and filling device - VAS 531 007- to battery.

Bleeding coolant flushing and filling device - VAS 531 007- :

- Connect suction hose -A- to container »1« with distilled water.

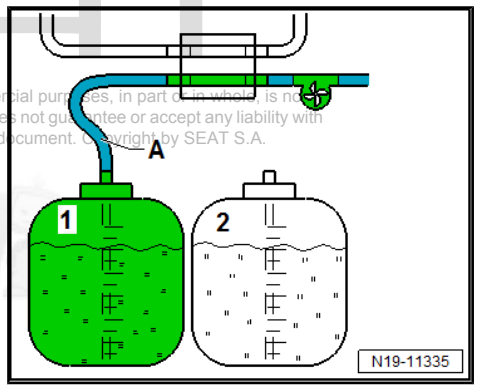

- Connect drain hose -arrow- to plug-in connector -B- on valve block.

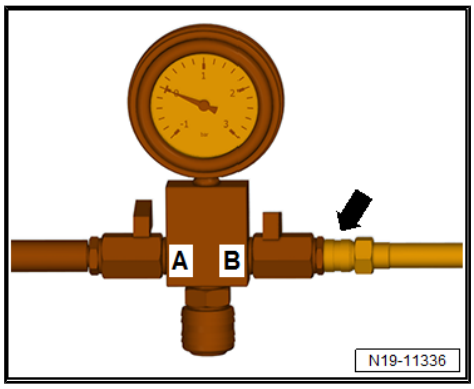

– Close shut-off taps -A- and -B-.

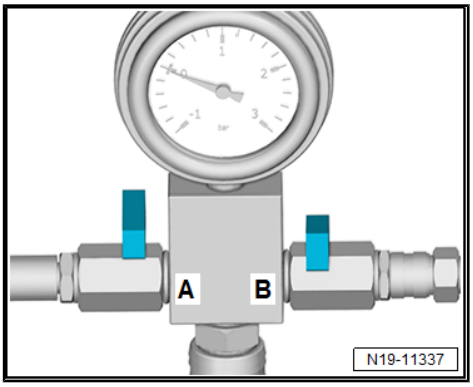

Note

Do not fit the valve block onto the test adapter - VAS 691 005/5- yet. The filler hose must be bled first.

– Switch on pump for -VAS 531 007- .
– Open cut-off tap -A-.
– Open shut-off tap -B- briefly to bleed filler hose.
– Close shut-off taps -A- and -B-.

Connecting coolant flushing and filling device - VAS 531 007- :

– Open filler cap -arrow- of coolant expansion tank.

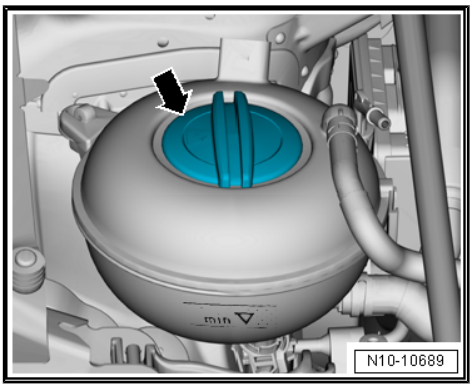

– Screw test adapter -2- (-VAS 691 005/5-) onto coolant expansion tank -1-.

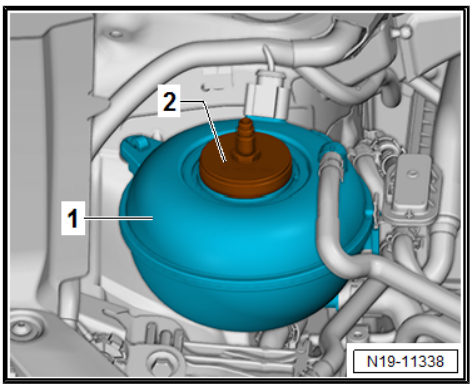

– Pull drain hose -arrow- off plug-in connector -B- on valve block.

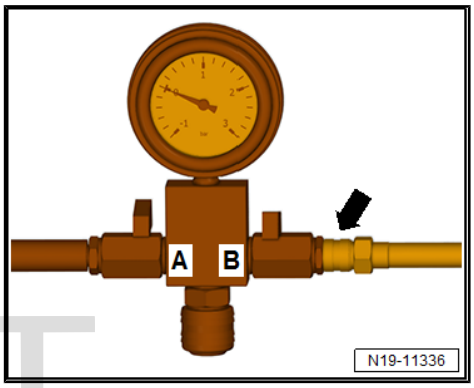

– Fit valve block -1- onto test adapter -2-.

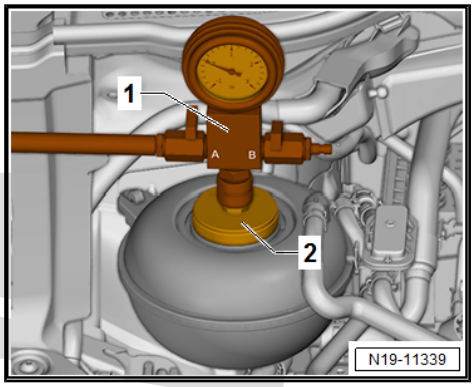

– Connect suction-jet pump -2- from -VAS 6096- to plug-in connector -B- on valve block -1-.

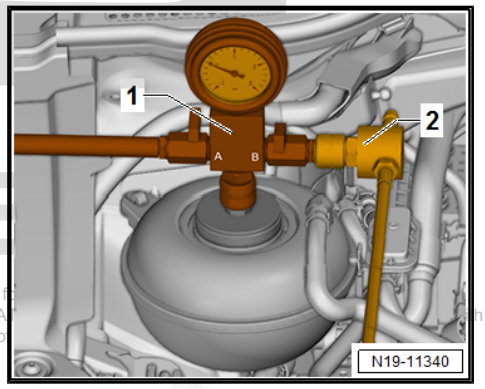

Filling cooling system with distilled water:

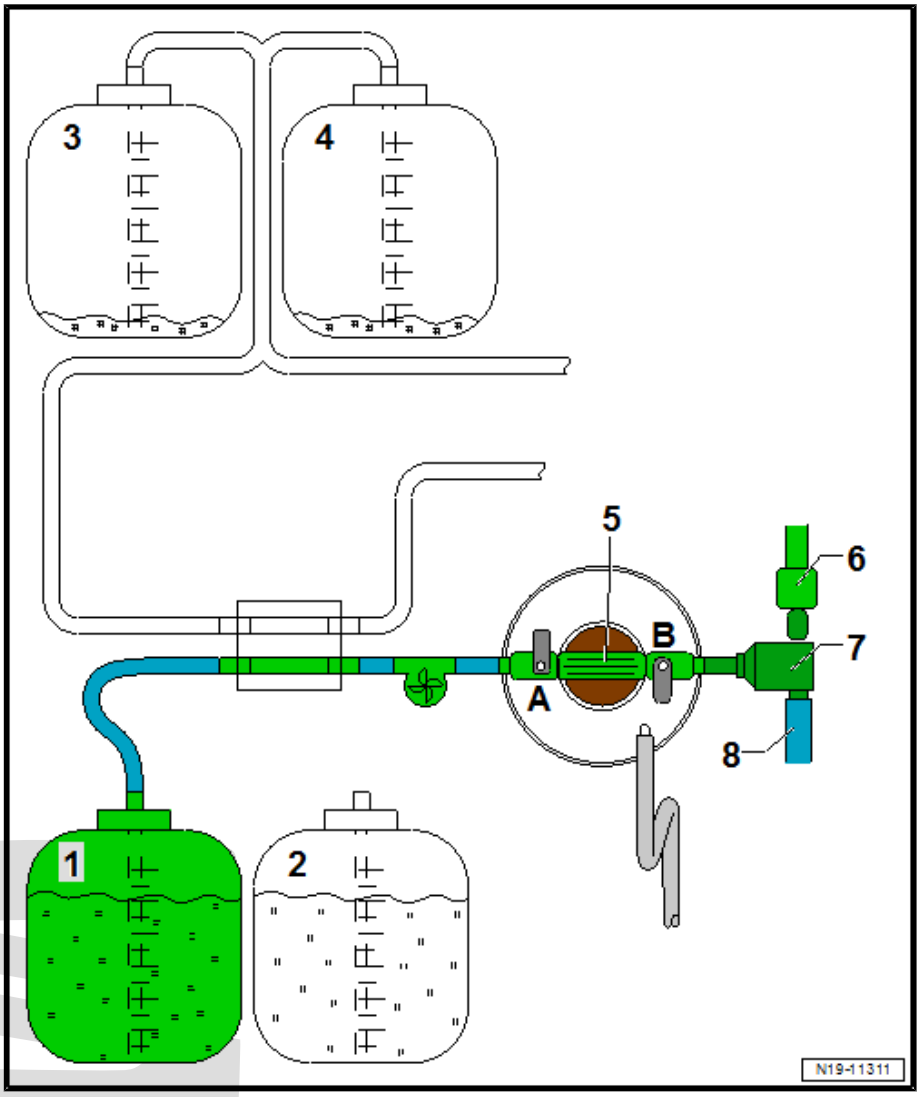

– Place end of vent hose -8- of suction-jet pump into a container.

– Connect compressed air hose -6- to suction-jet pump -7-.

– Open shut-off tap -B- on valve block -5-.

• The suction-jet pump reduces pressure in the cooling system to below atmospheric pressure. The pointer of the pressure gauge must fall to at least -0.85 bar.

– Close shut-off tap -B-.

– Pull off compressed air hose -6-.

– Observe pressure gauge. The pointer of the pressure gauge must remain stationary at -0.85 bar at least. The vacuum in the cooling system is then sufficient for subsequent filling.

Note

♦ *If the vacuum drops, the cooling system must be checked for leaks.*

♦ *The vacuum that builds up depends on the pressure in the compressed air system.*

- The pump of the -VAS 531 007- must be switched on.

– Slowly open shut-off tap -A-.

- The vacuum in the cooling system causes the distilled water to be drawn into the cooling system, and thus causes the cooling system to be filled. In addition, the pump of the -VAS 531 007- feeds distilled water into the coolant expansion tank.

– Fill cooling system until pressure of approx. 1 bar can be read off gauge.

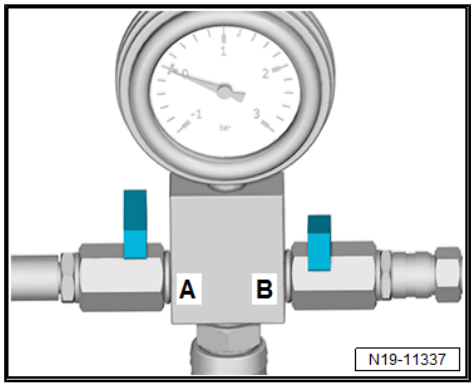

After filling, the pressure in the coolant expansion tank must be released. Proceed as follows to do this:

– Close shut-off tap -A- after filling.

– Remove suction-jet pump -2- from valve block -1- .

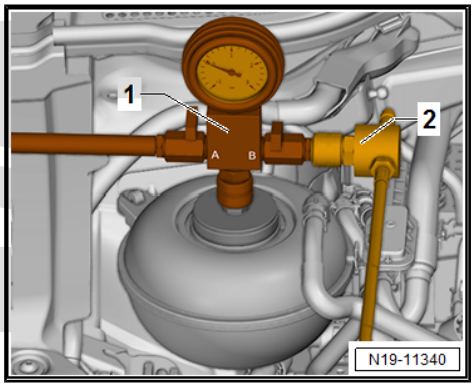

– Connect drain hose -arrow- to plug-in connector. Open shut-off tap -B-, and leave it open so that the pressure in the cooling system releases.

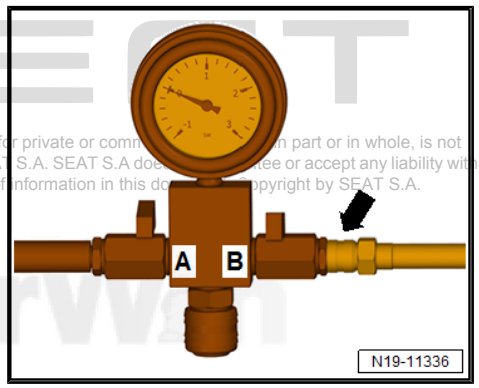

– Remove air filter housing ⇒ page 356 .

– With ignition switched off, release and pull off electrical connector -1- on engine temperature sender - G62- -3-.

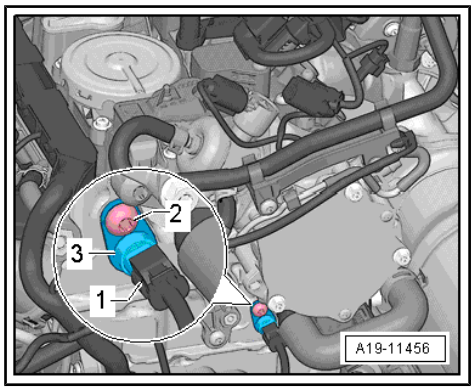

Note

If the connector of the coolant temperature sender - G62- is pulled off, the actuator for engine temperature regulation - N493- will open and the radiator fan will start to operate as soon as the engine is started.

– Temporarily, install air filter housing so that corresponding location on cylinder head remains free. Air filter housing can be placed on battery, for example.

– Start engine and increase speed for approximately 1 minute. Then, switch off engine.

Flushing cooling system with distilled water:

- Shut-off tap -A- is closed; shut-off tap -B- is open.

– Remove breather hose -2- from coolant expansion tank -1-.

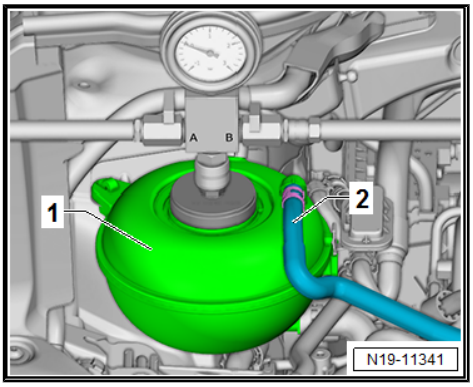

– Connect breather hose -2- from coolant expansion tank to flushing hose -1-.

– Seal connection on coolant expansion tank using plug -3-. Secure plug with a hose clip.

– Close shut-off tap -B-.

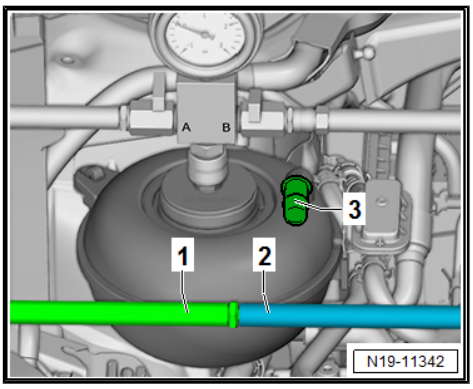

Note

♦ *Flushing of the cooling system will now begin. Please note the fill level of the tanks in order to assure correct flushing capacities.*

♦ *The engine is running at idling speed during the entire flushing process.*

– Start engine and allow to idle.

– Set heater temperature to “HI”.

– Switch off air conditioner compressor. To do this, press AC button.

1 - Flushing cylinder block with distilled water:

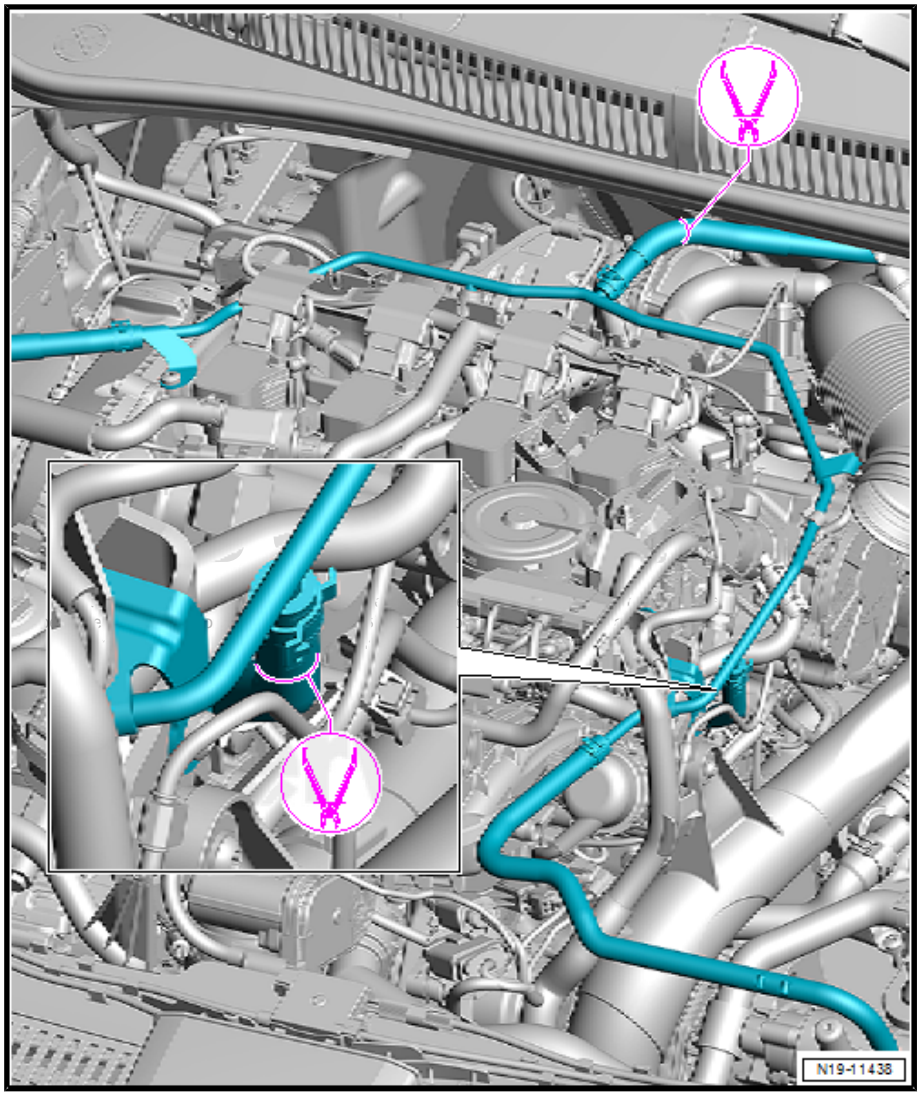

– Clamp off breather hoses for heat exchanger and cylinder head with hose clamps.

– Open shut-off tap -A- on valve block.

• Pump approx. 9 litres of distilled water through engine.

– Close shut-off tap -A-.

2 - Flushing cylinder head with distilled water:

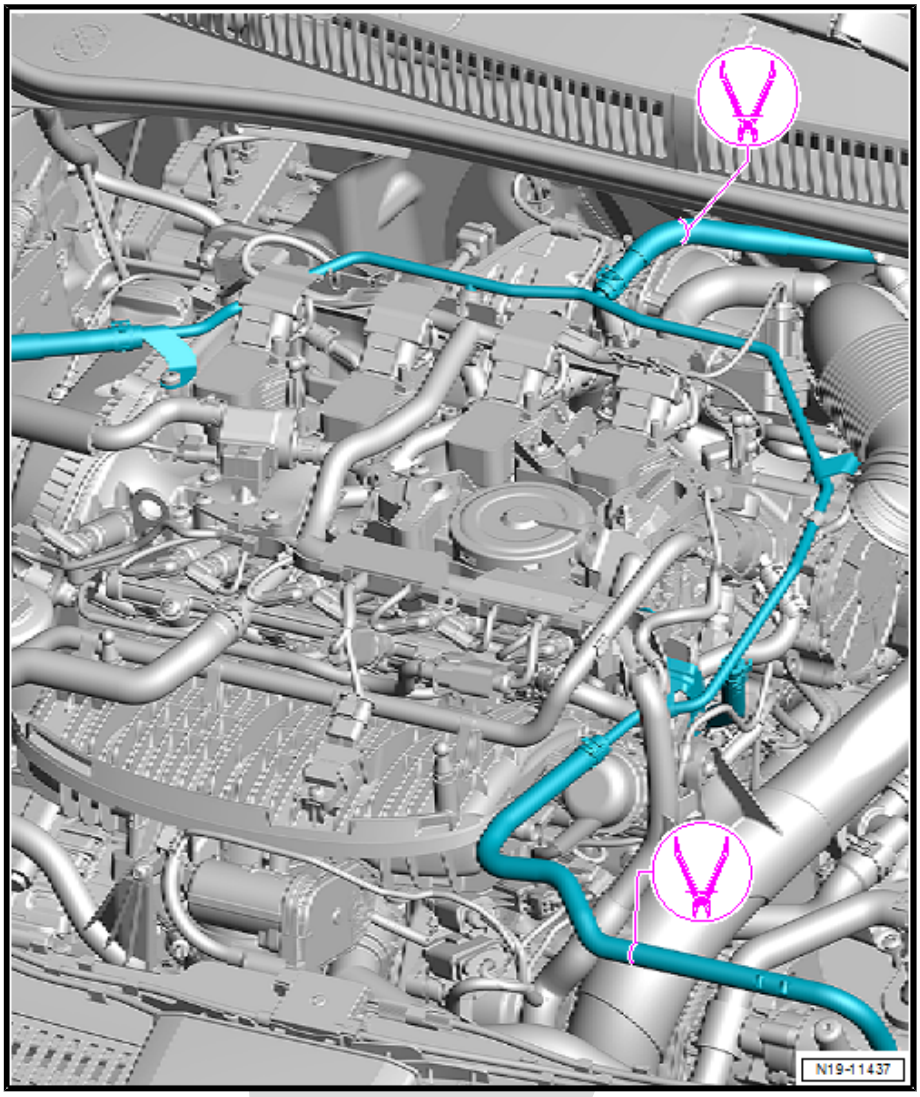

– Clamp off breather hoses for heat exchanger and radiator with hose clamps.

– Open shut-off tap -A- on valve block.

• Pump approx. 2 litres of distilled water through engine.

– Close shut-off tap -A-.

3. Flushing heat exchanger for heater with distilled water:

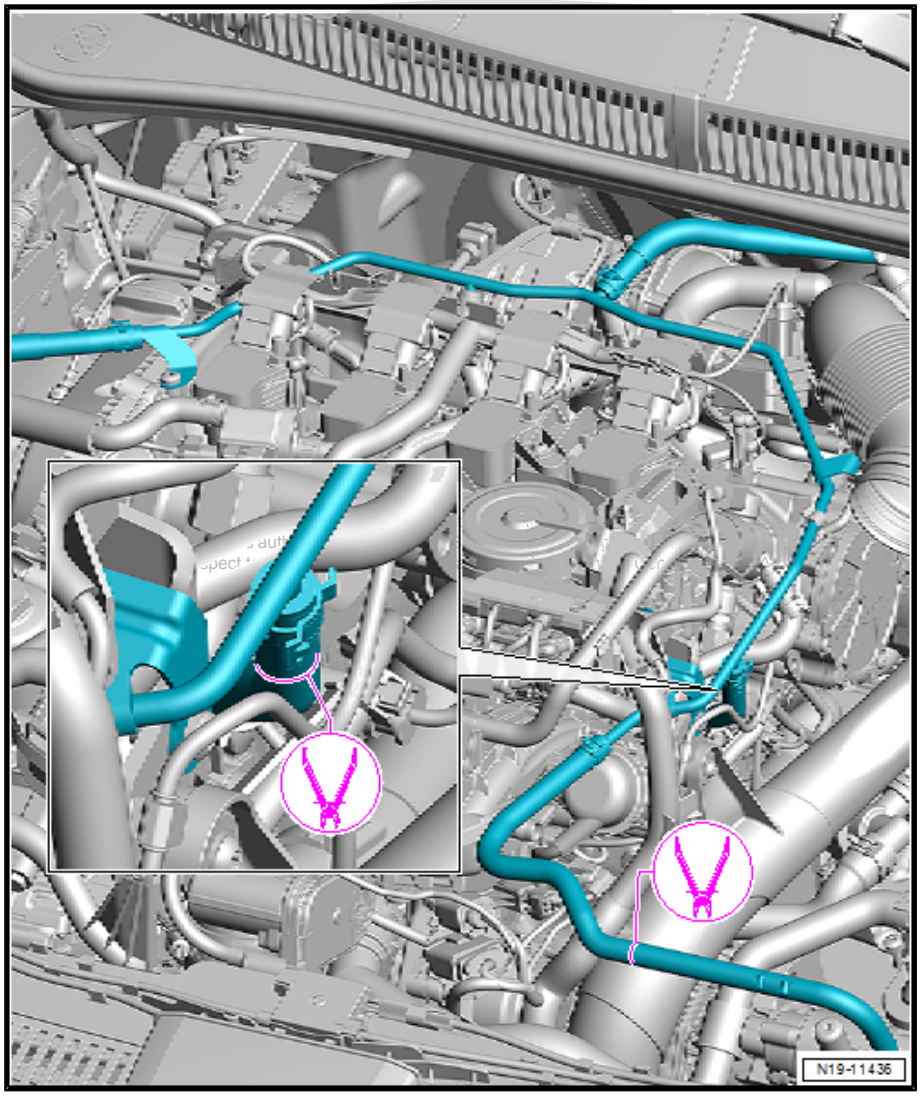

– Clamp off breather hoses for radiator and cylinder head with hose clamps.

– Open shut-off tap -A- on valve block.

• Pump approx. 2 litres of distilled water through engine.

– Close shut-off tap -A-.

4th Flushing entire cooling system

– Remove any hose clamps.

– Open shut-off tap -A- on valve block.

• Pump approx. 6 litres of distilled water through engine.

– Close shut-off tap -A-.

Flushing cooling system with coolant

– Connect suction hose -A- to container -2- for coolant.

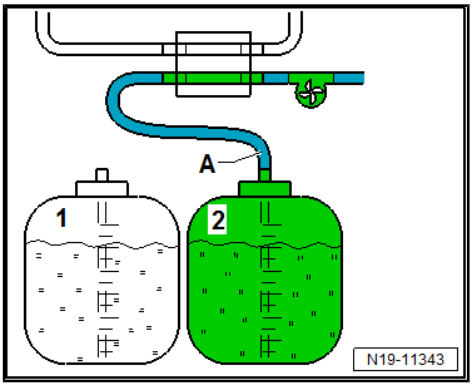

1 - Flushing cylinder block with coolant:

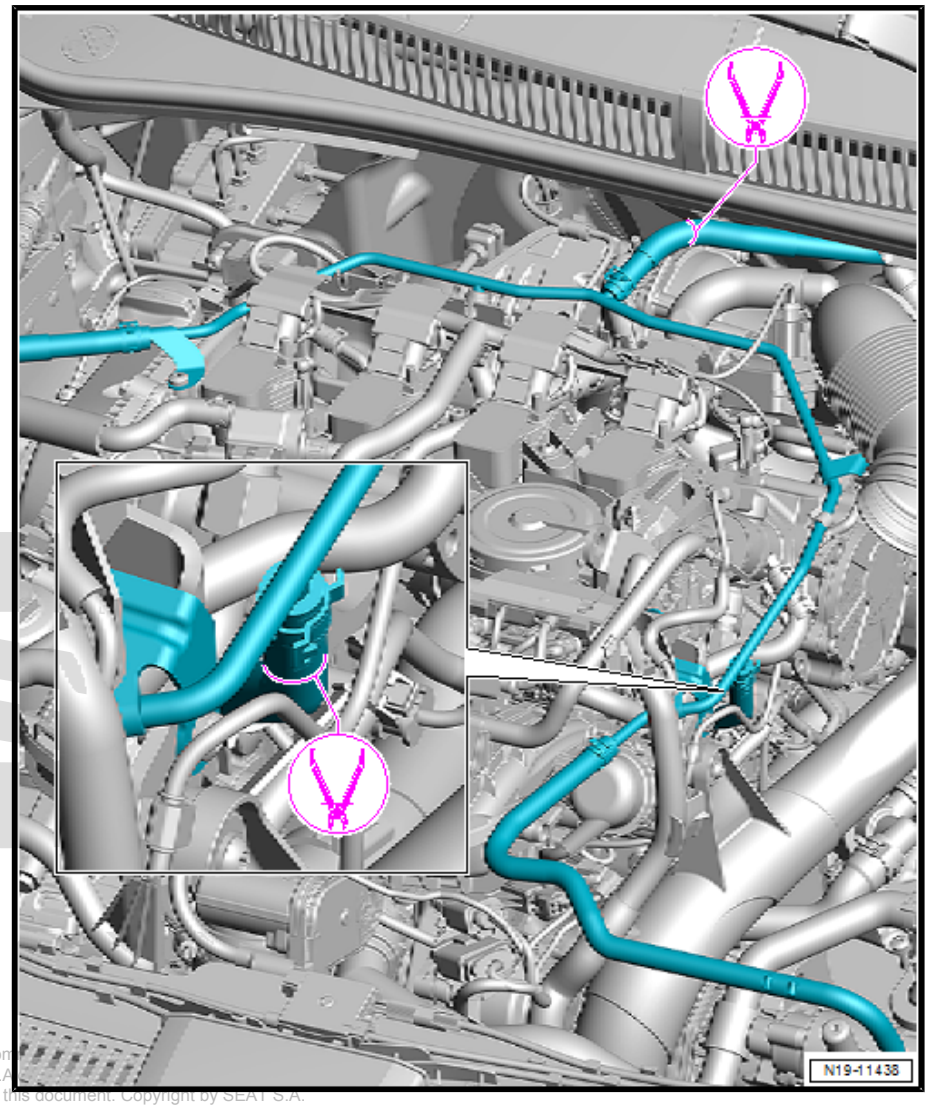

– Clamp off breather hoses for heat exchanger and cylinder head with hose clamps.

– Open shut-off tap -A- on valve block.

• Pump approx. 5 litres of coolant through engine.

– Close shut-off tap -A-.

2 - Flushing cylinder head with coolant:

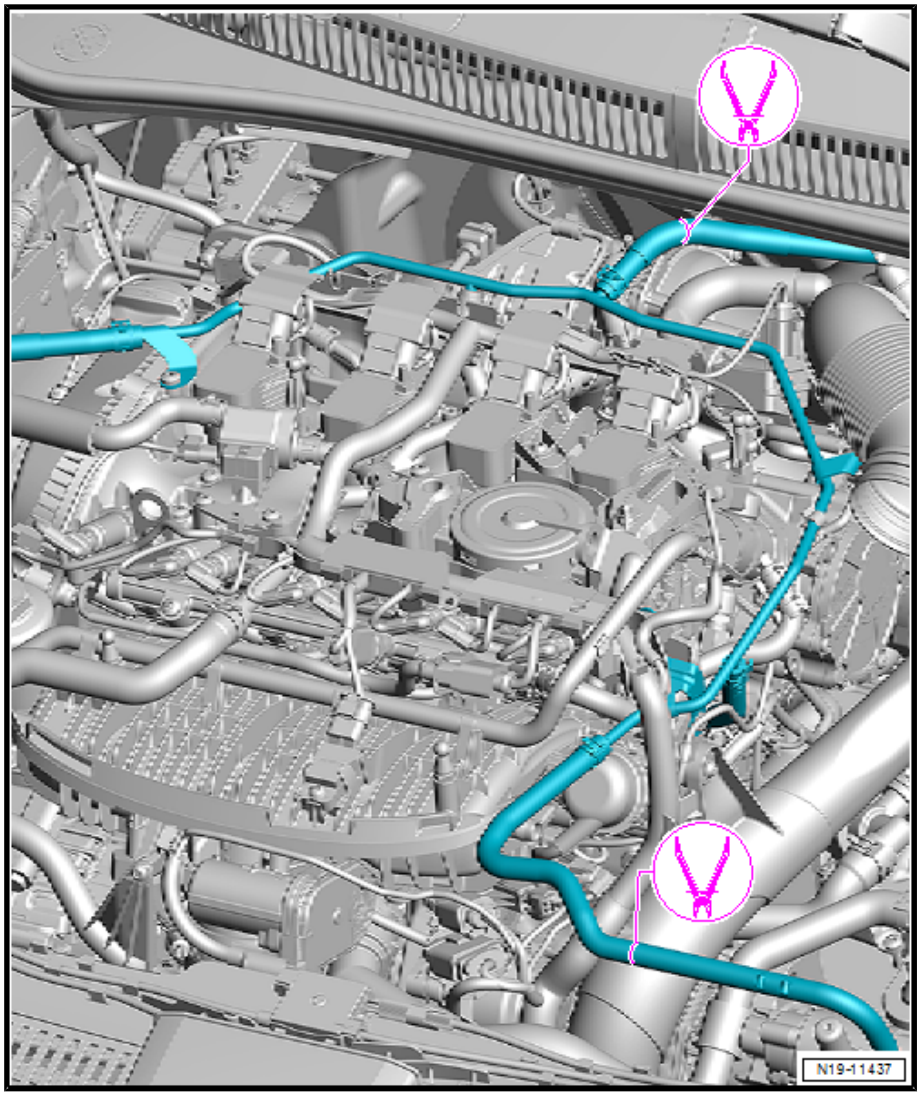

– Clamp off breather hoses for heat exchanger and radiator with hose clamps.

– Open shut-off tap -A- on valve block.

• Pump approx. 5 litres of coolant through engine.

– Close shut-off tap -A-.

3. Flushing heat exchanger for heater with coolant:

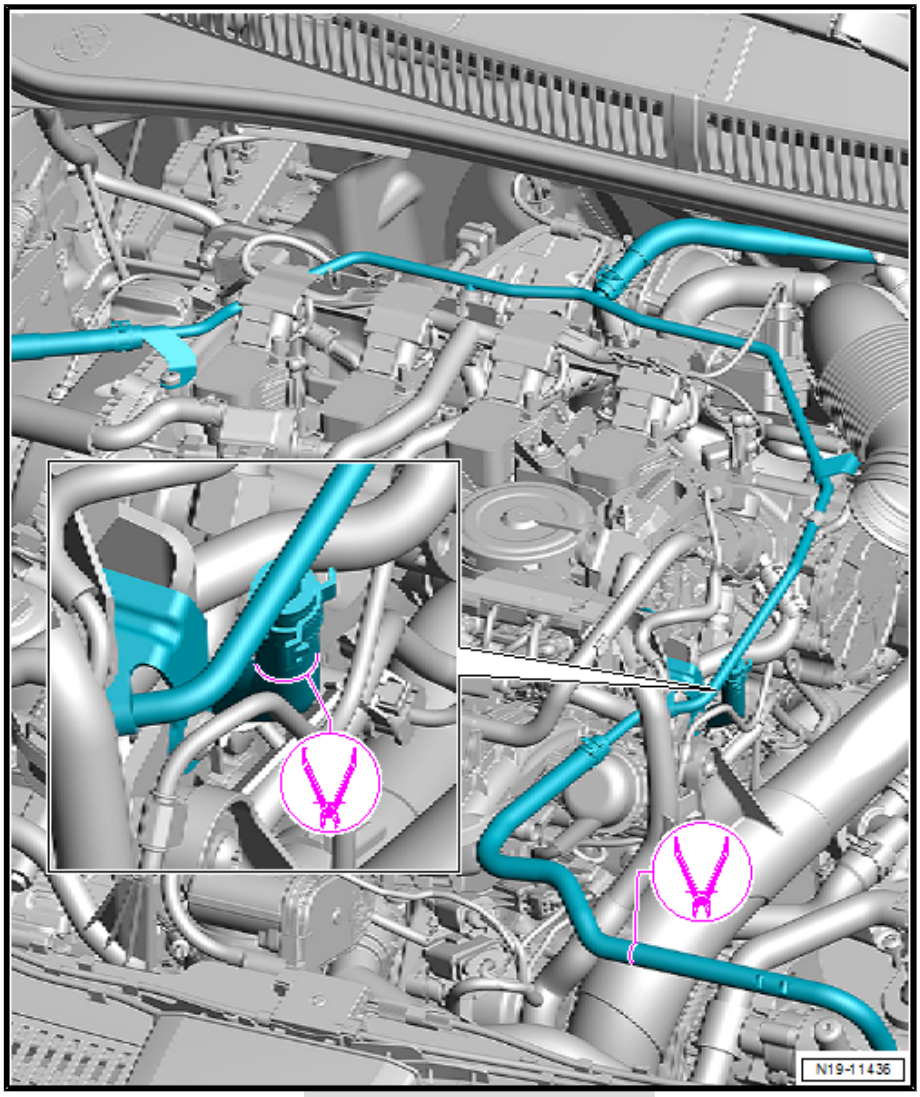

– Clamp off breather hoses for radiator and cylinder head with hose clamps.

– Open shut-off tap -A- on valve block.

• Pump approx. 2 litres of coolant through engine.

– Close shut-off tap -A-.

4th Flushing entire cooling system

– Remove any hose clamps.

– Open shut-off tap -A- on valve block.

• Pump approx. 6 litres of coolant through engine.

– Close shut-off tap -A-.

The flushing process is now completed. Switch off the pump, and switch off the engine.

Removing coolant flushing and filling device - VAS 531 007- :

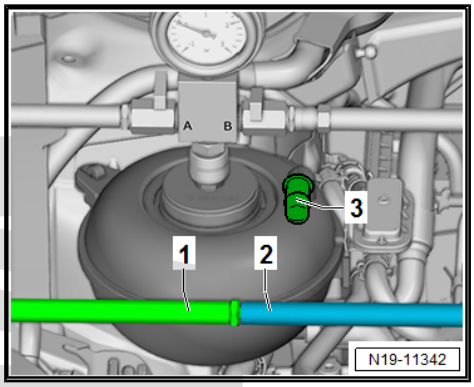

- Open shut-off tap -B-, and leave it open so that the pressure in the cooling system releases.
- Pull plug -3- off coolant expansion tank, and reconnect breather hose -2-.
- Use plug to seal flushing hose -1-.

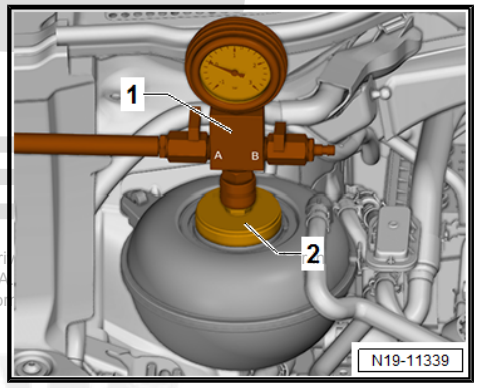

- Remove valve block -1- and test adapter -2-.
- If anti-freeze protection down to approx. -36°C is required, drain coolant expansion tank empty, and fill it with coolant concentrate.

Note

The coolant flushing and filling device - VAS 531 007- can be used for extracting coolant ⇒ page 263 *.*

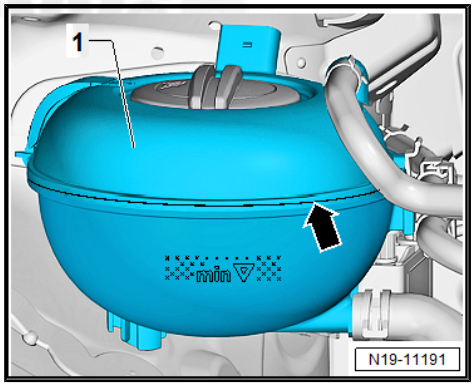

- The coolant level must be at the »weld seam« -arrow-.

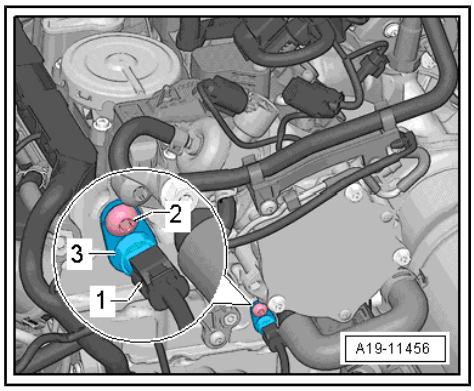

- Reattach electrical connector -1- on coolant temperature sender - G62- -3-.
- Install air filter housing at its final installation position.
- Separating the connectors caused entries to be stored in the event memory of the engine control unit. Clear event memory ⇒ Vehicle diagnostic tester.
- Tighten cap of coolant expansion tank until it engages.
- Then run engine at idling speed until radiator fan cuts in.

Check coolant level and frost protection

- If the frost protection is not sufficient, extract coolant from coolant expansion tank. Set correct frost protection by filling more coolant concentrate.
- After each time coolant concentrate has been filled, run engine at increased engine speed for about 2 minutes, and check frost protection again.

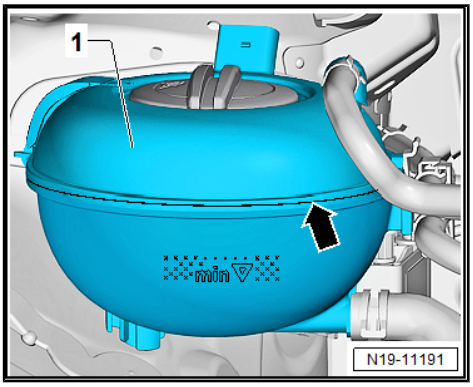

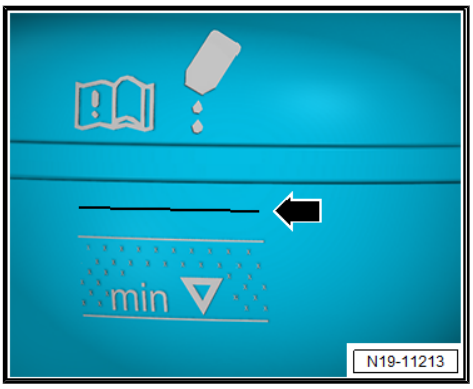

- The frost protection must be effective down to at least -25 °C, and approx. -36 °C in cold countries. The effectiveness of the frost protection may only be increased if a higher level of frost protection is required due to the climate. But only to -48 °C. Otherwise, the cooling effect of the coolant will be impaired.
- When the engine is at operating temperature, the coolant level must be at the »weld seam« -arrow-.
- When the engine is cold, the coolant level must be approx. 5 mm above the max. mark -arrow-.

Note

This excessive amount of coolant level is necessary since the coolant level may decrease automatically due to bleeding process.

Extracting coolant:

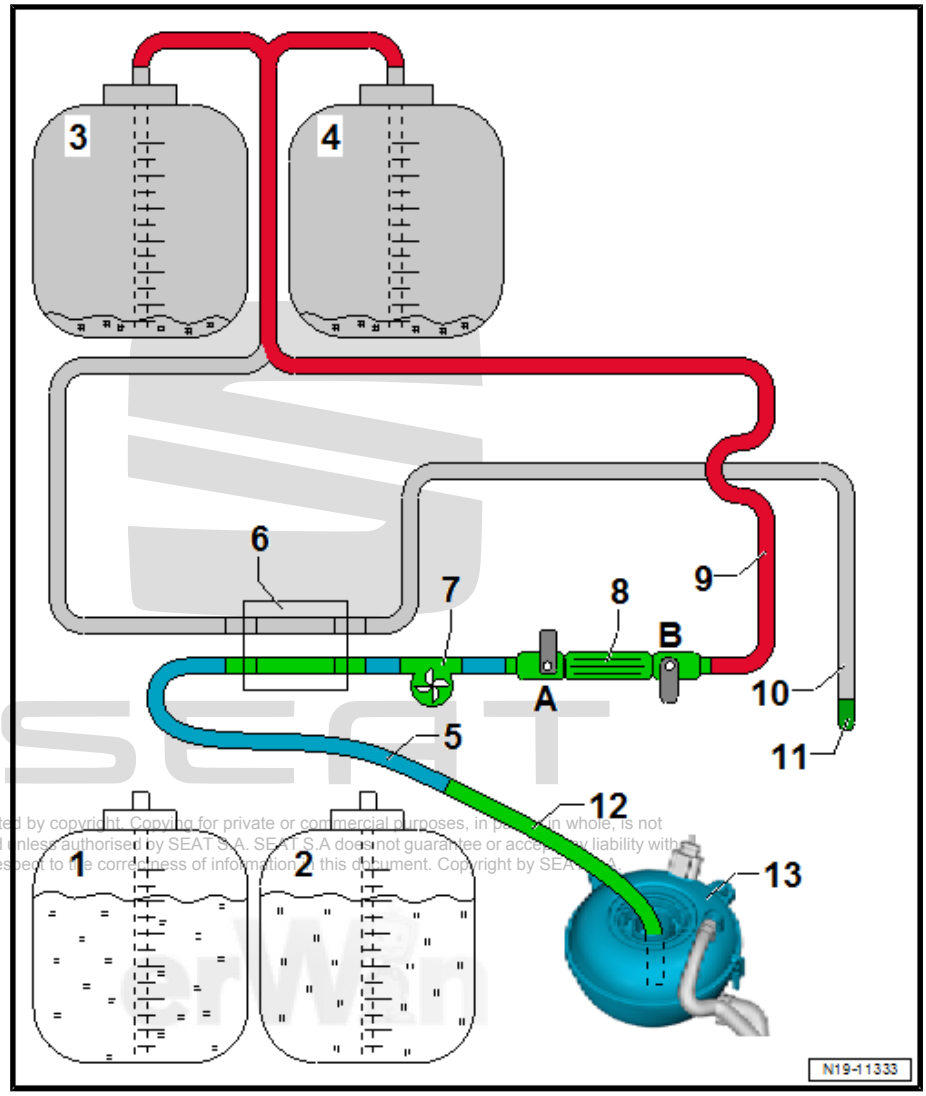

Note

Use the extraction adapter ⇒ Item 14 (page 249) (14) for extracting the coolant.

- Detach suction hose -5- from container -2-.
- Fit extraction adapter -12- onto plug-in connector of suction hose -5-.
- Switch on pump -7-, and open shut-off taps -A- and -B- on valve block -8-.
- Use extraction adapter -12- to extract any excess coolant.
- Close shut-off taps on valve block, and switch off pump.

Cleaning coolant flushing and filling device - VAS 531 007- :

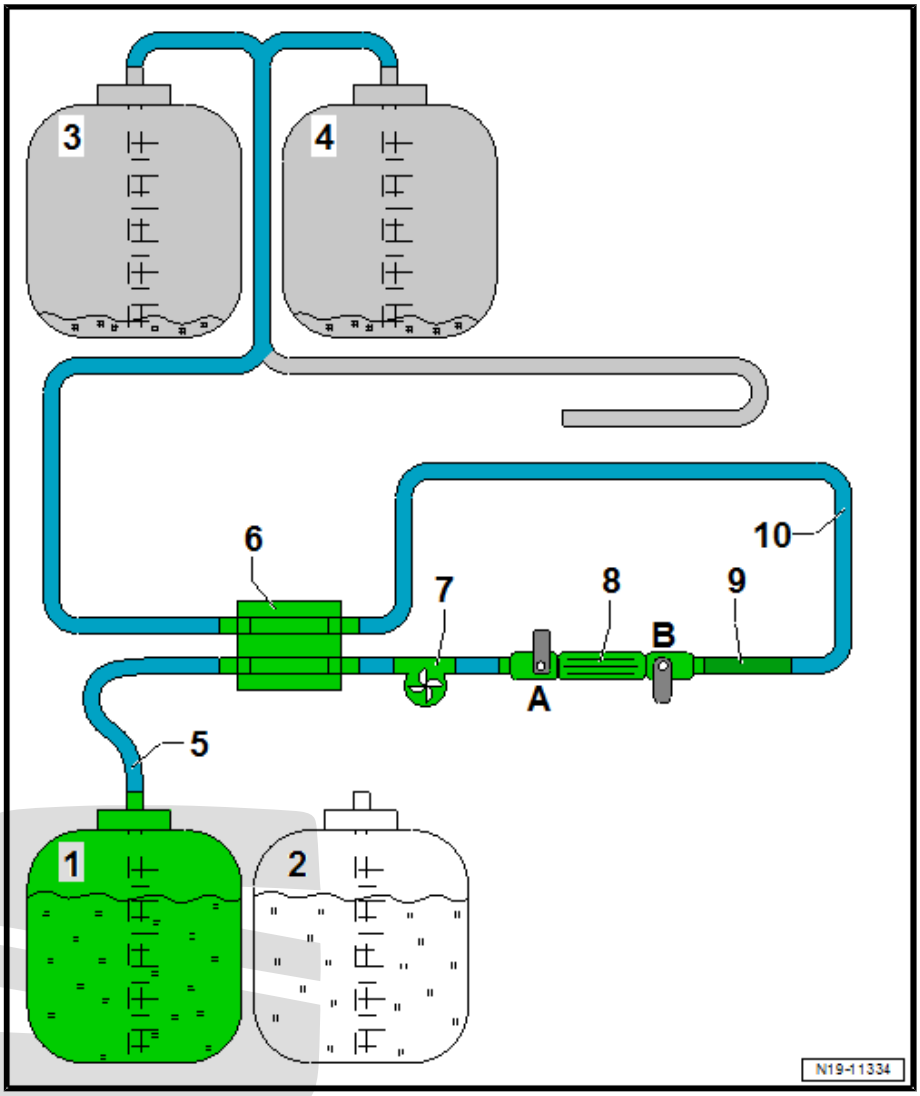

Note

- *If coolant remains in the sight glass for longer periods of time, the sight glass may become opaque. Therefore, the sight glass must be flushed with distilled water after the flushing procedure has been completed.*
- *If the sight glass is opaque, clean it with a nylon brush.*
- *Use cleaning adapter* *⇒ Item 13 (page 249)* *(13) for flushing.*

– Connect suction hose -5- to container -1- for distilled water.
– Fit flushing hose -10- onto cleaning adapter -9-. Fit cleaning adapter -9- to plug-in connector -B- on valve block -8-.
– Open shut-off valves -A- and -B- on valve block -8-.
– Switch on pump -7-, and pump distilled water through hoses until coolant has been flushed out of sight glass -6-.
– Switch off pump, and close shut-off taps.
– Remove cleaning adapter, and seal flushing hose with plug.

1.5 Flushing cooling system, quick reference guide

Note

The quick reference guide contains the basic steps of the workflow. It might be helpful to print out the guide and tick off the corresponding work steps after having performed them. For a detailed description of the necessary work steps, refer to *⇒ "1.4 Flushing cooling system", page 247* .

Step	Measure	Volume of flushing medium
1	Draining coolant	---
2	Fill cooling system with distilled water	---
3	Pull connector off coolant temperature sender - G62-	---
4	Run engine at idling speed	---
5	Clamp off breather hose for heat exchanger -1- and cylinder head -2-; flush cooling system	9 l of distilled water
6	Clamp off breather hose for heat exchanger -1- and radiator -3-; flush cooling system	2 l of distilled water
7	Clamp off breather hose for cylinder head -2- and radiator -3-; flush cooling system	2 l of distilled water
8	Remove all clamps; flush cooling system	6 l of distilled water
9	Clamp off breather hose for heat exchanger -1- and cylinder head -2-; flush cooling system	5 l of coolant
10	Clamp off breather hose for heat exchanger -1- and radiator -3-; flush cooling system	5 l of coolant
11	Clamp off breather hose for cylinder head -2- and radiator -3-; flush cooling system	2 l of coolant
12	Remove all clamps; flush cooling system	6 l of coolant
13	Switch off engine	---
14	Drain coolant expansion tank empty, and fill with coolant concentrate	---
15	Fit connector of coolant temperature sender - G62-	---
16	Run engine until radiator fan starts to operate.	---
17	Checking frost protection	---

1 - Breather hose of heat exchanger for heater unit

2 - Breather hose for cylinder head

3 - Breather hose of radiator for engine coolant

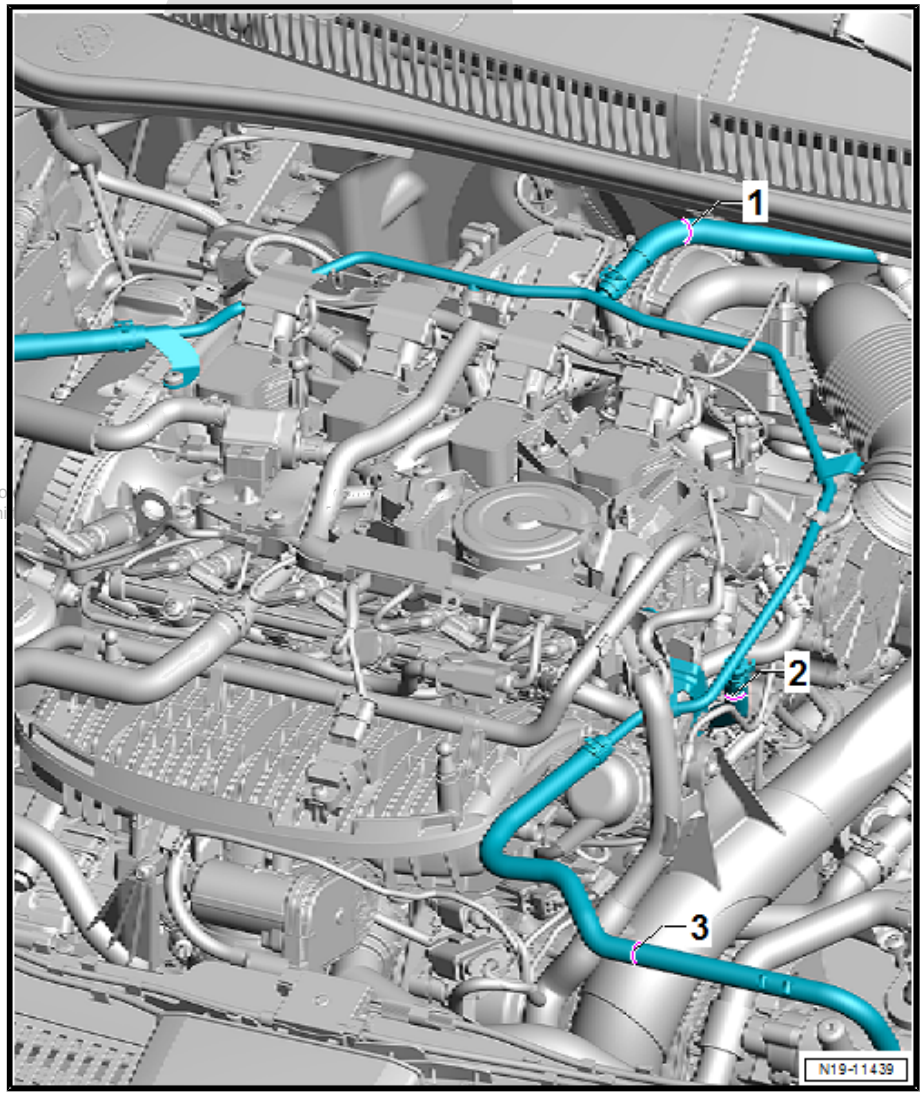

2 Coolant pump/thermostat assembly

2.1 Exploded view - coolant pump and thermostat

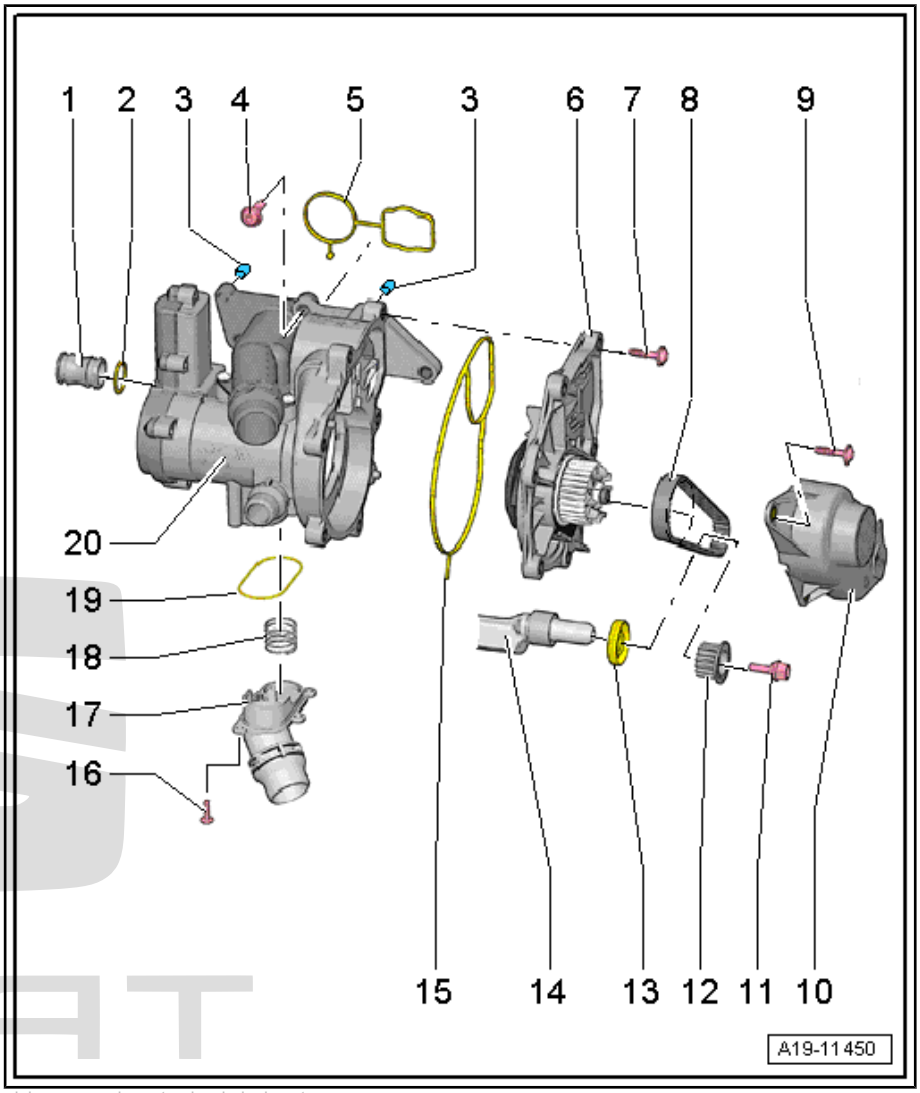

1 - Connecting piece

2 - O-ring
- ❑ Renew
- ❑ Lubricate with coolant

3 - Centralising pin

4 - Bolt
- ❑ Tightening torque and sequence ⇒ page 270

5 - Gasket
- ❑ Renew

6 - Coolant pump
- ❑ Removing and fitting ⇒ page 276
- ❑ New coolant pump: remove protective cap

7 - Bolt
- ❑ Tightening sequence ⇒ page 270

8 - Notched belt
- ❑ For coolant pump
- ❑ Removing and fitting ⇒ page 273

9 - Bolt
- ❑ 9 Nm

10 - Toothed belt guard

11 - Bolt
- ❑ Left-hand thread
- ❑ Renew
- ❑ 10 Nm + turn +90° further

12 - Ribbed belt drive pinion
- ❑ Observe installation position

13 - Oil seal for balance shaft (inlet side)
- ❑ Replace ⇒ page 92

14 - Balancing shaft

15 - Gasket
- ❑ Renew

16 - Bolt
- ❑ 9 Nm

17 - Connection

18 - Spring

19 - Gasket
- ❑ Renew

20 - Actuator for engine temperature regulation - N493-
- ❑ Removing and fitting ⇒ page 282

Actuator for engine temperature regulation - N493- - tightening torque and sequence

– Tighten bolts to 9 Nm in sequence -1 ... 5-.

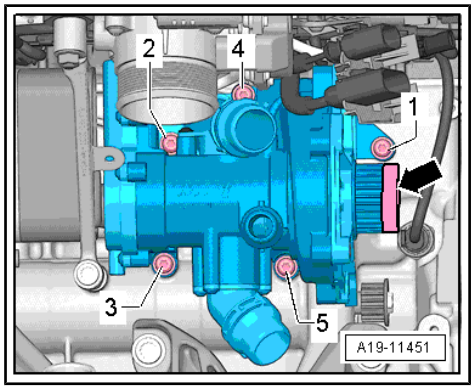

Coolant pump - tightening torque and sequence

– Tighten bolts for coolant pump in the sequence -1 ... 4- to 9 Nm.

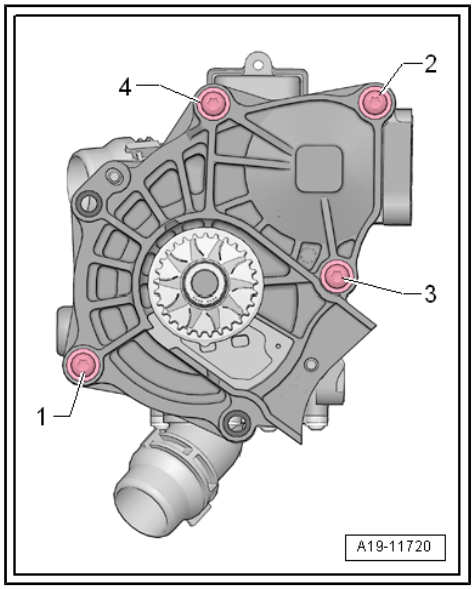

2.2 Exploded view - electric coolant pump

⇒ “2.2.1 Auxiliary pump for heating V488 , coolant shut-off valve N82 ”, page 270

⇒ “2.2.2 Coolant valve for gearbox N488 , vehicles with dual clutch gearbox”, page 272

2.2.1 Auxiliary pump for heating - V488- , coolant shut-off valve - N82-

1 - Coolant hose

2 - Coolant shut-off valve - N82-

- ❑ Removing and fitting ⇒ page 278

3 - Auxiliary pump for heating - V488-

- ❑ With holder
- ❑ Removing and fitting ⇒ page 277

4 - Support plate

- ❑ For auxiliary pump for heating - V488-

5 - Bolt

- ❑ 20 Nm

6 - Hook

7 - Coolant hoses

8 - Coolant hose

9 - Bolt

- ❑ 9 Nm

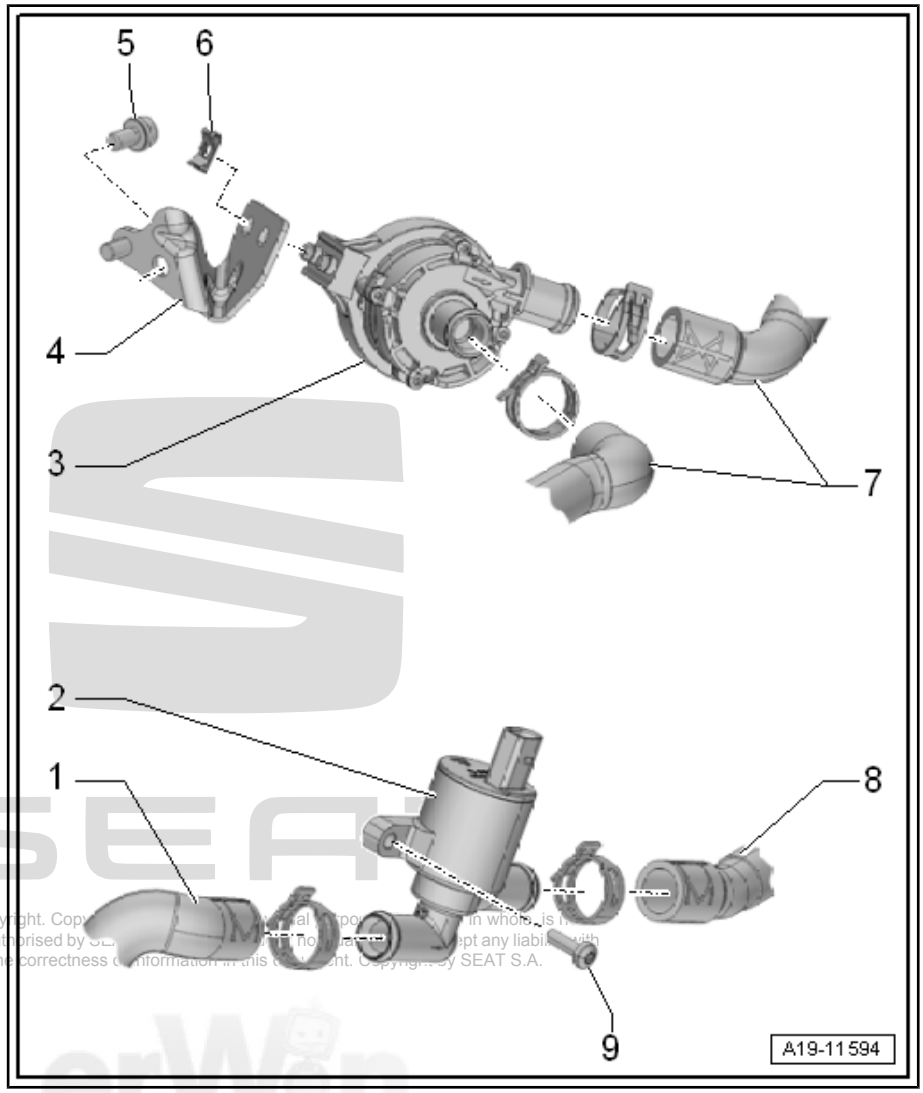

2.2.2 Coolant valve for gearbox - N488- , vehicles with dual clutch gearbox

1 - Bolt
- ❑ 9 Nm

2 - Coolant hose

3 - Nut
- ❑ 9 Nm

4 - Coolant hose

5 - Coolant valve for gearbox - N488-
- ❑ Removing and fitting ⇒ page 280

6 - Support plate
- ❑ For coolant valve for gearbox - N488-

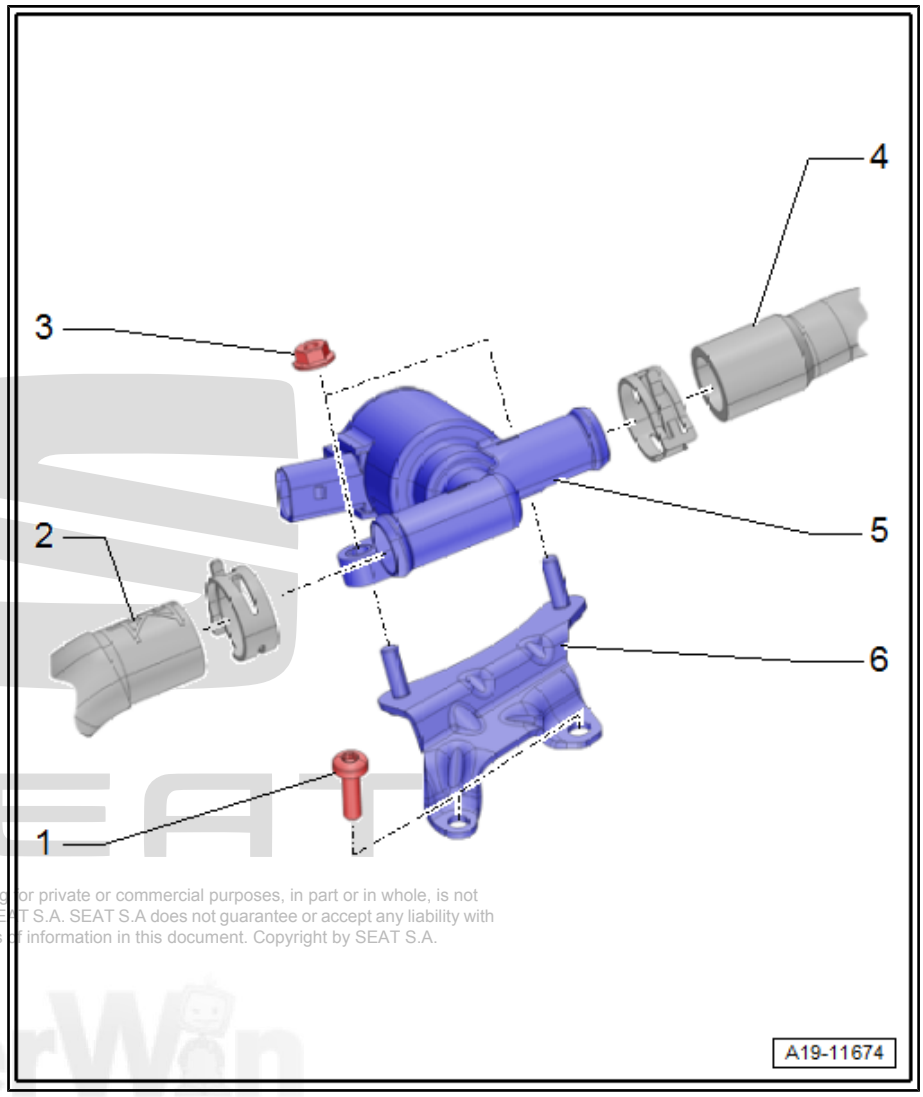

2.3 Exploded view - coolant temperature sensors

1 - Retaining clip
- ❑ Ensure correct seating

2 - O-ring
- ❑ Renew

3 - Coolant temperature sender at the radiator outlet - G83-
- ❑ Removing and fitting ⇒ page 285

4 - Electric connector

5 - Coolant temperature sensor - G62-
- ❑ On cylinder head (gearbox end)
- ❑ Removing and fitting ⇒ page 284

6 - O-ring
- ❑ Renew
- ❑ Lubricate with coolant

7 - O-ring
- ❑ Renew
- ❑ Lubricate with coolant

8 - Bolt
- ❑ Renew
- ❑ 4 Nm +45°

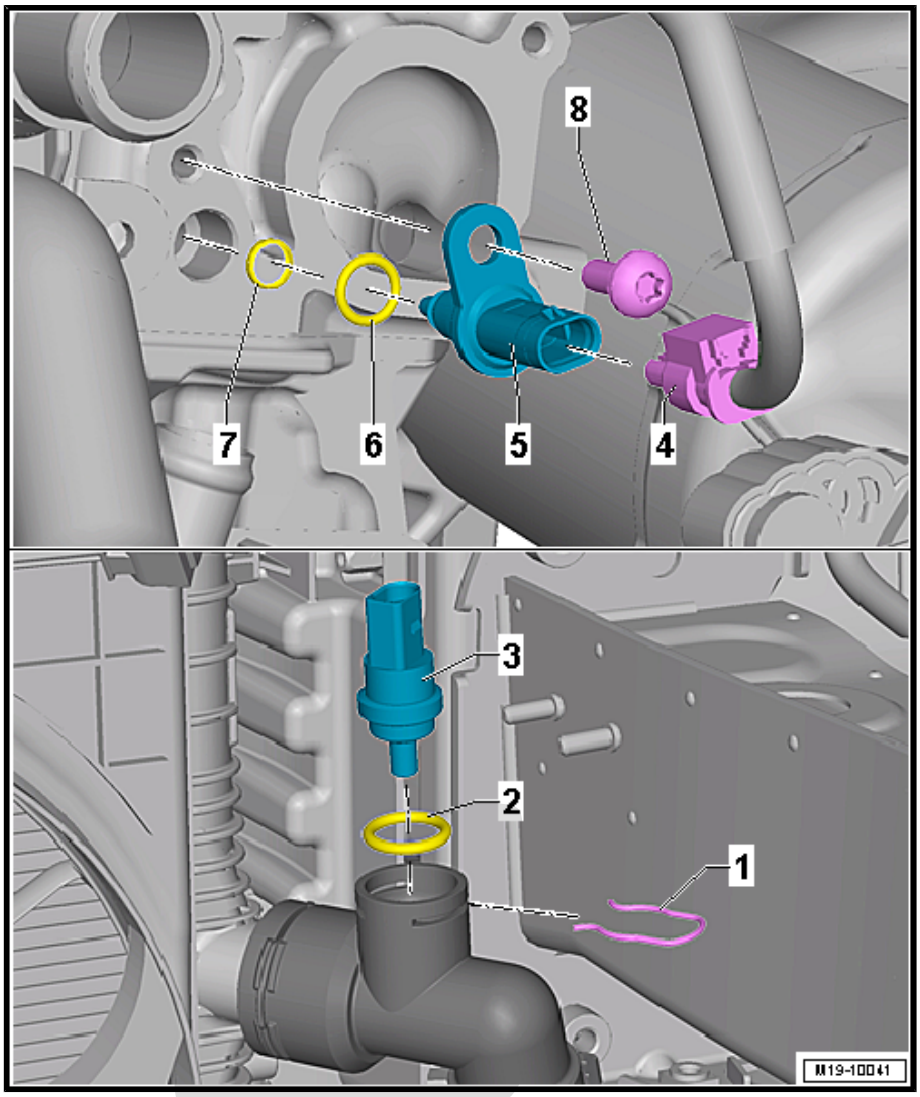

2.4 Removing and installing toothed belt for coolant pump

Special tools and workshop equipment required

- ♦ Tool insert - T10360-

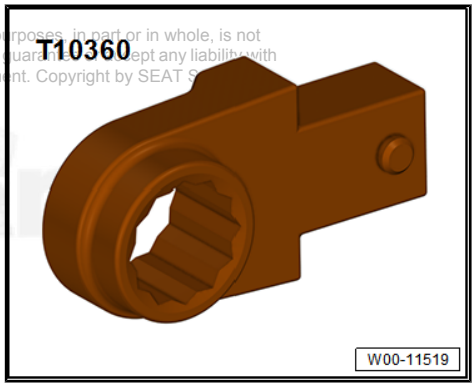

Removing

– Drain coolant ⇒ page 239 .

– Release hose clip -1- and detach air hose from charge air cooler.

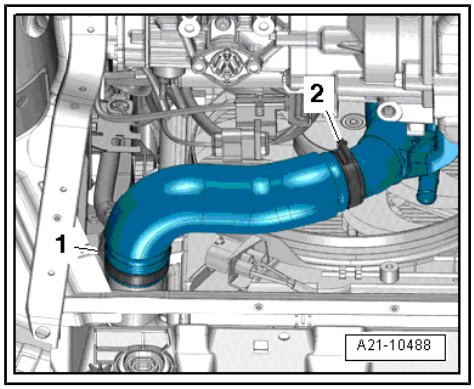

Note

Item -2- can be disregarded.

– Remove air filter housing ⇒ page 356 .

– Vehicles with auxiliary radiator (left-side): Move coolant hose -3- clear.

– Move electrical wiring harnesses -1, 2- clear at air pipe.

– Unfasten screw-type clip -4-.

– Unscrew bolts -arrows- and detach air pipe.

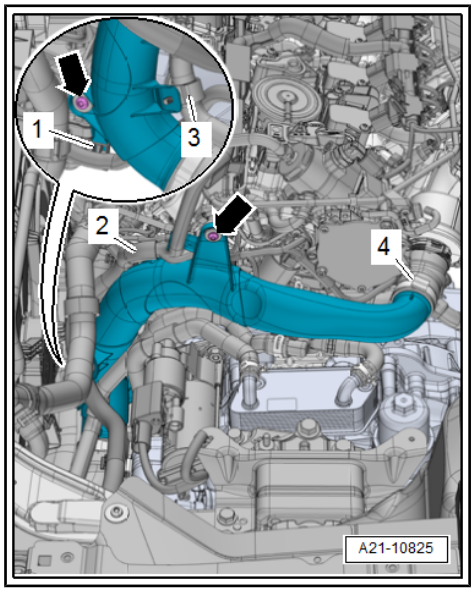

– Free coolant hose -2-.

– Remove bolts -arrows-.

– Release the air deflector -1- in the lock carrier and pull it out in the -direction of the arrow-.

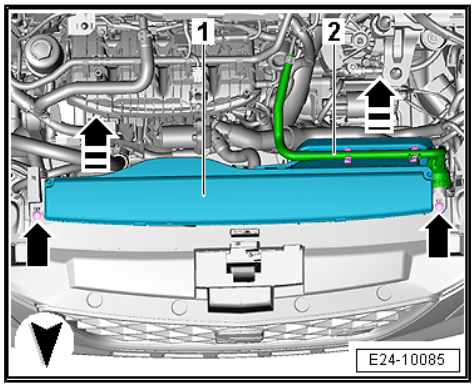

– Lift retaining clip -1-, detach upper coolant connection and press to side.

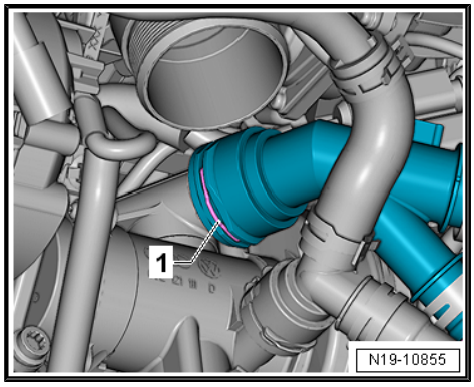

– Unplug electrical connector -1- on stage 3 oil pressure switch - F447- -item 2-.

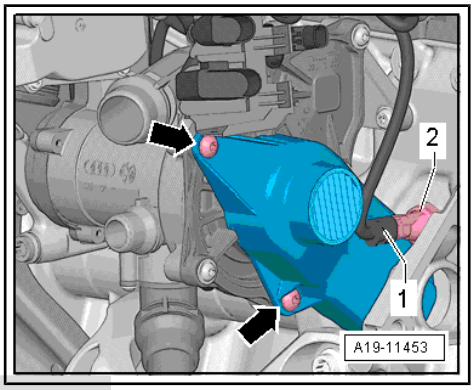

– Remove bolts -arrows- and detach toothed belt cover.

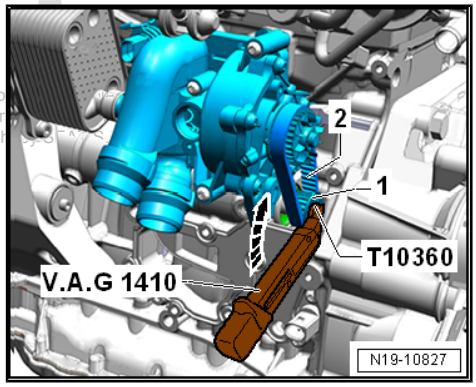

Note

The drive sprocket bolt has a left-hand thread.

– Use torque wrench - V.A.G 1410- and insert tool - T10360- to loosen bolt on coolant pump drive sprocket -1- and unscrew three turns (counterhold at vibration damper).

Note

If for vehicles with manual gearboxes, the tool cannot be placed on due to a fastening screw of the starter, unscrew screw approx. 15 mm.

– Remove toothed belt -2-.

Fitting

Installation is carried out in the reverse order; note the following:

Note

- *Replace the drive sprocket bolt.*
- *Note installation position of toothed belt sprocket* *⇒ Item 12 (page 269)* .

– Replenish coolant ⇒ page 240 .

Specified torques

- ⇒ “2.1 Exploded view - coolant pump and thermostat”, page 268
- ⇒ “3.1 Exploded view - air cleaner housing”, page 355

2.5 Removing and replacing coolant pump

Removing

– Remove toothed belt for coolant pump ⇒ page 273 .

– Remove the throttle control unit ⇒ page 365 .

– Disconnect electrical connectors -2, 3 and 4-. Remove fastening bolts -1- and move bracket to one side.

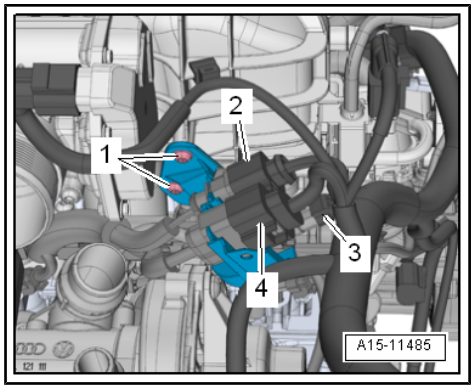

– Remove bolts -1 … 4- and detach coolant pump from actuator for engine temperature regulation - N493- .

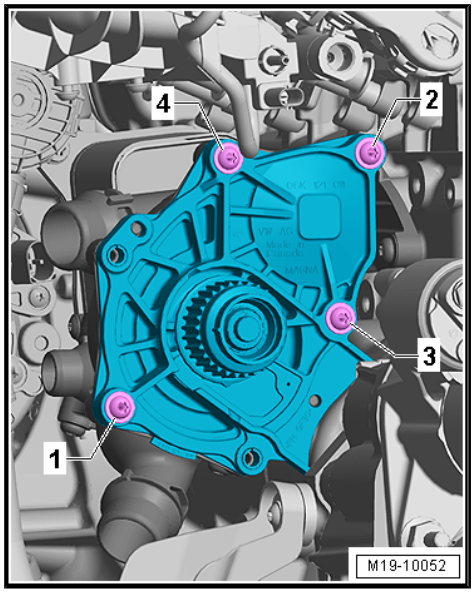

Fitting

Install in the reverse order of removal, observing the following:

– Fit coolant pump and placed toothed belt in position.

– Ensure that centring pins -arrows- and seal -3- are seated correctly.

– Tighten coolant pump bolts ⇒ page 270 .

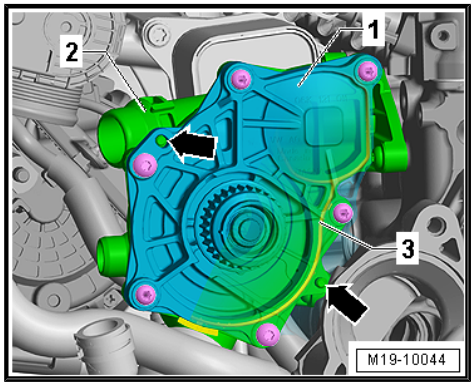

– After mounting a new coolant pump -2- remove protective cap -1- from drive sprocket.

– Replenish coolant ⇒ page 240 .

Specified torques

♦ ⇒ “2.1 Exploded view - coolant pump and thermostat”, page 268

♦ ⇒ “3.1 Exploded view - air cleaner housing”, page 355

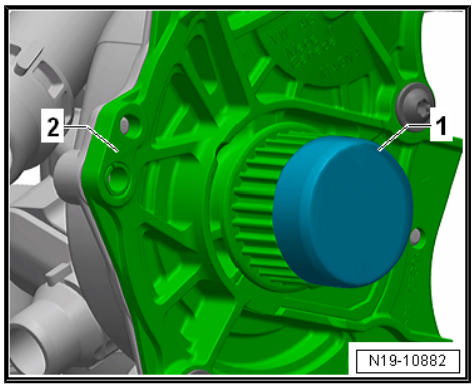

2.6 Removing and installing electric coolant pump

Special tools and workshop equipment required

- Hose clamps, up to Ø 25 mm - 3094-

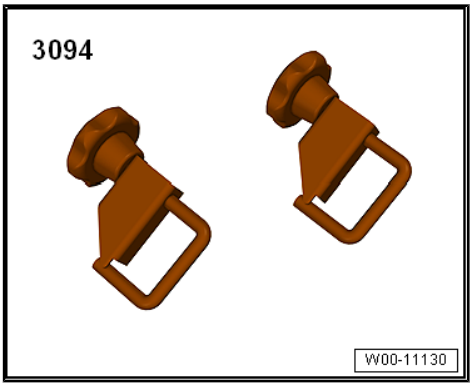

- Hose clip pliers - VAS 6340-

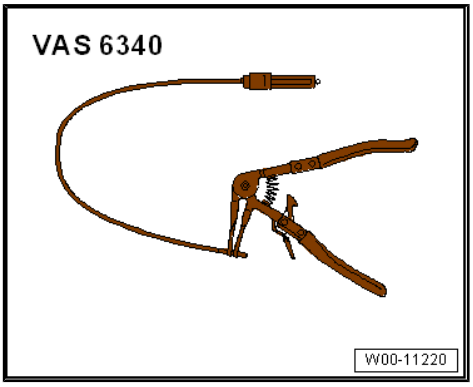

- Hose clip pliers - VAS 6362-

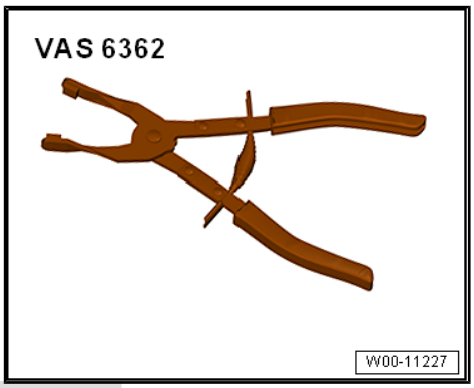

Removing

Note

Re-install all heat insulation sleeves in the same locations when installing.

CAUTION

On a warm engine, the cooling system is under high pressure. Hot steam/hot coolant can escape - risk of scalding.

Risk of scalding to skin and body parts.

- **Wear protection gloves.**
- **Wear safety goggles.**
- **Reduce excess pressure by covering cap of coolant expansion tank with cloths and opening it carefully.**

– Open filler cap -arrow- on coolant expansion tank.

– Remove noise insulation ⇒ General body repairs, exterior; Rep. gr. 66 ; Noise insulation; Assembly overview - noise insulation .

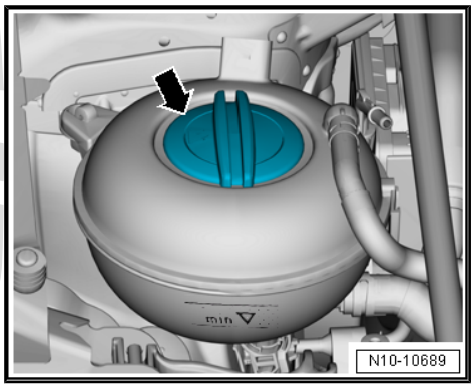

– Open heat insulation sleeve -3-.

– Unplug connector -1-.

– Disconnect the coolant hose on the auxiliary pump for heating - 3094- with terminals -V488- .

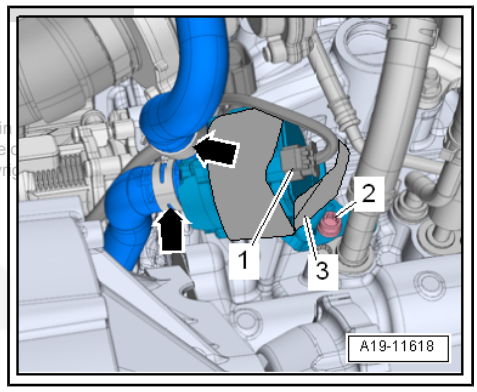

Note

Place a cloth underneath to catch escaping coolant.

– Release hose clips -arrows- and detach coolant hoses.

– Remove screw -2- and remove the auxiliary pump for heating - V488- .

Fitting

Install in the reverse order of removal, observing the following:

Note

Secure all hose connections with the correct type of hose clips (same as original equipment) ⇒ Electronic parts catalogue (ETKA) .

– Check coolant level ⇒ page 244 .

Specified torques

- ⇒ “2.2 Exploded view - electric coolant pump”, page 270
- Assembly overview - noise insulation ⇒ General body repairs, exterior; Rep. gr. 66 ; Noise insulation; Assembly overview - noise insulation .

2.7 Removing and installing coolant shut-off valve - N82-

Special tools and workshop equipment required

- Hose clamps, up to Ø 25 mm - 3094-

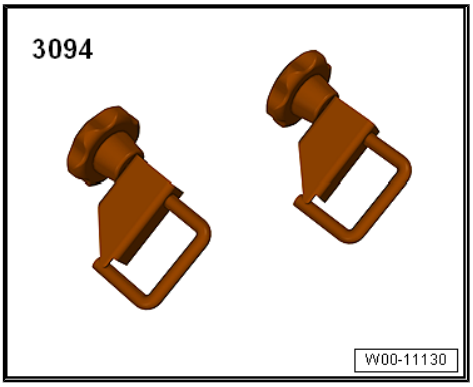

- Hose clip pliers - VAS 6362-

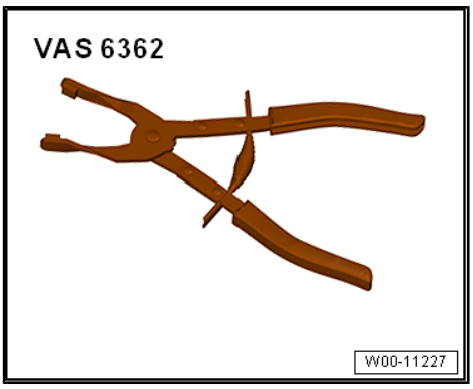

Removing

– Remove air filter housing ⇒ page 356 .
– Release the hose clamp -2-.
– Remove bolt -1- and press air pipe (left-side) towards left slightly.

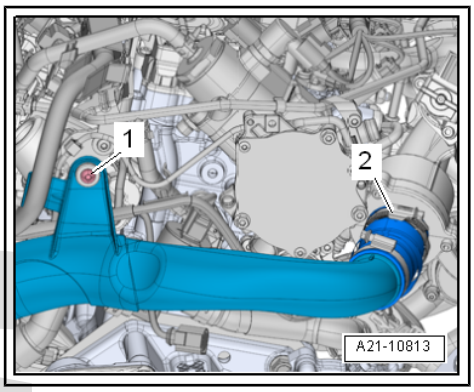

– Pull off connector -2-.

– Use hose clamps -N82- to clamp off coolant hoses on coolant shut-off valve - 3094- .

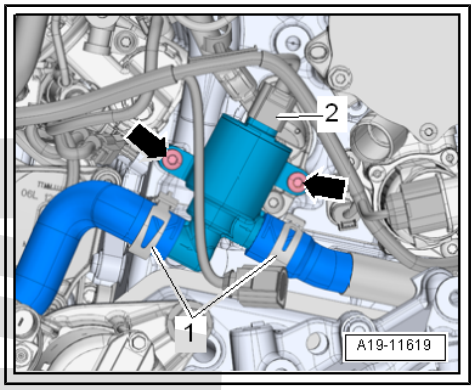

Note

Place a cloth underneath to catch escaping coolant.

– Release hose clips -1- and disconnect coolant hoses.

– Unscrew bolt -arrows- and detach coolant shut-off valve - N82- .

Fitting

Install in the reverse order of removal, observing the following:

Note

Secure all hose connections with the correct type of hose clips (same as original equipment) ⇒ Electronic parts catalogue (ET-KA) .

– Check coolant level ⇒ page 244 .

Specified torques

- ⇒ “2.2 Exploded view - electric coolant pump”, page 270
- ⇒ “3.1 Exploded view - air cleaner housing”, page 355

2.8 Removing and installing coolant valve for gearbox - N488- , vehicles with dual clutch gearbox

Special tools and workshop equipment required

- Hose clamps to Ø 25 mm - 3094-

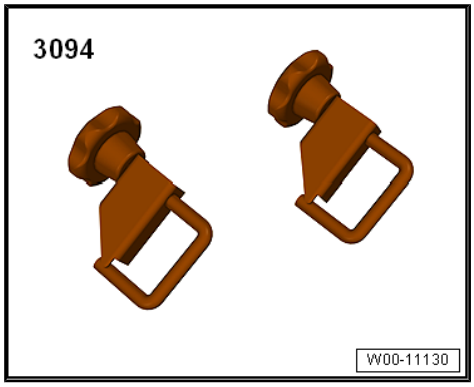

♦ Hose clip pliers - VAS 6362-

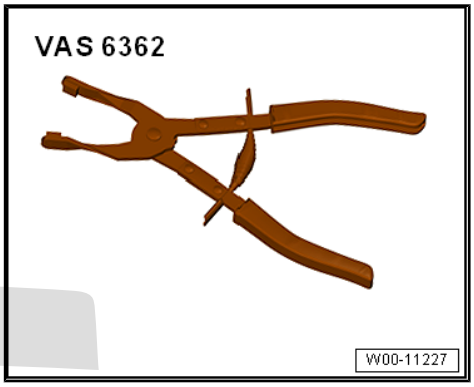

Removing

– Remove noise insulation ⇒ General body repairs, exterior; Rep. gr. 66 ; Noise insulation; Assembly overview - noise insulation .

– Release hose clip -1- and detach air hose from charge air cooler.

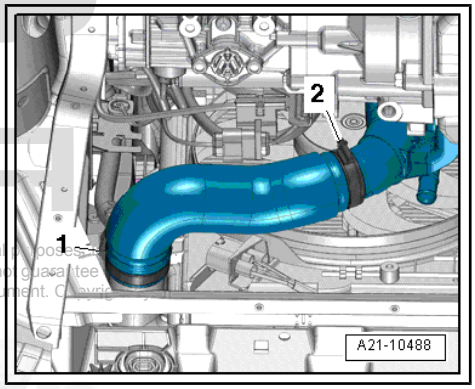

Note

Item -2- can be disregarded.

– Remove air filter housing ⇒ page 356 .

– Vehicles with auxiliary radiator (left-side): Move coolant hose -3- clear.

– Move electrical wiring harnesses -1, 2- clear at air pipe.

– Unfasten screw-type clip -4-.

– Unscrew bolts -arrows- and detach air pipe.

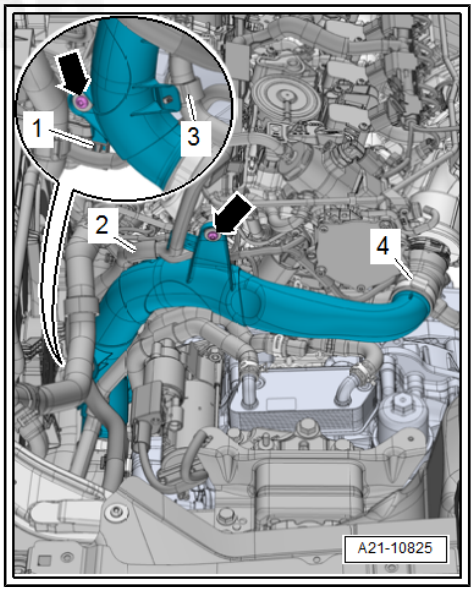

– Unplug connector -1-.

– Clamp off coolant hoses on the coolant valve for gearbox - N488- with hose clamps -3094- .

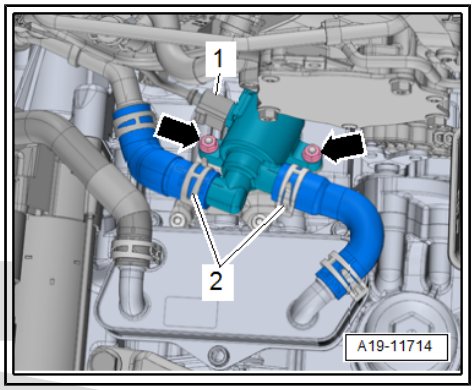

Note

Place a cloth underneath to catch escaping coolant.

– Seal the connection of the gearbox oil radiator with a suitable cap from the engine sealing cap set - VAS 6122- .

– Release hose clips -2- and disconnect coolant hoses.

– Remove nuts -arrows- and detach coolant valve for gearbox - N488- .

Fitting

Install in the reverse order of removal, observing the following:

Note

Secure all hose connections with the correct type of hose clips (same as original equipment) ⇒ Electronic parts catalogue (ET-KA) .

– Check coolant level ⇒ page 244 .

Specified torques

- ⇒ “2.2 Exploded view - electric coolant pump”, page 270
- ⇒ “3.1 Exploded view - air cleaner housing”, page 355
- Assembly overview - noise insulation ⇒ General body repairs, exterior; Rep. gr. 66 ; Noise insulation; Assembly overview - noise insulation .

2.9 Removing and installing actuator for engine temperature regulation - N493-

Removing

– Remove coolant pump ⇒ page 276 .

– Remove throttle valve module - GX3- ⇒ “4.1 Exploded view - intake manifold”, page 358 .

– Unscrew coolant pipe from intake manifold -arrows-.

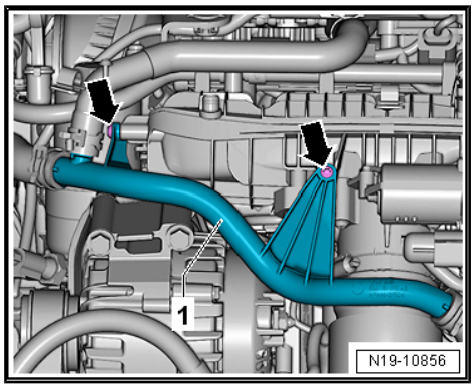

– Lift retaining clips -1- and disconnect coolant hoses.

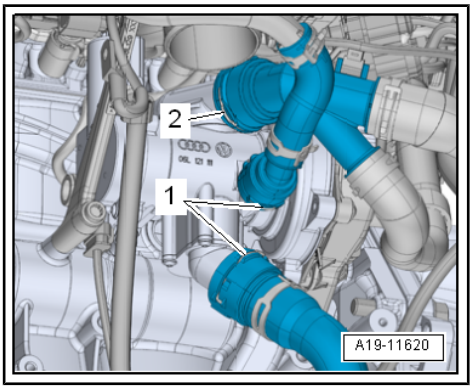

Note

Ignore -item 2-.

– Pull connector -1- off actuator for engine temperature regulation - N493- .

– Remove bracket for electrical connector -1-.

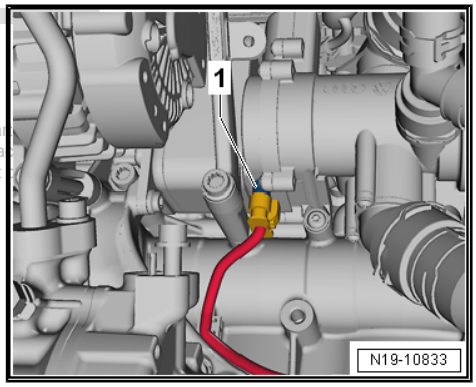

– Remove bolts -1 ... 5-.

– Detach actuator for engine temperature regulation - N493- from centring pins and pull actuator off engine oil cooler.

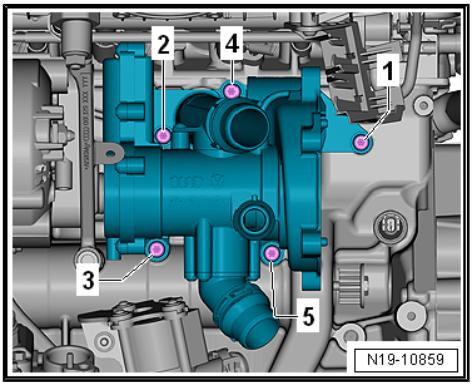

Fitting

Install in the reverse order of removal, observing the following:

Note

Renew gaskets and O-rings.

– Coat new O-rings -4- with coolant; coolants ⇒ Electronic Parts Catalogue (ETKA) .

– Ensure that the centring bolts are fitted to the engine block and if not, fit them.

– Fit connecting piece -2- into engine oil cooler -1-.

– Push actuator for engine temperature regulation - N493- -3- onto connecting piece and centring pins in cylinder block.

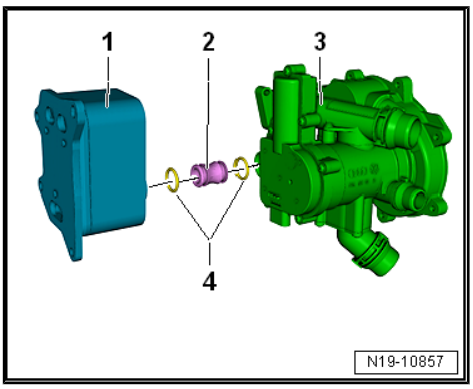

– Tighten bolts for actuator for engine temperature regulation - N493- . ⇒ page 270

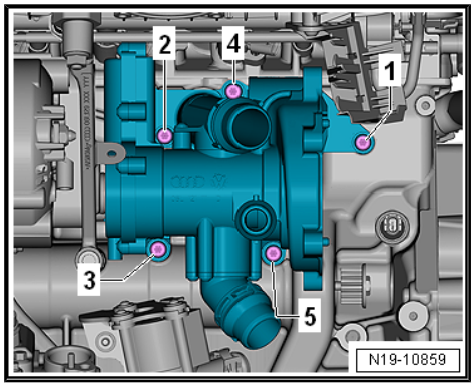

Note

The protective cap -arrow- must be removed if a new coolant pump is going to be installed.

– Install coolant pump ⇒ page 276 .

– Replenish coolant ⇒ page 240 .

Specified torques

- ⇒ “2.1 Exploded view - coolant pump and thermostat”, page 268
- ⇒ “4.1 Exploded view - intake manifold”, page 358

2.10 Removing and installing coolant temperature sender - G62-

Removing

- Engine cold.

– To relieve residual pressure in cooling system, open filler cap -arrow- on coolant expansion tank briefly and then close cap again (it should click into place).

– Remove air filter housing ⇒ page 356 .

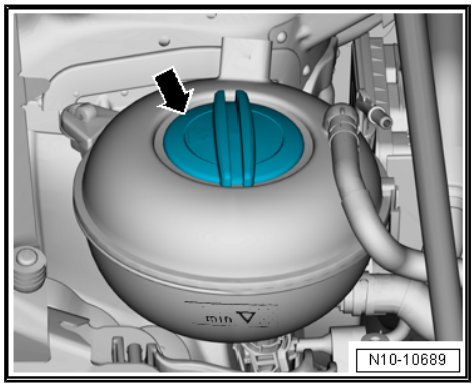

– Release the hose clamp -2-.

– Remove bolt -1- and press air pipe (left-side) towards left slightly.

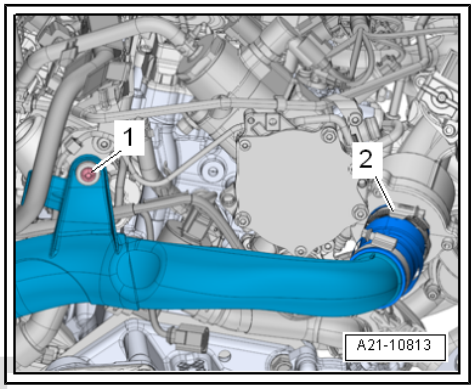

– Unplug connector -1-.

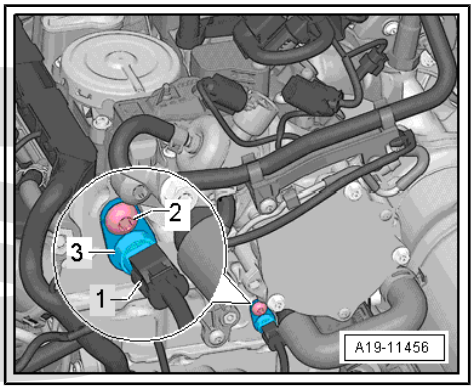

Note

- *Place a cloth underneath to catch escaping coolant.*
- *Insert new coolant temperature sender - G62- immediately into union to avoid loss of coolant.*

– Unscrew bolt -2-, coolant, remove temperature sender - G62- - item 3-.

Fitting

Install in the reverse order of removal, observing the following:

Note

Replace the O-rings.

– Check coolant level ⇒ page 240 .

Specified torques

- ⇒ “2.3 Exploded view - coolant temperature sensors”, page 273
- ⇒ “3.1 Exploded view - air cleaner housing”, page 355

2.11 Removing and installing coolant temperature sender at radiator outlet - G83-

Removing

- Engine cold.

– To relieve residual pressure in cooling system, open filler cap -arrow- on coolant expansion tank briefly and then close cap again (it should click into place).

– Remove noise insulation ⇒ General body repairs, exterior; Rep. gr. 66 ; Noise insulation; Assembly overview - noise insulation .

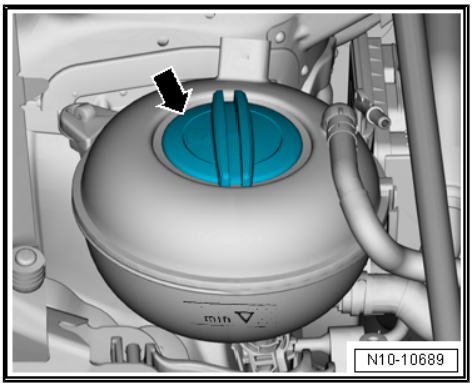

– Disconnect connector -4-, and pull out retaining clip -3-.

– Pull out radiator outlet coolant temperature sender - G83- -1- with O-ring -2-.

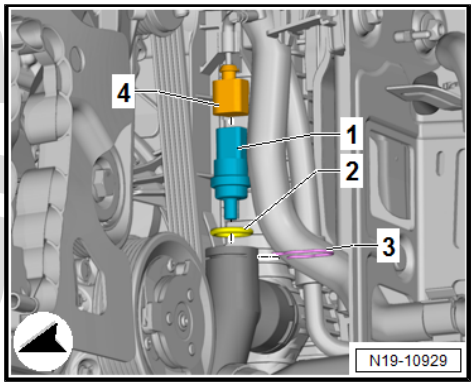

Note

- *Place a cloth underneath to catch escaping coolant.*
- *Insert new coolant temperature sender - G83- immediately into screw connection at radiator outlet to avoid loss of coolant.*

Fitting

Install in the reverse order of removal, observing the following:

Note

Renew O-ring.

– Check coolant level ⇒ page 240 .

Specified torques

- Assembly overview - noise insulation ⇒ General body repairs, exterior; Rep. gr. 66 ; Noise insulation; Assembly overview - noise insulation .

3 Coolant pipes

⇒ “3.1 Exploded view - coolant pipes”, page 287

⇒ “3.2 Removing and installing coolant pipe at front of engine”, page 287

⇒ “3.3 Removing and installing coolant pipes (top)”, page 289

3.1 Exploded view - coolant pipes

1 - Front coolant pipe
- ❑ Removing and fitting ⇒ page 287

2 - Bolts
- ❑ 6 Nm

3 - Upper coolant pipe
- ❑ Removing and fitting ⇒ page 289

4 - Bolts
- ❑ 9 Nm

5 - Bolt
- ❑ 9 Nm

6 - Coolant line

7 - Bolts
- ❑ 9 Nm

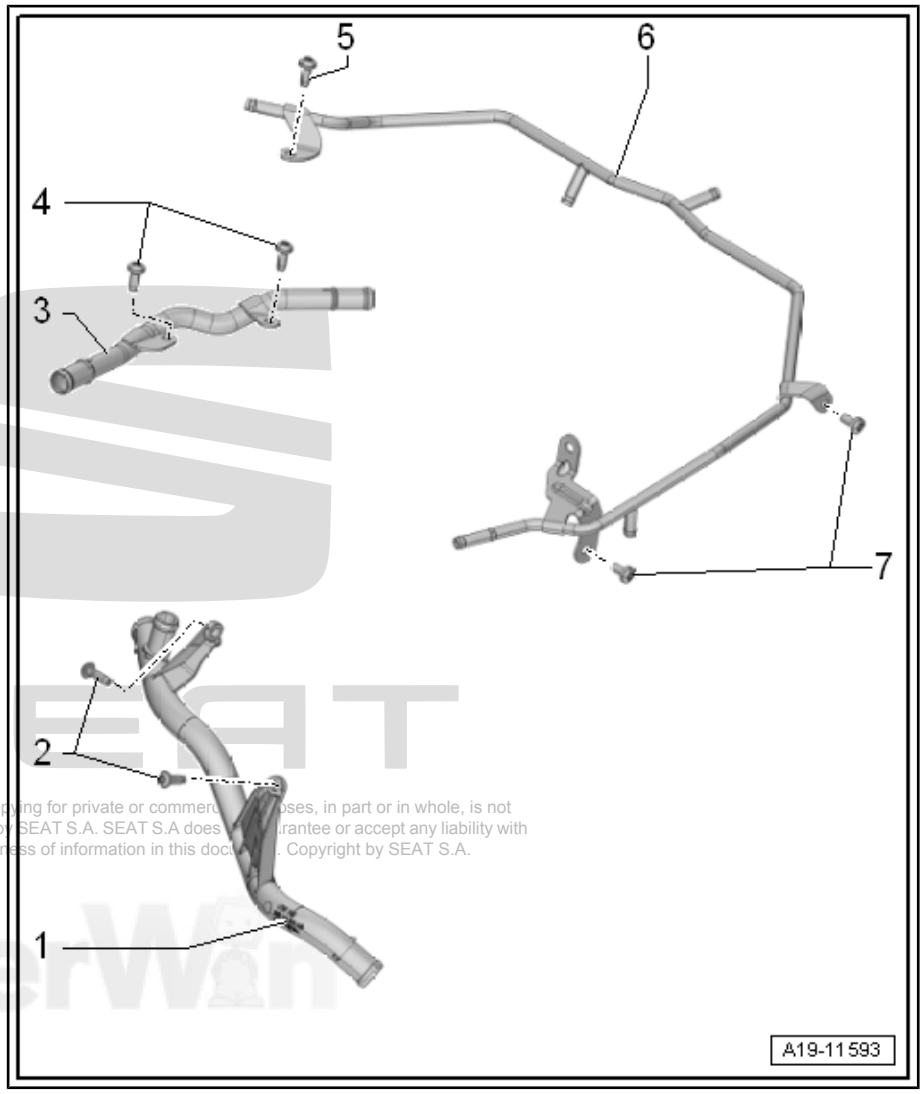

3.2 Removing and installing coolant pipe at front of engine

Special tools and workshop equipment required

♦ Hose clamps, up to Ø 25 mm - 3094-

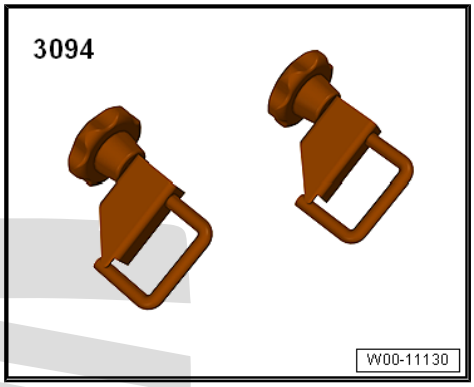

♦ Hose clip pliers - VAS 6362-

Removing

– Remove air filter housing ⇒ page 356 .

– Free coolant hose -2-.

– Remove bolts -arrows-.

– Unclip front side of the air guide -1- by unlocking the retaining tabs arrows. Remove in -direction of arrow-.

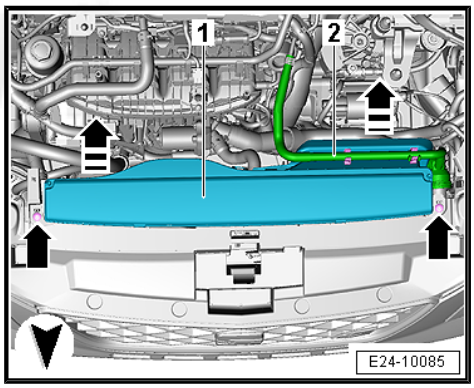

Note

Place a cloth under coolant pipe to catch escaping coolant.

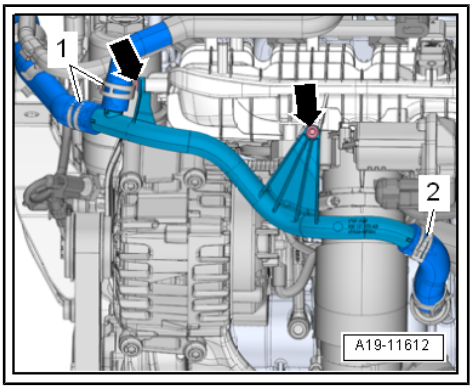

– Clamp off coolant hoses -1, 2- with hose clamps up to 25 mm - 3094- .
– Release hose clips and detach coolant hoses.
– Unscrew bolts -arrows- and remove coolant pipe (front).

Fitting

Install in the reverse order of removal, observing the following:

Note

Secure all hose connections with the correct type of hose clips (same as original equipment) ⇒ Electronic parts catalogue (ET-KA) .

– Check coolant level ⇒ page 244 .

Specified torques

♦ ⇒ “3.1 Exploded view - coolant pipes”, page 287

3.3 Removing and installing coolant pipes (top)

Special tools and workshop equipment required

♦ Hose clamps, up to Ø 25 mm - 3094-

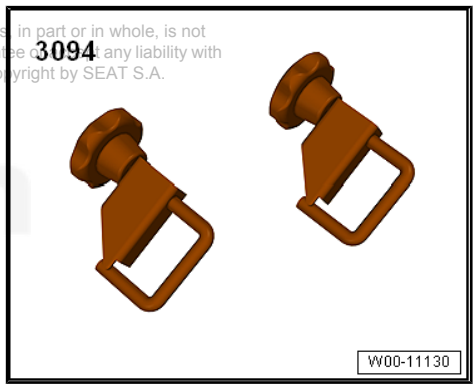

♦ Hose clip pliers - VAS 6362-

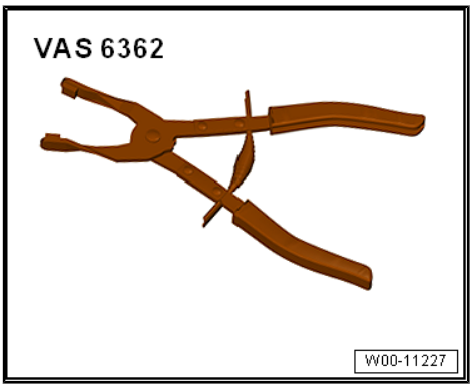

Removing

– Remove the ignition coil of cylinder “3” ⇒ page 452 .

– Release fasteners -arrows- and detach wiring duct -1- from bracket.

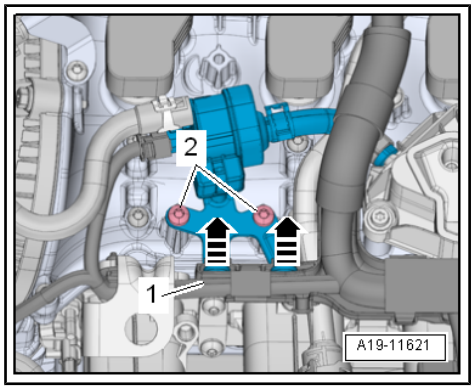

– Clamp off coolant hoses -arrows- with hose clamps up to 25 mm - 3094- .

– Release hose clips and detach coolant hoses.

– Unscrew bolt -1- and remove coolant pipe (top).

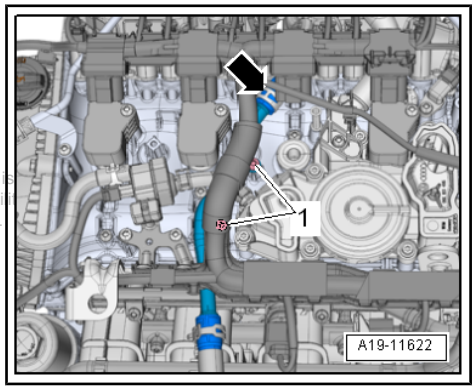

Fitting

Install in the reverse order of removal, observing the following:

Note

Secure all hose connections with the correct type of hose clips (same as original equipment) ⇒ Electronic parts catalogue (ET-KA) .

– Check coolant level ⇒ page 244 .

Specified torques

♦ ⇒ “3.1 Exploded view - coolant pipes”, page 287

4 Radiator/radiator fans

4.1 Exploded view - radiator/radiator fans

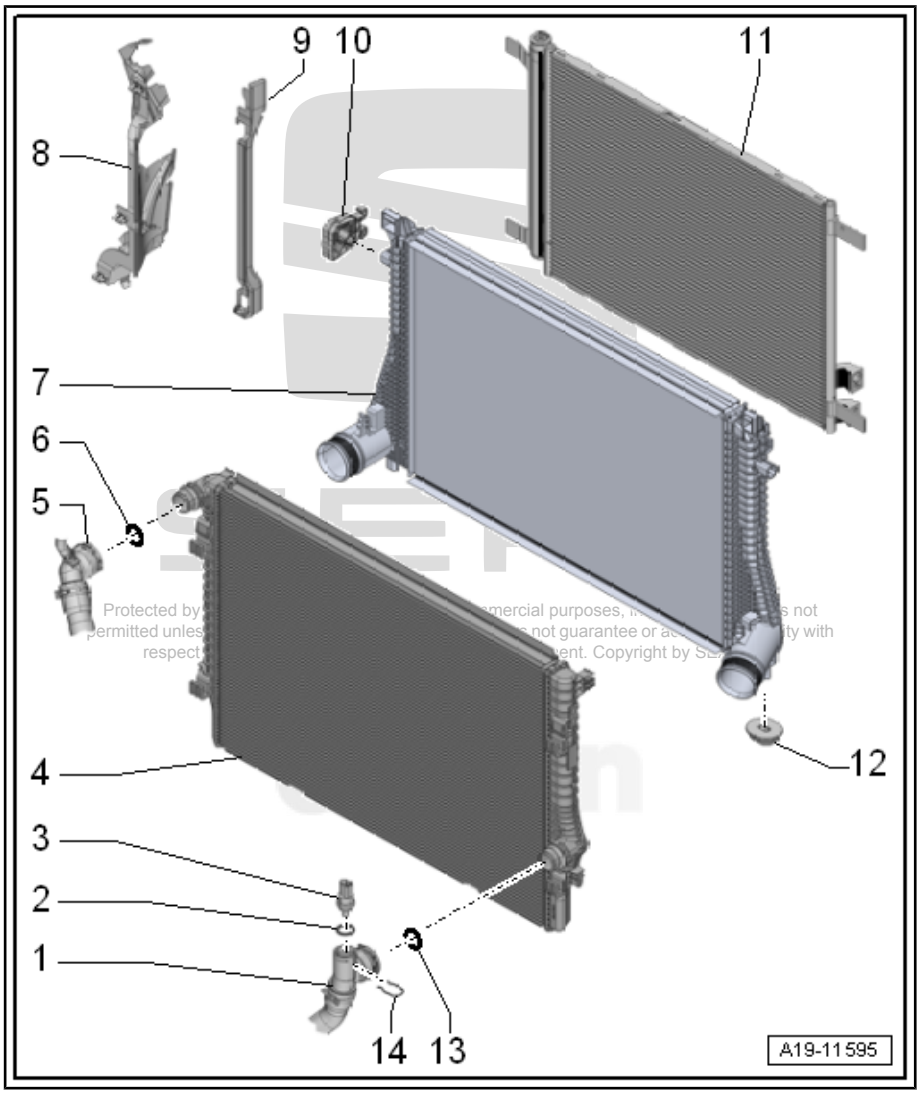

1 - Coolant hose

- ❑ Lift retaining clip for removal
- ❑ Connecting ⇒ page 292

2 - O-ring

- ❑ Renew
- ❑ Lubricate with coolant

3 - Coolant temperature sender at the radiator outlet - G83-

- ❑ Removing and fitting ⇒ page 285

4 - Coolant radiator

- ❑ removing and installing, version 1 ⇒ page 295
- ❑ removing and installing, version 2 ⇒ page 297
- ❑ Change coolant after renewing.

5 - Coolant hose

- ❑ Lift retaining clip for removal
- ❑ Connecting ⇒ page 292

6 - O-ring

- ❑ Renew
- ❑ Lubricate with coolant

7 - Intercooler system

- ❑ Removing and fitting ⇒ page 321

8 - air duct

9 - air duct

10 - Bonded rubber bush

- ❑ for radiator

11 - Condenser

- ❑ Removing and installing ⇒ Rep. gr. 87 ; Coolant circuit; Removing and installing condenser

12 - Bonded rubber bush

- ❑ For charge air cooler

13 - O-ring

- ❑ Renew
- ❑ Lubricate with coolant

14 - Retaining clip

- ❑ For radiator outlet coolant temperature sender - G83-

Connecting coolant hose with plug-in connector to radiator

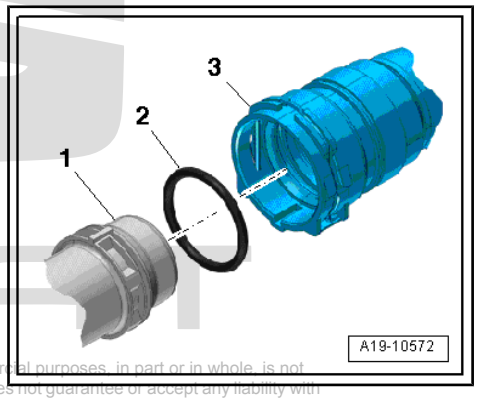

– Remove old O-ring -2- in coolant hose -3-.
– Moisten new O-ring with coolant and insert into coolant hose.
– Press coolant hose onto coolant pipe -1- until it engages with a click.
– Press coolant hose in again and then pull to check that plug-in connector is correctly engaged.

4.2 Exploded view - auxiliary radiator

⇒ “4.2.1 Assembly overview - right auxiliary radiator”, page 292
⇒ “4.2.2 Assembly overview - auxiliary radiator”, page 293

4.2.1 Assembly overview - right auxiliary radiator

Note

On vehicles with dual clutch gearbox, an auxiliary radiator may be installed at front right (depending on version).

1 - Air duct

2 - Auxiliary radiator
- ❑ Removing and installing ⇒ page 303

3 - Tube support bracket

4 - Coolant hose
- ❑ Return

5 - Coolant hose
- ❑ Supply

6 - Radiator mount
- ❑ upper

7 - Nuts
- ❑ 9 Nm

8 - Support plate
- ❑ For auxiliary radiator

9 - Radiator mount
- ❑ Low

10 - Base

11 - Bolt
- ❑ 3.5 Nm

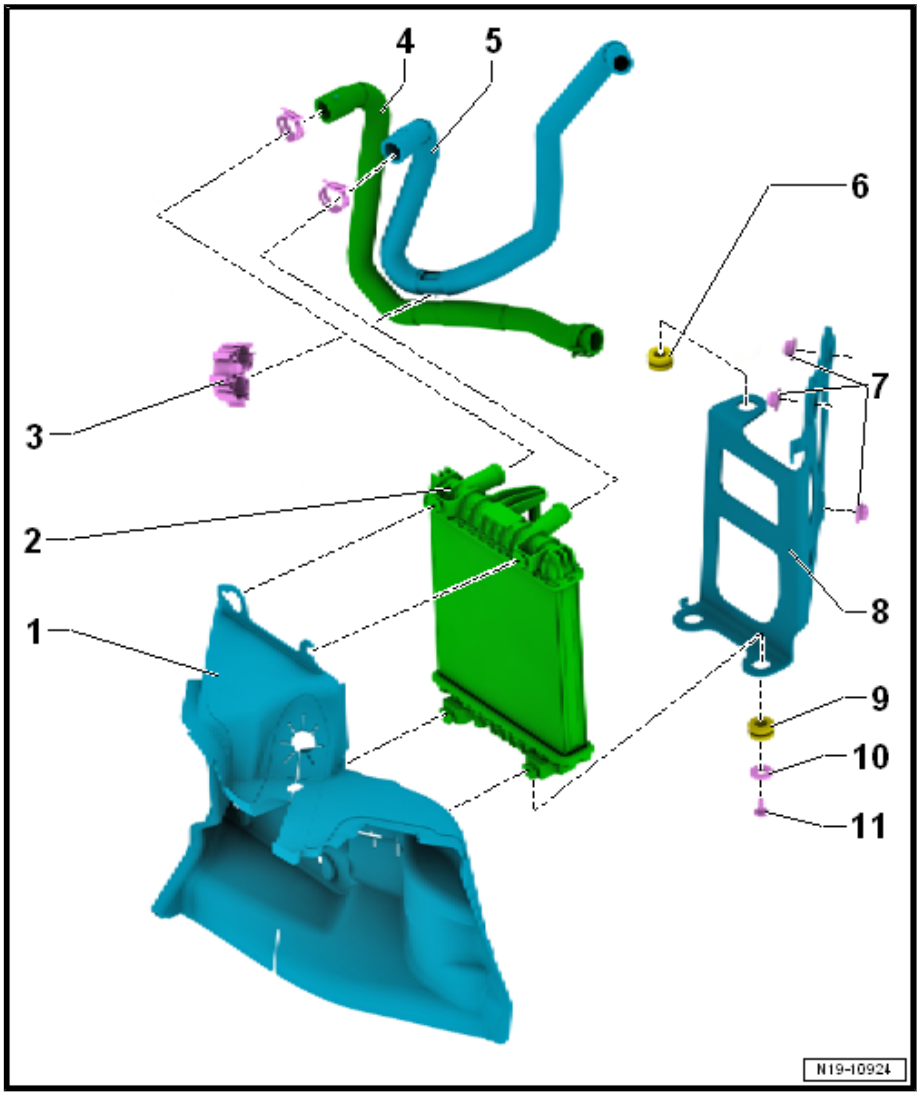

4.2.2 Assembly overview - auxiliary radiator

Note

- *On vehicles with manual gearbox, the auxiliary radiator is installed on the front right side.*
- *Vehicles with dual clutch gearbox are equipped with 2 auxiliary radiators – on the front right and front left sides.*

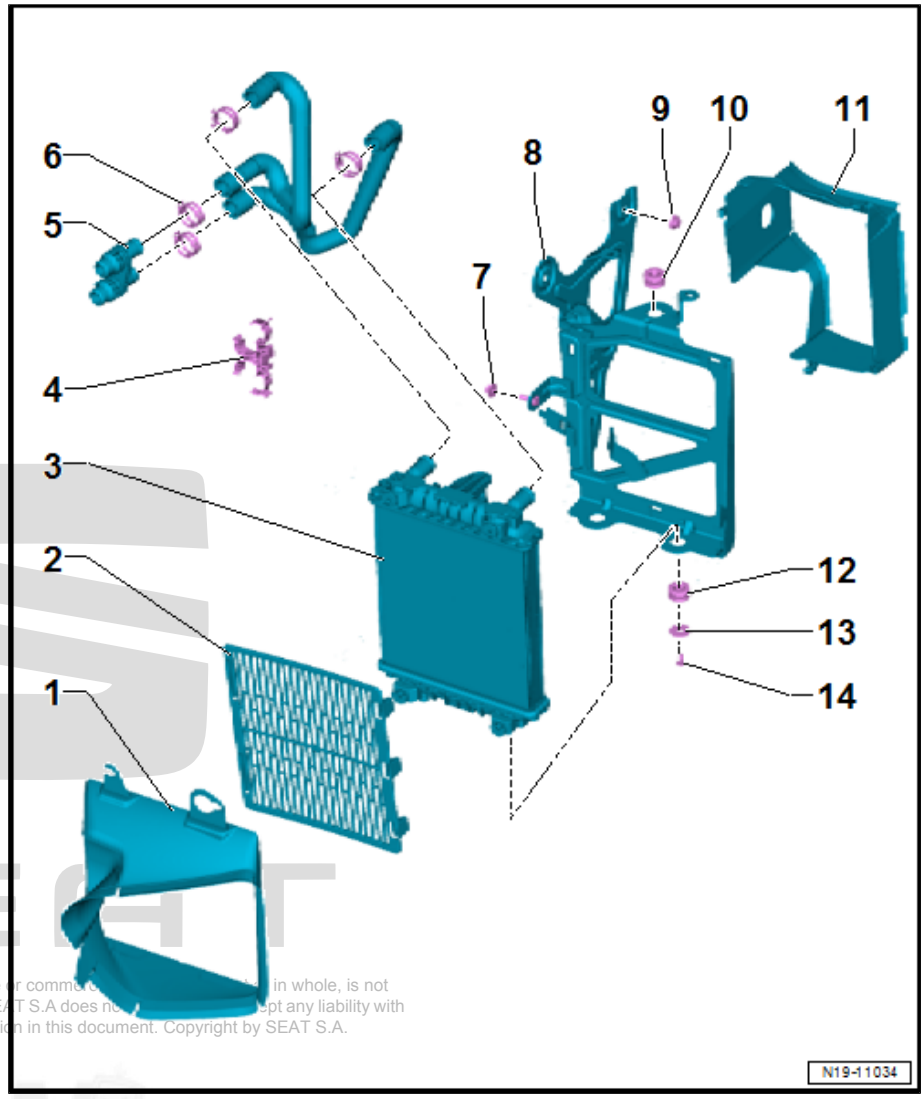

1 - air duct

2 - Protective screen
- ❑ Dependent on equipment

3 - Auxiliary radiator
- ❑ Removing and installing ⇒ page 303

4 - Hose retainer

5 - Connecting piece

6 - Coolant hoses

7 - Nut
- ❑ 9 Nm

8 - Support plate
- ❑ For auxiliary radiator

9 - Nut
- ❑ 9 Nm

10 - Rubber grommet
- ❑ For auxiliary radiator

11 - air duct
- ❑ Dependent on equipment

12 - Rubber grommet
- ❑ For auxiliary radiator

13 - Base

14 - Bolt
- ❑ 3.5 Nm

4.3 Exploded view - radiator cowl and radiator fans

1 - Bolt
- ❑ 5 Nm

2 - Fan shroud
- ❑ Removing and fitting ⇒ page 300

3 - Bolt
- ❑ 5 Nm

4 - Refrigerant fan - V7-
- ❑ Removing and fitting ⇒ page 302

5 - Radiator fan 2 - V177-
- ❑ Removing and fitting ⇒ page 302

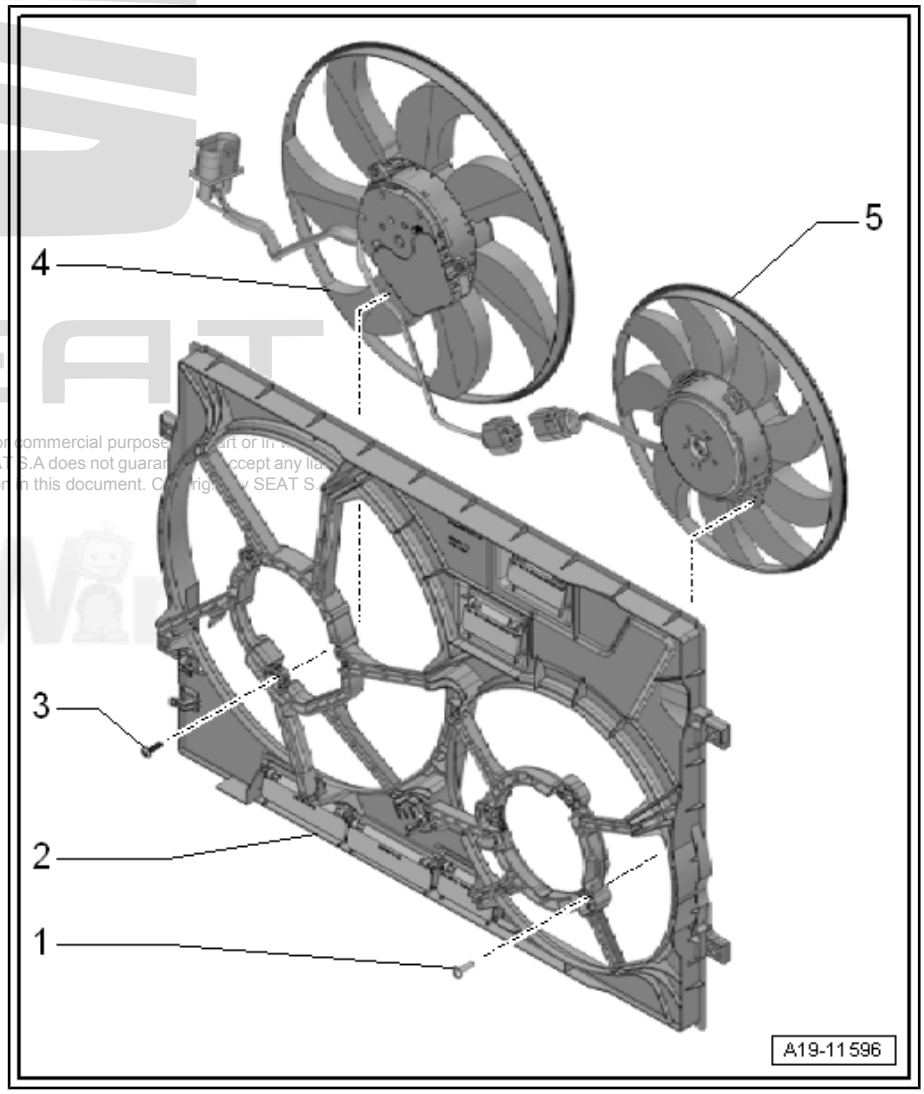

4.4 Removing and positioning radiator

⇒ "4.4.1 Removing and installing radiator, variant 1", page 295
⇒ "4.4.2 Removing and installing radiator, variant 2", page 297

4.4.1 Removing and installing radiator, variant 1

Special tools and workshop equipment required

- Drip tray for workshop hoist - VAS 6208-

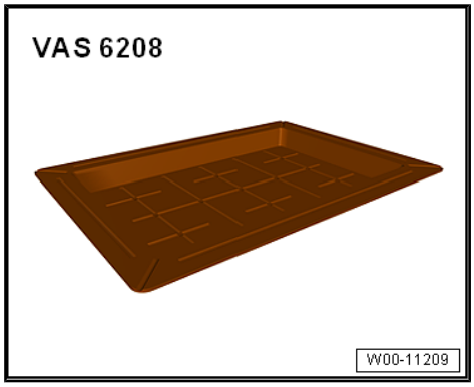

- Wedge - 3409-

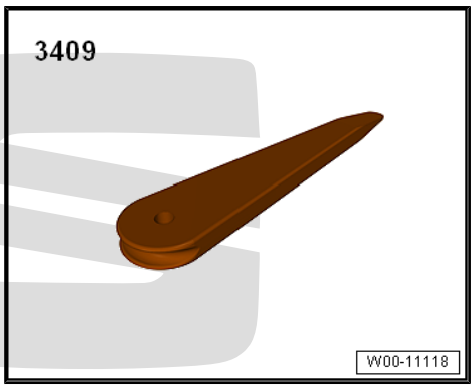

Removing

– Drain coolant ⇒ page 239 .

– Remove radiator cowl ⇒ page 300 .

– Seal off open pipes/lines and connections immediately with clean plugs from engine sealing cap set -VAS 6122-.

– Lift the retaining clip -arrow-, remove the coolant hose at the top left from the radiator.

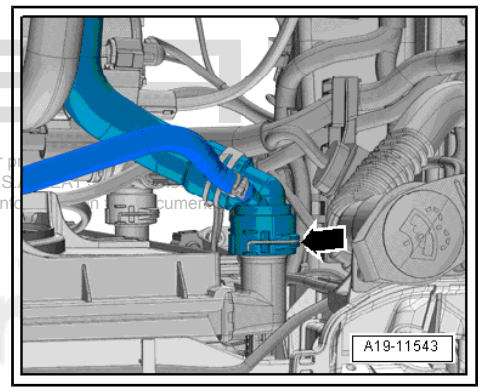

– Use the removal wedge -1- to press both sides of locking tab - 3409- away from the engine compartment -in the direction of the arrow-.

– Pull radiator out of mountings at bottom.

– Remove radiator from water radiator for charge air cooling circuit.

– Remove radiator (top section).

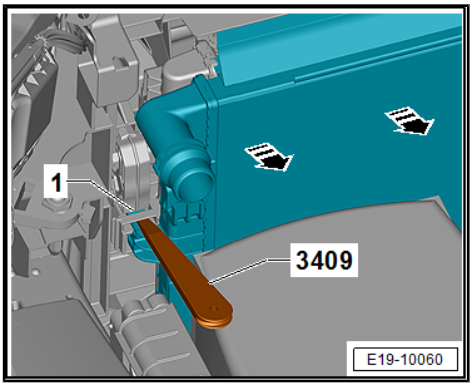

Fitting

Install in the reverse order of removal, observing the following:

Note

- *If there are minor dents in the fins, refer to repair instructions ⇒ page 10 .*
- *Replace the O-rings.*
- *The coolant in the entire system must be changed if the radiator is renewed.*

– Install radiator cowl ⇒ page 300 .

– Replenish coolant ⇒ page 244 .

Specified torques

- ⇒ “4.1 Exploded view - radiator/radiator fans”, page 291
- ⇒ “4.3 Exploded view - radiator cowl and radiator fans”, page 295

4.4.2 Removing and installing radiator, variant 2

Special tools and workshop equipment required

- Drip tray for workshop hoist - VAS 6208-

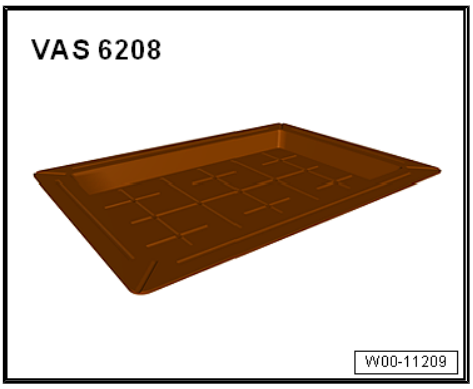

♦ Wedge - 3409-

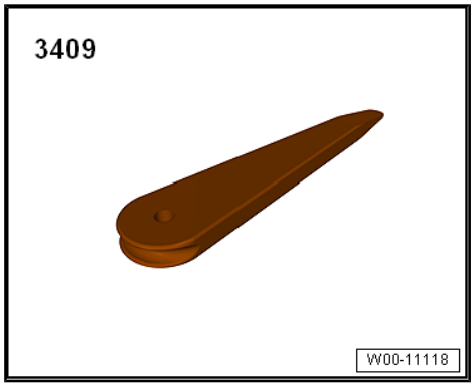

Removing

– Drain coolant ⇒ page 239 .

– Remove coolant hose at top left from radiator -arrow-.

– Remove radiator cowl ⇒ page 300 .

– Seal off open pipes/lines and connections immediately with clean plugs from engine sealing cap set - VAS 6122- .

– Remove front bumper ⇒ General body repairs, exterior; Rep. gr. 63 ; Front bumper; Removing and installing bumper cover .

– Removing the headlights ⇒ Electrical System; Rep. gr. 94 ; Headlights; Assembly overview - Headlights .

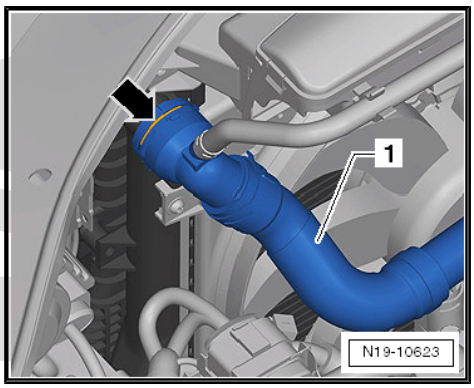

Vehicles with coolant bearing support, clipped in

– Release catches -arrows- of radiator mounting -1- on left and right, or cut through using side cutters.

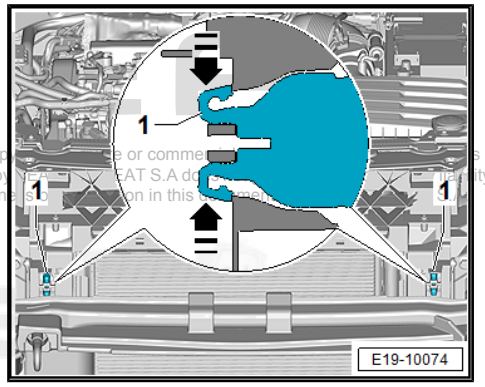

Note

The radiator mounting carrier will be reused during installation. It will then be bolted to the lock carrier. Bolts ⇒ ETKA (Electronic parts catalogue) .

Vehicles with radiator mounting bracket, screwed on

– Unscrew bolts -2- of radiator mounting carrier -1- on left and right.

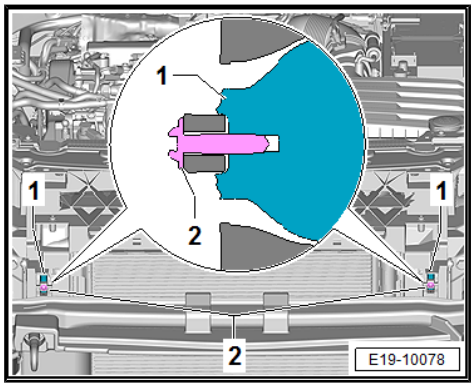

Continued for all vehicles

– Turn radiator component with top edge towards the engine.

– Press down left and right locking pins -arrow- of the radiator. Press radiator off charge air cooler.

– Remove radiator upwards.

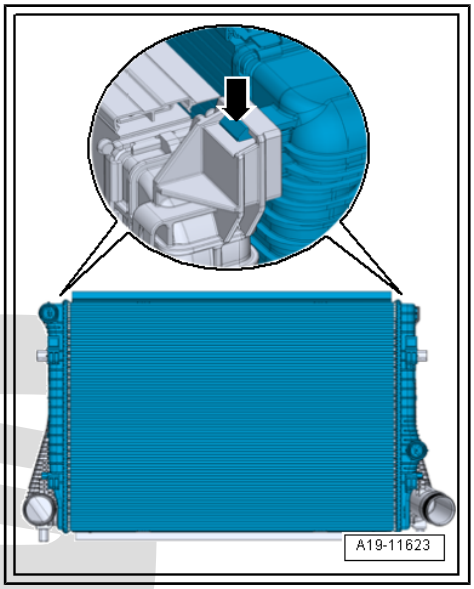

Installation

Note

♦ *If there are minor dents in the fins, refer to respective instructions* ⇒ page 10 .

♦ *Renew O-rings after removal.*

– Insert radiator at an angle into lower charge air cooler mounting, and engage radiator in charge air cooler -arrow-. Ensure proper engagement by pulling.

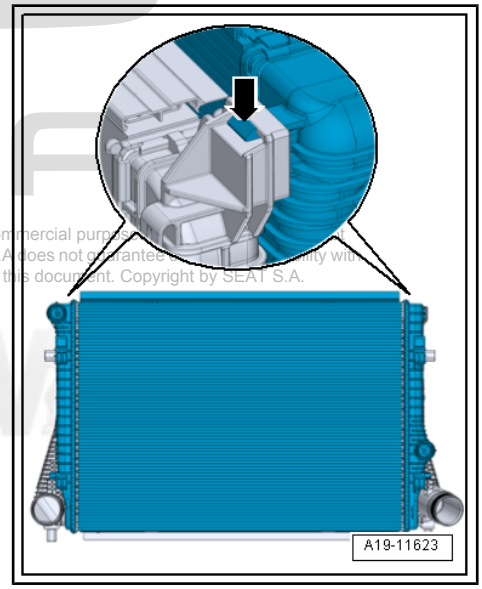

Installation position of the bearing support for the charge-air cooler

– Position right and left bearing support for the charge-air cooler -1- on the cooler. When doing so, note the installation position -arrow-.

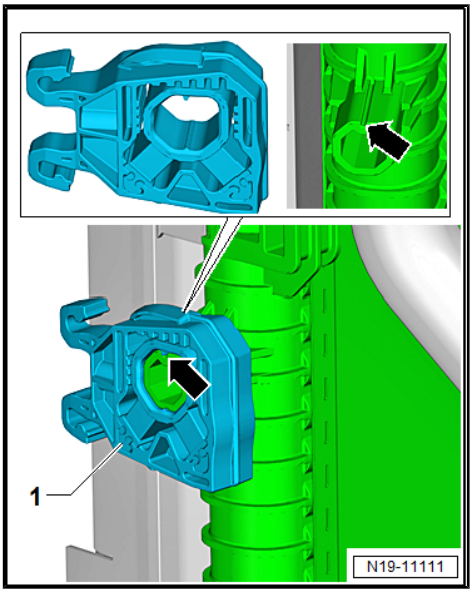

– Swing water radiator for charge air cooling circuit into lock carrier. Ensure proper seating of radiator mountings -1- in lock carrier.

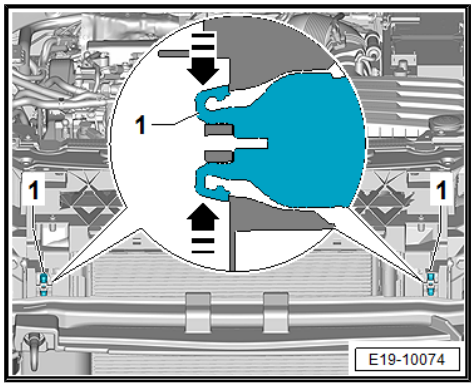

Vehicles with bearing support for charge-air cooler, bolted.

– Use bolts to secure radiator mountings, whose fasteners have been pinched off, to lock carrier. Screws -2- ⇒ ETKA (electronic spare parts catalogue) .

• Tightening torque: 5 Nm

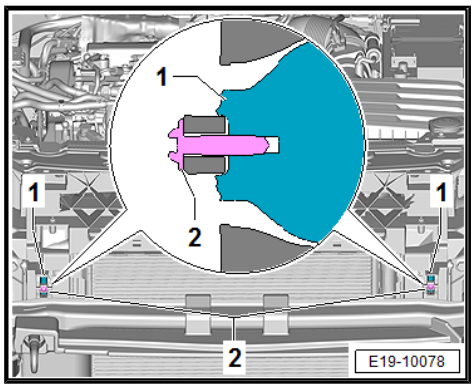

Continued for all vehicles

– Install radiator cowl ⇒ page 300 .

– Connect coolant hose with plug-in connector ⇒ page 292 .

– Install the front headlights ⇒ Electrical System; Rep. gr. 94 ; Headlights; Assembly overview - Headlights .

– Install front bumper ⇒ General body repairs, exterior; Rep. gr. 63 ; Front bumper; Removing and installing front bumper cover .

– Fill with new coolant ⇒ page 244 .

Specified torques

♦ ⇒ “4.1 Exploded view - radiator/radiator fans”, page 291

♦ ⇒ Electrical system; Rep. gr. 94 ; Headlight; exploded view: headlight

♦ ⇒ General body repairs, exterior; Rep. gr. 63 ; Front bumper; Removing and installing bumper cover

4.5 Removing and installing radiator cowl

Removing

– Remove air filter housing ⇒ page 356 .

– Lay coolant hose -3- to one side.

– Unscrew bolts -1-.

– Release locking lugs-arrow-, unclip air hose -2- from the front end and remove in -direction of the arrow-.

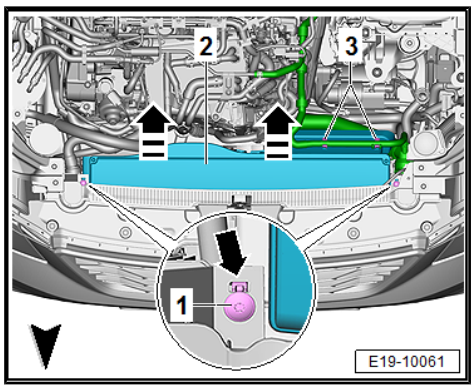

– Vehicles with auxiliary radiator: Unscrew bolts -arrows- and remove the engine hose.

– Remove noise insulation ⇒ General body repairs, exterior; Rep. gr. 66 ; Noise insulation; Assembly overview - noise insulation .

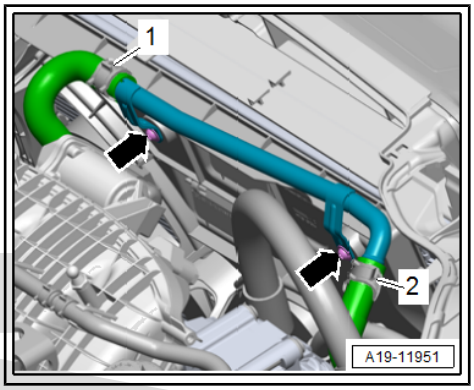

– Loosen hose clips -arrows-, and remove charge air hose -A-.

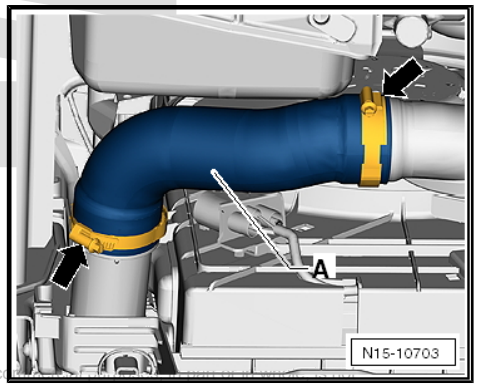

– Unplug electrical connector -1- for radiator fan (push retainer in direction of -arrow A- and press release catch down).

– Press locking tabs on left and right of radiator cowl simultaneously -arrow B-, and detach radiator cowl downwards.

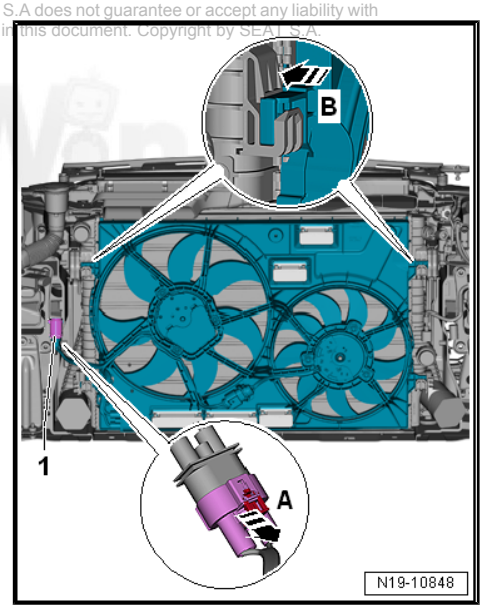

– Cover radiator using protective mat - VAS 531 003- .

Installation

Installation is in the reverse sequence of removal.

Specified torques

♦ ⇒ General body repairs, exterior; Rep. gr. 66 ; Noise insulation; Assembly overview - noise insulation

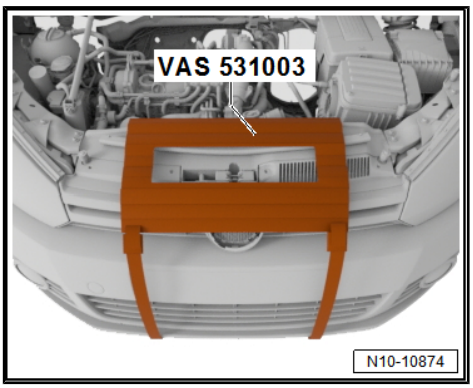

4.6 Removing and installing radiator fans

⇒ “4.6.1 Removing and installing radiator fan V7 ”, page 302

⇒ “4.6.2 Removing and installing radiator fan V177 ”, page 302

4.6.1 Removing and installing radiator fan - V7-

Removing

Note

All cable ties must be installed in their same place again.

– Remove radiator cowl ⇒ page 300 .

– Disconnect electrical connector -arrow-.

– Unscrew bolts -1- and remove radiator fan - V7- .

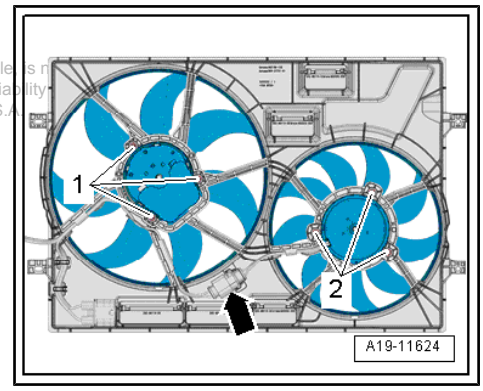

Fitting

Install in the reverse order of removal, observing the following:

– Install radiator cowl ⇒ page 300 .

Specified torques

♦ ⇒ “4.3 Exploded view - radiator cowl and radiator fans”, page 295

4.6.2 Removing and installing radiator fan - V177-

Removing

Note

All cable ties must be installed in their same place again.

– Remove radiator cowl ⇒ page 300 .

– Disconnect electrical connector -arrow-.

– Unscrew bolts -2- and remove radiator fan - V177- .

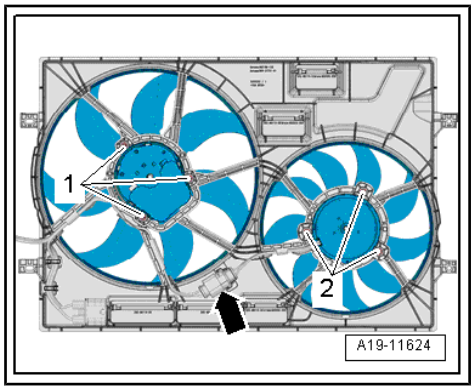

Fitting

Install in the reverse order of removal, observing the following:

– Install radiator cowl ⇒ page 300 .

Specified torques

♦ ⇒ “4.3 Exploded view - radiator cowl and radiator fans”, page 295

4.7 Removing and installing auxiliary radiator

⇒ "4.7.1 Removing and installing right auxiliary radiator", page 303

⇒ "4.7.2 Removing and installing left auxiliary radiator", page 305

4.7.1 Removing and installing right auxiliary radiator

Note

- *On vehicles with manual gearbox, the auxiliary radiator is installed on the front right side.*
- *Vehicles with dual clutch gearbox are equipped with 2 auxiliary radiators – on the front right and front left sides.*

Special tools and workshop equipment required

- Hose clamps, up to Ø 25 mm - 3094-

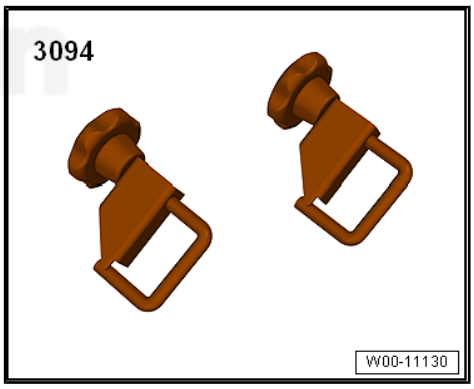

- Drip tray for workshop hoist - VAS 6208-

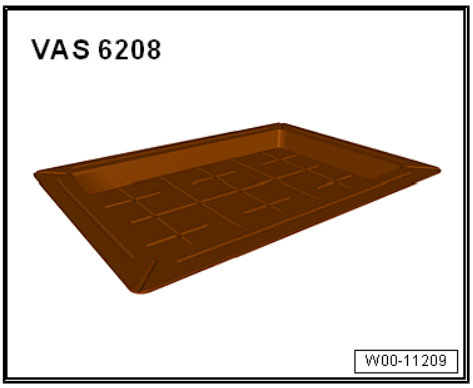

Removing

– Remove front right wheel ⇒ Running gear, axles, steering; Rep. gr. 44 ; Wheels, tyres and alignment .

– Remove the noise insulation ⇒ chassis installation work, exterior; Rep. gr. 66 ; Noise silencer; installation overview - noise insulation .

– Remove front part of right wheel housing liner ⇒ General body repairs, exterior; Rep. gr. 66 ; Wheel housing liners; Removing and installing front wheel housing liner .

– Remove front bumper cover ⇒ General body repairs, exterior; Rep. gr. 63 ; Front bumper; Removing and installing front bumper cover .

– Pull air duct -A- in direction of arrow off auxiliary radiator.

– Set drip tray for workshop hoist - VAS 6208- underneath.

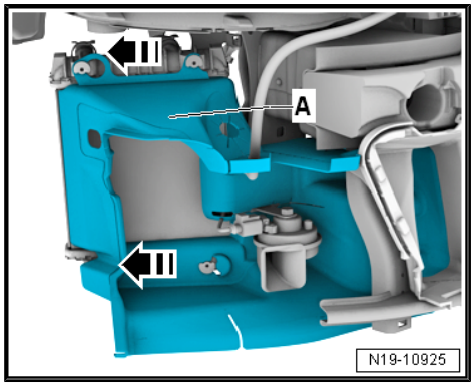

– Clamp off coolant hoses -A- and -B- with hose clamps - 3094- . Open spring-type clips, and remove hoses from auxiliary radiator.

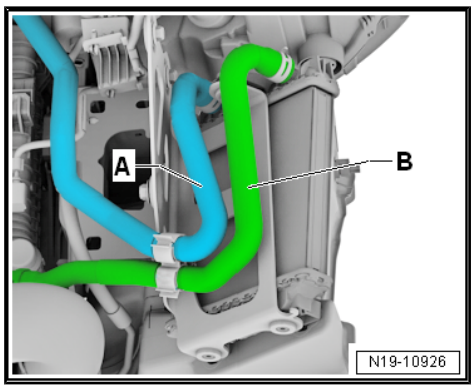

– Remove bolts -arrows-. Remove auxiliary radiator -A- upwards from bracket.

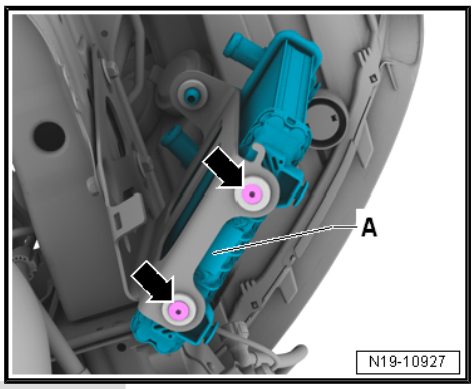

Installing

Install in the reverse order of removal, observing the following:

– Install front bumper cover ⇒ General body repairs, exterior; Rep. gr. 63 ; Front bumper; Removing and installing front bumper .

Install in the reverse order of removal, observing the following:

– Install front part of left wheel housing liner ⇒ General body repairs, exterior; Rep. gr. 66 ; Wheel housing liners; Assembly overview - Front wheel housing liner .

– Remove noise insulation ⇒ General body repairs, exterior; Rep. gr. 66 ; Noise insulation; Assembly overview - noise insulation .

– Install wheel ⇒ Running gear, axles, steering; Rep. gr. 44 ; Wheels, tyres; Wheel change .

Specified torques

♦ ⇒ “4.2 Exploded view - auxiliary radiator”, page 292

4.7.2 Removing and installing left auxiliary radiator

Note

- *On vehicles with manual gearbox, the auxiliary radiator is installed on the front right side.*
- *Vehicles with dual clutch gearbox are equipped with 2 auxiliary radiators – on the front right and front left sides.*

Special tools and workshop equipment required

- Hose clamps to Ø 25 mm - 3094-

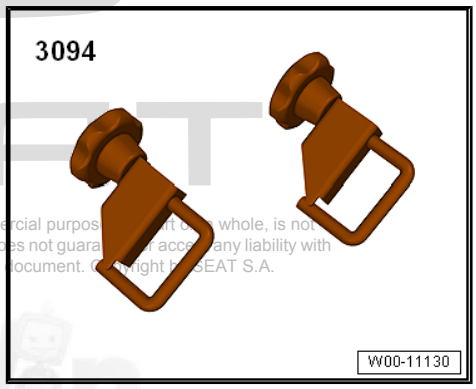

- Drip tray for workshop hoist - VAS 6208-

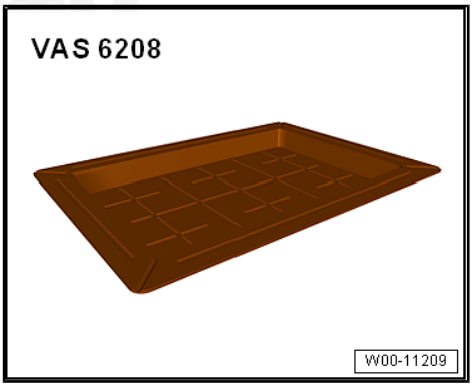

- Hose clip pliers - VAS 6362-

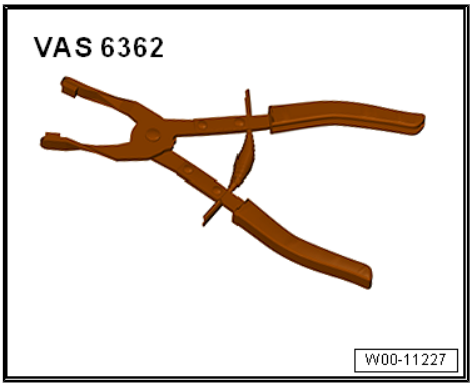

Removing

– Remove left front wheel ⇒ Running gear, axles, steering; Rep. gr. 44 ; Wheels, tyres; Wheel change .

– Remove noise insulation ⇒ General body repairs, exterior; Rep. gr. 66 ; Noise insulation; Assembly overview - noise insulation .

– Remove front part of left wheel housing liner ⇒ General body repairs, exterior; Rep. gr. 66 ; Wheel housing liners; Removing and installing front wheel housing liners .

– If fitted, unclip air duct -1- -arrows-.

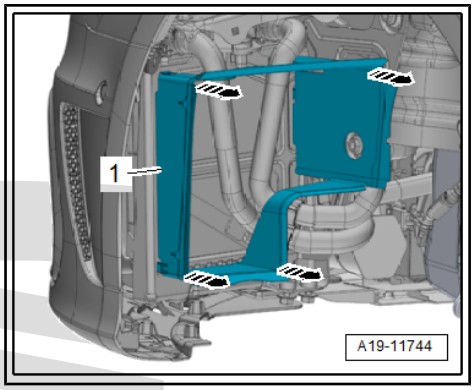

– Release catches -arrows A-, disconnect coolant hoses -arrows B- and move clear at bracket.

– Set drip tray for workshop hoist - VAS 6208- underneath.

– Clamp off coolant hoses using the hose clamps - 3094- . Open spring-type clips -1-, and remove hoses from auxiliary radiator.

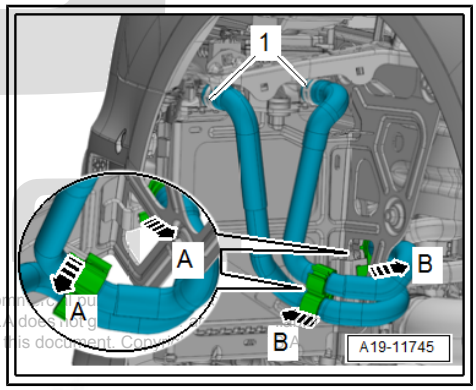

– Remove nuts -arrows- and detach auxiliary radiator -1- with bracket.

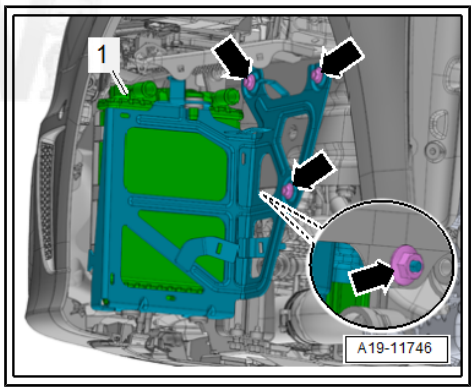

– Detach air duct -1- -arrow-.

– Remove bolts -4- and lift auxiliary radiator -2- off bracket -3-.

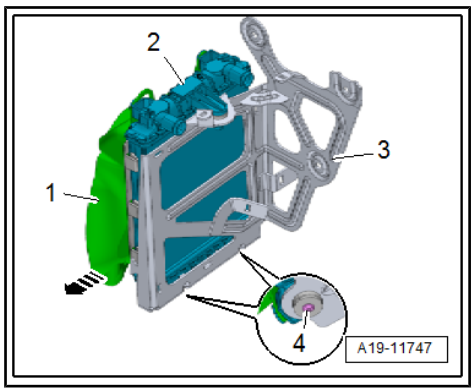

Fitting

Install in the reverse order of removal, observing the following:

– Install front part of left wheel housing liner ⇒ General body repairs, exterior; Rep. gr. 66 ; Wheel housing liners; Assembly overview - Front wheel housing liner .

– Remove noise insulation ⇒ General body repairs, exterior; Rep. gr. 66 ; Noise insulation; Assembly overview - noise insulation .

– Install wheel ⇒ Running gear, axles, steering; Rep. gr. 44 ; Wheels, tyres; Wheel change .

Specified torques

♦ ⇒ “4.2 Exploded view - auxiliary radiator”, page 292

21 – Turbocharging/supercharging

1 Turbocharger

⇒ "1.1 Exploded view - turbocharger", page 307
⇒ "1.2 Turbo compressor: removing and fitting", page 309
⇒ "1.3 Adjusting charge pressure positioner V465 ", page 316

1.1 Exploded view - turbocharger

Part I

Part II ⇒ page 308

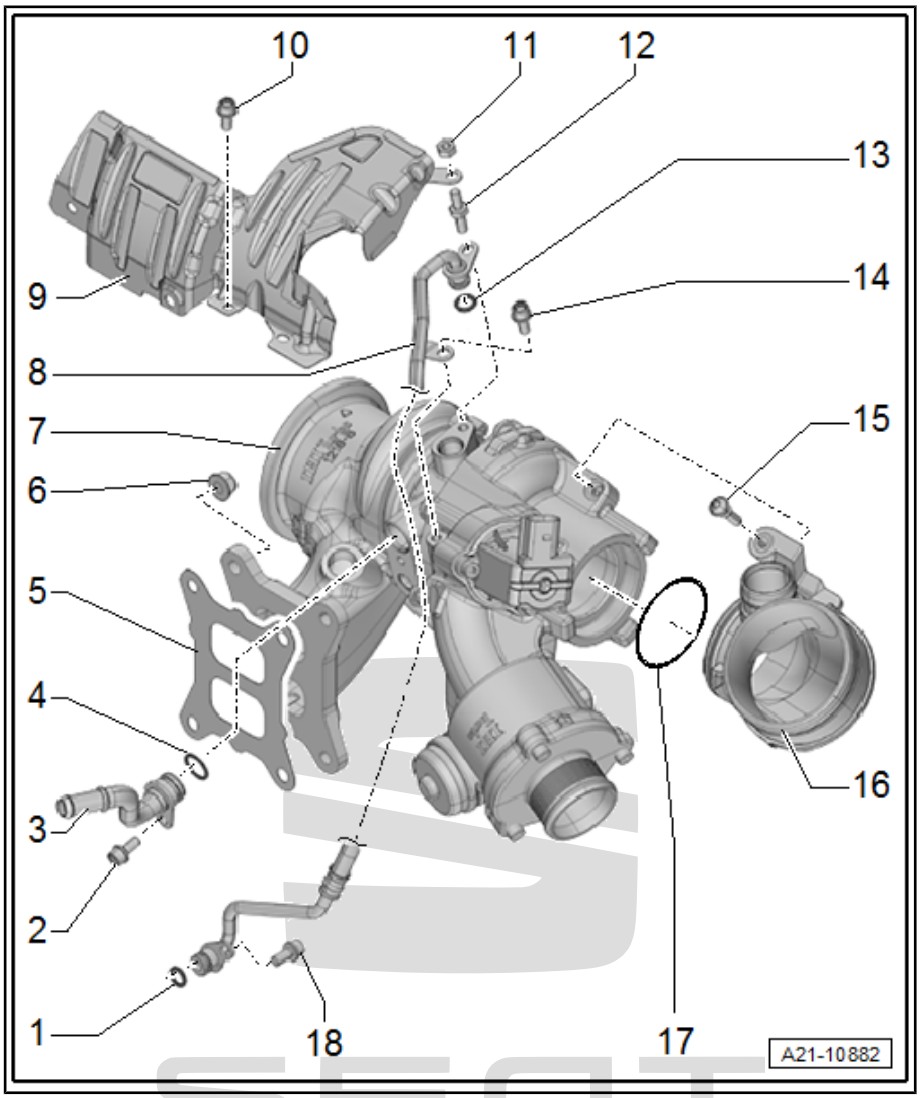

1 - O-ring
- ❑ Renew after removing
- ❑ Lubricate lightly with engine oil

2 - Bolt
- ❑ 9 Nm

3 - Coolant supply line

4 - O-ring
- ❑ Renew after removing
- ❑ Lubricate with coolant

5 - Gasket
- ❑ Renew after removing

6 - Nut
- ❑ Renew after removing
- ❑ 25 Nm

7 - Turbocharger
- ❑ Removing and fitting ⇒ page 309

8 - Oil supply line

9 - Heat shield

10 - Bolt
- ❑ 9 Nm

11 - Nut
- ❑ 9 Nm

12 - Bolt
- ❑ 9 Nm

13 - O-ring
- ❑ Renew after removal
- ❑ Lubricate lightly with engine oil

14 - Bolt
- ❑ 9 Nm

15 - Bolt
- ❑ 9 Nm

16 - Sleeve

17 - O-ring

- ❑ Renew after removing

18 - Bolt

- ❑ 9 Nm

Part II

Part I ⇒ page 307

1 - Bolt

- ❑ 9 Nm

2 - Oil return line

3 - O-ring

- ❑ Renew after removing
- ❑ Lubricate lightly with engine oil

4 - Bolt

- ❑ 10 Nm

5 - Charge pressure positioner - V465-

- ❑ Not available as replacement part, supplied together with turbocharger
- ❑ Adjusting ⇒ page 316

6 - Nut

- ❑ 10 Nm

7 - Bolt

- ❑ 9 Nm

8 - Sleeve

9 - O-ring

- ❑ Renew after removing

10 - Bolt

- ❑ 9 Nm

11 - Turbocharger air recirculation valve - N249-

- ❑ Note installation position ⇒ page 309 .

12 - O-ring

- ❑ Renew after removal

13 - Turbocharger

- ❑ Removing and fitting ⇒ page 309

14 - O-ring

- ❑ Renew after removing
- ❑ Lubricate with coolant

15 - Bolt

- ❑ 9 Nm

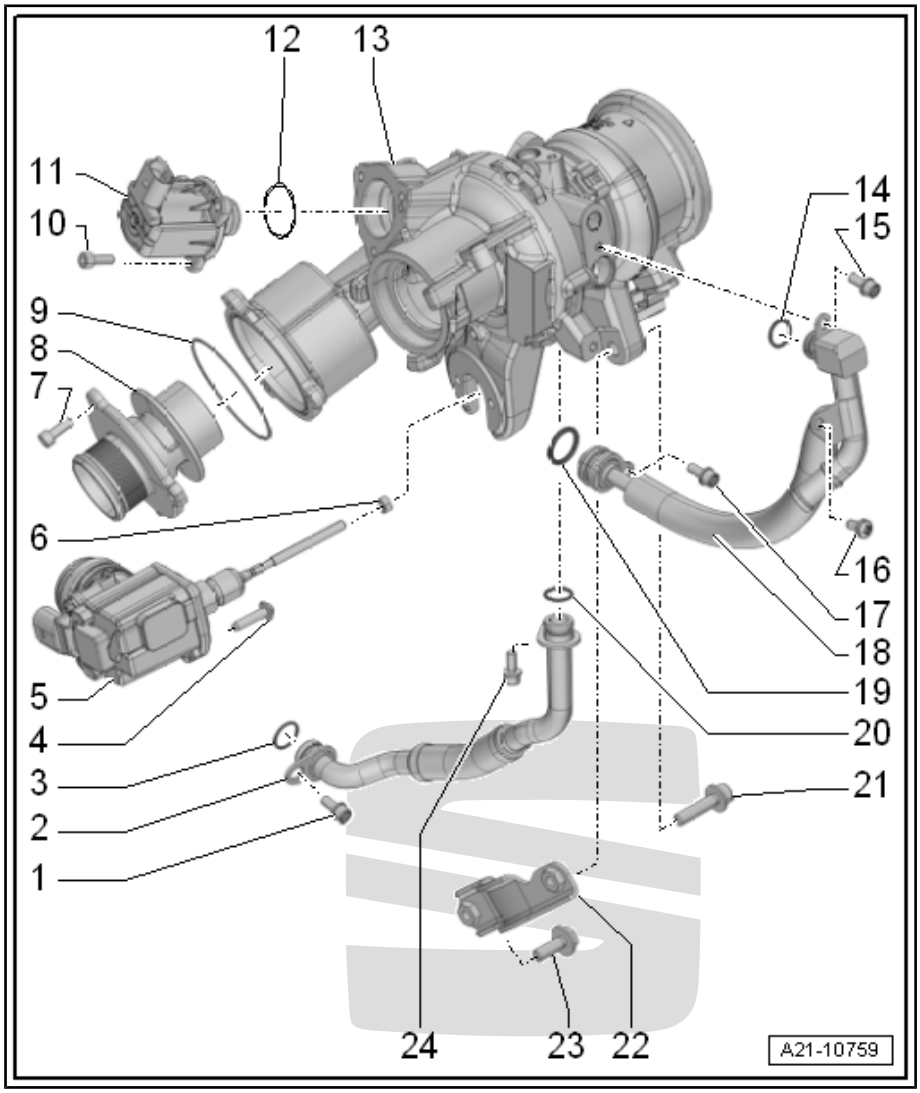

16 - Bolt

- ❑ 9 Nm

17 - Bolt

- ❑ 9 Nm

18 - Coolant return line

19 - O-ring

- ❑ Renew after removal
- ❑ Lubricate with coolant

20 - O-ring

- ❑ Renew after removing
- ❑ Lubricate lightly with engine oil

21 - Bolt

- ❑ Coat thread with high-temperature paste ⇒ Electronic parts catalogue (ETKA) .
- ❑ 30 Nm

22 - Support plate

- ❑ For the exhaust gas turbocharger

23 - Bolt

- ❑ 30 Nm

24 - Bolt

- ❑ 9 Nm

Fitting location of turbocharger air recirculation valve - N249-

– Note installation position -arrows-.

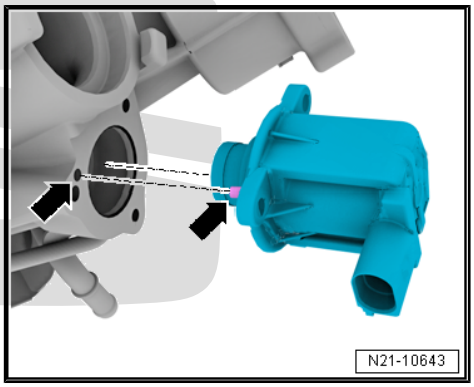

1.2 Turbo compressor: removing and fitting

Note

- *The turbocharger is removed from above.*
- *If the turbocharger has suffered mechanical damage (e.g. damaged compressor wheel), it is not sufficient merely to fit a new turbocharger. The following work must be performed in order to avoid further damage:*
- *Check air cleaner housing, air filter element and air hoses for dirt and foreign particles.*
- *Check the whole charge air path and charge air cooler for foreign objects.*
- *If foreign objects are discovered in the charge air system, clean the charge air path and, if necessary, renew the charge air cooler.*

Special tools and workshop equipment required

- Engine bung set - VAS 6122-

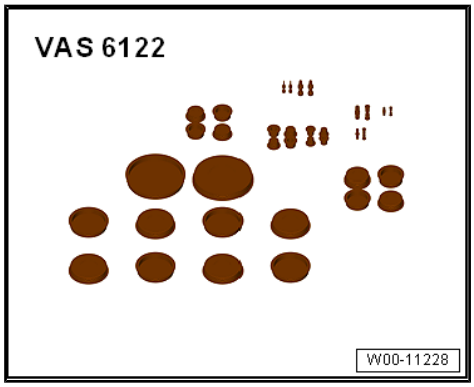

- Hose clip pliers - VAS 6362-

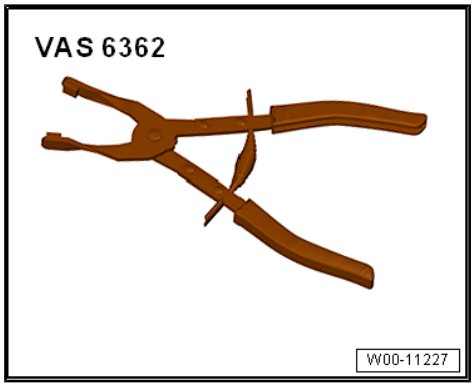

- Measuring tool - T10118-

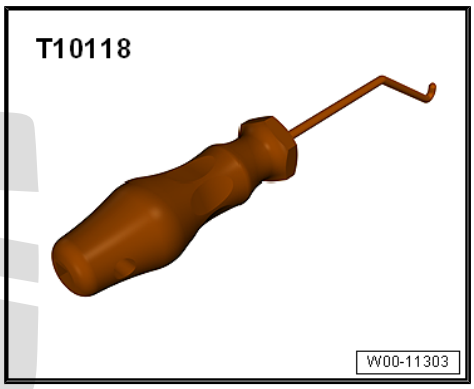

- Transport lock - T10404-

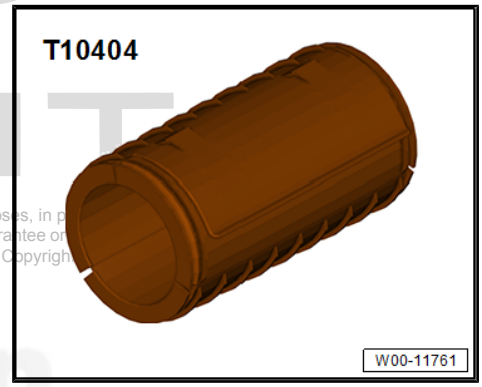

Removing

– Remove catalytic converter ⇒ page 420 .

– Remove engine cover panel ⇒ page 57 .

– Remove air filter housing to free some space ⇒ page 356 .

– Unscrew bolt -1-, and open hose clip -2-.
– Move cables at air pipe.
– Remove charge-air pipe of the exhaust gas turbocharger.

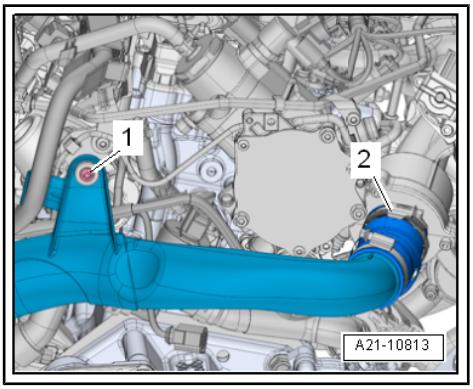

Note

Seal the removed cooling system lines with the engine sealing cap set - VAS 6122- , as a small amount of coolant escapes from the hoses

– Disconnect the coolant hose -arrow- and seal the line using the engine sealing cap set - VAS 6122- .
– Unplug electrical connectors -1- and -2-. Open retainer -3-.

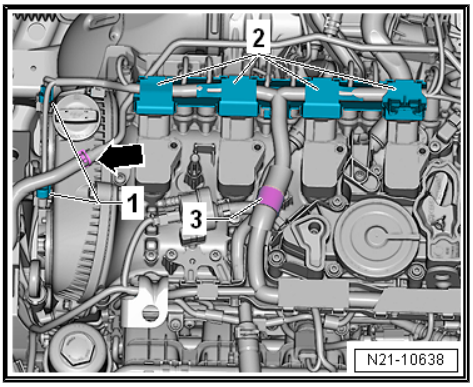

– Unscrew the bolt -1- from the earth wire and disconnect the coolant hoses -2- and 3, and seal the lines using the engine sealing cap set - VAS 6122- .
– Remove the electrical connectors -arrow-.

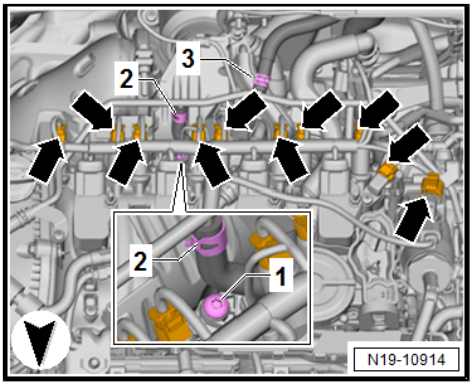

– Unplug electrical connectors -1, 3-.
– Press release tabs on crankcase breather hose -2- and detach hose.
– Unclip the guide rail staples and push the electrical wiring harness aside.

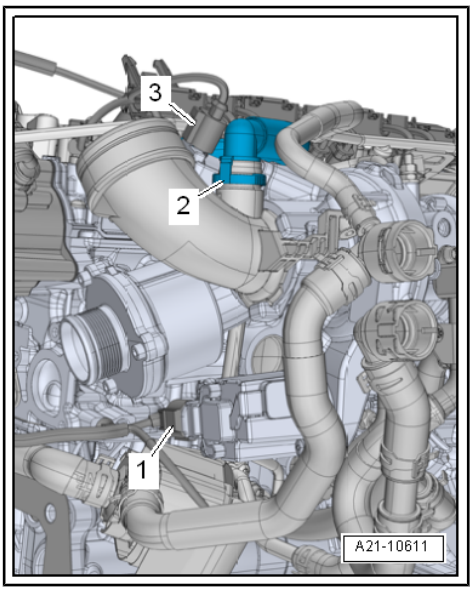

– Unscrew the bolt -1-, turn the rubber sleeve in the -direction of the arrow-, remove and place to one side.

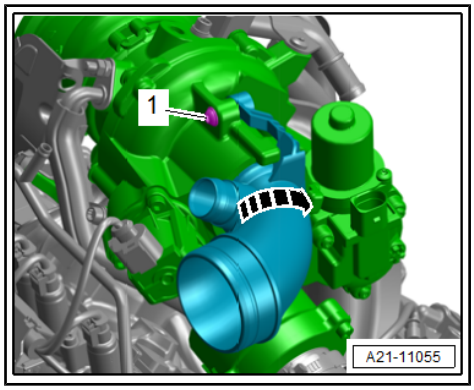

– Release fastener -arrow- and remove wiring duct -4- upwards from bracket.

– Unscrew bolts -1, 2 and 3-. Swivel coolant pipe to the side.

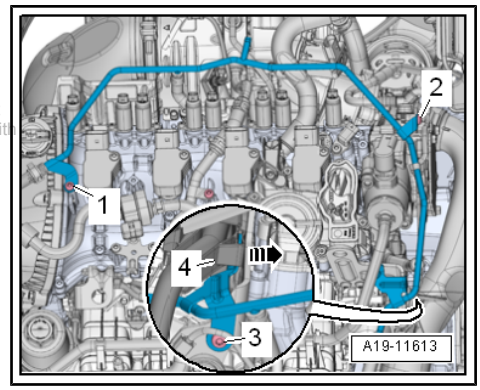

– Remove actuators for camshaft adjustment -1-.

– Remove ignition coils with output stages -arrows- ⇒ page 452 .

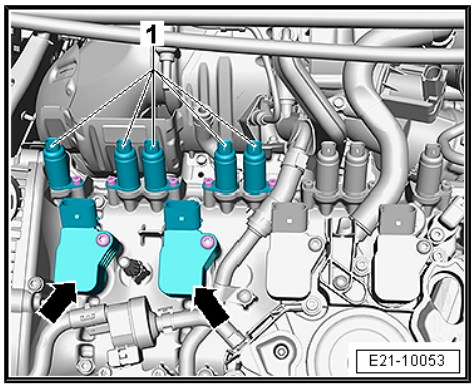

– Unscrew bolts -arrows- and nut -1-.

– Detach heat shield -2-.

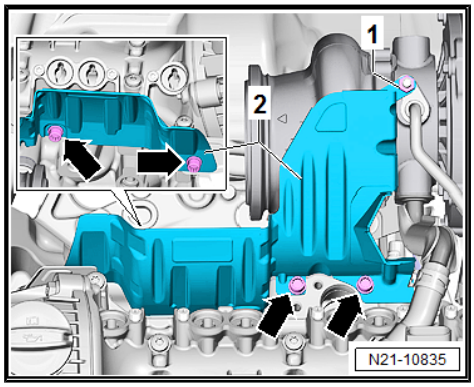

For vehicles with particulate filter

– Remove bolts -arrows- and nuts -1-.

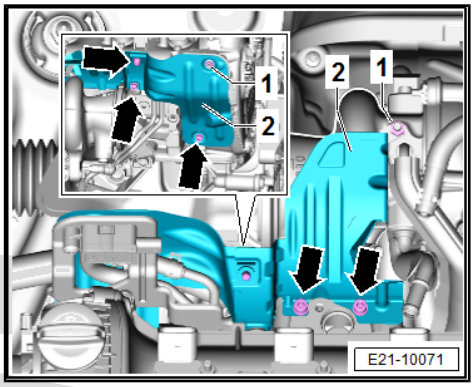

– Disconnect electrical connector -arrow-from pressure differential sender for particulate filter - G1037- .

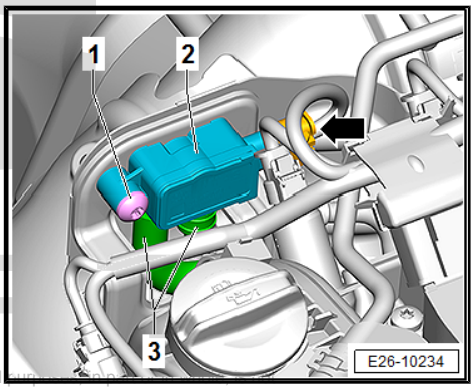

– Unscrew the bolts -arrows- and place the pressure lines together with the pressure differential sender for particulate filter - G1037- to the rear.

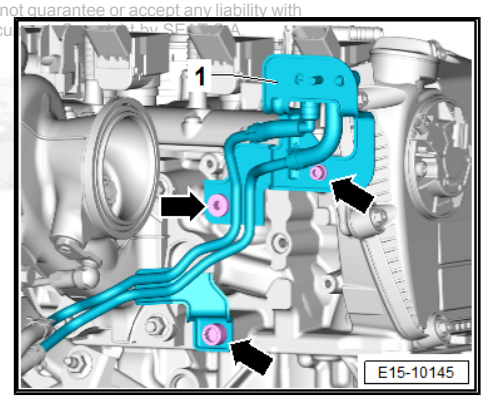

Continued for all vehicles

– Remove bracket -2- for turbocharger from below. To do this, unscrew bolt -1- and loosen bolt -3-.

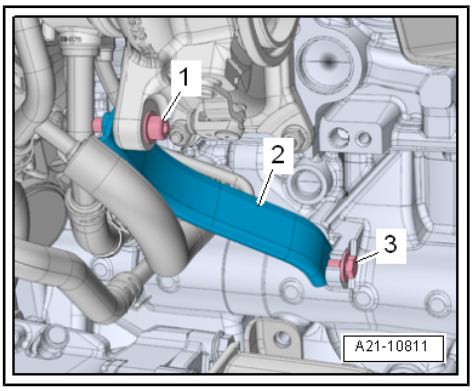

– Unscrew bolts -arrows-, and pull coolant pipe -2- off turbocharger -1-.

– Remove pendulum support ⇒ page 50 .

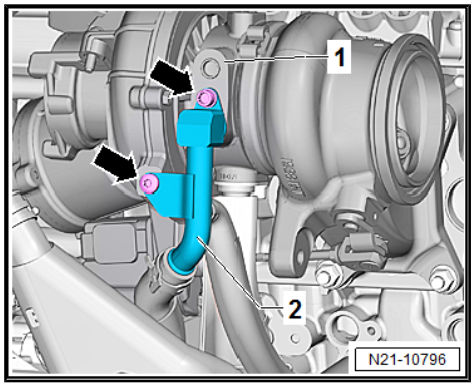

– Assemble engine support - T50015A- as shown in the diagram.

♦ Screw a bolt M8 x 30 mm -1- with a washer into the threaded hole of the subframe.

♦ Attach engine support - T50015A- -2- to support plate of positioner - T10533/2- -4-.

♦ Fasten engine support - T50015A- assembly kit -2- and support plate of positioner - T10533/2- -4- to the threaded hole of the gearbox using bolt M12 x 20 mm of positioner - T10533/4- -5-.

– By turning the spindle, the engine/gearbox unit is moved forwards until there is a small tension. Avoid collisions of components.

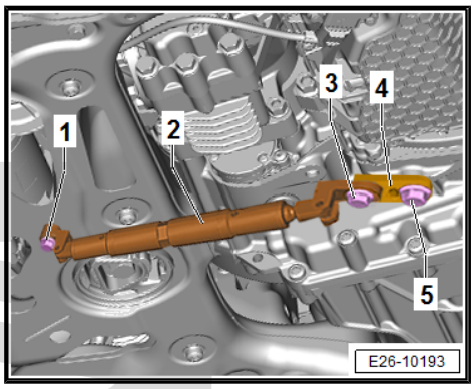

– Unscrew bolts -arrows-, and pull oil return pipe -2- off turbocharger -1-.

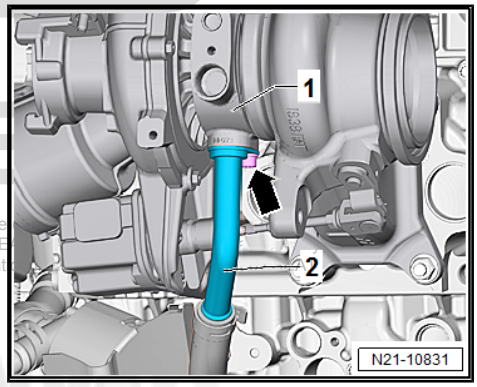

– Unscrew Lambda probe 1 before catalytic converter - GX10- -1- using tool from Lambda probe open ring spanner set - 3337- .

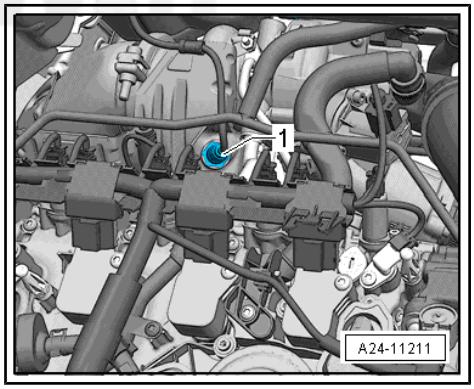

– Unscrew screw -1- and remove coolant supply line -2- of the exhaust gas turbocharger, carefully pivot hose and coolant supply line and place backwards.
– Unscrew bolts -arrows-, and pull oil supply pipe -4- off turbocharger -3-.
– Seal lines with suitable plugs from the engine bung set - VAS 6122- .

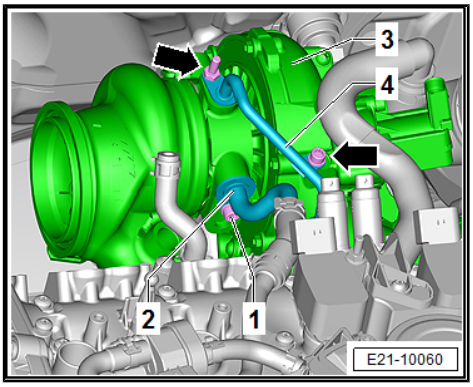

– Remove nuts -arrows-.

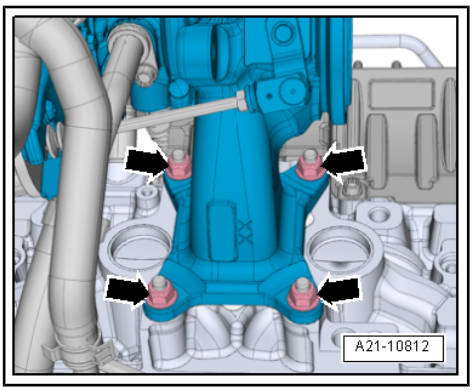

– Remove turbocharger from cylinder head, and remove it upwards -arrows-.

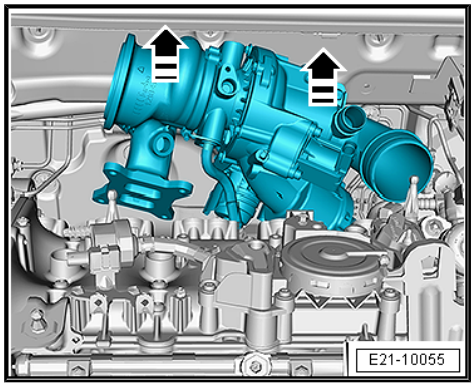

Fitting

Install in the reverse order of removal, observing the following:

Note

- *Renew seals, gaskets, O-rings and self-locking nuts.*
- *Check O-rings of the actuators for camshaft adjustment for damage. Undamaged O-rings can be reused.*
- *Lubricate turbocharger studs with high-temperature paste. For high-temperature, paste refer to ⇒ Electronic Parts Catalogue (ETKA) .*
- *Fill turbocharger with engine oil at connection for oil supply line.*
- *Hose connections and hoses for charge air system must be free of oil and grease before assembly.*
- *Secure all hose connections with the hose clips corresponding to original equipment ⇒ Electronic parts catalogue .*

– Install front exhaust pipe with catalytic converter ⇒ page 420 .

– Replenish coolant ⇒ page 240 .

– check oil level⇒ Maintenance ; Booklet 501 .

Note

- *After installing turbocharger, allow engine to idle for approx. 1 minute and do not rev up immediately to ensure turbocharger is supplied with oil.*
- *After new components have been installed (engine/short engine, cylinder head or turbocharger) the oil pressure control must be set to max. pressure for approx. 1000 km if the function is available in the engine control unit. This will compensate for the increased friction during run-in of new components, and a better transport of wear-related particles is guaranteed. To do this, connect vehicle diagnostic tester, switch on ignition, and select the following menu option:*
- *If available, select the function* `Engine run-in oil pressure`.

Specified torques

- ⇒ “1.1 Exploded view - turbocharger”, page 307
- ⇒ “3.1 Exploded view - air cleaner housing”, page 355
- ⇒ “8.1 Exploded view - Lambda probe”, page 387

1.3 Adjusting charge pressure positioner - V465-

Special tools and workshop equipment required

- Torque wrench - VAS 6854-

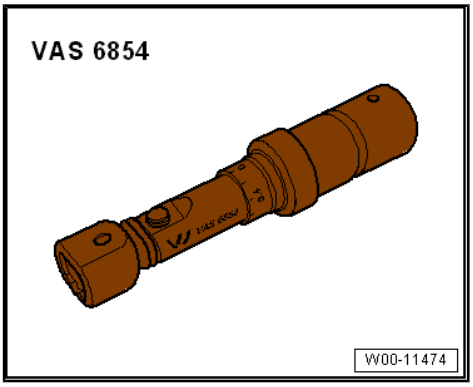

- Setting gauge - T40346-

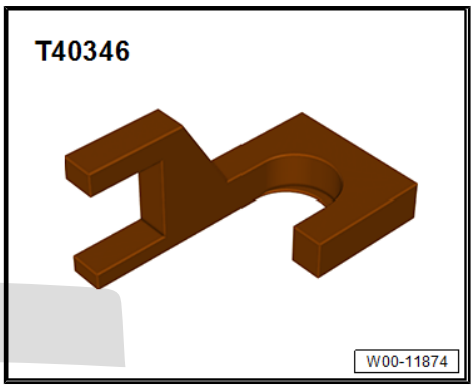

- Open-end spanner insert (10 mm) - V.A.G 1783/1-

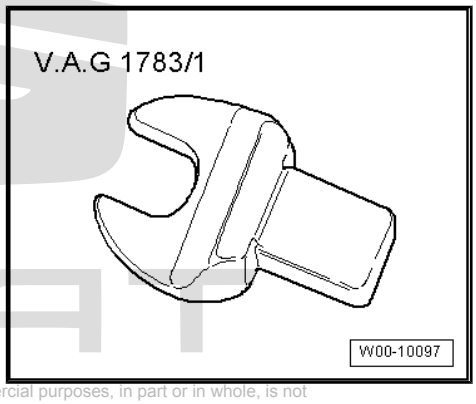

- Open-jaw spanner (5 mm)
- Vehicle diagnosis tester

Removing

– Unscrew bolt -2- and remove screw-type clip.

– Remove noise insulation ⇒ General body repairs, exterior; Rep. gr. 66 ; Noise insulation; Assembly overview - noise insulation .

– Remove nuts -1 and 3-.

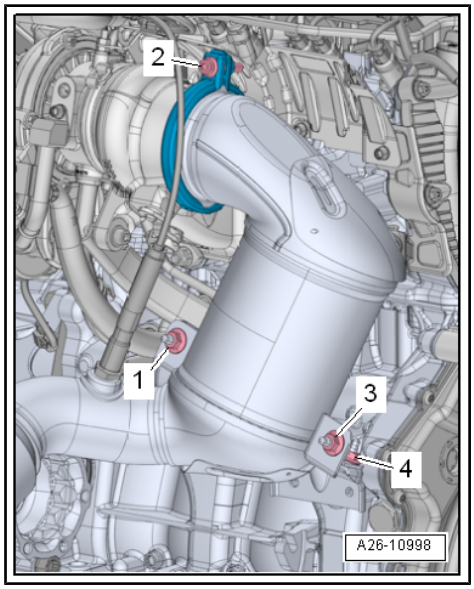

Note

Ignore -item 4-.

– Unscrew bolts -arrows-, and place catalytic converter to one side

– Switch on ignition and select the following menu item in the vehicle diagnostic and service information system :

♦ `0001 - Adjust charge pressure positioner V465`

– Follow instructions of vehicle diagnostic tester .

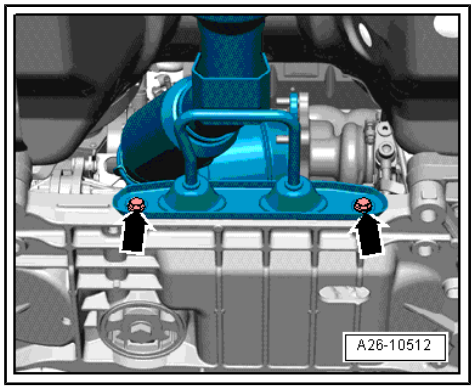

Adjusting

– Insert setting gauge - T40346- .

– Loosen lock nut -1-.

– Adjust linkage -arrow -of charge pressure positioner - V465- according to instructions on vehicle diagnostic tester .

– Tighten lock nut -1- to specified torque.

– Remove setting gauge - T40346- .

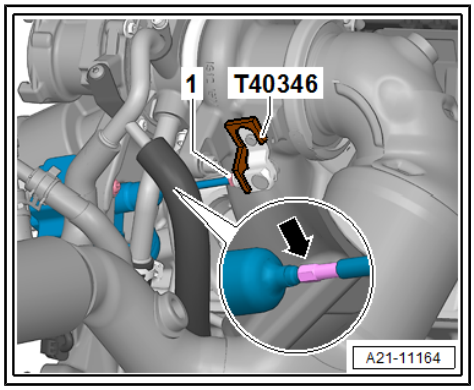

Specified torques

♦ ⇒ “1.1 Exploded view - turbocharger”, page 307

2 Supercharger air system:

2.1 Assembly overview - charge air system

Note

- *Installing screw-type clips for charge air hose connections ⇒ page 321 .*
- *Before carrying out tests or repairs, check all air pipes and air hoses to make sure they are firmly seated and not leaking.*
- *Observe rules for cleanliness ⇒ page 9 .*

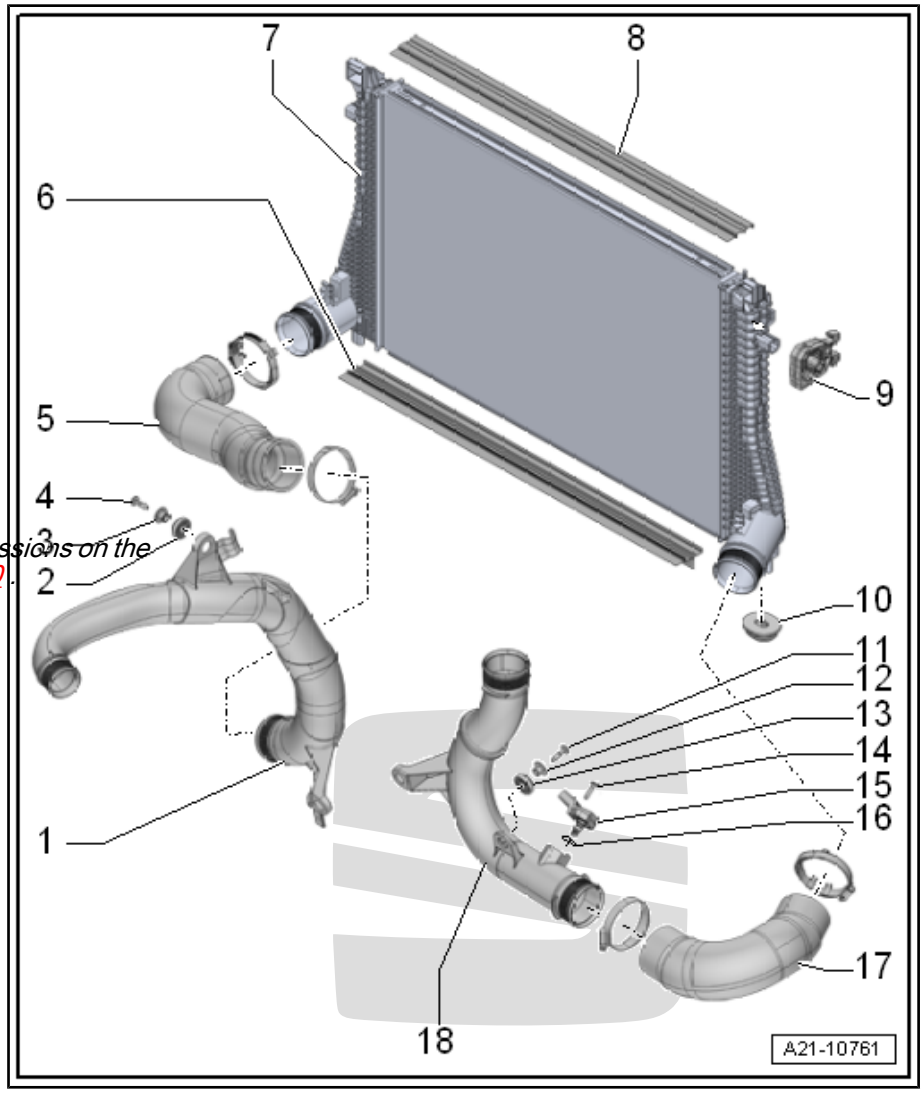

1 - Air intake pipe

2 - Grommet

3 - Spacer bush

4 - Bolt

- ❑ 7 Nm

5 - Air intake hose

- ❑ Fitting ⇒ page 321

6 - air duct

7 - Intercooler system

- ❑ Removing and fitting ⇒ page 321

Note

If there are slight impressions on the fins, refer to ⇒ page 10.

8 - air duct

9 - Bonded rubber bush

- ❑ For charge air cooler

10 - Bonded rubber bush

- ❑ For charge air cooler

11 - Bolt

- ❑ 7 Nm

12 - Spacer bush

13 - Grommet

14 - Bolt

- ❑ 5 Nm

15 - Charger pressure sensor - G31-

- ❑ Removing and fitting ⇒ page 326

16 - O-ring

- ❑ Renew after removing

17 - Air intake hose

- ❑ Fitting ⇒ page 321

18 - Air intake pipe

2.2 Exploded view - hose connections for charge air system

Fitting hose connections with fluted union

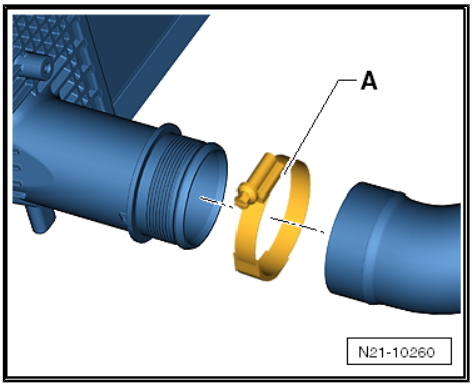

Note

The screw-type clips -A- on the charge air pipes must always be tightened to 5.5 Nm. If the torque is too low or too high, the charge air hose may slip off the charge air pipe during vehicle operation.

- Check all air hoses and pipes for firm seating and leaks before carrying out tests or repairs.
- Clean connection couplings, pipe lines and air intake hoses before installation. They must be free of oil and grease.
- Secure all hose connections with the hose clips corresponding to original equipment ⇒ Electronic parts catalogue .
- Spray the worm screws of the used hose clips with penetrating spray before installing.

2.3 Charged air cooler: removing and fitting

Special tools and workshop equipment required

♦ Engine bung set - VAS 6122-

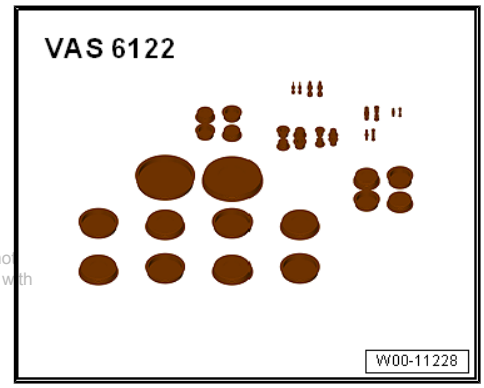

♦ Drip tray for workshop hoist - VAS 6208-

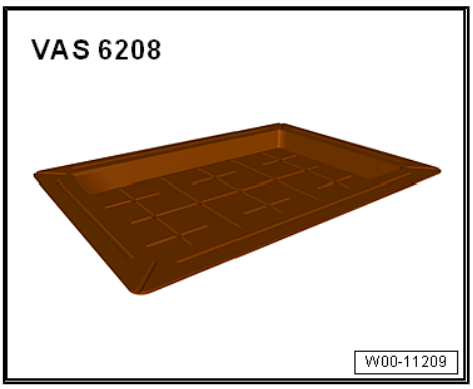

♦ Wedge - 3409-

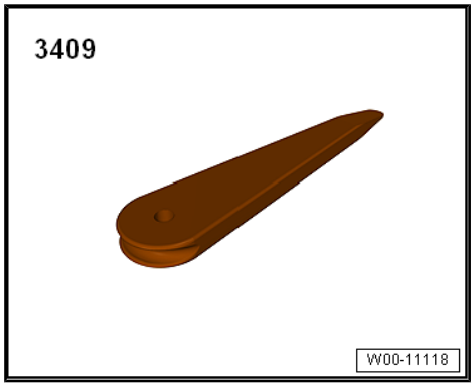

Removing

– Drain coolant ⇒ page 239 .

– Remove radiator cowl ⇒ page 300 .

Vehicles with radiator, variant 1

– Use the removal wedge to press both sides of locking tab -1- away from the engine compartment - 3409- and push the radiator -in the direction of the arrow-.

– Pull radiator out of mountings at bottom.

– Remove radiator from water radiator for charge air cooling circuit.

– Remove coolant radiator upwards.

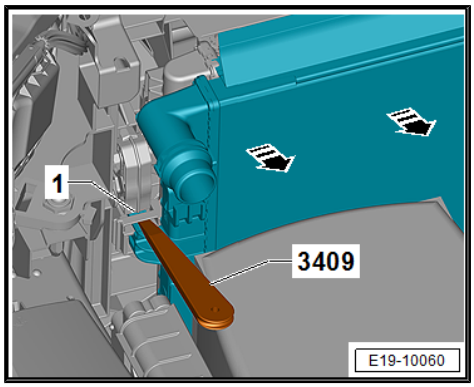

Continued for all vehicles

– Remove front bumper cover ⇒ General body repairs, exterior; Rep. gr. 63 ; Front bumper; Removing and installing bumper cover .

– Remove right and left headlights ⇒ Electrical system; Rep. gr. 94 ; Headlights; Removing and installing headlights

– Loosen hose clips -arrows-, and remove charge air hose -A-.

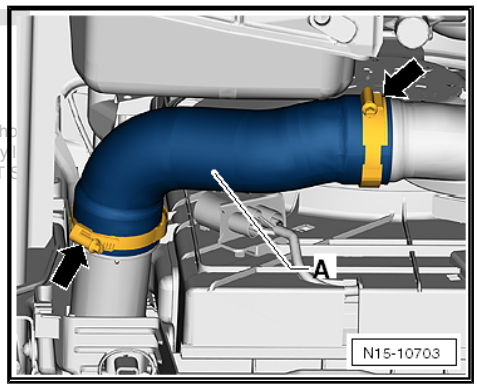

– Release hose clip -1- and -2-, and remove right charge air hose.

– Seal off open pipes/lines and connections immediately with clean plugs from engine sealing cap set - VAS 6122- .

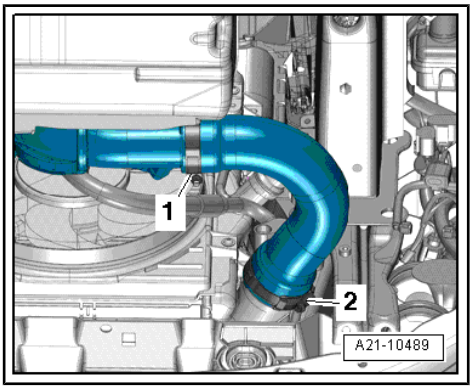

Vehicles with bearing support for charge-air cooler, clipped in.

– Release catches -arrows- of bearing support for charge-air cooler -1- on left and right, or pinch them off using side cutters.

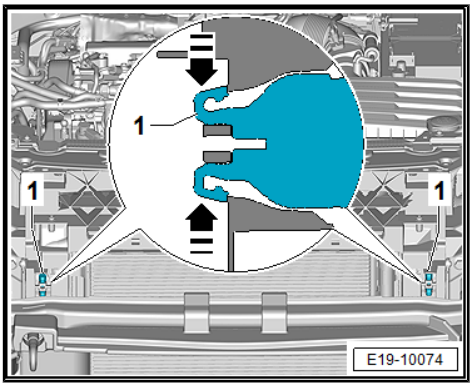

Note

The bearing support for charge-air cooler is re-used during installation. It will then be bolted to lock carrier. Screws ⇒ ETKA (electronic spare parts catalogue) .

Vehicles with bearing support for charge-air cooler, bolted.

– Unscrew the screws -2- of the bearing support for charge-air cooler -1- right and left.

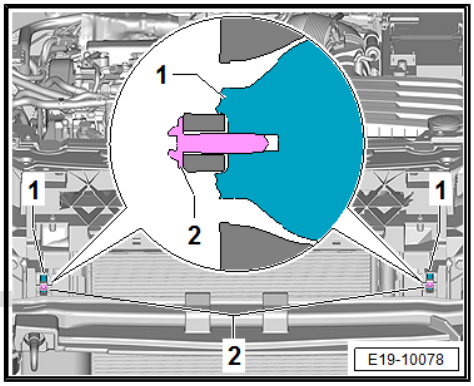

Continued for all vehicles

– Press cooler on the top edge in the direction of the engine.

– Lift charge-air cooler out of the lower supports and press backwards.

– Press catches -1- on both sides in -direction of arrow A- to release them.

– Pull the condenser -3- upwards in -direction of arrow B-, and detach it from charge-air cooler -2-.

– Tie up condenser on lock carrier.

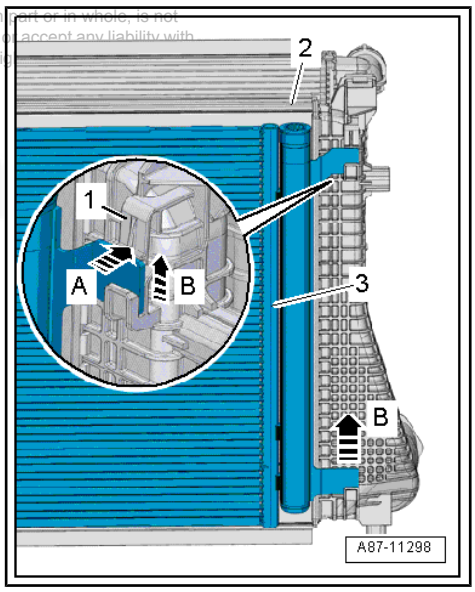

– Lift charge-air cooler -1- at bottom out of the bearing supports -arrows-.

– Remove the intercooler.

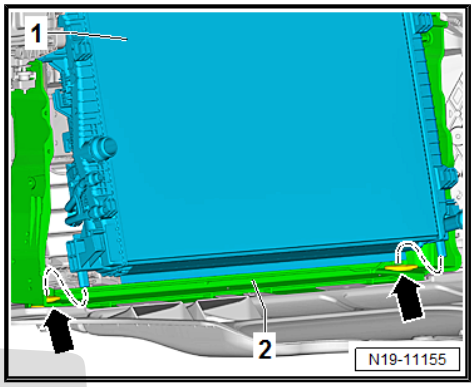

Fitting

Install in the reverse order of removal, observing the following:

Note

If there are minor dents in the fins, refer to respective instructions *⇒ page 10* .

– Insert radiator with charge air cooler -1- in mountings -arrows- in lock carrier. Pull down lock carrier in area of mountings if necessary.

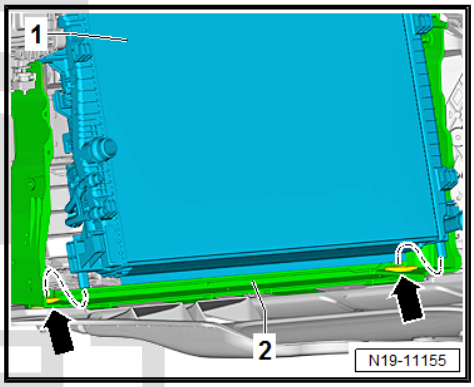

– Place the condenser -3- in the installation position.

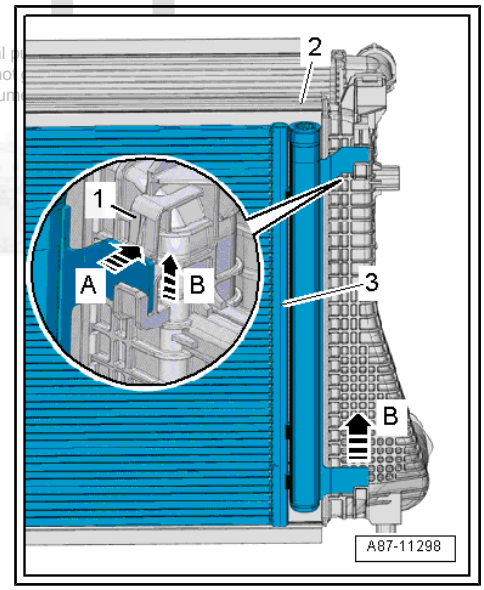

Installation position of the bearing support for the charge-air cooler

– Mount the charge-air cooler bearing support -1- right and left on the charge-air cooler. When doing so, note the installation position -arrow-.

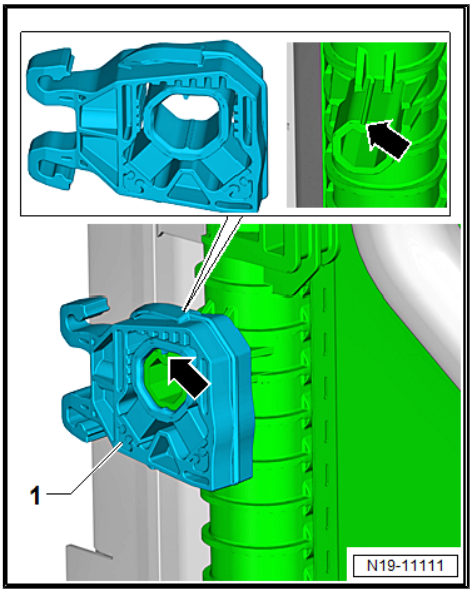

– Attach charge air cooler to lock carrier. Ensure proper seating of radiator mountings -1- in lock carrier.

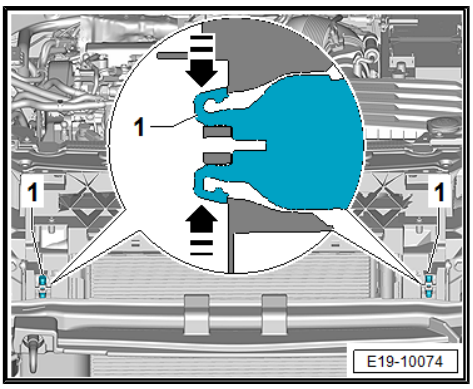

Vehicles with bearing support for charge-air cooler, bolted.

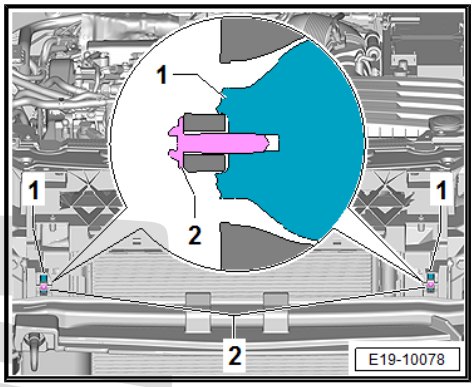

– Use bolts to secure radiator mountings, whose fasteners have been pinched off, to lock carrier. Screws -2- ⇒ ETKA (electronic spare parts catalogue) .

• Tightening torque: 5 Nm

Continued for all vehicles

– Install lower air ducts on both sides from lock carrier.

– Install radiator cowl ⇒ page 300 .

– Fit charge air hose connections ⇒ page 321

– Connect coolant hose with plug-in connector ⇒ page 292 .

– Install headlight ⇒ Electrical system; Rep. gr. 94 ; Removing and installing headlights .

– Install front bumper cover ⇒ General body repairs, exterior; Rep. gr. 63 ; Front bumper; Removing and installing front bumper .

– Replenish coolant ⇒ page 244 .

Note

- *Hose connections and hoses for charge air system must be free of oil and grease before assembly.*
- *Secure all hose connections with the correct type of hose clips (same as original equipment) ⇒ Electronic parts catalogue (ETKA) .*
- *To ensure that the charge air hoses can be properly secured at their connections, spray rust remover onto the worm thread of used hose clips before installing.*

Specified torques

- ⇒ “4.1 Exploded view - radiator/radiator fans”, page 291
- ⇒ “4.3 Exploded view - radiator cowl and radiator fans”, page 295
- ⇒ “2.1 Assembly overview - charge air system”, page 319

2.4 Removing and installing charge pressure sender - G31-

Removing

– Remove noise insulation ⇒ General body repairs, exterior; Rep. gr. 66 ; Noise insulation; Assembly overview - noise insulation .

– Pull off connector -2-.

– Remove bolts -1- and pull charge pressure sender - G31- out of air pipe.

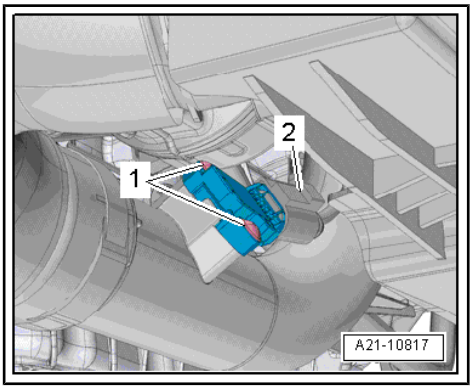

Fitting

Install in the reverse order of removal, observing the following:

Note

Renew O-ring.

Specified torques

- ⇒ “2.1 Assembly overview - charge air system”, page 319
- Assembly overview - noise insulation ⇒ General body repairs, exterior; Rep. gr. 66 ; Noise insulation; Assembly overview - noise insulation .

2.5 Checking charge air system for leaks

Special tools and workshop equipment required

- Charge air system tester - V.A.G 1687-

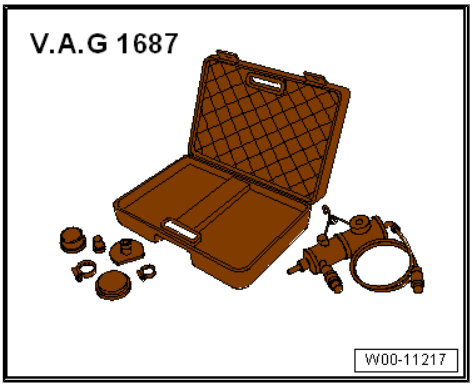

- Engine bung set - VAS 6122-

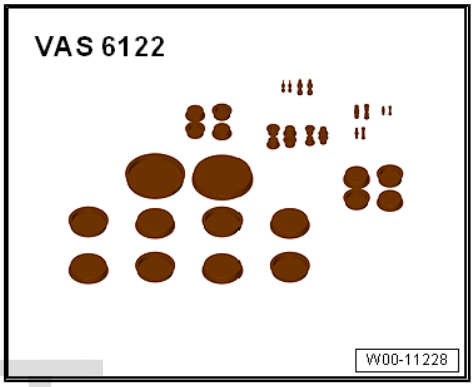

Operation process

– Release hose clips -1 and 2-, and remove air pipe.

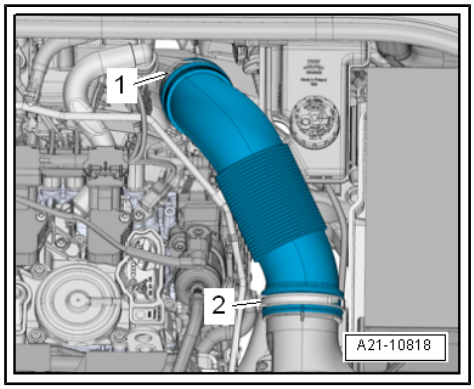

– Pull off breather pipe for crankcase breather -arrow-.

– Seal connection using a sealing plug -1- from the engine bung set and secure it using a hose clip -2-.

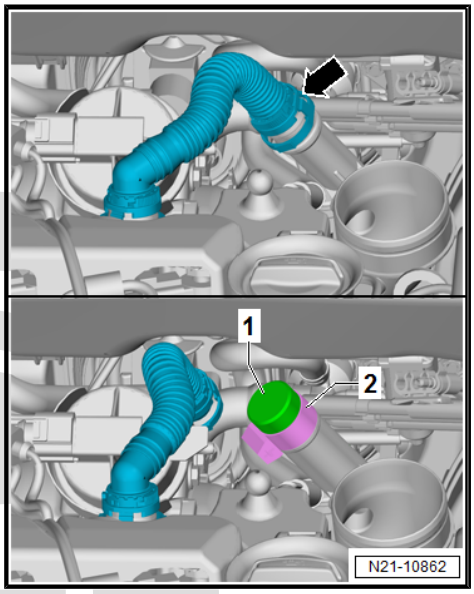

– Connect the adapter - V.A.G 1687/10- with -V.A.G 1687/14- to the exhaust gas turbocharger.

– Connect charge air system tester - V.A.G 1687- to adapter.

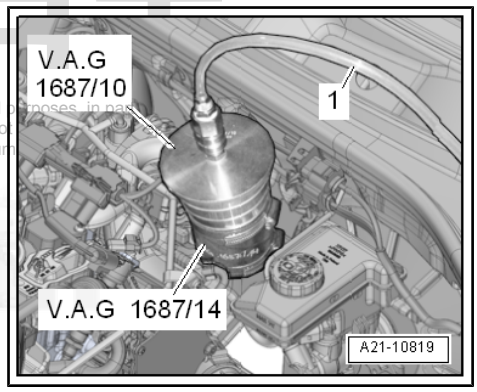

Prepare charge air system tester - V.A.G 1687- as follows:

– Pull pressure control valve -2- upwards, unscrew it completely, and close valves -3- and -4-.

– Using a commercially available connection piece, connect charge air system tester - V.A.G 1687- to compressed air -1-.

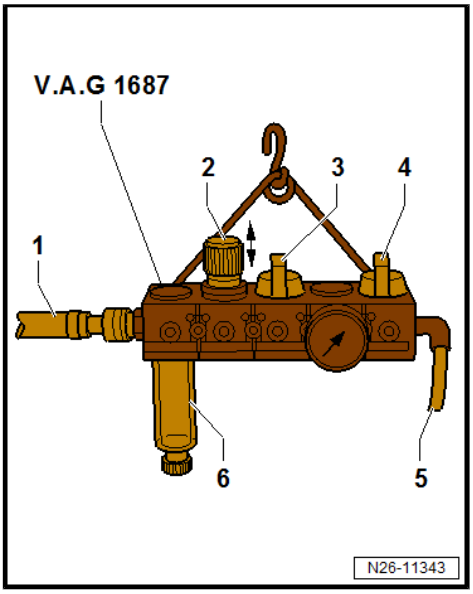

Note

If there is water in the inspection glass, -6- drain it via the drain plug.

– Open valve -3-.

– Adjust pressure to 0.5 bar with pressure regulating valve -2-.

– Open valve -4- and wait until test circuit is full. If necessary, adjust pressure to 0.5 bar again.

– Check the charge air system for leaks by hearing, touching, with commercially available leak detector spray or using ultrasonic tester - V.A.G 1842- .

Note

- *A small amount of air escapes through the valves and enters the engine. Therefore a holding pressure test is not possible.*
- *How to use the ultrasonic tester - V.A.G 1842- ⇒ operating instructions .*
- *Release pressure in test circuit by detaching hose coupling from adapter before removing adapter.*

Assembly

Installation is in the reverse sequence of removal.

2.6 Removing and installing air intake pipe between turbocharger and charge air cooler

– Remove noise insulation ⇒ General body repairs, exterior; Rep. gr. 66 ; Noise insulation; Assembly overview - noise insulation .

– Loosen hose clips -arrows-, and remove charge air hose -A-.

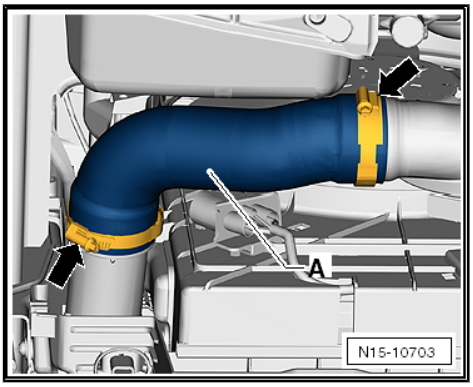

– Lay aside wiring harness -1- and -2-.
– Remove bolt -3-.
– For reasons of space, remove the air filter housing together with the intake hose ⇒ page 356 .

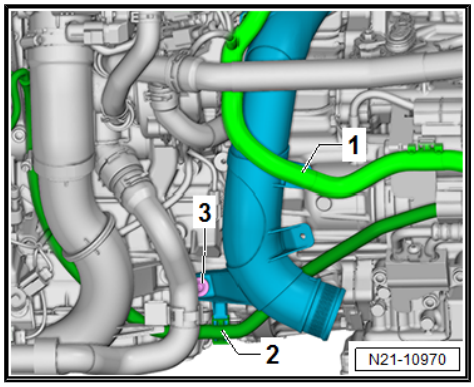

– Move clear wiring harnesses -1- at air intake pipe.
– Unfasten screw-type clip -2-.
– Remove bolt -3-.
– Remove air intake pipe -4- upwards.

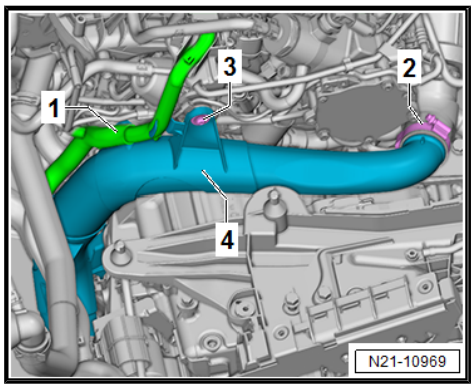

Fitting

– Install in reverse order of removal, observing the following:

Specified torques ⇒ page 319

24 – Mixture preparation - injection

1 Injection system

⇒ "1.1 Overview of fitting locations - injection system", page 331

1.1 Overview of fitting locations - injection system

Components A to H are not shown in the exploded view.

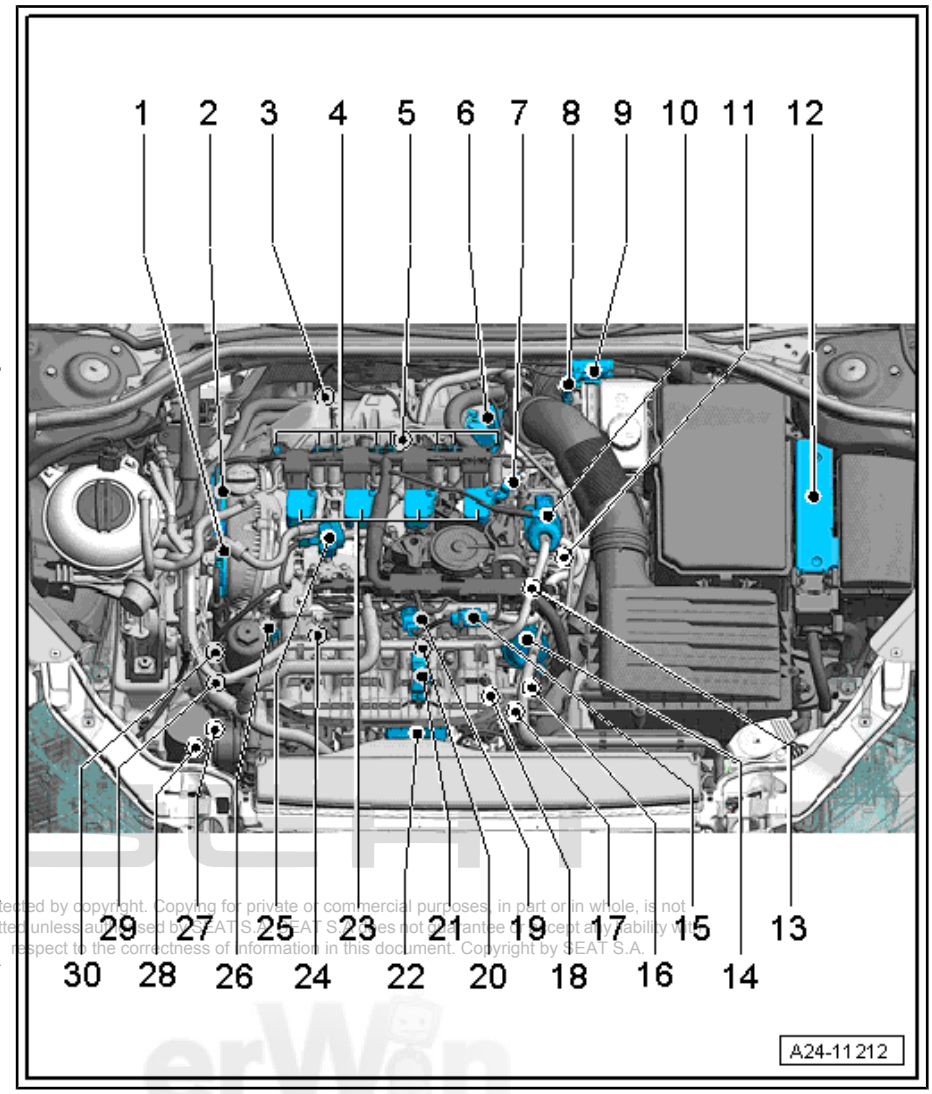

1 - Valve 1 for variable distribution - N205-

- ❑ Location ⇒ page 339
- ❑ Removing and fitting ⇒ page 186

2 - Exhaust camshaft control valve 1 - N318-

- ❑ Location ⇒ page 339
- ❑ Removing and fitting ⇒ page 153

3 - Lambda probe 1 after catalytic converter - GX7-

- ❑ comprising:

  Lambda probes after the catalytic converter - G130-

  Lambda probe heater 1 after catalytic converter - Z29-

- ❑ Location ⇒ page 341
- ❑ Removing or installing ⇒ page 389

4 - Exhaust camshaft

- ❑ Exhaust cam actuator B for cylinder 1 - N581-
- ❑ Exhaust cam actuator A for cylinder 1 - N580-
- ❑ Exhaust cam actuator A for cylinder 2 - N588-
- ❑ Exhaust cam actuator B for cylinder 2 - N589-
- ❑ Exhaust cam actuator B for cylinder 3 - N597-
- ❑ Exhaust cam actuator A for cylinder 3 - N596-
- ❑ Exhaust cam actuator A for cylinder 4 - N604-
- ❑ Exhaust cam actuator B for cylinder 4 - N605-
- ❑ Location ⇒ page 336
- ❑ Removing and fitting ⇒ page 153

5 - Lambda sensor 1 before catalytic converter - GX10-

- ❑ comprising:

  Lambda sensor - G39-

Lambda probe heater - Z19-

- ❑ Location ⇒ page 341
- ❑ Removing and fitting ⇒ page 388

6 - Turbocharger air recirculation valve - N249- and charge pressure positioner - V465-

- ❑ Components fitted directly on turbocharger
- ❑ Installation location position sender for charge pressure positioner - V465- ⇒ page 341
- ❑ Fitting location turbocharger air recirculation valve - N249- ⇒ page 342
- ❑ Removing and fitting ⇒ page 307

7 - Hall sender 3 - G300-

- ❑ Location ⇒ page 336
- ❑ 9 Nm
- ❑ Removing and fitting ⇒ page 455

8 - Brake light switch - F- and Brake pedal switch - F47-

- ❑ Location ⇒ page 335
- ❑ Removing and installing ⇒ Brake system; Rep. gr. 45 ; Overview of fitting locations; Overview of fitting locations - ABS/ESP

9 - Electrical connectors

- ❑ For Lambda probe 1 before catalytic converter - GX10- .
- ❑ For Lambda probe 1 - GX7- (after catalytic converter)
- ❑ Location ⇒ page 341

10 - High-pressure pump with fuel metering valve - N290- .

- ❑ Location ⇒ page 339
- ❑ ⇒ page 380
- ❑ Removing and fitting ⇒ page 381

11 - Coolant temperature sensor - G62-

- ❑ Location ⇒ page 339
- ❑ Removing and fitting ⇒ page 268
- ❑ 9 Nm

12 - Engine control unit - J623-

- ❑ Removing and fitting ⇒ page 376

13 - Hall sensor - G40-

- ❑ Location ⇒ page 337
- ❑ Removing and fitting ⇒ page 455
- ❑ 9 Nm

14 - Vacuum unit for intake manifold flaps

- ❑ Location ⇒ page 338

15 - Connector for injectors (intake manifold)

16 - Intake manifold flap valve - N316-

- ❑ Location ⇒ page 338

17 - Engine speed sensor - G28-

- ❑ Location ⇒ page 339
- ❑ Oil seal
- ❑ Replace bolt
- ❑ 4 Nm and turn 45° further
- ❑ Removing and fitting ⇒ page 456

18 - Electrical connectors for

- ❑ Knock sensor 1 - G61-
- ❑ Suction pipe throttle flap - N316-
- ❑ Fuel pressure sensor - G247-
- ❑ Intake manifold flap potentiometer - G336-
- ❑ Hall sensor - G40-
- ❑ Injectors (combustion chamber) N30 ... N33
- ❑ Location ⇒ page 338

19 - Fuel pressure sender (low pressure) - G410-

- ❑ Fuel pressure sender for low pressure - G410- must be installed with an adapter
- ❑ 15 Nm
- ❑ Location ⇒ page 337
- ❑ Removing and fitting ⇒ page 373

20 - Knock sensor 1 - G61-

- ❑ To remove, first remove coolant pump with thermostat
- ❑ 20 Nm
- ❑ Removing and fitting ⇒ page 454

21 - Intake manifold sender - GX9-

- ❑ comprising:

  Intake air temperature sensor - G42-

  Intake manifold pressure sender - G71-
- ❑ Location ⇒ Fig. ""View from above"" , page 337
- ❑ Removing and fitting ⇒ page 374

22 - Throttle valve control mechanism - GX3-

- ❑ comprising:

  Throttle valve drive (electric power control) - G186-

  Throttle valve drive angle sender 1 (electric power control) - G187-

Throttle valve drive angle sender 2 (electric power control) - G188-

- ❑ After replacing or removing, the throttle valve module - GX3- must be adapted to the engine control unit - J623- . ⇒ Vehicle diagnostic tester
- ❑ Location ⇒ page 340

23 - Ignition coils with output stages

- ❑ Location ⇒ page 337
- ❑ Removing and fitting ⇒ page 452

24 - Fuel pressure sensor - G247-

- ❑ Location ⇒ page 338
- ❑ 27 Nm
- ❑ Removing and fitting ⇒ page 369

25 - Activated charcoal filter solenoid valve 1 - N80-

- ❑ Location ⇒ page 336

26 - Intake manifold flap potentiometer - G336-

- ❑ Location ⇒ page 338

27 - Coolant temperature sender at the radiator outlet - G83-

- ❑ Location ⇒ page 340
- ❑ Removing and fitting ⇒ page 268

28 - Supercharging pressure sender - G31-

- ❑ Location ⇒ page 340
- ❑ Removing and fitting ⇒ page 326

29 - Valve for oil pressure control - N428-

- ❑ Location ⇒ page 340
- ❑ Removing and fitting ⇒ page 231

30 - Oil pressure switch - F1- , oil pressure switch for reduced oil pressure - F378- and piston cooling jet control valve - N522-

- ❑ Location ⇒ page 340
- ❑ Removing, installing and testing ⇒ page 227

A - Injectors, direct injection

- ❑ Location ⇒ page 337
- ❑ Cylinder 1 injector - N30-
- ❑ Cylinder 2 injector - N31-
- ❑ Cylinder 3 injector - N32-
- ❑ Cylinder 4 injector - N33-
- ❑ Removing and fitting ⇒ page 346

B - Injectors, intake manifold injection

- ❑ Location ⇒ page 337
- ❑ Cylinder 1 injector 2 - N532-
- ❑ Cylinder 2 injector 2 - N533-
- ❑ Cylinder 3 injector 2 - N534-
- ❑ Cylinder 4 injector 2 - N535-
- ❑ Removing and fitting ⇒ page 349

C - Fuel pump control unit - J538-

- ❑ Location ⇒ page 336
- ❑ Removing and installing ⇒ Rep. gr. 20 ; Fuel pump

D - Clutch position sender - G476-

- ❑ Only fitted on vehicles with manual gearbox
- ❑ Location ⇒ page 336

E - Accelerator pedal module - GX2-

- ❑ comprising:

  Accelerator position sender - G79-

  Sender 2 for the accelerator pedal position - G185-
- ❑ Location ⇒ Fig. ““ Accelerator pedal module -GX2- ”“ , page 335
- ❑ On the accelerator pedal (both senders are located in the housing)
- ❑ Removing and installing ⇒ Rep. gr. 20 ; Accelerator mechanism; Assembly overview - accelerator pedal module .

F - Fan control unit - J293-

- ❑ Incorporated in radiator fan

G - Stage 3 oil pressure switch - F447-

- ❑ Location ⇒ page 338
- ❑ Removing, installing and testing ⇒ page 226

H - Left electrohydraulic engine mounting solenoid valve - N144- and right electrohydraulic engine mounting solenoid valve - N145-

- ❑ Not installed in all vehicles (depends on gearbox type)

Accelerator pedal module - GX2-

2 - Electrical connector for accelerator pedal module

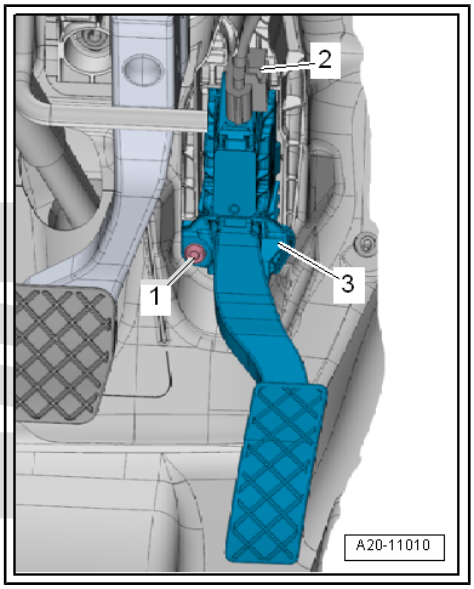

Note

The accelerator position sender - G79- and accelerator position sender 2- - G185- are integrated in the accelerator pedal module and cannot be renewed individually.

Installation location of the brake pedal switch - F- / brake pedal switch - F63- and of the vacuum sensor - G608-

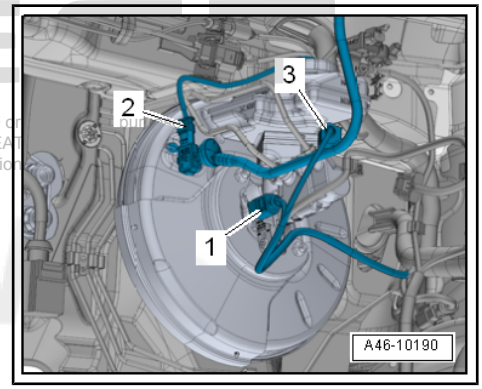

- ♦ On brake servo in engine compartment.

1 - Brake light switch - F- / Brake pedal switch - F63-

2 - Vacuum sender - G608-

Clutch position sender - G476- -2-

- On acceleration pedal bracket -arrow-.

Removing and installing ⇒ Rep. gr. 30 ; Clutch mechanism

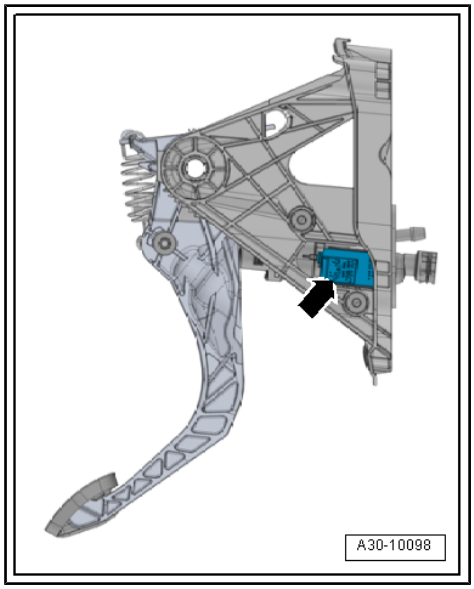

Fuel pump control unit - J538-

1 - Support plate

2 - Fuel pump control unit - J538-

3 - Electric connector

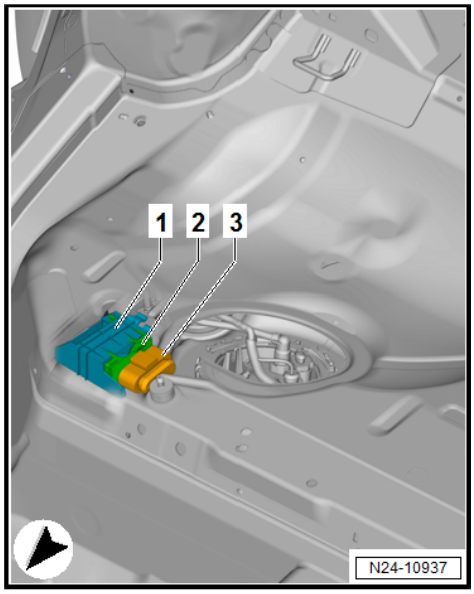

Exhaust camshaft

1 - Exhaust cam actuator B for cylinder 1 - N581-

2 - Exhaust cam actuator A for cylinder 1 - N580-

3 - Exhaust cam actuator A for cylinder 2 - N588-

4 - Exhaust cam actuator B for cylinder 2 - N589-

5 - Exhaust cam actuator B for cylinder 3 - N597-

6 - Exhaust cam actuator A for cylinder 3 - N596-

7 - Exhaust cam actuator A for cylinder 4 - N604-

8 - Exhaust cam actuator B for cylinder 4 - N605-

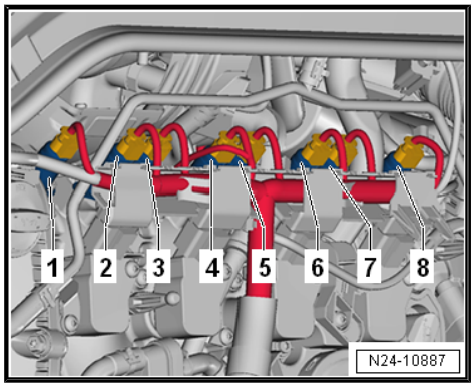

Ignition coils with output stages

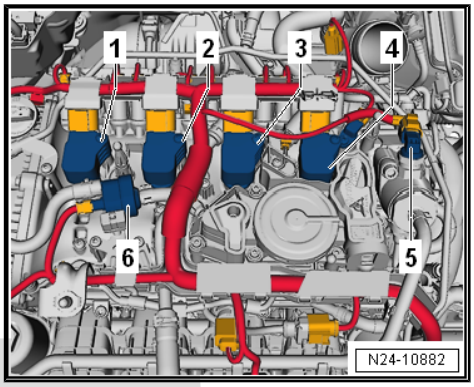

1 - Ignition coil 1 with output stage - N70-
2 - Ignition coil 2 with output stage - N127-
3 - Ignition coil 3 with output stage - N291-
4 - Ignition coil 4 with output stage - N292-
5 - Fuel metering valve - N290-
6 - Activated charcoal filter solenoid valve 1 - N80-

Injectors (combustion chamber)

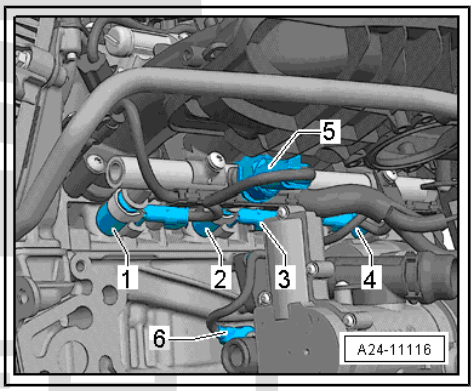

1 - Injector, cylinder 1 - N30-
2 - Injector, cylinder 2 - N31-
3 - Injector, cylinder 3 - N32-
4 - Injector, cylinder 4 - N33-
5 - Fuel pressure sensor - G247-
6 - Knock sensor 1 - G61-

Injectors, intake manifold injection

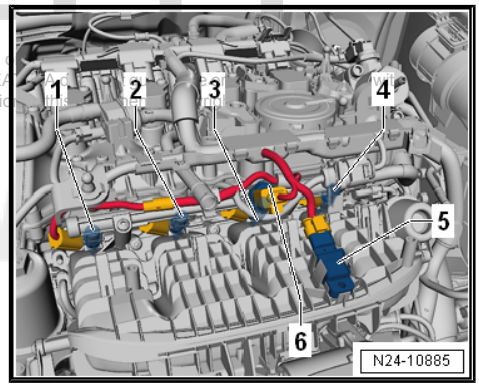

1 - Injector 2, cylinder 1 - N532-
2 - Injector 2, cylinder 2 - N533-
3 - Injector 2, cylinder 3 - N534-
4 - Injector 2, cylinder 4 - N535-
5 - Intake manifold sender - GX9-
6 - Fuel pressure sender (low pressure) - G410-

View from above

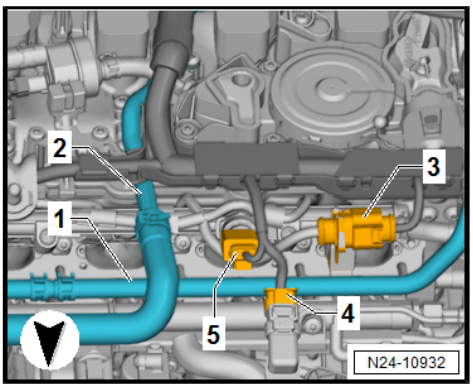

1 - Fuel supply line
2 - Coolant line
3 - Electrical connector for intake manifold injectors, MPI
4 - Intake manifold sender - GX9-
5 - Fuel pressure sender (low pressure) - G410-

Fuel pressure sender in high-pressure system

1 - Fuel pressure sensor - G247-

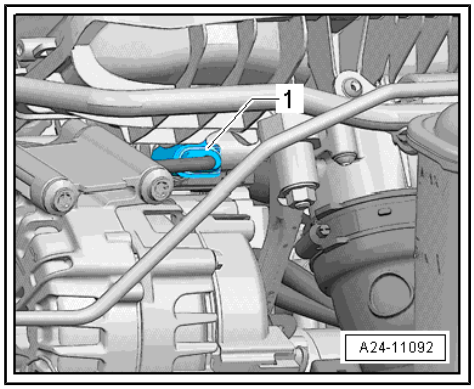

Intake manifold change-over

1 - Vacuum unit for intake manifold flaps

2 - Intake manifold flap valve - N316-

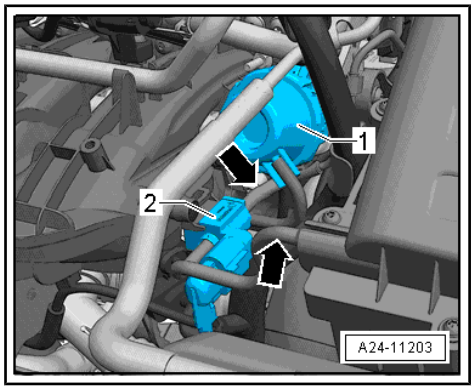

Intake manifold flap potentiometer - G336- -1-

Bend aside retaining tabs to allow for pulling potentiometer out of intake manifold

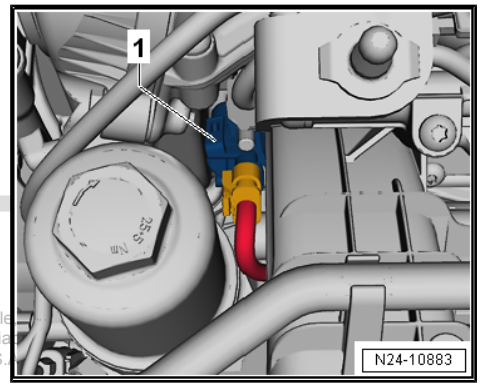

Electrical connectors

1 - for combustion chamber injectors, FSI

2 - For knock sensor 1 - G61-

3 - Stage 3 oil pressure switch - F447-

4 - For intake manifold flap valve - N316- , fuel pressure sender - G247- , intake manifold flap potentiometer - G336- , coolant temperature sender - G62- and Hall sender - G40-

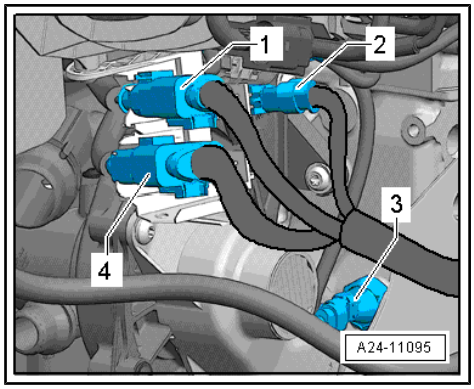

High-pressure pump and Hall sender

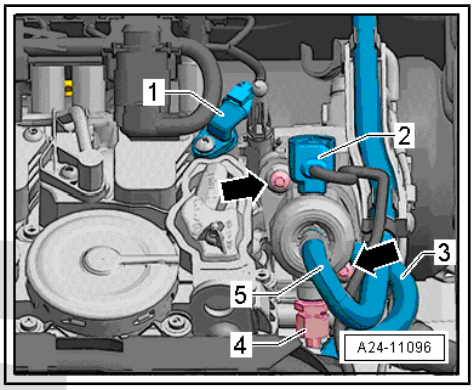

1 - Hall sender 3 - G300-

2 - Fuel metering valve - N290-

3 - Fuel supply line to fuel rail of intake manifold injectors, MPI

4 - Fuel supply line to fuel rail of direct injection injectors, FSI

5 - Fuel supply pipe from fuel tank

Flechas - -Arrows- denote securing bolts

Engine speed sender - G28- -1-

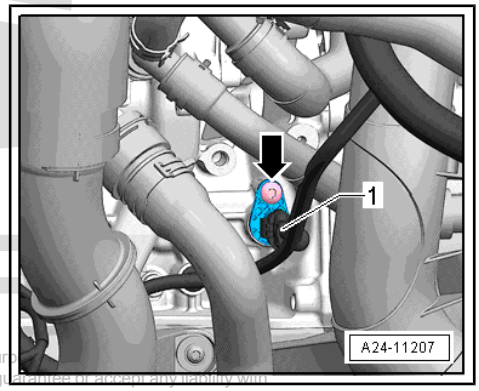

Valves for camshaft adjustment

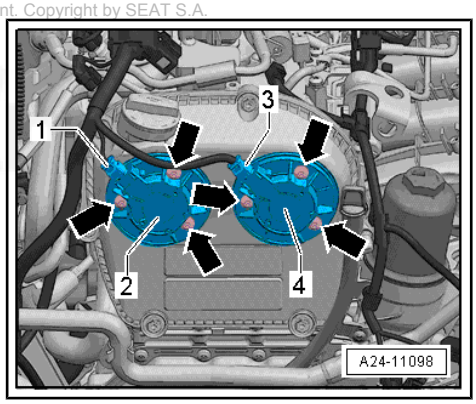

1 - Electrical connector for exhaust camshaft control valve 1 - N318-

2 - Exhaust camshaft control valve 1 - N318-

3 - Electrical connector for camshaft control valve 1 - N205-

4 - Valve 1 for variable distribution - N205-

Coolant temperature sensor - G62-

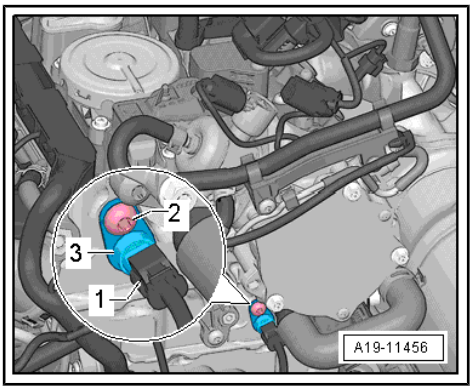

1 - Electrical connector for coolant temperature sender - G62-

2 - Bolt

3 - Coolant temperature sensor - G62-

Coolant temperature sender at the radiator outlet - G83-

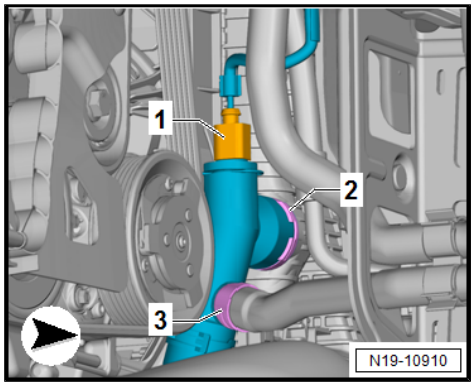

Charge air pressure sender - G31- -2-

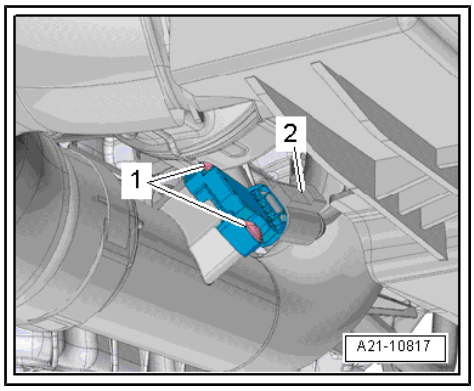

Oil pressure switch

1 - Electrical connector for oil pressure switch - F1-

2 - Oil pressure switch - F1-

3 - Electrical connector for oil pressure switch for reduced oil pressure - F378-

4 - Oil pressure switch for reduced oil pressure - F378-

5 - Electrical connector for piston cooling jet control valve - N522-

6 - Bolt

7 - Piston cooling jet control valve - N522-

Removing and installing ⇒ page 223 .

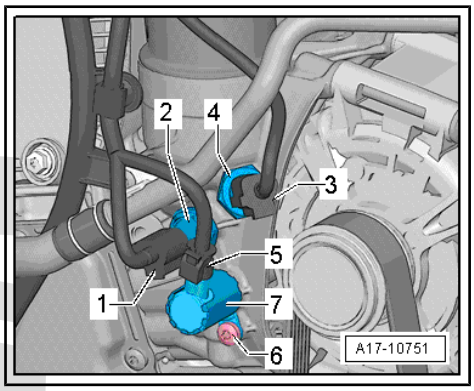

Valve for oil pressure control - N428- -3-

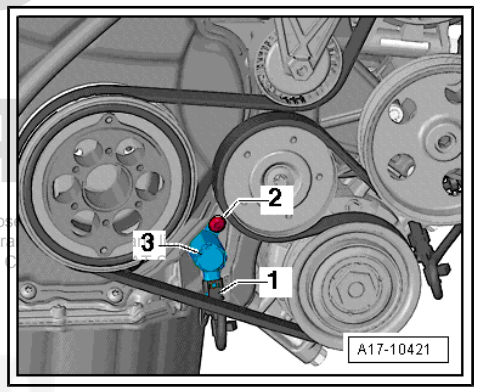

Lambda probes:

1 - Electrical connector for Lambda probe 1 after catalytic converter - GX7-

2 - Electrical connector from the Lambda probe 1 before catalytic converter - GX10-

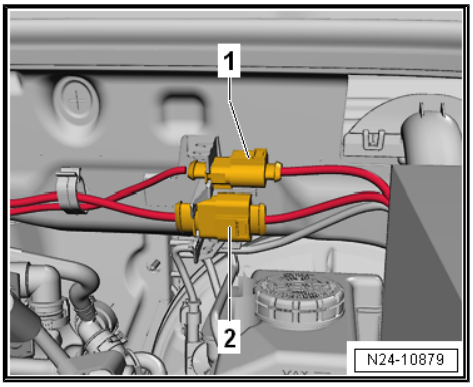

Lambda probe 1 before catalytic converter - GX10- -1-

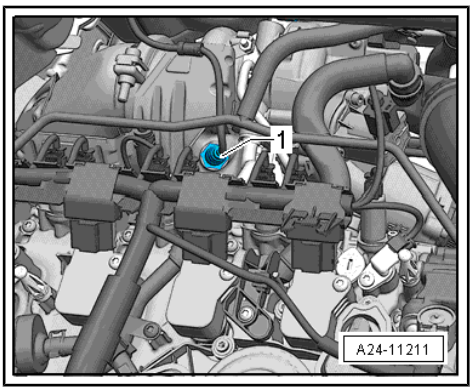

Lambda probe 1 after catalytic converter - GX7- -1-

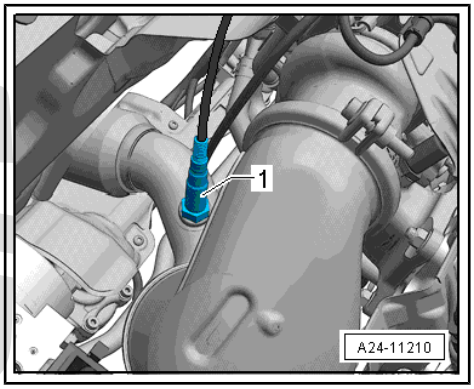

Charge pressure positioner - V465- -1-

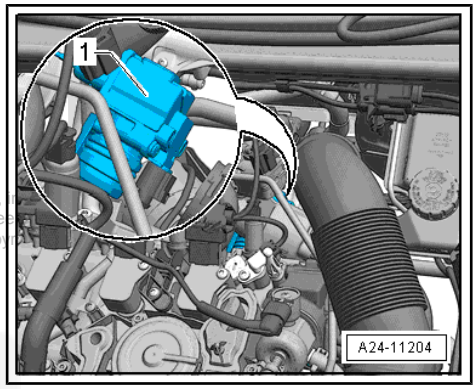

Turbocharger air recirculation valve - N249- -1-

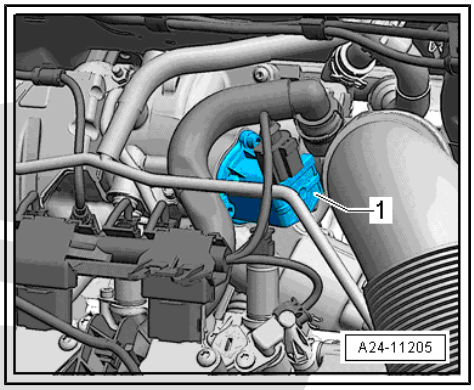

2 Injectors

2.1 Assembly overview - fuel rail with injectors

2.1.1 Assembly overview - fuel rail with injectors, direct injection

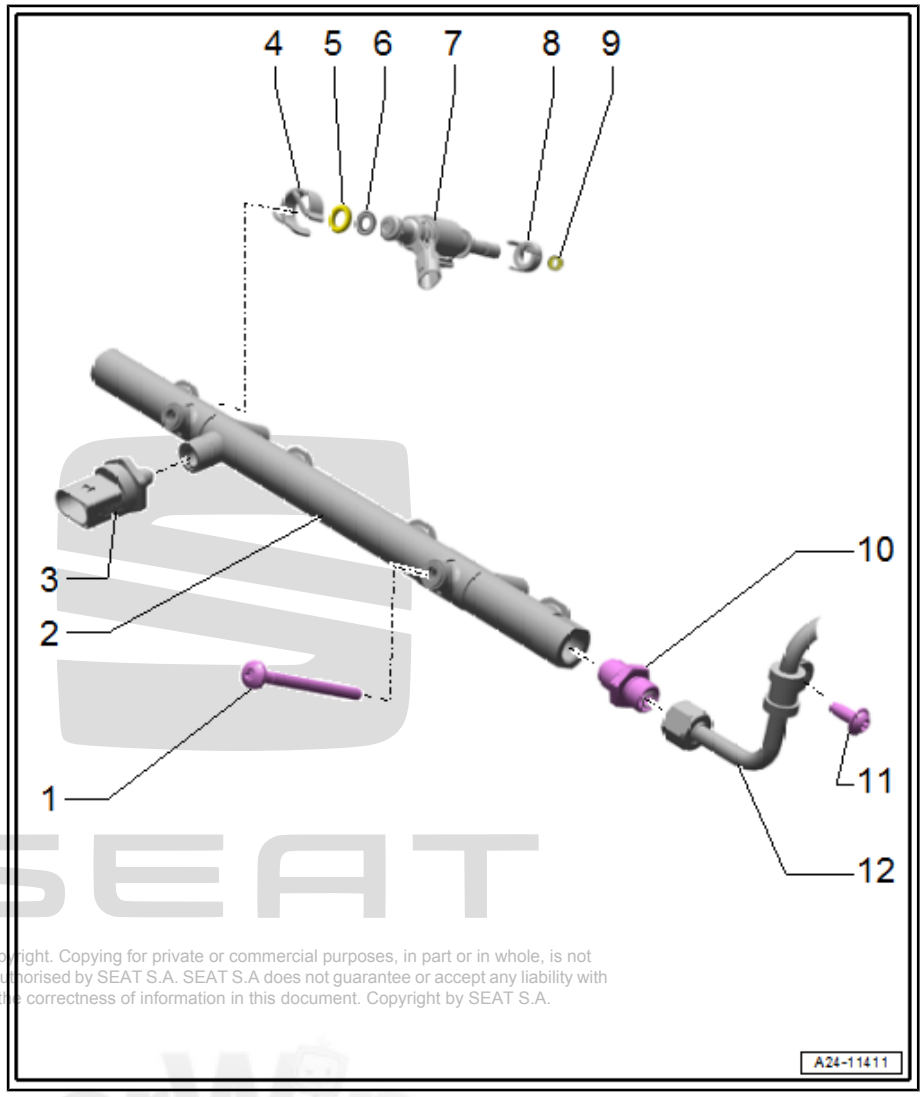

1 - Bolt
- ❑ Qty. 2
- ❑ 9 Nm

2 - Fuel rail for injectors (combustion chamber)
- ❑ Removing and fitting ⇒ page 345

3 - Fuel pressure sensor - G247-
- ❑ Moisten taper and thread with clean engine oil
- ❑ Removing and fitting ⇒ page 369
- ❑ 27 Nm

4 - Pressure rings
- ❑ Renew after removing

5 - O-ring
- ❑ Renew after removing

6 - Spacer ring
- ❑ Renew after removing

7 - Injector
- ❑ Ensure correct installation position
- ❑ Removing and fitting ⇒ page 346
- ❑ cleaning ⇒ page 353

8 - Washer
- ❑ Not installed in all vehicles

9 - Combustion chamber ring seal
- ❑ Renew after removing injector ⇒ page 346

10 - Connection

- ❑ For high-pressure line on fuel rail
- ❑ Renew after removing
- ❑ Lubricate threads lightly with clean engine oil
- ❑ Counterhold on fuel rail when tightening
- ❑ 40 Nm

11 - Bolt

- ❑ 5 Nm

12 - High-pressure pipe

- ❑ Moisten ball with clean engine oil
- ❑ Union nut 27 Nm, wait for 1 minute and retighten to 27 Nm

2.1.2 Assembly overview - fuel rail with injectors, indirect injection

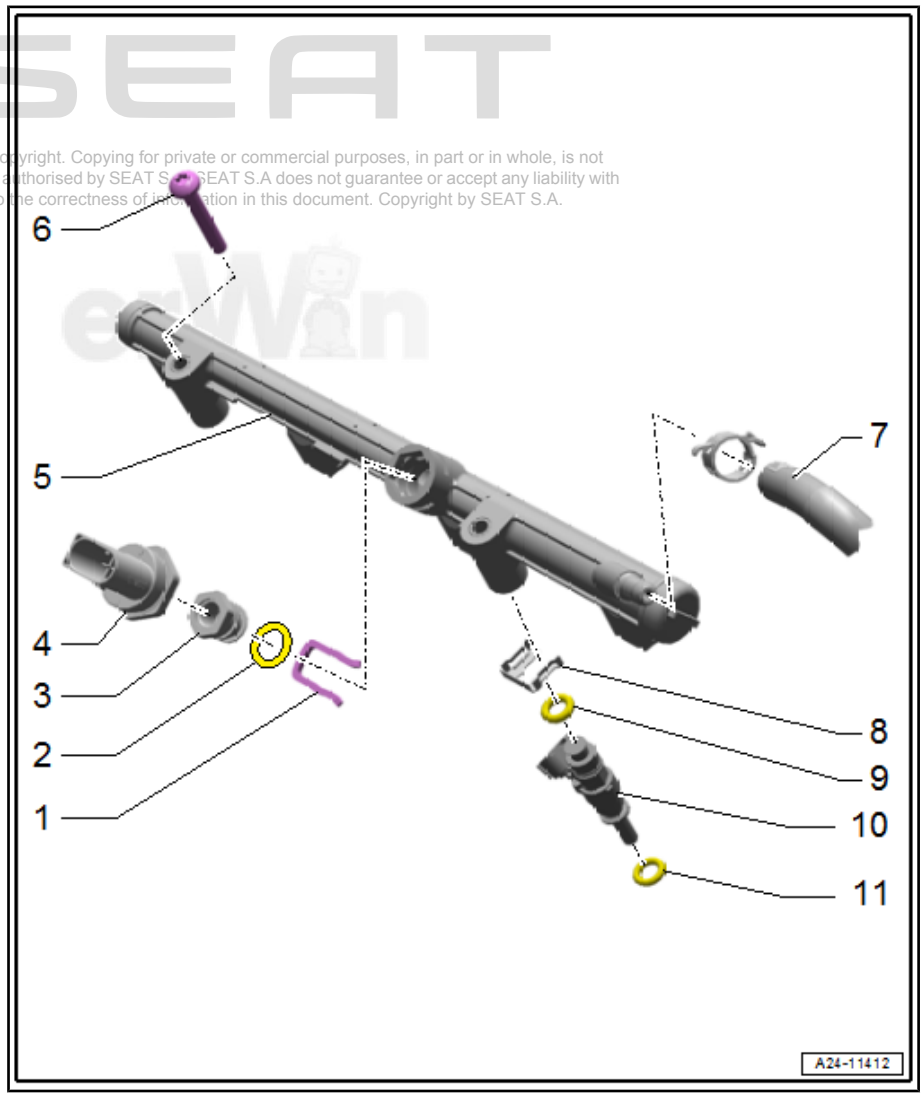

1 - Retaining clip

- ❑ For fuel pressure sender for low pressure - G410-

2 - O-ring

- ❑ Renew after removing

3 - Adapters

- ❑ must be screwed tight with the fuel sender for low pressure - G410- -pos. 4-
- ❑ 15 Nm

4 - Fuel pressure sender for low pressure - G410-

- ❑ must with screwed tight with the adapter -pos. 3-
- ❑ Removing and fitting ⇒ page 373
- ❑ 15 Nm

5 - Fuel rail for injectors (intake manifold)

6 - Bolt

- ❑ Qty. 2
- ❑ 9 Nm

7 - Fuel supply line

- ❑ To fuel rail for injectors (intake manifold)
- ❑ Do not fit under stress

8 - Retaining clip

9 - O-ring

- ❑ Renew after removal

10 - Injector

- ❑ Ensure correct installation position
- ❑ Removing and fitting ⇒ page 349

11 - O-ring

❑ Renew after removing

2.2 Removing and installing fuel rail

Note

In this section, the work procedure for direct injection engines is described.

Removing

Note

All cable ties must be installed in their same place again.

– Now remove the intake manifold ⇒ page 359 .

– Disconnect electrical connector -1- on fuel pressure sender -G247- .

– Remove bolts -arrows-.

– Move clear wiring duct -2- at fuel rail, and pull fuel rail off injectors.

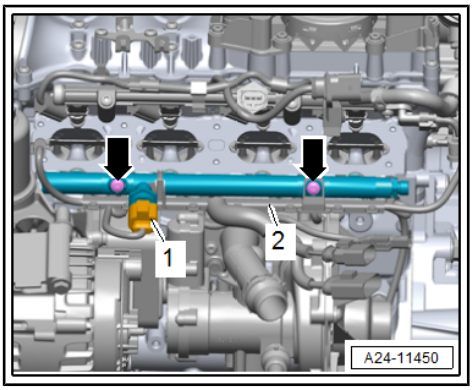

Note

If injectors remain inserted in the fuel rail, disconnect the relevant connector.

Fitting

Installation is carried out in the reverse order; note the following:

– Fit extraction hose ⇒ page 359 .

Specified torques

♦ ⇒ “2.1.1 Assembly overview - fuel rail with injectors, direct injection”, page 343

2.3 Injectors: removing and installing

⇒ "2.3.1 Removing and installing injectors, direct injection", page 346

⇒ "2.3.2 Removing and installing injectors, indirect injection", page 349

2.3.1 Removing and installing injectors, direct injection

Note

Injectors from different manufacturers are used. For allocation to the engine, refer to ⇒ ETKA (Electronic parts catalogue) .

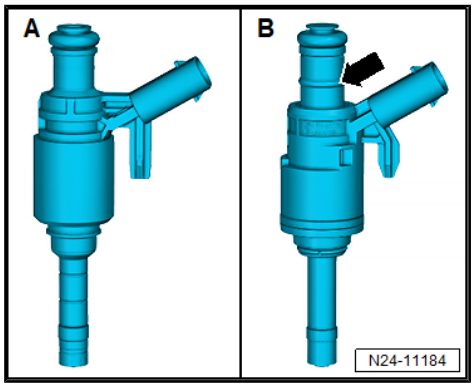

Distinguishing between combustion chamber injectors

Version -A-

Pull injector out of cylinder head ⇒ page 347

Version -B- with bead -arrow-

Pull injector out of cylinder head ⇒ page 348

Special tools and workshop equipment required

- Tool set for FSI engines - T10133 C-

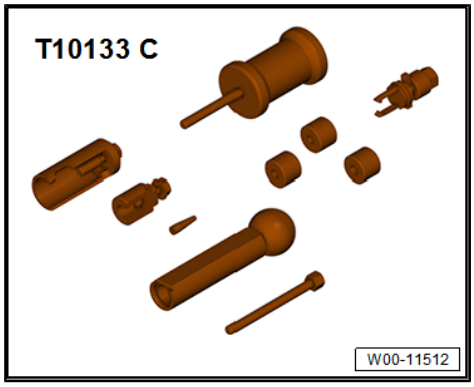

Removing

Note

Injectors must only be installed when the engine is cold.

– Removing fuel rail ⇒ page 345 .

– If the injectors remain in the fuel rail, carefully pull the injectors out of the fuel rail.

Remove injectors if they remain in cylinder head.

– Cover open intake ports with a clean cloth.

– Remove support ring -5- from injector -2-.

– Separate connector from injector that is to be removed, and pull off support ring.

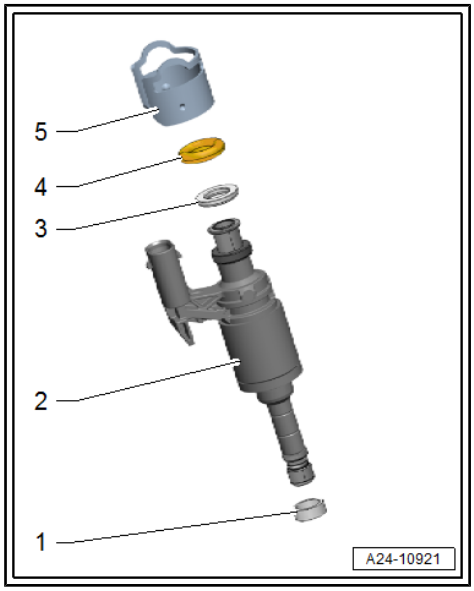

– Fit impact sleeve -T10133/18- over injector.

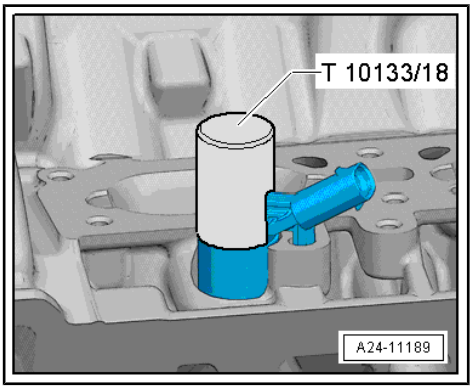

– Carefully loosen injector with light blows of a plastic hammer -1- onto impact sleeve.

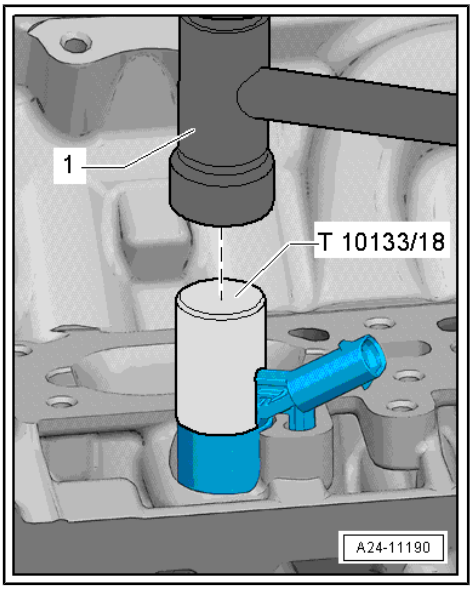

Removing injectors, version A

Note

To pull out injector, use a torque wrench set to 5 Nm.

– Insert puller -T10133/2A- into groove in injector.
– Then fit guide puller T10133/16A .
– Pull out injector by turning bolt with torque wrench -1-.
– If torque limit of »5 Nm« has been reached and the injector still cannot be pulled out, remove puller and use impact sleeve again to release injector.

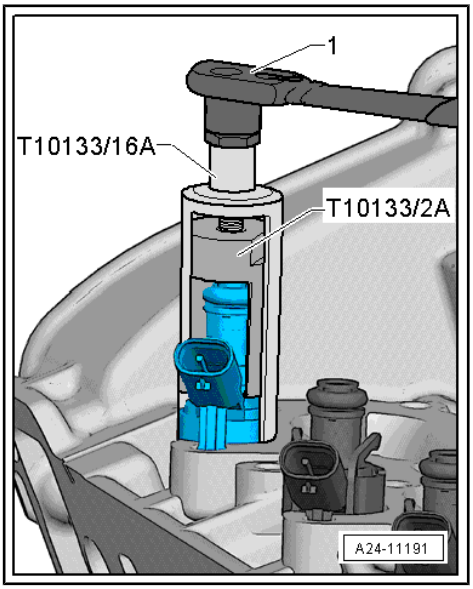

Note

Observe correct torque to avoid irreparable damage to injector.

Removing injectors, version B

– Bolt puller - T10133/20- -A- to slide hammer - T10133/3- -B-.

– Position puller -A- behind groove -arrow- on injector.

– Pull out injector -1- with soft blows.

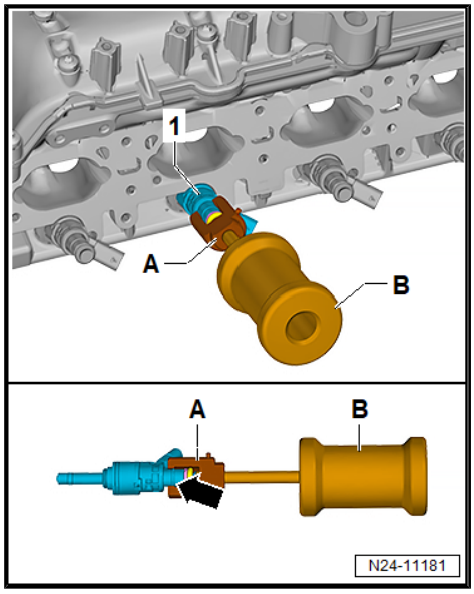

Installation

- Use the entire repair kit when installing.
- Renew support ring after removal.
- Renew combustion chamber seal before reinstalling injector.
- The combustion chamber seal on the injector must not be oiled or greased.

– Renewing seals on injector ⇒ page 350 .

– Clean hole in cylinder head using nylon brush -T10133/4- -A-.

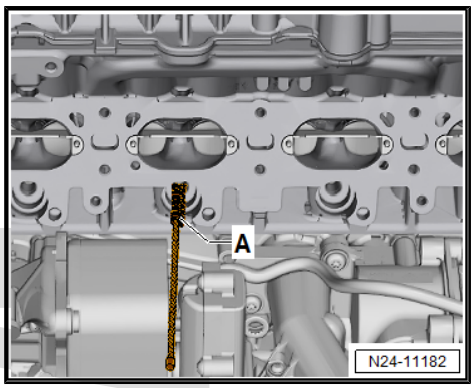

– Push injector into cylinder head bore (free of oil and grease) as far as it will go by hand. Ensure injectors are positioned correctly -arrow- in cylinder head.

- Lug -1- and hole -arrow- in cylinder head must face each other.
- The injector should enter smoothly. Otherwise wait until the combustion chamber seal has contracted sufficiently.

– Fit support ring onto injector.

– Lightly lubricate O-rings for injectors with clean engine oil.

– Install fuel rail ⇒ page 345 .

– Fit extraction hose ⇒ page 359 .

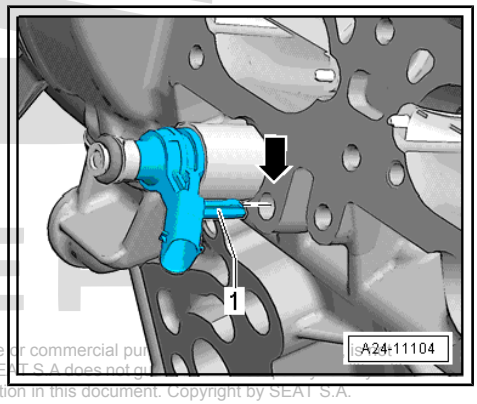

2.3.2 Removing and installing injectors, indirect injection

Removing

– Remove engine cover panel ⇒ page 57 .

– Release fasteners -arrows- and detach wiring duct -1- from bracket.

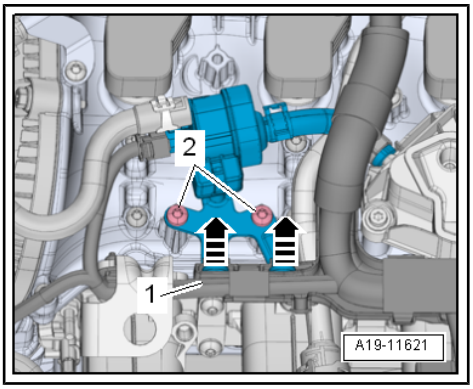

Note

Ignore -item 2-.

– Unscrew bolt -1- for upper coolant pipe -arrow-.

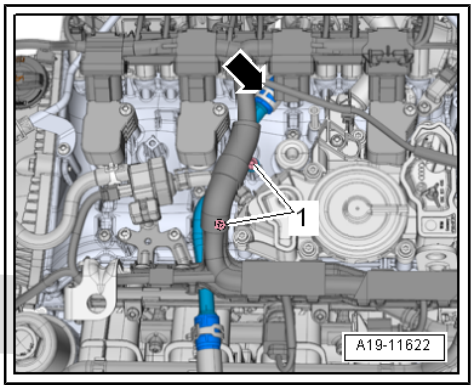

– Unplug electrical connectors:

2 - For fuel pressure sender for low pressure - G410-

3 - for intake manifold sender - GX9-

4 - Intermediate connector for injectors (intake manifold)

– Move clear wiring harness -1- at engine lifting eye.

– Unscrew bolts -arrows- at fuel rail.

– Unscrew bolt -5- for retainer of connector.

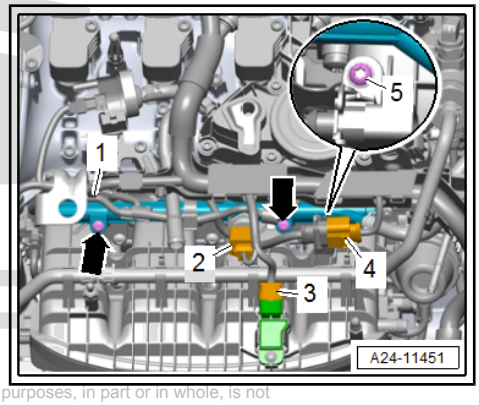

– Lay fuel hose -1- at intake manifold to one side.

CAUTION

The fuel system is pressurised.

Risk of injury due to fuel which may spurt out.

- **Wear safety goggles.**
- **Wear protection gloves.**
- **Release pressure: place clean cloth around connection and carefully open connection.**

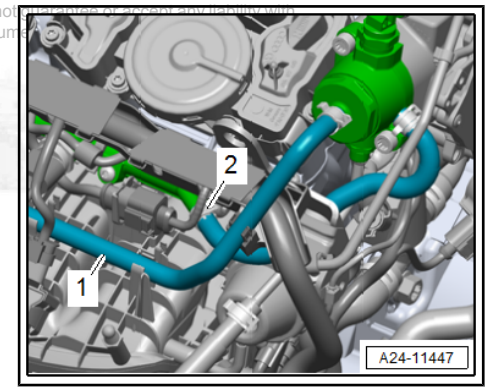

– Release hose clip -2-, and remove coolant hose.

– Carefully lift out fuel rail with injectors.

– Unplug electrical connector -4-.
– Pull off retaining clip -2-, and pull injector -3- off fuel rail -1-.

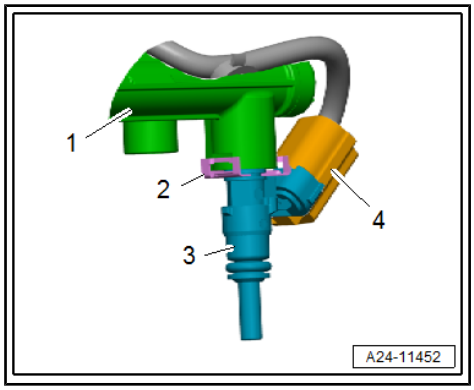

Fitting

– Renew O-rings -1, 4- for injector -2-.
– Before installing O-rings, lightly moisten them with clean engine oil.
– Secure injector in fuel rail using retaining clip -3-.
– Attach electrical connectors.
– Push fuel rail with injectors by hand as far as it will go into aperture in intake manifold (do not use oil or grease).

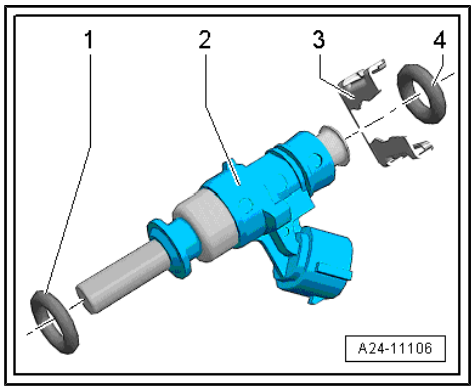

Continue installation in reverse order of removal.

Specified torques

♦ ⇒ “2.1.2 Assembly overview - fuel rail with injectors, indirect injection”, page 344
♦ ⇒ “3.1 Exploded view - coolant pipes”, page 287

2.4 Renewing seals on injectors

Note

♦ *Injectors from different manufacturers are used. For allocation to the engine, refer to ⇒ ETKA (Electronic parts catalogue) .*
♦ *In the case of version -B- injectors (with bead -arrow-), an M8 washer must be fitted onto the injector before installing the seal. This prevents the calibration sleeve from being pushed up behind the seal.*

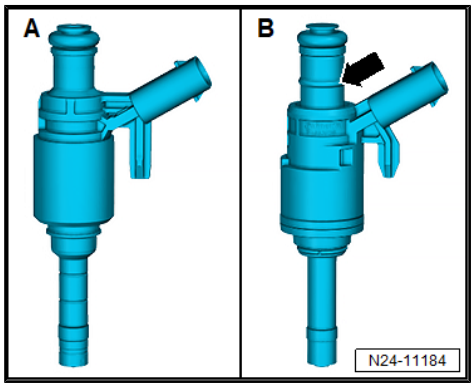

Special tools and workshop equipment required

♦ Tool set for FSI engines - T10133C-

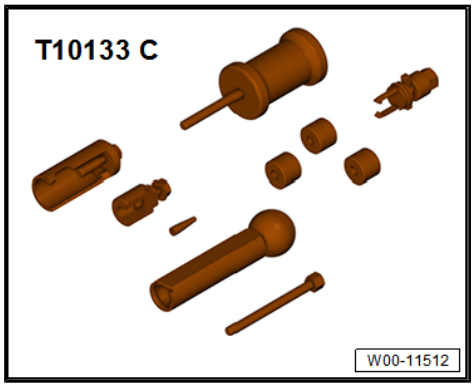

Special tools and workshop equipment required

- Tool set for FSI engines - T10133C-

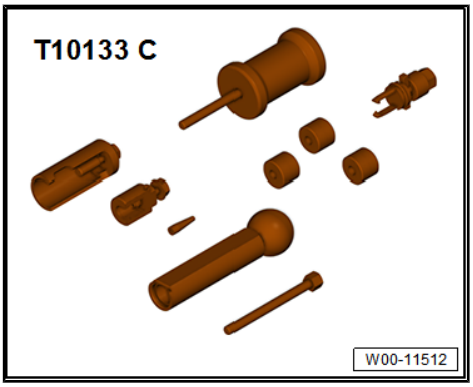

- M8 washer, only for version -B- injectors

Note

- *In this section, the work procedure for the combustion chamber seals (Teflon ring seal) is described.*
- *The combustion chamber ring seal must always be renewed prior to reinstalling the injector.*

– Clean injector carefully.

– Carefully cut oil seal open with a knife -arrow-. Avoid contact between knife blade and valve body under all circumstances.

– Remove old seal and clean the groove of the seal -arrow-. Remove any deposits (coking) with a brass wire brush.

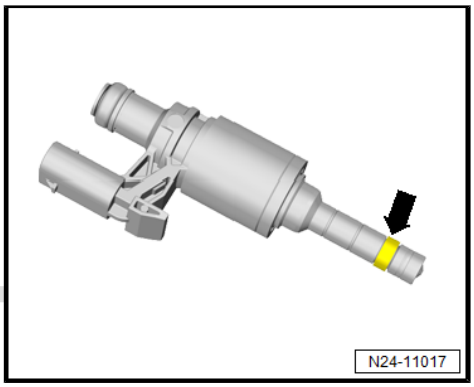

– Put new seal -1- on assembly cone - T10133/5-.

– Using assembly sleeve - T10133/6- (knurled section points to seal -1-), slide seal onto assembly cone as far as possible.

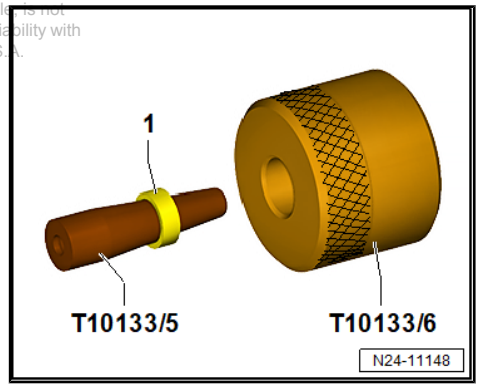

– Rotate assembly sleeve - T10133/6- (knurled section no longer points to seal).
– Now push oil seal to end of assembly cone .

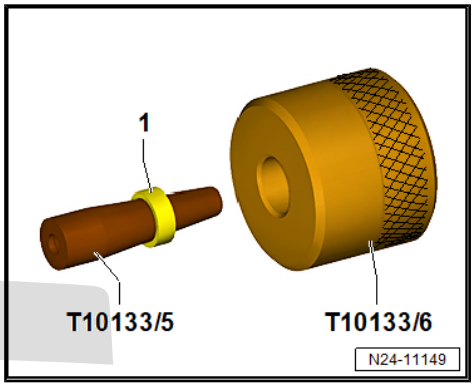

– Only for version -B- injectors: fit M8 washer -A- onto injector.

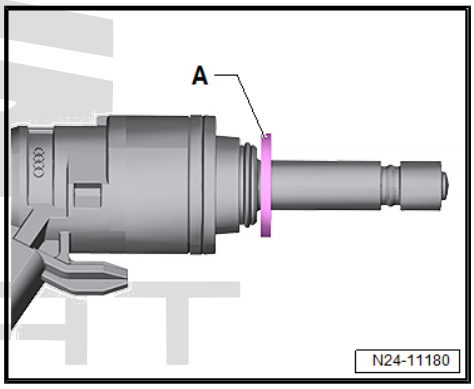

– Place the assembly cone - T10133/5- with seal onto the injector from front.
– Slide seal with assembly sleeve - T10133/6- onto injector.

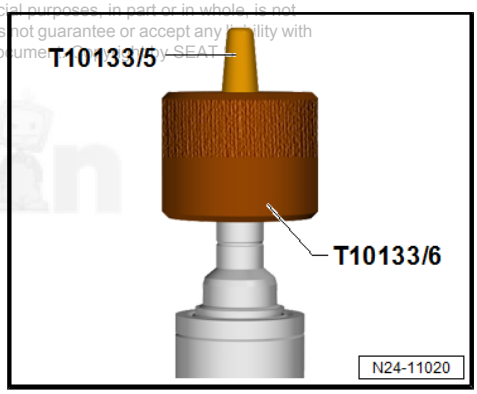

– Remove assembly cone - T10133/5- , and push combustion chamber ring seal into groove for combustion chamber ring seal using assembly sleeve - T10133/6- -arrow-.

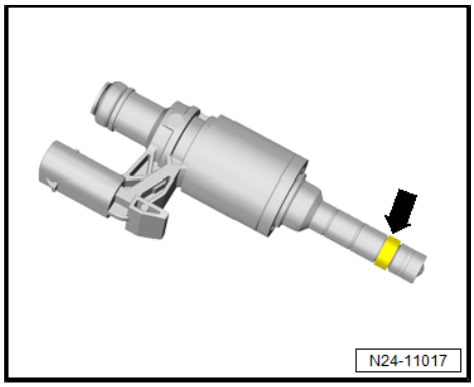

– Push on calibration sleeve - T10133/7- as far as washer -A- or injector, and simultaneously turn it slightly (approx. 180°).
– Pull calibration sleeve - T10133/7- off again, turning in opposite direction.

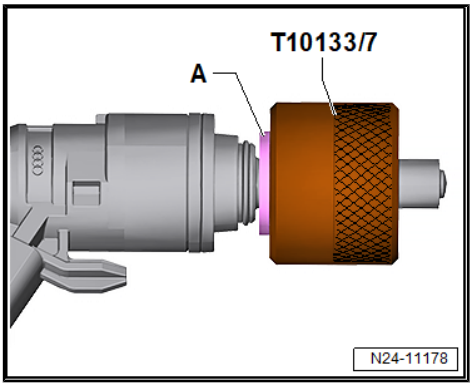

– Push on calibration sleeve - T10133/8- as far as washer -A- or injector, and simultaneously turn it slightly (approx. 180°).
– Pull calibration sleeve - T10133/8- off again, turning in opposite direction.
– Remove washer -A-.
– Renew O-ring on injector (apply thin coating of clean engine oil prior to installation).

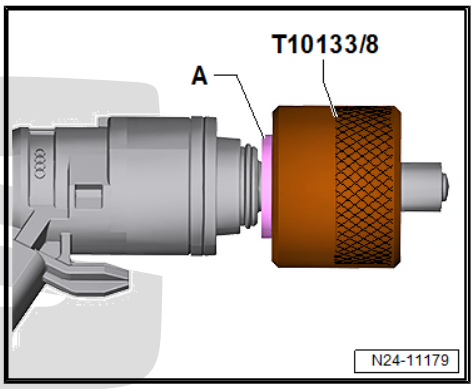

2.5 Cleaning injectors

Note

In this section, the work procedure for injectors (combustion chamber) is described.

Special tools and workshop equipment required

- Ultrasonic cleaning unit - VAS 6418-
- Mounting plate for injection modules - VAS 6418/1-
- Cleaning liquid - VAS 6418/2-

Clean

– Close drain tap -arrow- of ultrasonic cleaning unit - VAS 6418- at right-hand side of housing.
– Fill ultrasonic cleaning unit with 2120 ml of water which was allowed to stand for a while and with cleaning fluid - VAS 6418/2- .

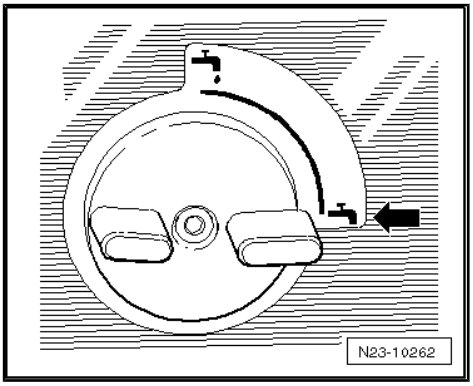

Mixing ratio for cleaning fluid

- 2100 ml of water which was allowed to stand for a while and 20 ml of cleaning fluid - VAS 6418/2- .

– Remove the injectors ⇒ page 346 .

– Fit mounting plate for injection modules - VAS 6418/1- onto cleaning unit.

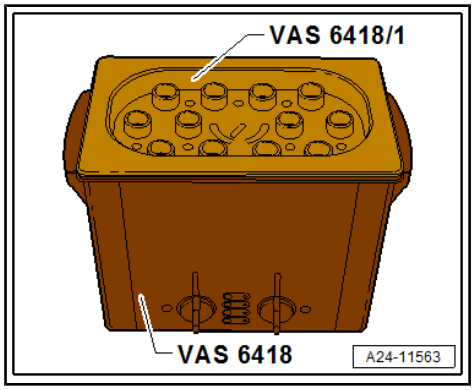

Note

- *Before starting ultrasonic cleaning unit - VAS 6418- , it is essential that the safety information described in the operating manual is observed.*
- *The ideal fluid level is reached when the cleaning agent is approx. 1-4 mm above the base of the support plate. If the level is insufficient you may damage the ultrasonic cleaning unit - VAS 6418- .*

– Insert injectors into guides of mounting plate for injection modules - VAS 6418/1- as far as stop.

– Switch the cleaning unit on pressing the key On/Off -C-.

– Use rotary knob -A- to set cleaning time to 30 minutes.

– Set rotary knob -B- to a temperature of 50°C.

– Press button ▶ -D- to start the cleaning process.

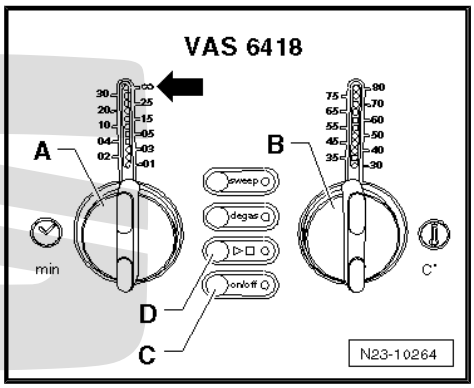

Note

- *Now the cleaning controlled by temperature is activated. During the heating time the ultrasonics is switched on at intervals for the cleaning fluid recirculation. Once the preselected temperature is reached the ultrasonics is on continuously.*
- *The cleaning time must be at least 30 minutes and cleaning only starts at a temperature of at least 50°C.*

– After cleaning, always renew combustion chamber ring seal (Teflon seal) for each injector ⇒ page 350 .

– Install combustion chamber injectors ⇒ page 346 .

3 Air cleaner

⇒ “3.1 Exploded view - air cleaner housing”, page 355

⇒ “3.2 Air filter housing: removing and fitting”, page 356

3.1 Exploded view - air cleaner housing

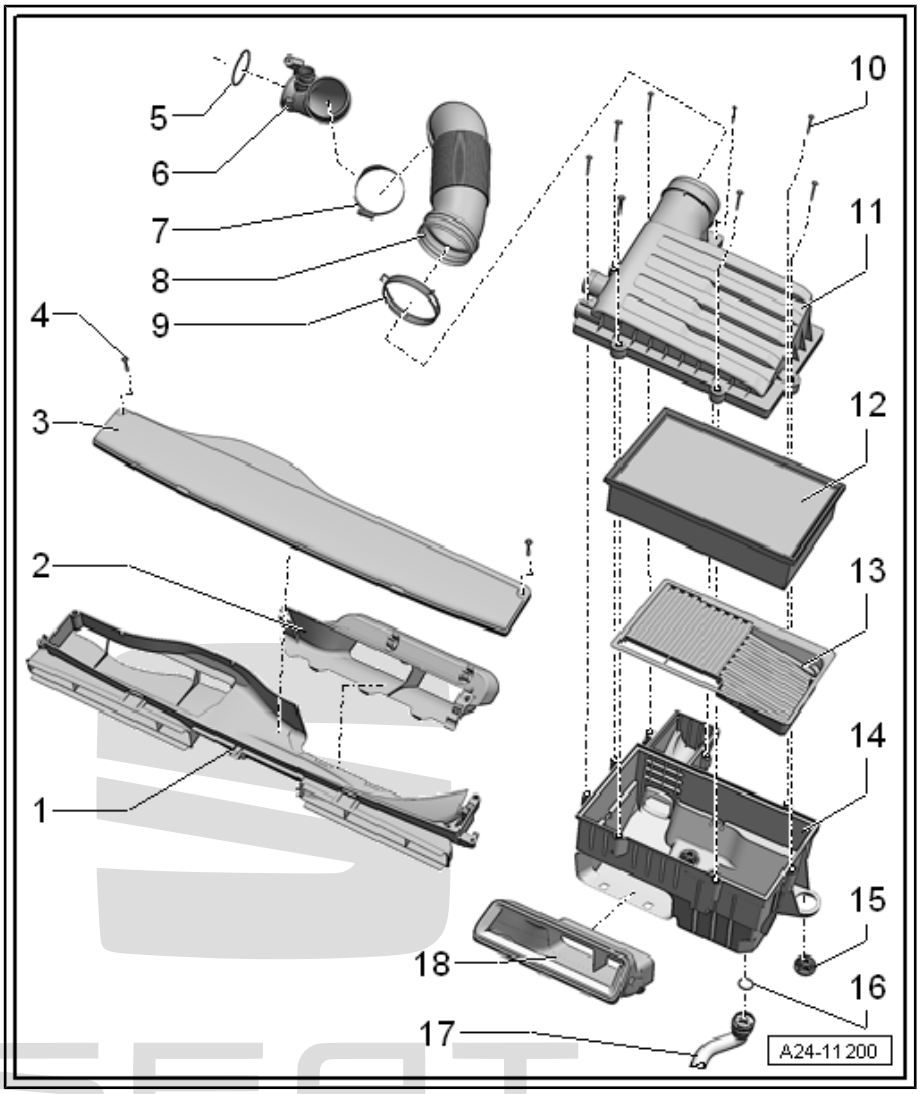

1 - Lower part of air duct
- ❑ On lock carrier

2 - Upper part for air duct
- ❑ On lock carrier

3 - Cover
- ❑ for air duct

4 - Bolt
- ❑ 2 Nm

5 - Seal

6 - Air intake hose

7 - Screw-type clamp

8 - Air intake hose

9 - Spring type clip

10 - Bolts
- ❑ 1.5 Nm

11 - Air filter top section
- ❑ Clean out dirt, leaves and salt deposits

12 - Air filter element
- ❑ Use only genuine air filter elements ⇒ Electronic Parts Catalogue (ETKA) .
- ❑ Intervals for changing filter ⇒ Maintenance ; Booklet 501
- ❑ Remove and install ⇒ Maintenance ; Booklet 501 .

13 - Battery cell
- ❑ For lower part of air filter

14 - Air cleaner (bottom section)
- ❑ Clean out dirt, leaves and salt deposits

15 - Rubber buffer

16 - O-ring
- ❑ Renew if damaged.

17 - Water drain hose
- ❑ With valve
- ❑ Clean

18 - air duct
- ❑ On air cleaner (bottom section)

3.2 Air filter housing: removing and fitting

Removing

Remove air filter housing ⇒ page 356 .

For reasons of space, remove the air filter housing together with the intake hose ⇒ page 356 .

Remove air filter housing.

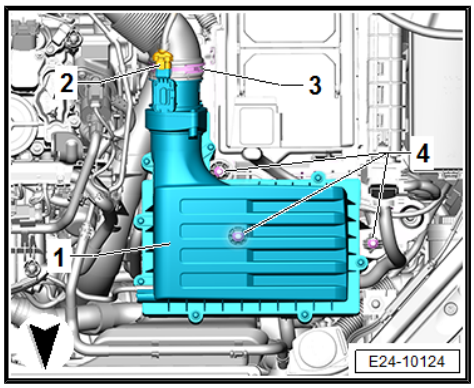

- Pull off connector -2- for air mass measurement module - GX35- .
- Open hose clip -3-, and remove air hose.
- Pull off vacuum hose.
- Pull air filter housing -1- upwards off ball head pins -4-.

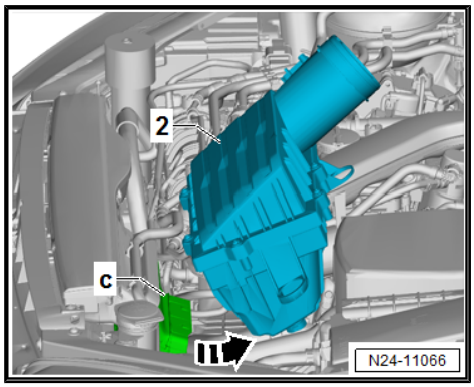

- Turn air filter housing -2- in -direction of arrow- out of front air duct -c-.

For reasons of space, remove air filter housing together with air intake hose.

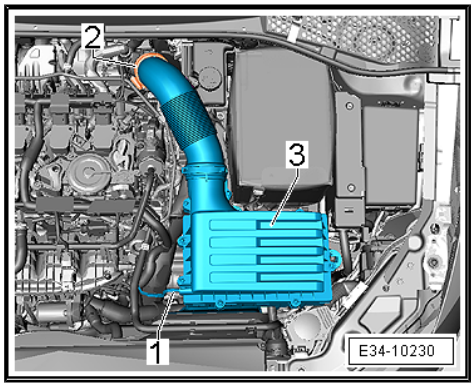

- Disconnect vacuum hose -1-.
- Loosen the hose clip -2-, remove the air intake hose.
- Remove and pull off air filter housing -3- upwards from the rubber mountings.

– Pull out air filter housing -3- in -direction of arrow-. For it, remove the air supply hood -2- from the top element in air supply -1-.

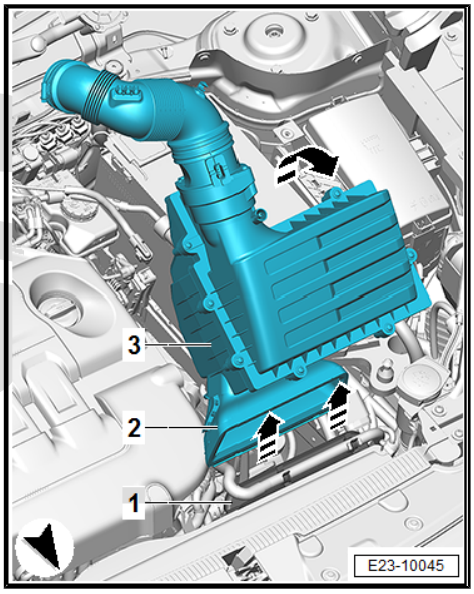

Fitting

Note

- *Use a silicone-free lubricant when installing the air hose.*
- *Secure all hose connections with the correct type of hose clips (same as original equipment) ⇒ Electronic parts catalogue (ETKA) .*

– Check for salt residue, dirt and leaves in air intake hose (engine intake side).

– Check that there is no dirt between the air duct and the air filter element.

– Re-install air cleaner housing.

Note

The water drain hose must be routed straight downwards without kinks.

4 Suction hose

⇒ “4.1 Exploded view - intake manifold”, page 358

⇒ “4.2 Removing and installing intake manifold”, page 359

⇒ “4.3 Throttle valve control unit GX3 : removing and fitting”, page 365

⇒ “4.4 Cleaning throttle valve module ”, page 367

4.1 Exploded view - intake manifold

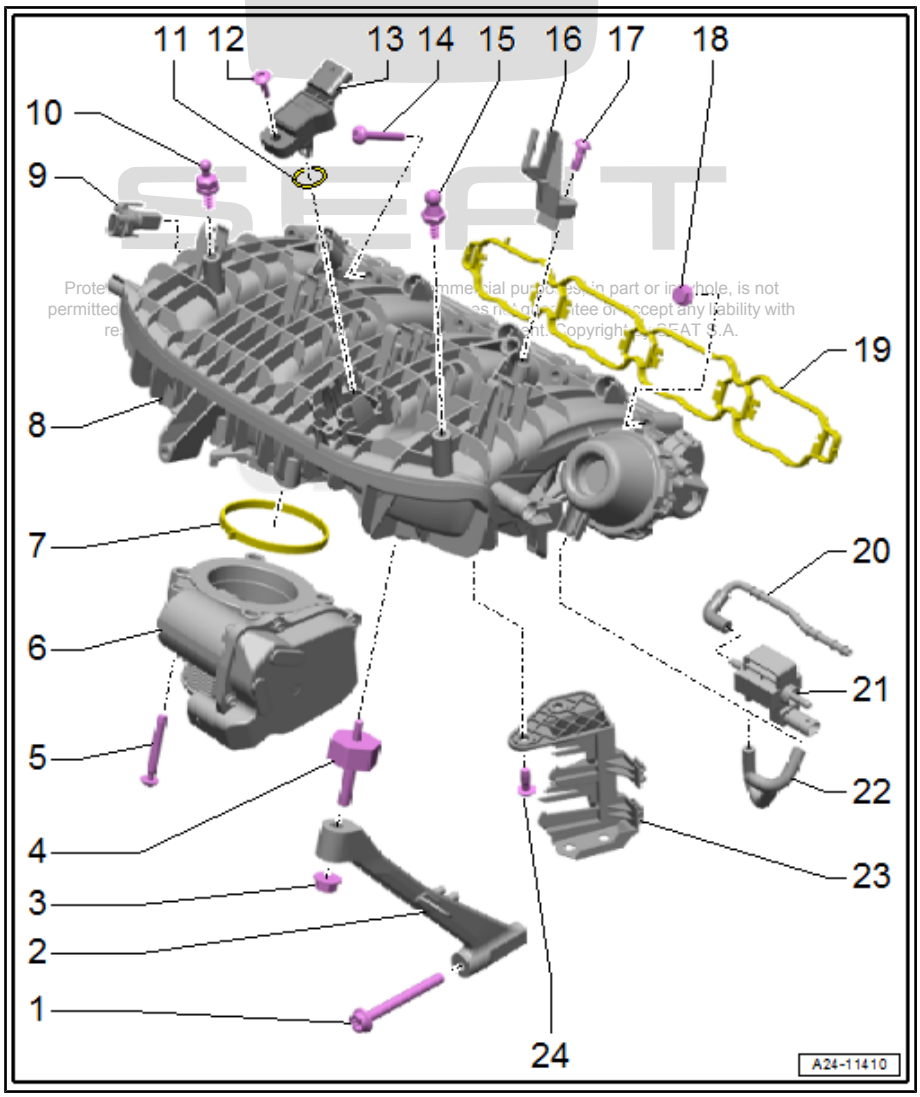

1 - Bolt
- ❑ 20 Nm

2 - Support for intake manifold

3 - Nut
- ❑ 10 Nm

4 - Bonded rubber bush
- ❑ 5 Nm

5 - Bolt
- ❑ 7 Nm

6 - Throttle valve control mechanism - GX3-
- ❑ With activation of the throttle valve control for electric accelerator control - G186- , angle senders 1 for throttle valve control with electric accelerator control - G187- and angle sender 2 for throttle valve control with electric accelerator control - G188-
- ❑ After removing, installing or renewing throttle valve module - GX3- it must be re-adapted to engine control unit - J623- using ⇒ Vehicle diagnostic tester.

7 - Seal
- ❑ Renew after removing

8 - Suction hose
- ❑ Removing and fitting ⇒ page 359

9 - Intake manifold flap potentiometer - G336-

10 - Ball head stud
- ❑ For engine cover panel
- ❑ 5 Nm

11 - O-ring
- ❑ Renew after removing

12 - Bolt
- ❑ 2.5 Nm

13 - Intake manifold sender - GX9-

- ❑ Removing and fitting ⇒ page 374

14 - Bolt

- ❑ Tighten crosswise in several stages
- ❑ Qty. 8
- ❑ 9 Nm

15 - Ball head stud

- ❑ For engine cover panel
- ❑ 5 Nm

16 - Support plate

- ❑ For electrical connector

17 - Bolt

- ❑ 5 Nm

18 - Nut

- ❑ Tighten crosswise in several stages
- ❑ Qty. 2
- ❑ 9 Nm

19 - Gasket

- ❑ Renew after removing

20 - Vacuum hose

21 - Intake manifold flap valve - N316-

22 - Vacuum hose

23 - Support plate

- ❑ For electrical connectors

24 - Bolt

- ❑ 5 Nm

4.2 Removing and installing intake manifold

Special tools and workshop equipment required

- ♦ Measuring tool - T10118-

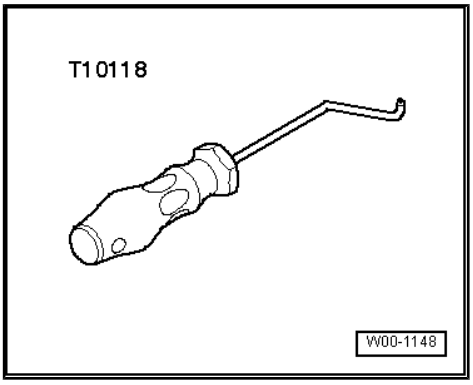

♦ Hose clip pliers - VAS 6362-

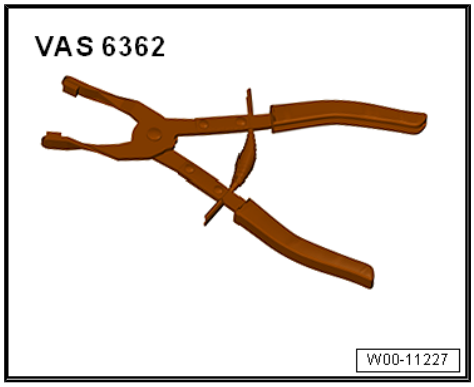

♦ Socket wrench - T10347-

Removing

– Remove engine cover panel ⇒ page 57 .

– Remove air filter housing ⇒ page 356 .

– Disconnect battery ⇒ Electrical system; Rep. gr. 27 ; Battery; Disconnecting and connecting battery .

– Free coolant hose -2-.

– Remove bolts -arrows-.

– Unclip front side of the air guide -1- by unlocking the retaining tabs arrows. Remove in -direction of arrow-.

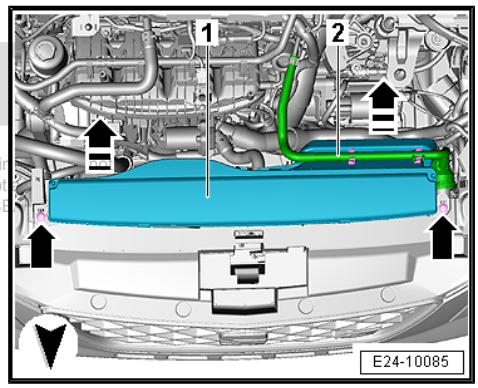

– Remove bolts -arrows- for coolant line from intake manifold.

– Remove noise insulation ⇒ General body repairs, exterior; Rep. gr. 66 ; Noise insulation; Assembly overview - noise insulation .

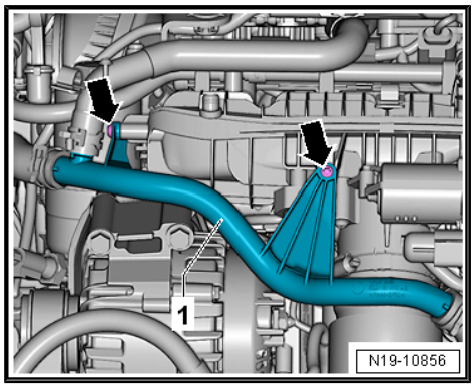

– Free coolant hose -3-.
– Unplug electrical connector -1- at charge pressure sender - G31- .
– Remove bolts -arrows-.
– Loosen hose clip -2- on air hose and pull air hose downwards off throttle valve module - GX3- .

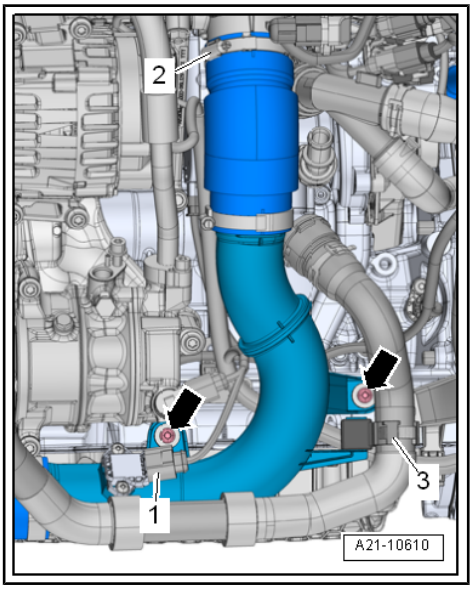

– Free coolant hose -3-.
– Free electrical wiring harnesses -1- and -2- from fittings and lay them to one side.
– Unfasten screw-type clip -4-.
– Remove bolts -arrows-.

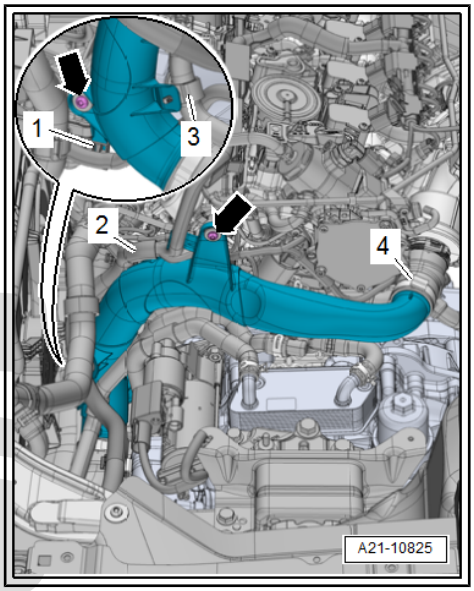

– Loosen hose clip -arrow-, and remove left charge air hose -1- downwards, together with air pipe.

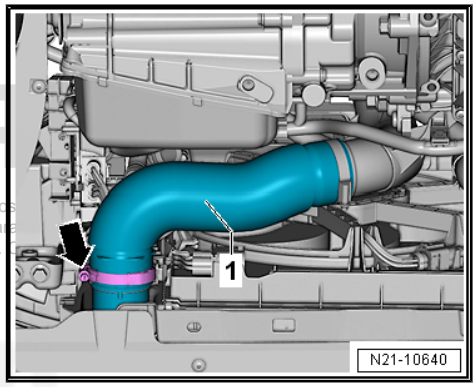

– Remove intake manifold support. To do this, unscrew nut -2- and bolt -3-.

– Remove rubber bush -1- for intake manifold support.

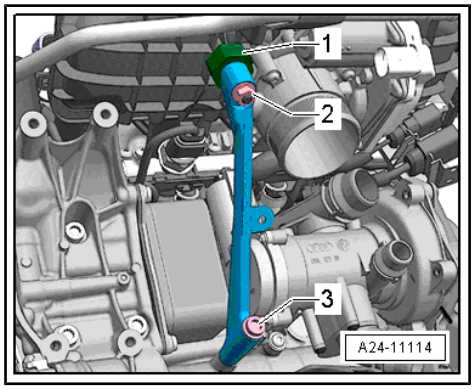

– Unplug electrical connectors and move wiring clear:

1 - For intake manifold flap potentiometer - G336-

2 - For fuel pressure sender for low pressure - G410-

3 - Central connector for injectors (intake manifold)

4 - for intake manifold sender - GX9-

5 - For Hall sender - G40-

6 - for throttle valve control unit - J338-

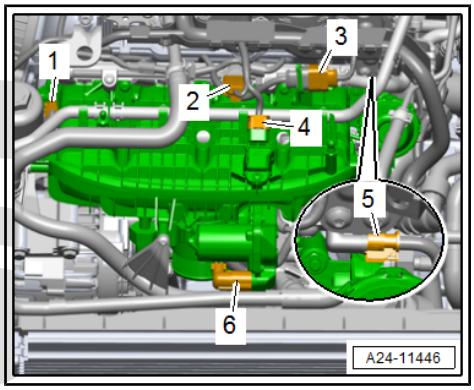

– Disconnect electrical connectors -1, 2, and 3- underneath intake manifold.

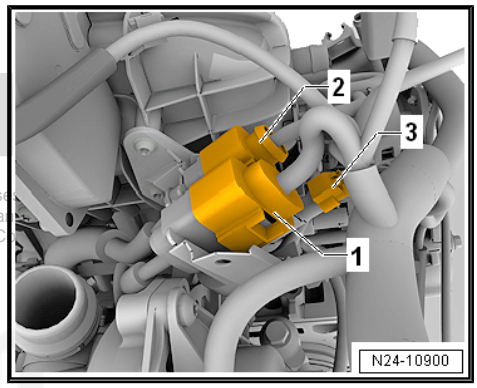

– Disconnect connector -1- at intake manifold flap valve - N316- .

– Disconnect vacuum hose -2-.

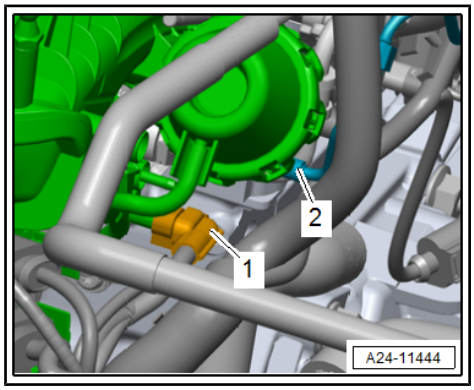

– Release fasteners -arrow-, and pull wiring duct slightly upwards.

– Unscrew bolts -2- and -3-, and carefully pull coolant line slightly upwards.

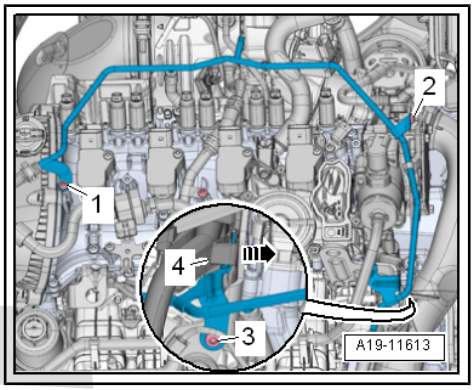

– Lay fuel hose -1- at intake manifold to one side.

CAUTION

The fuel system is pressurised.

Risk of injury due to fuel which may spurt out.

- **Wear safety goggles.**
- **Wear protection gloves.**
- **Release pressure: place clean cloth around connection and carefully open connection.**

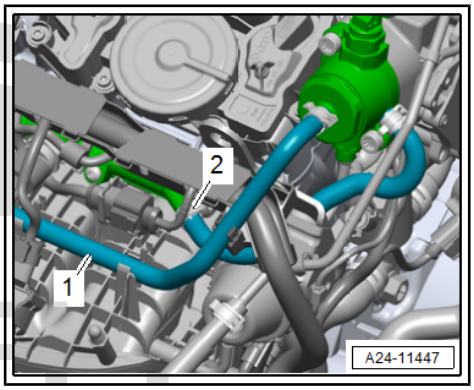

– Release hose clip -2-, and remove coolant hose.

– Vehicles with auxiliary radiators: unscrew bolts -arrows- and slightly press the coolant line downwards.

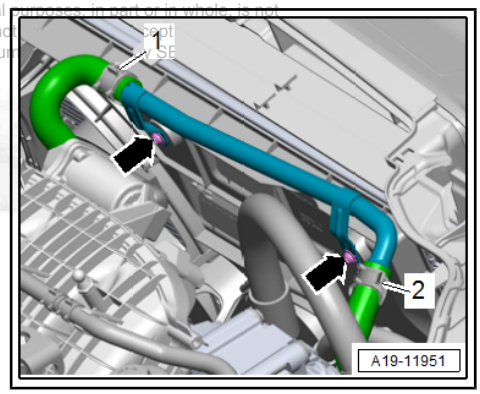

– Unscrew retaining clip -arrow- for high-pressure pipe.

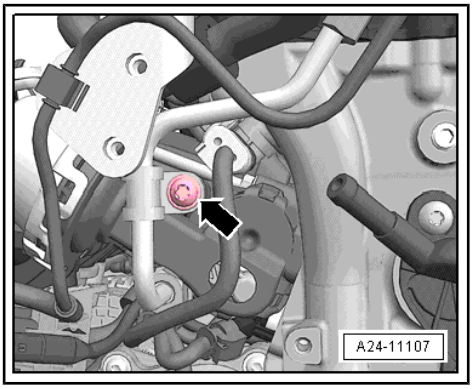

– Counterhold union -A- and unscrew union nut -arrow-.

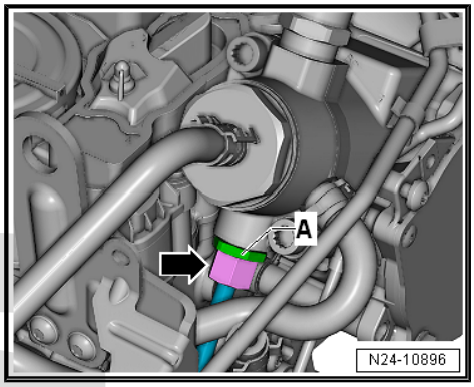

– Unscrew union nut -arrow- on fuel rail using socket AF 17 mm - T10456- , and remove high-pressure line.

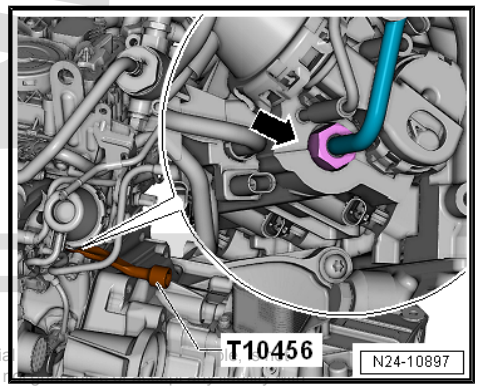

Note

- *Collect escaping fuel with a clean cloth.*
- *Seal off open connections with clean caps. Make sure no dirt gets into the fuel system.*

– Unscrew nuts -A- from intake manifold, and unscrew bolts -arrows- using socket Torx - T10347- .

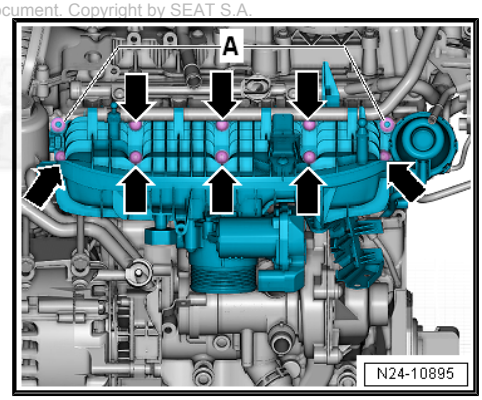

– Slightly pull off intake manifold from cylinder head and unscrew bolts -arrows-for bracket -A-.

– Take intake manifold off cylinder head.

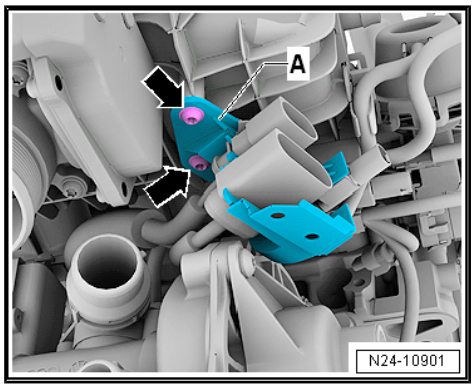

Note

Block off the intake ports with a clean cloth.

Fitting

– If the union on the high-pressure pump has been detached, renew union.

– Fit intake manifold on cylinder head and tighten bracket -A- for electrical connectors.

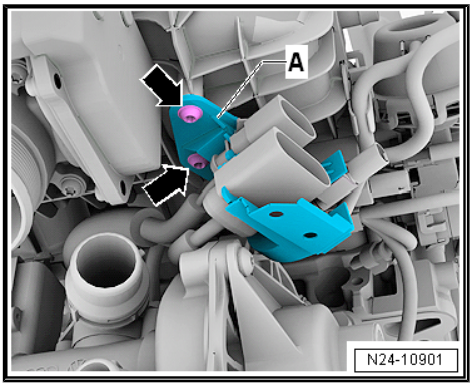

– Screw on nuts -A- hand-tight.

– Tighten bolts -arrows- using bit - T10347- evenly from the inside to the outside.

– Continue installation in reverse order.

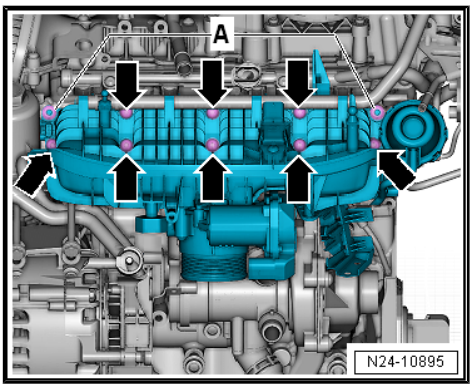

Specified torques

◆ ⇒ “2.1 Assembly overview - fuel rail with injectors”, page 343

◆ ⇒ “4.1 Exploded view - intake manifold”, page 358

4.3 Throttle valve control unit - GX3- : removing and fitting

Throttle valve control unit - GX3- comprises:

◆ Throttle valve drive (electric power control) - G186-

◆ Throttle valve drive angle sender 1 (electric power control) - G187-

◆ Throttle valve drive angle sender 2 (electric power control) - G188-

Removing

– Remove engine cover
⇒ “3.1 Removing and installing engine cover panel”, page 57

– Remove air filter housing ⇒ page 356 .

– Free coolant hose -2-.

– Remove bolts -arrows-.

– Unclip front side of the air guide -1- by unlocking the retaining tabs arrows. Remove in -direction of arrow-.

– Remove noise insulation ⇒ General body repairs, exterior; Rep. gr. 66 ; Noise insulation; Assembly overview - noise insulation .

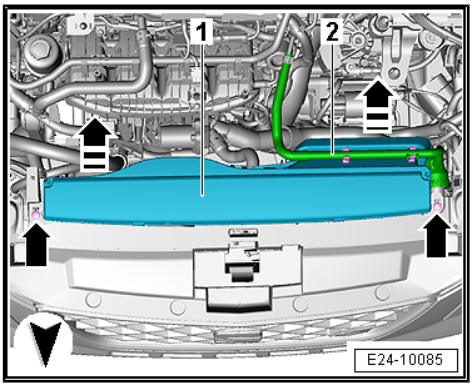

– Release hose clip -2- and detach air hose from charge air cooler.

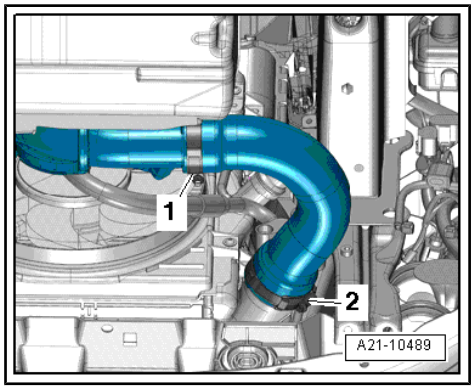

Note

Item -1- can be disregarded.

– Free coolant hose -3-.

– Unplug electrical connector -1- at charge pressure sender - G31- .

– Remove bolts -arrows-.

– Release hose clip -2- on air hose and pull air hose off throttle valve module - GX3- .

– Remove the air hose by lowering it.

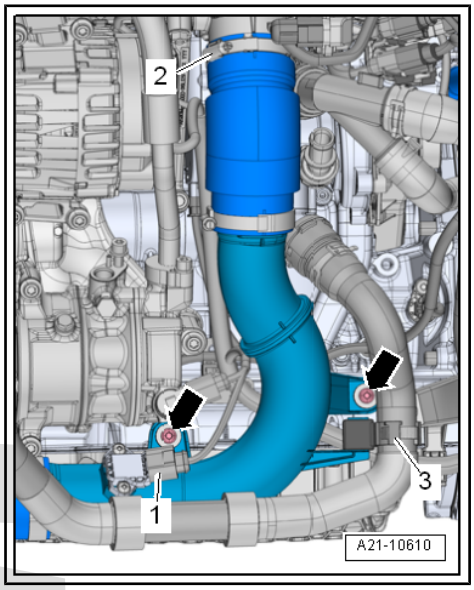

– Unplug electrical connector -1- from throttle valve module - GX3- .

– Unscrew bolts -arrows- on throttle valve module - GX3- from underneath and remove throttle valve module - GX3- .

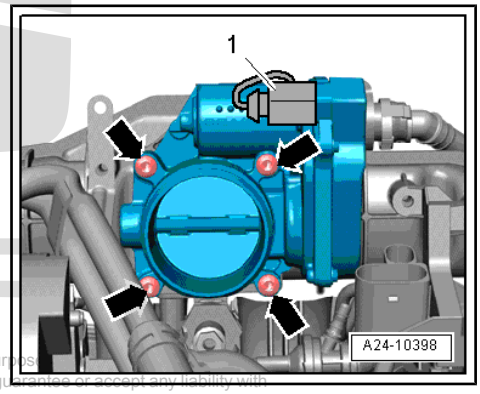

Fitting

– Install in reverse order:

– Clean the sealing surfaces of the sealing ring.

– Renew seal ring.

Specified torques

♦ ⇒ “4.1 Exploded view - intake manifold”, page 358

– After throttle valve module - GX3- has been renewed, it must be re-adapted to engine control unit - J623- . Use ⇒ Vehicle diagnostic tester.

4.4 Cleaning throttle valve module

Note

- *The throttle valve module must be adapted if a new engine control unit - J623- is installed.*
- *Carbon deposits and dirt in the limit stop can lead to incorrect adaption values.*
- *Take care not to scratch the throttle valve housing when cleaning it.*

Special tools and workshop equipment required

- Commercially available acetone
- Brush

– Remove throttle valve control unit - GX3- ⇒ page 365 .

– Open the throttle valve by hand and lock in the opened position using a plastic or wooden cotter -arrow-.

CAUTION

Risk of injury caused by acetone. Acetone is highly flammable and may cause eye and skin irritation.

- **Wear safety goggles.**
- **Wear protection gloves.**

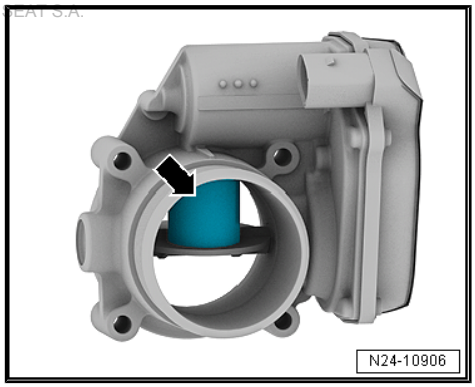

– Clean throttle valve housing thoroughly, especially around the points -arrows- where the throttle valve closes, using commercially available acetone and a small brush.

– Wipe the throttle valve support with a non-fluffy cloth.

– Wait until the acetone has completely been flushed away.

– Install throttle valve module - GX3- ⇒ page 365 .

– Delete programmed values, and adapt engine control unit - J623- to throttle valve module . Use ⇒ Vehicle diagnostic tester.

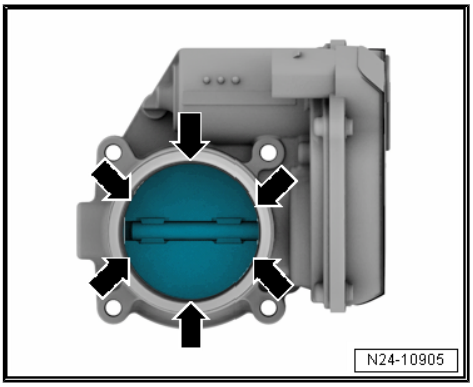

5 Sensors

5.1 Assembly overview - actuator for structure-borne sound and control unit for structure-borne sound

1 - Bolt

- ❑ Tightening torque ⇒ Electrical system; Rep. gr. 94 ; Exterior lights, lamps and switches; Structure-borne sound

2 - Bracket for actuator for structure-borne sound - R214-

- ❑ Remove and install bracket for actuator ⇒ Electrical system; Rep. gr. 94 ; Exterior lights, lamps and switches; Structure-borne sound

3 - Actuator for structure-borne sound - R214-

- ❑ Remove and install ⇒ Electrical system; Rep. gr. 94 ; Exterior lights, lamps and switches; Structure-borne sound

4 - Nut

- ❑ Qty. 2
- ❑ 8 Nm

5 - Bracket of the control unit for structure-borne sound - J869-

- ❑ Remove and install bracket Control unit for structure-borne sound - J869- ⇒ Electrical system; Rep. gr. 94 ; Exterior lights, lamps and switches; Structure-borne sound

6 - Control unit for structure-borne sound - J869-

- ❑ Remove and install Control unit for structure-borne sound - J869- ⇒ Electrical system; Rep. gr. 94 ; Exterior lights, lamps and switches; Structure-borne sound

7 - Nut

- ❑ Qty. 1
- ❑ 4.5 Nm

5.2 Removing and installing fuel pressure sensor - G247-

Special tools and workshop equipment required

- ♦ Measuring tool - T10118-

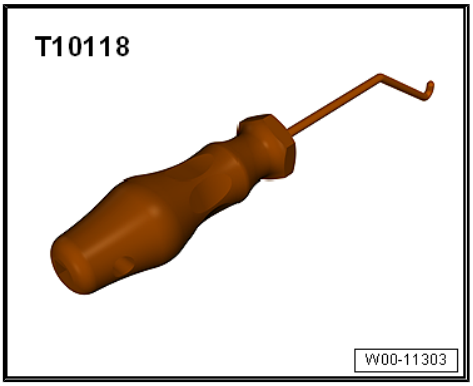

- ♦ Bit (27 mm) - T40218- or commercially available socket (27 mm)

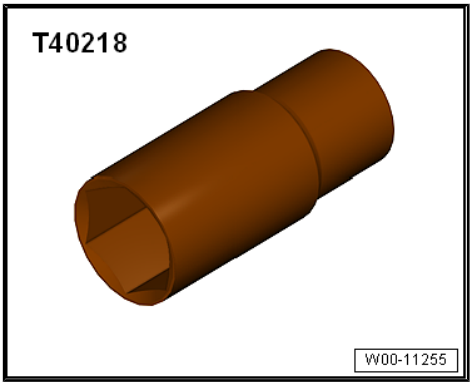

Use ⇒ Vehicle diagnostic tester for checking fuel pressure sender - G247- .

If the fuel pressure sender - G247- fails, the fuel metering valve - N290- is switched off, the electric fuel pump is fully activated and the engine is operated with the fuel pressure which remains. This will reduce engine torque considerably.

Removing

- Remove engine cover panel ⇒ page 57 .
- Remove air filter housing ⇒ page 356 .
- Free coolant hose -2-.
- Remove bolts -arrows-.
- Unclip front side of the air guide -1- by unlocking the retaining tabs arrows. Remove in -direction of arrow-.

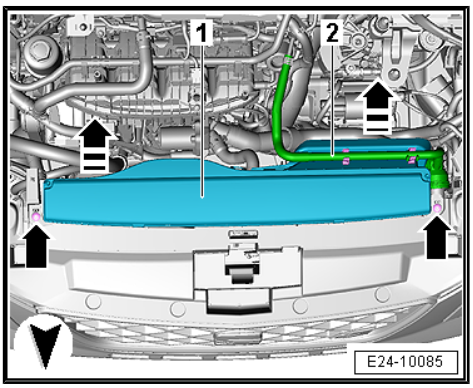

– Unscrew bolts -arrows- for coolant pipe from the intake manifold.

– Remove noise insulation ⇒ General body repairs, exterior; Rep. gr. 66 ; Noise insulation; Assembly overview - noise insulation .

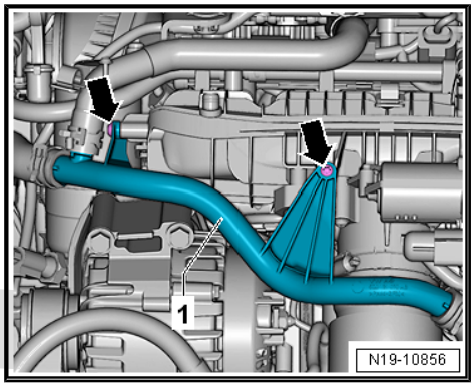

– Free coolant hose -3-.

– Unplug electrical connector -1- at charge pressure sender - G31- .

– Remove bolts -arrows-.

– Loosen hose clip -2- on air hose and pull air hose downwards off throttle valve module - GX3- .

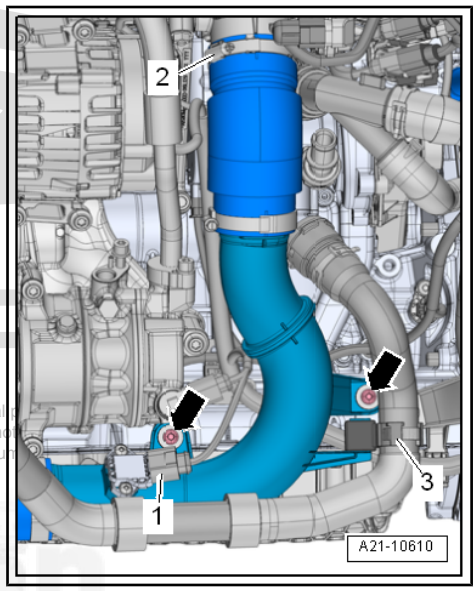

– Remove intake manifold support; to do so, unscrew nut -2- and bolt -3-.

– Remove rubber bush -1- for intake manifold support.

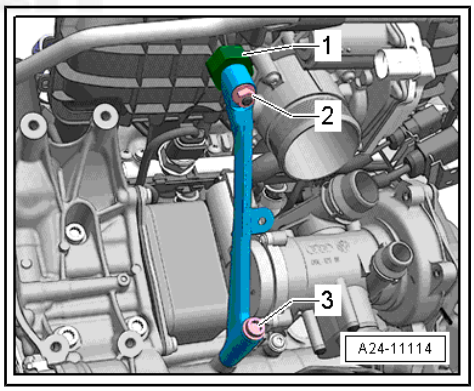

– Release connector on fuel pressure sender - G247- -1- using assembly tool - T10118- .

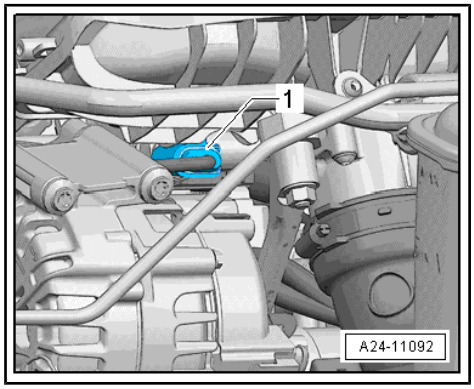

– Pull off connector -arrow- from alternator, otherwise the bit can be caught on the connector!

– Unscrew fuel pressure sender - G247- using bit, 27mm - T40218- .

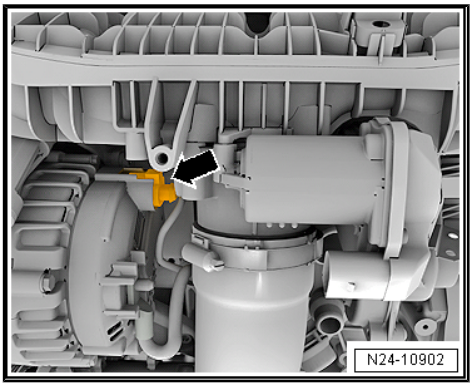

Fitting

Install in reverse order of removal, observing the following:

Specified torques

♦ ⇒ “2.1.1 Assembly overview - fuel rail with injectors, direct injection”, page 343

5.3 Checking fuel pressure sender - G247-

Special tools and workshop equipment required

♦ Pressure sensor tester - VAS 6394-

♦ Adapters - VAS 6394/2-

♦ Adapter for the testing functions - VAS 5570-

♦ Torque wrench - V.A.G 1331-

♦ Vehicle diagnostic and service information system

Operation process

– Remove engine cover panel ⇒ page 57 .

CAUTION

The fuel system is pressurised.

Risk of injury due to fuel which may spurt out.

– **Wear safety goggles.**

– **Wear protection gloves.**

– **Release pressure: place clean cloth around connection and carefully open connection.**

– Remove fuel pressure sender - G247- ⇒ page 369 .

– Instead of fuel pressure sender - G247-, screw in adapter - VAS 6394/2- and tighten to torque specified for fuel pressure sender - G247- .

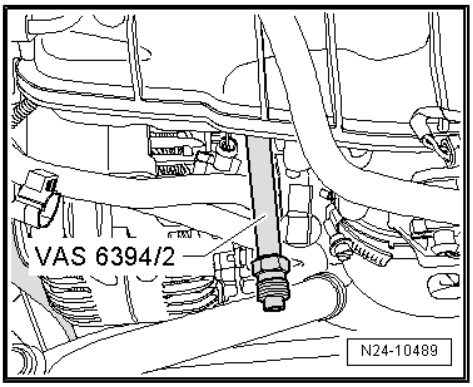

– Open plug -2- of digital pressure gauge - VAS 6394/1- , and screw fuel pressure sender - G247- into opening and tighten it to specified torque.

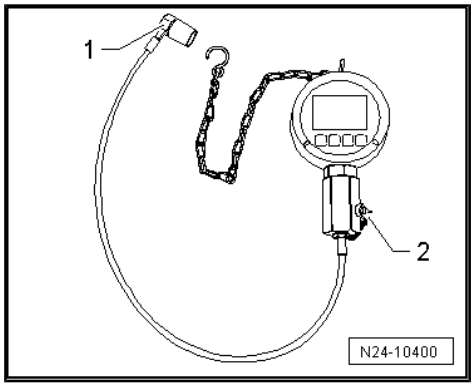

– Use test instrument adapter - VAS 5570- to make electrical connection between vehicle and fuel pressure sender - G247- .

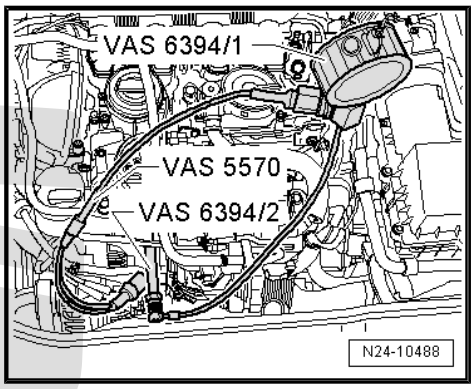

Note

For the steps below, the engine must be started. Therefore, install the intake hose and the air filter housing.

– Connect the ⇒ Vehicle diagnostic tester.

– Switch on ignition.

– Select “Engine electronics” in the self-diagnosis program.

– “Select measured values”.

– Select “Fuel pressure” from the list.

The display zone shows the actual pressure value being transmitted to the engine control unit by the fuel pressure sender - G247- .

– Switch on digital pressure gauge - VAS 6394/1- by pressing key -A- briefly once.

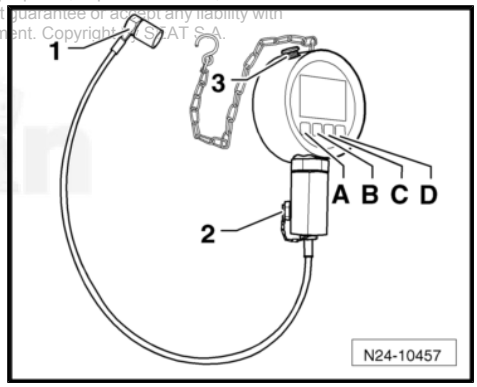

Note

If the -A- button is pressed for 2 seconds, the lighting illuminates for 20 seconds.

Pressure gauge - VAS 6394/1- should indicate 0 bar. If this is not the case, press button -C- once briefly to zero the tester.

– Connect digital manometer - VAS 6394/1- to the Adapter - VAS 6394/2- .

– Start engine.

– Compare the pressure indicated on the pressure gauge - VAS 6394/1- with the actual value indicated in the vehicle diagnostic and service information system .

• The pressure difference should not be more than 5 bar.

– If the deviation is greater than 5 bar, test a new fuel pressure sender - G247- .

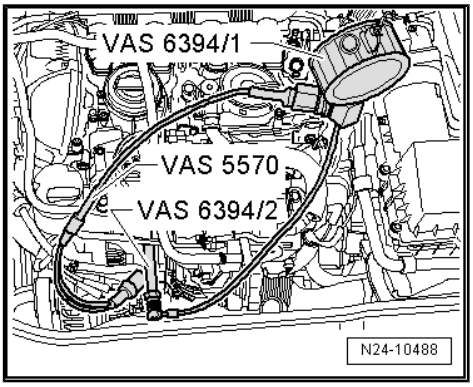

CAUTION

The fuel system is pressurised.

Risk of injury due to fuel which may spurt out.

– **Wear safety goggles.**

– **Wear protection gloves.**

– **Release pressure: place clean cloth around connection and carefully open connection.**

– Screw a new fuel pressure sender - G247- into pressure gauge - VAS 6394/1- .

– Repeat the check with the new fuel pressure sender - G247- and compare both measurement values.

If measured values again fail to correspond:

– Check the electrical connection between the fuel pressure sender - G247- and the engine control unit; refer to ⇒ Current flow diagrams, Electrical fault finding and Fitting locations.

If measured values correspond:

– Install the new fuel pressure sender - G247- ⇒ page 369 .

Specified torques

♦ ⇒ “2.1.1 Assembly overview - fuel rail with injectors, direct injection”, page 343

5.4 Removing and installing fuel pressure sender for low pressure - G410-

Removing

– Remove engine cover panel ⇒ “3.1 Removing and installing engine cover panel”, page 57 .

– Pull off connector -2-.

– Pull off locking clip -1-.

– Pull fuel pressure sender for low pressure - G410- out of fuel rail.

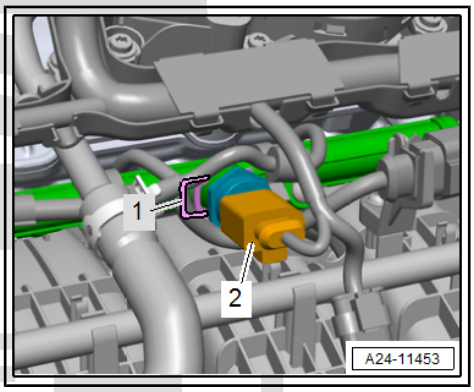

– Unscrew fuel pressure sender for low pressure - G410- -1- from adapter -2-.

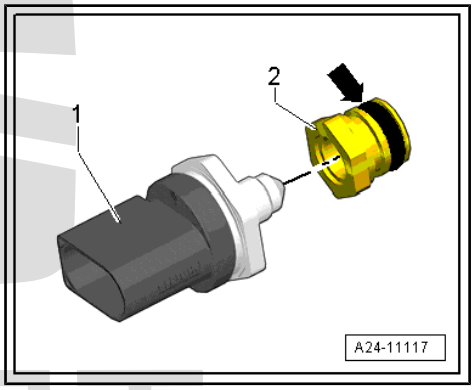

Fitting

– Fit new O-ring -arrow-.

– Screw adapter -2- onto fuel pressure sender for low pressure - G410- -1-.

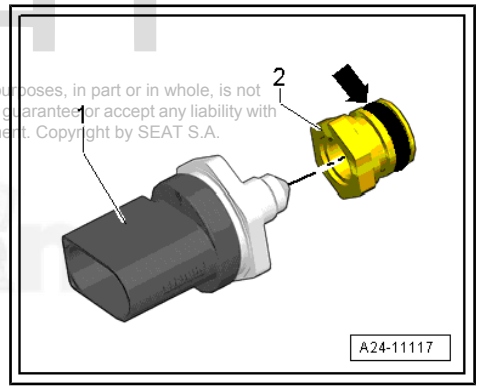

– Carefully slide fuel pressure sender for low pressure - G410- -1- into fuel rail as far as it will go.

– Insert securing clip -1- into groove.

– Connect the electric connector -2-.

Specified torques

♦ ⇒ “2.1 Assembly overview - fuel rail with injectors”, page 343

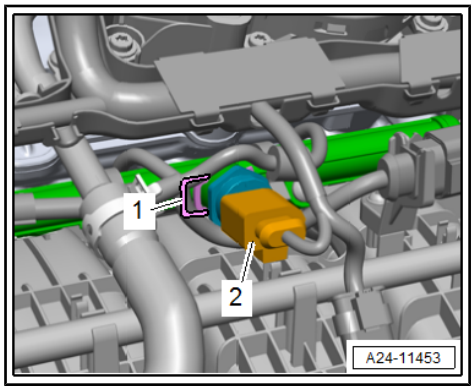

5.5 Remove and install intake manifold sender - GX9-

The intake manifold sender - GX9- consists of intake air temperature sender - G42- and intake manifold pressure sender - G71- .

Removing

– Remove engine cover panel ⇒ page 57 .

– Unplug electrical connector -2-.

– Unscrew the bolt -1-.

– Release fasteners -arrows-, and pull intake manifold sender - GX9- off intake manifold.

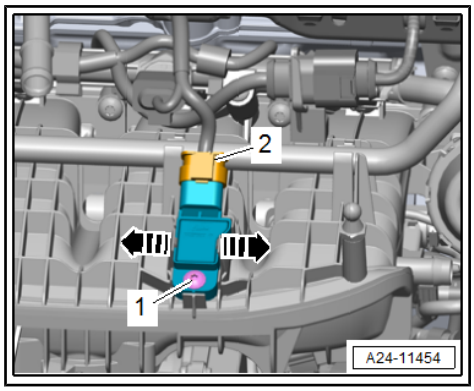

Fitting

Installation is in the reverse sequence of removal.

Specified torques

♦ ⇒ “4.1 Exploded view - intake manifold”, page 358

5.6 Pressure differential sender for particulate filter - G1037-

Special tools and workshop equipment required

- Vehicle diagnostic tester

Removing

- Remove engine cover panel ⇒ page 57 .
- Disconnect electrical connector -arrow-.
- Loosen bolt -1-.
- Carefully pull pressure sensor in a straight line off hoses.

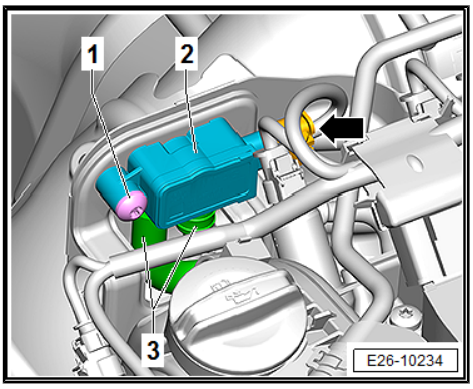

Note

If the elbow stud -2- breaks off, use long-nose pliers to pull the remaining piece out of the hose.

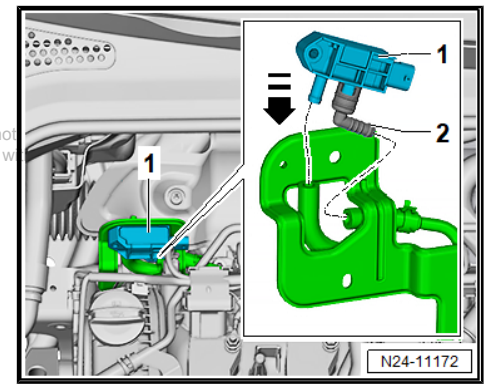

Installation

- Before installing, blow out hoses from pressure differential sender to emission control module with compressed air in direction of emission control module.
- Fit elbow stud -2- onto pressure sensor -1-.
- Moisten connection on pressure sensor and elbow stud with lubricant (water).
- Fit pressure sensor with elbow stud -arrow- onto hoses.
- Tighten pressure sensor, and connect connector.

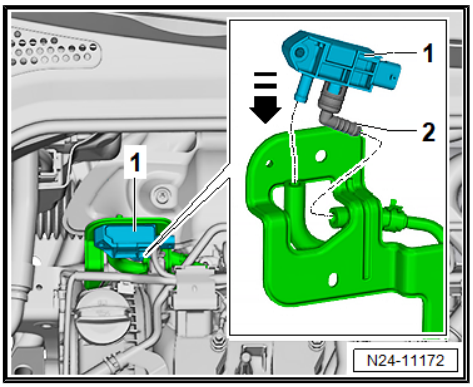

Specified torques

- ⇒ “2.1.4 Assembly overview - bracket and pipes for pressure differential sender for particulate filter G1037 ”, page 420

6 Engine control unit

⇒ “6.1 Removing and installing engine control unit J623 ”, page 376

6.1 Removing and installing engine control unit - J623-

⇒ “6.1.1 Remove and install engine control unit J623 without protective housing”, page 376

⇒ “6.1.2 Removing and installing engine control unit J623 with protective housing”, page 377

6.1.1 Remove and install engine control unit - J623- without protective housing

Special tools and workshop equipment required

- Hot air blower - VAS 1978/14A- with nozzle attachment from wiring harness repair set - VAS 1978 B-

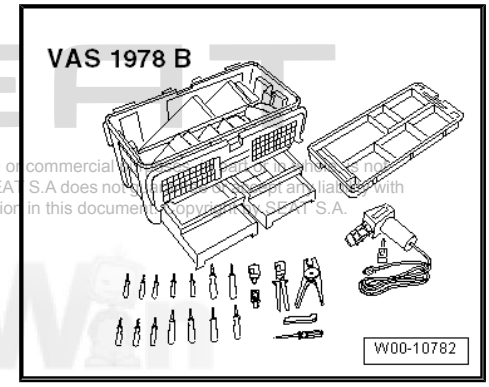

- Small grinder with cutting disc, commercially available
- Vehicle diagnosis tester

Removing

– If the engine control unit is to be renewed, switch on ignition and select the following menu items in the Vehicle diagnostic and service information system :

- `0001 - Renew engine control unit`

– Switch off ignition and remove ignition key.

Note

If the engine control unit comes into contact with the positive battery terminal, permanent damage to the engine control unit will be the consequence. For this reason, the battery always needs to be disconnected prior to removing the engine control unit from its bracket ⇒ Electrical system; Rep. gr. 27 ; Battery; Disconnecting and connecting battery .

– Release and disconnect connectors -2 and 3- for engine control unit - J623- .

– Release fastener -arrow A-, and remove engine control unit - J623- -1- -arrow B-.

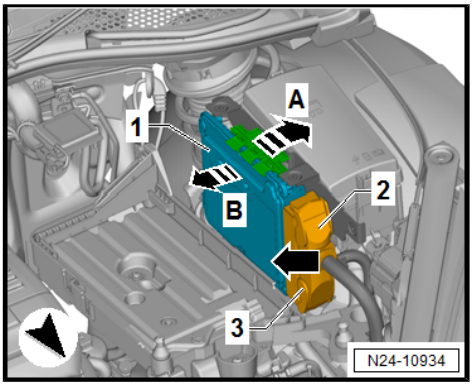

Fitting

Install in the reverse order of removal, observing the following:

– Fit engine control unit - J623- with the lower edge to the front in the direction of the mounting -arrow A- and block the upper edge.

• Lugs on engine control unit must engage in notches at top and bottom of bracket -arrows B-.

– Install battery ⇒ Electrical system; Rep. gr. 27 ; Battery; Disconnecting and reconnecting battery .

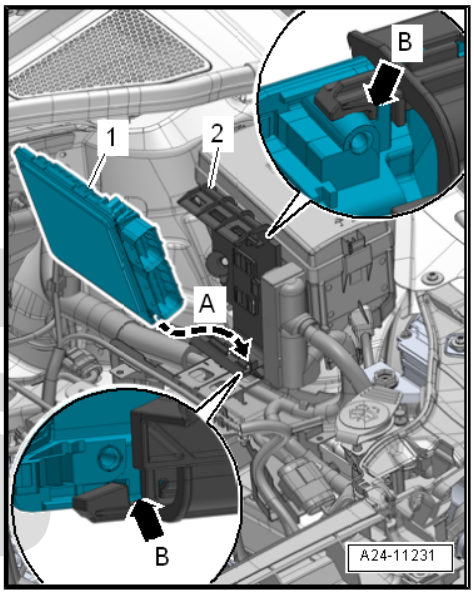

After installing a new engine control unit, the following operation must be performed:

– Switch on ignition, and select the following menu option on vehicle diagnostic tester :

♦ `0001 - Renew engine control unit`

6.1.2 Removing and installing engine control unit - J623- with protective housing

Special tools and workshop equipment required

♦ Hot air blower - VAS 1978/14A- with nozzle attachment from wiring harness repair set - VAS 1978 B-

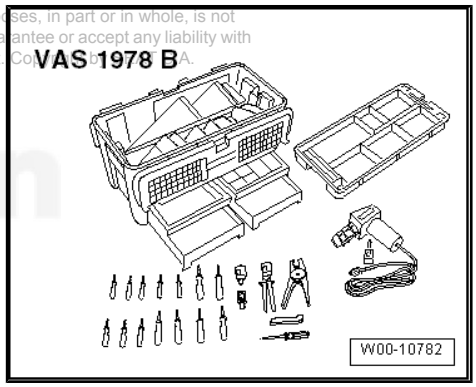

♦ Small grinder with cutting disc, commercially available

♦ Vehicle diagnosis tester

Removing

– If the engine control unit is to be renewed, switch on ignition and select the following menu items in the Vehicle diagnostic and service information system :

♦ `0001 - Renew engine control unit`

– Switch off ignition and remove ignition key.

Note

If the engine control unit comes into contact with the positive battery terminal, permanent damage to the engine control unit will be the consequence. For this reason, the battery always needs to be disconnected prior to removing the engine control unit from its bracket ⇒ Electrical system; Rep. gr. 27 ; Battery; Disconnecting and connecting battery .

– Remove battery ⇒ Electrical system; Rep. gr. 27 ; Battery; Removing and installing battery .

To remove protective housing -1-, unscrew shear bolts -1- as follows:

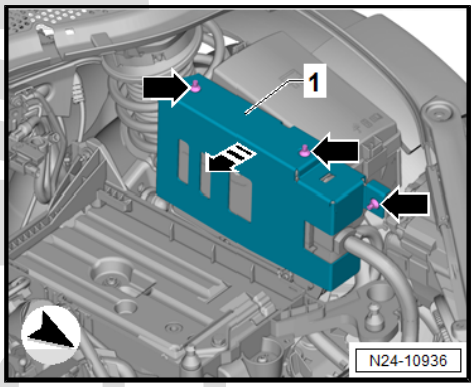

– Make groove (for a screwdriver) in head of shear bolt -1- using a small grinder -2-.

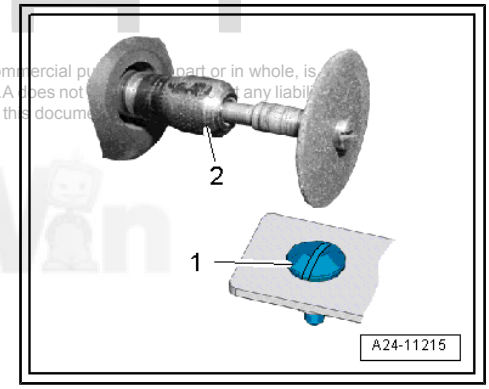

Note

The shear-head bolt threads are coated with locking compound. To unscrew these bolts, the threads must therefore be heated with the hot air blower.

– Select settings on hot air blower as shown in illustration, i.e. set temperature potentiometer -2- to maximum heat output and two-stage air flow switch -3- to position 3.

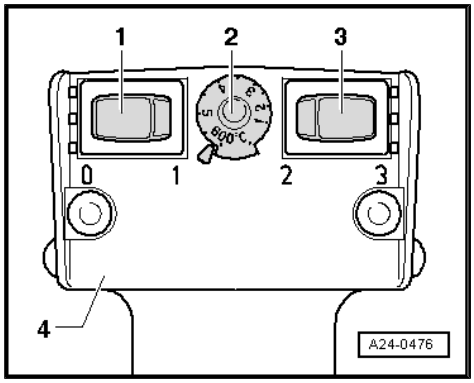

CAUTION

Risk of damage to adjacent components caused by hot air blower. Risk of overheating.

– **If necessary, cover adjacent components.**

– Heat head of shear bolt -1- for approx. 20 to 30 seconds.

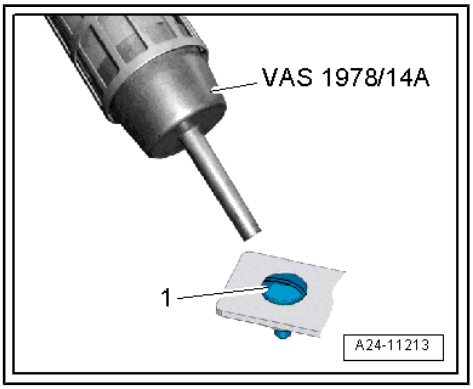

– Unscrew shear bolt -1- using screwdriver -2-.

– Remove protective housing from the engine control unit - J623- .

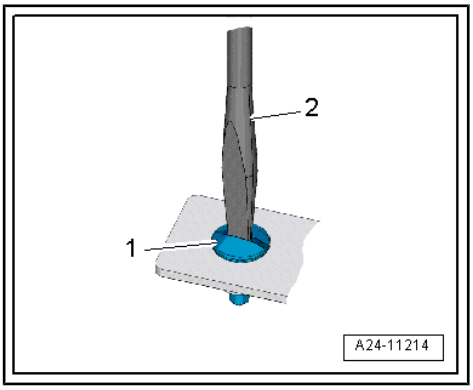

– Release and disconnect connectors -2 and 3- for engine control unit - J623- .

– Release fastener -arrow A-, and remove engine control unit - J623- -1- -arrow B-.

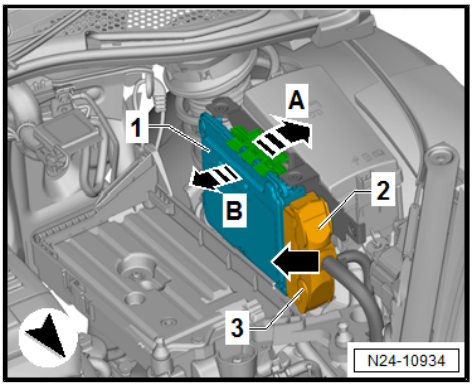

Fitting

Install in the reverse order of removal, observing the following:

– Insert engine control unit - J623- bottom edge first into bracket -arrow A- and lock at top edge.

– Make sure you fit protective housing back on engine control unit - J623- .

– Clean threaded holes for shear bolts to remove any residue from locking fluid. This can be done using a thread tap.

– Always use new shear bolts.

– Install battery ⇒ Electrical system; Rep. gr. 27 ; Battery; Removing and installing battery .

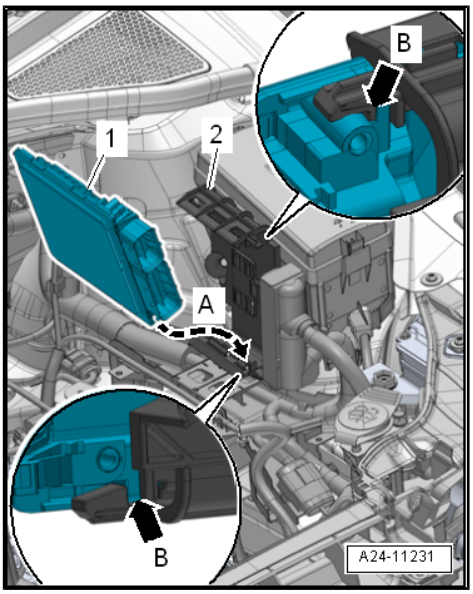

After installing a new engine control unit, the following operation must be performed:

– Switch on ignition, and select the following menu option on vehicle diagnostic tester :

♦ `0001 - Renew engine control unit`

7 High-pressure pump

⇒ “7.1 Exploded view - high-pressure pump”, page 380
⇒ “7.2 High-pressure pump: removing and fitting”, page 381
⇒ “7.3 Removing and installing high-pressure pipe ”, page 384

7.1 Exploded view - high-pressure pump

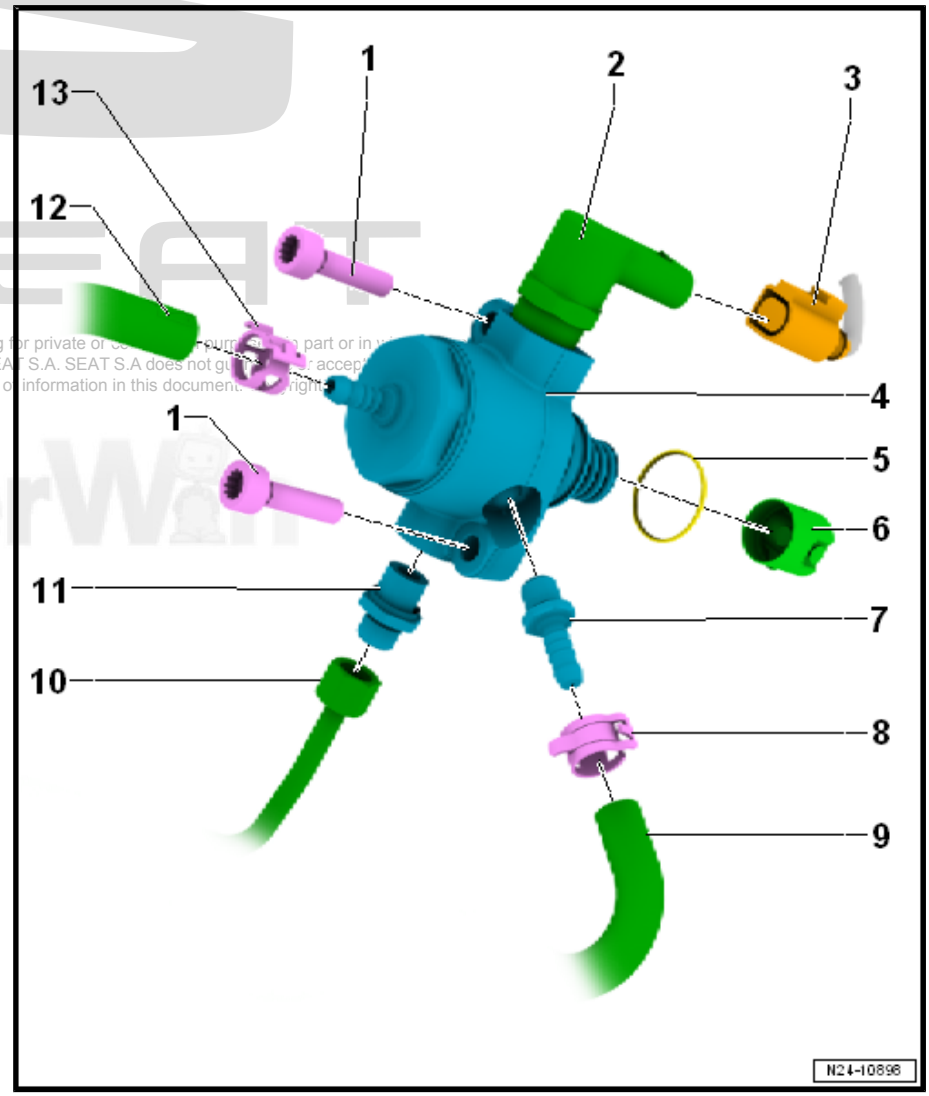

1 - Bolts for the high-pressure pump .

- ❑ Tighten one turn alternately until flange of high-pressure pump makes contact with vacuum pump
- ❑ End torque

  Bolts M6: 8 Nm +90°, replace after removing the bolts

  M8 bolts: 20 Nm

2 - Fuel metering valve - N290-

3 - Electric connector

- ❑ For fuel metering valve - N290-

4 - High-pressure pump

- ❑ Fuel tank contains electric fuel pump which pumps fuel to mechanical high-pressure pump.
- ❑ When installing the high-pressure pump, it is essential to ensure that no dirt enters the fuel system.
- ❑ Fuel pipes must be free of tension when installed.
- ❑ Check O-ring and renew if damaged
- ❑ Removing and fitting ⇒ page 381

5 - O-ring

- ❑ Renew if damaged.

6 - Tappet with roller

- ❑ Installation position: roller faces towards camshaft.
- ❑ May remain lodged in vacuum pump when high-pressure pump is removed

7 - Connecting piece for fuel line

- ❑ Only for engines with intake manifold injectors
- ❑ When renewing high-pressure pump, the connecting piece may have to be transferred from the old pump
- ❑ Loosen and tighten connecting piece using a »long« 15 mm socket
- ❑ Union, 15 Nm
- ❑ Plug, 20 Nm

8 - Spring type clip

- ❑ Renew

9 - Fuel line

- ❑ Only for engines with intake manifold injectors
- ❑ to fuel rail for intake manifold injectors

10 - High-pressure pipe

- ❑ to fuel rail for combustion chamber injectors
- ❑ Moisten ball of high-pressure pipe with engine oil
- ❑ High-pressure pipe must be free of tension when installed (make sure all parts are clean)
- ❑ Removing and installing ⇒ page 384
- ❑ Union nut 27 Nm, wait for 1 minute and retighten to 27 Nm

11 - Connecting piece for high-pressure line

- ❑ When detaching the high-pressure line, secure the connection against twisting
- ❑ If union is released, it must be renewed.
- ❑ 40 Nm

12 - Fuel supply line

13 - Spring type clip

- ❑ Renew

7.2 High-pressure pump: removing and fitting

Special tools and workshop equipment required

- Open end spanner insert, AF 17 - V.A.G 1331/6-

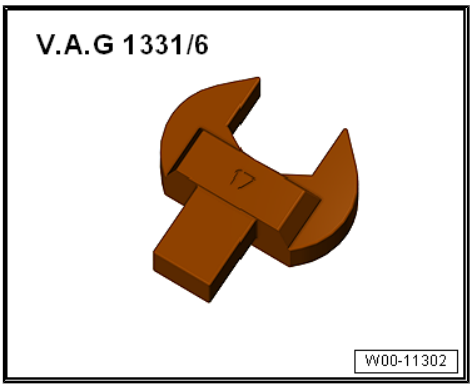

Note

- *high-pressure pump may only be removed when the engine is cold.*
- *When installing the high-pressure pump, it is essential to ensure that no dirt enters the fuel system.*
- *Collect escaping fuel with a cleaning cloth.*
- *Check O-ring of high-pressure pump and renew it if damaged.*
- *If high-pressure pipe connection ⇒ Item 11 (page 381) is released, it must be renewed.*

Removing

– Remove engine cover panel ⇒ page 57 .

– For reasons of space, remove the air filter housing together with the intake hose ⇒ page 356 .

– Release fastener -arrow- and detach wiring duct -4- from coolant pipe.

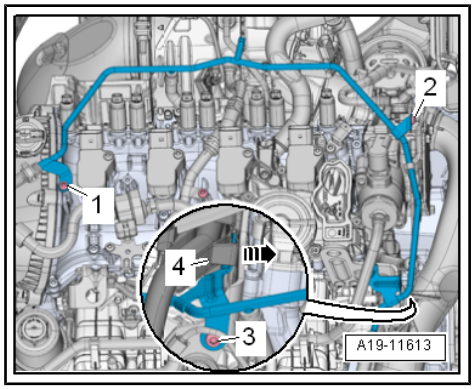

– Unscrew bolt -1- for air pipe.

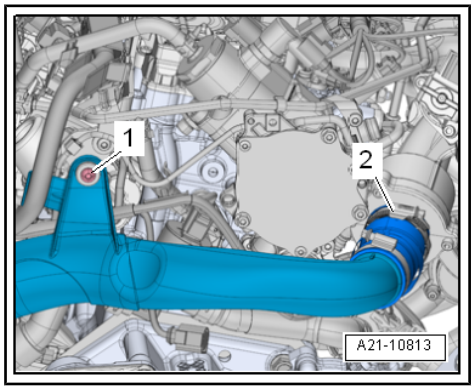

– Push air pipe aside slightly and unscrew pipe clamp -arrow-.

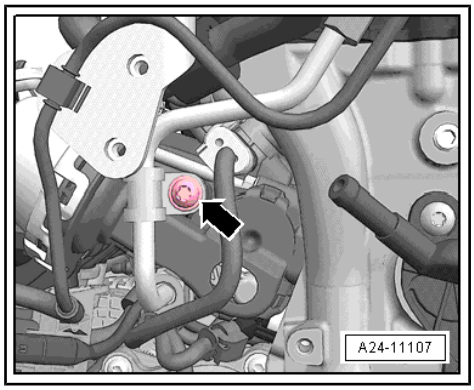

CAUTION

The fuel system is pressurised.

Risk of injury due to fuel which may spurt out.

- **Wear safety goggles.**
- **Wear protection gloves.**
- **Release pressure: place clean cloth around connection and carefully open connection.**

– Counterhold on hexagon -A-, and loosen union nut -arrow-. Remove high-pressure line.

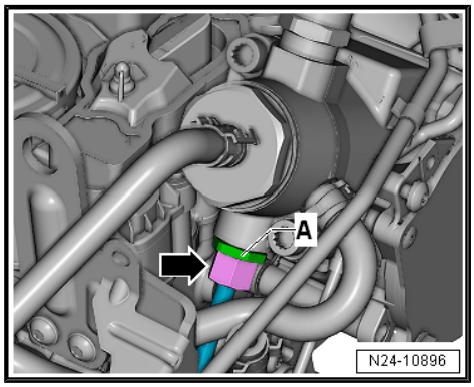

– Disconnect connector -1- on fuel metering valve - N290- .
– Remove fuel hoses -2- and -3-.
– Remove bolts -arrows-.
– Carefully pull out high-pressure pump. When doing so, ensure that high-pressure pipe is not bent.
– Remove roller plunger.

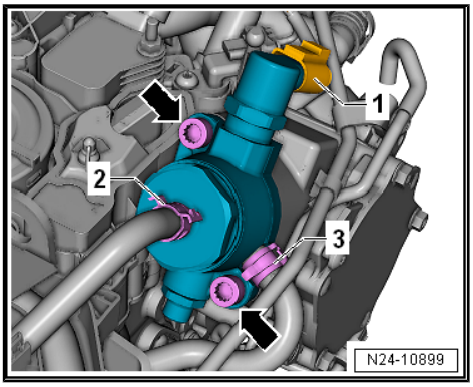

Fitting

– Before fitting, check roller tappet for damage and renew if necessary.
– Insert roller tappet into vacuum pump as shown.
– Turn crankshaft until roller tappet is positioned at lowest point.
– Moisten ball of high-pressure pipe with engine oil.
– Inspect O-ring of high-pressure pump, and coat it slightly with clean engine oil.

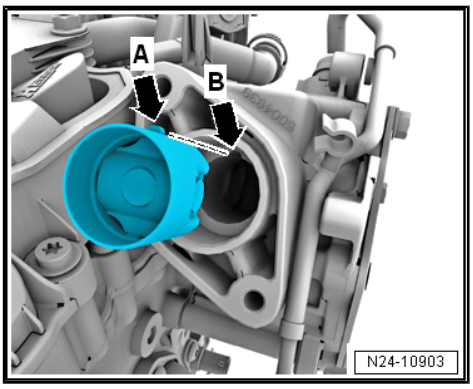

– Insert high-pressure pump into vacuum pump. When doing this, take note of high-pressure pipe.
– Tighten bolts -arrows- one turn alternately until flange of high-pressure pump makes contact with vacuum pump.
– Tighten bolts to specified torque, tightening torque ⇒ page 380 .
– Connect fuel hoses -2- and -3-, and secure them with spring-type clips.
– Tighten union nut of high-pressure pipe hand-tight.

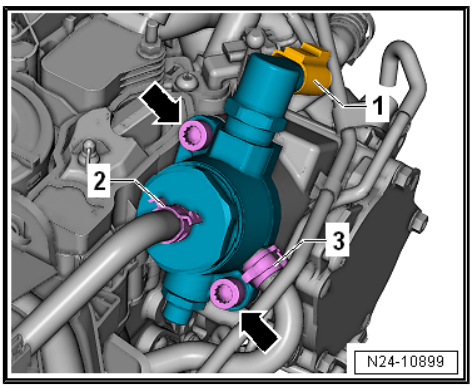

– Install clamp -arrow-, and tighten it to 5 Nm.

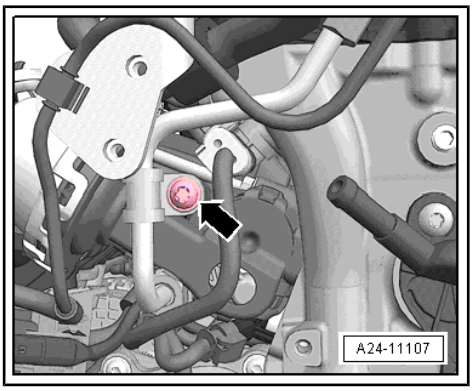

– Counterhold on hexagon -A-, and tighten union nut -arrow-.
– Wait at least 1 minute and check tightening torque.

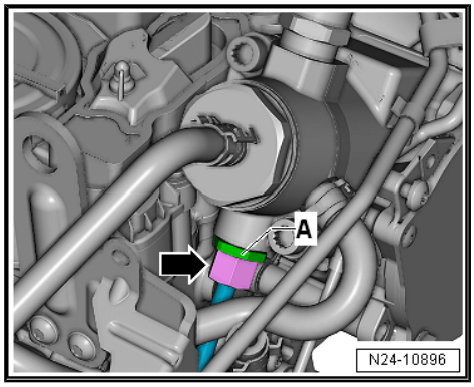

– Connect fuel hoses -2- and -3-, and secure them with spring-type clips.
– Connect connector -1- on fuel metering valve - N290- .

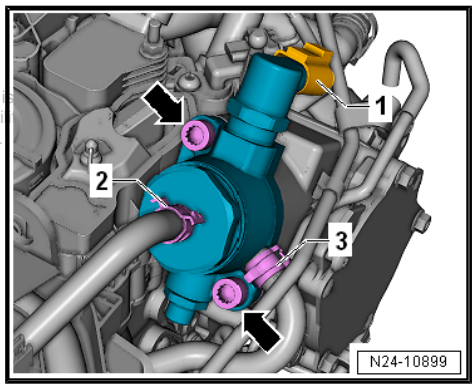

Further assembly is basically a reverse of the dismantling sequence.

Note

Upon completion of any repair work, start the engine and check the fuel system for leaks.

Specified torques

♦ ⇒ “7.1 Exploded view - high-pressure pump”, page 380

7.3 Removing and installing high-pressure pipe

Special tools and workshop equipment required

♦ Socket, SW 17 - T10456-

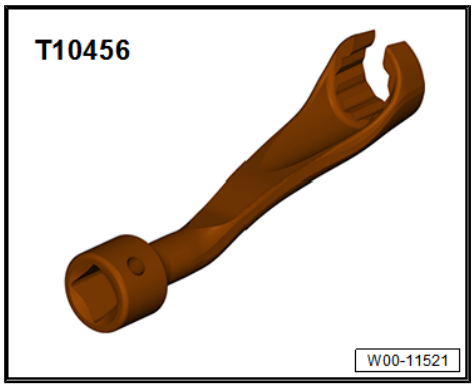

♦ Open end spanner insert, AF 17 - V.A.G 1331/6-

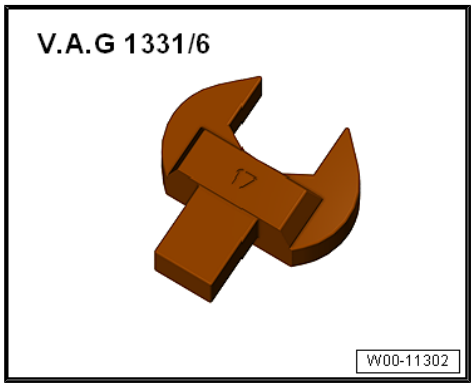

Removing

– Remove engine cover panel ⇒ page 57 .

– Remove air pipe between turbocharger and charge air cooler ⇒ page 329 .

– Unbolt clamp -arrow-.

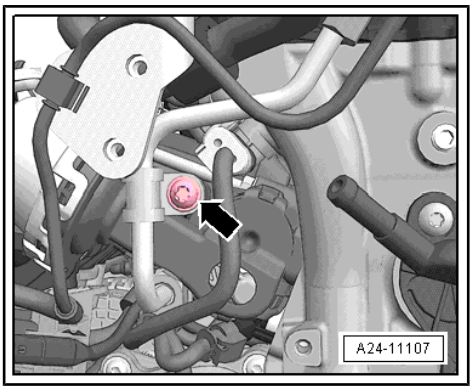

– Loosen union nut on fuel rail -arrow- using socket AF 17 mm - T10456- .

CAUTION

The fuel system is pressurised.

Risk of injury due to fuel which may spurt out.

- **Wear safety goggles.**
- **Wear protection gloves.**
- **Release pressure: place clean cloth around connection and carefully open connection.**

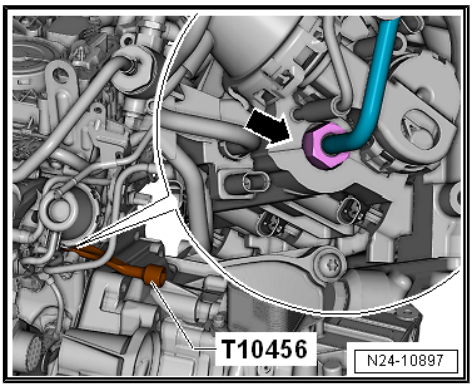

– Counterhold on hexagon -A-, and loosen union nut -arrow-. Remove high-pressure pipe.

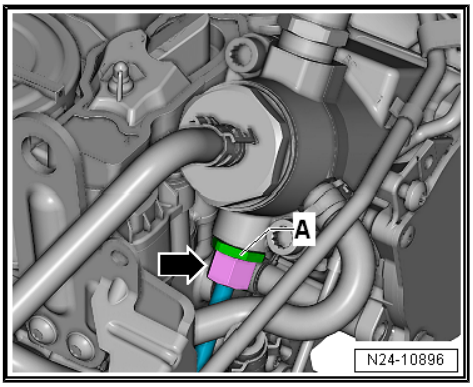

Fitting

– Moisten balls of high-pressure pipe with engine oil and install high-pressure pipe.

– Tighten union nuts by hand and align high-pressure pipe free of stress.

– Install clamp -arrow-, and tighten it to 5 Nm.

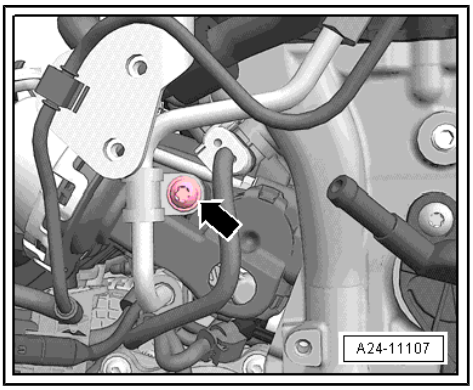

– Tighten union nut on fuel rail -arrow- using socket AF 17 mm - T10456- .

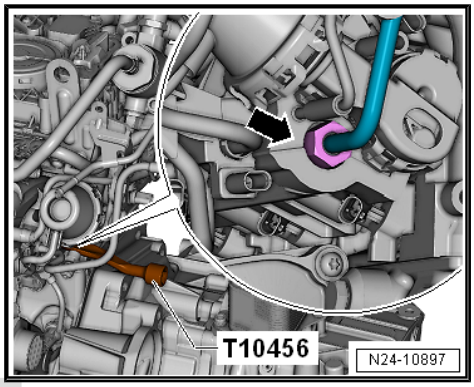

– Counterhold on hexagon -A-, and tighten union nut -arrow- using open end spanner insert, AF 17 mm - V.A.G 1331/6- .

– Wait at least 1 minute and check tightening torque of union nuts.

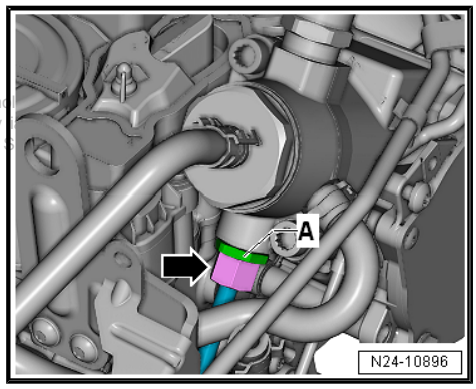

Further assembly is basically the reverse of the removal procedure.

Note

Upon completion of any repair work, start the engine and check the fuel system for leaks.

Specified torques

♦ ⇒ “7.1 Exploded view - high-pressure pump”, page 380

8 Lambda probe

⇒ "8.1 Exploded view - Lambda probe", page 387

⇒ "8.2 Removing and installing Lambda probe", page 388

8.1 Exploded view - Lambda probe

Note

- *New Lambda sensors are coated with an assembly paste. This paste must not get into the slots on the probe body.*
- *In the case of a used lambda sensor grease only the thread with high-temperature paste. This paste must not get into the slots on the probe body. High-temperature paste ⇒ Electronic Parts Catalogue .*
- *When re-installing the electric wire of the lambda sensor, it is important that these are connected to the same locations. Contact of the electric wires with the exhaust pipe must be prevented in all cases.*

1 - Lambda probe 1 after catalytic converter - GX7-

- ❑ comprising:

  Lambda probes after the catalytic converter - G130-

  Lambda probe heater 1 after catalytic converter - Z29-

- ❑ Removing or installing ⇒ page 389
- ❑ Specified torque: 55 Nm

2 - Lambda sensor 1 before catalytic converter - GX10-

- ❑ comprising:

  Lambda sensor - G39-

  Lambda probe heater - Z19-

- ❑ Removing or installing ⇒ page 388
- ❑ Specified torque: 55 Nm

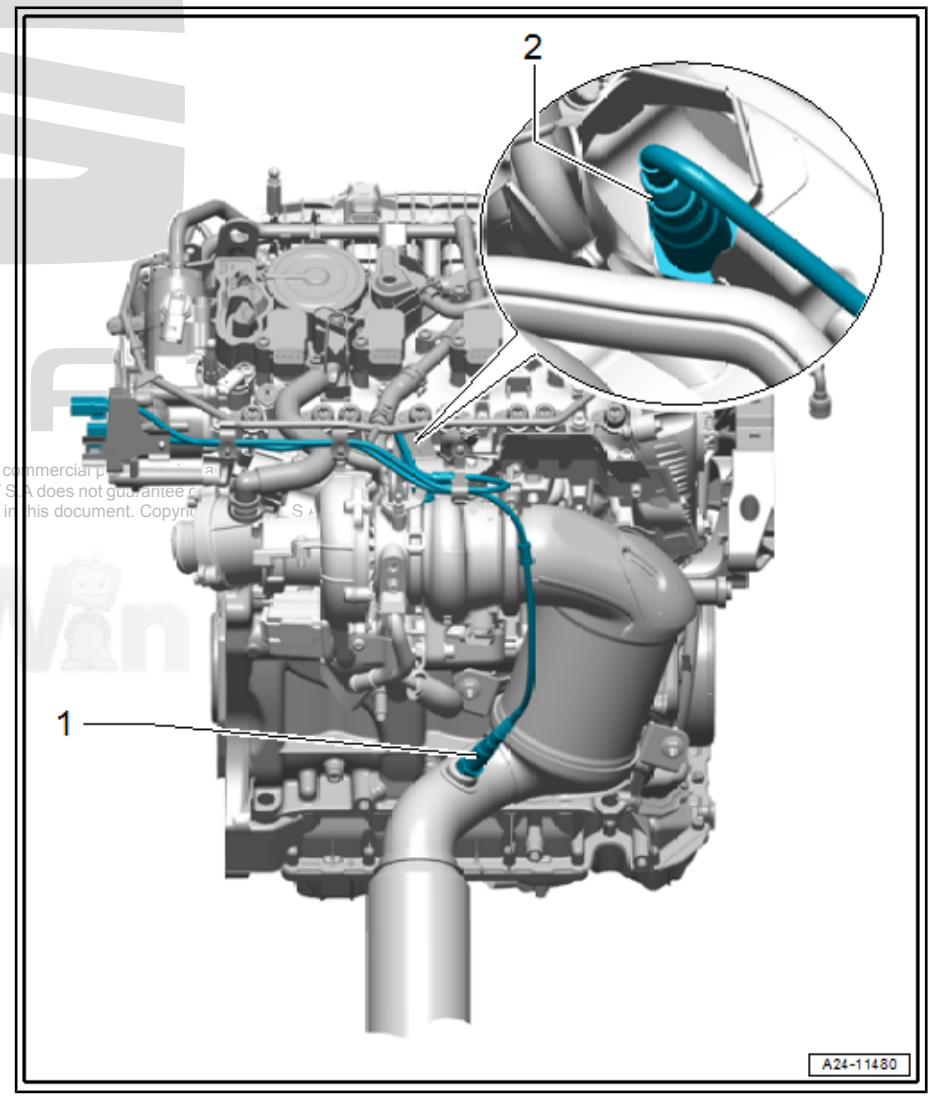

Lambda probe connectors

1 - Connector for Lambda probe 1 after catalytic converter - GX7-

2 - Electrical connector from the Lambda probe 1 before catalytic converter - GX10-

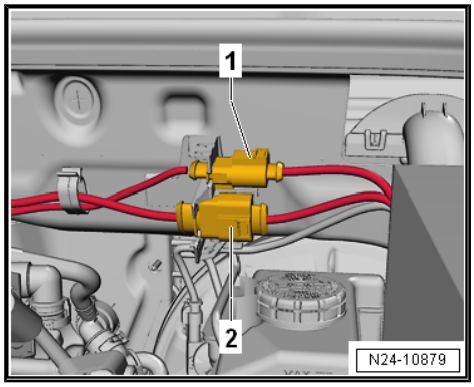

8.2 Removing and installing Lambda probe

⇒ "8.2.1 Removing and installing Lambda probe 1 before catalytic converter GX10 ", page 388

⇒ "8.2.2 Removing and installing Lambda probe 1 after catalytic converter GX7 ", page 389

8.2.1 Removing and installing Lambda probe 1 before catalytic converter - GX10-

Lambda probe 1 before catalytic converter - GX10- comprises:

- Lambda sensor - G39-
- Lambda probe heater - Z19-

Special tools and workshop equipment required

- Lambda probe open ring spanner set - 3337-

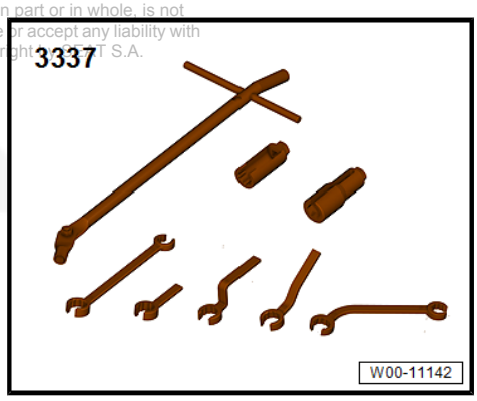

- Torque wrench - V.A.G 1332-

Removing

– Detach electrical connector -2- of Lambda probe 1 before catalytic converter - GX10- .

– Lay wires on plenum chamber bulkhead to one side.

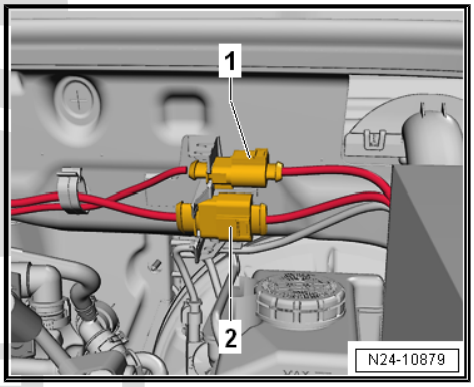

– Unscrew Lambda probe 1 before catalytic converter - GX10- -1- using tool from Lambda probe open ring spanner set - 3337- .

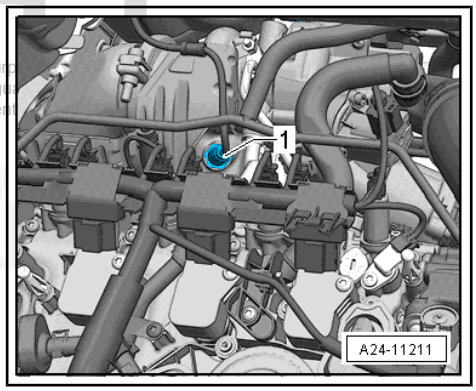

Fitting

When installing, pay attention to the following points:

Note

- *New Lambda sensors are coated with an assembly paste. This paste must not get into the slots on the probe body.*
- *In the case of a used lambda sensor grease only the thread with high-temperature paste. This paste must not get into the slots on the probe body. High-temperature paste ⇒ Electronic parts catalogue (ETKA)*
- *When re-installing the electric wire of the lambda sensor, it is important that these are connected to the same locations. Contact of the electric wires with the exhaust pipe must be prevented in all cases.*

Specified torques

- ⇒ “8.1 Exploded view - Lambda probe”, page 387

8.2.2 Removing and installing Lambda probe 1 after catalytic converter - GX7-

Lambda probe 1 after catalytic converter - GX7- comprises:

- Lambda probes after the catalytic converter - G130-
- Lambda probe heater 1 after catalytic converter - Z29-

Special tools and workshop equipment required

- Lambda probe open ring spanner set - 3337/7-

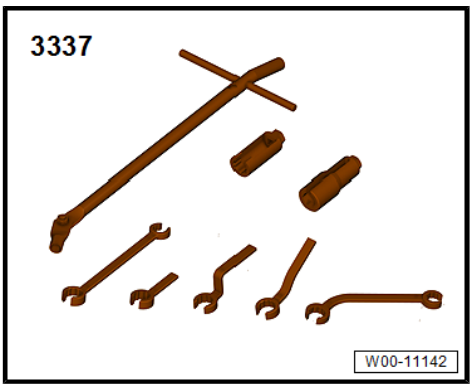

- Torque wrench - V.A.G 1332-

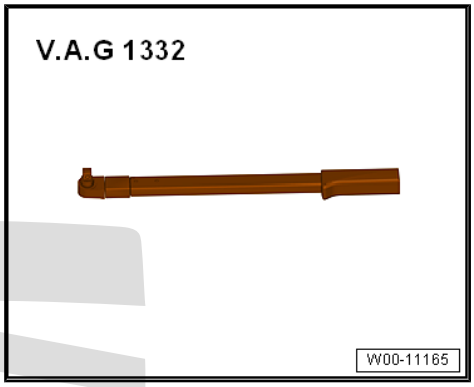

Removing

– Detach electrical connector -1- of Lambda probe 1 after catalytic converter - GX7- .

– Lay wires on plenum chamber bulkhead to one side.

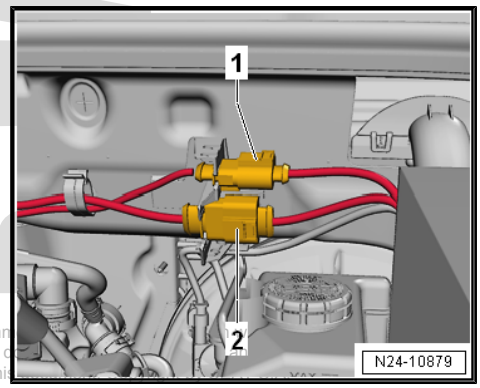

– Unscrew the Lambda probe -1- using tool from Lambda probe open ring spanner set - 3337/7- .

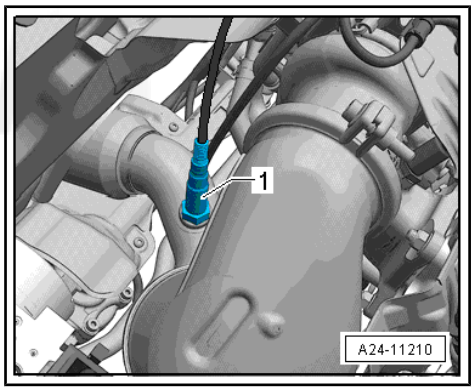

Fitting

When installing, pay attention to the following points:

Note

- *New Lambda sensors are coated with an assembly paste. This paste must not get into the slots on the probe body.*
- *In the case of a used lambda sensor grease only the thread with high-temperature paste. This paste must not get into the slots on the probe body. High-temperature paste ⇒ Electronic parts catalogue (ETKA)*
- *When re-installing the electric wire of the lambda sensor, it is important that these are connected to the same locations. Contact of the electric wires with the exhaust pipe must be prevented in all cases.*

Specified torques

- ⇒ “8.1 Exploded view - Lambda probe”, page 387

26 – Exhaust system

1 Exhaust pipes/silencers

1.1 Exploded view - silencers

1.1.1 Assembly overview - silencers, engine codes CJSA , CJSB, Leon SC

Original equipment as single assembly together with rear silencer; to be renewed individually in event of repair

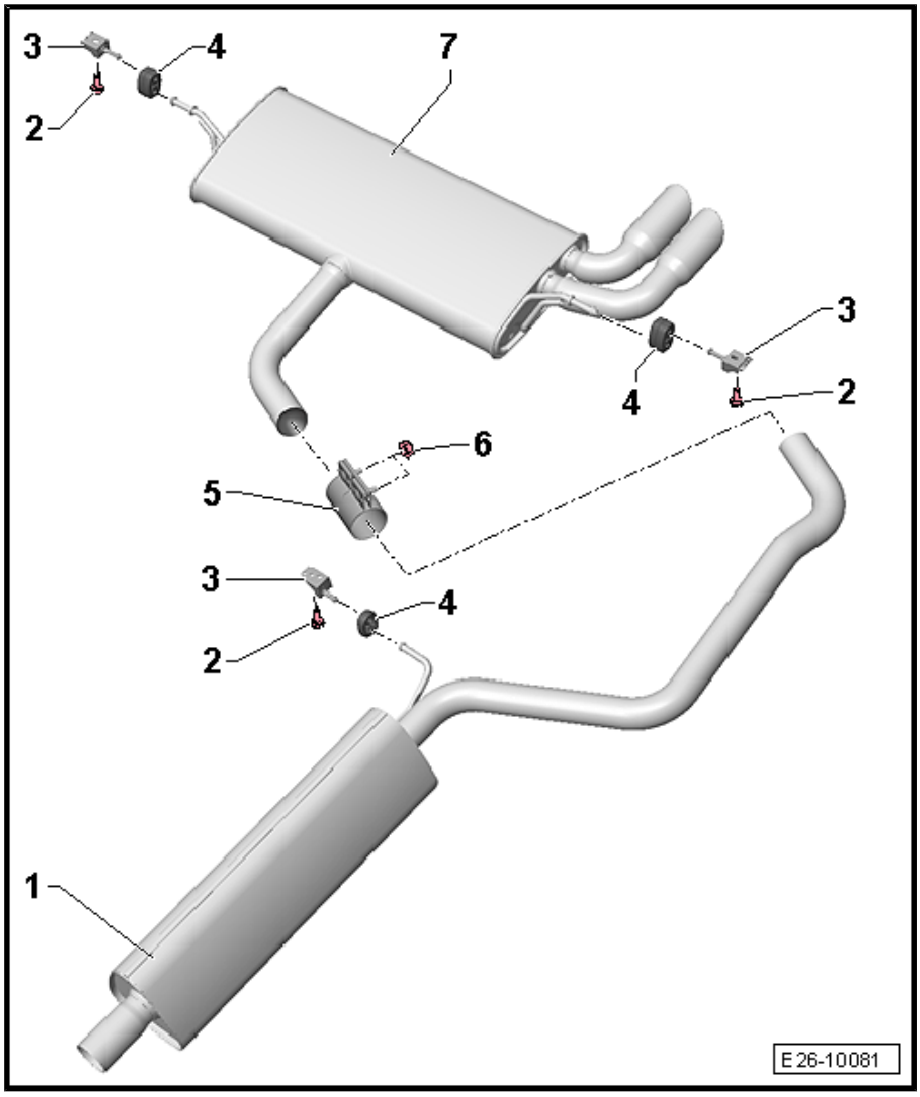

1 - Front silencer

- ❑ Combined in one unit with rear silencer as original equipment. Can be renewed individually for repair purposes.
- ❑ Removing and fitting ⇒ page 405
- ❑ Separating point ⇒ page 408
- ❑ Stress-free alignment of exhaust system ⇒ page 411

2 - Bolt

- ❑ 20 Nm

3 - Support plate

4 - Retaining rings

- ❑ Renew if damaged.

5 - Clamps (rear)

- ❑ Before tightening, align exhaust system so it is free of stress ⇒ page 411
- ❑ Installation position ⇒ page 392 .
- ❑ Tighten bolted connections evenly

6 - Nut

- ❑ 30 Nm

7 - Rear silencer

- ❑ In the original factory equipment, this is a single piece with the centre silencer. Can be renewed individually for repair purposes.
- ❑ Removing and fitting ⇒ page 401
- ❑ Separating point ⇒ page 408
- ❑ Stress-free alignment of exhaust system ⇒ page 411

Installation position of rear clamp

– Fit clamp in position shown.

• Bolt connections face to left

• Bolt -arrow- must not protrude beyond lower edge of clamp.

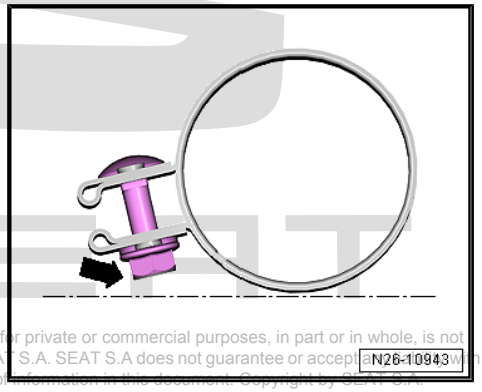

1.1.2 Assembly overview - silencers, engine codes CJSA , CJSB, Leon SC, 5-door

Original equipment as single assembly together with rear silencer; to be renewed individually in event of repair

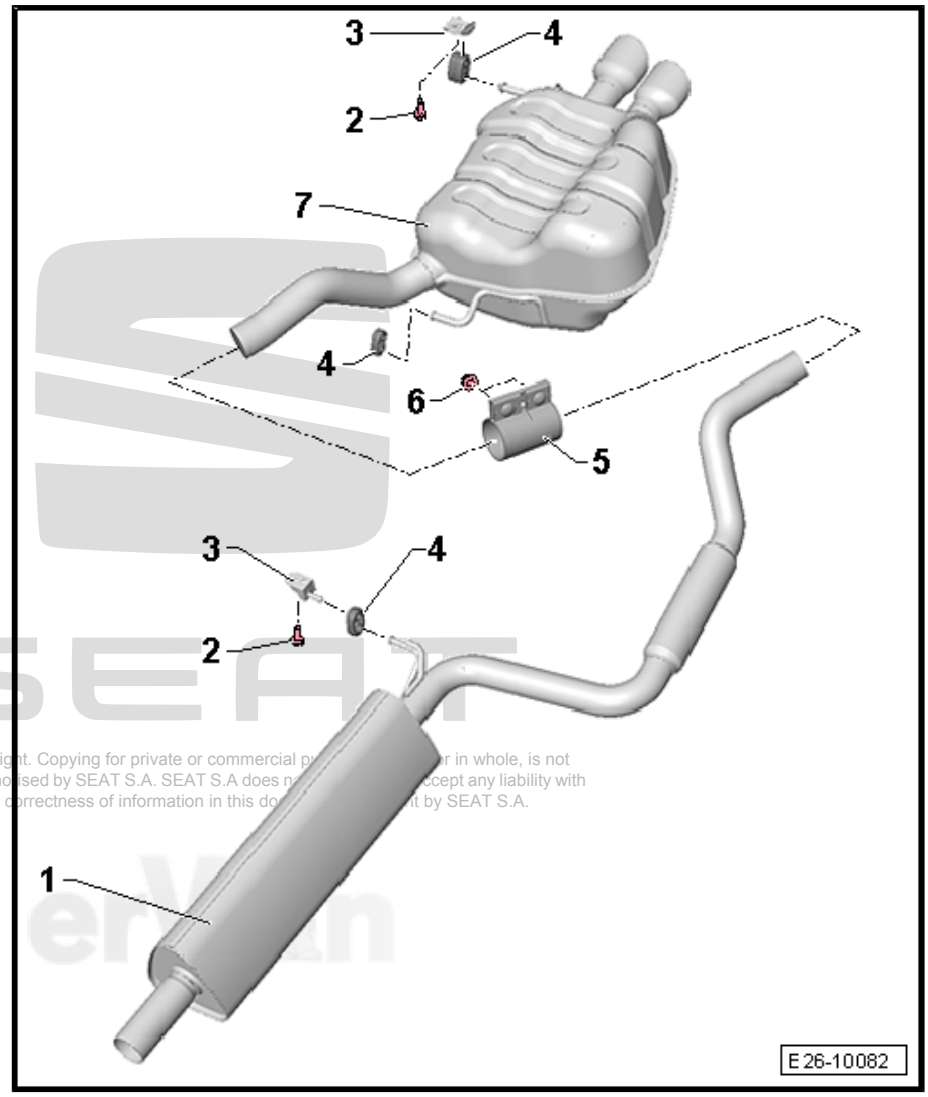

1 - Front silencer

- ❑ Combined in one unit with rear silencer as original equipment. Can be renewed individually for repair purposes.
- ❑ Removing and fitting ⇒ page 406
- ❑ Separating point ⇒ page 408
- ❑ Stress-free alignment of exhaust system ⇒ page 411

2 - Bolt

- ❑ 20 Nm

3 - Support plate

4 - Retaining rings

- ❑ Renew if damaged.

5 - Clamps (rear)

- ❑ Before tightening, align exhaust system so it is free of stress ⇒ page 411
- ❑ Installation position ⇒ page 394 .
- ❑ Tighten bolted connections evenly

6 - Nut

- ❑ 30 Nm

7 - Rear silencer

- ❑ In the original factory equipment, this is a single piece with the centre silencer. Can be renewed individually for repair purposes.
- ❑ Removing and fitting ⇒ page 402
- ❑ Separating point ⇒ page 408
- ❑ Stress-free alignment of exhaust system ⇒ page 411

Installation position of rear clamp

– Fit clamp in position shown.

- Bolt connections face to left
- Bolt -arrow- must not protrude beyond lower edge of clamp.

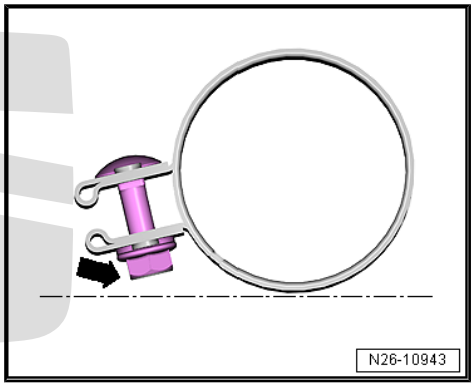

1.1.3 Assembly overview - silencer, engine codes CJSA, CJSB, CJXC, Leon ST

Original equipment as single assembly together with rear silencer; to be renewed individually in event of repair

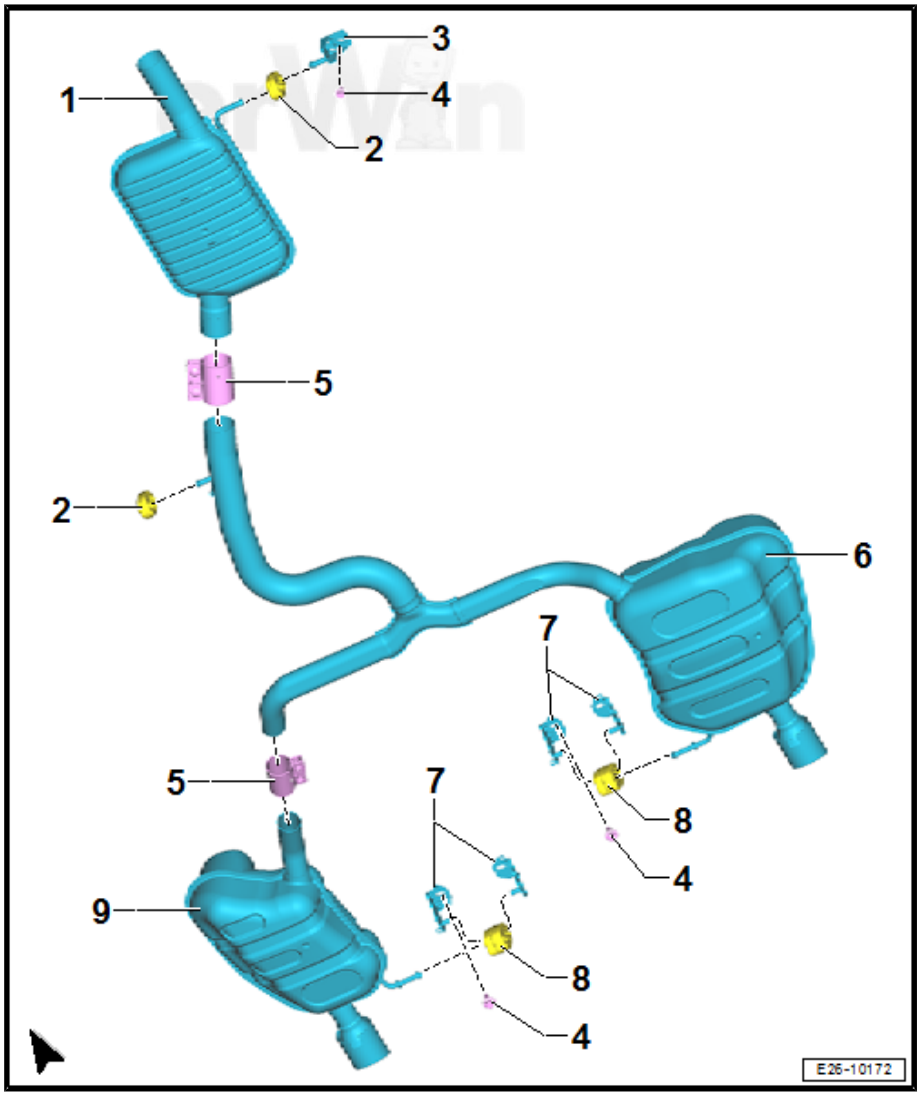

1 - Middle silencer

- ❑ Disconnecting exhaust pipes/silencers ⇒ page 408
- ❑ Stress-free alignment of exhaust system ⇒ page 411

2 - Retaining rings

- ❑ Renew if damaged

3 - Support

4 - Bolt

- ❑ 20 Nm

5 - Tension sleeve

- ❑ Installation position ⇒ page 397 .
- ❑ Stress-free alignment of exhaust system ⇒ page 411
- ❑ Tighten bolted connections evenly
- ❑ 30 Nm

6 - Rear silencer (right-side)

- ❑ Original equipment as single assembly together with rear silencer; to be renewed individually in event of repair
- ❑ Disconnecting exhaust pipes/silencers ⇒ page 408
- ❑ Stress-free alignment of exhaust system ⇒ page 411

7 - Support plate

8 - Retaining rings

- ❑ Renew if damaged

9 - Rear silencer (left-side)

- ❑ Disconnecting exhaust pipes/silencers ⇒ page 408
- ❑ Stress-free alignment of exhaust system ⇒ page 411

1.1.4 Assembly overview - silencer, Cupra ST Carbon Fiber Kit

Original equipment as single assembly together with rear silencer; to be renewed individually in event of repair

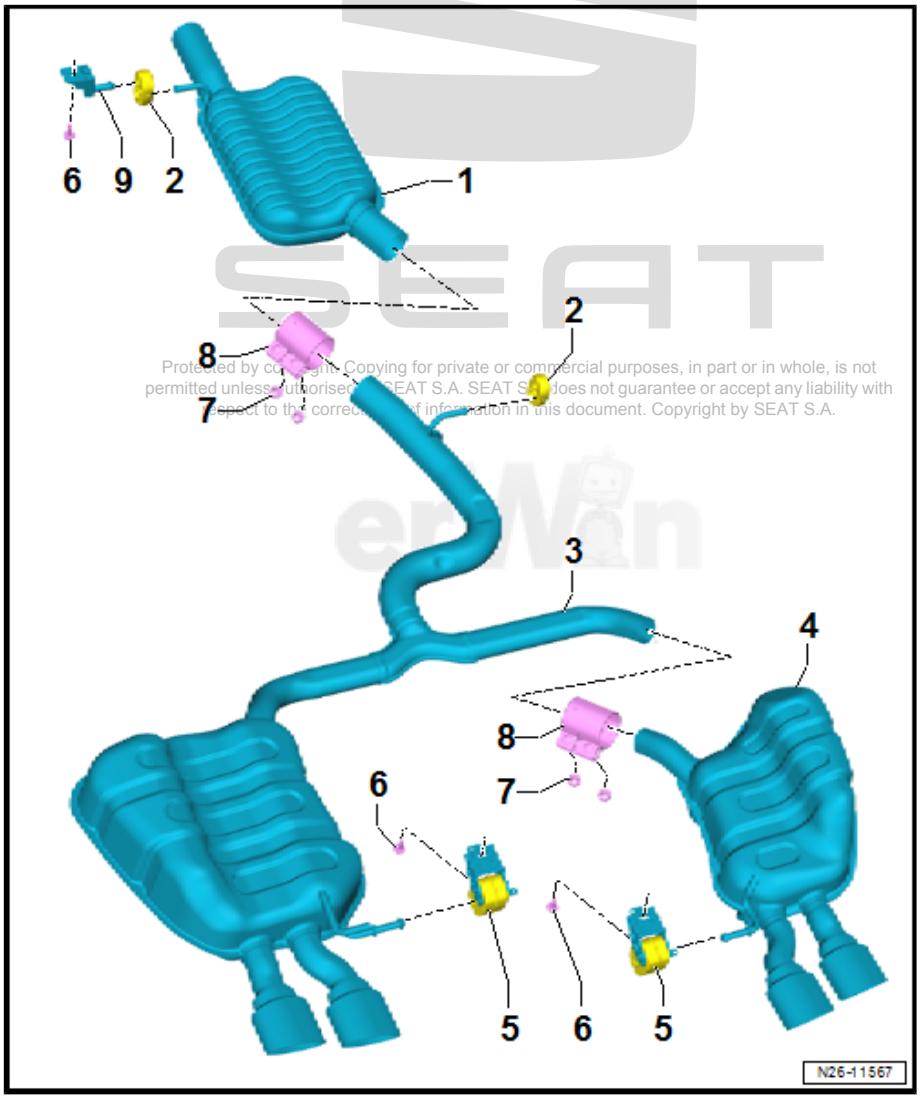

1 - Middle silencer

- ❑ Separating exhaust pipes from silencers ⇒ page 411
- ❑ Aligning exhaust system free of tension ⇒ page 411 .

2 - Retaining rings

- ❑ Renew if damaged

3 - Rear silencer

- ❑ Original equipment as single assembly together with rear silencer; to be renewed individually in event of repair
- ❑ Disconnecting exhaust pipes/silencers ⇒ page 408
- ❑ Stress-free alignment of exhaust system ⇒ page 411

4 - Rear silencer

- ❑ Original equipment as single assembly together with rear silencer; to be renewed individually in event of repair
- ❑ Separating exhaust pipes from silencers ⇒ page 410
- ❑ Aligning exhaust system free of tension ⇒ page 411 .

5 - Support plate

- ❑ Renew if damaged.
- ❑ 2x

6 - Bolts

- ❑ 3x
- ❑ 20 Nm.

7 - Nuts

- ❑ 30 Nm.

8 - Clamping sleeve

- ❑ Installation position ⇒ page 397 .
- ❑ Stress-free alignment of exhaust system ⇒ page 411

- ❑ Tighten bolted connections evenly

9 - Bracket

1.1.5 Assembly overview - silencers, engine codes CJXA, CJXE, CJXH, Leon SC, 5-door

Original equipment as single assembly together with rear silencer; to be renewed individually in event of repair

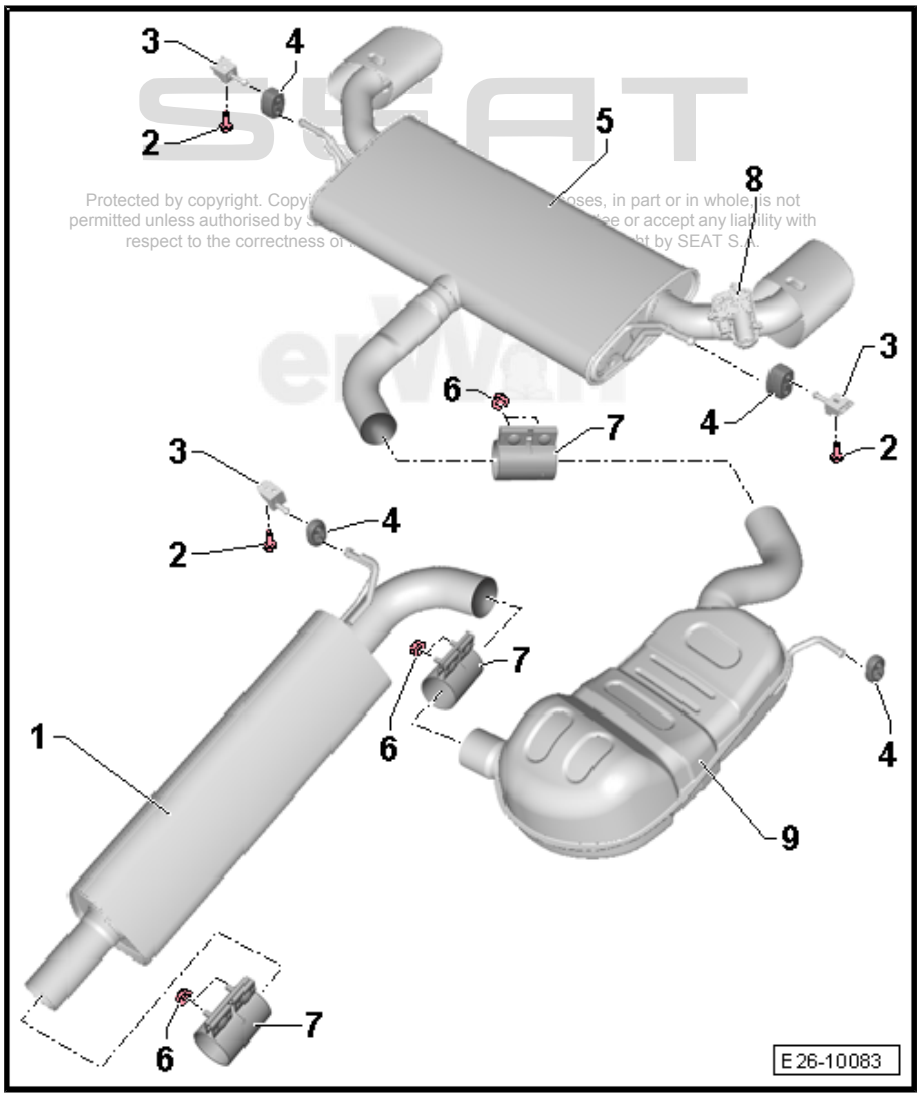

1 - Front silencer

- ❑ Combined in one unit with rear silencer as original equipment. Can be renewed individually for repair purposes.
- ❑ Removing and fitting ⇒ page 407
- ❑ Separating point ⇒ page 408
- ❑ Stress-free alignment of exhaust system ⇒ page 411

2 - Bolt

- ❑ 20 Nm

3 - Support plate

4 - Retaining rings

- ❑ Renew if damaged.

5 - Rear silencer

- ❑ In the original factory equipment, this is a single piece with the centre silencer. Can be renewed individually for repair purposes.
- ❑ Removing and fitting ⇒ page 402
- ❑ With exhaust flap control unit - J883-
- ❑ Separating point ⇒ page 408
- ❑ Stress-free alignment of exhaust system ⇒ page 411

6 - Nut

- ❑ 30 Nm

7 - Clamps (rear)

- ❑ Before tightening, align exhaust system so it is free of stress ⇒ page 411
- ❑ Installation position ⇒ page 397 .
- ❑ Tighten bolted connections evenly

8 - Exhaust flap control unit - J883-

- ❑ Tightening torque ⇒ page 397

9 - Middle silencer

- ❑ Combined in one unit with rear silencer as original equipment. Can be renewed individually for repair purposes.
- ❑ Removing and fitting ⇒ page 404
- ❑ Separating point ⇒ page 408
- ❑ Stress-free alignment of exhaust system ⇒ page 411

Installation position of rear clamp

– Fit clamp in position shown.

- Bolt connections face to left
- Bolt -arrow- must not protrude beyond lower edge of clamp.

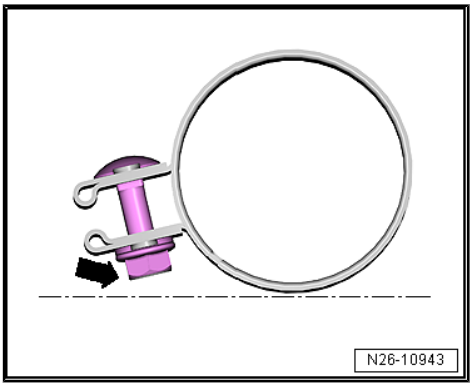

Exhaust flap control unit - J883- - tightening torque

Note

Renew nuts.

– Tighten bolts -4- to 3 Nm.

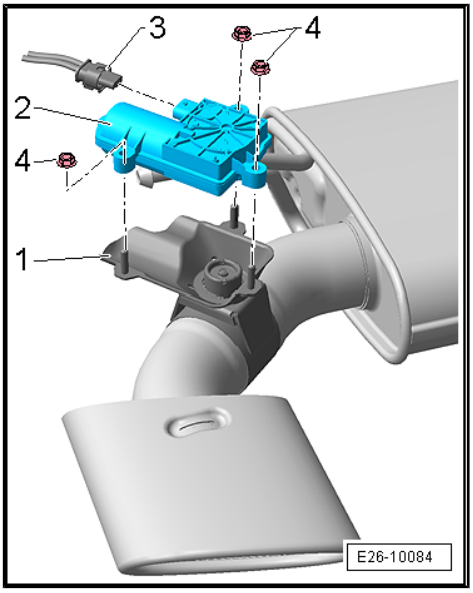

1.1.6 Assembly overview - silencer, engine codes CJXA, CJXE, CJXH, Leon ST

Original equipment as single assembly together with rear silencer; to be renewed individually in event of repair

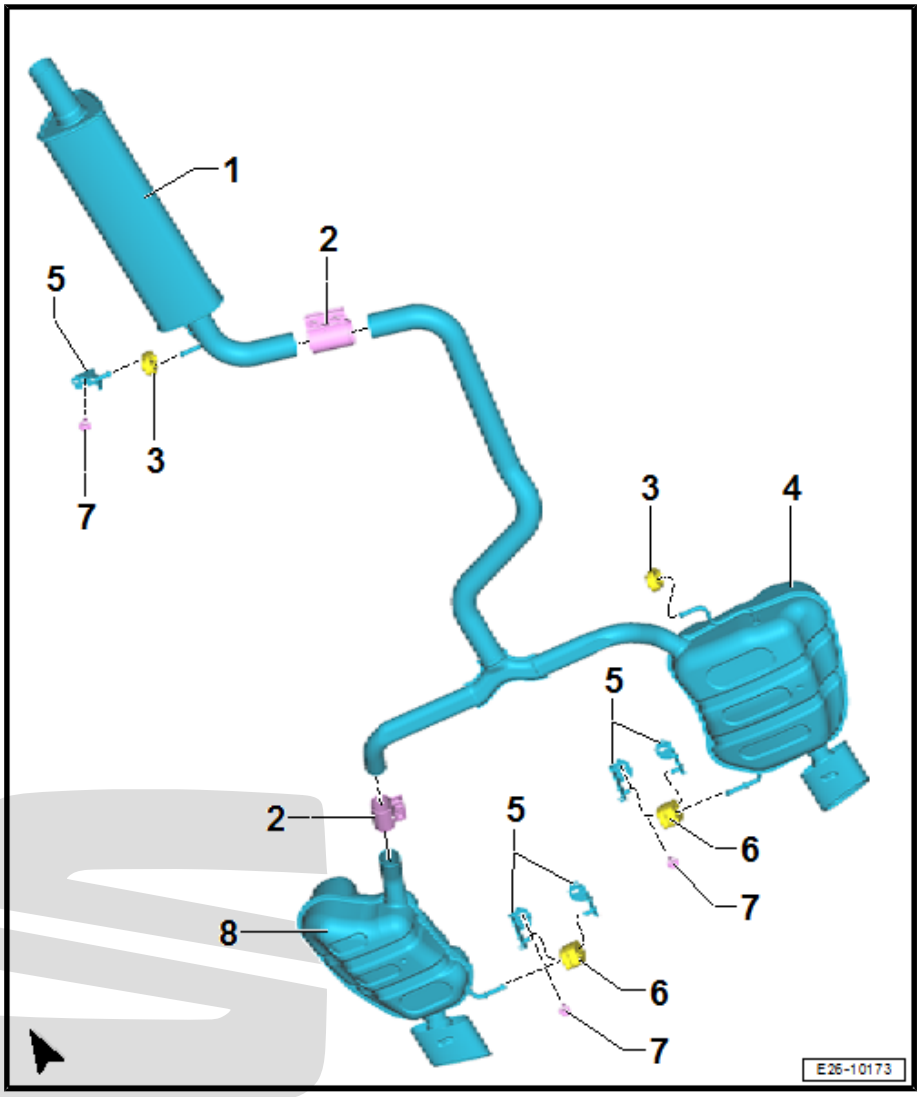

1 - Middle silencer

- ❑ Disconnecting exhaust pipes/silencers ⇒ page 408
- ❑ Stress-free alignment of exhaust system ⇒ page 411

2 - Tension sleeve

- ❑ Installation position ⇒ page 397 .
- ❑ Stress-free alignment of exhaust system ⇒ page 411
- ❑ Tighten bolted connections evenly
- ❑ 30 Nm

3 - Retaining rings

- ❑ Renew if damaged

4 - Rear right silencer

- ❑ Disconnecting exhaust pipes/silencers ⇒ page 408
- ❑ Stress-free alignment of exhaust system ⇒ page 411

5 - Support plate

6 - Retaining rings

- ❑ Renew if damaged.

7 - Bolt

- ❑ 20 Nm

8 - Rear silencer (left-side)

- ❑ Original equipment as single assembly together with rear silencer; to be renewed individually in event of repair
- ❑ Disconnecting exhaust pipes/silencers ⇒ page 408
- ❑ Stress-free alignment of exhaust system ⇒ page 411

1.1.7 Assembly overview - silencers, engine codes CJXC, CJXH, CJXG, Leon SC, 5-door, Cupra R

Original equipment as single assembly together with rear silencer; to be renewed individually in event of repair

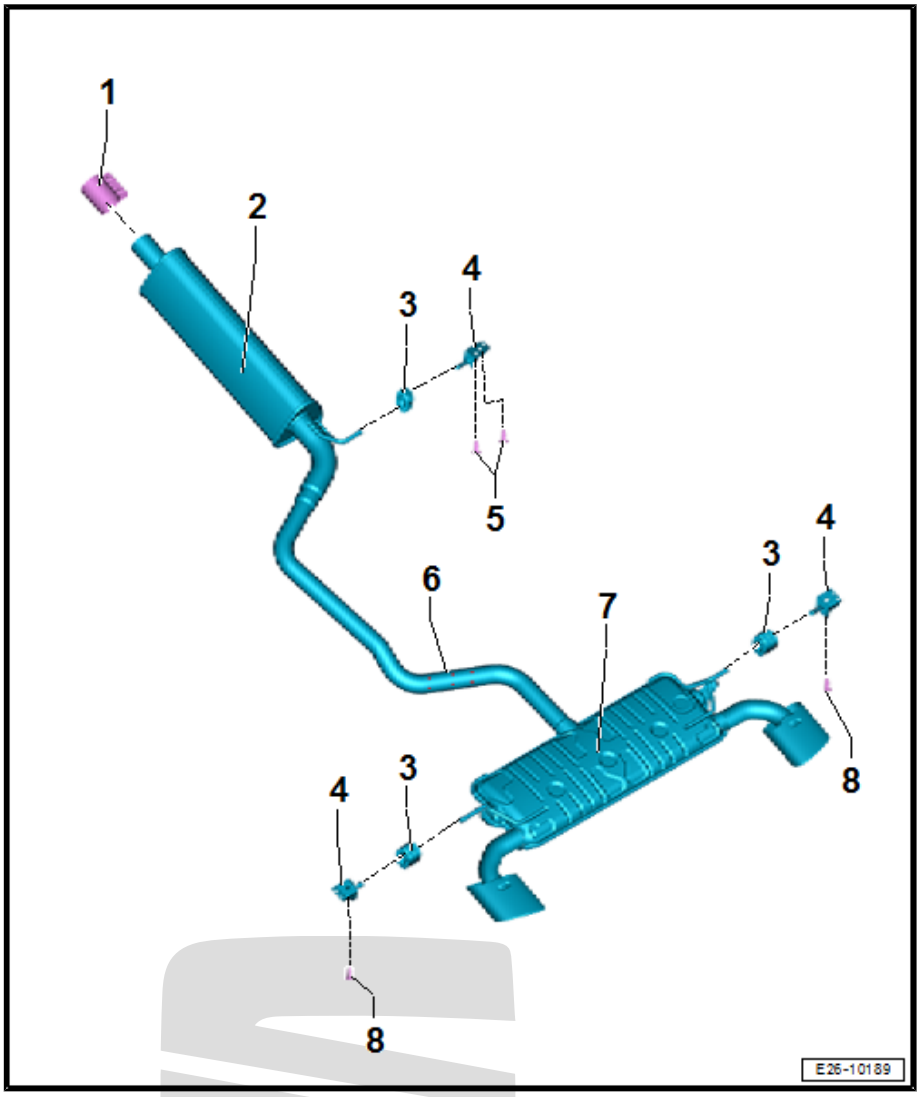

1 - Tension sleeve

- ❑ Installation position ⇒ page 397 .
- ❑ Stress-free alignment of exhaust system ⇒ page 411
- ❑ Tighten bolted connections evenly
- ❑ 30 Nm

2 - Middle silencer

- ❑ Disconnecting exhaust pipes/silencers ⇒ page 408
- ❑ Stress-free alignment of exhaust system ⇒ page 411

3 - Retaining rings

- ❑ Renew if damaged.

4 - Support plate

5 - Bolt

- ❑ 20 Nm

6 - Separating point

- ❑ Disconnecting exhaust pipes/silencers ⇒ page 408

7 - Rear silencer

- ❑ In the original factory equipment, this is a single piece with the centre silencer. Can be renewed individually for repair purposes.
- ❑ Removing and fitting ⇒ page 402
- ❑ Stress-free alignment of exhaust system ⇒ page 411
- ❑ Disconnecting exhaust pipes/silencers ⇒ page 408

8 - Bolt

- ❑ 20 Nm

1.1.8 Assembly overview - silencers, Ateca Cupra

1 - Nuts
- ❑ Qty. 2
- ❑ 30 Nm

2 - Clamping sleeve
- ❑ Evenly tighten nuts
- ❑ Fitting position ⇒ page 401
- ❑ Aligning exhaust system free of tension ⇒ page 411 .

3 - Mounting
- ❑ Renew if damaged

4 - Nuts
- ❑ Qty. 3
- ❑ Specified torque ⇒ page 400

5 - Exhaust flap control unit 2 - J945-
- ❑ Removing or installing ⇒ page 443

6 - Bracket

7 - Bolts
- ❑ 20 Nm

8 - Rear silencer
- ❑ Removing or installing ⇒ page 401
- ❑ Aligning exhaust system free of tension ⇒ page 411 .

9 - Exhaust flap control unit - J883-
- ❑ Removing or installing ⇒ page 443

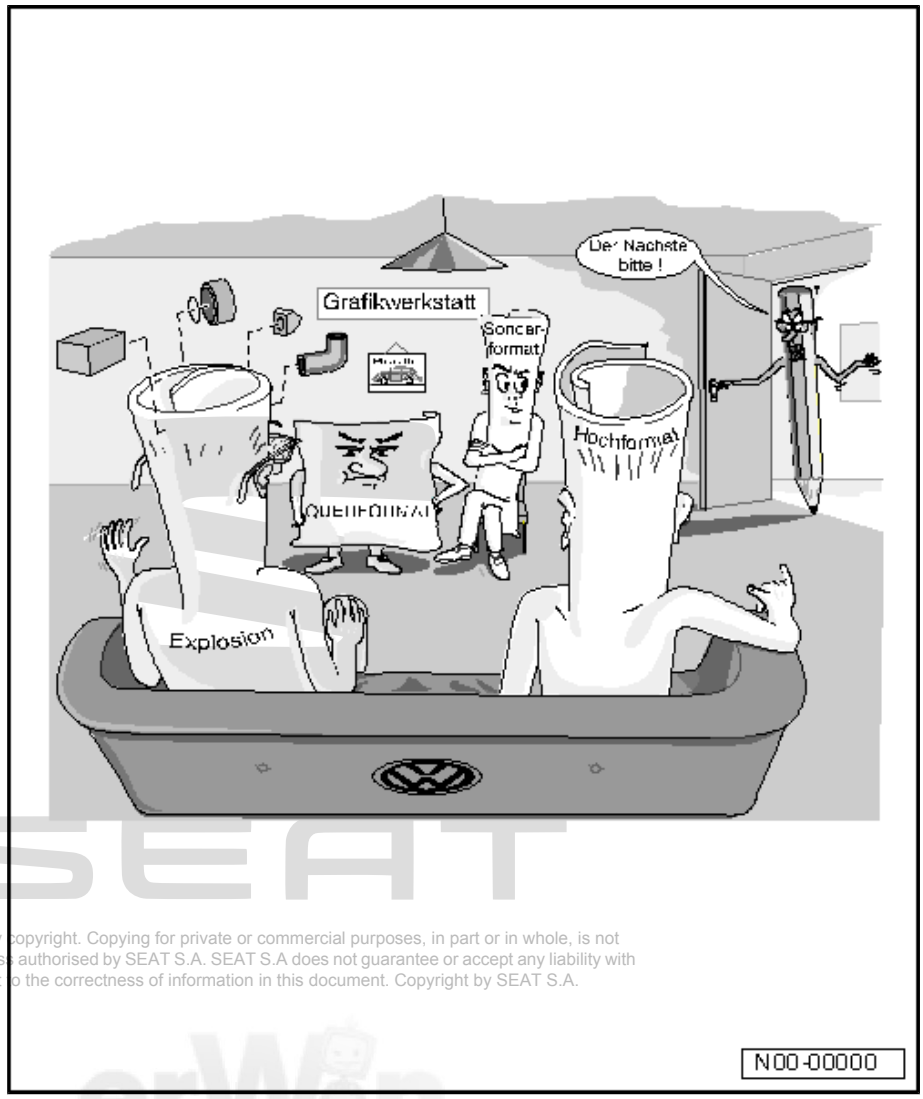

Exhaust flap control unit – specified torque

Component	Tightening torque
Nuts -3-	3 Nm

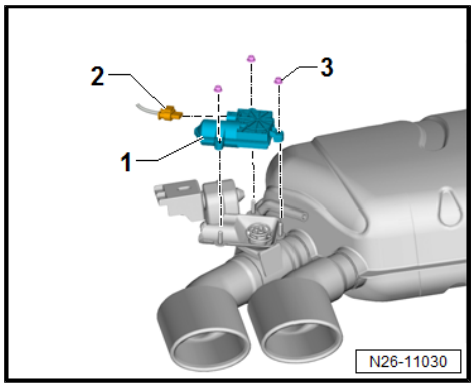

Note

Renew nuts.

Installation position of clamp

– Fit clamp in position shown. Bolt -arrow- must not protrude beyond lower edge of clamp.

- Angle -α- = about 50°+20º.
- Nuts upwards.

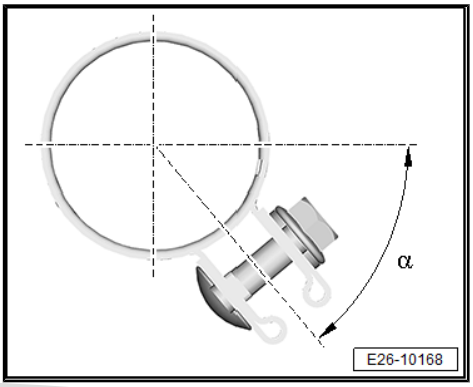

1.2 Removing and installing rear silencer

⇒ "1.2.1 Removing and installing rear silencer, engine codes CJSA, CJSB, Leon 2013", page 401

⇒ "1.2.2 Removing and installing rear silencer, engine codes CJSA, CJSB ", page 402

⇒ "1.2.3 Removing and installing rear silencer, engine codes CJXA , CJXA, CJXE, CJXH, CJXC, CJXG", page 402

⇒ "1.2.4 Remove and install silencer, Leon ST, Cupra ST Carbon Fiber Klt", page 403

⇒ "1.2.5 Removing and installing rear silencer, Ateca Cupra", page 404

1.2.1 Removing and installing rear silencer, engine codes CJSA, CJSB, Leon 2013

Note

- *In original factory equipment, this is a single piece with the rear silencer. Can be renewed individually for repair purposes.*
- *The connecting pipe -A- can be cut through at the separating points in order to renew the rear silencers separately* *⇒ page 408* .

Removing

– Loosen clamp -arrow- and push towards rear.

CAUTION

Risk of accident caused by high weight of silencers.

– Seek help from a second a mechanic for the following work.

– Unscrew bolts -1- from the body. Remove silencer -2-.

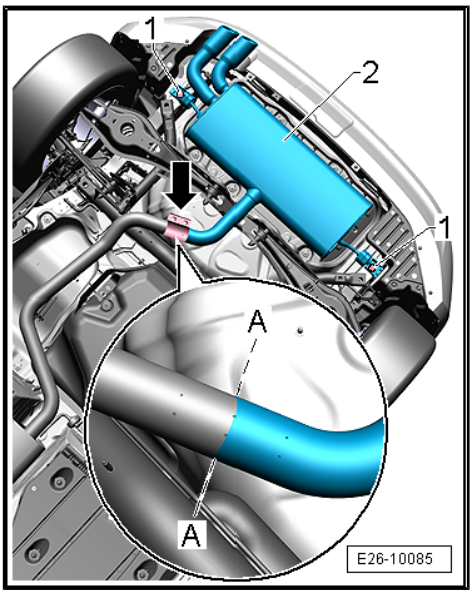

Fitting

Install in the reverse order of removal, observing the following:

– Align exhaust system without tension ⇒ page 411 .

Specified torques

- ⇒ "1.1.1 Assembly overview - silencers, engine codes CJSA , CJSB, Leon SC", page 391

1.2.2 Removing and installing rear silencer, engine codes CJSA, CJSB

Note

- *In original factory equipment, this is a single piece with the rear silencer. Can be renewed individually for repair purposes.*
- *The connecting pipe -A- can be cut through at the separating points in order to renew the rear silencers separately* *⇒ page 408* .

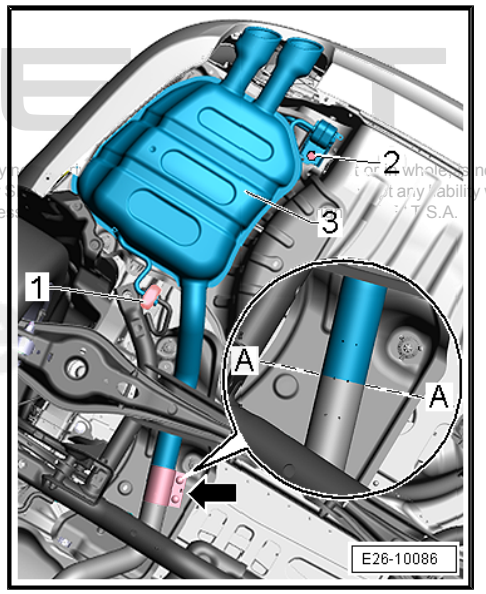

Removing

– Detach mounting -1- from the silencer.

– Loosen clamp -arrow- and push towards rear.

CAUTION

Risk of accident caused by high weight of silencers.

– Seek help from a second a mechanic for the following work.

– Unscrew bolt -2- from the body. Remove silencer -3-.

Fitting

Install in the reverse order of removal, observing the following:

– Align exhaust system free of stress ⇒ page 411 .

Specified torques

- ⇒ “1.1.2 Assembly overview - silencers, engine codes CJSA , CJSB, Leon SC, 5-door”, page 393

1.2.3 Removing and installing rear silencer, engine codes CJXA , CJXA, CJXE, CJXH, CJXC, CJXG

Note

- *In original factory equipment, this is a single piece with the rear silencer. Can be renewed individually for repair purposes.*
- *The connecting pipe -A- can be cut through at the separating points in order to renew the rear silencers separately* *⇒ page 408* .
- *For engine codes CJXH, CJXC and CJXG no middle silencer is fitted.*

Removing

– Disconnect the electrical connector -1- from exhaust flap control unit. - J883-

– Loosen clamp -arrow- and push towards rear.

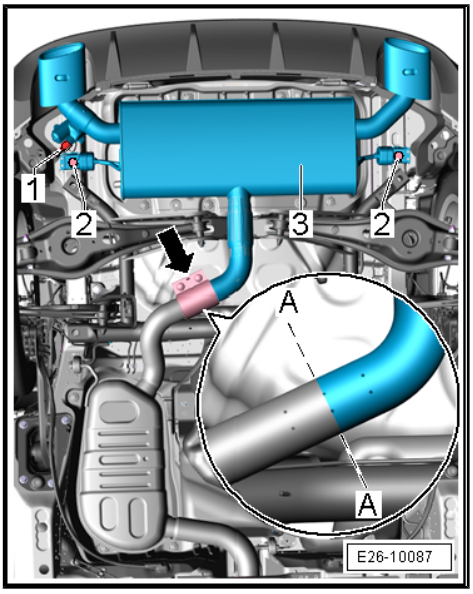

CAUTION

Risk of accident caused by high weight of silencers.

– Seek help from a second a mechanic for the following work.

– Unscrew bolts -2- from the body. Remove silencer -3-.

Fitting

Install in the reverse order of removal, observing the following:

– Align exhaust system free of stress ⇒ page 411 .

Specified torques

- ⇒ “1.1.5 Assembly overview - silencers, engine codes CJXA, CJXE, CJXH, Leon SC, 5-door”, page 396
- ⇒ Fig. ““ Exhaust flap control unit -J883- - tightening torque”“ , page 397

1.2.4 Remove and install silencer, Leon ST, Cupra ST Carbon Fiber Kit

Note

- *In the original factory equipment, this is a single piece with the centre silencer. Can be renewed individually for repair purposes.*
- *The connecting pipe -A- can be cut through at the separating points in order to renew the rear silencers separately* *⇒ page 408* .

Removing

– Loosen clamping sleeve -4-.

– Unscrew bolt -5- from the body.

– Detach mounting -2- from the silencer.

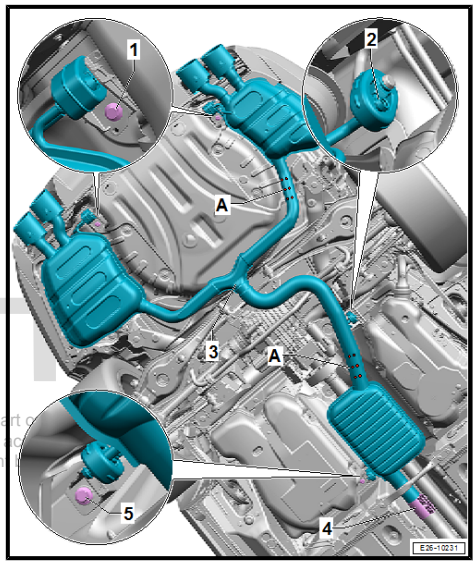

CAUTION

Risk of accident caused by high weight of silencers.

– Seek help from a second a mechanic for the following work.

– Unscrew bolts -1- from the body. Remove silencer -3-.

Installing

Install in the reverse order of removal, observing the following:

– Align exhaust system free of stress ⇒ page 411 .

Specified torques

- ⇒ “1.1.4 Assembly overview - silencer, Cupra ST Carbon Fiber Kit”, page 395

1.2.5 Removing and installing rear silencer, Ateca Cupra

Special tools and workshop equipment required

- Engine and gearbox jack - VAS 6931-

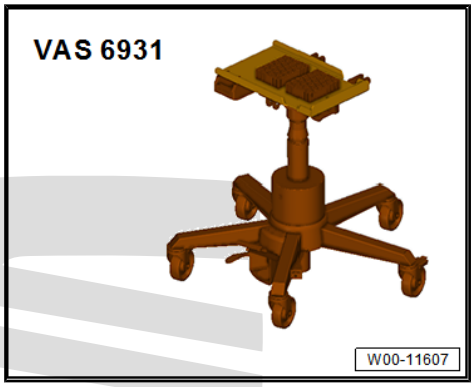

Removing

- Loosen clamp -arrow- and push towards rear.
- Unplug electrical connectors at control units -3- of exhaust flaps ⇒ page 400 .
- Disengage rear silencer -2- from the hanger -4-.
- Position engine and gearbox jack under silencer and prop it up.
- Unscrew bolts -1-.
- Remove rear silencer -2-.

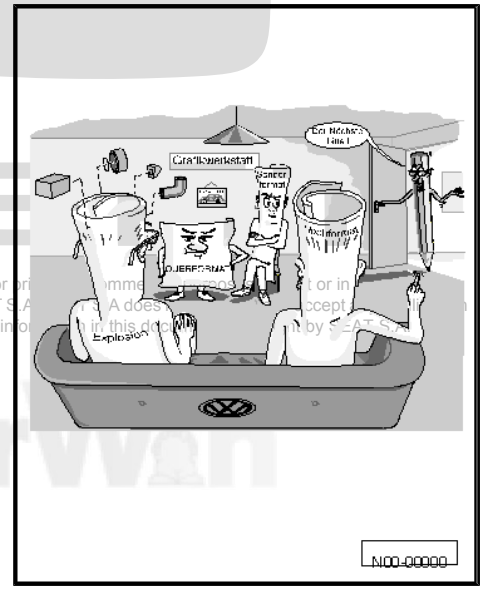

Installation

Install in the reverse order of removal, observing the following:

- Align exhaust system without tension ⇒ page 411 .

Specified torques

- ⇒ “1.1 Exploded view - silencers”, page 391

1.3 Removing and installing centre silencer

Note

- *In the original factory equipment, this is a single piece with the centre silencer. Can be renewed individually for repair purposes.*
- *The connecting pipe -A- can be cut through at the separating points in order to renew the rear silencers separately* *⇒ page 408* .

Removing

– Unfasten clamps -arrows-.

– Detach mounting -1- from the silencer.

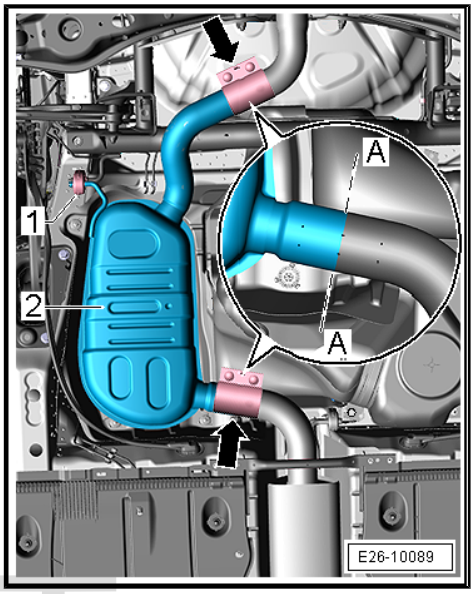

CAUTION

Risk of accident caused by high weight of silencers.

– Seek help from a second a mechanic for the following work.

– Remove silencer -2-.

Fitting

Install in the reverse order of removal, observing the following:

– Align exhaust system without tension ⇒ page 411 .

Specified torques

♦ ⇒ “1.1.5 Assembly overview - silencers, engine codes CJXA, CJXE, CJXH, Leon SC, 5-door”, page 396

1.4 Removing and installing front silencer

⇒ “1.4.1 Removing and installing rear front silencer, engine codes CJSA, CJSB, CJXC, CJXH, CJXG”, page 405

⇒ “1.4.2 Removing and installing front silencer, engine codes CJSA, CJSB”, page 406

⇒ “1.4.3 Removing and installing front silencer, engine codes CJXA, CJXE”, page 407

1.4.1 Removing and installing rear front silencer, engine codes CJSA, CJSB, CJXC, CJXH, CJXG

Note

♦ *In the original factory equipment, this is a single piece with the centre silencer. Can be renewed individually for repair purposes.*

♦ *The connecting pipe -A- can be cut through at the separating points in order to renew the rear silencers separately* *⇒ page 408* *.*

Removing

– Remove the rear tunnel bridge -2-.

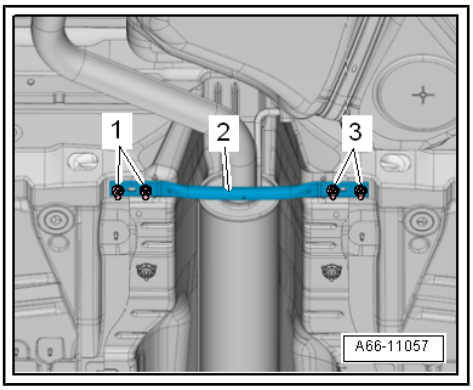

– Unscrew bolt -1- from the body.
– Unfasten clamps -arrows-.
– Remove silencer -2-.

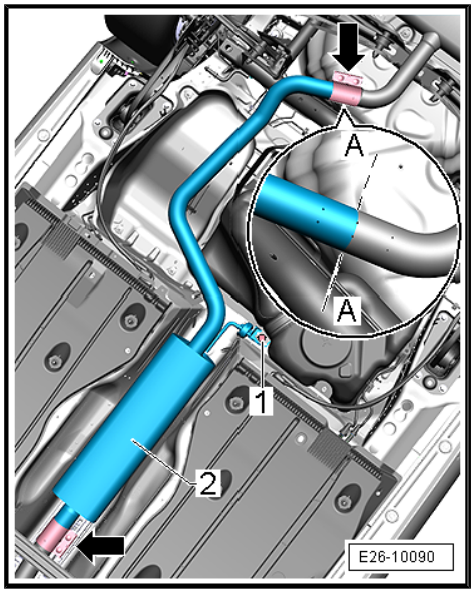

Fitting

Install in the reverse order of removal, observing the following:

– Align exhaust system free of stress ⇒ page 411 .

Specified torques

♦ ⇒ “1.1.1 Assembly overview - silencers, engine codes CJSA , CJSB, Leon SC”, page 391

1.4.2 Removing and installing front silencer, engine codes CJSA, CJSB

Note

♦ *In the original factory equipment, this is a single piece with the centre silencer. Can be renewed individually for repair purposes.*

♦ *The connecting pipe -A- can be cut through at the separating points in order to renew the rear silencers separately* *⇒ page 408* .

Removing

– Remove the rear tunnel bridge -2-.

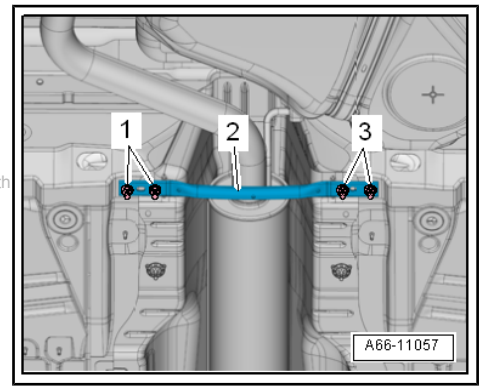

– Unscrew bolt -1- from the body.
– Unfasten clamps -arrows-.
– Remove silencer -2-.

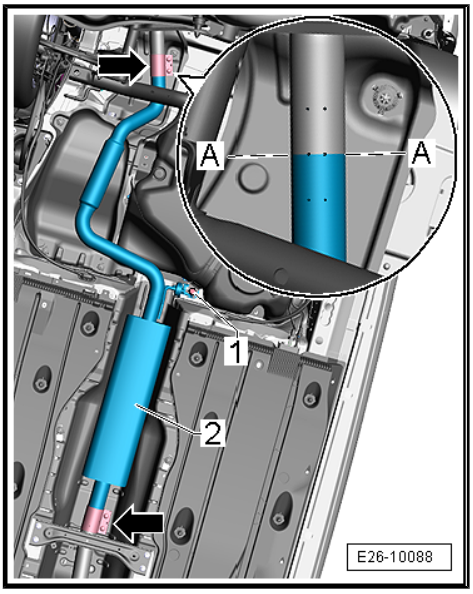

Fitting

Install in the reverse order of removal, observing the following:

– Align exhaust system free of stress ⇒ page 411 .

Specified torques

♦ ⇒ “1.1.2 Assembly overview - silencers, engine codes CJSA , CJSB, Leon SC, 5-door”, page 393

1.4.3 Removing and installing front silencer, engine codes CJXA, CJXE

Note

♦ *In the original factory equipment, this is a single piece with the centre silencer. Can be renewed individually for repair purposes.*

♦ *The connecting pipe -A- can be cut through at the separating points in order to renew the rear silencers separately* *⇒ page 408* .

Removing

– Remove the rear tunnel bridge -2-.

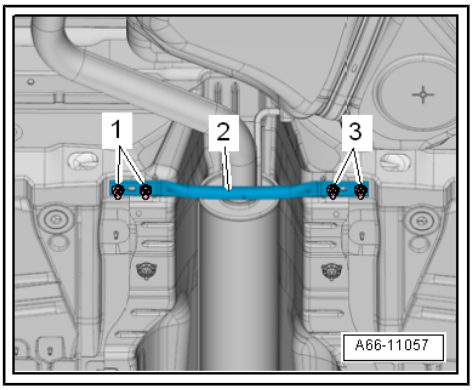

– Unscrew bolt -1- from the body.
– Unfasten clamps -arrows-.
– Remove silencer -2-.

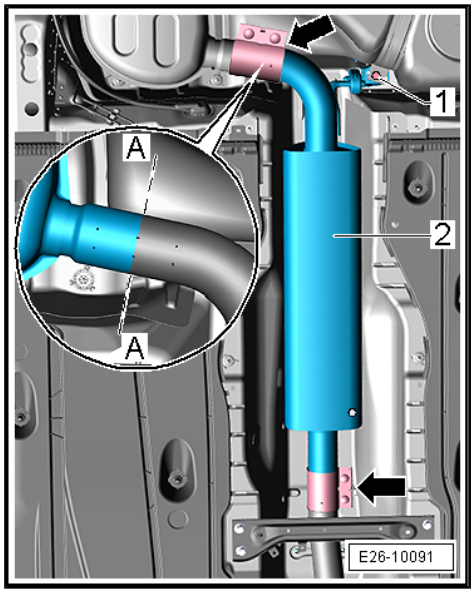

Fitting

Install in the reverse order of removal, observing the following:

– Align exhaust system without tension ⇒ page 411 .

Specified torques

♦ ⇒ “1.1.5 Assembly overview - silencers, engine codes CJXA, CJXE, CJXH, Leon SC, 5-door”, page 396

1.5 Disconnecting exhaust pipes/silencers

⇒ “1.5.1 Separating exhaust pipes/silencers, front-wheel drive”, page 408

⇒ “1.5.2 Disconnect exhaust gas pipe/silencer, Cupra ST Carbon Fiber Kit”, page 410

1.5.1 Separating exhaust pipes/silencers, front-wheel drive

♦ The connecting pipe can be cut through at the cutting point in order to renew the centre and rear silencers separately.

♦ The separating point is marked with indentations on the outside of the exhaust pipe.

Special tools and workshop equipment required

♦ Chain-type pipe cutter - VAS 6254-

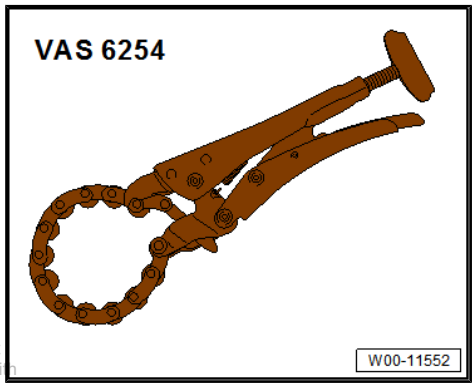

♦ Or

♦ Pneumatic sabre saw - V.A.G 1523B-

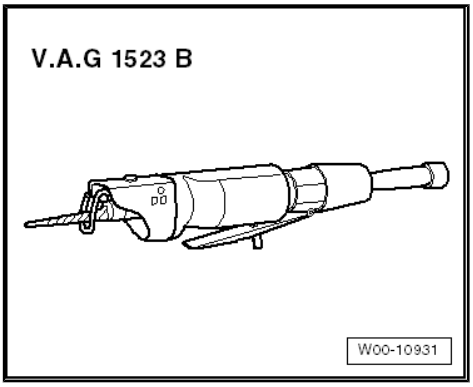

Sequence of operations

– Cut through exhaust pipe -1- at right angles at separating point -arrow- using chain pipe cutter - VAS 6254- or pneumatic sabre saw - V.A.G 1523B- .

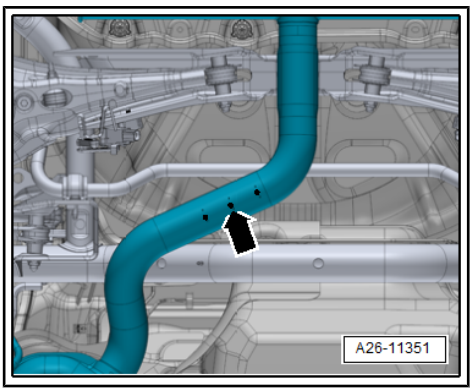

– Position clamp -arrow- centrally relative to side marks when installing.

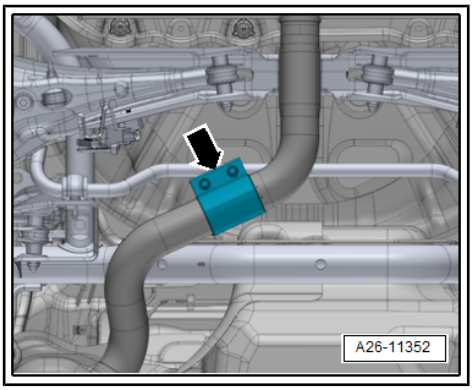

– Install the clamp so that end of bolt -arrow- does not extend beyond lower edge of clamp.

– Align exhaust system without tension ⇒ page 411 .

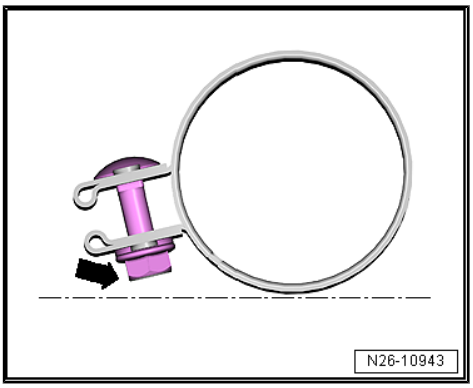

1.5.2 Disconnect exhaust gas pipe/silencer, Cupra ST Carbon Fiber Kit

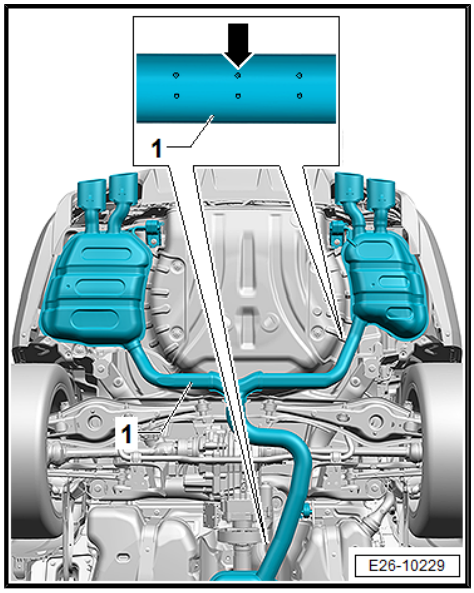

- The connecting pipe -1- can be cut through at the separating points in order to renew the rear silencers separately.
- For individual renewal of the centre silencer, a cutting point is provided in the connecting pipe.
- The separating point -arrow- is marked with indentations on the outside of the exhaust pipe.
- A second mechanic is required for the procedure.

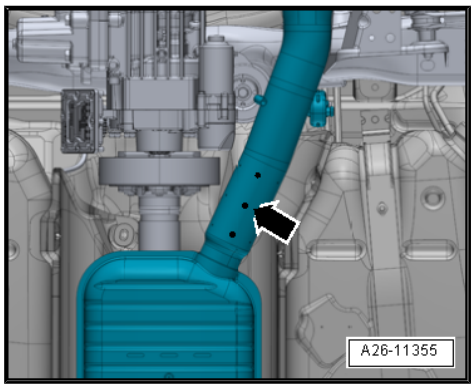

Separating right rear silencer

– Unscrew bolt -2- for rear right silencer -1-.

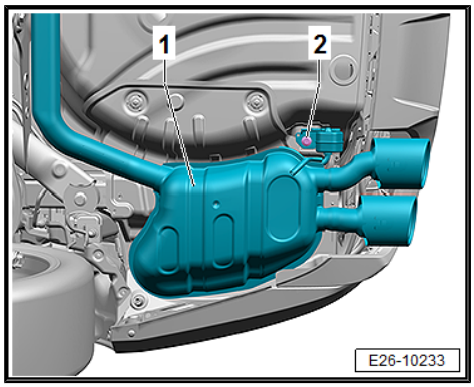

– Cut through exhaust pipe -1- at right angles at separating point -arrow- using chain pipe cutter - VAS 6254- or pneumatic sabre saw - V.A.G 1523B- .

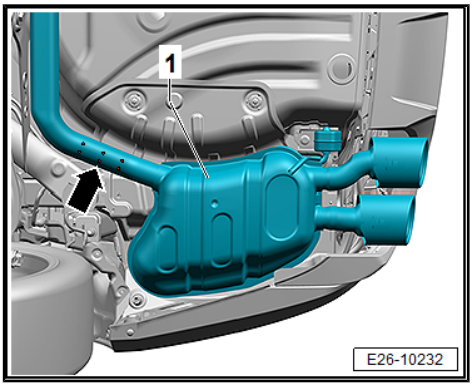

Installing rear silencer

– Position clamp -1- centrally at side marks -arrows- when installing.

– Turn clamp in such a way that there is sufficient clearance to adjacent components.

– Align exhaust system free of stress ⇒ page 411 .

– Tighten threaded connections evenly.

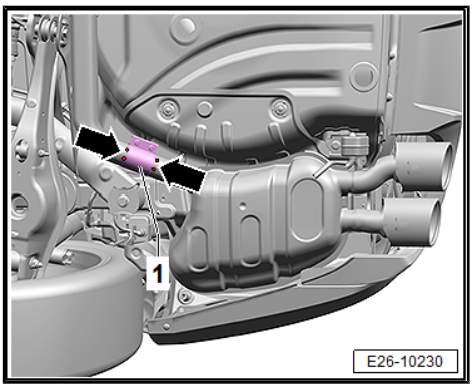

Separating and joining centre silencer

– Cut through exhaust pipe of centre silencer at right angles at separating point -arrow- using chain pipe cutter - VAS 6254- or body saw - V.A.G 1523B- .

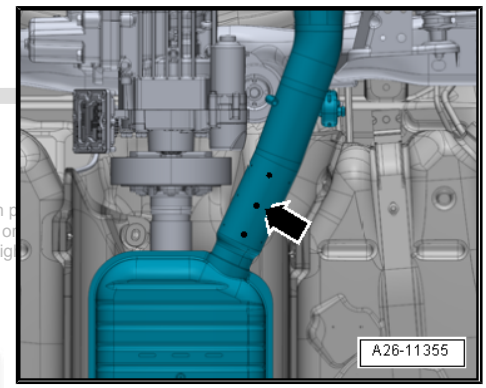

– Position clamp -arrow- centrally relative to side marks when installing.

– Turn clamp in such a way that there is sufficient clearance to adjacent components.

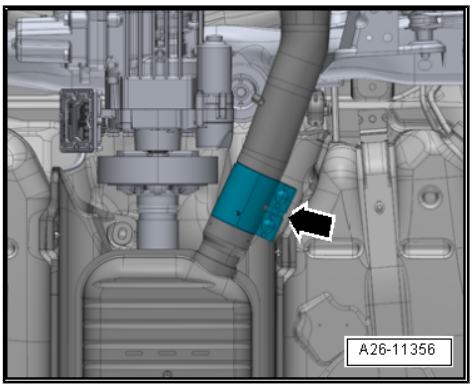

Specified torques

♦ ⇒ “1.1.4 Assembly overview - silencer, Cupra ST Carbon Fiber Kit”, page 395

1.6 Align exhaust system to be free of stress

Operation process

- The exhaust system must be aligned when it is cool.
- Specified torques
  ⇒ “1.1 Exploded view - silencers”, page 391 .

– Loosen bolt connections -arrow- on clamp.

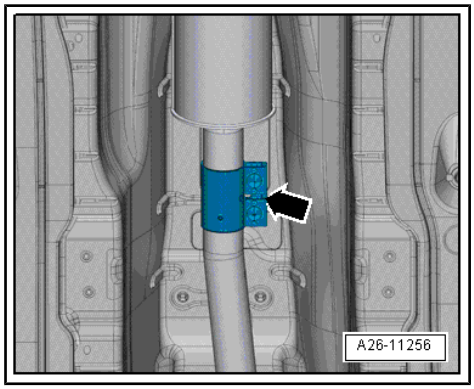

– Push exhaust system towards front of vehicle until preloading at mounting for exhaust pipe -a- = 5 mm.

– Install front clamp ⇒ page 415 .

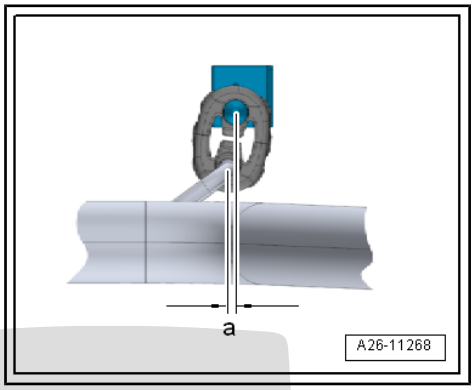

1.7 Aligning tailpipes

Vehicles with 1.8 ltr. engine:

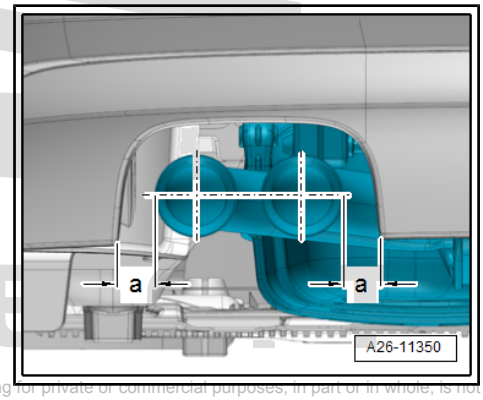

Vehicles with 2.0 ltr. engine:

– Adjust the rear silencer so that an even gap is formed between bumper cut-out and exhaust pipes.

• -a- = -a-

– Unfasten rear silencer mounting to align tailpipes.

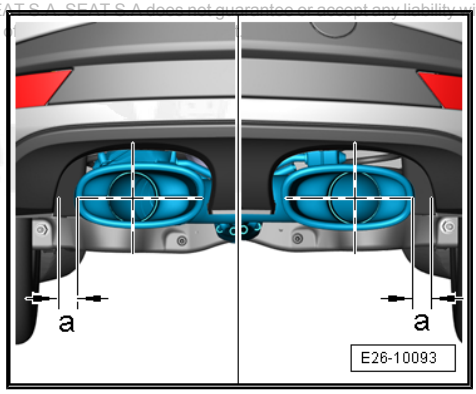

1.8 Check exhaust system for leaks

– Start engine and allow to run at idling speed.

– Plug tailpipes during leak test (e.g. with cloth or plugs).

– Listen for noise at the connection points of cylinder head/exhaust manifold, turbocharger/front exhaust pipe etc. to locate any leaks.
– Rectify any leaks that are found.

2 Emission control

2.1 Assembly overview - emission control

2.1.1 Assembly overview - emission control, vehicles without particulate filter

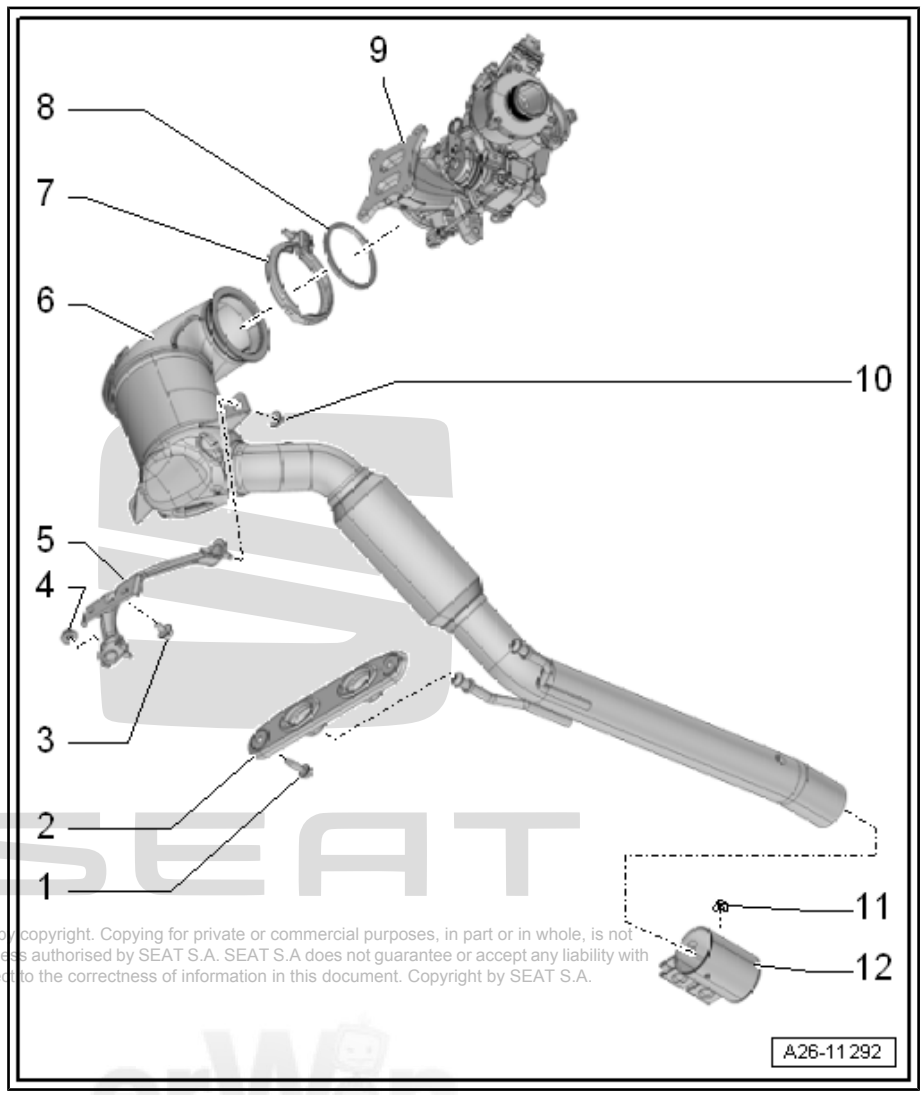

1 - Bolt

- ❑ 20 Nm

2 - Support plate

- ❑ Renew if damaged.

3 - Bolt

Tightening torque and sequence ⇒ page 415

4 - Nut

Tightening torque and sequence ⇒ page 415

5 - Support plate

- ❑ For catalytic converter

6 - Oxidising catalytic converter

- ❑ With primary exhaust pipe
- ❑ Protect catalytic converter from damage by knocks and impact
- ❑ Removing and fitting ⇒ page 420
- ❑ Stress-free alignment of exhaust system ⇒ page 411

7 - Screw-type clamp

- ❑ Renew after removal
- ❑ Installation position ⇒ page 415 .
- ❑ Tightening torque and sequence ⇒ page 415

8 - Gasket

- ❑ Renew after removing

9 - Turbocharger

- ❑ Removing and fitting ⇒ page 307

10 - Nut

Tightening torque and sequence ⇒ page 415

11 - Nut

- ❑ 30 Nm

12 - Front clamp

- ❑ Before tightening, align exhaust system so it is free of stress ⇒ page 411
- ❑ Installation position ⇒ page 415 .
- ❑ Tighten bolted connections evenly

Installation position of front clamp

– Fit clamp in position shown. Bolt -arrow- must not protrude beyond lower edge of clamp.

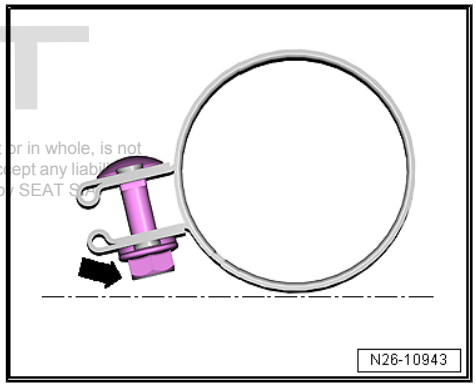

Installation position of screw-type clip for catalytic converter

– Fit screw-type clip in position shown. Make sure there is sufficient clearance between bolted connection -arrow- and other components.

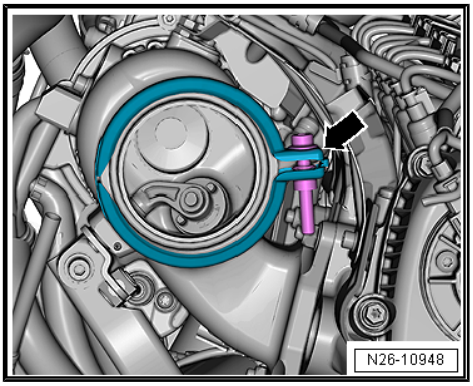

Catalytic converter - tightening torque and sequence

– Tighten bolted connections in stages in the sequence shown:

Stage	Screw-type clip/ nuts	Tightening torque
1.	-1, 3, 4-	Screw in by hand until it stops. • It should still be possible to move catalytic converter and bracket.
2.	-2-	Tighten screw-type clip to 15 Nm. Note installation position ⇒ page 415 .
3.	-1, 3, 4-	Tighten to 20 Nm

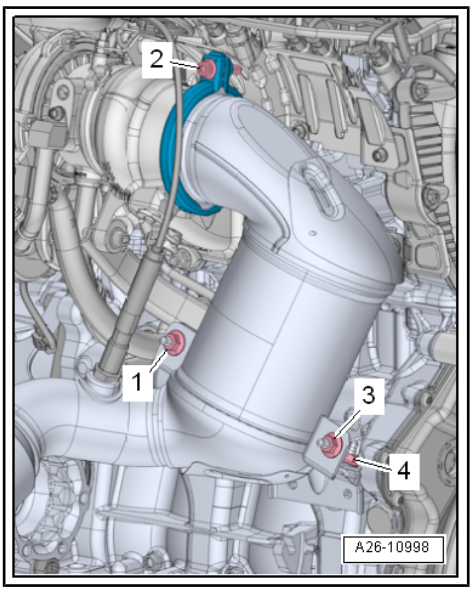

2.1.2 Assembly overview - Emission control, vehicles with particulate filter, front-wheel drive

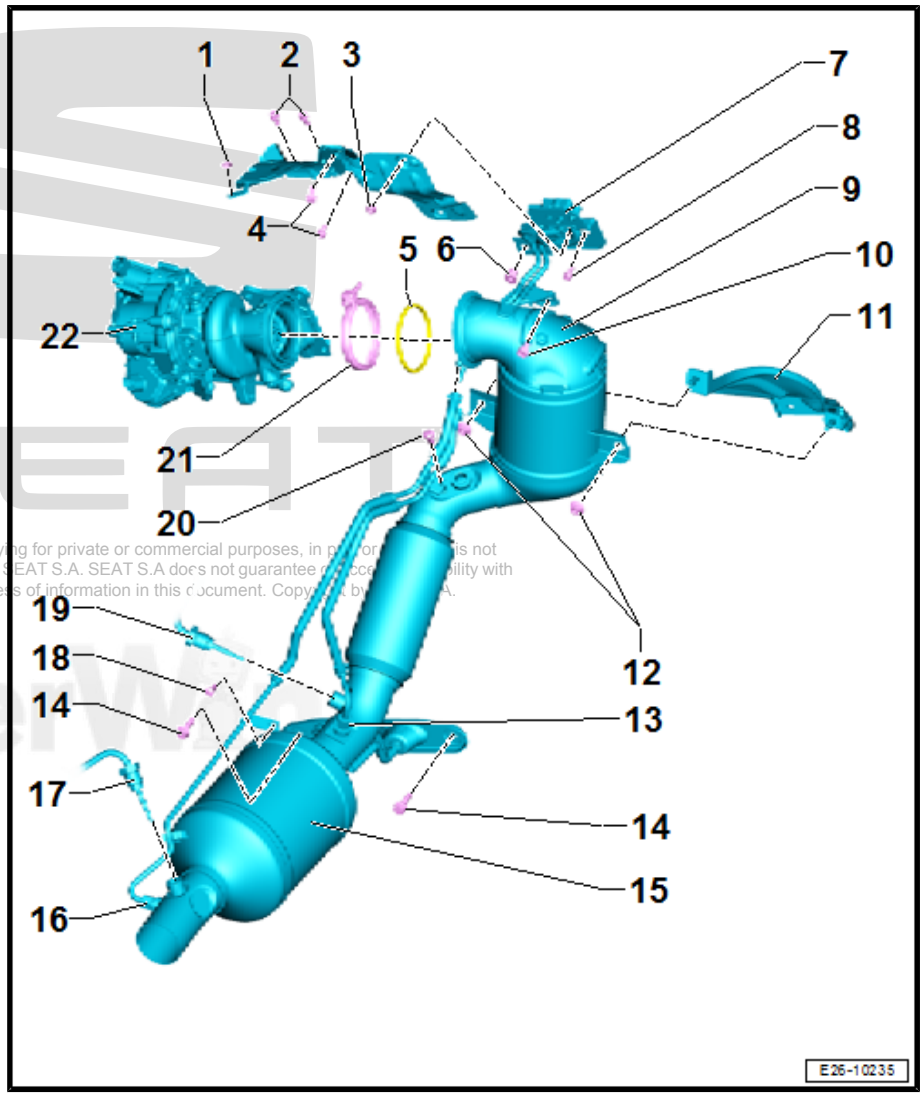

1 - Nut
- ❑ 9 Nm

2 - Bolt
- ❑ 9 Nm

3 - Nut
- ❑ 8 Nm

4 - Bolt
- ❑ 9 Nm

5 - Seal
- ❑ Renew after removing

6 - Bolt
- ❑ 20 Nm

7 - Pressure pipes
- ❑ with pressure differential sender for particulate filter - G1037-

8 - Bolt
- ❑ 9 Nm

9 - Catalytic converter
- ❑ With primary exhaust pipe
- ❑ Protect catalytic converter from damage by knocks and impact
- ❑ Removing or installing ⇒ page 427
- ❑ Aligning exhaust system free of tension ⇒ page 411 .

10 - Bolt
- ❑ 20 Nm

11 - Support plate
- ❑ for the catalytic converter

12 - Nut

Specified torques and installation sequence ⇒ page 415 .

13 - Union nut
- ❑ Apply high-temperature paste to threads
- ❑ 45 Nm

14 - Bolt
- ❑ 20 Nm

15 - Particulate filter
- ❑ With front exhaust pipe
- ❑ Protect catalytic converter from damage by knocks and impact
- ❑ Removing or installing ⇒ page 427
- ❑ Aligning exhaust system free of tension ⇒ page 411 .

16 - Union nut

- ❑ Apply high-temperature paste to threads
- ❑ 45 Nm

17 - Temperature sender before particulate filter - G527-

- ❑ Apply high-temperature paste to threads
- ❑ Removing or installing ⇒ page 448
- ❑ 45 Nm

18 - Bolt

- ❑ 9 Nm

19 - Temperature sender after particulate filter - G506-

- ❑ Apply high-temperature paste to threads
- ❑ Removing and installing ⇒ page 446
- ❑ 45 Nm

20 - Bolt

- ❑ 9 Nm

21 - Screw-type clamp

- ❑ Renew after removal
- ❑ Installation position ⇒ page 415 .
- ❑ Specified torques and installation sequence ⇒ page 415 .

22 - Turbocharged

- ❑ Removing or installing ⇒ page 309

2.1.3 Assembly overview - Emission control, vehicles with particulate filter, all-wheel drive

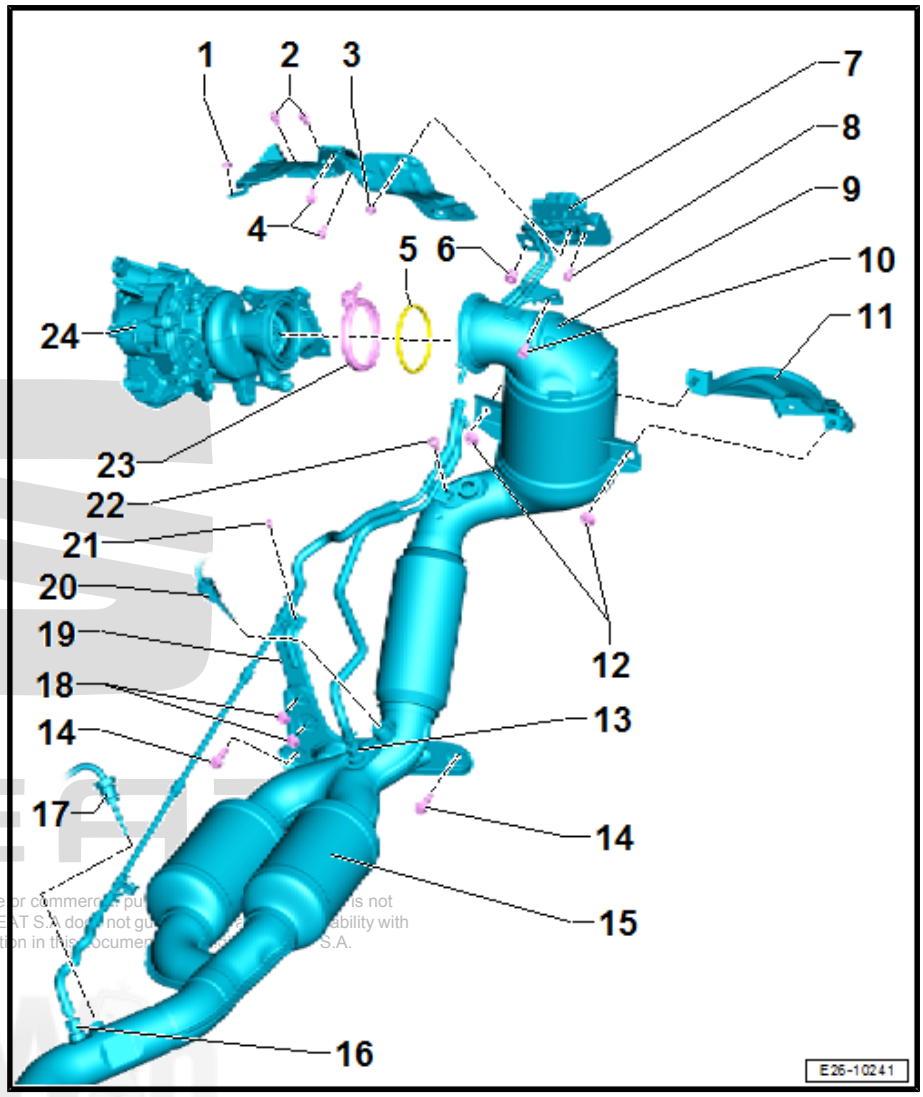

1 - Nut
- ❑ 9 Nm

2 - Bolt
- ❑ 9 Nm

3 - Nut
- ❑ 8 Nm

4 - Bolt
- ❑ 9 Nm

5 - Seal
- ❑ Renew after removing

6 - Bolt
- ❑ 20 Nm

7 - Holder for pressure differential sender for particulate filter - G1037-
- ❑ Assembly overview ⇒ page 420
- ❑ Removing or installing ⇒ page 442

8 - Bolt
- ❑ 8 Nm

9 - Catalytic converter
- ❑ With primary exhaust pipe
- ❑ Protect catalytic converter from damage by knocks and impact
- ❑ Removing and fitting ⇒ page 420
- ❑ Stress-free alignment of exhaust system ⇒ page 411

10 - Bolt
- ❑ 20 Nm

11 - Support plate
- ❑ for the catalytic converter

12 - Nut

Specified torques and installation sequence ⇒ page 415 .

13 - Union nut
- ❑ Apply high-temperature paste to threads
- ❑ 45 Nm

14 - Bolt
- ❑ 20 Nm

15 - Particulate filter
- ❑ With front exhaust pipe
- ❑ Protect catalytic converter from damage by knocks and impact

- ❑ Removing and fitting ⇒ page 420
- ❑ Stress-free alignment of exhaust system ⇒ page 411

16 - Union nut

- ❑ Apply high-temperature paste to threads
- ❑ 45 Nm

17 - Temperature sender before particulate filter - G527-

- ❑ Apply high-temperature paste to threads
- ❑ Removing or installing ⇒ page 448
- ❑ 45 Nm

18 - Nut

- ❑ 9 Nm

19 - Support plate

- ❑ For pressure line

20 - Temperature sender after particulate filter - G506-

- ❑ Apply high-temperature paste to threads
- ❑ Removing or installing ⇒ page 446
- ❑ 45 Nm

21 - Bolt

- ❑ 9 Nm

22 - Bolt

- ❑ 9 Nm

23 - Screw-type clamp

- ❑ Renew after removal
- ❑ Installation position ⇒ page 415 .
- ❑ Specified torques and installation sequence ⇒ page 415 .

24 - Turbocharged

- ❑ Removing or installing ⇒ page 309

2.1.4 Assembly overview - bracket and pipes for pressure differential sender for particulate filter - G1037-

1 - Shield

2 - Nut
- ❑ 8 Nm

3 - Elbow stud

4 - Pressure differential sender for particulate filter - G1037-
- ❑ Securing bolt, 8 Nm
- ❑ Removing or installing ⇒ page 375

5 - Bracket

6 - Bolt
- ❑ 9 Nm

7 - Shield

8 - Nut
- ❑ 8 Nm

9 - Bolt
- ❑ 9 Nm

10 - Bolt
- ❑ 9 Nm

11 - Bolt
- ❑ 9 Nm

12 - Bolt
- ❑ 20 Nm

13 - Pressure line

14 - Bolt
- ❑ 20 Nm

15 - Exhaust turbocharger

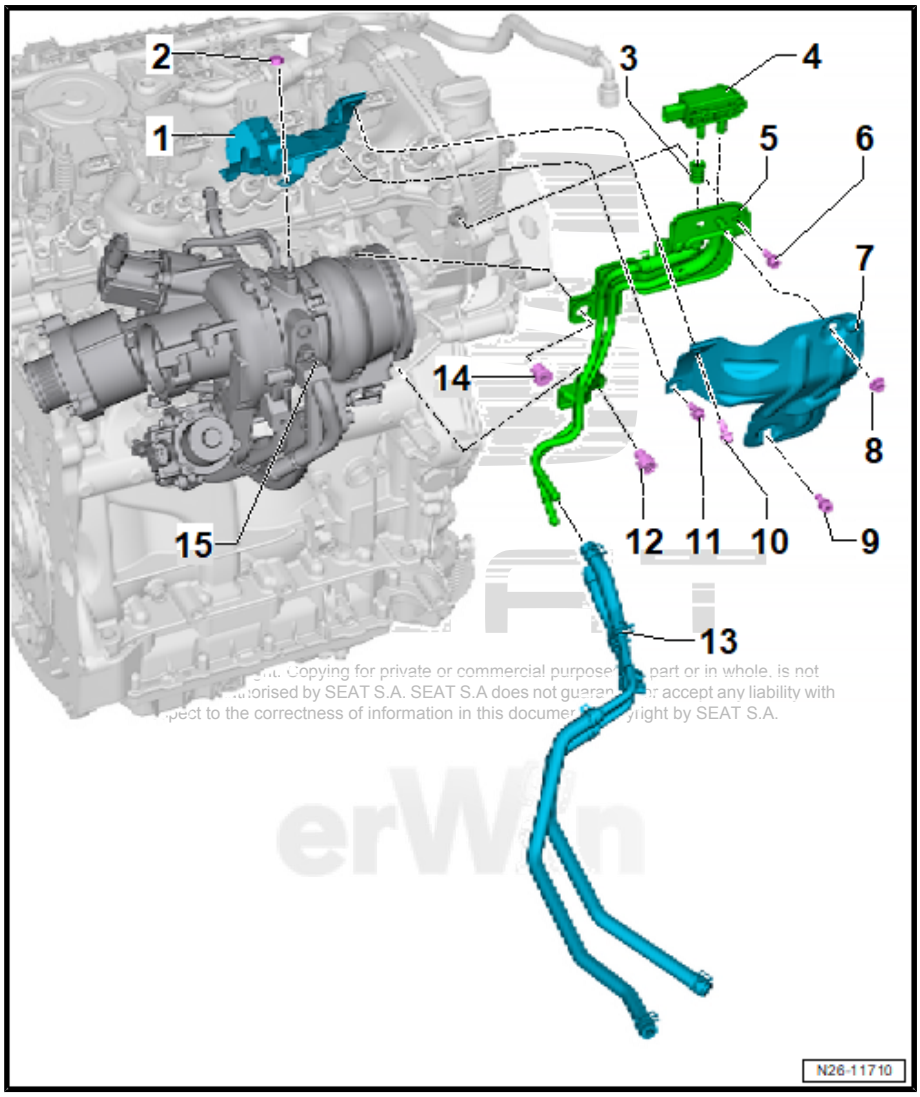

2.2 Removing and installing catalytic converter

⇒ “2.2.1 Removing and installing catalytic converter, vehicles without particulate filter”, page 420

⇒ “2.2.2 Removing and installing catalytic converter, vehicles with particulate filter and front-wheel drive”, page 427

⇒ “2.2.3 Removing and installing catalytic converter, vehicles with particulate filter and all-wheel drive”, page 433

2.2.1 Removing and installing catalytic converter, vehicles without particulate filter

Special tools and workshop equipment required

- Transport lock - T10404-

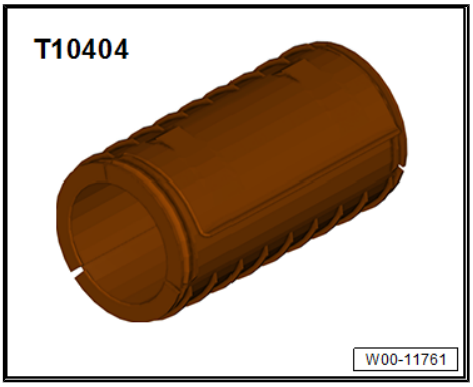

- Four-wheel drive vehicles: counterhold tool - T10172A-

- Tensioning strap - T10038-

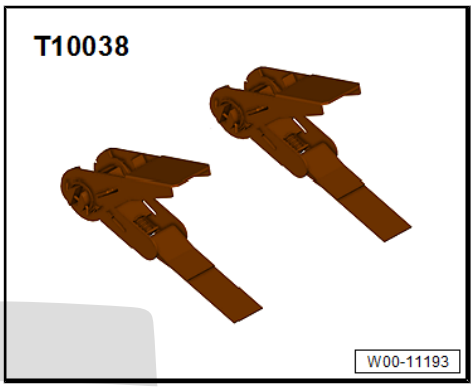

- Lambda probe open ring spanner set - 3337-

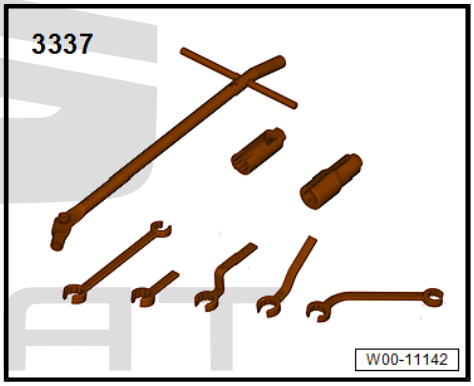

- Four-wheel drive vehicles: grommet - 3247-

- Engine support - T50015A-

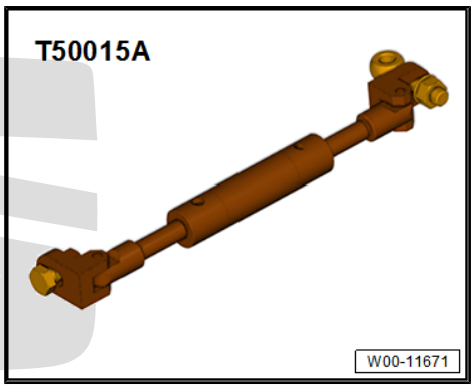

- Supports of the positioner - T10533/2-
- Bolt M12 x 20 mm of the positioner - T10533/4-
- High-temperature paste ⇒ Electronic parts catalogue (ETKA)

Removing

Note

- *The catalytic converter is removed together with the front exhaust pipe.*
- *Fit cable tie in same place when installing.*

– Disconnect connector -1- for Lambda probe 1 after catalytic converter - GX7- .

– Lay wires on plenum chamber bulkhead to one side.

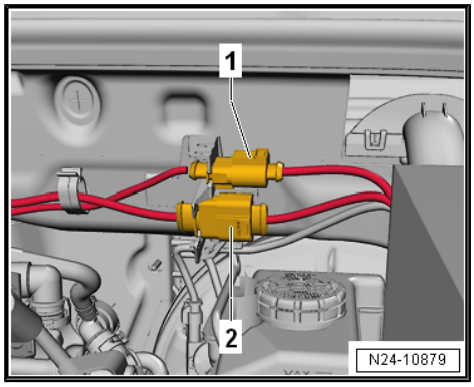

– Unscrew the Lambda probe -1- using tool from Lambda probe open ring spanner set - 3337/7- .

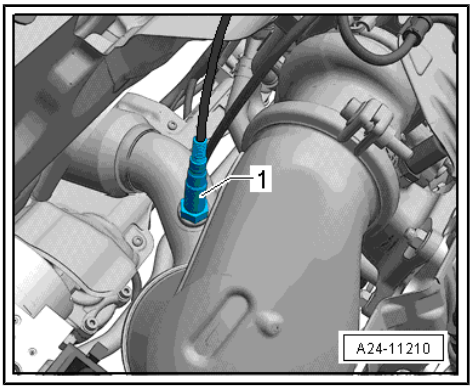

– Unscrew bolt -2- and slide clamp onto the turbocharger.

– Unscrew nuts -1 and 3-.

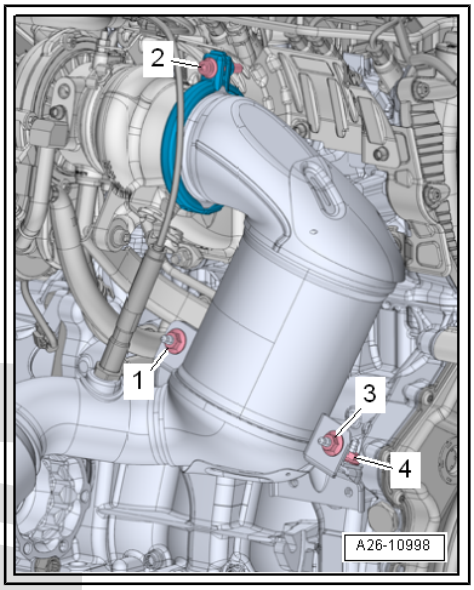

Note

- *For illustration purposes, the installation position is shown with the engine removed.*
- *Ignore -item 4-.*

– Remove noise insulation ⇒ General body repairs, exterior; Rep. gr. 66 ; Noise insulation; Assembly overview - noise insulation .

– If present, remove underbody cladding ⇒ General body repairs, exterior; Rep. gr. 66 ; underbody cladding; front underbody cladding, centre part: remove and install .

Front-wheel drive vehicles

– Remove bolts -arrows-.

– Remove heat shield from right drive shaft.

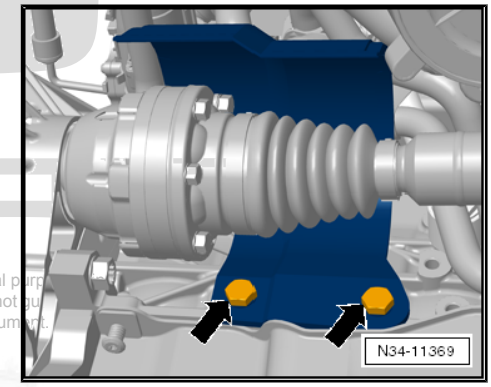

Vehicles with four-wheel drive

– Remove right-hand wheel.

– Unscrew screws -arrows- with the bit - 3247- and remove heat shield -1-.

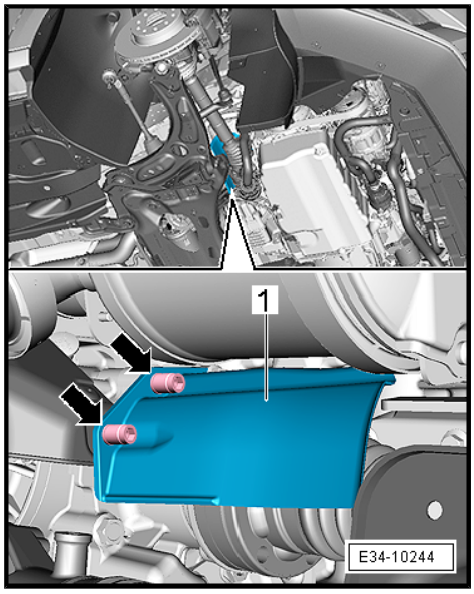

– Unscrew the bolts -arrows- and remove the heat protection plate -1-.

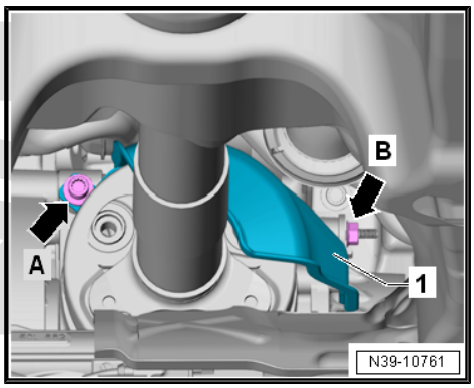

– Mark the position of the propshaft to the flange of the bevel box.

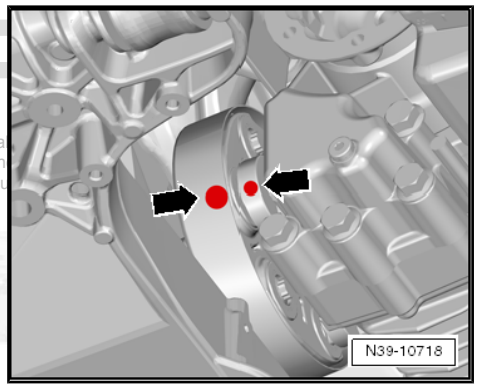

– To loosen and tighten propshaft, counterhold on rear final drive.

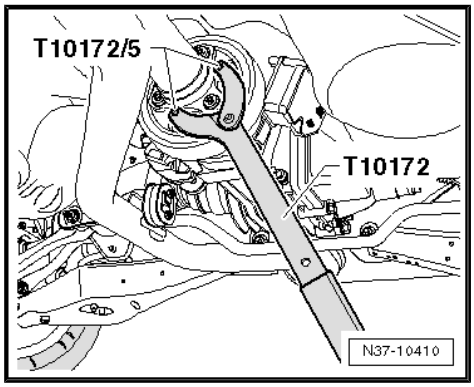

– Unscrew propshaft in the front bevel box -arrows-.

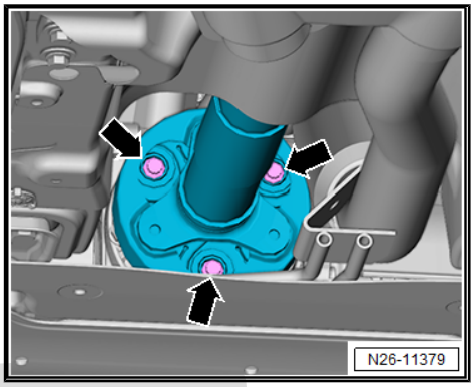

Continued for all vehicles

– Remove pendulum support ⇒ page 50 .

– Disconnect the connector -1- of the oil level and temperature sender - G266- .

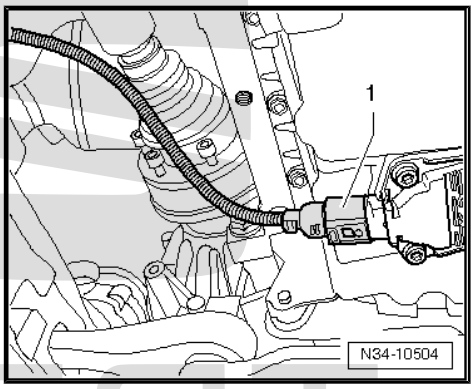

– Loosen clamp -arrow-, and push it to rear.

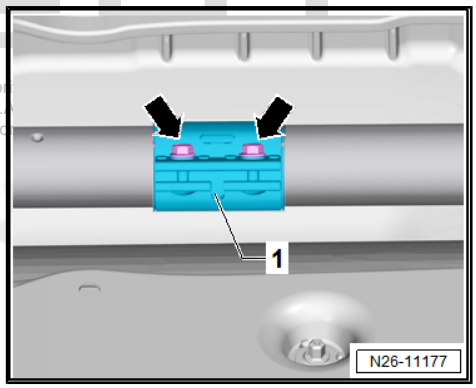

– Unscrew bolts -arrows-.

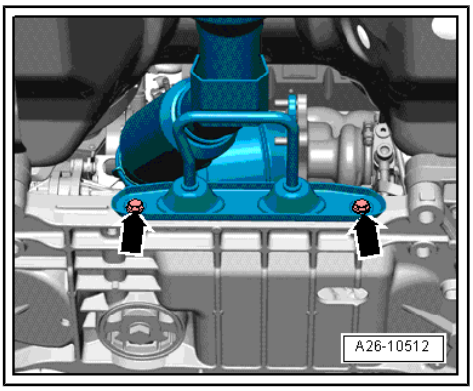

– Assemble engine support - T50015A- as shown in the diagram.

♦ Screw a bolt M8 x 30 mm -1- with a washer into the threaded hole of the subframe.

♦ Fit engine support - T50015A- to the supports of the positioner - T10533/2- using the bolt M8 x 30 mm -2- with a washer and nut.

♦ Affix support of the positioner - T10533/2- in the threaded hole of the gearbox using the bolt M12 x 20 mm of the positioner - T10533/4-

– By turning the spindle, the engine/gearbox unit is moved forwards until there is a small tension. Avoid collisions of components.

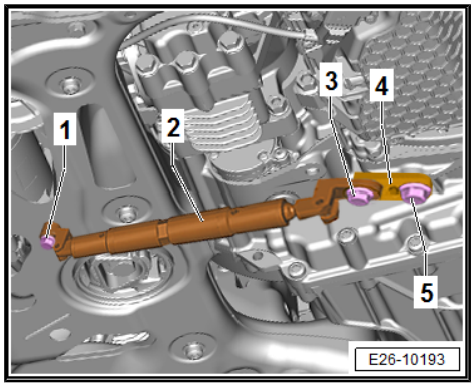

Vehicles with all-wheel drive

– When detaching and fixing the propshaft, it is always necessary to ensure that the socket -arrow- is not damaged.

– Detach propshaft of the bevel box and place it to the side on the left.

– Cover propshaft in the front area with a cloth to prevent damage to the surface coating.

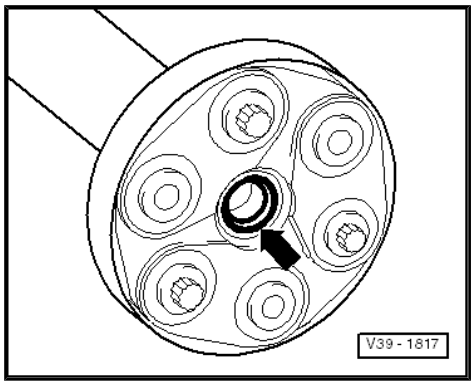

– Secure exhaust pipe -1- on propshaft with tensioning strap -2-.

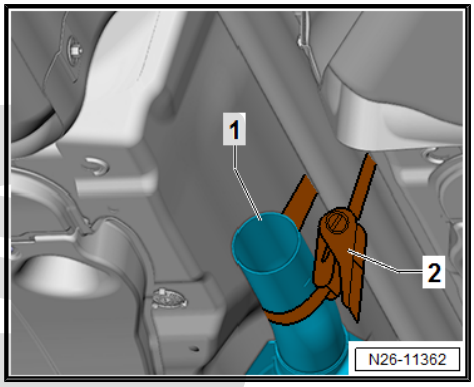

Continued for all vehicles

– Pull out catalytic converter through the tunnel opening by twisting 180º around its axis.

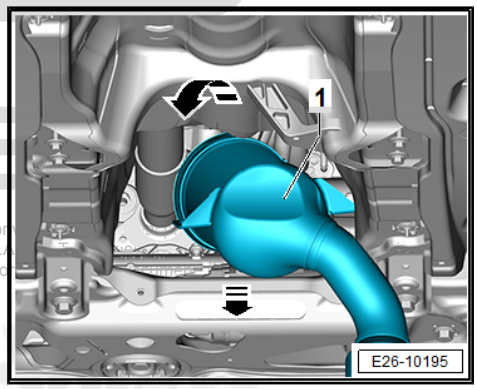

Installing

Install in the reverse order of removal, observing the following:

– Slide screwdriver -2- into the recess -Arrow- of the turbocharger and lever out the seal -1-.

– Insert a new seal.

– Fit catalytic converter to turbocharger and attach screw-type clip loosely without tightening it.

– Tighten nuts and screw-type clip ⇒ page 415 .

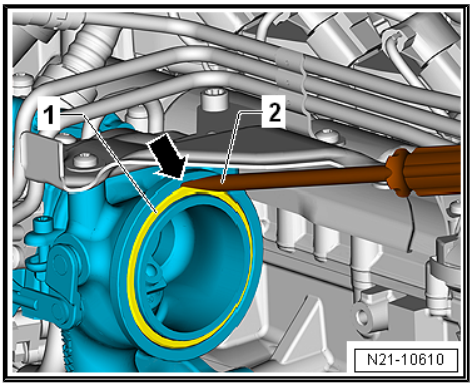

Vehicles with four-wheel drive

– Install propshaft ⇒ Rep. gr. 39 ; Propshaft; Removing and installing propshaft .

Continued for all vehicles

– Align exhaust system free of stress ⇒ page 411 .

Specified torques

- ⇒ “2.4 Removing and installing pendulum support”, page 50
- ⇒ “8.1 Exploded view - Lambda probe”, page 387
- ⇒ “2.1 Assembly overview - emission control”, page 414
- ⇒ “2.1 Installation overview - assembly mountings”, page 44
- ⇒ Rep. gr. 39 ; Propshaft; Installation overview - propshaft
- Assembly overview - noise insulation ⇒ General body repairs, exterior; Rep. gr. 66 ; Noise insulation; Assembly overview - noise insulation .
- ⇒ Running gear, axles, steering; Rep. gr. 44 ; Wheels, tyres; Wheel change .

2.2.2 Removing and installing catalytic converter, vehicles with particulate filter and front-wheel drive

Special tools and workshop equipment required

- Lambda probe open ring spanner set - 3337-

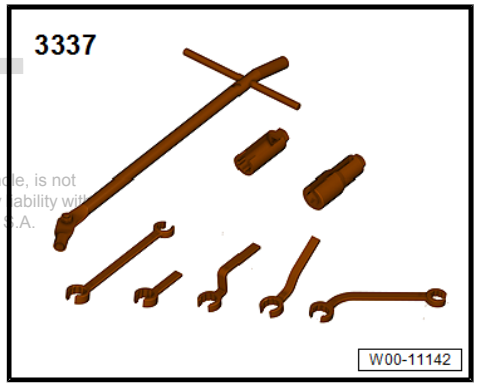

- Torque wrench - V.A.G 1331-

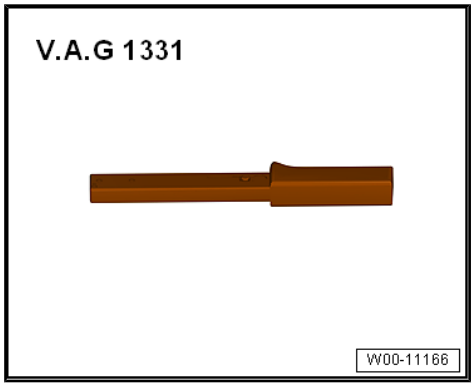

- Tool set - T10395 A-

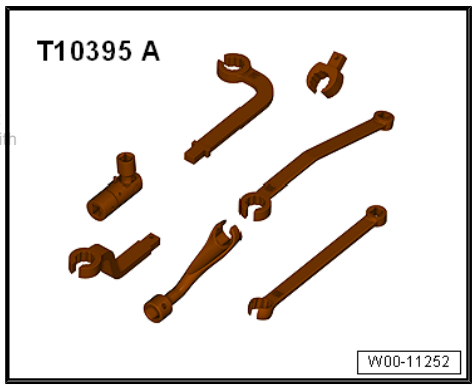

- Motor support - T50015A-

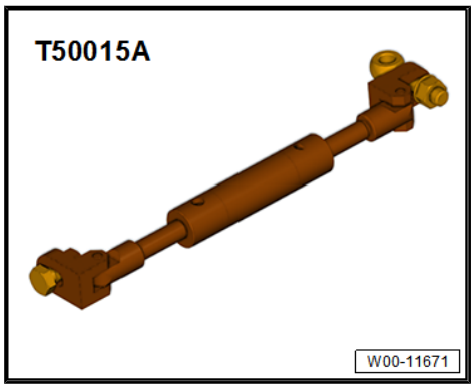

- Supports of the positioner - T10533/2-
- Bolt M12 x 20 mm of the positioner - T10533/4-
- High-temperature paste ⇒ Electronic parts catalogue (ETKA)

Removing

Note

- *The catalytic converter is removed together with the front exhaust pipe.*
- *Fit cable tie in same place when installing.*

– Remove engine cover panel ⇒ page 57 .

– Disconnect connector -1- for Lambda probe 1 after catalytic converter - GX7- .

– Lay wires on plenum chamber bulkhead to one side.

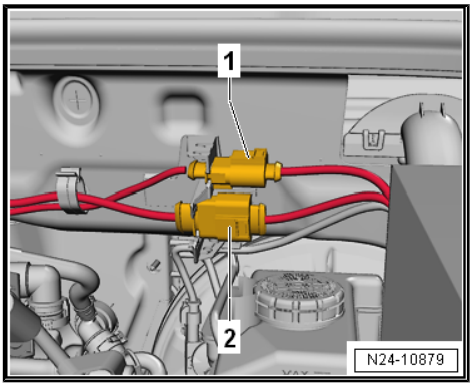

– Unscrew the Lambda probe -1- using tool from Lambda probe open ring spanner set - 3337/7- .

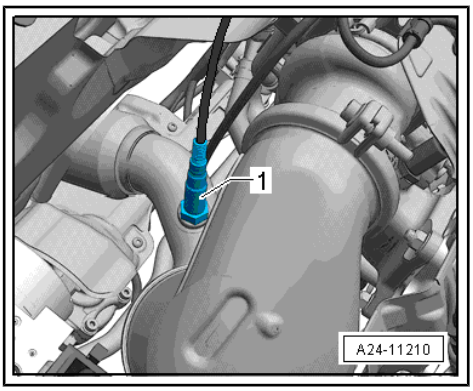

– Unscrew bolt -2- and slide clamp onto the turbocharger.

– Unscrew nuts -1 and 3-.

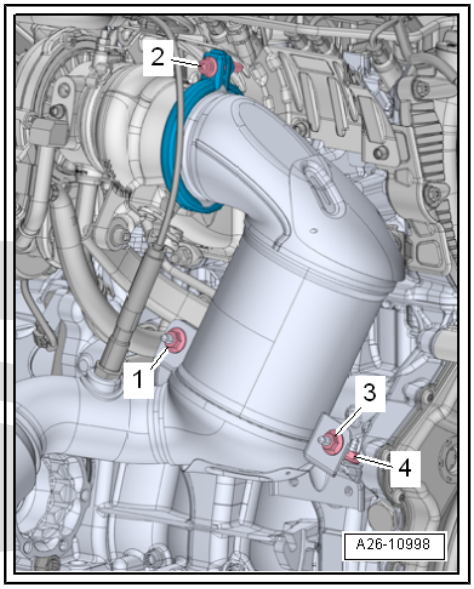

Note

- *For illustration purposes, the installation position is shown with the engine removed.*
- *Ignore -item 4-.*

Note

- *Risk of damage to flexible joint*
- *Do not allow the decoupling element to kink by more than 10°. Do not damage wire mesh on decoupling element.*

– Remove noise insulation ⇒ General body repairs, exterior; Rep. gr. 66 ; Noise insulation; Assembly overview - noise insulation .

– Remove middle underbody cladding ⇒ General body repairs, exterior; Rep. gr. 66 ; Underbody cladding; Removing and installing underbody cladding .

– Remove pendulum support ⇒ page 50 .

– Unscrew bolts -arrows- and remove heat shield for right drive shaft.

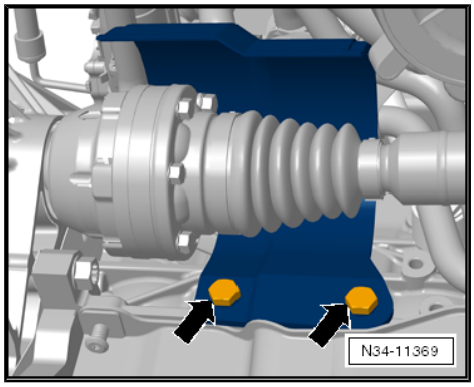

– Disconnect the connector -1- of the oil level and temperature sender - G266- .

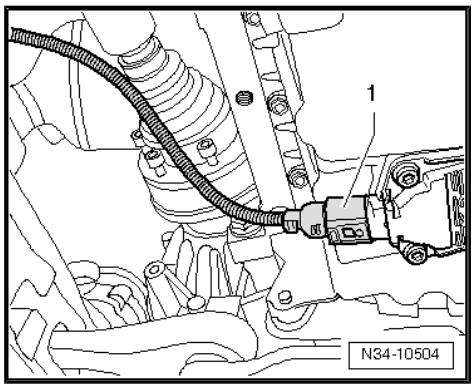

– Assemble engine support - T50015A- as shown in the diagram.

♦ Screw a bolt M8 x 30 mm -1- with a washer into the threaded hole of the subframe.

♦ Attach engine support - T50015A- -2- to support plate of positioner - T10533/2- -4-.

♦ Fasten engine support - T50015A- assembly kit -2- and support plate of positioner - T10533/2- -4- to the threaded hole of the gearbox using bolt M12 x 20 mm of positioner - T10533/4- -5-.

– By turning the spindle, the engine/gearbox unit is moved forwards until there is a small tension. Avoid collisions of components.

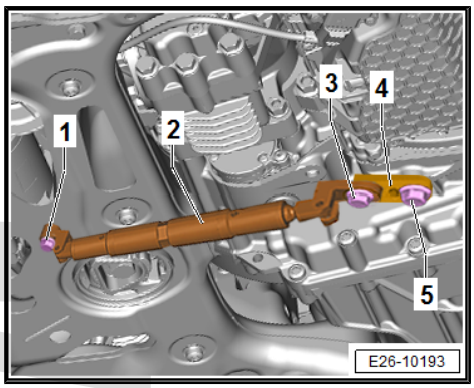

– Unscrew temperature sender before particulate filter - G506- -1- from the particulate filter.

– Open spring-type clips and detach the hoses -2- and -3- from pressure differential sender for particulate filter - G1037-

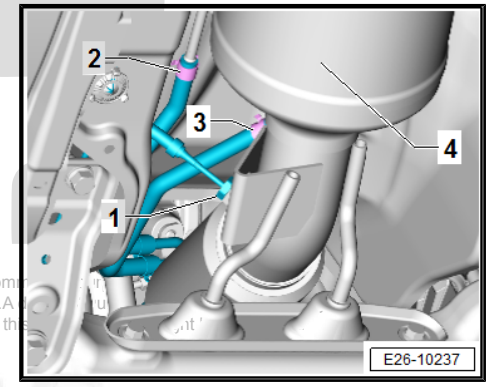

– Unscrew temperature sender before particulate filter - G527- -1- from the particulate filter -4-.

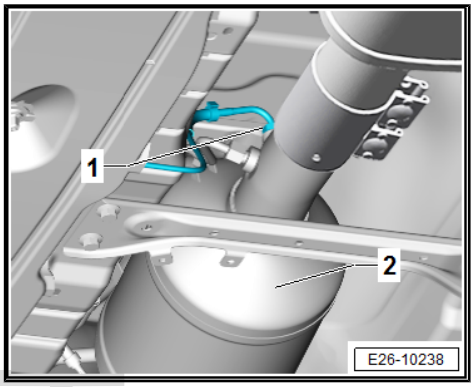

– Unscrew bolt -1- and remove wiring of pressure differential sender for particulate filter - G1037- -2- in -direction of arrow-.

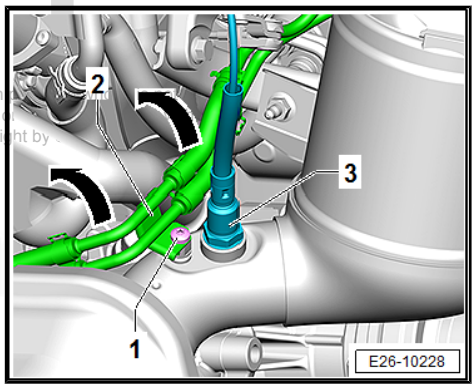

Note

Disregard -item 3-.

– Unscrew bolts -arrows-.

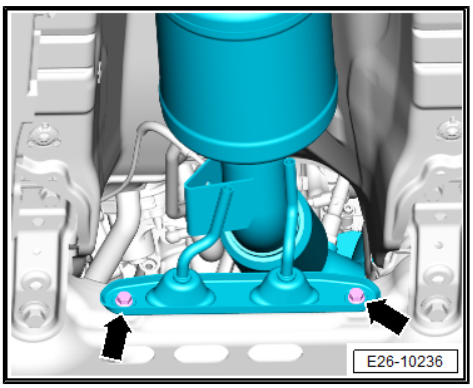

– Loosen clamp -1- between catalytic converter and front silencer, and push it in direction of travel -arrow-.

– Unscrew the nuts at the rear of the tunnel bridge and remove the tunnel bridge ⇒ Body Repairs; Rep. gr. 66 ; Underbody panelling; remove and install the front tunnel bridge .

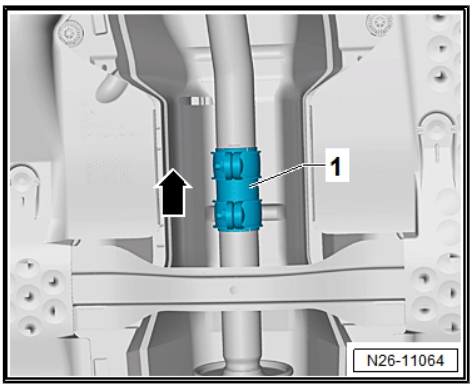

RHD vehicles

– Unscrew bolts and remove steering rack heat shield ⇒ running gear, axles, steering; Rep. gr. 48 ; steering rack, assembly overview - steering rack .

Continued for all vehicles

CAUTION

Danger of accident from weight of catalytic converter.

– Seek help from a second a mechanic for the following work.

– Remove catalytic converter -1- through the tunnel opening by twisting 180° around its axis.

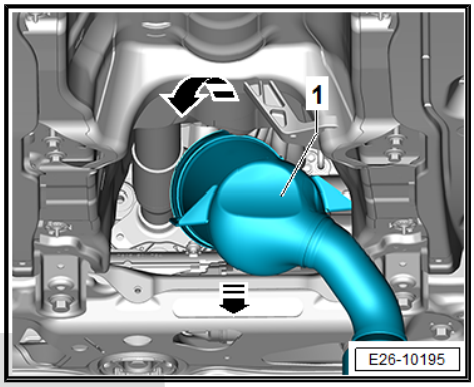

Installation

– Insert screwdriver -2- into recess -arrow- on turbocharger, and lever out seal -1-.

– Insert new seal.

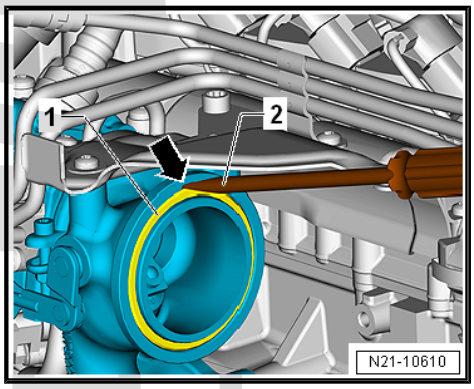

– Fit screw-type clip on turbocharger.

CAUTION

Danger of accident from weight of catalytic converter.

– Seek help from a second a mechanic for the following work.

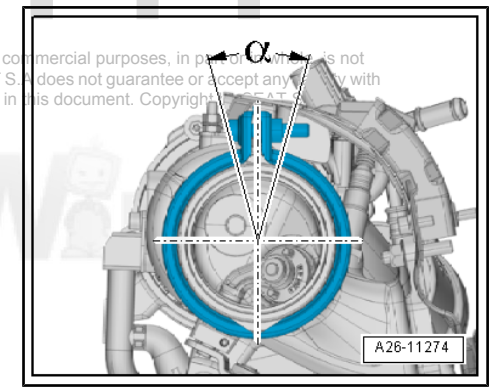

– Fit catalytic converter to turbocharger. Attach screw-type clip of catalytic converter loosely without tightening it.

– Tighten nuts and screw-type clip ⇒ page 415 . Note installation position of screw-type clip ⇒ page 415 .

– Installing heat shield of steering rack ⇒ Running gear, axles, steering; Rep. gr. 48 ; Steering rack; Assembly overview - steering rack .

– Tighten bolt -1- for the lines of the pressure differential sender for particulate filter - G1037- -2-.
– Install lambda probe 1 behind catalytic converter - GX7- -3-.
– Install hoses of pressure differential sender for particulate filter - G1037- with the spring-type clips.
– Install temperature sender in front of and behind particulate filter -G506- and -G527- ⇒ page 446 .
– Align exhaust system free of stress ⇒ page 411 .

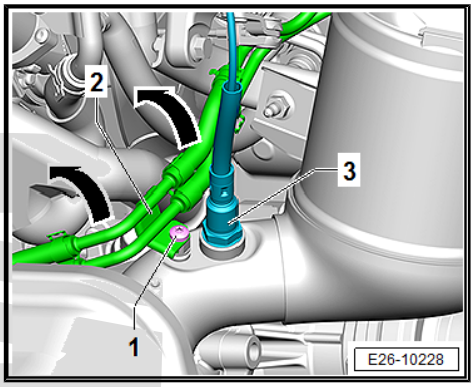

Further assembly is basically a reverse of the dismantling sequence.

Specified torques

- ⇒ “3 Exhaust gas temperature regulation”, page 445
- ⇒ “2.1 Installation overview - assembly mountings”, page 44
- ⇒ “8.1 Exploded view - Lambda probe”, page 387
- ⇒ “2.1 Assembly overview - emission control”, page 414
- ⇒ Body Repairs; Rep. gr. 66 ; Underbody trim; Removing and installing front tunnel bridge
- Underbody trim; assembly overview - underbody trim⇒ General body repairs, exterior; Rep. gr. 66 ; Underbody trim; assembly overview - underbody trim .
- ⇒ Running gear, axles, steering; Rep. gr. 48 ; Steering rack, assembly overview - steering rack .
- Noise insulation; Assembly overview - noise insulation ⇒ General body repairs, exterior; Rep. gr. 66 ; Noise insulation; Assembly overview - noise insulation

2.2.3 Removing and installing catalytic converter, vehicles with particulate filter and all-wheel drive

Special tools and workshop equipment required

- Counter-hold tool - T10172-

- Tensioning strap - T10038-

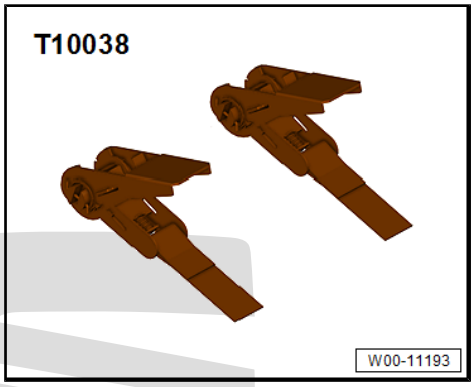

- Lambda probe open ring spanner set - 3337-

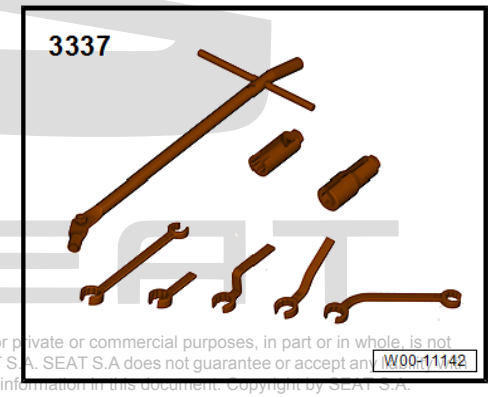

- Nozzle - 3247-

- Torque wrench - V.A.G 1331-

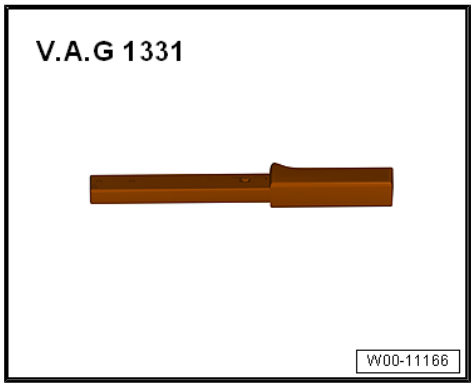

- Tool set - T10395 A-

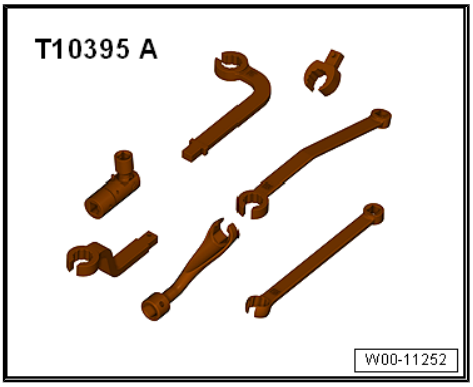

- Motor support - T50015A-

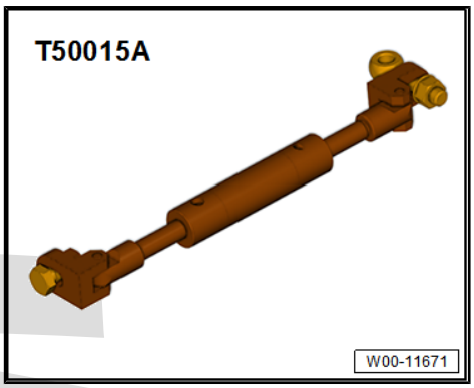

- Supports of the positioner - T10533/2-
- Bolt M12 x 20 mm of the positioner - T10533/4-
- High-temperature paste ⇒ Electronic parts catalogue (ETKA)

Removing

Note

- *The catalytic converter is removed together with the front exhaust pipe.*
- *Fit cable tie in same place when installing.*

– Remove engine cover panel ⇒ page 57 .
– Disconnect connector -1- for Lambda probe 1 after catalytic converter - GX7- .
– Lay wires on plenum chamber bulkhead to one side.

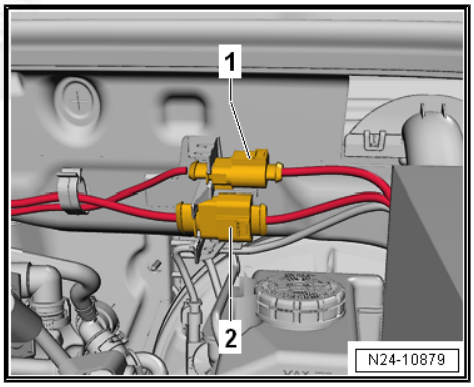

– Unscrew the Lambda probe -1- using tool from Lambda probe open ring spanner set - 3337/7- .

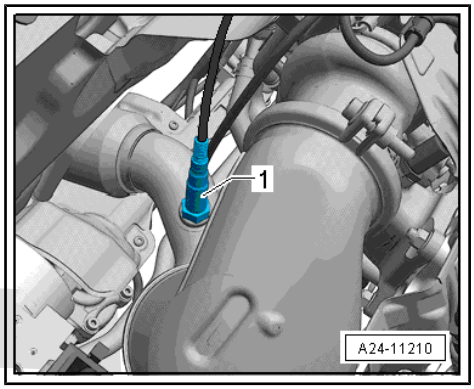

– Unscrew bolt -2- and slide clamp onto the turbocharger.

– Unscrew nuts -1 and 3-.

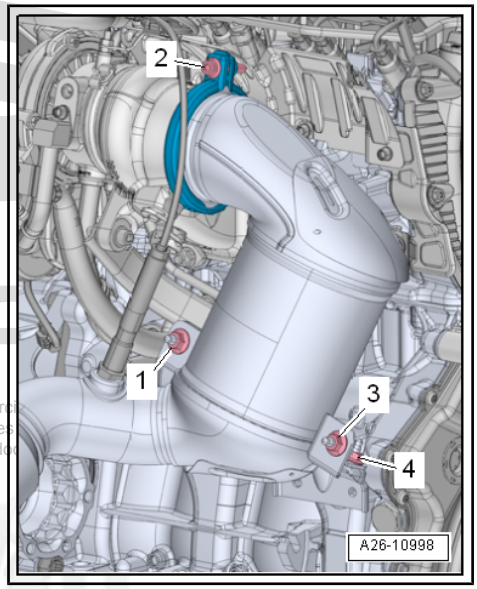

Note

- *For illustration purposes, the installation position is shown with the engine removed.*
- *Ignore -item 4-.*

Note

- *Risk of damage to flexible joint*
- *Do not allow the decoupling element to kink by more than 10°. Do not damage wire mesh on decoupling element.*

– Remove noise insulation ⇒ General body repairs, exterior; Rep. gr. 66 ; Noise insulation; Assembly overview - noise insulation .

– Remove middle underbody cladding ⇒ General body repairs, exterior; Rep. gr. 66 ; Underbody cladding; Removing and installing underbody cladding .

– Remove right wheel.

– Unscrew screws -arrows- with the bit - 3247- and remove heat shield -1-.

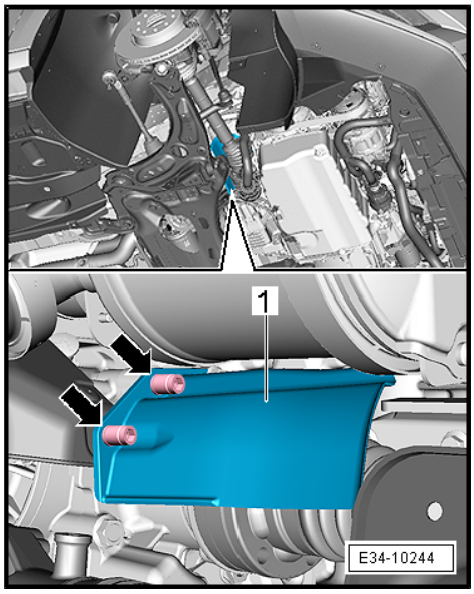

– Unclip wiring -1- and unscrew nuts -arrows-.
– Unscrew bolts -3-.

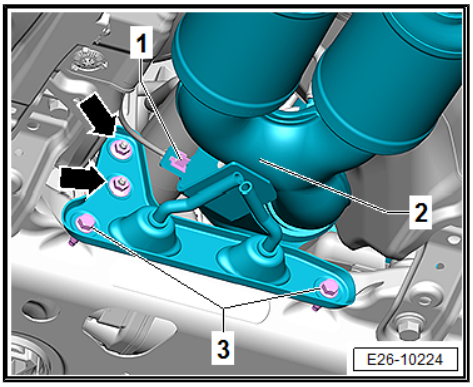

– Unscrew the bolts -arrows- and remove the heat protection plate -1-.

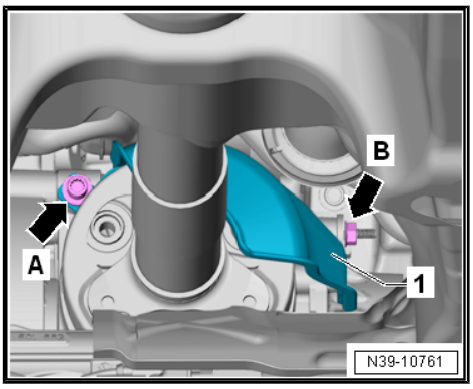

– Mark the position of the propshaft to the flange of the bevel box.

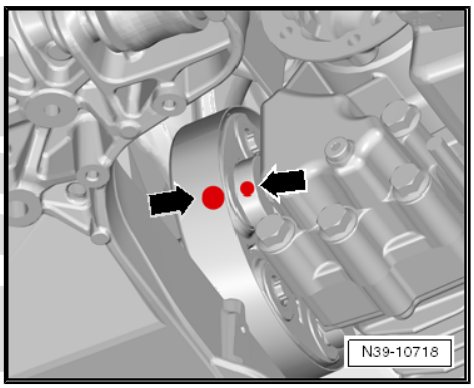

– To loosen and tighten propshaft, counterhold on rear final drive.

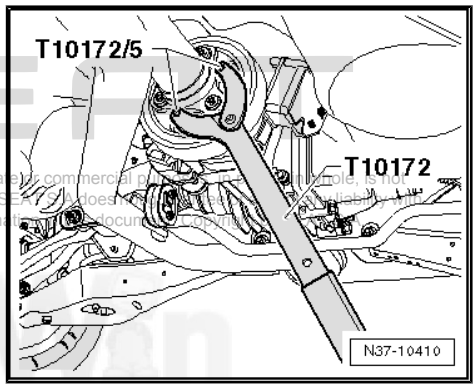

– Unscrew propshaft in the front bevel box -arrows-.

– By turning the spindle, the engine/gearbox unit is moved forwards until there is a small tension. Avoid collisions of components.

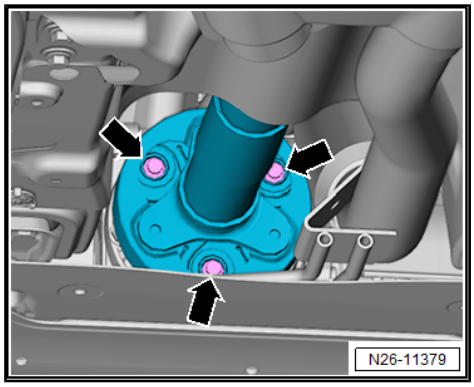

– When detaching and fixing the propshaft, it is always necessary to ensure that the socket -arrow- is not damaged.

– Detach propshaft of the bevel box and place it to the side on the left.

– Cover propshaft in the front area with a cloth to prevent damage to the surface coating.

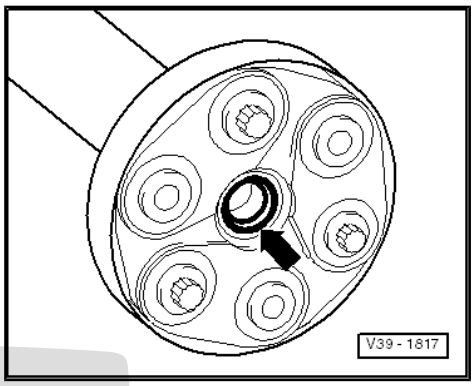

Note

- *Risk of damage to flexible joint*
- *Do not allow the decoupling element to kink by more than 10°. Do not damage wire mesh on decoupling element.*

– Disconnect the connector -1- of the oil level and temperature sender - G266- .

– Remove pendulum support ⇒ page 50 .

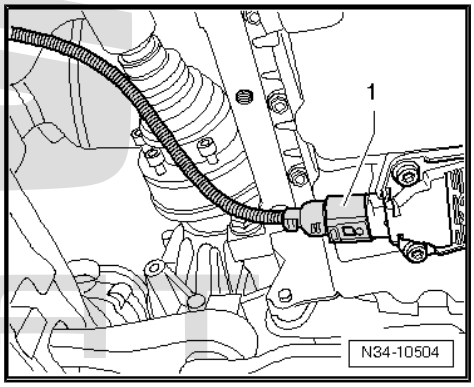

– Connect the engine support - T50015A- -2- as shown in the diagram.

- Screw a bolt M8 x 30 mm -1- with a washer into the threaded hole of the subframe.
- Attach engine support - T50015A- -2- to support plate of positioner - T10533/2- -4-.
- Fasten engine support - T50015A- assembly kit -2- and support plate of positioner - T10533/2- -4- to the threaded hole of the gearbox using bolt M12 x 20 mm of positioner - T10533/4- -5-.

– By turning the spindle, the engine/gearbox unit is moved forwards until there is a small tension. Avoid collisions of components.

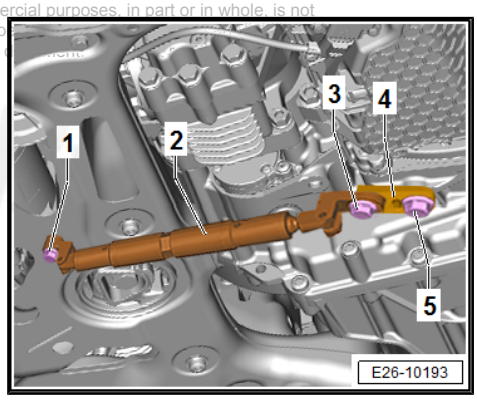

– Unscrew bolt -1- and remove wiring of pressure differential sender for particulate filter - G1037- -2- in -direction of arrow-.

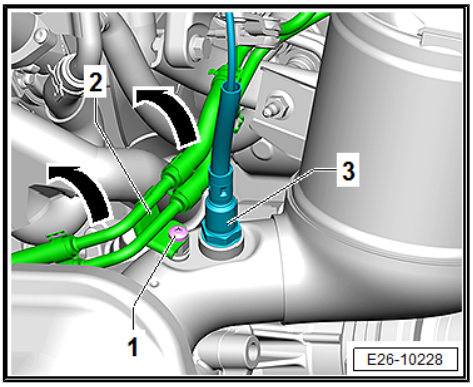

Note

Disregard -item 3-.

– Open spring-type clip -1- and remove the hose from pressure differential sender for particulate filter - G1037- .

– Unscrew temperature sender in front of particulate filter - G506- -2-.

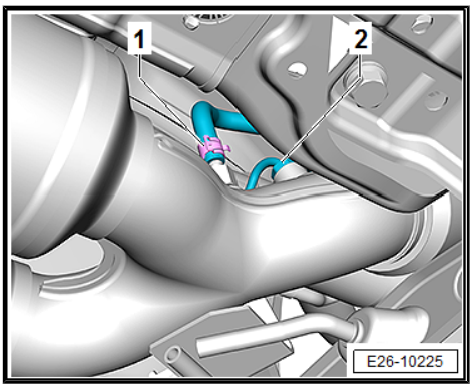

– Open spring-type clip -2- and remove the hose from pressure differential sender for particulate filter 1 - G1037- .

– Unscrew temperature sender behind particulate filter - G527- -1-.

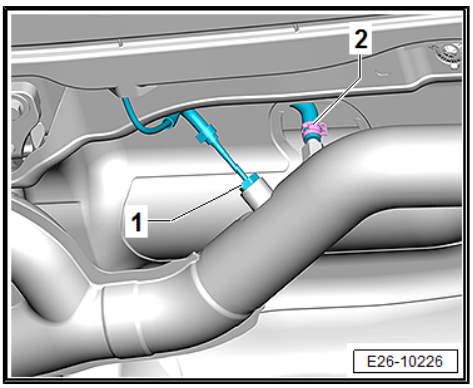

RHD vehicles

– Unscrew bolts and remove steering rack heat shield ⇒ running gear, axles, steering; Rep. gr. 48 ; steering rack, assembly overview - steering rack .

Continued for all vehicles

– Unscrew bolts -arrows-, and remove heat shield -1- from steering rack.

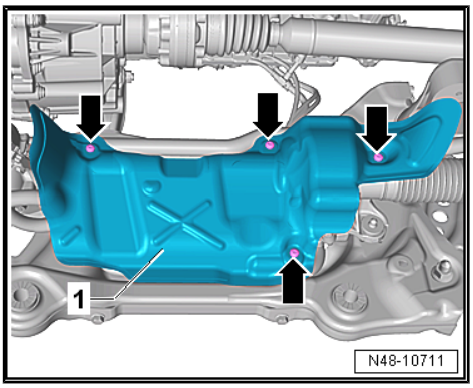

– Loosen clamp -arrow-, and push it to rear.

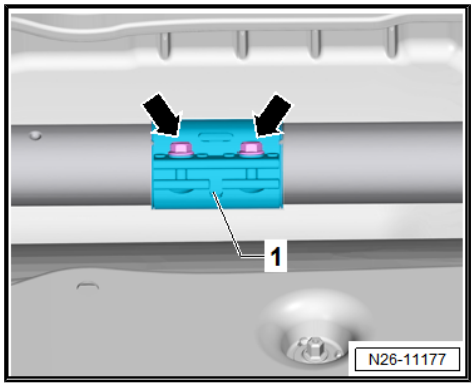

– Secure exhaust pipe -1- on propshaft with tensioning strap -2-.

CAUTION

Danger of accident from weight of catalytic converter.

– Seek help from a second a mechanic for the following work.

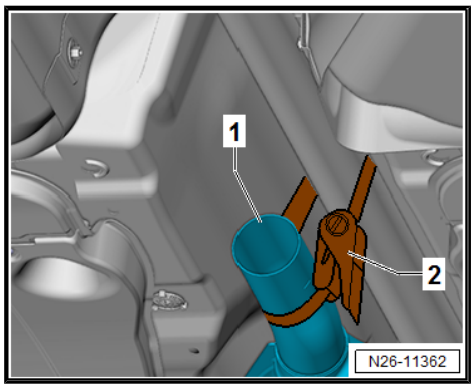

– Remove catalytic converter -1- through the tunnel opening by twisting 180º around its axis.

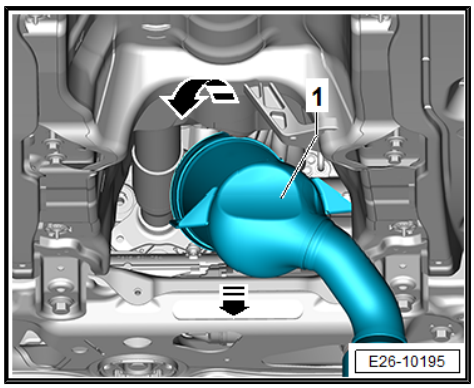

Installation

– Insert screwdriver -2- into recess -arrow- on turbocharger, and lever out seal -1-.

– Insert new seal.

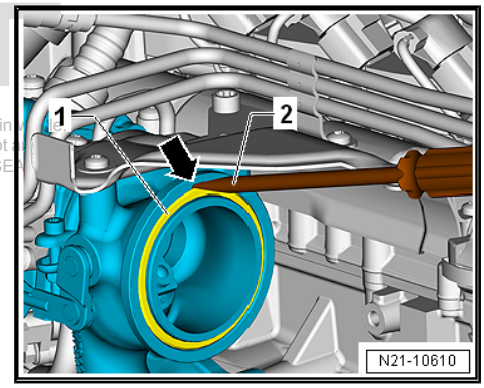

– Fit screw-type clip on turbocharger.

CAUTION

Danger of accident from weight of catalytic converter.

– Seek help from a second a mechanic for the following work.

– Fit catalytic converter to turbocharger. Attach screw-type clip of catalytic converter loosely without tightening it.

– Tighten nuts and screw-type clip ⇒ page 415 . Note installation position of screw-type clip ⇒ page 415 .

– Installing heat shield of steering rack ⇒ Running gear, axles, steering; Rep. gr. 48 ; Steering rack; Assembly overview - steering rack .

– Tighten bolt -1- for the lines of the pressure differential sender for particulate filter - G1037- -2-.

– Install lambda probe 1 behind catalytic converter - GX7- -3-.

– Install propshaft ⇒ Rep. gr. 39 ; Propshaft; Removing and installing propshaft .

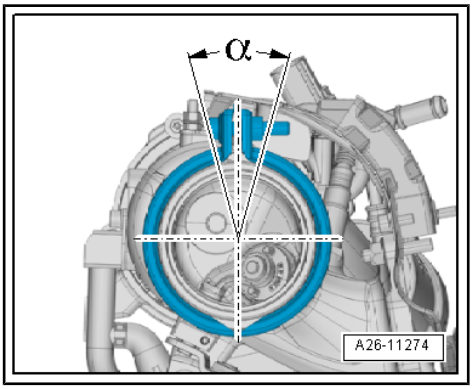

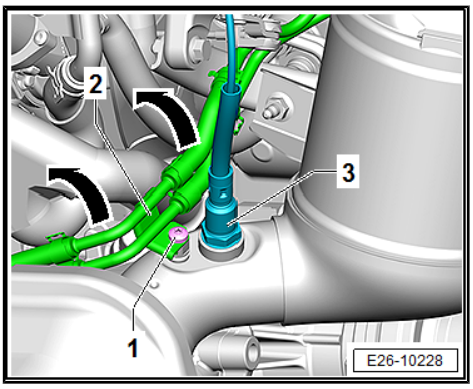

– Attach wiring -1- and tighten nuts -arrows-.

– Tighten bolts -3-.

– Install hoses of pressure differential sender for particulate filter - G1037- with the spring-type clips.

– Install temperature sender in front of and behind particulate filter -G506- and -G527- ⇒ page 446 .

– Align exhaust system free of stress ⇒ page 411 .

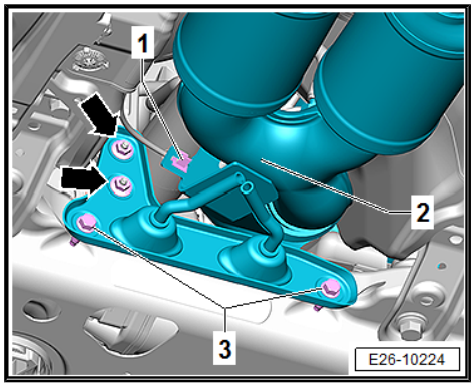

Further assembly is basically a reverse of the dismantling sequence.

Specified torques

- ⇒ “3 Exhaust gas temperature regulation”, page 445
- ⇒ “2.1 Installation overview - assembly mountings”, page 44
- ⇒ “8.1 Exploded view - Lambda probe”, page 387
- ⇒ “2.1 Assembly overview - emission control”, page 414
- ⇒ Running gear, axles, steering; Rep. gr. 48 ; Steering rack, assembly overview - steering rack .
- ⇒ Rep. gr. 39 ; Propshaft; Assembly overview - propshaft
- Noise insulation; Assembly overview - noise insulation ⇒ General body repairs, exterior; Rep. gr. 66 ; Noise insulation; Assembly overview - noise insulation
- ⇒ Running gear, axles, steering; Rep. gr. 44 ; Wheels, tyres; Wheel change .
- ⇒ Body Repairs; Rep. gr. 66 ; Underbody trim; Removing and installing front tunnel bridge
- Underbody trim; assembly overview - underbody trim⇒ General body repairs, exterior; Rep. gr. 66 ; Underbody trim; assembly overview - underbody trim .

2.3 Removing and installing holder of pressure differential sender for particulate filter - G1037-

Removing

– Pull off connector -1- of pressure differential sender for particulate filter - G1037- .

– Remove catalytic converter ⇒ page 420 .

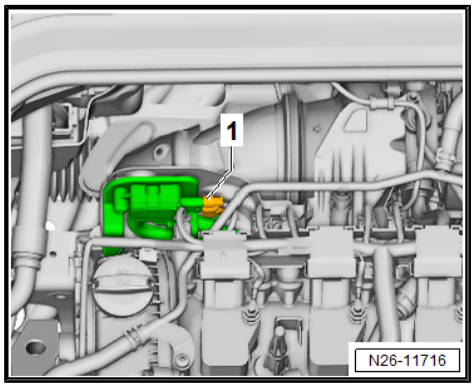

– Unscrew bolts -arrows- and nut -1-. Detach cover section.

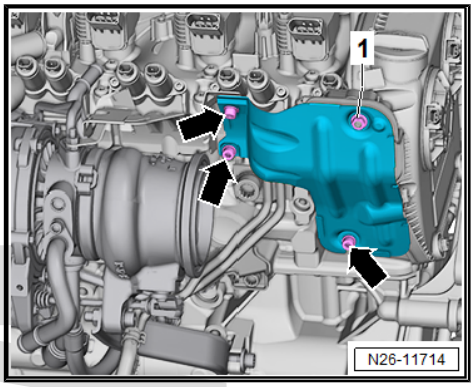

– Unscrew bolts -arrows-, and detach bracket with hoses.

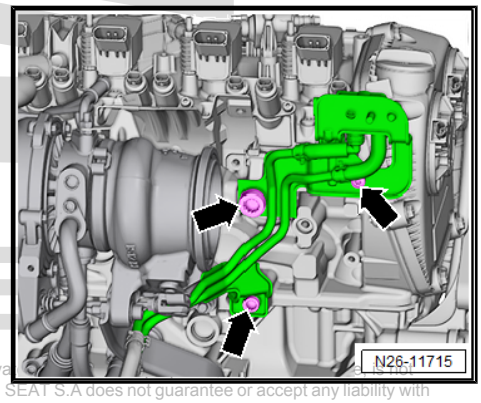

Installation

The assembly steps are basically a reverse of the dismantling procedure.

Specified torques

♦ ⇒ “2.1 Assembly overview - emission control”, page 414

2.4 Removing and installing exhaust flap control unit -J883- / -J945-

Removing

Fitting location:
⇒ “1.1.8 Assembly overview - silencers, Ateca Cupra”, page 400

Control unit 2 for exhaust flaps - J945- , left side.

Control unit for exhaust flaps - J883- , right side.

– Unplug electrical connector -1- from exhaust flap control unit -2-.

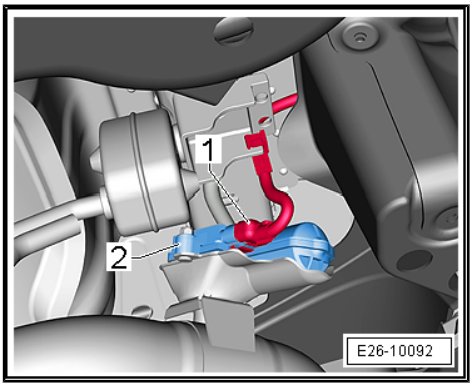

– Unscrew nuts -3-, and remove exhaust flap control unit -1-.

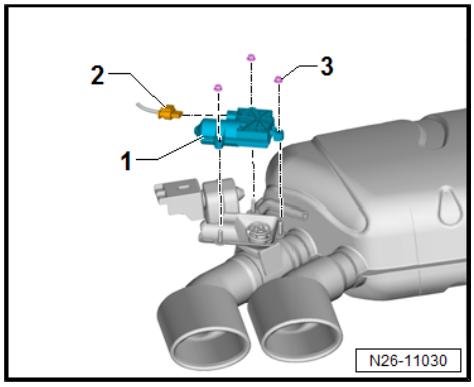

Installation

Install in the reverse order of removal, observing the following:

Specified torques

♦ ⇒ Fig. ""Exhaust flap control unit – specified torque"" , page 400

3 Exhaust gas temperature regulation

⇒ “3.1 Assembly overview - exhaust gas temperature regulation”, page 445

⇒ “3.2 Removing and installing parts of exhaust gas temperature regulation”, page 446

3.1 Assembly overview - exhaust gas temperature regulation

Assembly overview - exhaust gas temperature regulation, front-wheel drive

1 - Temperature sender before particulate filter - G506-

- ❑ Removing or installing ⇒ page 446
- ❑ 45 Nm

2 - Temperature sender after particulate filter - G527-

- ❑ Removing or installing ⇒ page 448
- ❑ 45 Nm

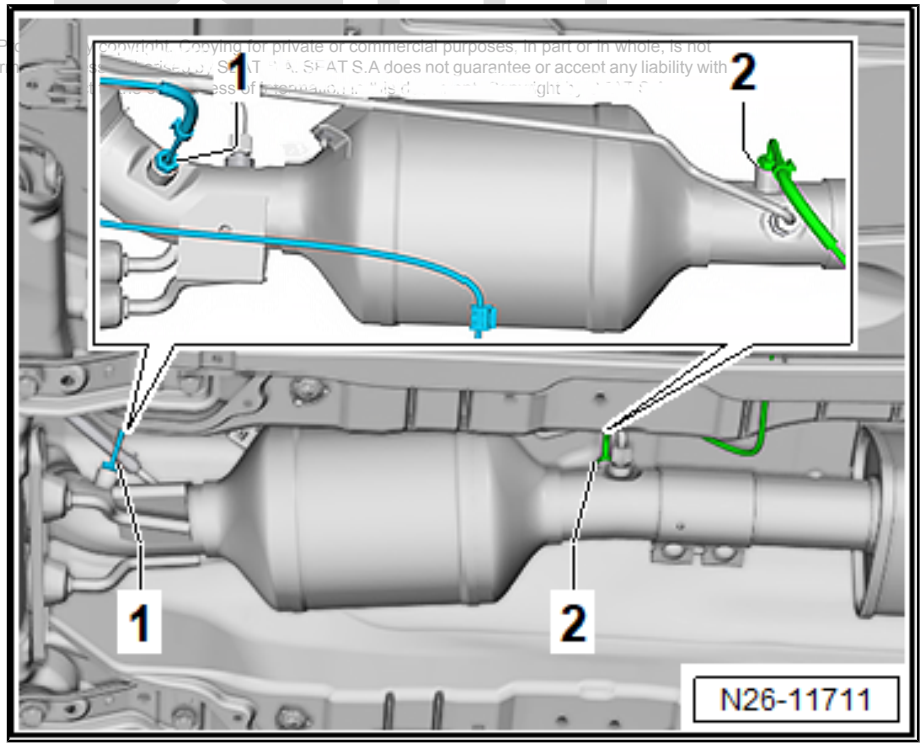

Assembly overview - exhaust gas temperature regulation, all-wheel drive

1 - Temperature sender before particulate filter - G506-

- ❑ Removing or installing ⇒ page 446
- ❑ 45 Nm

2 - Temperature sender after particulate filter - G527-

- ❑ Removing or installing ⇒ page 448
- ❑ 45 Nm

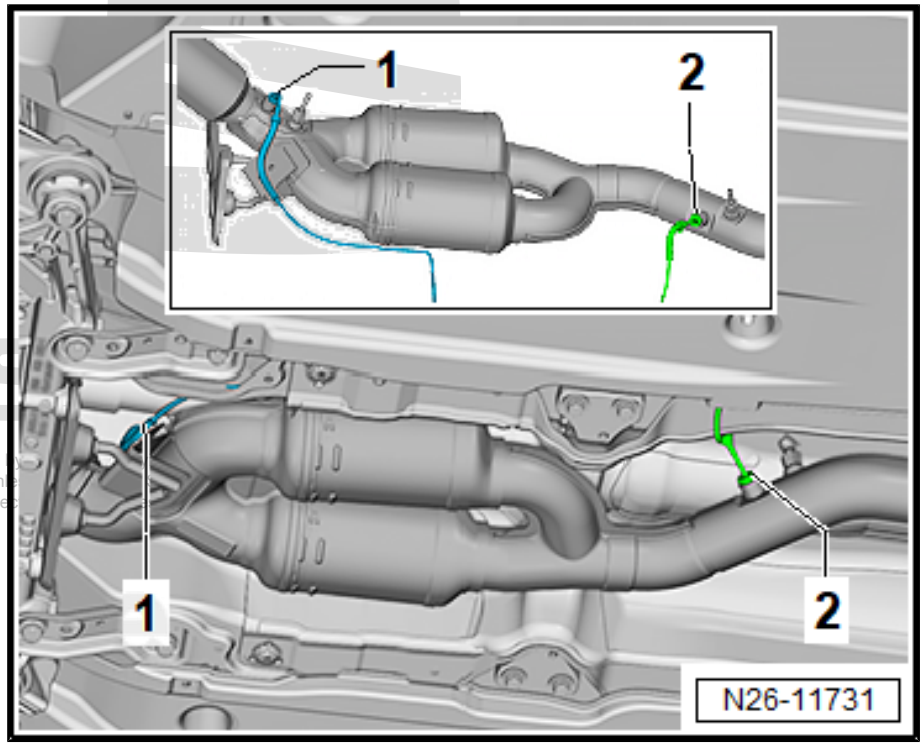

3.2 Removing and installing parts of exhaust gas temperature regulation

⇒ "3.2.1 Removing and installing temperature sender in front of particulate filter G506 ", page 446

⇒ "3.2.2 Removing and installing temperature sender after particulate filter G527 ", page 448

3.2.1 Removing and installing temperature sender in front of particulate filter - G506-

Special tools and workshop equipment required

- ♦ Torque wrench - V.A.G 1331-

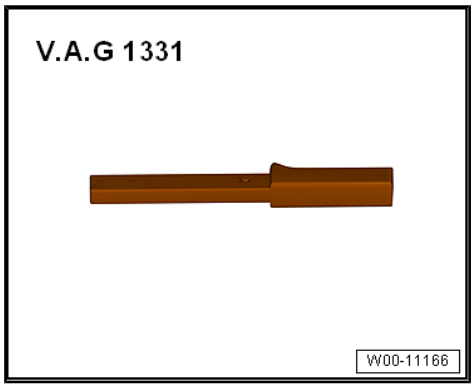

♦ Tool set - T10395 A-

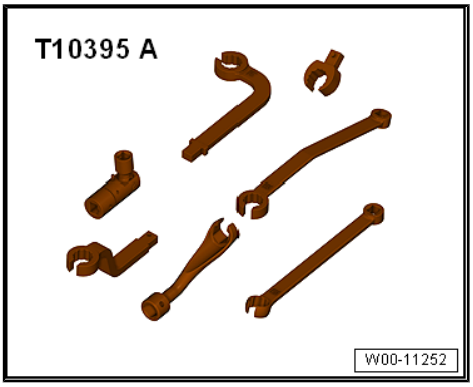

Removing

- Observe safety precautions when working on the exhaust system ⇒ page 3 .

– Remove rear centre underbody trim, if any, behind subframe ⇒ General body repairs, exterior; Rep. gr. 66 ; Underbody trim; assembly overview - underbody trim .

– Unscrew the four plastic nuts -arrows- on the left underbody trim -1- and move the trim slightly downward.

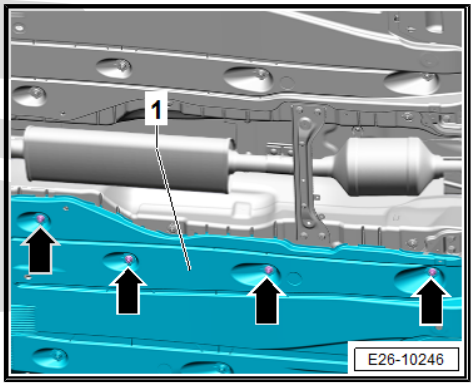

– Release from bracket and disconnect electrical connector -2- from temperature sender in front of particulate filter - G506- .

– Prise out the securing clip -arrow- (for heat shield of the centre tunnel) using the removal lever - 80 200-.

– Unclip wires of the temperature sender in front of particulate filter - G506- from fasteners.

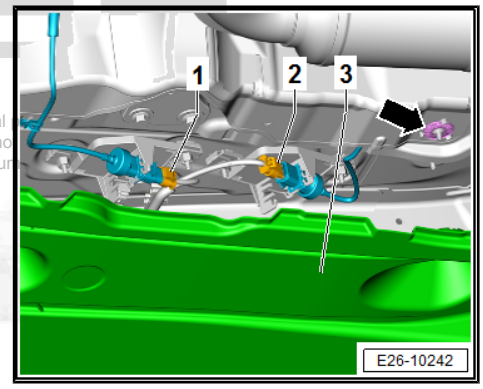

Vehicles with all-wheel drive

– Unclip and disconnect wires -1- of particulate filter -2-.

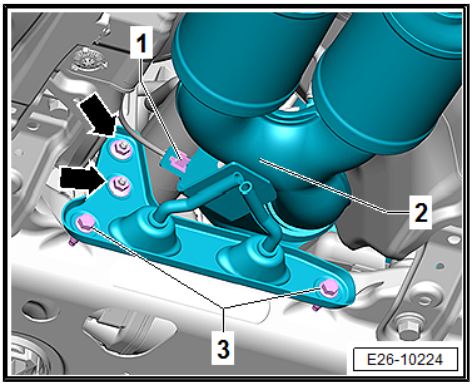

Note

Disregard -item 3- and -arrows-.

– Unscrew temperature sender in front of particulate filter - G506- -2-.

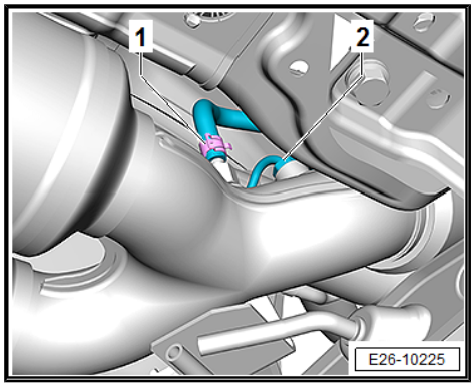

Note

Disregard -item 1-.

Vehicles with front-wheel drive

– Unscrew temperature sender before particulate filter - G506- -arrow-.

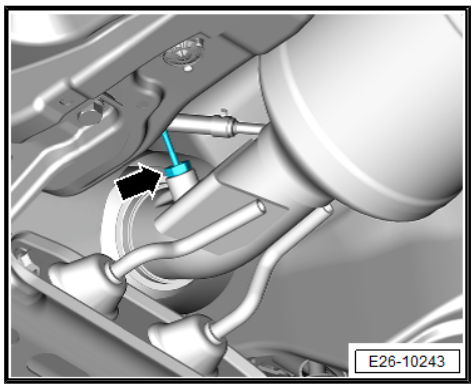

Installation

Install in reverse order of removal, observing the following:

- Take care to protect exhaust gas temperature sender from knocks and impact: do not use exhaust gas temperature sensors which have fallen to the ground.

– To apply tightening torque on temperature sender in front of particulate filter - G506- , use spanner - T10395/6- .

Vehicles with all-wheel drive

– Move temperature sender in front of particulate filter - G506- to installation position:

- Angle -α- = max. 15°.

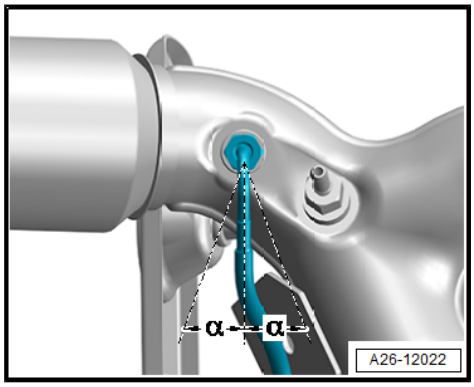

Vehicles with front-wheel drive

– Move temperature sender in front of particulate filter - G506- to installation position:

- Angle -α- = max. 15°.

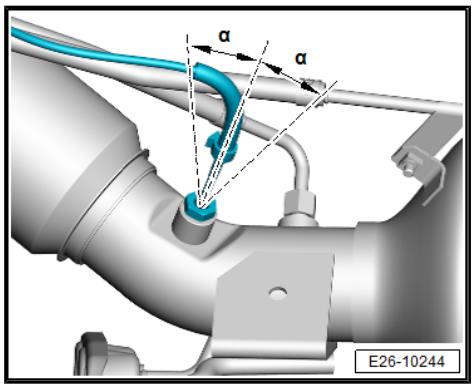

Specified torques

◆ ⇒ “3.1 Assembly overview - exhaust gas temperature regulation”, page 445

◆ ⇒ General body repairs, exterior; Rep. gr. 66 ; Underbody cladding; Assembly overview - underbody cladding

3.2.2 Removing and installing temperature sender after particulate filter - G527-

Special tools and workshop equipment required

♦ Torque wrench - V.A.G 1331-

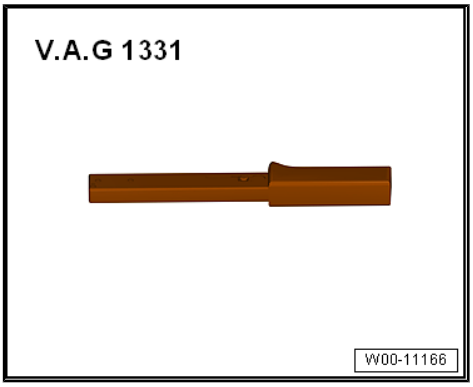

♦ Tool set - T10395 A-

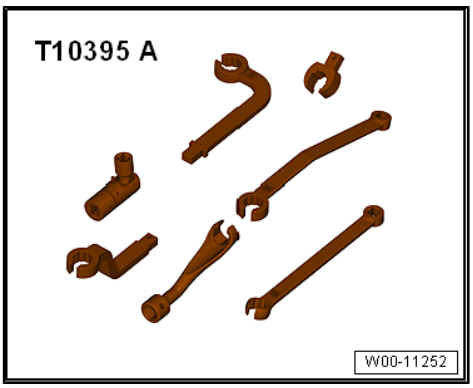

Removing

- Observe safety precautions when working on the exhaust system ⇒ page 3 .

– Unscrew the four plastic nuts -arrows- on the left underbody trim -1- and move the trim slightly downward.

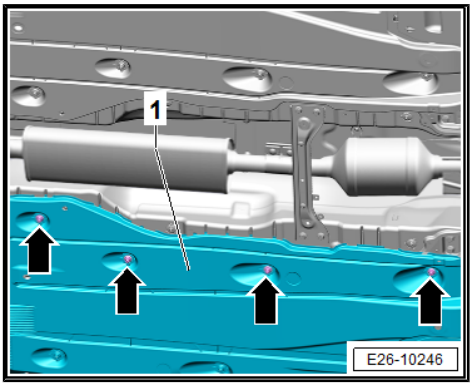

– Release from bracket and disconnect electrical connector -1- from temperature sender behind particulate filter - G527- .

– Unclip wires of temperature sender behind particulate filter - G527- from fasteners.

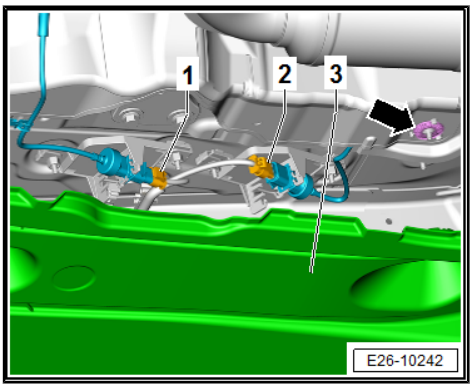

Vehicles with all-wheel drive

– Unscrew temperature sender behind particulate filter - G527- -1-.

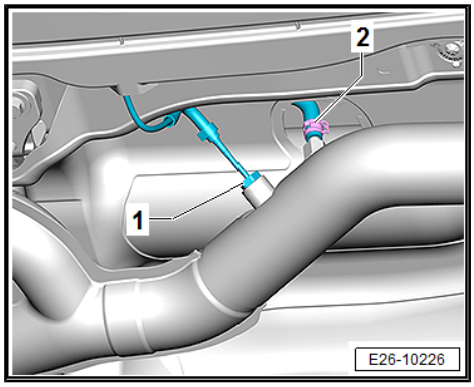

Note

Disregard -item 2-.

Vehicles with front-wheel drive

– Unscrew temperature sender behind particulate filter - G527- -1-.

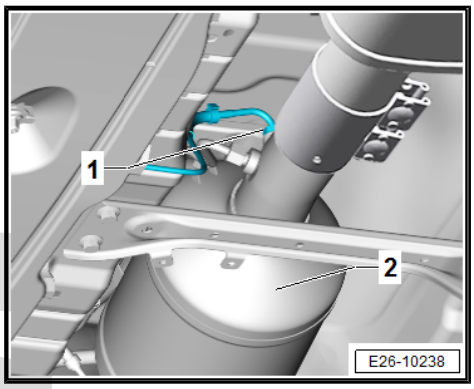

Installation

Install in reverse order of removal, observing the following:

- Take care to protect exhaust gas temperature sender from knocks and impact: do not use exhaust gas temperature sensors which have fallen to the ground.

Vehicles with all-wheel drive

– Move temperature sender behind particulate filter - G527- to installation position:

- Angle -α- = max. 15°.

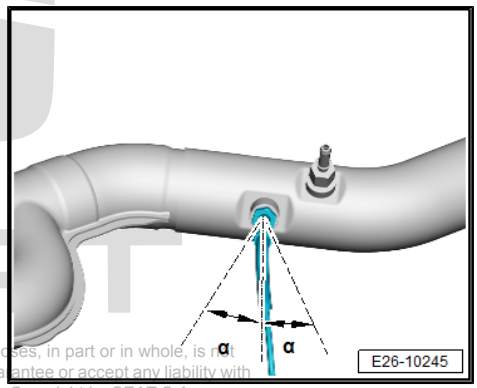

Vehicles with front-wheel drive

– Move temperature sender behind particulate filter - G527- to installation position:

- Angle -α- = max. 15°.

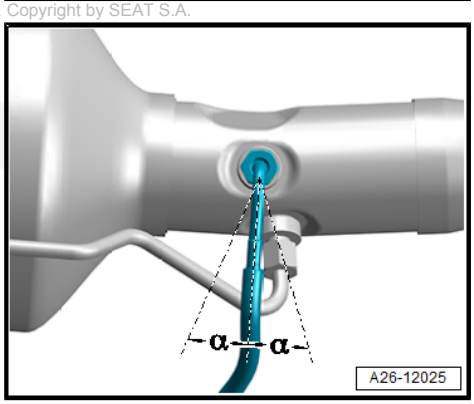

Specified torques

◆ ⇒ “3.1 Assembly overview - exhaust gas temperature regulation”, page 445

◆ ⇒ General body repairs, exterior; Rep. gr. 66 ; Underbody cladding; Assembly overview - underbody cladding

28 – Ignition system

1 Ignition system

⇒ “1.1 Assembly overview - ignition system”, page 451

⇒ “1.2 Ignition coils with output stage: removing and fitting”, page 452

⇒ “1.3 Removing and installing knock sensor 1 G61 ”, page 454

⇒ “1.4 Removing and installing Hall sender ”, page 455

⇒ “1.5 Removing and installing engine speed sensor G28 ”, page 456

1.1 Assembly overview - ignition system

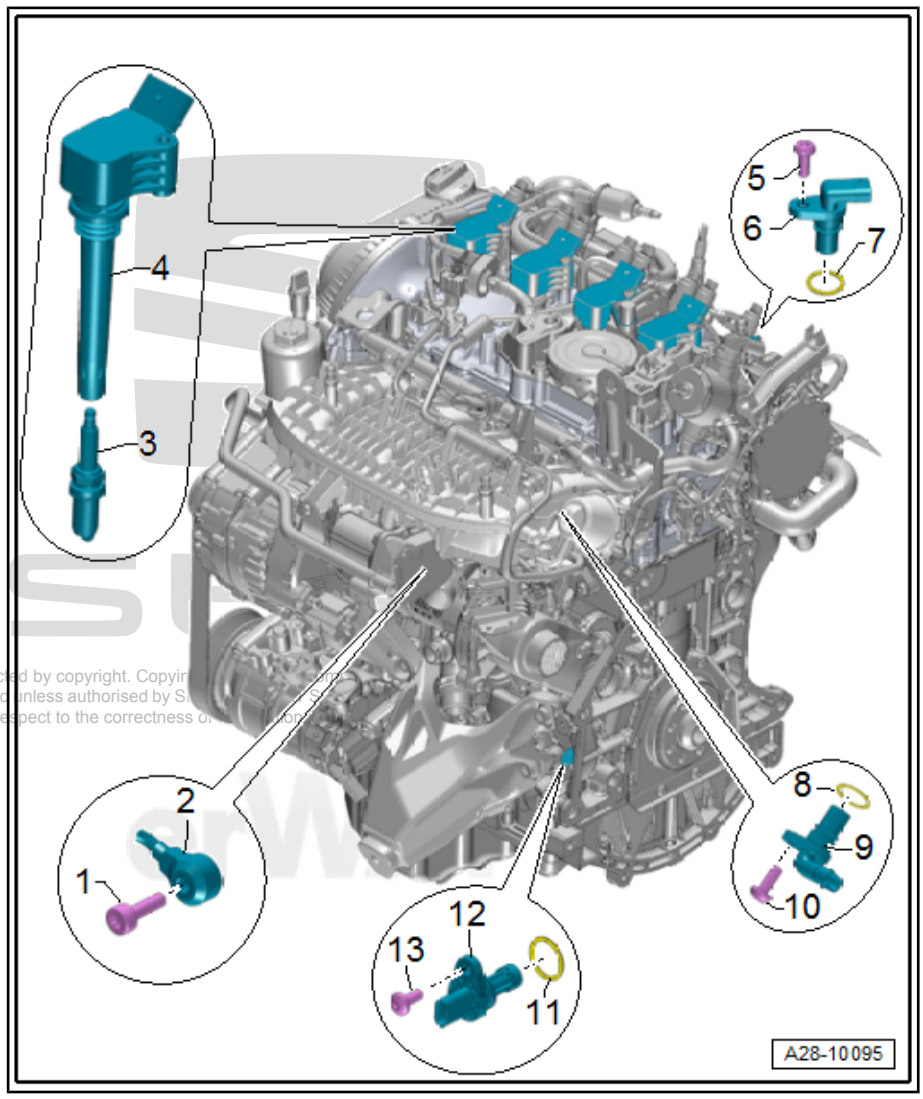

1 - Bolt

- ❑ Must be renewed if removed
- ❑ The specified torque influences the function of the knock sensor.
- ❑ 8 Nm +90°

2 - Knock sensor 1 - G61-

- ❑ Removing and fitting ⇒ “1.3 Removing and installing knock sensor 1 G61 ”, page 454

3 - Spark plug

- ❑ Remove and install using wrench - 3122 B- .
- ❑ Intervals for changing filter ⇒ Maintenance ; Booklet 501
- ❑ 30 Nm

4 - Ignition coil with output stage:

- ❑ Ignition coil 1 with output stage - N70-
- ❑ Ignition coil 2 with output stage - N127-
- ❑ Ignition coil 3 with output stage - N291-
- ❑ Ignition coil 4 with output stage - N292-
- ❑ 10 Nm.
- ❑ Removing and fitting ⇒ page 452

5 - Bolt

- ❑ 9 Nm

6 - Hall sender 3 - G300-

- ❑ Inspect O-ring for damage before fitting
- ❑ Removing and fitting ⇒ page 455

7 - O-ring

- ❑ Renew if damaged

8 - O-ring

- ❑ Renew if damaged.

9 - Hall sensor - G40-

- ❑ Inspect O-ring for damage before fitting
- ❑ Removing and fitting ⇒ page 455

10 - Bolt

- ❑ 9 Nm

11 - O-ring

- ❑ Renew if damaged

12 - Engine speed sensor - G28-

- ❑ Inspect O-ring for damage before fitting
- ❑ Removing and fitting ⇒ page 456

13 - Bolt

- ❑ 9 Nm

1.2 Ignition coils with output stage: removing and fitting

Special tools and workshop equipment required

- ♦ Puller - T10530-

Removing

– Remove engine cover panel ⇒ page 57 .

– If fitted, detach earth wire -1- of ignition coil to be removed, and unscrew bolt -arrow-.

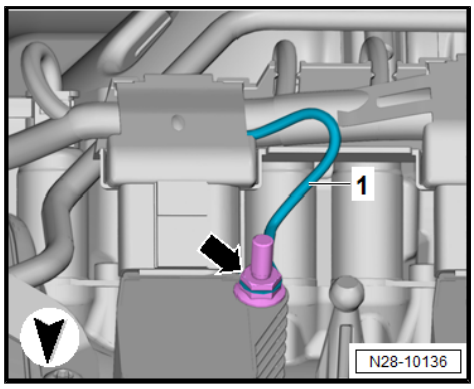

– Release connectors and unplug all connectors from the ignition coils at the same time.

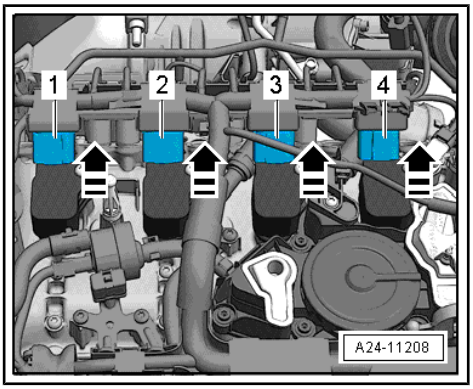

– Insert puller - T10530- into hole -1- in ignition coil.
– Turn knurled nut -2- clockwise until puller is secured in place.

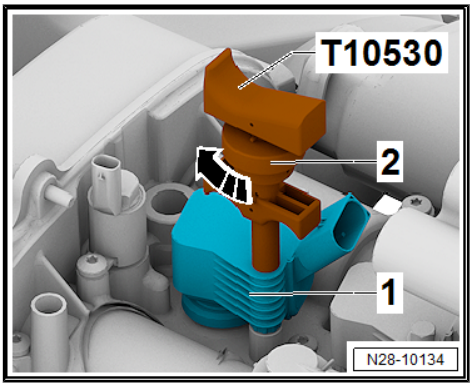

– Working vertically upwards, carefully pull ignition coil out with puller - T10530- .

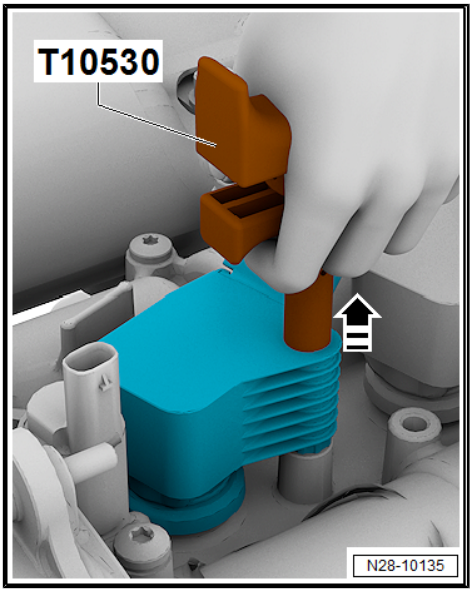

Installing

Install in reverse order of removal, observing the following:

– Press ignition coils onto spark plugs by hand evenly (do not use tools).
– Tighten ignition coils.

Specified torques

♦ ⇒ “1.1 Assembly overview - ignition system”, page 451

Component	Tightening torque
Ignition coil earth wire	9 Nm.

1.3 Removing and installing knock sensor 1 - G61-

Removing

– Unplug electrical connector -2- from knock sensor 1 - G61- .

– Remove actuator for engine temperature regulation - N493- ⇒ page 282 .

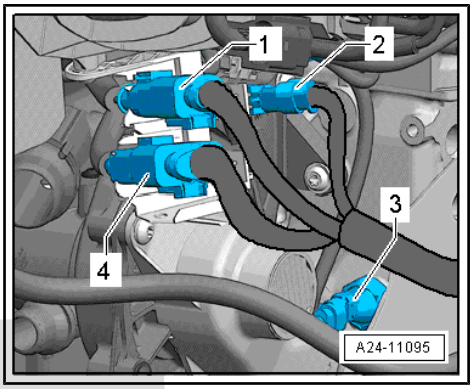

Note

Knock sensor I - G61- is located below the intake manifold and behind the coolant pump.

– Remove knock sensor I - G61- -arrow-.

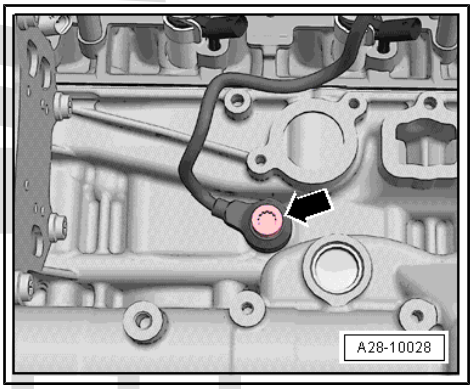

Fitting

– Install in reverse order:

– Note installation position of knock sensor I - G61- .

– Install actuator for engine temperature regulation - N493- ⇒ page 282 .

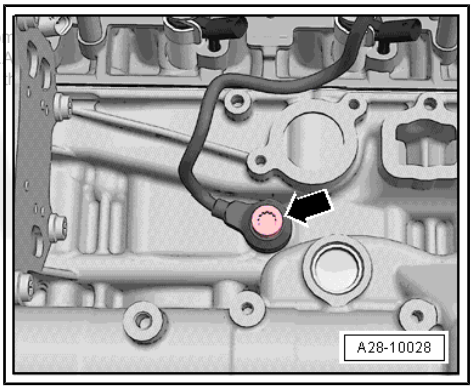

Specified torques

- ⇒ “2.1 Exploded view - coolant pump and thermostat”, page 268
- ⇒ “1.1 Assembly overview - ignition system”, page 451

1.4 Removing and installing Hall sender

⇒ "1.4.1 Removing and installing Hall sensor G40 ", page 455

⇒ "1.4.2 Removing and installing Hall sender 3 G300 ", page 455

1.4.1 Removing and installing Hall sensor - G40-

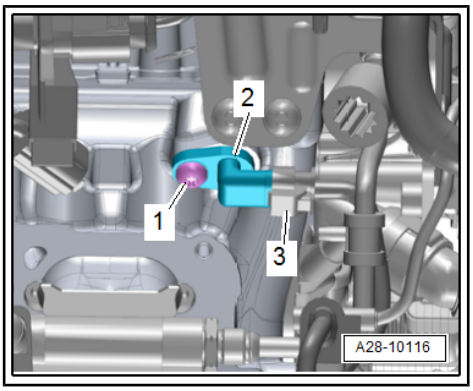

Removing

– Remove engine cover panel ⇒ page 57 .

– Now remove the intake manifold ⇒ "4.2 Removing and installing intake manifold", page 359 .

– Unplug electrical connector -3-.

– Unscrew bolt -1-, and remove Hall sender -2-.

Fitting

Installation is carried out in the reverse order; note the following:

– Renew O-ring.

Specified torques

♦ ⇒ "1.1 Assembly overview - ignition system", page 451

1.4.2 Removing and installing Hall sender 3 - G300-

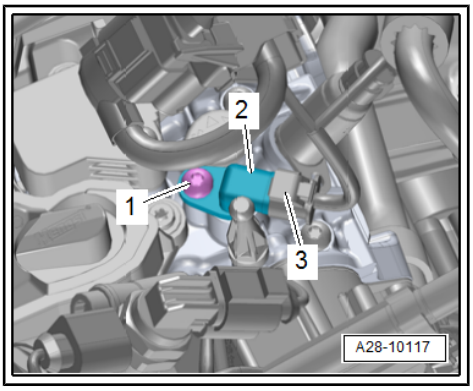

Removing

– Remove engine cover panel ⇒ page 57 .

– Unplug electrical connector -3-.

– Unscrew bolt -1-, and remove Hall sender -2-.

Fitting

Installation is carried out in the reverse order; note the following:

– Renew O-ring.

Specified torques

♦ ⇒ "1.1 Assembly overview - ignition system", page 451

1.5 Removing and installing engine speed sensor - G28-

Removing

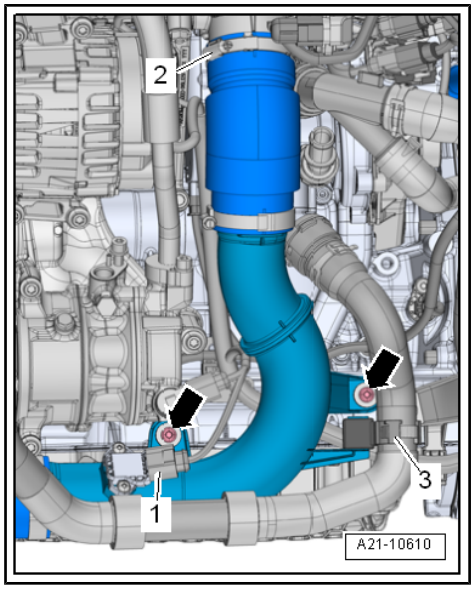

- Remove noise insulation ⇒ General body repairs, exterior; Rep. gr. 66 ; Noise insulation; Assembly overview - noise insulation .
- Free coolant hose -3-.
- Pull connector -1- off charge air pressure sender - G31- .
- Remove bolts -arrows-.
- Release hose clip -2- on air hose and pull air hose off throttle valve module - GX3- .
- Remove air hose downwards.

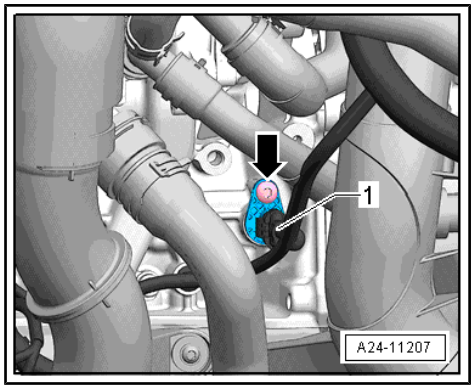

- Unplug electrical connector -1- at engine speed sender - G28- -2-.
- Unscrew the securing bolt -arrow-.

Fitting

Install in reverse order:

- Install air hose.
- Remove noise insulation ⇒ General body repairs, exterior; Rep. gr. 66 ; Noise insulation; Assembly overview - noise insulation .

Specified torques

◆ ⇒ “1.1 Assembly overview - ignition system”, page 451
◆ ⇒ “2.1 Assembly overview - charge air system”, page 319