Service
Service
Service

Service Manual

Horizontal Frequency
30- 94 kHz

TABLE OF CONTENTS

Description	Page	Description	Page
Table Of Contents	1	7. Schematic	22
Revision List	2	7.1 Main Board	22
1. Monitor Specification	3	7.2 Power Board	31
2. LCD Monitor Description	4	7.3 Key Board	33
3. Operation Instruction	5	8.PCB Layout	34
3.1.General Instructions	5	8.1.Main Board	34
3.2. Control Button	5	8.2.Power Board	35
3.3 Adjusting the Picture	6	8.3.Key Board	35
4. Input/Output Specification	11	8.4.USB Board	36
4.1. Input Signal Connector	11	9. Maintainability	37
4.2. Factory Preset Display Modes	14	9.1.Equipments and Tools Requirement	37
4.3. Power Supply Requirements	15	9.2.Trouble Shooting	38
5. Panel Specification	16	10.White-Balance, Luminance adjustment	44
5.1.General Feature	16	11.Mechanical Instructions	46
5.2. Optical Characteristics	17	12.Monitor Exploded View	51
6. Block Diagram	18	13.BOM List	53
6.1 Software Flow Chart	18	14. Different Parts List	84
6.2. Electrical Block Diagram	20		

SAFETY NOTICE

ANY PERSON ATTEMPTING TO SERVICE THIS CHASSIS MUST FAMILIARIZE HIMSELF WITH THE CHASSIS AND BE AWARE OF THE NECESSARY SAFETY PRECAUTIONS TO BE USED WHEN SERVICING ELECTRONIC EQUIPMENT CONTAINING HIGH VOLTAGES.

CAUTION: USE A SEPARATE ISOLATION TRANSFOMER FOR THIS UNIT WHEN SERVICING

Revision List

Version	Date	Revision History	TPV Model Name
A00	Jun.-24-08	Initial release	J248GGDKW9HPNN
A01	Aug.-19-2008	Add new BOM in item 14	J248GGDBW9HF2N
			J248GGDBW9HA2N

1. Monitor Specification

Display	60.96 cm wide screen	24 inches wide screen
Type	TFT LCD	
Viewable Image Size	60.96 cm diagonal	24–inch diagonal
Tilt Adjustment	-5 to 30°	
Swivel Adjustment	-45 to 45°	
Height Adjustment	110 mm range	3.94–inch range
Pivot	Clockwise	
Maximum Weight (Unpacked)	9.3 kg	29.1 lbs.
Dimensions (include base)		
Height (maximum)	52.1 cm	20.5 inches
Depth	25.3 cm	10 inches
Width	55.6 cm	21.9 inches
Maximum Graphic Resolution	1920 x 1200 (75 Hz) analog input	
	1920 x 1200 (75 Hz) digital input	
Optimum Graphic Resolution	1920 x 1200 (60Hz) analog input	
	1920 x 1200 (60Hz) digital input	
Text Mode	720 × 400	
Dot Pitch	0.270 (H) × 0.270 (W) mm	
Horizontal Frequency	30 to 94 kHz	
Vertical Refresh Rate	48 to 85 Hz	
Environmental Requirements Temperature		
Operating Temperature	5 to 35° C	41 to 95° F
Storage Temperature	-20 to 60° C	-4 to 140° F

Relative Humidity	20 to 80%	
Power Source	90 – 265 VAC, 45/63 Hz	
Altitude:		
Operating	0 to 3657.6 m	0 to 12,000 feet
Storage	0 to 12192 m	0 to 40,000 feet
Power Consumption (maximum)	<120 watts	
Input Terminal	Two DVI-I connectors with DVI to DVI-D and DVI to VGA cables included; one DisplayPort connector with cable included; one HDMI connector with cable included; one Composite connector; one S-Video connector; one set of Component connectors	

2. LCD Monitor Description

The LCD Monitor will contain a main board, a power board, a key board and a USB board which house the flat panel control logic, brightness control logic and DDC.

The power board will provide AC to DC Inverter voltage to drive the backlight of panel and the main board chips each voltage.

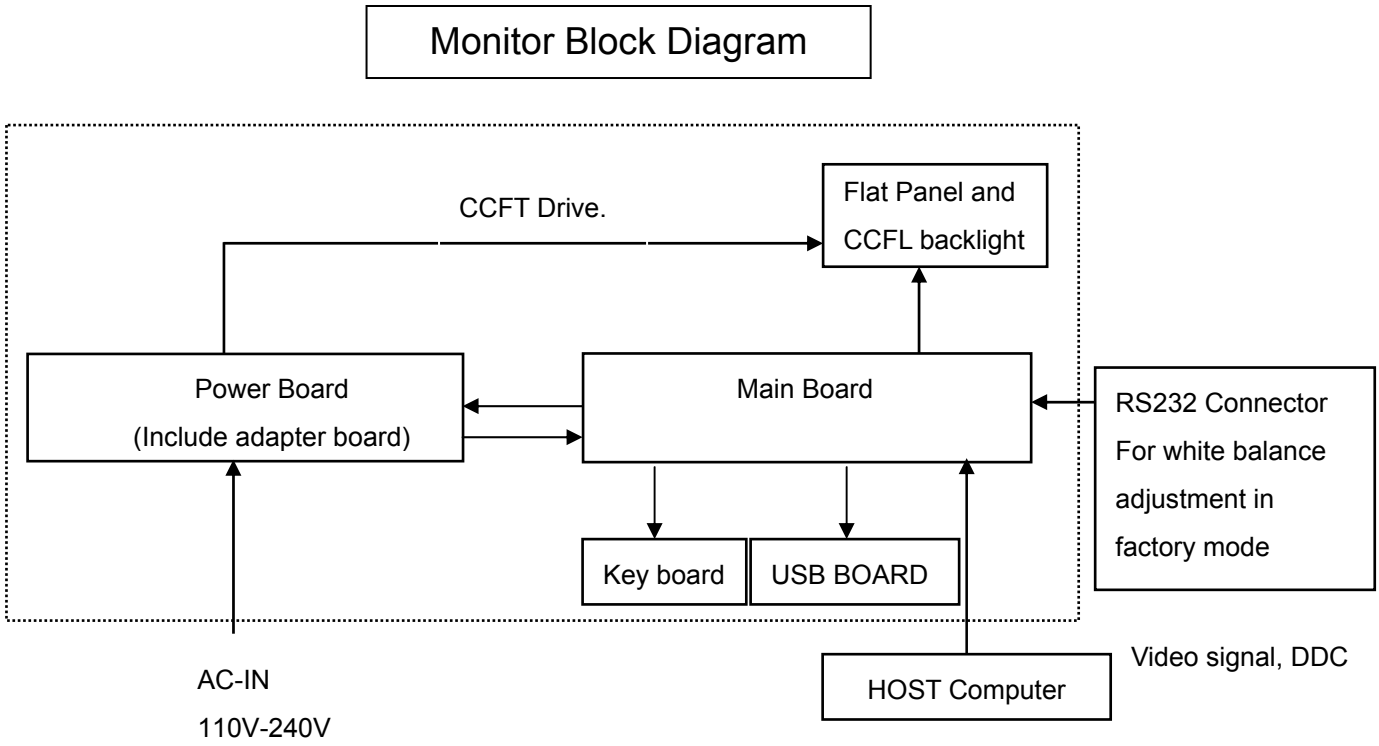

3. Operation Instructions

3.1 General Instructions

Press the power button to turn the monitor on or off. The other control buttons are located at front of the panel. By changing these settings, the picture can be adjusted to your personal performance.

- The power cord should be connected and insert to adaptor.
- Connect the video cable from the monitor to the computer VGA card.
- Press the power button to turn on the monitor, the power indicator will light up to Green.

3.2 Control Button

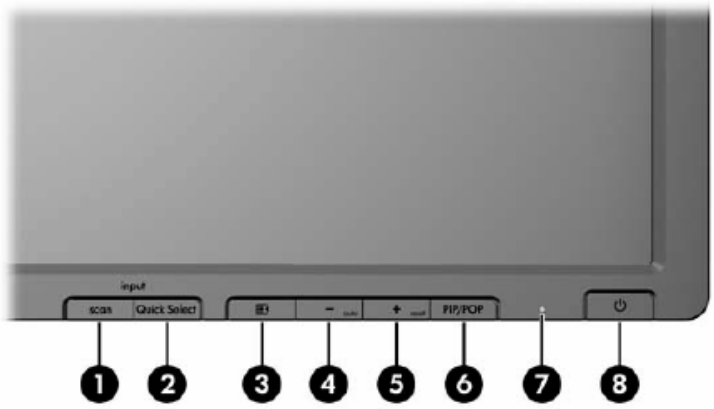

HP LP2475w Monitor Front Panel Controls

Control		Function
1	Input / Scan	Scans all video inputs for valid signals.
2	Input / Quick Select	Displays valid video input signals for quick selection.
3	Menu	Opens, selects or exits the OSD menu.
4	– (Minus)/Auto	• Navigates backward through the OSD menu and decreases adjustment levels. • When the OSD menu is inactive, activates the auto adjustment feature to optimize the screen image.
5	+ (Plus)/Reset	• Navigates forward through the OSD menu and increases adjustment levels. • When the OSD menu is inactive, resets the monitor settings to factory default settings.
6	PIP/POP	Turns Picture-In-Picture or Picture-Outside-Picture on or off. NOTE: The PIP/POP feature must be initially set up using the OSD menu. Select Video Input Control from the OSD menu to make your PIP/POP, input source, window size and screen position selections.
7	Power LED	Fully powered = Green. Sleep mode = Amber. Sleep Timer mode = Flashing Amber.
8	Power	Turns the monitor on or off.

Using the On-Screen Display Menu

Use the On-Screen Display (OSD) to adjust the screen image based on your viewing preferences. To access the OSD, do the following:

1. If the monitor is not already on, press the Power button to turn on the monitor.
2. To access the OSD Menu, press the Menu button on the monitor's front panel.

3. To navigate through the OSD Menu, press the + (Plus) button on the monitor's front panel to scroll up, or the – (Minus) button to scroll in reverse.
4. To select an item from the OSD Menu, use the + or – buttons to scroll to and highlight your selection, then press the Menu button to select that function.
5. Adjust the item using the + or – buttons on the front panel to adjust the scale.
6. After adjusting the function, select **Save and Return**, or **Cancel** if you don't want to save the setting, then select **Exit** from the Main Menu.

3.3 Adjust the Picture

The following table lists the On-Screen Display (OSD) menu selections and their functional descriptions.

After changing an OSD menu item, and if the menu screen has these options, you may choose to:

- **Cancel**—to return to the previous menu level.
- **Save and Return**—to save all changes and return to the OSD Main Menu screen. This Save and Return option is only active if you change a menu item.
- **Reset**—to change back to the previous setting.

Icon	Main Menu	Submenu	Description
	Brightness	Adjustable scale	Adjusts the brightness level of the screen. The factory default range is 90.
	Contrast	Adjustable scale	Adjusts the contrast level of the screen. The factory default range is 80.
	Image Control		Adjusts the screen image.
		Auto Adjustment	Automatically adjusts the screen image.
		Horizontal Position	Adjusts the position of the screen image left and right.
		Vertical Position	Adjusts the position of the screen image up and down.
		Custom Scaling	Selects the method on how displayed information on the monitor will be formatted. Select: • Fill to Screen—image fills the entire screen and may look distorted or elongated because of non-proportional scaling of height and width • Fill to Aspect Ratio—image is sized to fit the screen and maintains proportional image • One-to-one—disables video scaling, displays an image that is smaller in size than the monitor's capability and centers the image on the screen in the active viewing area
		Clock	Minimizes any vertical bars or strips visible on the screen background. Adjusting the Clock will also change the horizontal screen image.
		Clock Phase	Adjusts the focus of the display. This adjustment allows you to remove any horizontal noise and clear or sharpen the image of characters.
	Color		Selects the screen color. The factory default is 6500K or Custom Color, depending on the model.
		9300 K	Changes to slightly blueish white.
		6500 K	Changes to slightly reddish white.
		Custom Color	Selects and adjusts your own color scales: • R—sets your own red color levels • G—sets your own green color levels • B—sets your own blue color levels
		sRGB	Sets your screen colors to adapt to the color standards used in the image technology industry.
		Color Saturation	Adjustable scale for color intensity.
		Color Tint	Adjustable scale for color tint.
	Language		Selects the language in which the OSD menu is displayed. The factory default is English.

Icon	Main Menu	Submenu	Description
	Management		Selects the power management features of the monitor.
		Power Saver	Enables the power saving feature. Select: • On • Off The factory default is On.
		Power On Recall	Restores power to the monitor following an unexpected removal of power. Select: • On • Off The factory default is On.
		Mode Display	Displays the resolution, refresh rate and frequency information on the screen each time the OSD Main Menu is accessed. Select: • On • Off The factory default is On or Off, depending on the model.
		Power-On Status Display	Displays the operating status of the monitor each time the monitor is powered on. Select the location to display the status to: • Top • Middle • Bottom • Off The factory default is On or Off, depending on the model.
		DDC/CI Support	Allows the computer to control some OSD menu features such as brightness, contrast and color temperature. Set to: • On • Off The factory default is On.
		Bezel Power LED	Turns front panel Power LED on or off. Set to: • On • Off The factory default is On.
		Sleep Timer	Provides the timer adjustment menu options: • Set Current Time—sets the current time in hours and minutes • Set Sleep Time—sets the time you want to place the monitor in sleep mode

Icon	Main Menu	Submenu	Description
			• Set On Time—sets the time you want the monitor to wake up from sleep mode • Timer—sets the Sleep Timer feature On or Off. The default setting is Off • Sleep Now—immediately sets the monitor to enter sleep mode
	OSD Control		Adjusts the position of the OSD menu on the screen.
		Horizontal OSD Position	Changes the viewing position of the OSD menu to the left or right area of the screen. The factory default range is 50.
		Vertical OSD Position	Changes the viewing position of the OSD menu to the top or bottom area of the screen. The factory default range is 50.
		OSD Transparency	Adjust to view the background information through the OSD.
		OSD Timeout	Sets the time duration in seconds that the OSD is visible after the last button is pressed. The factory default is 30 seconds.
		OSD Rotation	Select landscape or portrait orientation.
	Video Input Control (LP2275w Model)		Controls the video input signal for the monitor.
		Switch Video Input	Selects the video input signal (DVI-I-1 Digital, DVI-I-1 Analog, or DisplayPort). Default is DVI-I-1 Digital.
		Auto-Switch Input	Turns the system's automatic video signal input to on or off. The factory default is On.
		Default Video Input	Selects the default or primary video input signal (DVI-I-1 Digital, DVI-I-1 Analog, or DisplayPort) when the monitor is connected to two active and valid video sources.
	Video Input Control (LP2475w Model)		Controls the video input signal for the monitor.
		Default Video Input	Forces one of the following as the default or primary video input signal: DVI-I-1 Digital, DVI-I-1 Analog, DVI-I-2 Digital, or DVI-I-2 Analog, DisplayPort, HDMI, S-Video. Composite, Component, or Auto-Detect. The factory default is Auto-Detect **NOTE:** The Default Video Input must be set to Auto-Detect to activate functionality of the Video Input Detect Mode and Input Switch Mode menu items.
		Video Input Detect Mode	**NOTE:** The Default Video Input must be set to Auto-Detect to activate functionality of the Video Input Detect Mode. Controls the operation of the front panel Scan button. Set to: • Automatic Input Scan—pressing the Scan button automatically scans through all video inputs for valid signals • Manual Input Scan—pressing the Scan button scans the video inputs one at a time for valid signals

Icon	Main Menu	Submenu	Description
			The factory default is Automatic Input Scan
ON·OFF		Input Switch Mode	**NOTE:** The Default Video Input must be set to Auto-Detect to activate functionality of the Input Switch Mode. Controls the monitor action when the current video input is removed or enters the power savings mode. Set to: • Input Auto-Switching OFF—the monitor takes no action when the displayed input is removed or enters the power savings mode • Input Auto-Switching ON—the monitor automatically seeks and displays an active input when the currently displayed video input is removed or enters the power mode The factory default is Off.
		PIP/POP Select	Selects the type of secondary window. The choices are: • PIP - Picture In Picture—secondary window is displayed as a small window within the primary window • POP - Picture Outside Picture—secondary window is displayed side by side with the primary window
		PIP/POP Source	Selects the input source for the PIP/POP window. The choices are Composite Video, S-Video, and Component Video. **NOTE:** All inputs are supported for the main window. however only Composite, S-Video, and Component inputs are supported for the secondary window.
		PIP Size	Selects the size of the PIP window. The choices are Small, Medium, and Large.
		PIP Position	Selects the position of the PIP window on the screen. The choices are Top Left, Top Right, Bottom Right, and Bottom Left.
	Information		Selects and displays important information about the monitor.
		Current Settings	Provides the current input video mode.
		Recommended Settings	Provides the recommended resolution mode and refresh rate for the monitor.
		Serial Number	Reports the serial number of the monitor. The serial number is needed if contacting HP technical support.
		Version	Reports the firmware version of the monitor.
		Backlight Hours	Reports the total hours of backlight operation.
	Factory Reset		Returns all OSD menu settings and DDC/CI controls to the factory default settings, except the Language.
	Exit		Exits the OSD menu screen.

4. Input/Output Specification

4.1 Input Signal Connector

Pin	Signal	Pin	Signal	Pin	Signal
1	TMDS Data 2 -	9	TMDS Data 1 -	17	TMDS Data 0 -
2	TMDS Data 2 +	10	TMDS Data 1 +	18	TMDS Data 0 +
3	TMDS Data 2 / 4 Shield	11	TMDS Data 1 / 3 Shield	19	TMDS Data 0 / 5 Shield
4	TMDS Data 4 -	12	TMDS Data 3 -	20	TMDS Data 5 -
5	TMDS Data 4 +	13	TMDS Data 3 +	21	TMDS Data 5 +
6	DDC Clock	14	+3.3/+5V Power (from PC)	22	TMDS Clock Shield
7	DDC Data	15	Ground (Return for +5V)	23	TMDS Clock +
8	No Connect	16	Hot Plug Detect (connect internally to pin-14)	24	TMDS Clock -

DVI-D digital connector layout

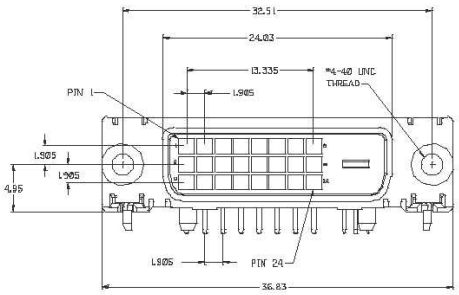

PIN	MNEMONIC	SIGNAL
1	ML Lane 0 (p)	Lane 0 +
2	GND	Ground
3	ML Lane 0 (n)	Lane 0 -
4	ML Lane 1 (p)	Lane 1 +
5	GND	Ground
6	ML Lane 1 (n)	Lane 1 -
7	ML Lane 2 (p)	Lane 2 +
8	GND	Ground
9	ML Lane 2 (n)	Lane 2 -
10	ML Lane 3 (p)	Lane 3 +
11	GND	Ground
12	ML Lane 3 (n)	Lane 3 -
13	GND	Ground
14	GND	Ground
15	AUX CH (p)	Aux Channel +
16	GND	Ground
17	AUX CH (n)	Aux Channel +
18	HPD	Hot Plug Detect
19	Return	Return
20	DP PWR	Source Power Out (to sink)

DISPLAY-PORT DIGITAL Source connector

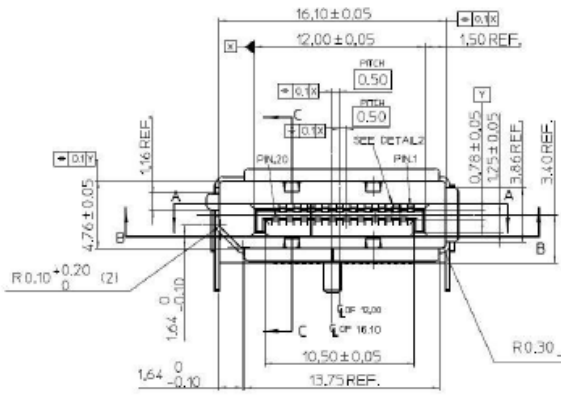

PIN	MNEMONIC	SIGNAL
1	ML Lane 3 (n)	Lane 3 -
2	GND	Ground
3	ML Lane 3 (p)	Lane 3 +
4	ML Lane 2 (n)	Lane 2 -
5	GND	Ground
6	ML Lane 2 (p)	Lane 2 +
7	ML Lane 1 (n)	Lane 1 -
8	GND	Ground
9	ML Lane 1 (p)	Lane 1 p
10	ML Lane 0 (n)	Lane 0 -
11	GND	Ground
12	ML Lane 0 (p)	Lane 0 +
13	GND	Ground
14	GND	Ground
15	AUX CH (p)	Aux Channel +
16	GND	Ground
17	AUX CH (n)	Aux Channel +
18	HPD	Hot Plug Detect
19	Return	Return
20	DP PWR	Source Power In

DISPLAY-PORT DIGITAL SINK connector

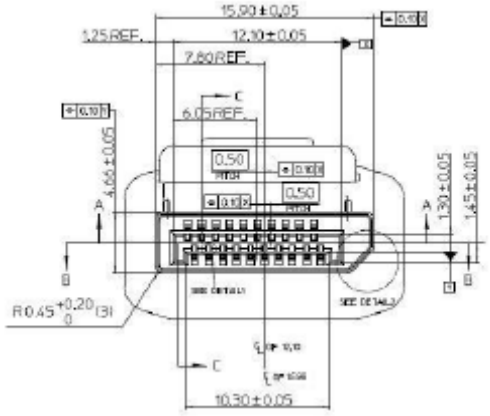

4.2 Factory Preset Display Modes

Preset	Pixel Format	Horz Freq (kHz)	Vert Freq (Hz)
1	640 × 480	31.47	59.94
2	640 × 480	37.50	70.00
3	720 × 400	31.47	70.08
4	800 × 600	37.88	60.32
5	800 × 600	46.88	75.00
6	832 × 624	49.72	74.55
7	1024 × 768	48.36	60.00
8	1024 × 768	60.02	75.03
9	1024 × 768	68.68	85.00
10	1152 × 870	68.68	75.06
11	1152 × 900	61.80	65.96
12	1280 × 768	47.396	60.00
13	1280 × 960	60.00	60.00
14	1280 × 1024	63.98	60.02
15	1280 × 1024	79.98	75.02
16	1280 × 1024	91.15	85.02
17	1600 x 1000	61.648	60.00
18	1600 x 1200	75.00	60.00
19	1600 x 1200	93.80	75.00
20	1680 x 1050	65.29	60.00
21	1920 x 1080	67.158	60.00
22	1920 x 1200	74.04	60.00
23	1920 x 1200	74.56	60.00

4.3 Power Supply Requirements

Parameter	Range
AC Input Voltage	90 to 265V
AC Input Frequency	45 to 63 Hz
Inrush Current	50A MAX AT 220VAC and 30A AT 120VAC
Leakage Current	5 mA MAX at 120VAC

5. Panel Specification

LM240WU4 is a Color Active Matrix Liquid Crystal Display with an integral Cold Cathode Fluorescent Lamp(CCFL) backlight system. The matrix employs a-Si Thin Film Transistor as the active element.It is a transmissive type display operating in the normally black mode. It has a 24inch diagonally measured active display area with WUXGA resolution (1200 vertical by 1920 horizontal pixel array)Each pixel is divided into Red, Green and Blue sub-pixels or dots which are arranged in vertical stripes. Gray scale or the brightness of the sub-pixel color is determined with a 8-bit gray scale signal for each dot,thus, presenting a palette of more than 16,7M(True) colors.

5.1 General Feature

Active Screen Size	24.1 inches(61.32cm) diagonal
Outline Dimension	546.4(H) x 352.0(V) x 40.3(D) mm(Typ.)
Pixel Pitch	0.270 mm x 0.270 mm
Pixel Format	1920 horiz. By 1200 vert. Pixels RGB stripes arrangement
Color Depth	8-bit, 16,777,216 colors
Luminance, White	400 cd/m^2 (Center 1 points)
Viewing Angle(CR>10)	View Angle Free (R/L 178(Typ.), U/D 178(Typ.))
Power Consumption	Total 71.82 Watt (Typ.) (7.02 Watt @V_{LCD}, 64.8 Watt@V_{DDB})
Weight	2790 g (typ.)
Display Operating Mode	Transmissive mode, normally black
Surface Treatment	Hard coating(3H), Anti-glare treatment of the front polarizer

Absolute Maximum Ratings

Parameter	Symbol	Values		Units
		Min	Max	
Power Input Voltage	V_{LCD}	-0.3	14	Vdc
Operating Temperature	T_{OP}	0	50	°C
Storage Temperature	T_{ST}	-20	60	°C
Operating Ambient Humidity	H_{OP}	10	90	%RH
Storage Humidity	H_{ST}	10	90	%RH

5.2 Optical Characteristics

(Ta=25 °C, VLCD=12.0V, fV=60Hz Dclk=154MHz, VBR=3.3V)

Parameter		Symbol	Values			Units
			Min	Typ	Max	
Contrast Ratio		CR	700	1000		
Surface Luminance, white		L_{WH}	320	400		cd/m^2
Luminance Variation		δ_{WHITE}	75			%
Response Time	Rise Time	Tr_R	-	6.0	12	ms
	Decay Time	Tr_D	-	7.0	12	ms
	Gray to Gray	T_{GTG_AVR}	-	5	-	ms
		T_{GTG_MAX}	-	-	12	ms
Color Coordinates [CIE1931]	RED	Rx	Typ -0.03	0.680	Typ +0.03	
		Ry		0.310		
	GREEN	Gx		0.206		
		Gy		0.693		
	BLUE	Bx		0.151		
		By		0.055		
	WHITE	Wx		0.313		
		Wy		0.329		
Color Shift	Horizontal	θ_{CST_H}	-	178	-	Degree
	Vertical	θ_{CST_V}	-	178	-	
Viewing Angle (CR>10)						
General	Horizontal	θ_H	170	178	-	Degree
	Vertical	θ_V	170	178	-	
Effective	Horizontal	θ_{GMA_H}		178	-	Degree
	Vertical	θ_{GMA_V}		178	-	
Gray Scale				2.2		

6. Block diagram

6. 1 Software Flow Chart

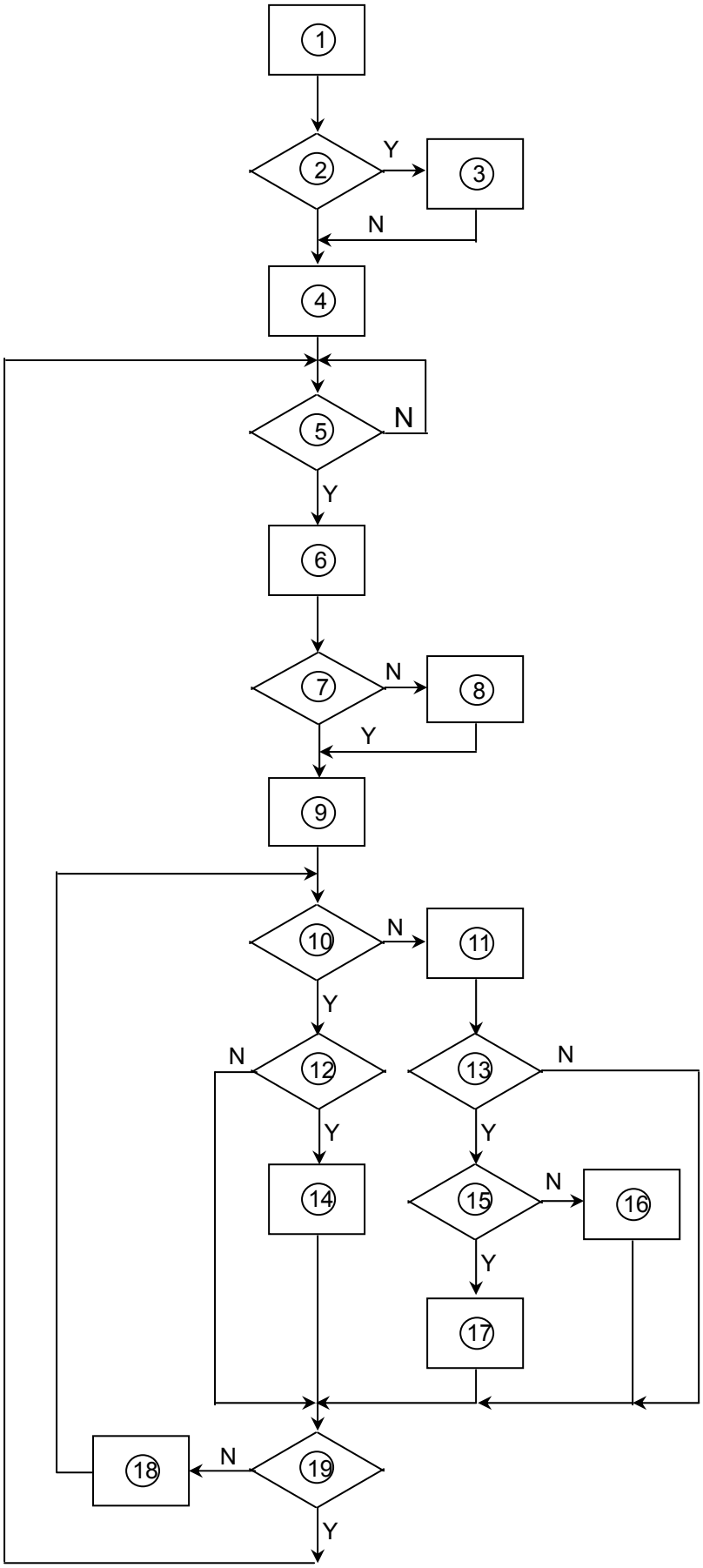

REMARK:

1) MCU initialize.
2) Is the EEprom blank?
3) Program the EEprom by default values.
4) Get the PWM value of brightness from EEprom.
5) Is the power key pressed?
6) Clear all global flags.
7) Are the AUTO and SELECT keys pressed?
8) Enter factory mode.
9) Save the power key status into EEprom. Turn on the LED and set it to green color. Scalar initialize.
10) In standby mode?
11) Update the lifetime of back light.
12) Check the analog port, are they’re any signals coming?
13) Does the scalar send out an interrupt request?
14) Wake up the scalar.
15) Are there any signals coming from analog port?
16) Display "No connection Check Signal Cable" message. And go into standby mode after the message disappear.
17) Program the scalar to be able to show the coming mode.
18) Process the OSD display.
19) Read the keyboard. Is the power key pressed?

6.2 Electrical Block Diagram

6.2.1 Scalar Board

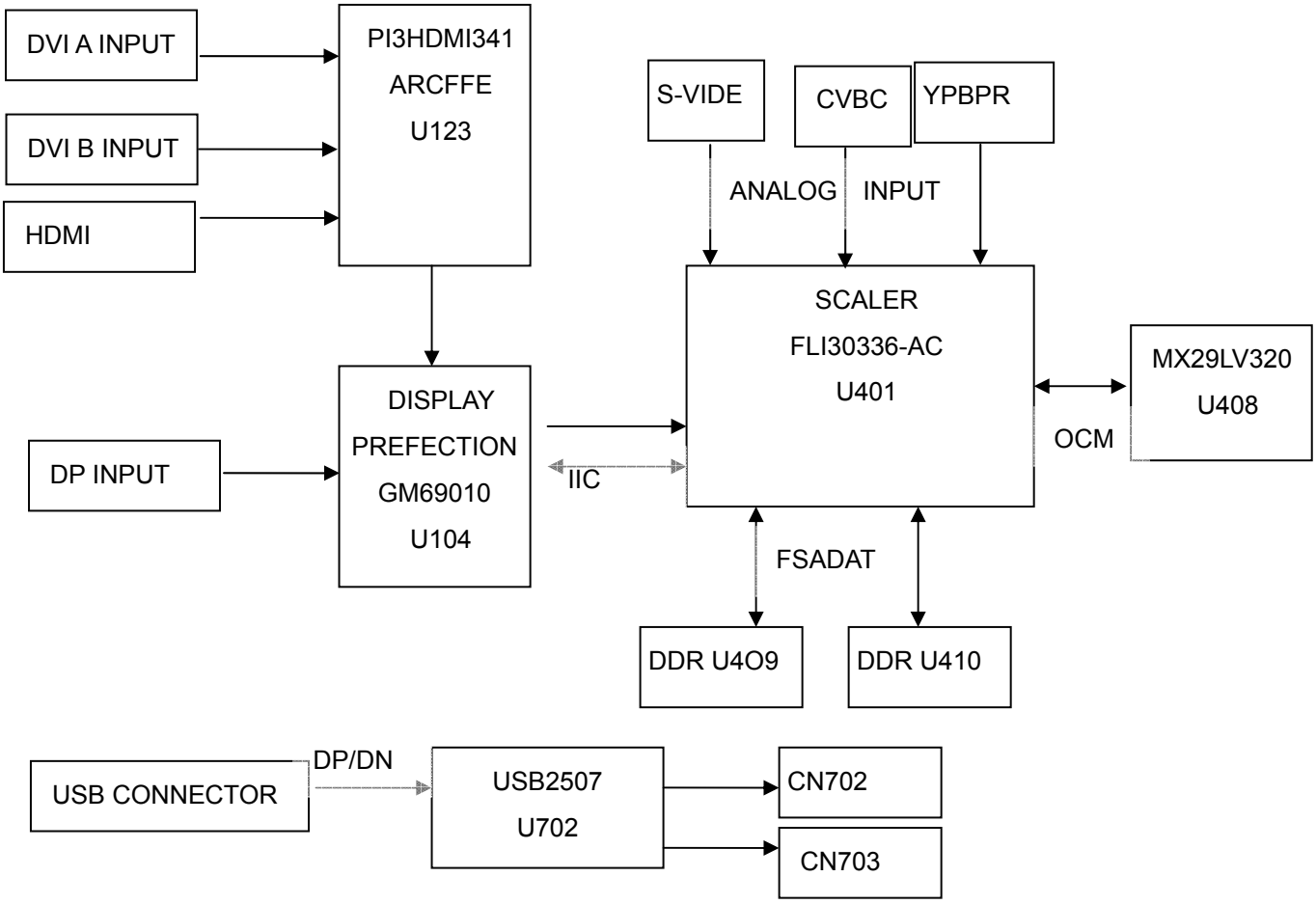

6.2.2 Inverter / Power Board

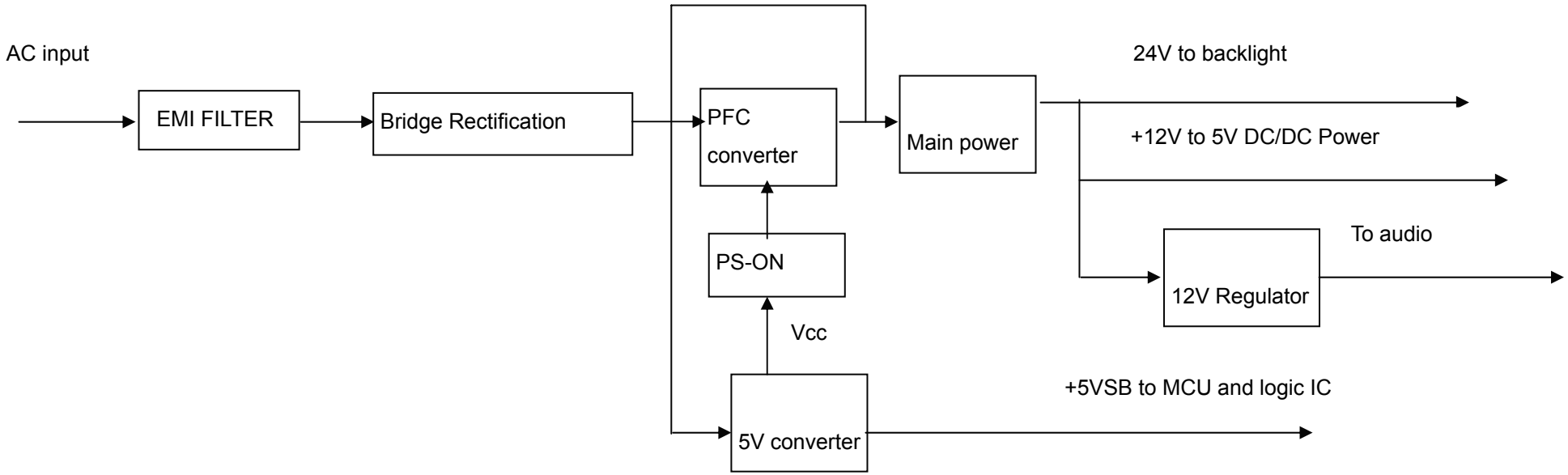

7. Schematic

7.1 Main Board

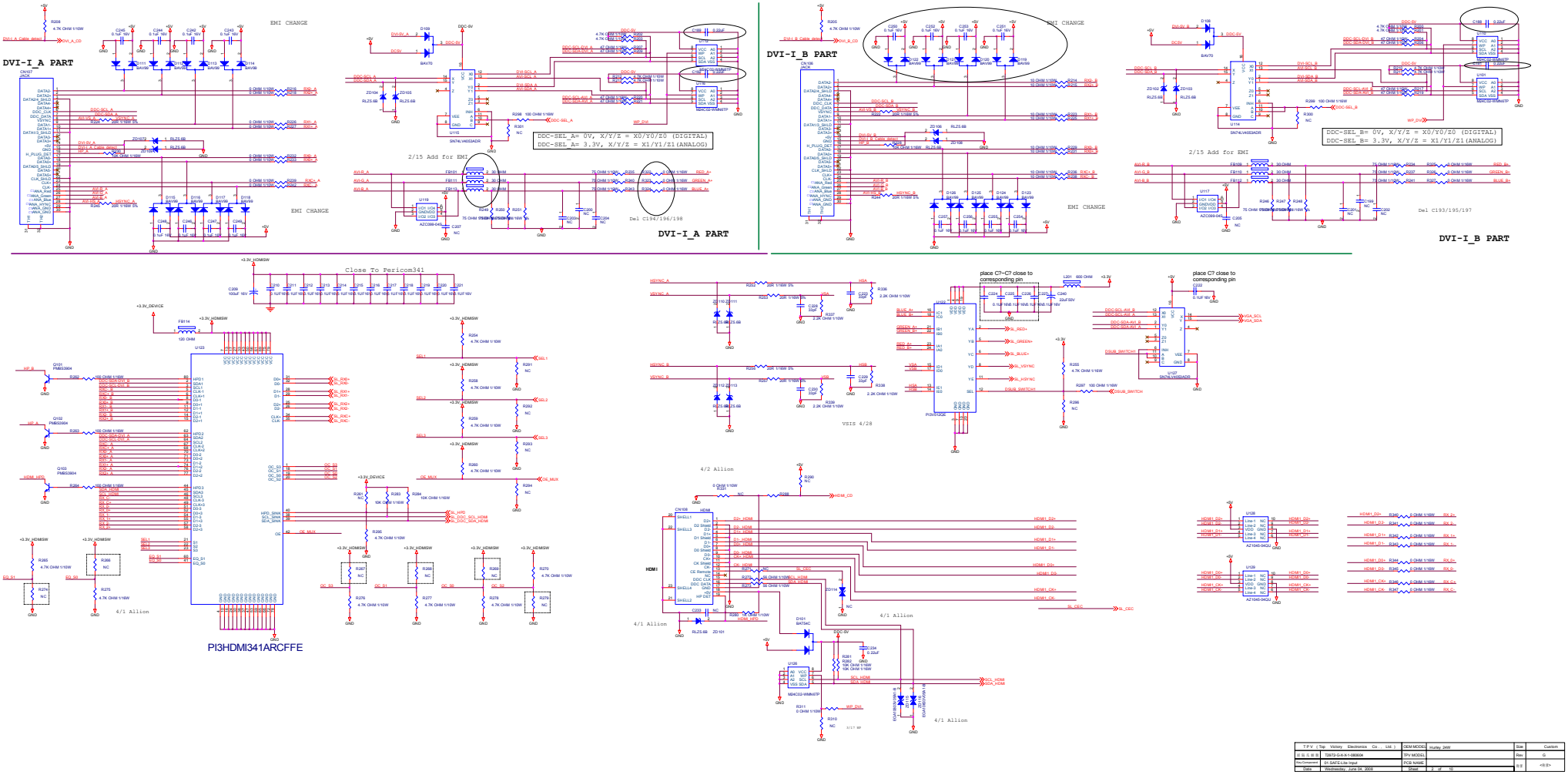

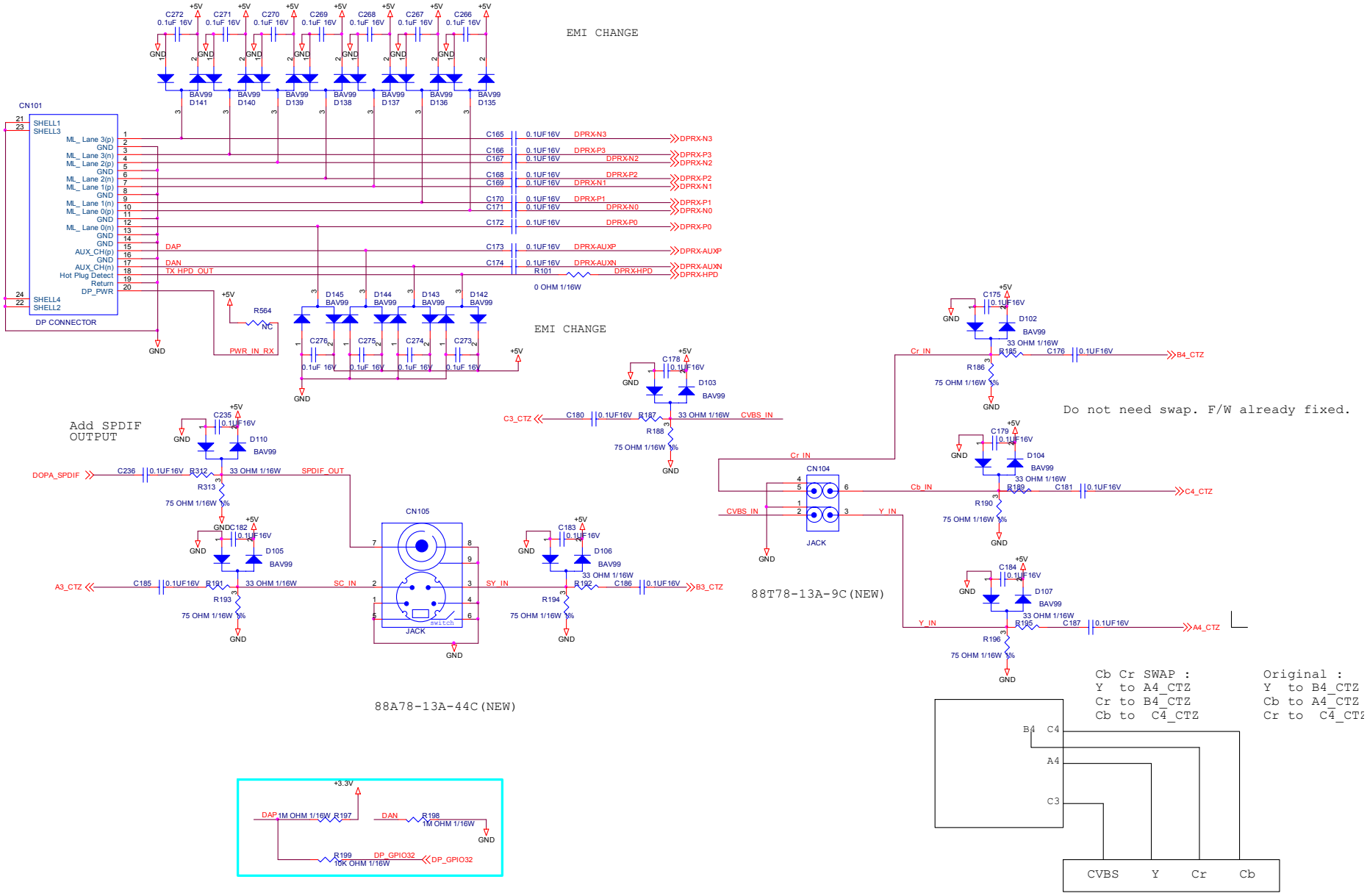

T P V (Top Victory Electronics Co., Ltd.)		OEM MODEL	Hurley 24W	Size	Custom
紙隔瓜銅股	T2972-G-X-X-1-080604	TPV MODEL		Rev	G
Key Component	01.COVER	PCB NAME		称茎	<称茎>
Date	Wednesday, June 04, 2008	Sheet	3 of 10		

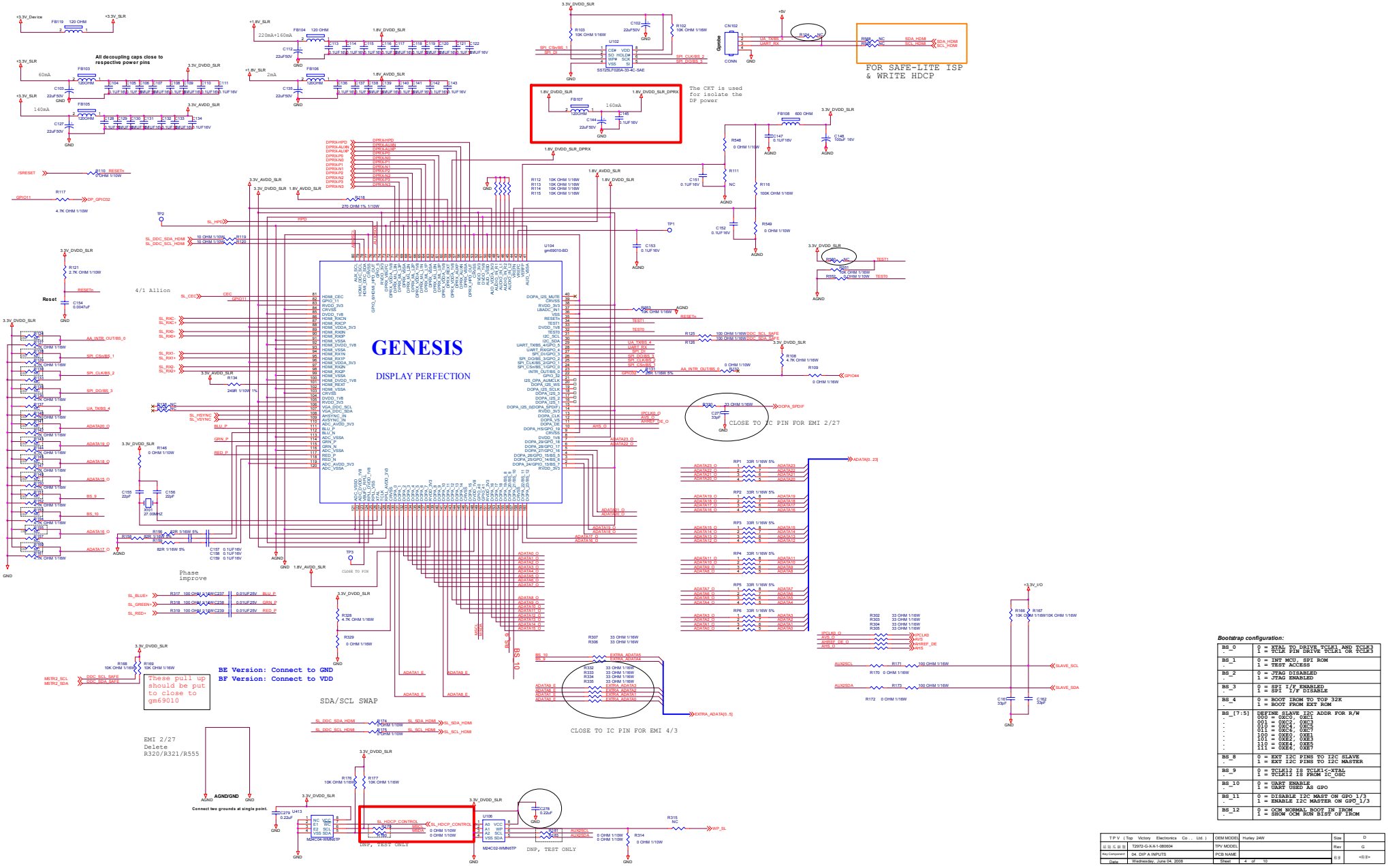
GENESIS
DISPLAY PERFECTION
All decoupling caps close to respective power pins
FOR SAFE-LITE ISP & WRITE HDCP
The CKT is used for isolate the DP power
4/1 Allion
Phase improve
CLOSE TO IC PIN FOR EMI 2/27
CLOSE TO IC PIN FOR EMI 4/3
SDA/SCL SWAP
BE Version: Connect to GND
BF Version: Connect to VDD
These pull up should be put to close to gm69010
EMI 2/27 Delete R320/R321/R555
AGND/GND
Connect two grounds at single point.
DNP, TEST ONLY
Bootstrap configuration:
BS_0 0 = XTAL TO DRIVE TCLK1 AND TCLK3 1 = TCLK PIN DRIVE TCLK1 OR TCLK3
BS_1 0 = INF MCU, SPI ROM 1 = TEST ACCESS
BS_2 0 = JTAG DISABLED 1 = JTAG ENABLED
BS_3 0 = SPI I/F ENABLED 1 = SPI I/F DISABLE
BS_4 0 = BOOT IROM TO TOP 32K 1 = BOOT FROM EXT ROM
BS_[7:5] DEFINE SLAVE I2C ADDR FOR R/W 000 = 0XC0, 0XC1 001 = 0XC2, 0XC3 010 = 0XC4, 0XC5 011 = 0XC6, 0XC7 100 = 0XE0, 0XE1 101 = 0XE2, 0XE3 110 = 0XE4, 0XE5 111 = 0XE6, 0XE7
BS_8 0 = EXT I2C PINS TO I2C SLAVE 1 = EXT I2C PINS TO I2C MASTER
BS_9 0 = TCLK12 IS TCLK1<-XTAL 1 = TCLK12 IS FROM IC_OSC
BS_10 0 = UART ENABLE 1 = UART USED AS GPO
BS_11 0 = DISABLE I2C MAST ON GPO_1/3 1 = ENABLE I2C MASTER ON GPO_1/3
BS_12 0 = OCM NORMAL BOOT IN IROM 1 = SHOW OCM RUN BIST OF IROM
T P V (Top Victory Electronics Co., Ltd.)
OEM MODEL: Harley 24W
PJV MODEL: T2972-G-X-X-1-060604
PCB NAME: 04. DIP A INPUTS
Wednesday, June 04, 2008
Sheet 4 of 10
Size D
Rev G

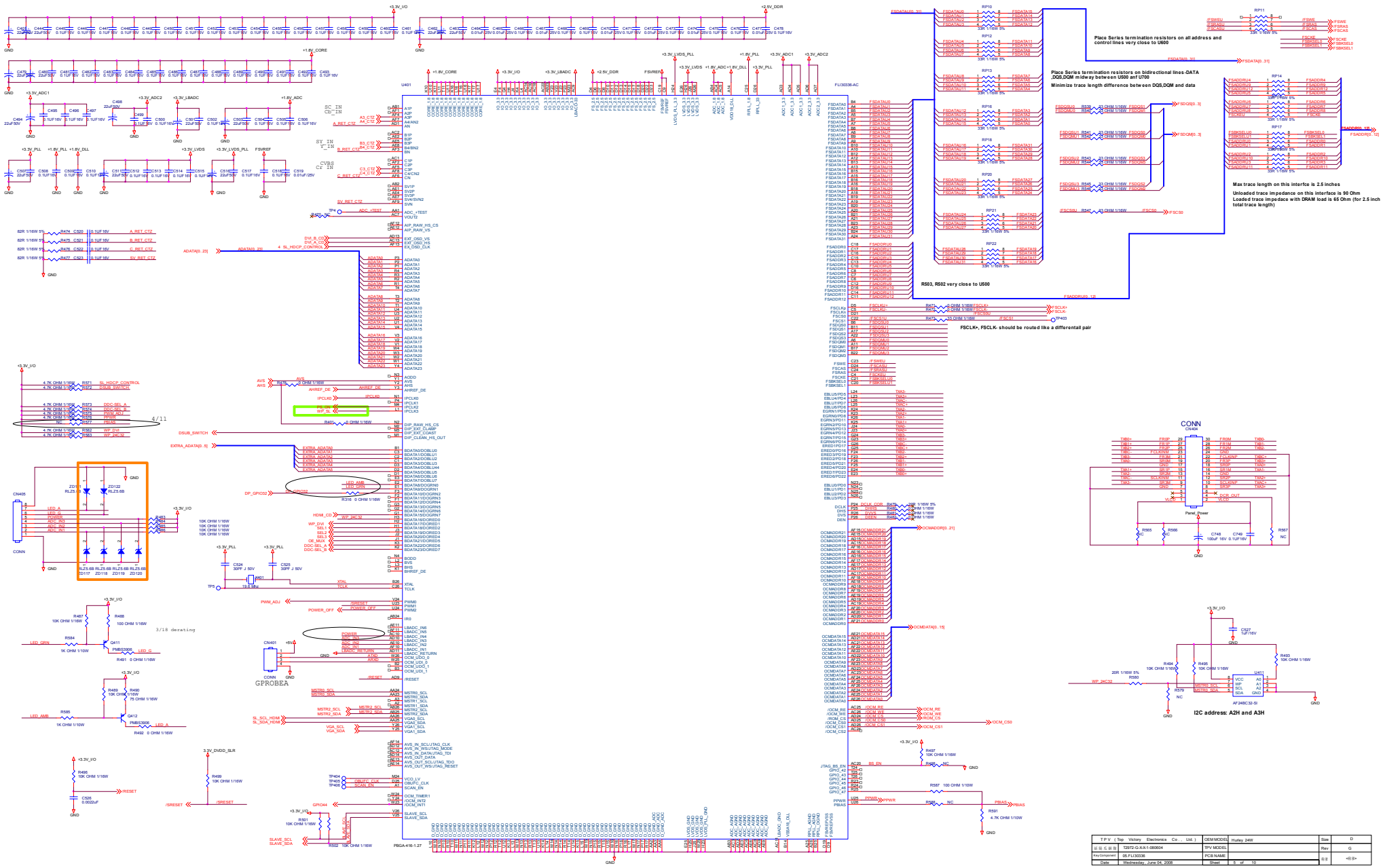
Place Series termination resistors on all address and control lines very close to U600
Place Series termination resistors on bidirectional lines-DATA ,DQS,DQM midway between U500 anf U700
Minimize trace length difference between DQS,DQM and data
Max trace length on this interfce is 2.5 inches
Unloaded trace impedance on this interface is 90 Ohm
Loaded trace impedace with DRAM load is 65 Ohm (for 2.5 inch total trace length)
R503, R502 very close to U500
FSCLK+, FSCLK- should be routed like a differentail pair
CONN
I2C address: A2H and A3H
GPROBEA
3/18 derating
4/11
TPV (Top Victory Electronics Co., Ltd.)
OEM MODEL Hurley 24W
Size D
TPV MODEL
Rev G
Key Component 05.FLI30336
PCB NAME
Date Wednesday, June 04, 2008
Sheet 5 of 10

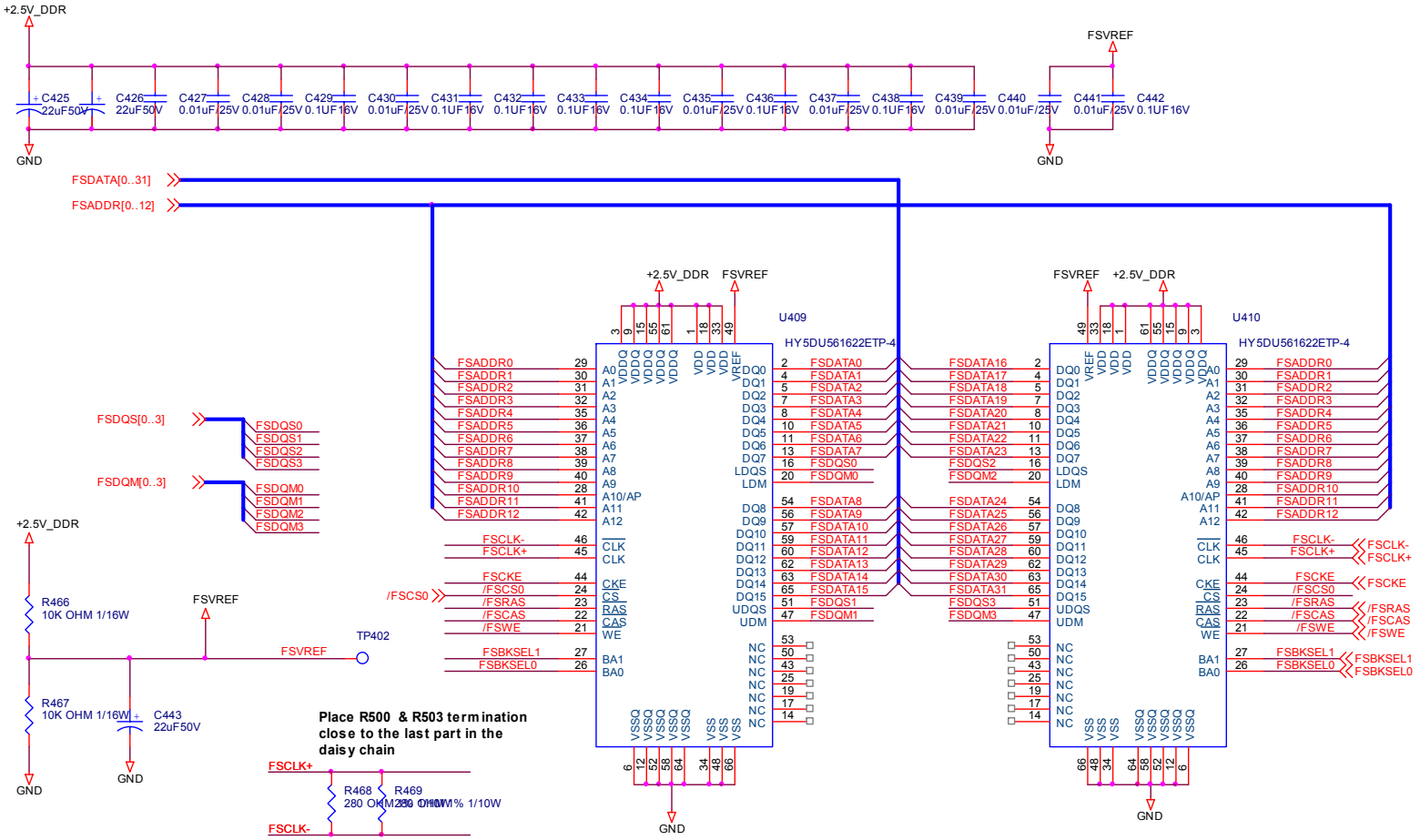

T P V （Top Victory Electronics Co., Ltd.）		OEM MODEL	Hurley 24W	Size	B
結 隔 瓜 鋼 腹	T2972-G-X-X-1-080604	TPV MODEL		Rev	G
Key Component	06.Frame Store	PCB NAME		称爹	<称爹>
Date	Wednesday, June 04, 2008	Sheet	6 of 10		

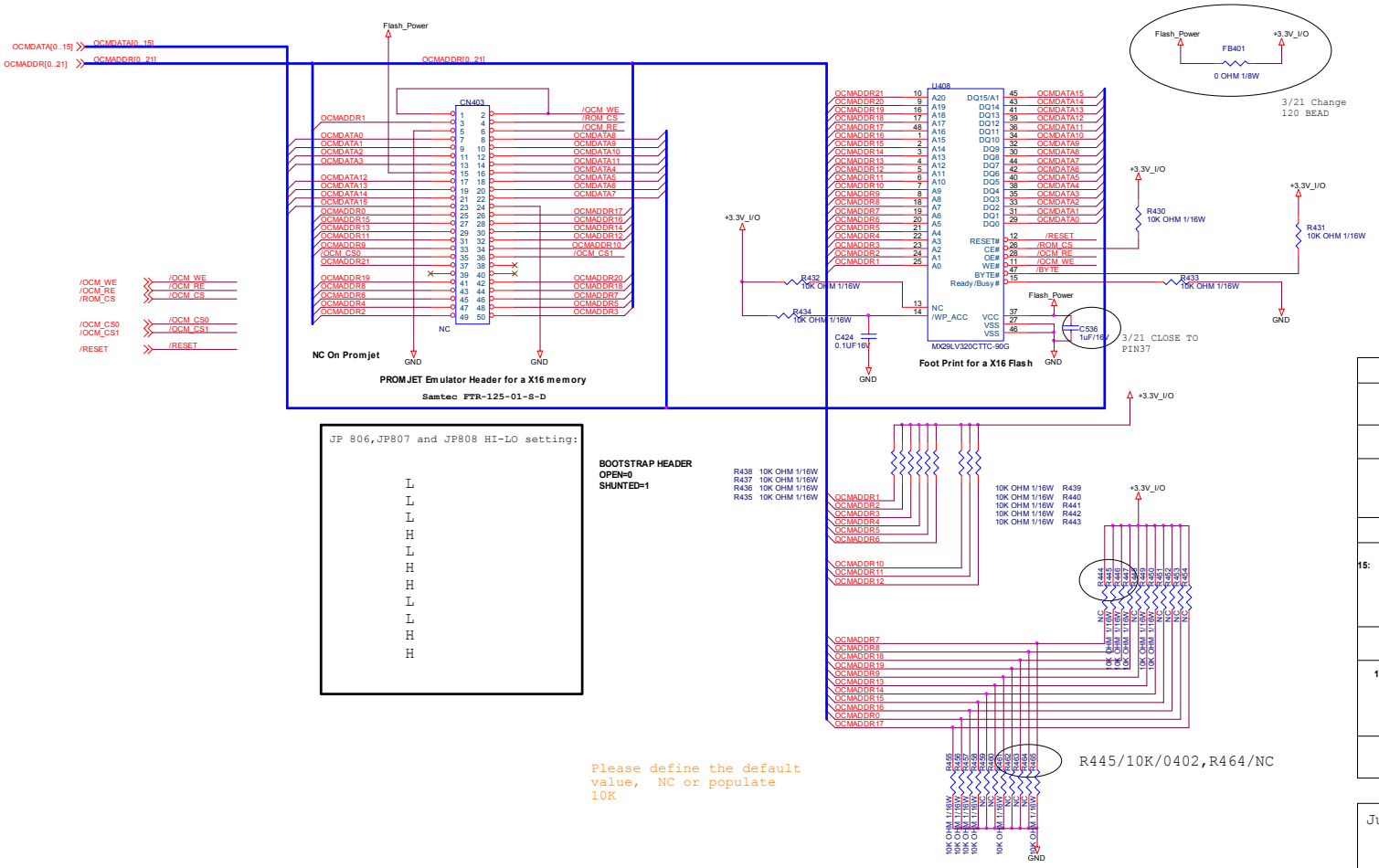

6:0:	I2C to JTAG bridge address or General use
7	0 = After power on Reset, continue the boot up using internal ROM
	1 = Stay in IntRom without checking any DDC2Bi channel. (ForceDebug)
8	0 = Use DDCB2Bi Channel #0
	1 = Use DDCB2Bi Channel #1
9	0 = Do not perform power up code CRC check
	1 = Perform power up code CRC check. If the CRC check did not match the one stored in the XROM Configure block, blink a led at a rate of 2 second per blink
10-12	For General Purpose use
15: 14: 13:	000 = 20-bit address, 8-bit EXT I/F 001 = 24-bit address, 8-bit EXT I/F 010 = 20-bit address, 16-bit EXT I/F 011 = 24-bit address, 16-bit EXT I/F 1XX = OCM disabled, external parallel control bus (testbench)
16:	Open (Internal ROM on, and mapped to top 32K) Close (Internal ROM off-boot from ext ROM)
18: 17:	00 = I2C to JTAG Bridge disabled 01 = ICD_SDA on VGA0_SDA, ICD_SCL on VGA0-SCL 10 = ICD_SDA on VGA1_SDA, ICD_SCL on VGA1_SCL 11 = I2C to JTAG bridge disabled, 5 JTAG signals mapped to AVS Pins
19:	Open/0 (External Oscillator on TCLK pin) Close/1 (XTAL and Internal Oscillator)

Jumper Note: JP 801, JP805, JP802, JP803 are linking 1&2.

JP 804 do not care

TPV (Top Victory Electronics Co., Ltd.)		OEM MODEL	Hurley 24W	Size	Custom
話 隔 瓜 旗 腹	T2972-G-X-X-1-080604	TPV MODEL		Rev	G
Key Component	07. Memory I/F	PCB NAME		称爹	<称爹>
Date	Wednesday, June 04, 2008	Sheet	7 of 10		

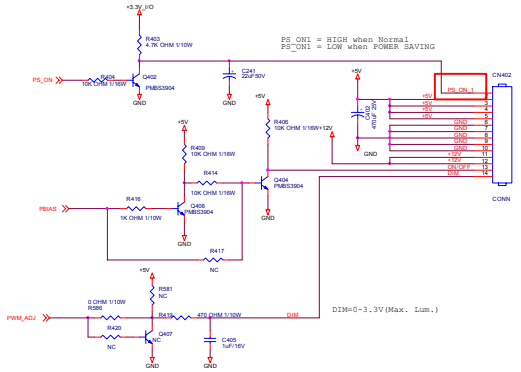

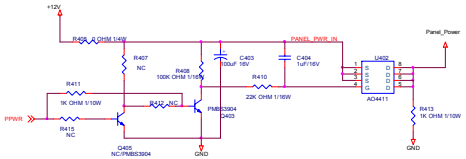

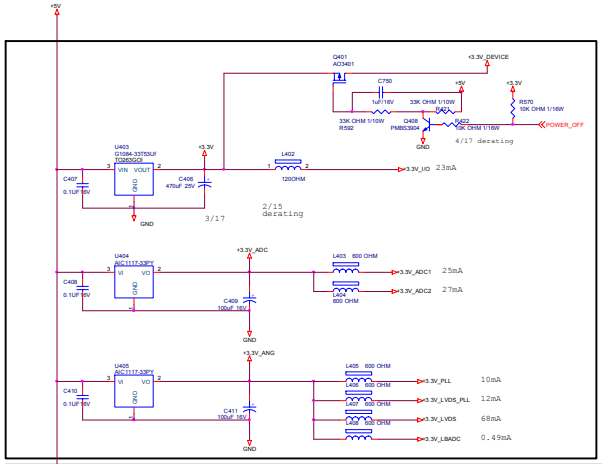

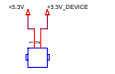

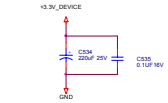

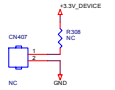

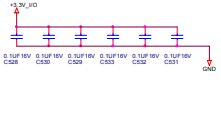

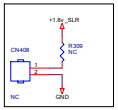

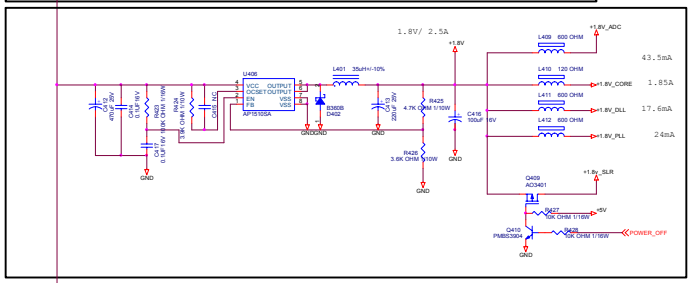

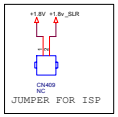

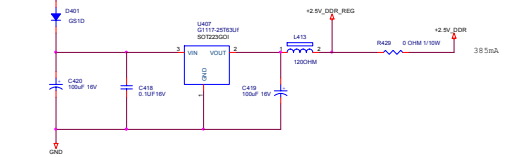

T P V (Top Victory Electronics Co ., Ltd.)	OEM MODEL	Hurley 24W	Size D
版面名稱	TPV MODEL	T2972-G-X-X-1-080604	Rev G
Key Component	PCB NAME	08. Power	
Date	Wednesday, June 04, 2008	Sheet 8 of 10	

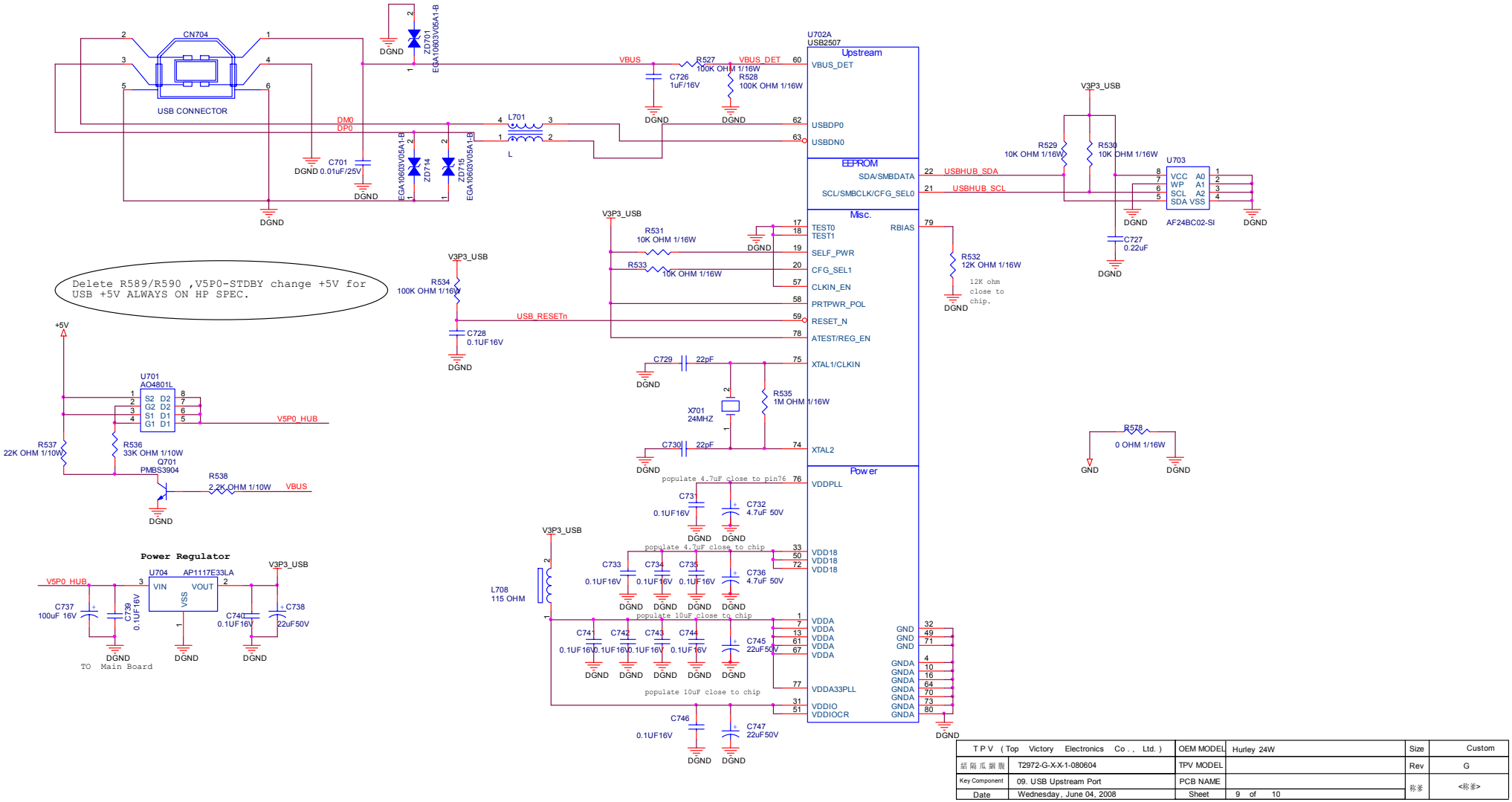

T P V （Top Victory Electronics Co., Ltd.）		OEM MODEL	Hurley 24W	Size	Custom
結陽瓜鍋殿	T2972-G-X-X-1-080604	TPV MODEL		Rev	G
Key Component	09. USB Upstream Port	PCB NAME		称爹	<称爹>
Date	Wednesday, June 04, 2008	Sheet	9 of 10		

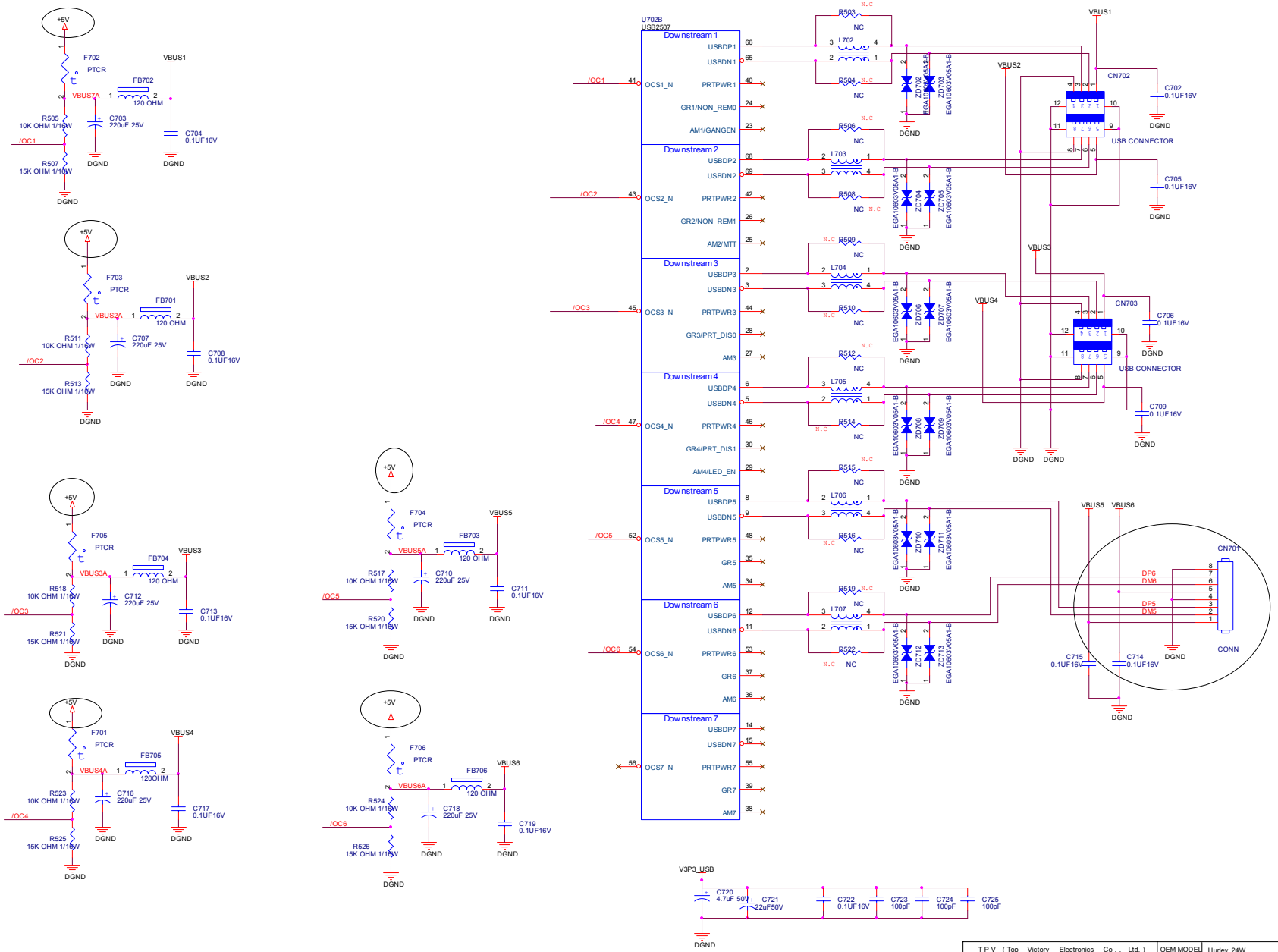

T P V (Top Victory Electronics Co., Ltd.)		OEM MODEL	Hurley 24W	Size	C
結隔瓜鋼腹	T2972-G-X-X-1-080604	TPV MODEL		Rev	G
Key Component	10. USB HUB Downstream	PCB NAME		移爹	<移爹>
Date	Wednesday, June 04, 2008	Sheet	10 of 10		

7.2 Power Board

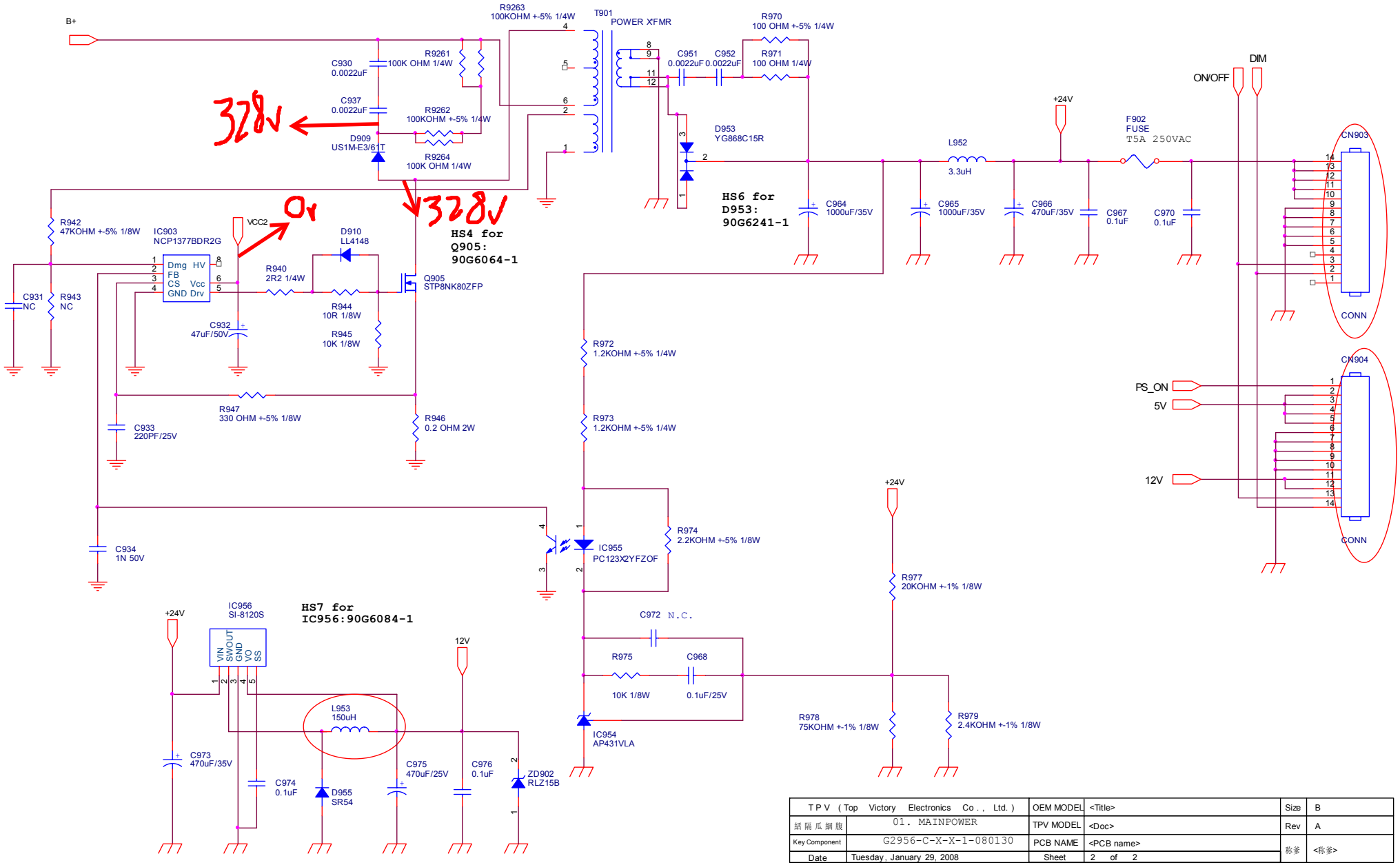

TPV (Top Victory Electronics Co., Ltd.)		OEM MODEL	<Title>	Size	B
紙隔瓜網腹	01. MAINPOWER	TPV MODEL	<Doc>	Rev	A
Key Component	G2956-C-X-X-1-080130	PCB NAME	<PCB name>	称爹	<称爹>
Date	Tuesday, January 29, 2008	Sheet	2 of 2		

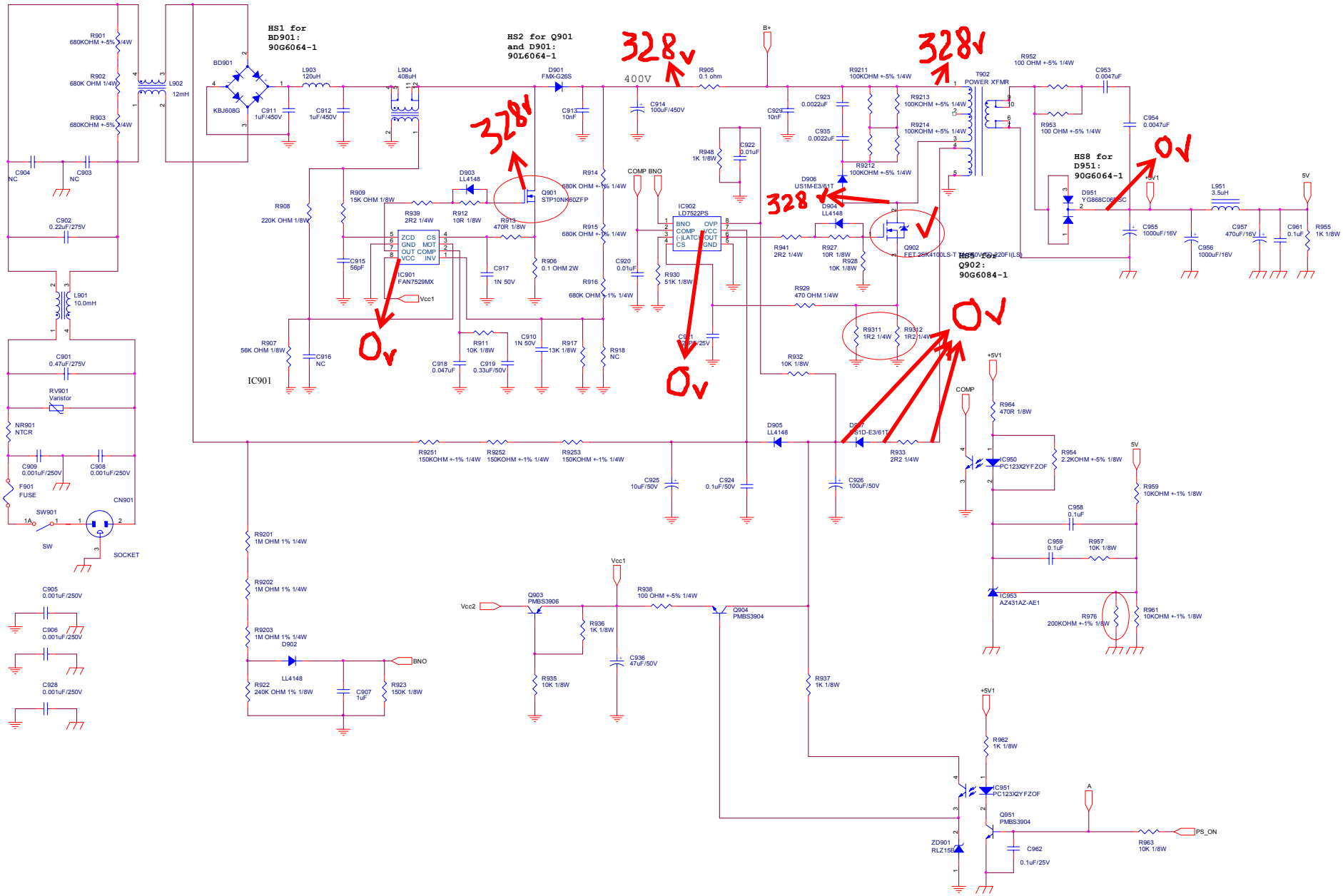

TPV (Top Victory Electronics Co., Ltd.)		OEM MODEL	<Title>	Size	C
話隔瓜鋼	02. PFC	TPV MODEL	<Doc>	Rev	A
Key Component	G2956-C-X-X-1-080130	PCB NAME	<PCB name>	称爹	<称爹>
Date	Tuesday, January 29, 2008	Sheet	1 of 2		

7.3 Key Board

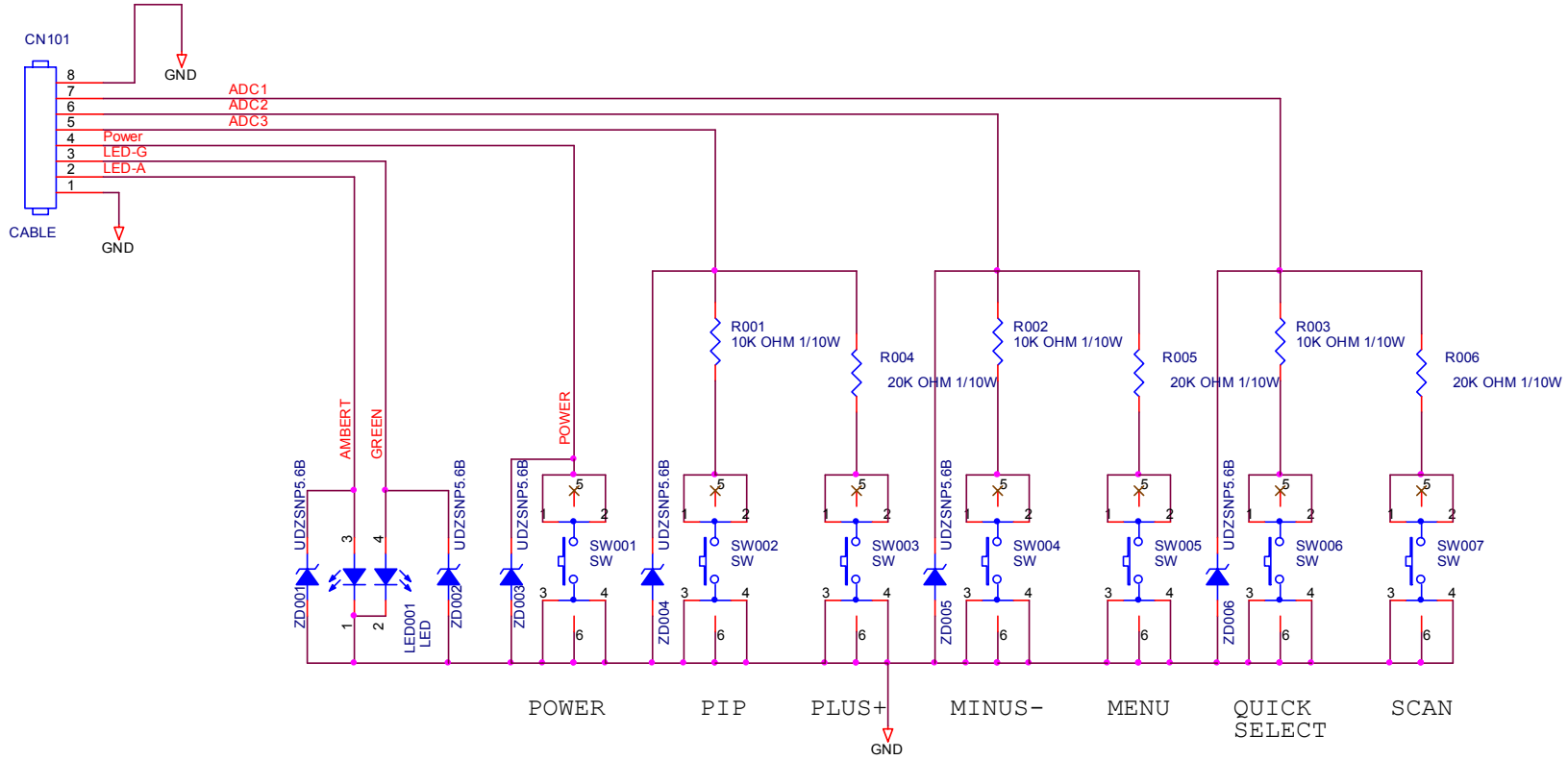

OSD KEY LOCATION

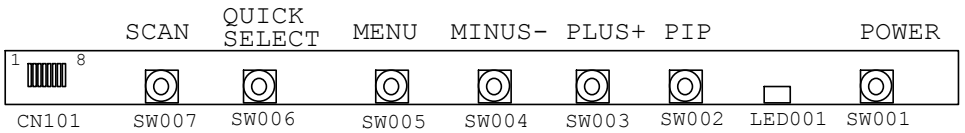

I/P VOLT	SW007 SW006	SW005 SW004	SW003 SW002
ADC1	1.65V 1.1v		
ADC2		1.65V 1.1V	
ADC3			1.65V 1.1V

T P V (Top Victory Electronics Co . , Ltd.)		OEM MODEL	HP LP2475	Size	Custom
結 隔 瓜 網 腹	T2958-D-X-X-1-080304	TPV MODEL	<Doc>	Rev	D
Key Component	02.Key Board	PCB NAME	T2958-D	称爹	<称爹>
Date	Monday , March 10, 2008	Sheet	2 of 2		

8. PCB Layout

8.1 Main Board

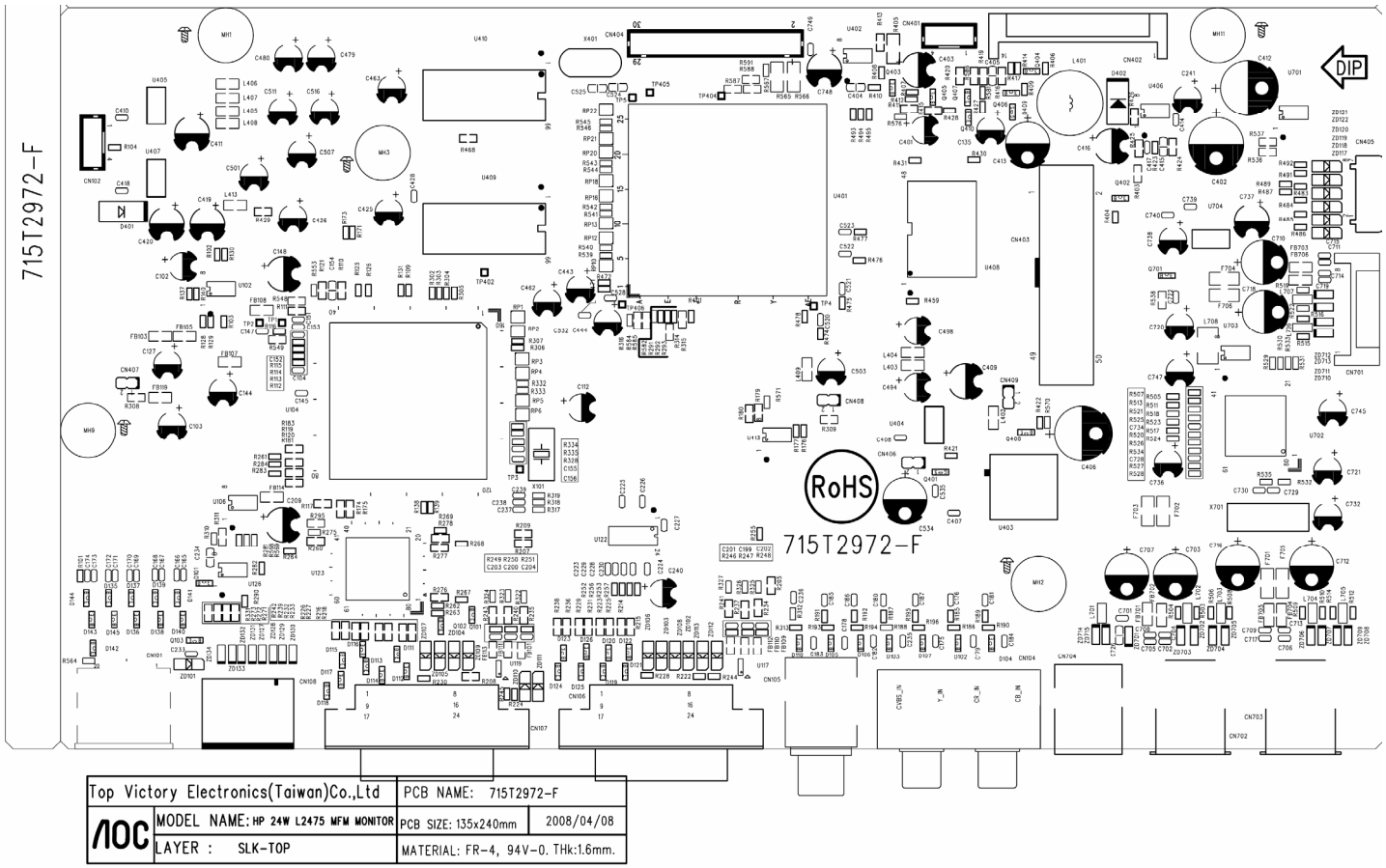

Top Victory Electronics(Taiwan)Co.,Ltd		PCB NAME: 715T2972-F	
AOC	MODEL NAME: HP 24W L2475 MFM MONITOR	PCB SIZE: 135x240mm	2008/04/08
	LAYER : SLK-TOP	MATERIAL: FR-4, 94V-0. THk:1.6mm.	

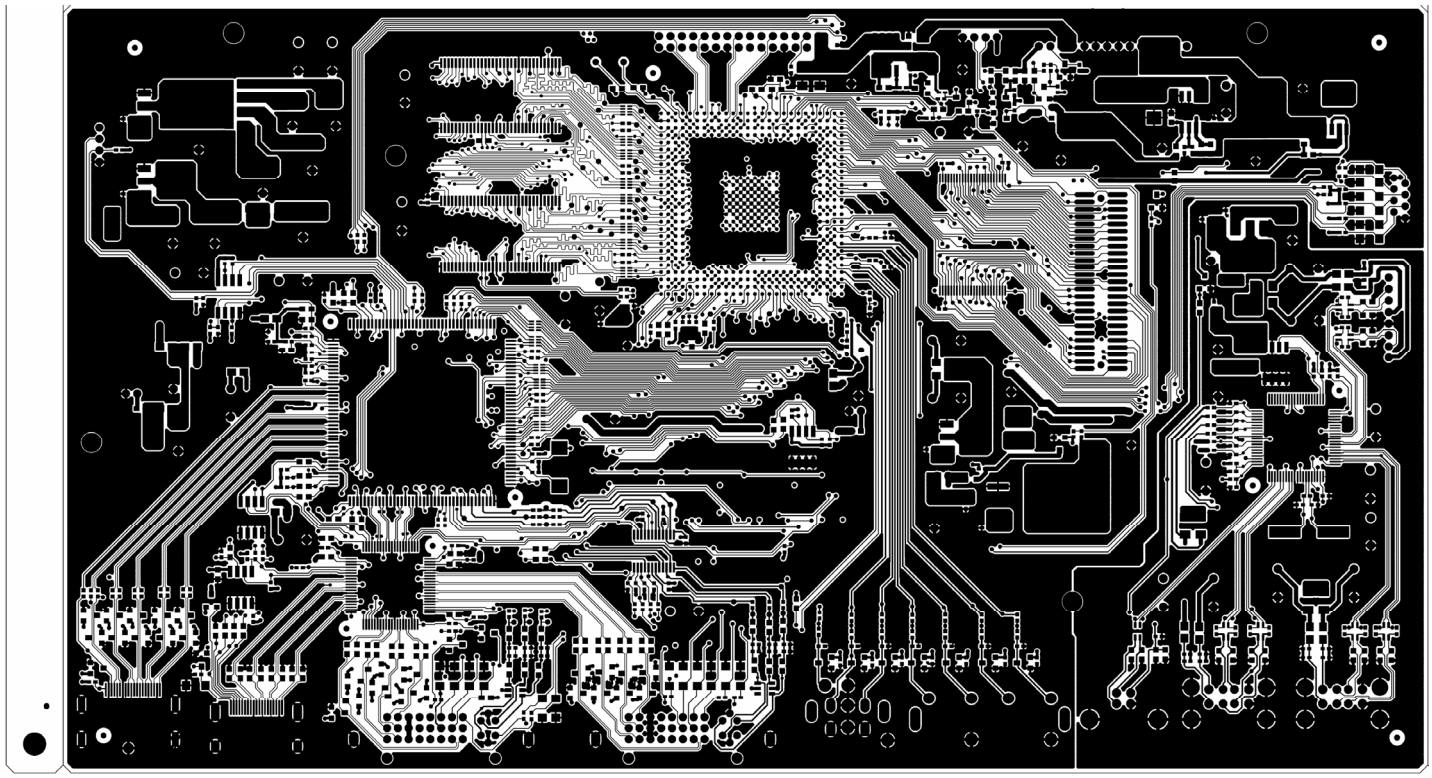

8.2 Power Board

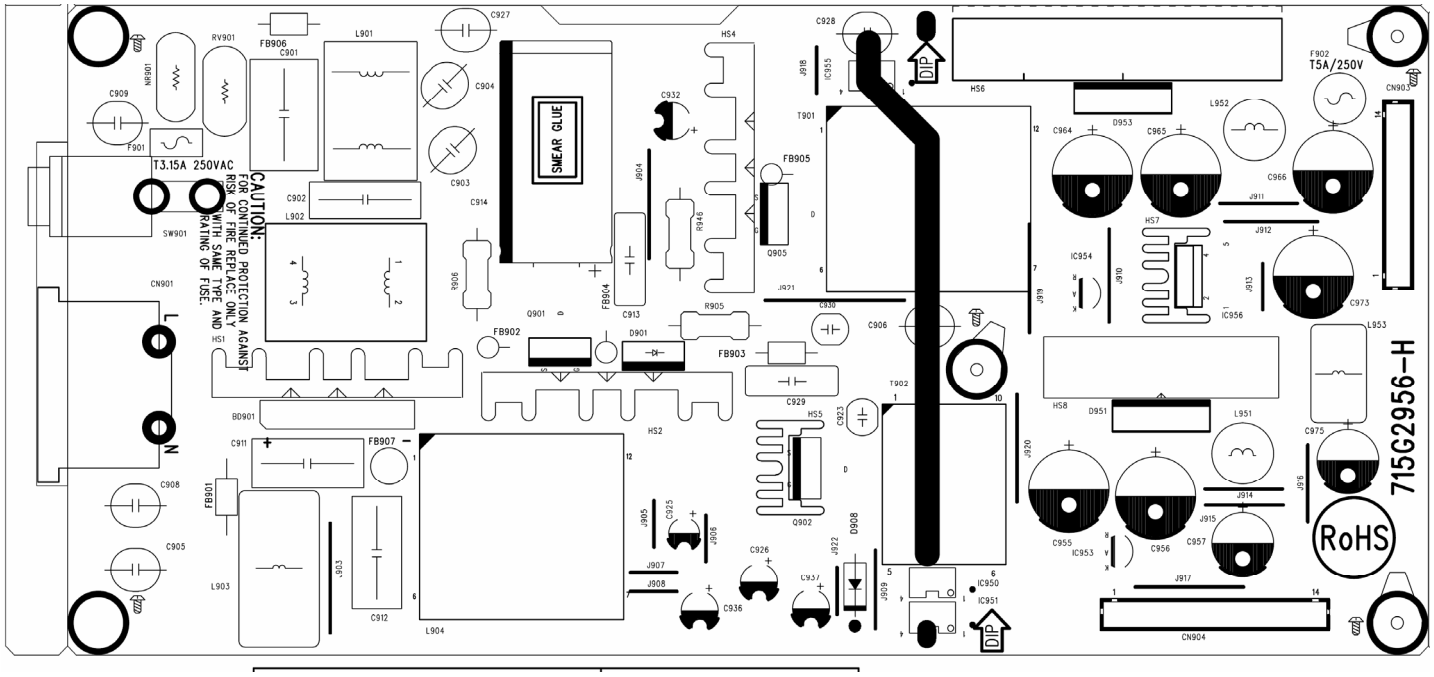

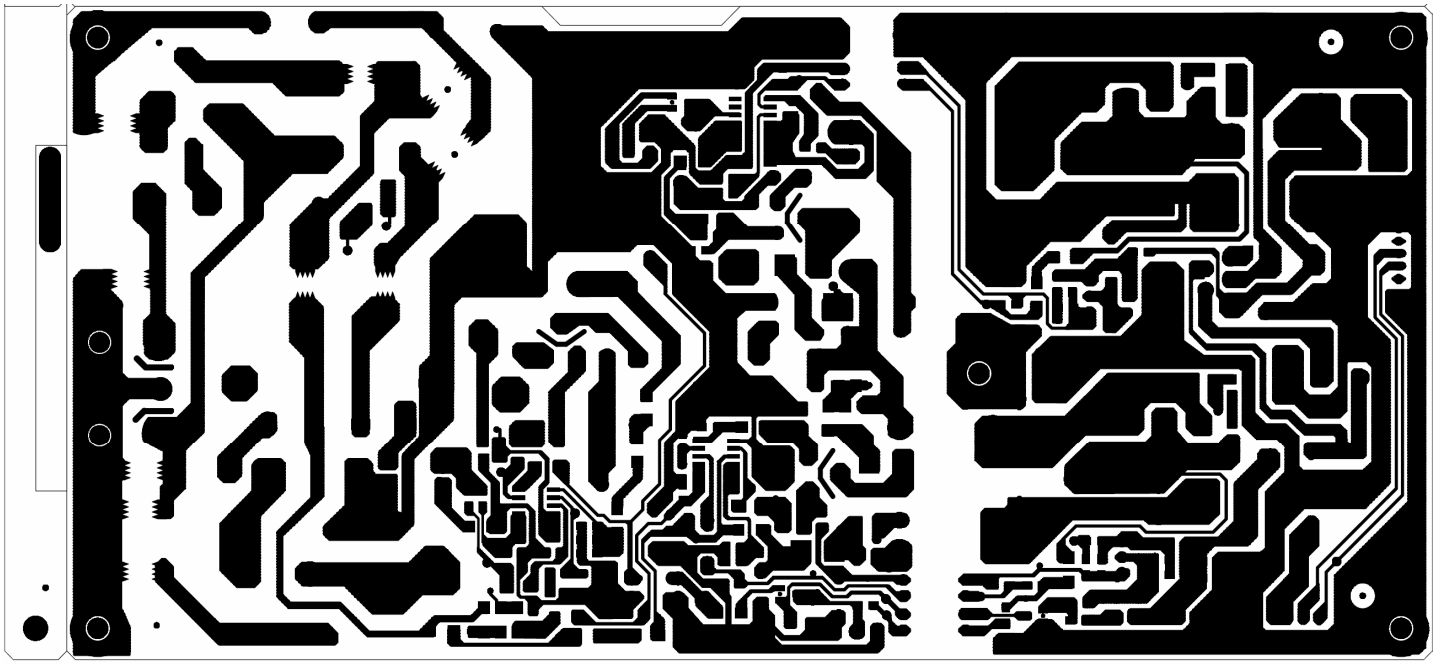

8.3Key Board

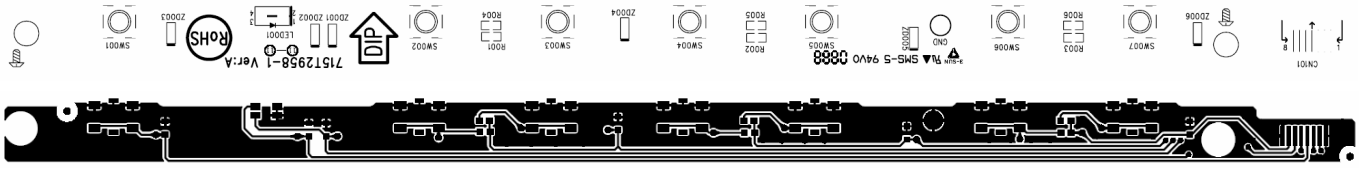

8.4 USB Board

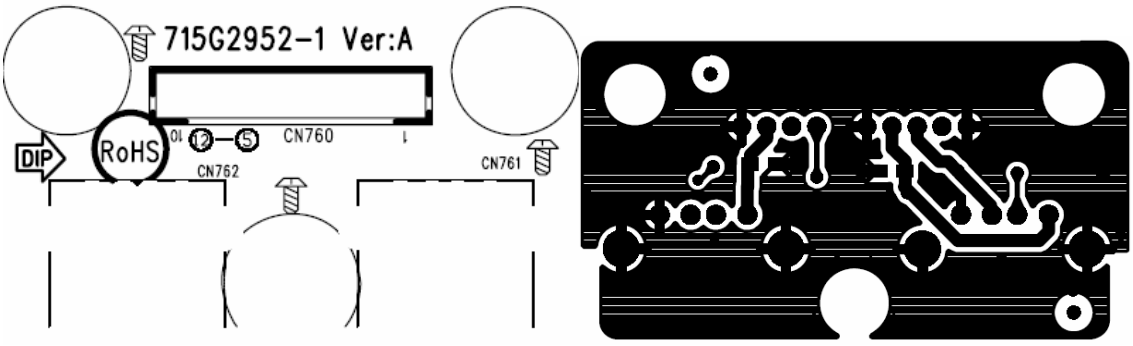

9. Maintainability

9.1 Equipments and Tools Requirement

1. Multi-meter.
2. Oscilloscope.
3. Pattern Generator.
4. DDC Tool with an IBM Compatible Computer.
5. Alignment Tool.
6. LCD Color Analyzer.
7. Service Manual.
8. User Manual.

9.2 Trouble Shooting

No power

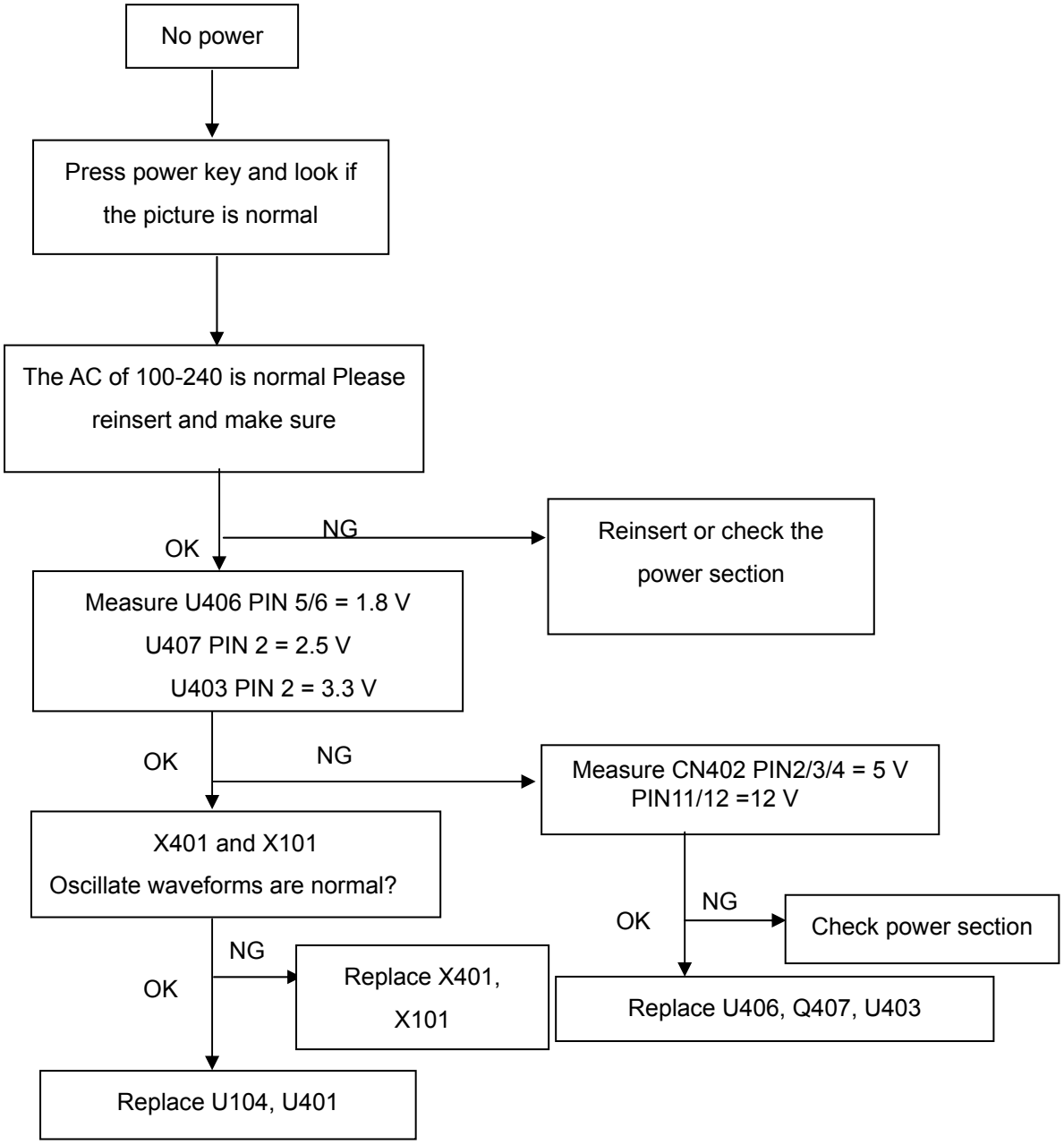

No picture (DVI / HDMI)

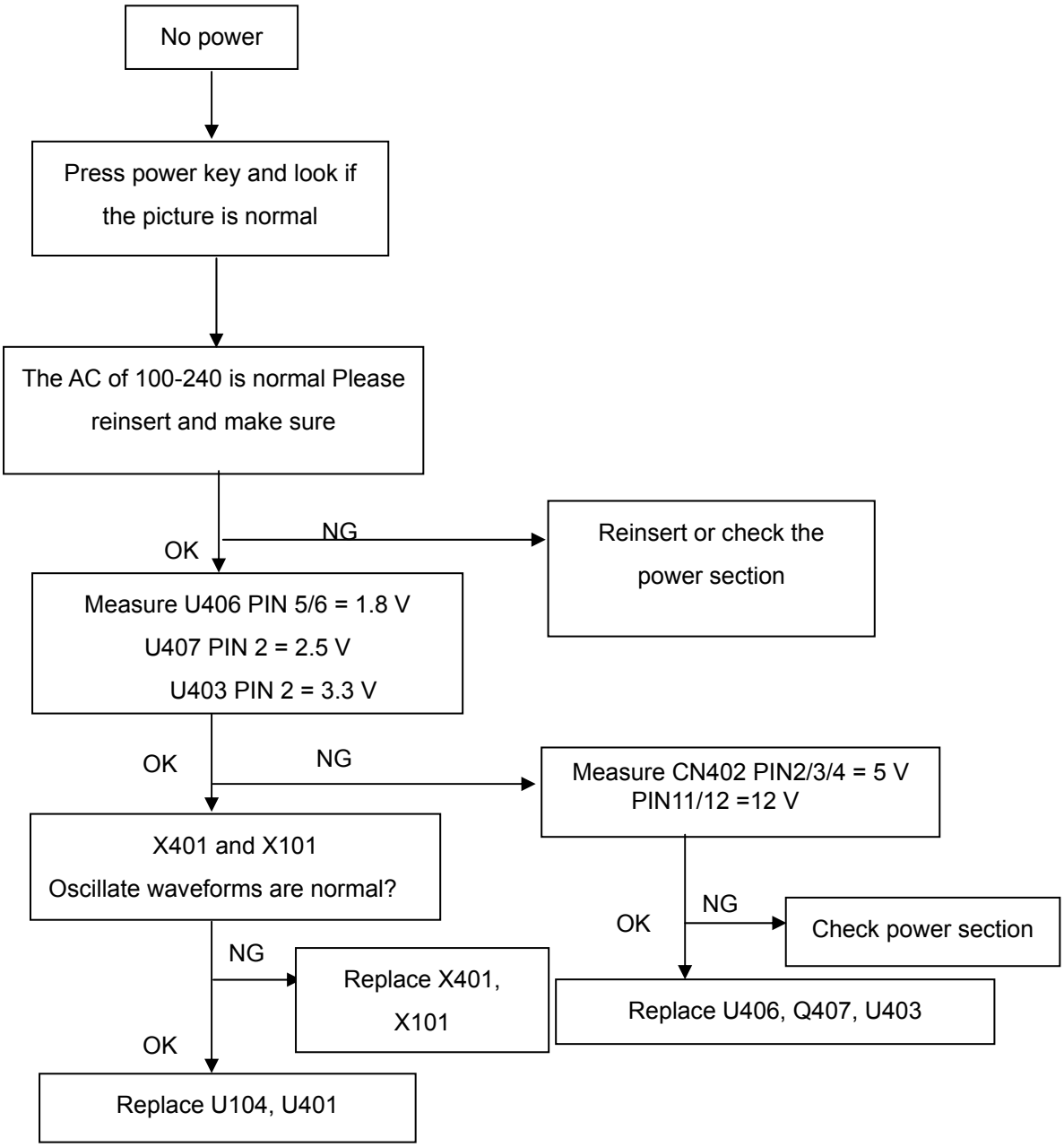

No picture (CVBS / S-VIDEO/ YPBPR)

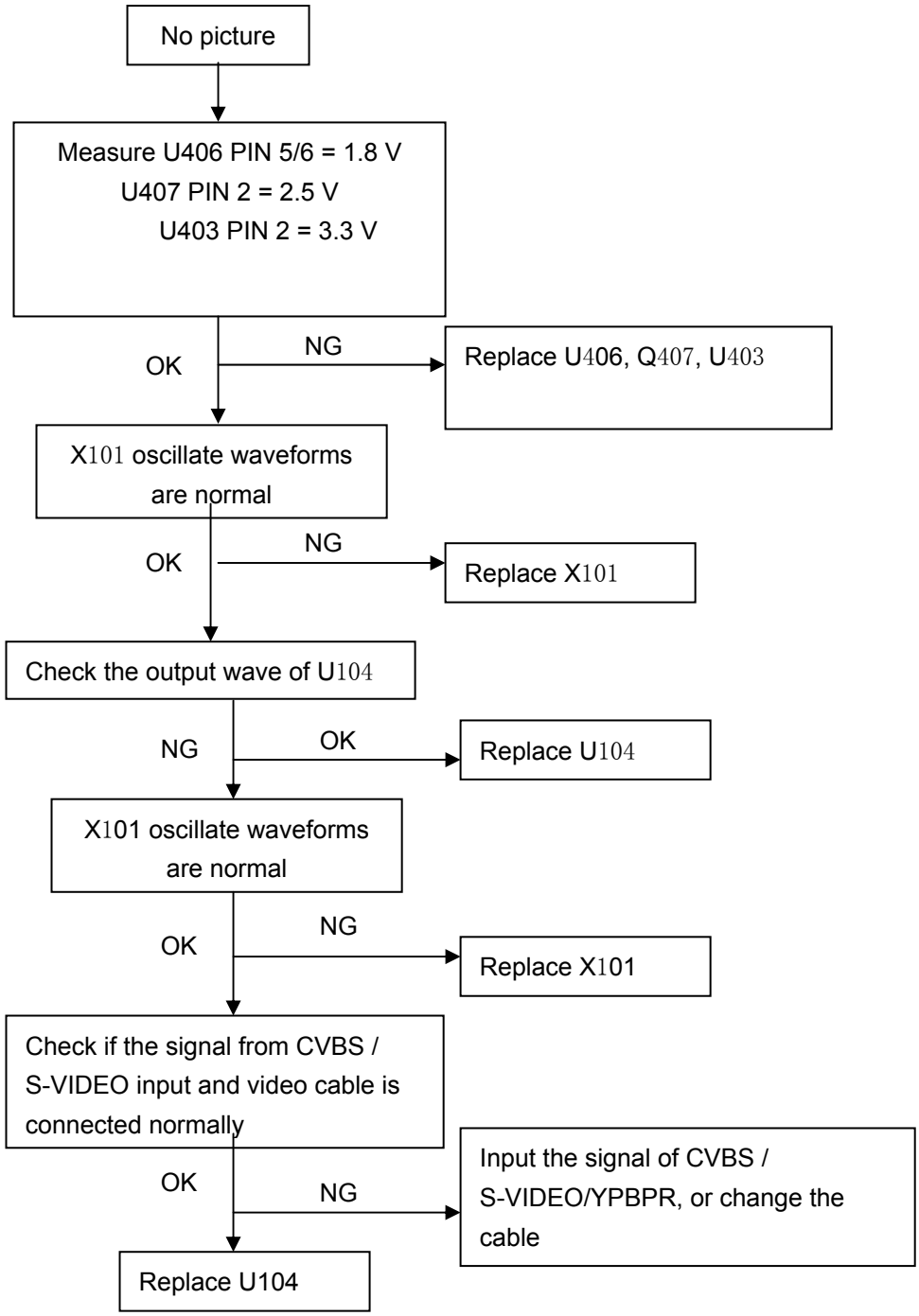

White Screen

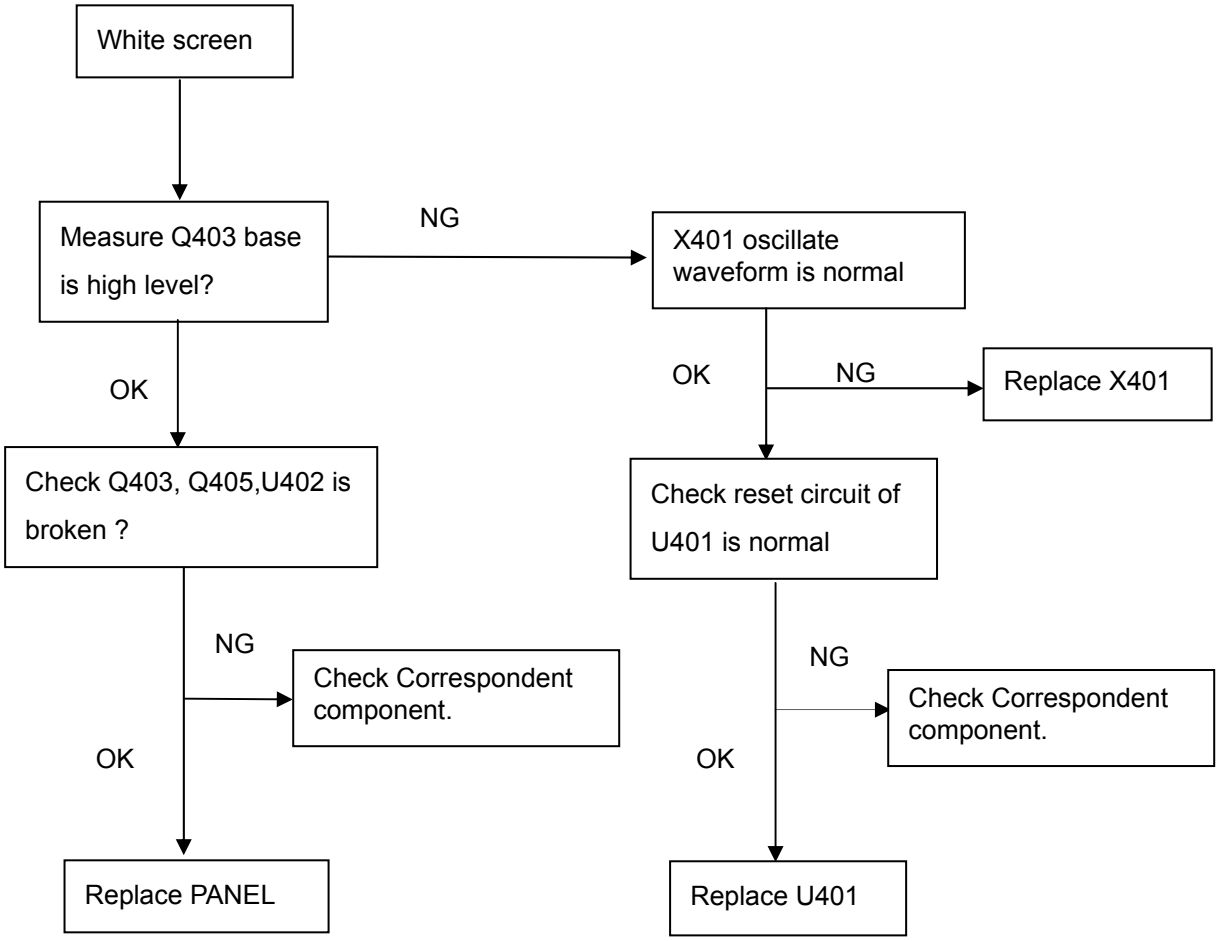

9.2.2 Power/Inverter Board

1. No Power

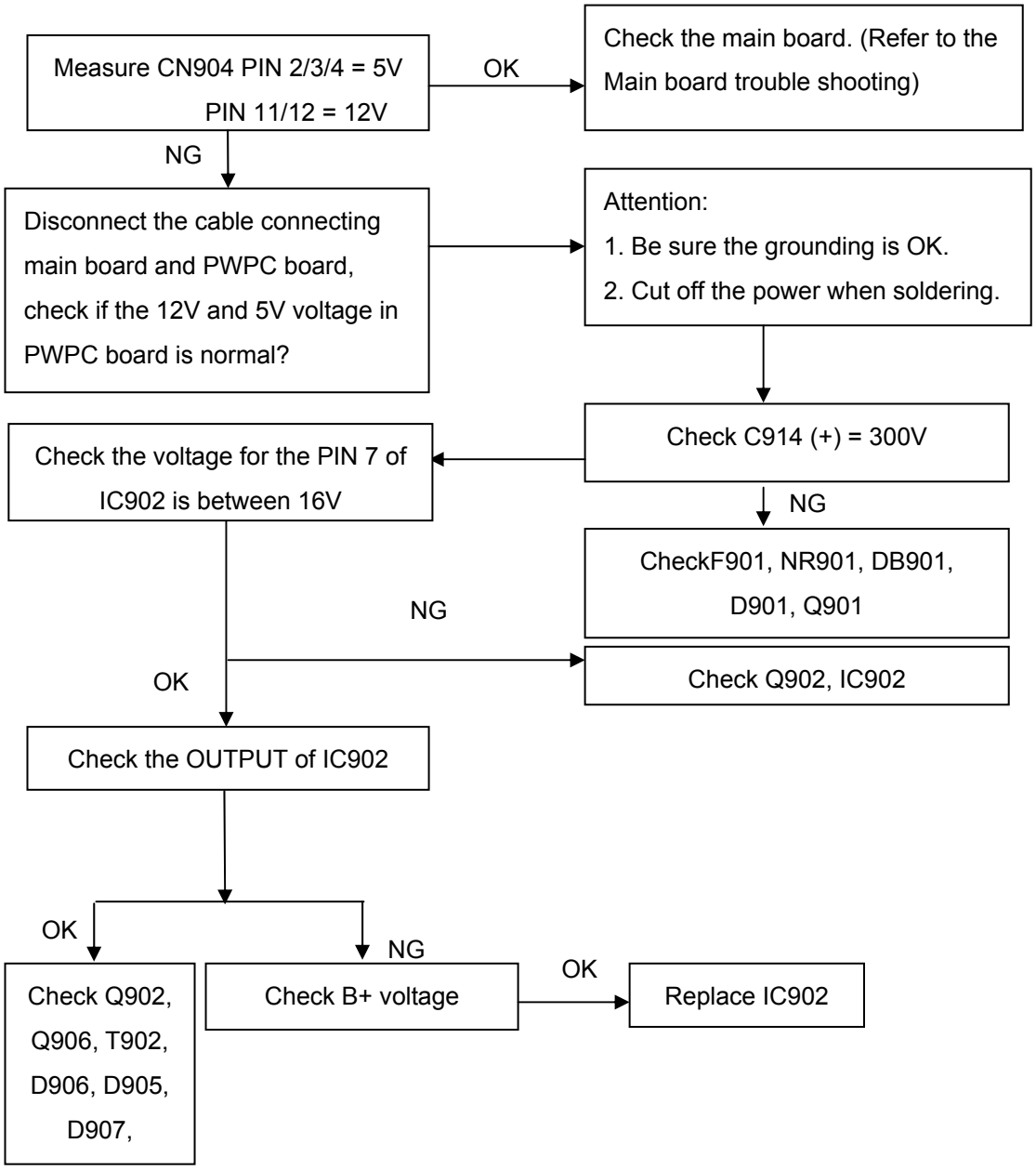

9.2.3 Key Board

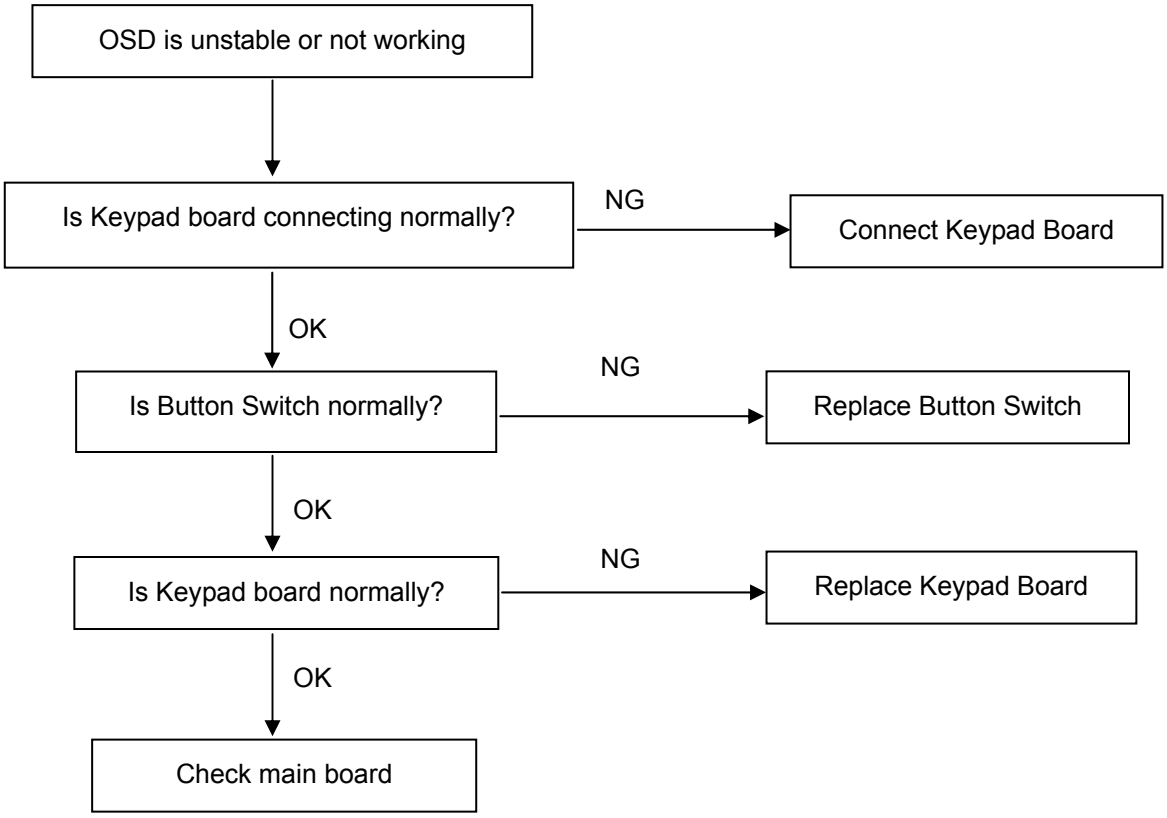

10. White- Balance, Luminance Adjustment

Approximately 30 minutes should be allowed for warm up before proceeding White-Balance adjustment.

1. How to do the Chroma-7120 MEM .Channel setting
   A. Reference to chroma 7120 user guide
   B. Use " **SC**" key and " **NEXT**" key to modify xyY value and use "**ID**" key to modify the TEXT description Following is the procedure to do white-balance adjust

2. Setting the color temp. You want
   A. 9300k color:
      9300 color temp. parameter is x = 283 ±15, y = 297 ±15, Y> 200 cd/m^2 ,
   B. sRGB color:
      sRGB color temp. parameter is x = 313±15, y = 329 ±15, Y>230 cd/m^2)
   C. 6500K color:
      6500K color temp. parameter is x = 313±15, y = 329 ±15, Y>230 cd/m^2)

3. Into factory mode of HP LP2475W:
   Turn on power, press the menu button, pull out the power cord, and then plug the power cord. Then the factory OSD will be at the left top of the panel.
4. Bias adjustment:
   Set the **Contrast** to 80
   Adjust the **Brightness** to 90.
5. Gain adjustment :
   Move cursor to "-F-" and press MENU key
   A. Adjust 9300k color-temperature
      1. Switch the Chroma-7120 to **9300k channel.**
      2. The chroma 7120 will show x = 283±15, y = 297 ±15, Y>200 cd/m^2
      3. Switch the chroma-720 to **RGB MODE** (with press "MODE" button to change)
      4. Adjust the RED of color **9300K** on factory window until chroma 7120 indicator reached the value R=100
      5. Adjust the GREEN of color **9300K** on factory window until chroma 7120 indicator reached the value G=100
      6. Adjust the BLUE of color **9300K** on factory window until chroma 7120 indicator reached the value B=100
      7. Repeat above procedure (item 4,5,6) until chroma 7120 RGB value meet the tolerance =100±2

B. Adjust sRGB color-temperature

1. Switch the chroma-7120 to sRGB **channel.**
2. The chroma 7120 will show x = 313 ±15, y = 329 ±15, Y >230 cd/m^2
3. Switch the chroma 7120 l to **RGB MODE** (with press “MODE” button to change)
4. Adjust the RED of color sRGB on factory window until chroma 7120 indicator reached the value R=100
5. Adjust the GREEN of color sRGB on factory window until chroma 7120 indicator reached the value G=100
6. Adjust the BLUE of color sRGB on factory window until chroma 7120 indicator reached the value B=100
7. Repeat above procedure (item 4,5,6) until chroma 7120 RGB value meet the tolerance =100±2

C. Adjust 6500k color-temperature

1. Switch the chroma-7120 to 6500K **channel.**
2. The chroma 7120 will show x = 313 ±15, y = 329 ±15, Y >230 cd/m^2
3. Switch the chroma 7120 l to **RGB MODE** (with press “MODE” button to change)
4. Adjust the RED of color sRGB on factory window until chroma 7120 indicator reached the value R=100
5. Adjust the GREEN of color sRGB on factory window until chroma 7120 indicator reached the value G=100
6. Adjust the BLUE of color sRGB on factory window until chroma 7120 indicator reached the value B=100
7. Repeat above procedure (item 4,5,6) until chroma 7120 RGB value meet the tolerance =100±2

D. Press reset key and Turn the Power-button “off to on” to quit from factory mode.

11. Mechanical Instructions

Step	Figure	Description
Preparation		Lay the monitor on a flat, soft and clean surface.
Remove the stand	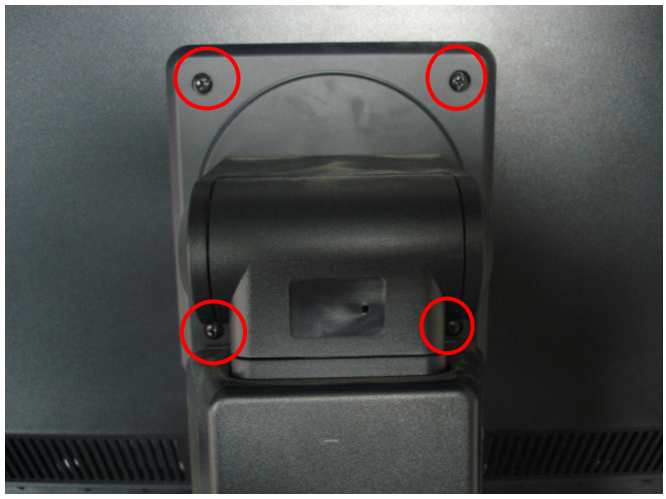	Remove the screws to remove the stand.
Remove the back cover	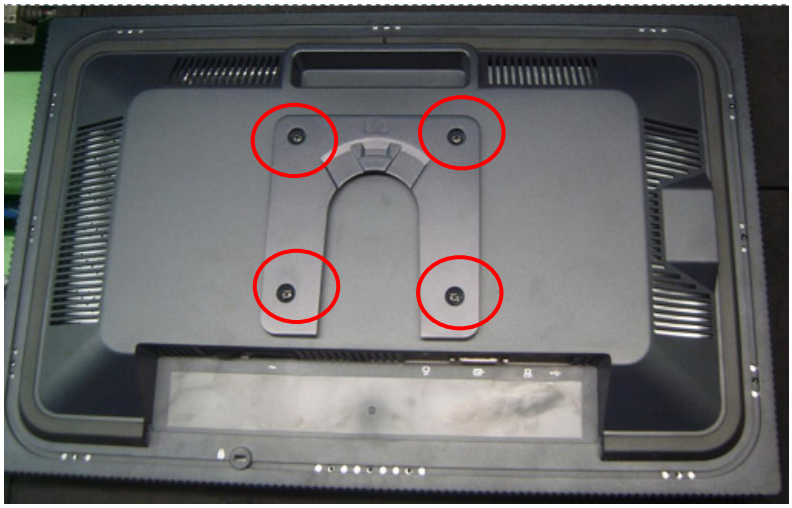	Remove the screws remark in red

Remove the USB board	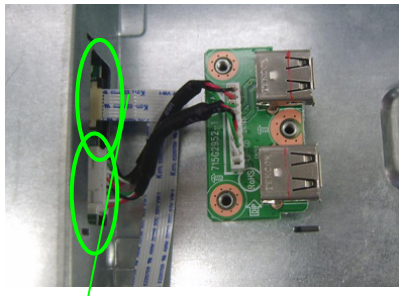 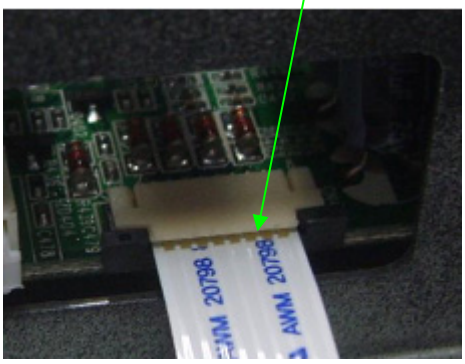 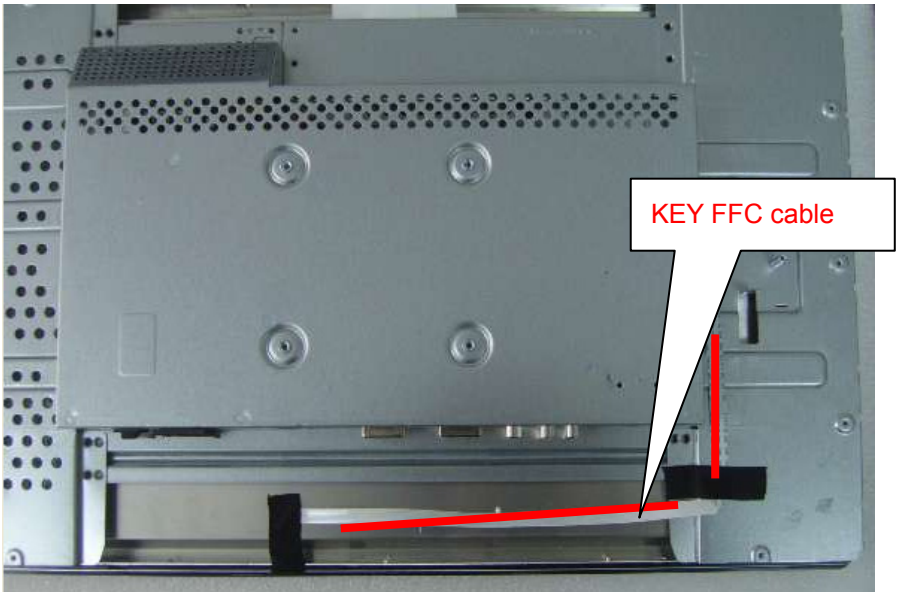	Disconnect the connector remark in green and Remove the screws remark in red

<table>
<tr><td rowspan="2"></td><td> 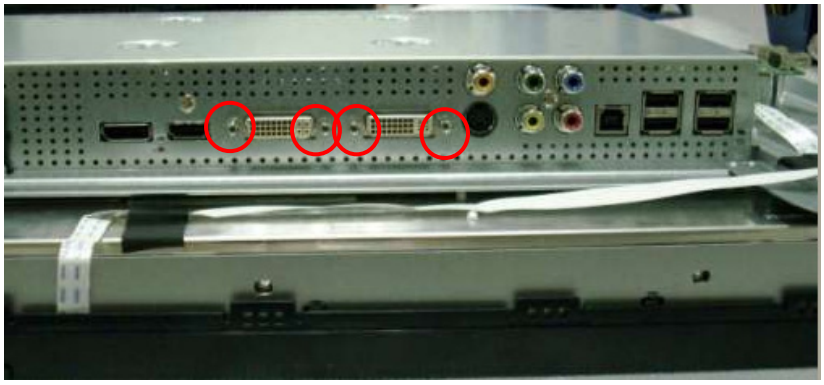 </td><td>Remove the screws marked in red</td></tr>
<tr><td>

 </td><td>Remove the screws marked in red and to remove the main frame</td></tr>
<tr><td>Remove the main frame</td><td></td><td></td></tr>
</table>

	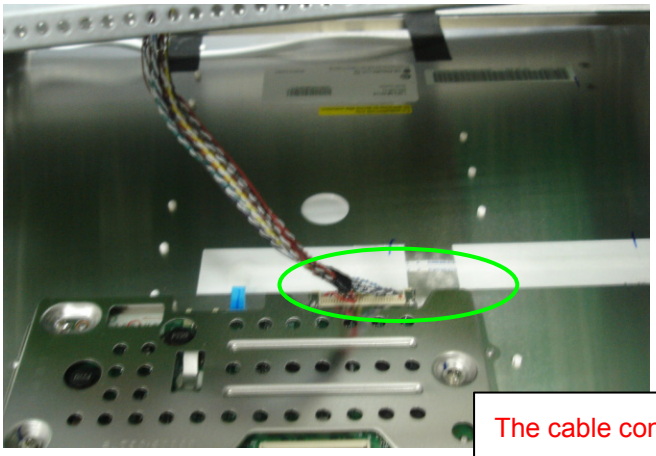 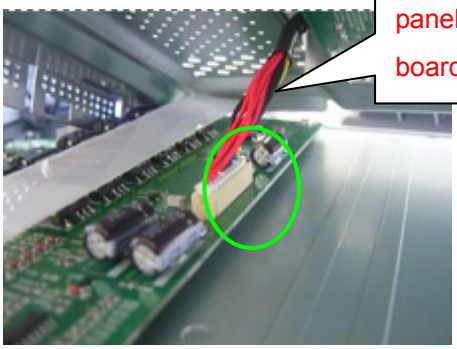 	Disconnect the connector remarked in green to remove LVDS cable and the cable which connect panel and power board
Remove main board and power board	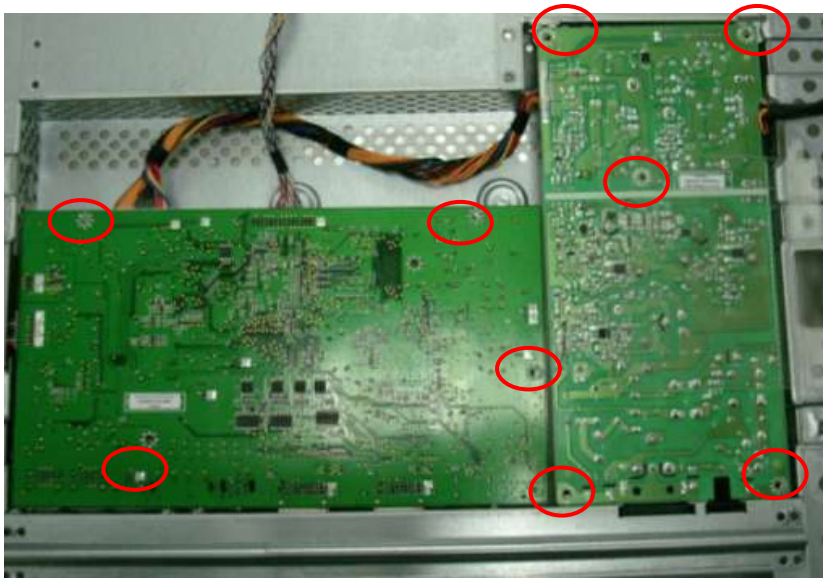 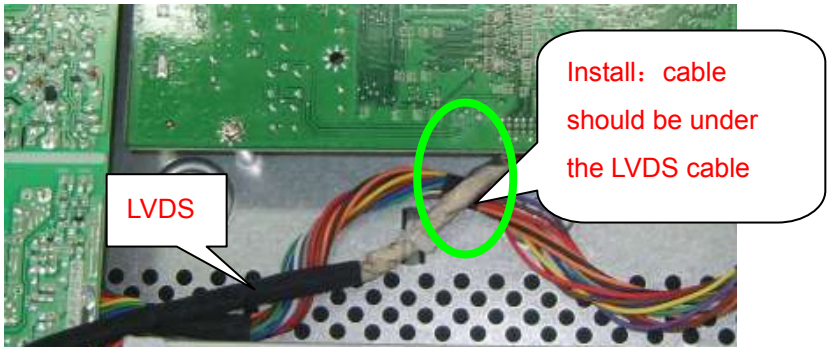 	1.Remove the screws marked in red to remove the main board, power baord, 2.Disconnect the connector and remove the power board and main board.

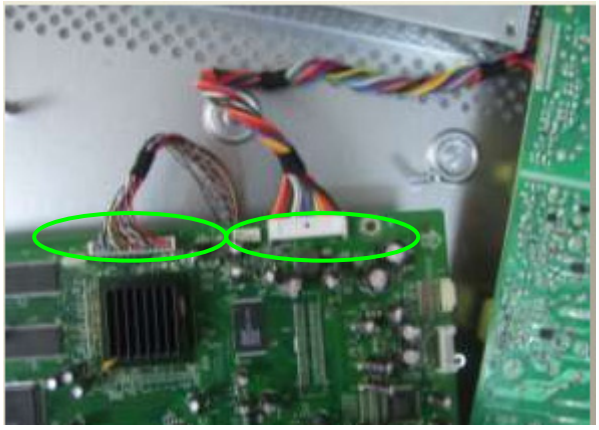

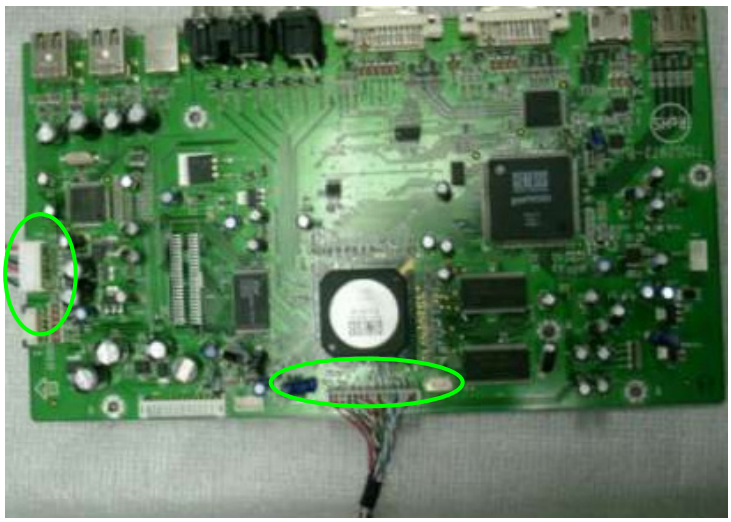

The panel

The end

12. Monitor Exploded View

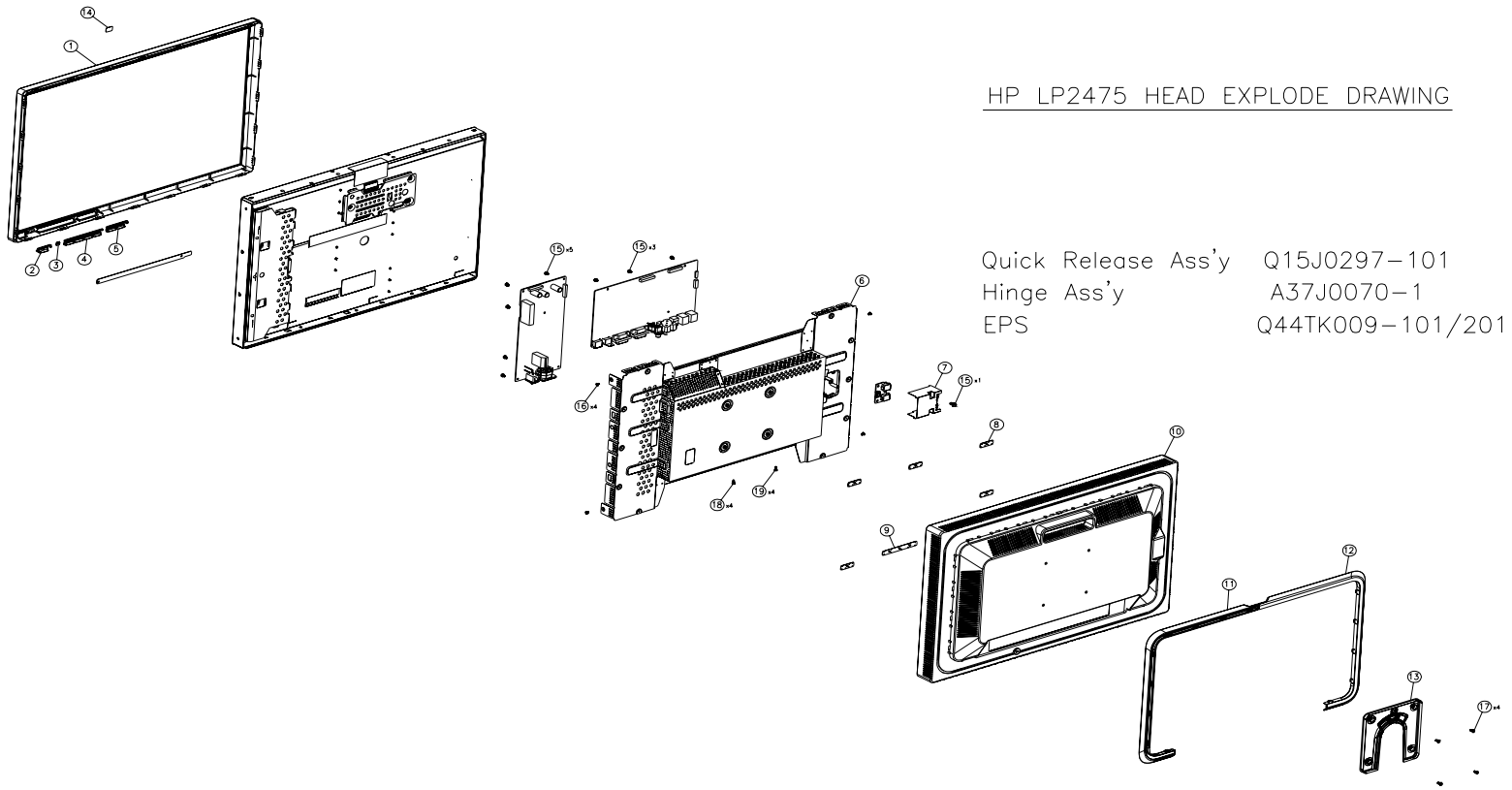

item	part name	item	part name	item	part name
1	BEZEL L24W-8HP2	7	USB SHIELDING	13	AL ALLOY
2	POWER KEY	8	BRACKET-BIG	14	HP LOGO
3	LENS	9	BRACKET-SMALL	15	SCREW
4	OSD BUTTON	10	REAR COVER 24"	16	SCREW
5	TOGGLE BUTTON	11	RUBBER CHANEL(R)	17	SCREW
6	MAIN FRAME	12	RUBBER CHANEL(L)	18	SCREW

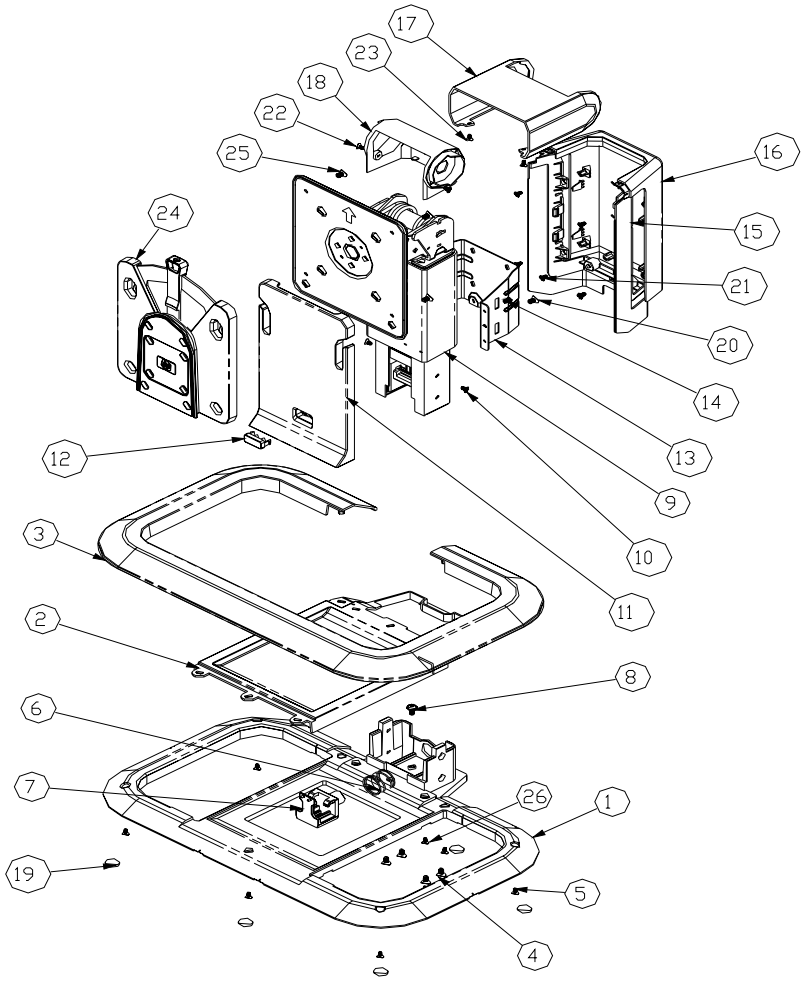

item	part name	item	part name
1	BASE BKT	14	SCREW
2	BASE MID COVER	15	RUBBER STAND
3	BASE	16	STAND REAR
4	SCREW	17	TILT COVER
5	SCREW	18	SWIVEL COVER
6	SPRING	19	PORON
7	LIFT LOCK	20	SCREW
8	HINGE ASS'Y	21	SCREW
9	HINGE ASS'Y	22	SCREW
10	HINGE ASS'Y	23	SCREW
11	STAND FRONT	24	SPRING-EMI
12	RELEASE BUTTON	25	SCREW
13	STAND BKT	26	SCREW

13. BOM List

J248GGDKW9HPNN

Location	Part No.	Description	Remark
	040T 58169016A	TCO03 LABEL	
	050T 500 1	CABLE TIE	
	052G 1211 B	AL TAPE	
	052G 1211503	ALUMINUM FOIL TAPE	
	052T 1150 C	BLACK TAPE	
	052T 1185	MIDDLE TAPE FOR CARTON	
	052T 1186	SMALL TAPE	
	052T6019 1	yellow tape	
	052T6022 1500	glass filament tape	
	089T 175517 G	USB CABLE 2000MM	
	089T 184GAA500	HDMI CABLE	
E08912	089T 187BAA 1	DP CABLE 2000mm	2nd source
E08912	089T 187DAA 1	DP CABLE 1800mm	2nd source
E08912	089T 187MAA 1	DP CABLE 1800mm	
E08903	089T 928GAA 2	DVI-DSUB CABLE 1800mm	
E08903	089T 928LAA 2	DVI-DSUB CABLE 1800mm	2nd source
	089T1748GAA AD	DVI CABLE	
E08901	089T402A19N IS	POWER CORD	
E08901	089T402A19N LS	POWER CORD 1.9M	2nd source
E09501	095T801830D169	HARNESS 30P-30P 200mm	
E09501	095T801830X169	HARNESS 30P-30P 200mm	2nd source
	0M1T 130 6120	SCREW	
	0M1T 840 12225 CR3	SCREW	
	0M1T 930 6120	SCREW M3-0.5X6	
	0M1T1730 6120	SCREW 3*6MM	
	0M1T1730 6120	SCREW 3*6MM	
	0M1T1730 6120	SCREW 3*6MM	
	0Q1T3030 8120	SCREW	
	705TQ834158	HP LP2475 STAND-BASE ASS'Y	
	Q40T 582813 3A	S/N LABEL	
	012T6095 1	PORON	
	0M1T 130 6 47 CR3	SCREW	
	0M1T 130 8 47 CR3	SCREW FLAT M3-0.5X8	
	0M1T 140 8125	SCREW	
	0M1T 140 8125	SCREW	
	0M1T 140 8125	SCREW	
	0M1T 140 12 47 CR3	SCREW	

	0M1T 140 12 47 CR3	SCREW	
	0M1T 840 8225 CR3	SCREW	
	0M1T1840 10120	SCREW	
	0Q1T 130 8120	SCREW	
	0Q1T 130 8120	SCREW	
	0Q1T 130 8120	SCREW	
	0Q1T 930 6120	SCREW	
	A15J0377101	STAND BKT	
	A33J0344 EY 1L0100	RELEASE BUTTON	
	A34J0679 EY 1B0100	TILT COVER	
	A34J0680 EY 1B0100	SWIVEL COVER	
	A34J0684 PC 1B0100	BASE	
	A34J0685 EY 1B0100	BASE MID COVER	
	A34J0698 EY 1X0100	RUBBER STAND	
	A34J0699 EY 1B0100	STAND FRONT	
	A34J0700 EY 1B0100	STAND REAR	
	A37J0070 1	HINGE ASS'Y	
	Q01T6056 1	SCREW	
	Q15J0296101	VESA PLATE	
	Q15J0345101	SPRING-EMI	
	Q19J5005 1	SPRING	
	Q19J5008 1	SPRING	
	Q20J6042 1	Lift Lock	
	Q20J6043 1	BASE BKT	
	Q33J0222 EY 1L0100	RELEASE SNAP	
	Q34J0370 EY 1B0100	VESA COVER	
	Q34J0372 EY 1B0100	DOVETALL	
	750TJGE0W4A11Z000H	PANEL LM240WU4-SLA1 KR LGD	
	A15J0383101	MAIN FRAME	
	A15J0406101	bracket-big	
	A15J0407101	bracket-small	
	A33J0341BCFA1L0100	POWER KEY	
	A33J0343 1 1C0100	LENS	
	A33J0354BCFA1L0100	OSD BUTTON	
	A33J0355BCFA1L0100	TOGGLE BUTTON	
	A34J0695BCFA1B0130	BEZEL L24W-8HP2	
	A34J0696 EYA1B0130	REAR COVER 24"	
	A34J0697 EY 1X0100	RUBBER CHANEL(L)	
	A34J0697 EY 2X0100	RUBBER CHANEL(R)	
	A85J0085101	USB Shielding	

	ADPC72411AA5	ADPC G2956-I-X-X-1-080520	
	040G 45762420A	LABEL 25x6mm	
	009G6005 1	GROUND TERMINAL	
IC950	056G 139 3A	IC PC123Y22FZ0F	
IC951	056G 139 3A	IC PC123Y22FZ0F	
IC955	056G 139 3A	IC PC123Y22FZ0F	
RV901	061G 46 17	VARISTOR 560V TNR14V561K	
NR901	061G 58050 WT	NTC 5 OHM 5A	
C902	063G107K2246S1	X2 CAP 0.22UF K 275VAC	
C901	063G107K474 US	0.47UF +-10%	
C911	063G213J105GFA	MPF CAP	
C912	063G213J105GFA	MPF CAP	
C913	065G 1K103 2E6213	CAP CER 10NF K 1KV	
C929	065G 1K103 2E6213	CAP CER 10NF K 1KV	
C903	065G306M1022BM	Y1.CAP.001UF 250VAC MURATA	
C904	065G306M1022BM	Y1.CAP.001UF 250VAC MURATA	
C928	065G306M2222BM	2200PF +-20% 250VAC	
C909	065T306K3312BP	330PF K 250VAC	
C908	065T306K3312BP	330PF K 250VAC	
C906	065T306K6812BP	Y1 680PF M 250VAC	
C914	067G215L10115N	EC CAP 105 度 100UF 450V	
C973	067G215L1026NS	EC 105℃ CAP 1000UF M 35V	
C966	067G215L1026NS	EC 105℃ CAP 1000UF M 35V	
C975	067G215L471 4N	KY25VB470M-L10*16	
C956	067G215V102 4N	EC 1000UF 25V KY25VB1000M-CC3 12.5*20mm	
C955	067G215V102 4N	EC 1000UF 25V KY25VB1000M-CC3 12.5*20mm	
C957	067G215V471 3R	LOW E.S.R 470UF +/-20% 16V	
C965	067T215L1026NS	EC 1000uF 35V KY35VB1000M-L 12.5*20mm	
C964	067T215L1026NS	EC 1000uF 35V KY35VB1000M-L 12.5*20mm	
FB907	071G 55 21	FERRITE BEAD	
FB904	071G 55 29	FERRITE BEAD	
FB905	071G 55 29	FERRITE BEAD	
L952	073G 253155 L	CHOKE	
L953	073G 253198 T	CHOKE COIL 150uH+/-10%	
L901	073L 174 48 LG	LINE FILTER 10mH MIN	
L903	073T 174 70 H	LINE FILTER	

L902	073T 174 78 L	LINE FILTER	
L904	073T 174112 T	PFC CHOKE 408uH	
SW901	077G 30625B S	ROCKER SWITCH	
T902	080GL24T 17 N	X'FMR 640uH YUVA-961	
T901	080TL24T 14 L	XFMR 750uH PT-008686	
CN901	087G 501 32 S	AC SOCKET	
CN903	095T 82014D 2	HARNESS 14P(SAN)-14P 200mm	
CN904	095T 82514D503	WIRE HARNESS 14P(SCN)-14P(PH)	
CN904	095T 82514Q503	WIRE HARNESS 14P(SCN)-14P(PH)	2nd source
	705GQ856001	IC956 ASS'Y	
IC956	056T 563 54	SI-8120S	
	0M1G1730 8120	SCREW	
HS7	Q90T6084 5	HEAT SINK	
	705GQ857001	Q902 ASS'Y	
Q902	057T 667 32	STP10NK80ZFP T0-220FP	
	0M1G1730 8120	SCREW	
HS5	Q90T6084 5	HEAT SINK	
	705GQ857002	Q905 ASS'Y	
Q905	057T 667 57	MOSFET STF11NM80 11A/800V TO-220FP	
HS4	090G6064 1	HEAT SINK	
	0M1T1730 8120	SCREW	
	705GQ893001	Q901/D901 ASS'Y	
Q901	057G 667 54 1	TRA STF21NM60N 17A/650V TO-220FP	
HS2	090G6064 1	HEAT SINK	
D901	093G 220 33	DIODE FMXA-1106S	
	0M1T1730 8120	SCREW	
	705GQ893002	BD901 ASS'Y	
HS1	090G6064 1	HEAT SINK	
BD901	093G 50460 34	BRIDGE KBJ608G 6A/800V KBJ	
	0M1T1730 10120	SCREW	
	705GQ893003	D953 ASS'Y	
D953	093G 60318	DIODE KCH30A15 30A/150V TO-247	
	0M1G1730 10120	SCREW 42A9930016	
	Q12T 372 8	SILICON	
HS6	Q90T0154 1	HEAT SINK	
	705GQ893004	D951 ASS'Y	
D951	093G 60313	DIODE V40100PG-E3/45 40A/100V TO-3P	

	0M1G1730 10120	SCREW 42A9930016	
	Q12T 372 8	SILICON	
HS8	Q90T0151 1	HEAT SINK	
IC903	056G 379 57	NCP1377BDR2G S0IC-8	
IC902	056G 379 79	IC LD7522PS SOP-8	
IC901	056T 368 12	IC FAN7529MX SOP-8	
Q951	057G 417 4	PMBS3904/PHILIPS-SMT(04)	
Q904	057G 417 4	PMBS3904/PHILIPS-SMT(04)	
Q903	057G 417 6	PMBS3906/PHILIPS-SMT(06)	
R944	061G0805100	10 OHM 1/10W	
R927	061G0805100	10 OHM 1/10W	
R912	061G0805100	10 OHM 1/10W	
R959	061G0805100 2F	RST CHIPR 10KOHM +-1% 1/8W	
R961	061G0805100 2F	RST CHIPR 10KOHM +-1% 1/8W	
R936	061G0805102	RST CHIPR 1K OHM +-5% 1/8W	
R937	061G0805102	RST CHIPR 1K OHM +-5% 1/8W	
R948	061G0805102	RST CHIPR 1K OHM +-5% 1/8W	
R962	061G0805102	RST CHIPR 1K OHM +-5% 1/8W	
R911	061G0805103	RST CHIPR 10K OHM +-5% 1/8W	
R928	061G0805103	RST CHIPR 10K OHM +-5% 1/8W	
R932	061G0805103	RST CHIPR 10K OHM +-5% 1/8W	
R935	061G0805103	RST CHIPR 10K OHM +-5% 1/8W	
R945	061G0805103	RST CHIPR 10K OHM +-5% 1/8W	
R957	061G0805103	RST CHIPR 10K OHM +-5% 1/8W	
R963	061G0805103	RST CHIPR 10K OHM +-5% 1/8W	
R975	061G0805103	RST CHIPR 10K OHM +-5% 1/8W	
R917	061G0805130 2F	RST CHIP 13K 1/8W 1%	
R923	061G0805150 3F	RST CHIP 150K 1/8W 1%	
R976	061G0805150 3F	RST CHIP 150K 1/8W 1%	
R909	061G0805153	RST CHIPR 15KOHM +-5% 1/8W	
R977	061G0805200 2F	RST CHIPR 20 KOHM +-1% 1/8W	
R974	061G0805222	RST CHIPR 2.2KOHM +-5% 1/8W	
R908	061G0805224	RST CHIPR 220 KOHM +-5% 1/8W	
R979	061G0805240 1F	RST CHIPR 2.4K OHM +-1% 1/8W	
R922	061G0805240 3F	RST CHIPR 240 KOHM +-1% 1/8W	
R947	061G0805331	RST CHIPR 330 OHM +-5% 1/8W	
R913	061G0805471	RST CHIPR 470 OHM +-5% 1/8W	
R964	061G0805471	RST CHIPR 470 OHM +-5% 1/8W	
R954	061G0805472	RST CHIPR 4.7 KOHM +-5% 1/8W	
R942	061G0805473	RST CHIPR 47K OHM +-5% 1/8W	

R930	061G0805513	RST CHIPR 51K OHM +-5% 1/8W	
R907	061G0805563	56KOHM 1/10W	
R978	061G0805750 2F	RST CHIPR 75 KOHM +-1% 1/8W	
RJ902	061G1206000	RST CHIPR 0 OHM +-5% 1/4W	
RJ903	061G1206000	RST CHIPR 0 OHM +-5% 1/4W	
RJ904	061G1206000	RST CHIPR 0 OHM +-5% 1/4W	
RJ905	061G1206000	RST CHIPR 0 OHM +-5% 1/4W	
RJ907	061G1206000	RST CHIPR 0 OHM +-5% 1/4W	
R939	061G1206000	RST CHIPR 0 OHM +-5% 1/4W	
R940	061G1206000	RST CHIPR 0 OHM +-5% 1/4W	
R941	061G1206000	RST CHIPR 0 OHM +-5% 1/4W	
R9202	061G1206100 4F	RST CHIPR 1 MOHM +-1% 1/4W	
R9203	061G1206100 4F	RST CHIPR 1 MOHM +-1% 1/4W	
R9201	061G1206100 4F	RST CHIPR 1 MOHM +-1% 1/4W	
R938	061G1206101	RST CHIPR 100 OHM +-5% 1/4W	
R9211	061G1206104	RST CHIPR 100 KOHM +-5% 1/4W	
R9212	061G1206104	RST CHIPR 100 KOHM +-5% 1/4W	
R9213	061G1206104	RST CHIPR 100 KOHM +-5% 1/4W	
R9214	061G1206104	RST CHIPR 100 KOHM +-5% 1/4W	
R972	061G1206122	RST CHIPR 1.2 KOHM +-5% 1/4W	
R973	061G1206122	RST CHIPR 1.2 KOHM +-5% 1/4W	
R9311	061G1206129	RST CHIPR 1.2 OHM +-5% 1/4W	
R9312	061G1206129	RST CHIPR 1.2 OHM +-5% 1/4W	
R9251	061G1206150 3F	RST CHIPR 150KOHM +-1% 1/4W	
R9252	061G1206150 3F	RST CHIPR 150KOHM +-1% 1/4W	
R9253	061G1206150 3F	RST CHIPR 150KOHM +-1% 1/4W	
R933	061G1206229	RST CHIPR 2.2 OHM +-5% 1/4W	
R929	061G1206471	RST CHIPR 470 OHM +-5% 1/4W	
R914	061G1206680 3F	RST CHIPR 680KOHM +-1% 1/4W	
R915	061G1206680 3F	RST CHIPR 680KOHM +-1% 1/4W	
R916	061G1206680 3F	RST CHIPR 680KOHM +-1% 1/4W	
R901	061G1206684	RST CHIPR 680K OHM +-5% 1/4W	
R902	061G1206684	RST CHIPR 680K OHM +-5% 1/4W	
R903	061G1206684	RST CHIPR 680K OHM +-5% 1/4W	
R9261	061T1206224	RST CHIPR 220KOHM +-5% 1/4W	
R9262	061T1206224	RST CHIPR 220KOHM +-5% 1/4W	
R9263	061T1206224	RST CHIPR 220KOHM +-5% 1/4W	
R9264	061T1206224	RST CHIPR 220KOHM +-5% 1/4W	
C910	065G0805102 32	CHIP 1000P 50VX7R 0805	
C934	065G0805102 32	CHIP 1000P 50VX7R 0805	

C922	065G0805103 32	CAP CHIP 0805 10NF K 50V X7R	
C920	065G0805103 32	CAP CHIP 0805 10NF K 50V X7R	
C976	065G0805104 32	CAP CHIP 0805 0.1uF K 50V X7R	
C974	065G0805104 32	CAP CHIP 0805 0.1uF K 50V X7R	
C972	065G0805104 32	CAP CHIP 0805 0.1uF K 50V X7R	
C970	065G0805104 32	CAP CHIP 0805 0.1uF K 50V X7R	
C968	065G0805104 32	CAP CHIP 0805 0.1uF K 50V X7R	
C967	065G0805104 32	CAP CHIP 0805 0.1uF K 50V X7R	
C962	065G0805104 32	CAP CHIP 0805 0.1uF K 50V X7R	
C961	065G0805104 32	CAP CHIP 0805 0.1uF K 50V X7R	
C959	065G0805104 32	CAP CHIP 0805 0.1uF K 50V X7R	
C958	065G0805104 32	CAP CHIP 0805 0.1uF K 50V X7R	
C924	065G0805104 32	CAP CHIP 0805 0.1uF K 50V X7R	
C907	065G0805105 37	CHIP 1UF 50V Y5V	
C921	065G0805221 22	CHIP 220PF 25V X7R 0805	
C933	065G0805221 22	CHIP 220PF 25V X7R 0805	
C917	065G0805331 31	CHIP 330pF 50V NPO	
C919	065G0805334 32	CHIP 0.33UF 50V X7R	
C918	065G0805473 32	CHIP 0.047UF 50V X7R	
C915	065G0805560 31	MLCC 0805 56PF J 50V NP0	
C931	065G0805820 31	82PF 50V	
D910	093G 6432V	LL4148-GSO8	
D905	093G 6432V	LL4148-GSO8	
D904	093G 6432V	LL4148-GSO8	
D903	093G 6432V	LL4148-GSO8	
D902	093G 6432V	LL4148-GSO8	
D906	093G 52S 10 T	DIODE US1M-E3/61T 1A/1000V DO-214AC	
D909	093G 52S 10 T	DIODE US1M-E3/61T 1A/1000V DO-214AC	
D907	093G 52S 10 T	DIODE US1M-E3/61T 1A/1000V DO-214AC	
D955	093G5004 1	SR54 T0-214AA	
ZD902	093T 39S 15 T	RLZ15B	
ZD901	093T 39S 15 T	RLZ15B	
SW901	006G 31 4	1.7MM RIVET	
IC954	056G 158 12	KIA431A-AT/P TO-92	
IC953	056G 158 12	KIA431A-AT/P TO-92	
R906	061G152M12852T	RST MOFR 0.12 OHM +-5% 2WS	
R946	061G152M36852T	RST MOF 0R36 5% 2W	

R905	061T 30310852T GP	0.1 OHM 1W FUSE RESISTOR	
C930	065G 1K102 5T6213	CER CAP 1000PF K 1KV TDK	
C923	065G 1K102 5T6213	CER CAP 1000PF K 1KV TDK	
C936	067G 2154707NT	KY50VB47M-TP5 6.3*11	
C932	067G 2154707NT	KY50VB47M-TP5 6.3*11	
C925	067T215S1007RT	EC 10uF 50V 5*11mm	
C937	067T215S4707RT	EC 47uF 50V 6.3*11 mm	
C926	067T215S4707RT	EC 47uF 50V 6.3*11 mm	
FB901	071G 55 9 T	FERRITE BEAD	
FB903	071G 55 29	FERRITE BEAD	
FB906	071G 55 29	FERRITE BEAD	
F902	084G 55 4	FUSE 382-5A 250V WICKMANN	
F901	084G 56 3W	FUSE	
D908	093G 6038T52T	FR103	
	715T2956 1	POWER BOARD PCB	
CN901	006G 31500	EYELET	
L951	S73G25391V	CHOKE COIL ASS'Y	
	CBPF8G4NQ1	MAIN BOARD T2972-G-X-X-1-080604	
	040T 45762412B	CBPC LABEL	
CN102	033T3802 4	WAFER PH-4	
CN401	033T3802 4	WAFER PH-4	
CN701	033T3802 8B YH	CONNECTOR 8PIN 2.0PITCH	
CN402	033T380214B YH	CONNECTOR 14P 2.0PITCH	
CN405	033T8019 8S H	FPC CONN. 1.0mm 8P	
CN404	033T8027 30	WAFER	
C402	067T215V471 4R	LOW E.S.R 470UF +/-20% 25V	
C412	067T215V471 4R	LOW E.S.R 470UF +/-20% 25V	
C406	067T215V471 4R	LOW E.S.R 470UF +/-20% 25V	
L401	073T 253900 L	CHOKE COIL 35uH+/-10% 82mohm DR10*8	
CN104	088T 7813A 9C	RCA JACK 2*2 G/B+Y/R	
CN105	088T 7813A44C	RCA +S 1+1 O+B AV-S-01-O	
CN702	088T 350 1 TN	USB CONNECTOR AX2 TYPE 5402-3C5-110-70	
CN703	088T 350 1 TN	USB CONNECTOR AX2 TYPE 5402-3C5-110-70	
CN704	088T 351 2B TN	USB CONNECTOR B TYPE 5411-02-310-51	
CN106	088T 35428F H	DVI 28PIN CONN F	
CN107	088T 35428F H	DVI 28PIN CONN F	

X401	093T 2280B J	CRYSTAL 19.6608MHZ 20PF 49u/s	
C748	067T 2151014RT	EC 105℃ CAP 100UF M 25V	
C737	067T 2151014RT	EC 105℃ CAP 100UF M 25V	
C420	067T 2151014RT	EC 105℃ CAP 100UF M 25V	
C419	067T 2151014RT	EC 105℃ CAP 100UF M 25V	
C416	067T 2151014RT	EC 105℃ CAP 100UF M 25V	
C411	067T 2151014RT	EC 105℃ CAP 100UF M 25V	
C409	067T 2151014RT	EC 105℃ CAP 100UF M 25V	
C403	067T 2151014RT	EC 105℃ CAP 100UF M 25V	
C209	067T 2151014RT	EC 105℃ CAP 100UF M 25V	
C148	067T 2151014RT	EC 105℃ CAP 100UF M 25V	
C479	067T 2152207NT	KY50VB22M-TP5 5*11	
C463	067T 2152207NT	KY50VB22M-TP5 5*11	
C462	067T 2152207NT	KY50VB22M-TP5 5*11	
C444	067T 2152207NT	KY50VB22M-TP5 5*11	
C443	067T 2152207NT	KY50VB22M-TP5 5*11	
C426	067T 2152207NT	KY50VB22M-TP5 5*11	
C425	067T 2152207NT	KY50VB22M-TP5 5*11	
C401	067T 2152207NT	KY50VB22M-TP5 5*11	
C144	067T 2152207NT	KY50VB22M-TP5 5*11	
C135	067T 2152207NT	KY50VB22M-TP5 5*11	
C127	067T 2152207NT	KY50VB22M-TP5 5*11	
C112	067T 2152207NT	KY50VB22M-TP5 5*11	
C103	067T 2152207NT	KY50VB22M-TP5 5*11	
C102	067T 2152207NT	KY50VB22M-TP5 5*11	
C241	067T 2152207NT	KY50VB22M-TP5 5*11	
C240	067T 2152207NT	KY50VB22M-TP5 5*11	
C747	067T 2152207NT	KY50VB22M-TP5 5*11	
C745	067T 2152207NT	KY50VB22M-TP5 5*11	
C738	067T 2152207NT	KY50VB22M-TP5 5*11	
C721	067T 2152207NT	KY50VB22M-TP5 5*11	
C516	067T 2152207NT	KY50VB22M-TP5 5*11	
C511	067T 2152207NT	KY50VB22M-TP5 5*11	
C507	067T 2152207NT	KY50VB22M-TP5 5*11	
C503	067T 2152207NT	KY50VB22M-TP5 5*11	
C501	067T 2152207NT	KY50VB22M-TP5 5*11	
C498	067T 2152207NT	KY50VB22M-TP5 5*11	
C494	067T 2152207NT	KY50VB22M-TP5 5*11	
C480	067T 2152207NT	KY50VB22M-TP5 5*11	
C413	067T 2152214NT	CAP L105℃ 220UF M 25V NCC	

C703	067T 2152214NT	CAP L105℃ 220UF M 25V NCC	
C707	067T 2152214NT	CAP L105℃ 220UF M 25V NCC	
C710	067T 2152214NT	CAP L105℃ 220UF M 25V NCC	
C712	067T 2152214NT	CAP L105℃ 220UF M 25V NCC	
C716	067T 2152214NT	CAP L105℃ 220UF M 25V NCC	
C718	067T 2152214NT	CAP L105℃ 220UF M 25V NCC	
C534	067T 2152214NT	CAP L105℃ 220UF M 25V NCC	
C720	067T 2154797NT	LOW ESR 4.7UF+-20% 50V BY CHEM	
C736	067T 2154797NT	LOW ESR 4.7UF+-20% 50V BY CHEM	
C732	067T 2154797NT	LOW ESR 4.7UF+-20% 50V BY CHEM	
U406	056T 563 57	AP1510SA	
U403	056T 563 91	IC G1084-33T53Uf TO-263	
U407	056T 563127	IC G1117-25T63Uf SOT-223	
U701	056T 566 12	AO 4801	
U404	056T 585 4	AIC1117-33PY ANALOG	
U405	056T 585 4	AIC1117-33PY ANALOG	
U704	056T 585 4A	AP1117E33LA	
U104	056T 586 15	IC gm69010H-BE QFP-160	
U410	056T 61550A	HY5DU561622ETP-4-C TSOPII-66	
U409	056T 61550A	HY5DU561622ETP-4-C TSOPII-66	
U114	056T 620 4	IC SN74LV4053ADR SOIC-16 TI	
U115	056T 620 4	IC SN74LV4053ADR SOIC-16 TI	
U127	056T 620 4	IC SN74LV4053ADR SOIC-16 TI	
U122	056T 623 26	IC PI3V512QE QSOP-24	
U123	056T 634 20	IC PI3HDMI341ARCFFE LQFP-80	
U702	056T 659 5	IC USB2507-ADT TQFP-80	
U117	056T 662 13	IC AZC099-04S SOT23-6L	
U119	056T 662 13	IC AZC099-04S SOT23-6L	
U128	056T 662500	IC ESD AZ1045-04QU	
U129	056T 662500	IC ESD AZ1045-04QU	
U401	056T1126 41	IC FLI30336-AC PBGA-416	
U413	056T1133 32	M24C04-WMN6TP	
U101	056T1133 34	M24C02-WMN6TP	
U106	056T1133 34	M24C02-WMN6TP	
U110	056T1133 34	M24C02-WMN6TP	
U112	056T1133 34	M24C02-WMN6TP	
U116	056T1133 34	M24C02-WMN6TP	
U126	056T1133 34	M24C02-WMN6TP	
U102	056T1133 81	SST25LF020A-33-4C-SAE	
U703	056T1133 84	AF24BC02-S1	

U411	056T1133 93	IC AF24BC32-SI 32K SOIC-8	
U408	056T1133921	IC MX29LV320CTTC-90G TSOP-48	
Q101	057T 417 4	CHIP PMBS3904 BY PHILIPS	
Q102	057T 417 4	CHIP PMBS3904 BY PHILIPS	
Q103	057T 417 4	CHIP PMBS3904 BY PHILIPS	
Q402	057T 417 4	CHIP PMBS3904 BY PHILIPS	
Q403	057T 417 4	CHIP PMBS3904 BY PHILIPS	
Q404	057T 417 4	CHIP PMBS3904 BY PHILIPS	
Q406	057T 417 4	CHIP PMBS3904 BY PHILIPS	
Q408	057T 417 4	CHIP PMBS3904 BY PHILIPS	
Q410	057T 417 4	CHIP PMBS3904 BY PHILIPS	
Q701	057T 417 4	CHIP PMBS3904 BY PHILIPS	
Q411	057T 417 6	PMBS3906/PHILIPS-SMT	
Q412	057T 417 6	PMBS3906/PHILIPS-SMT	
Q401	057T 763 1	A03401L SOT23 BY AOS	
Q409	057T 763 1	A03401L SOT23 BY AOS	
U402	057T 763 3	AO4411L SO-8 BY AOS SMT	
RP19	061T 126330 8	RST CHIPR AR 8P4R 33 OHM +-5% 1/16W	
RP2	061T 126330 8	RST CHIPR AR 8P4R 33 OHM +-5% 1/16W	
RP20	061T 126330 8	RST CHIPR AR 8P4R 33 OHM +-5% 1/16W	
RP21	061T 126330 8	RST CHIPR AR 8P4R 33 OHM +-5% 1/16W	
RP22	061T 126330 8	RST CHIPR AR 8P4R 33 OHM +-5% 1/16W	
RP3	061T 126330 8	RST CHIPR AR 8P4R 33 OHM +-5% 1/16W	
RP4	061T 126330 8	RST CHIPR AR 8P4R 33 OHM +-5% 1/16W	
RP5	061T 126330 8	RST CHIPR AR 8P4R 33 OHM +-5% 1/16W	
RP6	061T 126330 8	RST CHIPR AR 8P4R 33 OHM +-5% 1/16W	
RP18	061T 126330 8	RST CHIPR AR 8P4R 33 OHM +-5% 1/16W	
RP1	061T 126330 8	RST CHIPR AR 8P4R 33 OHM +-5% 1/16W	
RP10	061T 126330 8	RST CHIPR AR 8P4R 33 OHM +-5% 1/16W	

RP11	061T 126330 8	RST CHIPR AR 8P4R 33 OHM +-5% 1/16W	
RP12	061T 126330 8	RST CHIPR AR 8P4R 33 OHM +-5% 1/16W	
RP13	061T 126330 8	RST CHIPR AR 8P4R 33 OHM +-5% 1/16W	
RP14	061T 126330 8	RST CHIPR AR 8P4R 33 OHM +-5% 1/16W	
RP15	061T 126330 8	RST CHIPR AR 8P4R 33 OHM +-5% 1/16W	
RP16	061T 126330 8	RST CHIPR AR 8P4R 33 OHM +-5% 1/16W	
RP17	061T 126330 8	RST CHIPR AR 8P4R 33 OHM +-5% 1/16W	
F701	061T 56A075 LT	SMD PTC 0.75A 1206L075.WR 1206	
F702	061T 56A075 LT	SMD PTC 0.75A 1206L075.WR 1206	
F703	061T 56A075 LT	SMD PTC 0.75A 1206L075.WR 1206	
F704	061T 56A075 LT	SMD PTC 0.75A 1206L075.WR 1206	
F705	061T 56A075 LT	SMD PTC 0.75A 1206L075.WR 1206	
F706	061T 56A075 LT	SMD PTC 0.75A 1206L075.WR 1206	
R480	061T0402000	RST CHIP JUMP MAX 0R05 1/16W	
R481	061T0402000	RST CHIP JUMP MAX 0R05 1/16W	
R482	061T0402000	RST CHIP JUMP MAX 0R05 1/16W	
R491	061T0402000	RST CHIP JUMP MAX 0R05 1/16W	
R492	061T0402000	RST CHIP JUMP MAX 0R05 1/16W	
R578	061T0402000	RST CHIP JUMP MAX 0R05 1/16W	
R329	061T0402000	RST CHIP JUMP MAX 0R05 1/16W	
R340	061T0402000	RST CHIP JUMP MAX 0R05 1/16W	
R341	061T0402000	RST CHIP JUMP MAX 0R05 1/16W	
R342	061T0402000	RST CHIP JUMP MAX 0R05 1/16W	
R343	061T0402000	RST CHIP JUMP MAX 0R05 1/16W	
R344	061T0402000	RST CHIP JUMP MAX 0R05 1/16W	
R345	061T0402000	RST CHIP JUMP MAX 0R05 1/16W	
R346	061T0402000	RST CHIP JUMP MAX 0R05 1/16W	
R347	061T0402000	RST CHIP JUMP MAX 0R05 1/16W	
R101	061T0402000	RST CHIP JUMP MAX 0R05 1/16W	
R109	061T0402000	RST CHIP JUMP MAX 0R05 1/16W	
R170	061T0402000	RST CHIP JUMP MAX 0R05 1/16W	
R172	061T0402000	RST CHIP JUMP MAX 0R05 1/16W	
R316	061T0402000	RST CHIP JUMP MAX 0R05 1/16W	

R322	061T0402000	RST CHIP JUMP MAX 0R05 1/16W	
R323	061T0402000	RST CHIP JUMP MAX 0R05 1/16W	
R324	061T0402000	RST CHIP JUMP MAX 0R05 1/16W	
R325	061T0402000	RST CHIP JUMP MAX 0R05 1/16W	
R326	061T0402000	RST CHIP JUMP MAX 0R05 1/16W	
R327	061T0402000	RST CHIP JUMP MAX 0R05 1/16W	
R401	061T0402000	RST CHIP JUMP MAX 0R05 1/16W	
R471	061T0402000	RST CHIP JUMP MAX 0R05 1/16W	
R472	061T0402000	RST CHIP JUMP MAX 0R05 1/16W	
R478	061T0402000	RST CHIP JUMP MAX 0R05 1/16W	
R125	061T0402101	RST CHIPR 100 OHM +-5% 1/16W	
R126	061T0402101	RST CHIPR 100 OHM +-5% 1/16W	
R171	061T0402101	RST CHIPR 100 OHM +-5% 1/16W	
R173	061T0402101	RST CHIPR 100 OHM +-5% 1/16W	
R262	061T0402101	RST CHIPR 100 OHM +-5% 1/16W	
R263	061T0402101	RST CHIPR 100 OHM +-5% 1/16W	
R264	061T0402101	RST CHIPR 100 OHM +-5% 1/16W	
R297	061T0402101	RST CHIPR 100 OHM +-5% 1/16W	
R298	061T0402101	RST CHIPR 100 OHM +-5% 1/16W	
R299	061T0402101	RST CHIPR 100 OHM +-5% 1/16W	
R317	061T0402101	RST CHIPR 100 OHM +-5% 1/16W	
R318	061T0402101	RST CHIPR 100 OHM +-5% 1/16W	
R319	061T0402101	RST CHIPR 100 OHM +-5% 1/16W	
R488	061T0402101	RST CHIPR 100 OHM +-5% 1/16W	
R443	061T0402103	RST CHIPR 10KOHM +-5% 1/16W	
R445	061T0402103	RST CHIPR 10KOHM +-5% 1/16W	
R446	061T0402103	RST CHIPR 10KOHM +-5% 1/16W	
R447	061T0402103	RST CHIPR 10KOHM +-5% 1/16W	
R449	061T0402103	RST CHIPR 10KOHM +-5% 1/16W	
R450	061T0402103	RST CHIPR 10KOHM +-5% 1/16W	
R455	061T0402103	RST CHIPR 10KOHM +-5% 1/16W	
R456	061T0402103	RST CHIPR 10KOHM +-5% 1/16W	
R457	061T0402103	RST CHIPR 10KOHM +-5% 1/16W	
R458	061T0402103	RST CHIPR 10KOHM +-5% 1/16W	
R461	061T0402103	RST CHIPR 10KOHM +-5% 1/16W	
R465	061T0402103	RST CHIPR 10KOHM +-5% 1/16W	
R466	061T0402103	RST CHIPR 10KOHM +-5% 1/16W	
R442	061T0402103	RST CHIPR 10KOHM +-5% 1/16W	
R428	061T0402103	RST CHIPR 10KOHM +-5% 1/16W	
R430	061T0402103	RST CHIPR 10KOHM +-5% 1/16W	

R431	061T0402103	RST CHIPR 10KOHM +-5% 1/16W	
R432	061T0402103	RST CHIPR 10KOHM +-5% 1/16W	
R433	061T0402103	RST CHIPR 10KOHM +-5% 1/16W	
R434	061T0402103	RST CHIPR 10KOHM +-5% 1/16W	
R435	061T0402103	RST CHIPR 10KOHM +-5% 1/16W	
R436	061T0402103	RST CHIPR 10KOHM +-5% 1/16W	
R437	061T0402103	RST CHIPR 10KOHM +-5% 1/16W	
R438	061T0402103	RST CHIPR 10KOHM +-5% 1/16W	
R439	061T0402103	RST CHIPR 10KOHM +-5% 1/16W	
R440	061T0402103	RST CHIPR 10KOHM +-5% 1/16W	
R441	061T0402103	RST CHIPR 10KOHM +-5% 1/16W	
R467	061T0402103	RST CHIPR 10KOHM +-5% 1/16W	
R551	061T0402103	RST CHIPR 10KOHM +-5% 1/16W	
R533	061T0402103	RST CHIPR 10KOHM +-5% 1/16W	
R531	061T0402103	RST CHIPR 10KOHM +-5% 1/16W	
R530	061T0402103	RST CHIPR 10KOHM +-5% 1/16W	
R529	061T0402103	RST CHIPR 10KOHM +-5% 1/16W	
R524	061T0402103	RST CHIPR 10KOHM +-5% 1/16W	
R523	061T0402103	RST CHIPR 10KOHM +-5% 1/16W	
R518	061T0402103	RST CHIPR 10KOHM +-5% 1/16W	
R517	061T0402103	RST CHIPR 10KOHM +-5% 1/16W	
R511	061T0402103	RST CHIPR 10KOHM +-5% 1/16W	
R505	061T0402103	RST CHIPR 10KOHM +-5% 1/16W	
R502	061T0402103	RST CHIPR 10KOHM +-5% 1/16W	
R501	061T0402103	RST CHIPR 10KOHM +-5% 1/16W	
R553	061T0402103	RST CHIPR 10KOHM +-5% 1/16W	
R483	061T0402103	RST CHIPR 10KOHM +-5% 1/16W	
R484	061T0402103	RST CHIPR 10KOHM +-5% 1/16W	
R485	061T0402103	RST CHIPR 10KOHM +-5% 1/16W	
R486	061T0402103	RST CHIPR 10KOHM +-5% 1/16W	
R487	061T0402103	RST CHIPR 10KOHM +-5% 1/16W	
R489	061T0402103	RST CHIPR 10KOHM +-5% 1/16W	
R493	061T0402103	RST CHIPR 10KOHM +-5% 1/16W	
R496	061T0402103	RST CHIPR 10KOHM +-5% 1/16W	
R497	061T0402103	RST CHIPR 10KOHM +-5% 1/16W	
R499	061T0402103	RST CHIPR 10KOHM +-5% 1/16W	
R495	061T0402103	RST CHIPR 10KOHM +-5% 1/16W	
R494	061T0402103	RST CHIPR 10KOHM +-5% 1/16W	
R570	061T0402103	RST CHIPR 10KOHM +-5% 1/16W	
R427	061T0402103	RST CHIPR 10KOHM +-5% 1/16W	

R177	061T0402103	RST CHIPR 10KOHM +-5% 1/16W	
R176	061T0402103	RST CHIPR 10KOHM +-5% 1/16W	
R169	061T0402103	RST CHIPR 10KOHM +-5% 1/16W	
R168	061T0402103	RST CHIPR 10KOHM +-5% 1/16W	
R167	061T0402103	RST CHIPR 10KOHM +-5% 1/16W	
R166	061T0402103	RST CHIPR 10KOHM +-5% 1/16W	
R115	061T0402103	RST CHIPR 10KOHM +-5% 1/16W	
R114	061T0402103	RST CHIPR 10KOHM +-5% 1/16W	
R113	061T0402103	RST CHIPR 10KOHM +-5% 1/16W	
R112	061T0402103	RST CHIPR 10KOHM +-5% 1/16W	
R103	061T0402103	RST CHIPR 10KOHM +-5% 1/16W	
R102	061T0402103	RST CHIPR 10KOHM +-5% 1/16W	
R422	061T0402103	RST CHIPR 10KOHM +-5% 1/16W	
R414	061T0402103	RST CHIPR 10KOHM +-5% 1/16W	
R409	061T0402103	RST CHIPR 10KOHM +-5% 1/16W	
R406	061T0402103	RST CHIPR 10KOHM +-5% 1/16W	
R404	061T0402103	RST CHIPR 10KOHM +-5% 1/16W	
R284	061T0402103	RST CHIPR 10KOHM +-5% 1/16W	
R283	061T0402103	RST CHIPR 10KOHM +-5% 1/16W	
R282	061T0402103	RST CHIPR 10KOHM +-5% 1/16W	
R281	061T0402103	RST CHIPR 10KOHM +-5% 1/16W	
R230	061T0402103	RST CHIPR 10KOHM +-5% 1/16W	
R228	061T0402103	RST CHIPR 10KOHM +-5% 1/16W	
R199	061T0402103	RST CHIPR 10KOHM +-5% 1/16W	
R534	061T0402104	RST CHIPR 100KOHM +-5% 1/16W	
R528	061T0402104	RST CHIPR 100KOHM +-5% 1/16W	
R527	061T0402104	RST CHIPR 100KOHM +-5% 1/16W	
R423	061T0402104	RST CHIPR 100KOHM +-5% 1/16W	
R408	061T0402104	RST CHIPR 100KOHM +-5% 1/16W	
R116	061T0402104	RST CHIPR 100KOHM +-5% 1/16W	
R198	061T0402105	RST CHIPR 1MOHM +-5% 1/16W	
R535	061T0402105	RST CHIPR 1MOHM +-5% 1/16W	
R197	061T0402105	RST CHIPR 1MOHM +-5% 1/16W	
R532	061T0402123	RST CHIPR 12KOHM +-5% 1/16W	
R507	061T0402153	RST CHIPR 15KOHM +-5% 1/16W	
R513	061T0402153	RST CHIPR 15KOHM +-5% 1/16W	
R520	061T0402153	RST CHIPR 15KOHM +-5% 1/16W	
R521	061T0402153	RST CHIPR 15KOHM +-5% 1/16W	
R525	061T0402153	RST CHIPR 15KOHM +-5% 1/16W	
R526	061T0402153	RST CHIPR 15KOHM +-5% 1/16W	

R580	061T0402200	RST CHIP 20R 1/16W 5%	
R479	061T0402200	RST CHIP 20R 1/16W 5%	
R131	061T0402200	RST CHIP 20R 1/16W 5%	
R222	061T0402200	RST CHIP 20R 1/16W 5%	
R224	061T0402200	RST CHIP 20R 1/16W 5%	
R244	061T0402200	RST CHIP 20R 1/16W 5%	
R245	061T0402200	RST CHIP 20R 1/16W 5%	
R252	061T0402200	RST CHIP 20R 1/16W 5%	
R253	061T0402200	RST CHIP 20R 1/16W 5%	
R256	061T0402200	RST CHIP 20R 1/16W 5%	
R257	061T0402200	RST CHIP 20R 1/16W 5%	
R410	061T0402223	RST CHIPR 22KOHM +-5% 1/16W	
R539	061T0402330	RST CHIPR 33 OHM +-5% 1/16W	
R540	061T0402330	RST CHIPR 33 OHM +-5% 1/16W	
R541	061T0402330	RST CHIPR 33 OHM +-5% 1/16W	
R542	061T0402330	RST CHIPR 33 OHM +-5% 1/16W	
R543	061T0402330	RST CHIPR 33 OHM +-5% 1/16W	
R544	061T0402330	RST CHIPR 33 OHM +-5% 1/16W	
R335	061T0402330	RST CHIPR 33 OHM +-5% 1/16W	
R334	061T0402330	RST CHIPR 33 OHM +-5% 1/16W	
R333	061T0402330	RST CHIPR 33 OHM +-5% 1/16W	
R332	061T0402330	RST CHIPR 33 OHM +-5% 1/16W	
R330	061T0402330	RST CHIPR 33 OHM +-5% 1/16W	
R547	061T0402330	RST CHIPR 33 OHM +-5% 1/16W	
R546	061T0402330	RST CHIPR 33 OHM +-5% 1/16W	
R545	061T0402330	RST CHIPR 33 OHM +-5% 1/16W	
R185	061T0402330	RST CHIPR 33 OHM +-5% 1/16W	
R187	061T0402330	RST CHIPR 33 OHM +-5% 1/16W	
R189	061T0402330	RST CHIPR 33 OHM +-5% 1/16W	
R191	061T0402330	RST CHIPR 33 OHM +-5% 1/16W	
R192	061T0402330	RST CHIPR 33 OHM +-5% 1/16W	
R195	061T0402330	RST CHIPR 33 OHM +-5% 1/16W	
R302	061T0402330	RST CHIPR 33 OHM +-5% 1/16W	
R303	061T0402330	RST CHIPR 33 OHM +-5% 1/16W	
R304	061T0402330	RST CHIPR 33 OHM +-5% 1/16W	
R305	061T0402330	RST CHIPR 33 OHM +-5% 1/16W	
R306	061T0402330	RST CHIPR 33 OHM +-5% 1/16W	
R307	061T0402330	RST CHIPR 33 OHM +-5% 1/16W	
R312	061T0402330	RST CHIPR 33 OHM +-5% 1/16W	
R473	061T0402330	RST CHIPR 33 OHM +-5% 1/16W	

R108	061T0402472	RST CHIPR 4.7KOHM +-5% 1/16W	
R127	061T0402472	RST CHIPR 4.7KOHM +-5% 1/16W	
R129	061T0402472	RST CHIPR 4.7KOHM +-5% 1/16W	
R136	061T0402472	RST CHIPR 4.7KOHM +-5% 1/16W	
R140	061T0402472	RST CHIPR 4.7KOHM +-5% 1/16W	
R142	061T0402472	RST CHIPR 4.7KOHM +-5% 1/16W	
R144	061T0402472	RST CHIPR 4.7KOHM +-5% 1/16W	
R147	061T0402472	RST CHIPR 4.7KOHM +-5% 1/16W	
R150	061T0402472	RST CHIPR 4.7KOHM +-5% 1/16W	
R152	061T0402472	RST CHIPR 4.7KOHM +-5% 1/16W	
R154	061T0402472	RST CHIPR 4.7KOHM +-5% 1/16W	
R161	061T0402472	RST CHIPR 4.7KOHM +-5% 1/16W	
R255	061T0402472	RST CHIPR 4.7KOHM +-5% 1/16W	
R571	061T0402472	RST CHIPR 4.7KOHM +-5% 1/16W	
R572	061T0402472	RST CHIPR 4.7KOHM +-5% 1/16W	
R573	061T0402472	RST CHIPR 4.7KOHM +-5% 1/16W	
R574	061T0402472	RST CHIPR 4.7KOHM +-5% 1/16W	
R575	061T0402472	RST CHIPR 4.7KOHM +-5% 1/16W	
R576	061T0402472	RST CHIPR 4.7KOHM +-5% 1/16W	
R582	061T0402472	RST CHIPR 4.7KOHM +-5% 1/16W	
R583	061T0402472	RST CHIPR 4.7KOHM +-5% 1/16W	
R328	061T0402472	RST CHIPR 4.7KOHM +-5% 1/16W	
R275	061T0402472	RST CHIPR 4.7KOHM +-5% 1/16W	
R490	061T0402750	RST CHIPR 75 OHM +-5% 1/16W	
R186	061T0402750 9F	RST CHIP 75 OHM 1/16W 1%	
R188	061T0402750 9F	RST CHIP 75 OHM 1/16W 1%	
R190	061T0402750 9F	RST CHIP 75 OHM 1/16W 1%	
R193	061T0402750 9F	RST CHIP 75 OHM 1/16W 1%	
R194	061T0402750 9F	RST CHIP 75 OHM 1/16W 1%	
R196	061T0402750 9F	RST CHIP 75 OHM 1/16W 1%	
R246	061T0402750 9F	RST CHIP 75 OHM 1/16W 1%	
R247	061T0402750 9F	RST CHIP 75 OHM 1/16W 1%	
R248	061T0402750 9F	RST CHIP 75 OHM 1/16W 1%	
R249	061T0402750 9F	RST CHIP 75 OHM 1/16W 1%	
R250	061T0402750 9F	RST CHIP 75 OHM 1/16W 1%	
R251	061T0402750 9F	RST CHIP 75 OHM 1/16W 1%	
R313	061T0402750 9F	RST CHIP 75 OHM 1/16W 1%	
R477	061T0402820	RST CHIP 82R 1/16W 5%	
R476	061T0402820	RST CHIP 82R 1/16W 5%	
R475	061T0402820	RST CHIP 82R 1/16W 5%	

R474	061T0402820	RST CHIP 82R 1/16W 5%	
R159	061T0402820	RST CHIP 82R 1/16W 5%	
R158	061T0402820	RST CHIP 82R 1/16W 5%	
R156	061T0402820	RST CHIP 82R 1/16W 5%	
R110	061T0603000	RST CHIPR 0 OHM +-5% 1/10W	
R132	061T0603000	RST CHIPR 0 OHM +-5% 1/10W	
R242	061T0603000	RST CHIPR 0 OHM +-5% 1/10W	
R239	061T0603000	RST CHIPR 0 OHM +-5% 1/10W	
R233	061T0603000	RST CHIPR 0 OHM +-5% 1/10W	
R232	061T0603000	RST CHIPR 0 OHM +-5% 1/10W	
R227	061T0603000	RST CHIPR 0 OHM +-5% 1/10W	
R226	061T0603000	RST CHIPR 0 OHM +-5% 1/10W	
R218	061T0603000	RST CHIPR 0 OHM +-5% 1/10W	
R216	061T0603000	RST CHIPR 0 OHM +-5% 1/10W	
R331	061T0603000	RST CHIPR 0 OHM +-5% 1/10W	
R311	061T0603000	RST CHIPR 0 OHM +-5% 1/10W	
R586	061T0603000	RST CHIPR 0 OHM +-5% 1/10W	
R552	061T0603000	RST CHIPR 0 OHM +-5% 1/10W	
R549	061T0603000	RST CHIPR 0 OHM +-5% 1/10W	
R548	061T0603000	RST CHIPR 0 OHM +-5% 1/10W	
R429	061T0603000	RST CHIPR 0 OHM +-5% 1/10W	
R314	061T0603000	RST CHIPR 0 OHM +-5% 1/10W	
R183	061T0603000	RST CHIPR 0 OHM +-5% 1/10W	
R181	061T0603000	RST CHIPR 0 OHM +-5% 1/10W	
R180	061T0603000	RST CHIPR 0 OHM +-5% 1/10W	
R179	061T0603000	RST CHIPR 0 OHM +-5% 1/10W	
R175	061T0603000	RST CHIPR 0 OHM +-5% 1/10W	
R174	061T0603000	RST CHIPR 0 OHM +-5% 1/10W	
R146	061T0603000	RST CHIPR 0 OHM +-5% 1/10W	
R238	061T0603100	CHIP 10OHM 1/16W	
R236	061T0603100	CHIP 10OHM 1/16W	
R231	061T0603100	CHIP 10OHM 1/16W	
R229	061T0603100	CHIP 10OHM 1/16W	
R225	061T0603100	CHIP 10OHM 1/16W	
R223	061T0603100	CHIP 10OHM 1/16W	
R215	061T0603100	CHIP 10OHM 1/16W	
R214	061T0603100	CHIP 10OHM 1/16W	
R120	061T0603100	CHIP 10OHM 1/16W	
R119	061T0603100	CHIP 10OHM 1/16W	
R587	061T0603101	RST CHIPR 100 OHM +-5% 1/10W	

R411	061T0603102	RST CHIPR 1KOHM +-5% 1/10W	
R413	061T0603102	RST CHIPR 1KOHM +-5% 1/10W	
R416	061T0603102	RST CHIPR 1KOHM +-5% 1/10W	
R584	061T0603102	RST CHIPR 1KOHM +-5% 1/10W	
R585	061T0603102	RST CHIPR 1KOHM +-5% 1/10W	
R280	061T0603102	RST CHIPR 1KOHM +-5% 1/10W	
R538	061T0603222	CHIP 2.2K OHM 1/16W	
R336	061T0603222	CHIP 2.2K OHM 1/16W	
R338	061T0603222	CHIP 2.2K OHM 1/16W	
R337	061T0603222	CHIP 2.2K OHM 1/16W	
R339	061T0603222	CHIP 2.2K OHM 1/16W	
R537	061T0603223	CHIP 22KOHM 1/16W	
R134	061T0603249 0F	RST CHIPR 249 OHM +-1% 1/10W	
R118	061T0603270 0F	RST CHIPR 270 OHM +-1% 1/10W	
R121	061T0603272	CHIP 2.7KOHM 1/16W	
R468	061T0603280 0F	RST CHIPR 280 OHM +-1% 1/10W	
R469	061T0603280 0F	RST CHIPR 280 OHM +-1% 1/10W	
R536	061T0603333	RST CHIPR 33 KOHM +-5% 1/10W	
R592	061T0603333	RST CHIPR 33 KOHM +-5% 1/10W	
R421	061T0603333	RST CHIPR 33 KOHM +-5% 1/10W	
R426	061T0603362	RST CHIPR 3.6 KOHM +-5% 1/10W	
R424	061T0603392	CHIP 3.9KOHM 1/16W	
R207	061T0603470	RST CHIPR 47 OHM +-5% 1/10W	
R209	061T0603470	RST CHIPR 47 OHM +-5% 1/10W	
R217	061T0603470	RST CHIPR 47 OHM +-5% 1/10W	
R219	061T0603470	RST CHIPR 47 OHM +-5% 1/10W	
R220	061T0603470	RST CHIPR 47 OHM +-5% 1/10W	
R221	061T0603470	RST CHIPR 47 OHM +-5% 1/10W	
R204	061T0603470	RST CHIPR 47 OHM +-5% 1/10W	
R206	061T0603470	RST CHIPR 47 OHM +-5% 1/10W	
R419	061T0603471	RST CHIPR 470OHM +-5% 1/10W	
R201	061T0603472	CHIP 4.7KOHM 1/16W	
R202	061T0603472	CHIP 4.7KOHM 1/16W	
R203	061T0603472	CHIP 4.7KOHM 1/16W	
R205	061T0603472	CHIP 4.7KOHM 1/16W	
R208	061T0603472	CHIP 4.7KOHM 1/16W	
R210	061T0603472	CHIP 4.7KOHM 1/16W	
R211	061T0603472	CHIP 4.7KOHM 1/16W	
R212	061T0603472	CHIP 4.7KOHM 1/16W	
R213	061T0603472	CHIP 4.7KOHM 1/16W	

R254	061T0603472	CHIP 4.7KOHM 1/16W	
R258	061T0603472	CHIP 4.7KOHM 1/16W	
R259	061T0603472	CHIP 4.7KOHM 1/16W	
R403	061T0603472	CHIP 4.7KOHM 1/16W	
R591	061T0603472	CHIP 4.7KOHM 1/16W	
R425	061T0603472	CHIP 4.7KOHM 1/16W	
R295	061T0603472	CHIP 4.7KOHM 1/16W	
R278	061T0603472	CHIP 4.7KOHM 1/16W	
R277	061T0603472	CHIP 4.7KOHM 1/16W	
R276	061T0603472	CHIP 4.7KOHM 1/16W	
R270	061T0603472	CHIP 4.7KOHM 1/16W	
R265	061T0603472	CHIP 4.7KOHM 1/16W	
R260	061T0603472	CHIP 4.7KOHM 1/16W	
R117	061T0603472	CHIP 4.7KOHM 1/16W	
R200	061T0603472	CHIP 4.7KOHM 1/16W	
R272	061T0603560	RST CHIPR 56 OHM +-5% 1/10W	
R273	061T0603560	RST CHIPR 56 OHM +-5% 1/10W	
R243	061T0603750	RST CHIPR 75 OHM +-5% 1/10W	
R241	061T0603750	RST CHIPR 75 OHM +-5% 1/10W	
R240	061T0603750	RST CHIPR 75 OHM +-5% 1/10W	
R237	061T0603750	RST CHIPR 75 OHM +-5% 1/10W	
R235	061T0603750	RST CHIPR 75 OHM +-5% 1/10W	
R234	061T0603750	RST CHIPR 75 OHM +-5% 1/10W	
FB401	061T0805000	RST CHIPR 0 OHM +-5% 1/8W	
R405	061T1206000	RST CHIPR 0 OHM +-5% 1/4W	
C269	065G0402104 12	CAP CHIP 0402 0.1UF 16V X7R	
C242	065G0402104 12	CAP CHIP 0402 0.1UF 16V X7R	
C243	065G0402104 12	CAP CHIP 0402 0.1UF 16V X7R	
C244	065G0402104 12	CAP CHIP 0402 0.1UF 16V X7R	
C245	065G0402104 12	CAP CHIP 0402 0.1UF 16V X7R	
C268	065G0402104 12	CAP CHIP 0402 0.1UF 16V X7R	
C267	065G0402104 12	CAP CHIP 0402 0.1UF 16V X7R	
C266	065G0402104 12	CAP CHIP 0402 0.1UF 16V X7R	
C257	065G0402104 12	CAP CHIP 0402 0.1UF 16V X7R	
C256	065G0402104 12	CAP CHIP 0402 0.1UF 16V X7R	
C255	065G0402104 12	CAP CHIP 0402 0.1UF 16V X7R	
C254	065G0402104 12	CAP CHIP 0402 0.1UF 16V X7R	
C253	065G0402104 12	CAP CHIP 0402 0.1UF 16V X7R	
C252	065G0402104 12	CAP CHIP 0402 0.1UF 16V X7R	
C251	065G0402104 12	CAP CHIP 0402 0.1UF 16V X7R	

C250	065G0402104 12	CAP CHIP 0402 0.1UF 16V X7R	
C249	065G0402104 12	CAP CHIP 0402 0.1UF 16V X7R	
C248	065G0402104 12	CAP CHIP 0402 0.1UF 16V X7R	
C247	065G0402104 12	CAP CHIP 0402 0.1UF 16V X7R	
C246	065G0402104 12	CAP CHIP 0402 0.1UF 16V X7R	
C270	065G0402104 12	CAP CHIP 0402 0.1UF 16V X7R	
C271	065G0402104 12	CAP CHIP 0402 0.1UF 16V X7R	
C272	065G0402104 12	CAP CHIP 0402 0.1UF 16V X7R	
C273	065G0402104 12	CAP CHIP 0402 0.1UF 16V X7R	
C274	065G0402104 12	CAP CHIP 0402 0.1UF 16V X7R	
C275	065G0402104 12	CAP CHIP 0402 0.1UF 16V X7R	
C276	065G0402104 12	CAP CHIP 0402 0.1UF 16V X7R	
C723	065T0402101 31	MLCC 0402 100PF J 50V NPO	
C724	065T0402101 31	MLCC 0402 100PF J 50V NPO	
C725	065T0402101 31	MLCC 0402 100PF J 50V NPO	
C239	065T0402103 22	CHIP 0.01UF 25V X7R	
C238	065T0402103 22	CHIP 0.01UF 25V X7R	
C237	065T0402103 22	CHIP 0.01UF 25V X7R	
C701	065T040210322K M	MLCC 0402 CAP 0.01uF 25V X7R	
C519	065T040210322K M	MLCC 0402 CAP 0.01uF 25V X7R	
C477	065T040210322K M	MLCC 0402 CAP 0.01uF 25V X7R	
C474	065T040210322K M	MLCC 0402 CAP 0.01uF 25V X7R	
C472	065T040210322K M	MLCC 0402 CAP 0.01uF 25V X7R	
C470	065T040210322K M	MLCC 0402 CAP 0.01uF 25V X7R	
C467	065T040210322K M	MLCC 0402 CAP 0.01uF 25V X7R	
C465	065T040210322K M	MLCC 0402 CAP 0.01uF 25V X7R	
C464	065T040210322K M	MLCC 0402 CAP 0.01uF 25V X7R	
C441	065T040210322K M	MLCC 0402 CAP 0.01uF 25V X7R	
C440	065T040210322K M	MLCC 0402 CAP 0.01uF 25V X7R	
C439	065T040210322K M	MLCC 0402 CAP 0.01uF 25V X7R	
C437	065T040210322K M	MLCC 0402 CAP 0.01uF 25V X7R	
C435	065T040210322K M	MLCC 0402 CAP 0.01uF 25V X7R	
C430	065T040210322K M	MLCC 0402 CAP 0.01uF 25V X7R	
C428	065T040210322K M	MLCC 0402 CAP 0.01uF 25V X7R	
C427	065T040210322K M	MLCC 0402 CAP 0.01uF 25V X7R	
C473	065T0402104 12	CAP CHIP 0402 0.1UF 16V X7R	
C471	065T0402104 12	CAP CHIP 0402 0.1UF 16V X7R	
C469	065T0402104 12	CAP CHIP 0402 0.1UF 16V X7R	
C468	065T0402104 12	CAP CHIP 0402 0.1UF 16V X7R	
C466	065T0402104 12	CAP CHIP 0402 0.1UF 16V X7R	

C461	065T0402104 12	CAP CHIP 0402 0.1UF 16V X7R	
C460	065T0402104 12	CAP CHIP 0402 0.1UF 16V X7R	
C459	065T0402104 12	CAP CHIP 0402 0.1UF 16V X7R	
C458	065T0402104 12	CAP CHIP 0402 0.1UF 16V X7R	
C457	065T0402104 12	CAP CHIP 0402 0.1UF 16V X7R	
C456	065T0402104 12	CAP CHIP 0402 0.1UF 16V X7R	
C455	065T0402104 12	CAP CHIP 0402 0.1UF 16V X7R	
C454	065T0402104 12	CAP CHIP 0402 0.1UF 16V X7R	
C475	065T0402104 12	CAP CHIP 0402 0.1UF 16V X7R	
C491	065T0402104 12	CAP CHIP 0402 0.1UF 16V X7R	
C490	065T0402104 12	CAP CHIP 0402 0.1UF 16V X7R	
C489	065T0402104 12	CAP CHIP 0402 0.1UF 16V X7R	
C488	065T0402104 12	CAP CHIP 0402 0.1UF 16V X7R	
C487	065T0402104 12	CAP CHIP 0402 0.1UF 16V X7R	
C486	065T0402104 12	CAP CHIP 0402 0.1UF 16V X7R	
C485	065T0402104 12	CAP CHIP 0402 0.1UF 16V X7R	
C484	065T0402104 12	CAP CHIP 0402 0.1UF 16V X7R	
C483	065T0402104 12	CAP CHIP 0402 0.1UF 16V X7R	
C482	065T0402104 12	CAP CHIP 0402 0.1UF 16V X7R	
C481	065T0402104 12	CAP CHIP 0402 0.1UF 16V X7R	
C478	065T0402104 12	CAP CHIP 0402 0.1UF 16V X7R	
C476	065T0402104 12	CAP CHIP 0402 0.1UF 16V X7R	
C432	065T0402104 12	CAP CHIP 0402 0.1UF 16V X7R	
C431	065T0402104 12	CAP CHIP 0402 0.1UF 16V X7R	
C429	065T0402104 12	CAP CHIP 0402 0.1UF 16V X7R	
C424	065T0402104 12	CAP CHIP 0402 0.1UF 16V X7R	
C418	065T0402104 12	CAP CHIP 0402 0.1UF 16V X7R	
C417	065T0402104 12	CAP CHIP 0402 0.1UF 16V X7R	
C414	065T0402104 12	CAP CHIP 0402 0.1UF 16V X7R	
C410	065T0402104 12	CAP CHIP 0402 0.1UF 16V X7R	
C408	065T0402104 12	CAP CHIP 0402 0.1UF 16V X7R	
C407	065T0402104 12	CAP CHIP 0402 0.1UF 16V X7R	
C236	065T0402104 12	CAP CHIP 0402 0.1UF 16V X7R	
C235	065T0402104 12	CAP CHIP 0402 0.1UF 16V X7R	
C227	065T0402104 12	CAP CHIP 0402 0.1UF 16V X7R	
C433	065T0402104 12	CAP CHIP 0402 0.1UF 16V X7R	
C453	065T0402104 12	CAP CHIP 0402 0.1UF 16V X7R	
C452	065T0402104 12	CAP CHIP 0402 0.1UF 16V X7R	
C451	065T0402104 12	CAP CHIP 0402 0.1UF 16V X7R	
C450	065T0402104 12	CAP CHIP 0402 0.1UF 16V X7R	

C449	065T0402104 12	CAP CHIP 0402 0.1UF 16V X7R	
C448	065T0402104 12	CAP CHIP 0402 0.1UF 16V X7R	
C447	065T0402104 12	CAP CHIP 0402 0.1UF 16V X7R	
C446	065T0402104 12	CAP CHIP 0402 0.1UF 16V X7R	
C445	065T0402104 12	CAP CHIP 0402 0.1UF 16V X7R	
C442	065T0402104 12	CAP CHIP 0402 0.1UF 16V X7R	
C438	065T0402104 12	CAP CHIP 0402 0.1UF 16V X7R	
C436	065T0402104 12	CAP CHIP 0402 0.1UF 16V X7R	
C434	065T0402104 12	CAP CHIP 0402 0.1UF 16V X7R	
C492	065T0402104 12	CAP CHIP 0402 0.1UF 16V X7R	
C734	065T0402104 12	CAP CHIP 0402 0.1UF 16V X7R	
C733	065T0402104 12	CAP CHIP 0402 0.1UF 16V X7R	
C731	065T0402104 12	CAP CHIP 0402 0.1UF 16V X7R	
C728	065T0402104 12	CAP CHIP 0402 0.1UF 16V X7R	
C722	065T0402104 12	CAP CHIP 0402 0.1UF 16V X7R	
C719	065T0402104 12	CAP CHIP 0402 0.1UF 16V X7R	
C717	065T0402104 12	CAP CHIP 0402 0.1UF 16V X7R	
C715	065T0402104 12	CAP CHIP 0402 0.1UF 16V X7R	
C714	065T0402104 12	CAP CHIP 0402 0.1UF 16V X7R	
C713	065T0402104 12	CAP CHIP 0402 0.1UF 16V X7R	
C711	065T0402104 12	CAP CHIP 0402 0.1UF 16V X7R	
C709	065T0402104 12	CAP CHIP 0402 0.1UF 16V X7R	
C708	065T0402104 12	CAP CHIP 0402 0.1UF 16V X7R	
C735	065T0402104 12	CAP CHIP 0402 0.1UF 16V X7R	
C535	065T0402104 12	CAP CHIP 0402 0.1UF 16V X7R	
C531	065T0402104 12	CAP CHIP 0402 0.1UF 16V X7R	
C530	065T0402104 12	CAP CHIP 0402 0.1UF 16V X7R	
C529	065T0402104 12	CAP CHIP 0402 0.1UF 16V X7R	
C528	065T0402104 12	CAP CHIP 0402 0.1UF 16V X7R	
C749	065T0402104 12	CAP CHIP 0402 0.1UF 16V X7R	
C746	065T0402104 12	CAP CHIP 0402 0.1UF 16V X7R	
C744	065T0402104 12	CAP CHIP 0402 0.1UF 16V X7R	
C743	065T0402104 12	CAP CHIP 0402 0.1UF 16V X7R	
C742	065T0402104 12	CAP CHIP 0402 0.1UF 16V X7R	
C741	065T0402104 12	CAP CHIP 0402 0.1UF 16V X7R	
C740	065T0402104 12	CAP CHIP 0402 0.1UF 16V X7R	
C739	065T0402104 12	CAP CHIP 0402 0.1UF 16V X7R	
C510	065T0402104 12	CAP CHIP 0402 0.1UF 16V X7R	
C509	065T0402104 12	CAP CHIP 0402 0.1UF 16V X7R	
C508	065T0402104 12	CAP CHIP 0402 0.1UF 16V X7R	

C506	065T0402104 12	CAP CHIP 0402 0.1UF 16V X7R	
C505	065T0402104 12	CAP CHIP 0402 0.1UF 16V X7R	
C504	065T0402104 12	CAP CHIP 0402 0.1UF 16V X7R	
C502	065T0402104 12	CAP CHIP 0402 0.1UF 16V X7R	
C500	065T0402104 12	CAP CHIP 0402 0.1UF 16V X7R	
C499	065T0402104 12	CAP CHIP 0402 0.1UF 16V X7R	
C497	065T0402104 12	CAP CHIP 0402 0.1UF 16V X7R	
C496	065T0402104 12	CAP CHIP 0402 0.1UF 16V X7R	
C495	065T0402104 12	CAP CHIP 0402 0.1UF 16V X7R	
C493	065T0402104 12	CAP CHIP 0402 0.1UF 16V X7R	
C512	065T0402104 12	CAP CHIP 0402 0.1UF 16V X7R	
C706	065T0402104 12	CAP CHIP 0402 0.1UF 16V X7R	
C705	065T0402104 12	CAP CHIP 0402 0.1UF 16V X7R	
C704	065T0402104 12	CAP CHIP 0402 0.1UF 16V X7R	
C702	065T0402104 12	CAP CHIP 0402 0.1UF 16V X7R	
C523	065T0402104 12	CAP CHIP 0402 0.1UF 16V X7R	
C522	065T0402104 12	CAP CHIP 0402 0.1UF 16V X7R	
C521	065T0402104 12	CAP CHIP 0402 0.1UF 16V X7R	
C520	065T0402104 12	CAP CHIP 0402 0.1UF 16V X7R	
C518	065T0402104 12	CAP CHIP 0402 0.1UF 16V X7R	
C517	065T0402104 12	CAP CHIP 0402 0.1UF 16V X7R	
C515	065T0402104 12	CAP CHIP 0402 0.1UF 16V X7R	
C514	065T0402104 12	CAP CHIP 0402 0.1UF 16V X7R	
C513	065T0402104 12	CAP CHIP 0402 0.1UF 16V X7R	
C226	065T0402104 12	CAP CHIP 0402 0.1UF 16V X7R	
C130	065T0402104 12	CAP CHIP 0402 0.1UF 16V X7R	
C131	065T0402104 12	CAP CHIP 0402 0.1UF 16V X7R	
C132	065T0402104 12	CAP CHIP 0402 0.1UF 16V X7R	
C133	065T0402104 12	CAP CHIP 0402 0.1UF 16V X7R	
C134	065T0402104 12	CAP CHIP 0402 0.1UF 16V X7R	
C136	065T0402104 12	CAP CHIP 0402 0.1UF 16V X7R	
C137	065T0402104 12	CAP CHIP 0402 0.1UF 16V X7R	
C138	065T0402104 12	CAP CHIP 0402 0.1UF 16V X7R	
C139	065T0402104 12	CAP CHIP 0402 0.1UF 16V X7R	
C140	065T0402104 12	CAP CHIP 0402 0.1UF 16V X7R	
C141	065T0402104 12	CAP CHIP 0402 0.1UF 16V X7R	
C142	065T0402104 12	CAP CHIP 0402 0.1UF 16V X7R	
C143	065T0402104 12	CAP CHIP 0402 0.1UF 16V X7R	
C145	065T0402104 12	CAP CHIP 0402 0.1UF 16V X7R	
C147	065T0402104 12	CAP CHIP 0402 0.1UF 16V X7R	

C151	065T0402104 12	CAP CHIP 0402 0.1UF 16V X7R	
C152	065T0402104 12	CAP CHIP 0402 0.1UF 16V X7R	
C153	065T0402104 12	CAP CHIP 0402 0.1UF 16V X7R	
C157	065T0402104 12	CAP CHIP 0402 0.1UF 16V X7R	
C129	065T0402104 12	CAP CHIP 0402 0.1UF 16V X7R	
C104	065T0402104 12	CAP CHIP 0402 0.1UF 16V X7R	
C105	065T0402104 12	CAP CHIP 0402 0.1UF 16V X7R	
C106	065T0402104 12	CAP CHIP 0402 0.1UF 16V X7R	
C107	065T0402104 12	CAP CHIP 0402 0.1UF 16V X7R	
C108	065T0402104 12	CAP CHIP 0402 0.1UF 16V X7R	
C109	065T0402104 12	CAP CHIP 0402 0.1UF 16V X7R	
C110	065T0402104 12	CAP CHIP 0402 0.1UF 16V X7R	
C111	065T0402104 12	CAP CHIP 0402 0.1UF 16V X7R	
C113	065T0402104 12	CAP CHIP 0402 0.1UF 16V X7R	
C114	065T0402104 12	CAP CHIP 0402 0.1UF 16V X7R	
C115	065T0402104 12	CAP CHIP 0402 0.1UF 16V X7R	
C116	065T0402104 12	CAP CHIP 0402 0.1UF 16V X7R	
C117	065T0402104 12	CAP CHIP 0402 0.1UF 16V X7R	
C118	065T0402104 12	CAP CHIP 0402 0.1UF 16V X7R	
C119	065T0402104 12	CAP CHIP 0402 0.1UF 16V X7R	
C120	065T0402104 12	CAP CHIP 0402 0.1UF 16V X7R	
C121	065T0402104 12	CAP CHIP 0402 0.1UF 16V X7R	
C122	065T0402104 12	CAP CHIP 0402 0.1UF 16V X7R	
C128	065T0402104 12	CAP CHIP 0402 0.1UF 16V X7R	
C184	065T0402104 12	CAP CHIP 0402 0.1UF 16V X7R	
C185	065T0402104 12	CAP CHIP 0402 0.1UF 16V X7R	
C186	065T0402104 12	CAP CHIP 0402 0.1UF 16V X7R	
C187	065T0402104 12	CAP CHIP 0402 0.1UF 16V X7R	
C210	065T0402104 12	CAP CHIP 0402 0.1UF 16V X7R	
C211	065T0402104 12	CAP CHIP 0402 0.1UF 16V X7R	
C212	065T0402104 12	CAP CHIP 0402 0.1UF 16V X7R	
C213	065T0402104 12	CAP CHIP 0402 0.1UF 16V X7R	
C214	065T0402104 12	CAP CHIP 0402 0.1UF 16V X7R	
C215	065T0402104 12	CAP CHIP 0402 0.1UF 16V X7R	
C216	065T0402104 12	CAP CHIP 0402 0.1UF 16V X7R	
C217	065T0402104 12	CAP CHIP 0402 0.1UF 16V X7R	
C218	065T0402104 12	CAP CHIP 0402 0.1UF 16V X7R	
C219	065T0402104 12	CAP CHIP 0402 0.1UF 16V X7R	
C220	065T0402104 12	CAP CHIP 0402 0.1UF 16V X7R	
C221	065T0402104 12	CAP CHIP 0402 0.1UF 16V X7R	

C222	065T0402104 12	CAP CHIP 0402 0.1UF 16V X7R	
C224	065T0402104 12	CAP CHIP 0402 0.1UF 16V X7R	
C225	065T0402104 12	CAP CHIP 0402 0.1UF 16V X7R	
C183	065T0402104 12	CAP CHIP 0402 0.1UF 16V X7R	
C158	065T0402104 12	CAP CHIP 0402 0.1UF 16V X7R	
C159	065T0402104 12	CAP CHIP 0402 0.1UF 16V X7R	
C165	065T0402104 12	CAP CHIP 0402 0.1UF 16V X7R	
C166	065T0402104 12	CAP CHIP 0402 0.1UF 16V X7R	
C167	065T0402104 12	CAP CHIP 0402 0.1UF 16V X7R	
C168	065T0402104 12	CAP CHIP 0402 0.1UF 16V X7R	
C169	065T0402104 12	CAP CHIP 0402 0.1UF 16V X7R	
C170	065T0402104 12	CAP CHIP 0402 0.1UF 16V X7R	
C171	065T0402104 12	CAP CHIP 0402 0.1UF 16V X7R	
C172	065T0402104 12	CAP CHIP 0402 0.1UF 16V X7R	
C173	065T0402104 12	CAP CHIP 0402 0.1UF 16V X7R	
C174	065T0402104 12	CAP CHIP 0402 0.1UF 16V X7R	
C175	065T0402104 12	CAP CHIP 0402 0.1UF 16V X7R	
C176	065T0402104 12	CAP CHIP 0402 0.1UF 16V X7R	
C178	065T0402104 12	CAP CHIP 0402 0.1UF 16V X7R	
C179	065T0402104 12	CAP CHIP 0402 0.1UF 16V X7R	
C180	065T0402104 12	CAP CHIP 0402 0.1UF 16V X7R	
C181	065T0402104 12	CAP CHIP 0402 0.1UF 16V X7R	
C182	065T0402104 12	CAP CHIP 0402 0.1UF 16V X7R	
C730	065T0402220 31	CHIP 22PF 50V NPO	
C729	065T0402220 31	CHIP 22PF 50V NPO	
C156	065T0402220 31	CHIP 22PF 50V NPO	
C155	065T0402220 31	CHIP 22PF 50V NPO	
C161	065T0402330 31	33PF +-50% 50V NPO	
C162	065T0402330 31	33PF +-50% 50V NPO	
C223	065T0402330 31	33PF +-50% 50V NPO	
C228	065T0402330 31	33PF +-50% 50V NPO	
C229	065T0402330 31	33PF +-50% 50V NPO	
C230	065T0402330 31	33PF +-50% 50V NPO	
C277	065T0402330 31	33PF +-50% 50V NPO	
C405	065T0603105 12	CHIP 1UF 16V X7R	
C726	065T0603105 12	CHIP 1UF 16V X7R	
C527	065T0603105 12	CHIP 1UF 16V X7R	
C536	065T0603105 12	CHIP 1UF 16V X7R	
C750	065T0603105 12	CHIP 1UF 16V X7R	
C526	065T0603222 22	MLCC 0603 2200PF K 25V X7R	

C234	065T0603224 17	CHIP 0.22UF 16V Y5V	
C278	065T0603224 17	CHIP 0.22UF 16V Y5V	
C279	065T0603224 17	CHIP 0.22UF 16V Y5V	
C188	065T0603224 17	CHIP 0.22UF 16V Y5V	
C189	065T0603224 17	CHIP 0.22UF 16V Y5V	
C191	065T0603224 17	CHIP 0.22UF 16V Y5V	
C192	065T0603224 17	CHIP 0.22UF 16V Y5V	
C727	065T0603224 17	CHIP 0.22UF 16V Y5V	
C525	065T0603300 31	CHIP 0603 30PF J 50V NPO	
C524	065T0603300 31	CHIP 0603 30PF J 50V NPO	
C154	065T0603472 32	CHIP 4700PF 50V X7R	
C404	065T0603683 32	CHIP 0.068UF 50V X7R	
U413	070GHDCP500HDC	HDCP CODE	
FB705	071T 56D121 JA	CHIP BEAD 120 OHM 0805 1A	
L413	071T 56D121 JA	CHIP BEAD 120 OHM 0805 1A	
L402	071T 56D121 JA	CHIP BEAD 120 OHM 0805 1A	
FB107	071T 56D121 JA	CHIP BEAD 120 OHM 0805 1A	
FB106	071T 56D121 JA	CHIP BEAD 120 OHM 0805 1A	
FB105	071T 56D121 JA	CHIP BEAD 120 OHM 0805 1A	
FB103	071T 56D121 JA	CHIP BEAD 120 OHM 0805 1A	
FB104	071T 56K121	CHIP BEAD 120OHM	
FB114	071T 56K121	CHIP BEAD 120OHM	
FB119	071T 56K121	CHIP BEAD 120OHM	
FB701	071T 56K121	CHIP BEAD 120OHM	
FB702	071T 56K121	CHIP BEAD 120OHM	
FB703	071T 56K121	CHIP BEAD 120OHM	
FB704	071T 56K121	CHIP BEAD 120OHM	
FB706	071T 56K121	CHIP BEAD 120OHM	
L410	071T 56K121	CHIP BEAD 120OHM	
L201	071T 56Z601	CHIP BEAD 600 OHM	
L412	071T 56Z601	CHIP BEAD 600 OHM	
L411	071T 56Z601	CHIP BEAD 600 OHM	
L409	071T 56Z601	CHIP BEAD 600 OHM	
L408	071T 56Z601	CHIP BEAD 600 OHM	
L407	071T 56Z601	CHIP BEAD 600 OHM	
L406	071T 56Z601	CHIP BEAD 600 OHM	
L405	071T 56Z601	CHIP BEAD 600 OHM	
L404	071T 56Z601	CHIP BEAD 600 OHM	
L403	071T 56Z601	CHIP BEAD 600 OHM	
FB108	071T 56Z601	CHIP BEAD 600 OHM	

FB101	071T 59C300	CHIP BEAD 30 OHM 0603	
FB109	071T 59C300	CHIP BEAD 30 OHM 0603	
FB110	071T 59C300	CHIP BEAD 30 OHM 0603	
FB111	071T 59C300	CHIP BEAD 30 OHM 0603	
FB112	071T 59C300	CHIP BEAD 30 OHM 0603	
FB113	071T 59C300	CHIP BEAD 30 OHM 0603	
L708	071T 62E11A	CHIP BEAD 115OHM 1812	
L707	073T253S 6 K	SMD CHOKE 90 ohm WCM2012D-900T	
L706	073T253S 6 K	SMD CHOKE 90 ohm WCM2012D-900T	
L705	073T253S 6 K	SMD CHOKE 90 ohm WCM2012D-900T	
L704	073T253S 6 K	SMD CHOKE 90 ohm WCM2012D-900T	
L703	073T253S 6 K	SMD CHOKE 90 ohm WCM2012D-900T	
L702	073T253S 6 K	SMD CHOKE 90 ohm WCM2012D-900T	
L701	073T253S 6 K	SMD CHOKE 90 ohm WCM2012D-900T	
CN108	088T 340 19CHA	HDMI HEADER 19P 0471518121	
CN101	088T 34320A HJ	DP CONNECTOR 20P P0.5mm	
D119	093G 6433P	BAV99	
D120	093G 6433P	BAV99	
D121	093G 6433P	BAV99	
D122	093G 6433P	BAV99	
D123	093G 6433P	BAV99	
D124	093G 6433P	BAV99	
D125	093G 6433P	BAV99	
D126	093G 6433P	BAV99	
D118	093G 6433P	BAV99	
D117	093G 6433P	BAV99	
D116	093G 6433P	BAV99	
D115	093G 6433P	BAV99	
D114	093G 6433P	BAV99	
D113	093G 6433P	BAV99	
D112/ D111	093G 6433P	BAV99	
D145	093G 6433P	BAV99	
D144	093G 6433P	BAV99	

D143	093G 6433P	BAV99	
D142	093G 6433P	BAV99	
D141	093G 6433P	BAV99	
D140	093G 6433P	BAV99	
D139	093G 6433P	BAV99	
D138	093G 6433P	BAV99	
D137	093G 6433P	BAV99	
D136	093G 6433P	BAV99	
D135	093G 6433P	BAV99	
D101	093T 60230	BAT54C BY MCC	
D109	093T 64 42 P	BAV70 SOT23	
D108	093T 64 42 P	BAV70 SOT23	
ZD116	093T 64 49 SU	EGA10603V05A1-B	
ZD115	093T 64 49 SU	EGA10603V05A1-B	
ZD715	093T 64 49 SU	EGA10603V05A1-B	
ZD714	093T 64 49 SU	EGA10603V05A1-B	
ZD713	093T 64 49 SU	EGA10603V05A1-B	
ZD712	093T 64 49 SU	EGA10603V05A1-B	
ZD711	093T 64 49 SU	EGA10603V05A1-B	
ZD710	093T 64 49 SU	EGA10603V05A1-B	
ZD709	093T 64 49 SU	EGA10603V05A1-B	
ZD708	093T 64 49 SU	EGA10603V05A1-B	
ZD707	093T 64 49 SU	EGA10603V05A1-B	
ZD706	093T 64 49 SU	EGA10603V05A1-B	
ZD705	093T 64 49 SU	EGA10603V05A1-B	
ZD704	093T 64 49 SU	EGA10603V05A1-B	
ZD703	093T 64 49 SU	EGA10603V05A1-B	
ZD702	093T 64 49 SU	EGA10603V05A1-B	
ZD701	093T 64 49 SU	EGA10603V05A1-B	
D106	093T 6433P	BAV99	
D105	093T 6433P	BAV99	
D104	093T 6433P	BAV99	
D103	093T 6433P	BAV99	
D102	093T 6433P	BAV99	
D107	093T 6433P	BAV99	
D110	093T 6433P	BAV99	
X101	093T 22S64B H	HSX840GA 27.0000MHZ	
X701	093T 22S909 E	CRYSTAL 24MHZ 20P SMD-49 85degree	
ZD101	093T 39S 24 T	RLZ 5.6B LLDS	

ZD102	093T 39S 24 T	RLZ 5.6B LLDS	
ZD103	093T 39S 24 T	RLZ 5.6B LLDS	
ZD104	093T 39S 24 T	RLZ 5.6B LLDS	
ZD105	093T 39S 24 T	RLZ 5.6B LLDS	
ZD106	093T 39S 24 T	RLZ 5.6B LLDS	
ZD107	093T 39S 24 T	RLZ 5.6B LLDS	
ZD120	093T 39S 24 T	RLZ 5.6B LLDS	
ZD121	093T 39S 24 T	RLZ 5.6B LLDS	
ZD122	093T 39S 24 T	RLZ 5.6B LLDS	
ZD119	093T 39S 24 T	RLZ 5.6B LLDS	
ZD118	093T 39S 24 T	RLZ 5.6B LLDS	
ZD117	093T 39S 24 T	RLZ 5.6B LLDS	
ZD113	093T 39S 24 T	RLZ 5.6B LLDS	
ZD112	093T 39S 24 T	RLZ 5.6B LLDS	
ZD111	093T 39S 24 T	RLZ 5.6B LLDS	
ZD110	093T 39S 24 T	RLZ 5.6B LLDS	
ZD109	093T 39S 24 T	RLZ 5.6B LLDS	
ZD108	093T 39S 24 T	RLZ 5.6B LLDS	
D402	093T 60S 31 T	DIODE B360B 3A/60V SMB	
D401	093T1020 1 S	DIODE GS1D PAN JIT	
	715T2972 G	Main-PCB FR-4 240.0x135.0x1.6mm	
	Q90T0116101 A	HEAT SINK	
	Q90T0152 1	HEAT SINK	
	Q90T8007 1A	HEAT SINK	
	KEPF8QA4	KEY BOARD T2958-D-X-X-1-080304	
CN101	089T 76E 8 1	FFC CABLE 8P 500mm P1.0	
R001	061T0603103	RST CHIPR 10KOHM +-5% 1/10W	
R002	061T0603103	RST CHIPR 10KOHM +-5% 1/10W	
R003	061T0603103	RST CHIPR 10KOHM +-5% 1/10W	
R004	061T0603203	CHIPR 20K OHM+-5% 1/10W	
R005	061T0603203	CHIPR 20K OHM+-5% 1/10W	
R006	061T0603203	CHIPR 20K OHM+-5% 1/10W	
SW007	077T 604 6 TO	bCHIP TACT SW TS-9-TMG-534	
SW006	077T 604 6 TO	bCHIP TACT SW TS-9-TMG-534	
SW005	077T 604 6 TO	bCHIP TACT SW TS-9-TMG-534	
SW004	077T 604 6 TO	bCHIP TACT SW TS-9-TMG-534	
SW003	077T 604 6 TO	bCHIP TACT SW TS-9-TMG-534	
SW001	077T 604 6 TO	bCHIP TACT SW TS-9-TMG-534	
SW002	077T 604 6 TO	bCHIP TACT SW TS-9-TMG-534	
LED001	081T 14501 KT	LED KL-121SYSGC-5MA	

ZD004	093T 39S 34 T	UDZSNP5.6B ROHM	
ZD005	093T 39S 34 T	UDZSNP5.6B ROHM	
ZD006	093T 39S 34 T	UDZSNP5.6B ROHM	
ZD002	093T 39S 34 T	UDZSNP5.6B ROHM	
ZD003	093T 39S 34 T	UDZSNP5.6B ROHM	
ZD001	093T 39S 34 T	UDZSNP5.6B ROHM	
	715T2958 1	KEY BOARD PCB FR-4 220.0x10.5x0.8mm 1OZ D/S	
	Q20J6045 1	AL ALLOY	
	Q23T3178690 9A	HP LOGO	
	Q23T317869011A	HP LOGO	
	Q40T 24N690 1A	Rating label	
	Q40T0001690 2A	CARTON LABEL	
	Q41T160069063B	DOCKIT 468612-AA2	
	Q41T7800690A57	CARD 372838-003	
	Q41T7800690A61	RTF CARD 407430-004	
	Q41T7800690B53	QSG 481040-B22	
	Q44TK009101	EPS(L)	
	Q44TK009201	EPS(R)	
	Q44TK009690 1A	24 HP CARTON	
	Q44TK009BLO 1A	PAPER SHEET	
	Q45G 77 5	PE PACKING	
	Q45T 88606 23	pe bag	
	Q45T 88609144	epe bag	
	Q45T 88609157	EPE BAG	
	Q52T6025 13187	INSULATE SHEET	
	USBF8QA1	USB BOARD G2952-B-X-X-1-080311	
CN761	088G 352 2 TN	USB CONN	
CN762	088G 352 2 TN	USB CONN	
CN760	095T 82010D510	WIRE HARNESS 10P(SAN)-8P	2nd source
CN760	095T 82010X510	WIRE HARNESS 10P(SAN)-8P	
C760	065T0603104 12	MLCC 0603 0.1UF K 16V X7R	
C761	065T0603104 12	MLCC 0603 0.1UF K 16V X7R	
	715G2952 1	USB BOARD PCB	

14. Different Parts List

Diversity of J248GGDBW9HF2N compared with J248GGDKW9HPNN			
Location	**Part No.**	**Description**	**Remark**
	040T 581654 3A	CARTON LABEL	
	Q44T600024H 3A	CARTON	
	Q44TK009690 4A	24 HP CARTON	
	Q45T 88609111	EPE BAG	
	040T 581 26646	S/N LABEL	
	040T 581654 3A	CARTON LABEL	
	Q40T 582813 3A	S/N LABEL	
	Q44T352162411A	CARTON	
	Q45T 88609142	EPE COVER	
E08901	089T404A19N IS	POWER CORD 1.9M	
E08901	089T404A19N LS	POWER CORD 1.9M	
	705TQ8SK086	24" HP SKD ASS'Y	
	705TQ8SK087	24" HP BEZEL ASS'Y	
	Q07G 8 1 11	COMPOUND PALLET	
	Q40G000162410A	S/N LABEL	
	Q40G000162411A	S/N LABEL	
	Q40T 24N690 2A	Rating label	
	Q41T160069064C	DOCKIT 468612-A22	
	Q44T600024D 3A	CARTON	

Diversity of J248GGDBW9HA2N compared with J248GGDKW9HPNN			
Location	**Part No.**	**Description**	**Remark**
	040T 581 26646	S/N LABEL	
	Q44T600024H 4A	CARTON	
	Q45T 99606 25 ESD	insulating pe bag	
	040T 581 26646	S/N LABEL	
	Q44T352162411A	CARTON	
	Q45T 88609142	EPE COVER	
	Q44T600022H 5A	SKD CARTON	
	Q45T 99606 25 ESD	insulating pe bag	
	040T 581 26646	S/N LABEL	
	Q44T600042V 2A	CARTON FOR TUNER BOARD	
	Q45T 99606 25 ESD	insulating pe bag	
E08901	089T404A19N IS	POWER CORD 1.9M	
E08901	089T404A19N LS	POWER CORD 1.9M	
	Q07T 8 1 11	COMPOUND PALLET	