# HCD-ZX66i/ZX99i

# SERVICE MANUAL

**Ver. 1.0 2009.02**

*US Model*
*HCD-ZX66i/ZX99i*

*Canadian Model*
*HCD-ZX66i*

- HCD-ZX66i/ZX99i are the tuner, iPod, CD and amplifier section in LBT-ZX66i/ZX99i.

Photo: HCD-ZX99i

| | | |
|---|---|---|
| CD Section | Model Name Using Similar Mechanism | HCD-ZX9 |
| | CD Mechanism Type | CDM79B-F1BD81 |
| | Base Unit Name | BU-F1BD81A |
| | Optical Pick-up Name | KSM-215DCP/C2NP |

## SPECIFICATIONS

### AUDIO POWER SPECIFICATIONS

POWER OUTPUT AND TOTAL HARMONIC DISTORTION:
HCD-ZX99i:
With 6-ohm loads, both channels driven, from 120 Hz – 10 kHz; rates 200 watts per channel minimum RMS power, with no more than 0.7 % total harmonic distortion from 250 miliwatts to rated output.
HCD-ZX66i US model:
With 6-ohm loads, per channel driven, from 120 Hz – 10 kHz; rates 220 watts per channel minimum RMS power, with no more than 0.7 % total harmonic distortion from 250 miliwatts to rated output.

### Amplifier section

HCD-ZX99i:
The following are measured at
AC 120 V, 60 Hz
Front/Surround speaker
Power output (rated):
270 W + 270 W (at 6 Ω, 1 kHz, 10 % THD)
RMS output power (reference):
180 W × 2 + 180 W × 2 (6 Ω at 1 kHz, 10 % THD)
HCD-ZX66i
The following are measured at
AC 120 V, 60 Hz
Front speaker
Power output (rated):
280 W (at 6 Ω, 1 kHz, 10 % THD)
RMS output power (reference):
210 W × 2 (6 Ω at 1 kHz, 10 % THD)

Inputs
PHONO IN L/R:
Sensitivity 3 mV, impedance 47 kilohms
MIC 1/MIC 2:
Sensitivity 1 mV, impedance 10 kilohms
GAME INPUT AUDIO L/R:
Sensitivity 250 mV, impedance 47 kilohms
GAME INPUT VIDEO:
1 Vp-p, 75 Ω
PC IN L/R:
Sensitivity 250 mV, impedance 47 kilohms
Outputs
PHONES:
accepts headphones of 8 Ω or more
VIDEO OUT:
max. output level 1 Vp-p, load impedance 75 ohms

– Continued on next page –

## COMPONENT Hi-Fi STEREO SYSTEM

**9-889-432-01**
2009B04-1
© 2009.02

**Sony Corporation**
**Audio&Video Business Group**
**Published by Sony Techno Create Corporation**

SONY®

### Disc player section

System
Compact disc and digital audio system
Laser
Semiconductor laser
(λ = 780 nm)
Emission duration: continuous
Laser Output
Max. 44.6 μW*
* This output is the value measured at a distance of 200 mm from the objective lens surface on the Optical Pick-up Block with 7 mm aperture.
Frequency response
2 Hz - 20 kHz (±1.0 dB)
Wave length
780 - 790 nm
Signal-to-noise ratio
More than 90 dB
Dynamic range
More than 90 dB
CD DIGITAL OUT OPTICAL:
Wave length 660 nm, output level
–18 dBm

### Tuner section

FM stereo, FM/AM superheterodyne tuner

### FM tuner section

Tuning range
87.5 - 108.0 MHz (100 kHz step)
Antenna
FM lead antenna
Antenna terminals
75 ohms unbalanced
Intermediate frequency
10.7 MHz

### AM tuner section

Tuning range
530 - 1,710 kHz (with the interval set at 10 kHz)
531 - 1,710 kHz (with the interval set at 9 kHz)
Antenna
AM loop antenna
Antenna terminals
External antenna terminal
Intermediate frequency
450 kHz

### iPod section

DC 5 V 500 mA MAX

### General

Power requirements
120 V AC, 60 Hz
Power consumption
HCD-ZX99i (US model):
400 W
HCD-ZX66i (US model):
230 W
HCD-ZX66i (Canadian model):
240 VA
Dimensions (w/h/d) (Approx.)
HCD-ZX99i/HCD-ZX66i:
361.4 × 435.5 × 454.6 mm
(14 1/4 × 17 1/4 × 18 inches)
Mass (Approx.)
HCD-ZX99i: 19.0 kg (41 lb 15 oz)
HCD-ZX66i: 14.6 kg (32 lb 4 oz)
Supplied accessories
Remote Commander (1)
R6 (size AA) batteries (2)
AM loop antenna (1)
FM lead antenna (1)
Speaker pads:
•HCD-ZX99i only (16)
•HCD-ZX66i only (8)
Speaker cords:
•HCD-ZX99i only
–grey (10 m) (39 3/8 ft) (2)
–white (3 m) (11 7/8 ft) (2)
•HCD-ZX66i only
–3 m (11 7/8 ft) (2)

Design and specifications are subject to change without notice.

- Standby power consumption: 0.5 W
- Halogenated flame retardants are not used in the certain printed wiring boards.

**SAFETY-RELATED COMPONET WARNING!**

**COMPONENTS IDENTIFIED BY MARK ⚠ OR DOTTED LINE WITH MARK ⚠ ON THE SCHEMATIC DIAGRAMS AND IN THE PARTS LIST ARE CRITICAL TO SAFE OPERATION. REPLACE THESE COMPONENTS WITH SONY PARTS WHOSE PART NUMBERS APPEAR AS SHOWN IN THIS MANUAL OR IN SUPPLEMENTS PUBLISHED BY SONY.**

**ATTENTION AU COMPOSANT AYANT RAPPORT À LA SÉCURITÉ!**

**LES COMPOSANTS IDENTIFIÉS PAR UNE MARQUE ⚠ SUR LES DIAGRAMMES SCHÉMATIQUES ET LA LISTE DES PIÈCES SONT CRITIQUES POUR LA SÉCURITÉ DE FONCTIONNEMENT. NE REMPLACER CES COMPOSANTS QUE PAR DES PIÈCES SONY DONT LES NUMÉROS SONT DONNÉS DANS CE MANUEL OU DANS LES SUPPLÉMENTS PUBLIÉS PAR SONY.**

### NOTES ON CHIP COMPONENT REPLACEMENT

- Never reuse a disconnected chip component.
- Notice that the minus side of a tantalum capacitor may be damaged by heat.

### FLEXIBLE CIRCUIT BOARD REPAIRING

- Keep the temperature of soldering iron around 270 °C during repairing.
- Do not touch the soldering iron on the same conductor of the circuit board (within 3 times).
- Be careful not to apply force on the conductor when soldering or unsoldering.

### UNLEADED SOLDER

Boards requiring use of unleaded solder are printed with the lead-free mark (LF) indicating the solder contains no lead.
(**Caution:** Some printed circuit boards may not come printed with the lead free mark due to their particular size)

### : LEAD FREE MARK

Unleaded solder has the following characteristics.

- Unleaded solder melts at a temperature about 40 °C higher than ordinary solder.
  Ordinary soldering irons can be used but the iron tip has to be applied to the solder joint for a slightly longer time.
  Soldering irons using a temperature regulator should be set to about 350 °C.
  **Caution:** The printed pattern (copper foil) may peel away if the heated tip is applied for too long, so be careful!
- Strong viscosity
  Unleaded solder is more viscous (sticky, less prone to flow) than ordinary solder so use caution not to let solder bridges occur such as on IC pins, etc.
- Usable with ordinary solder
  It is best to use only unleaded solder but unleaded solder may also be added to ordinary solder.

**CAUTION**
Use of controls or adjustments or performance of procedures other than those specified herein may result in hazardous radiation exposure.

### NOTES ON HANDLING THE OPTICAL PICK-UP BLOCK OR BASE UNIT

The laser diode in the optical pick-up block may suffer electrostatic break-down because of the potential difference generated by the charged electrostatic load, etc. on clothing and the human body.
During repair, pay attention to electrostatic break-down and also use the procedure in the printed matter which is included in the repair parts.
The flexible board is easily damaged and should be handled with care.

### NOTES ON LASER DIODE EMISSION CHECK

The laser beam on this model is concentrated so as to be focused on the disc reflective surface by the objective lens in the optical pickup block. Therefore, when checking the laser diode emission, observe from more than 30 cm away from the objective lens.

### SAFETY CHECK-OUT (US MODEL)

After correcting the original service problem, perform the following safety check before releasing the set to the customer:
Check the antenna terminals, metal trim, “metallized” knobs, screws, and all other exposed metal parts for AC leakage.
Check leakage as described below.

### LEAKAGE TEST

The AC leakage from any exposed metal part to earth ground and from all exposed metal parts to any exposed metal part having a return to chassis, must not exceed 0.5 mA (500 microamperes.).
Leakage current can be measured by any one of three methods.

1. A commercial leakage tester, such as the Simpson 229 or RCA WT-540A. Follow the manufacturers’ instructions to use these instruments.
2. A battery-operated AC milliammeter. The Data Precision 245 digital multimeter is suitable for this job.
3. Measuring the voltage drop across a resistor by means of a VOM or battery-operated AC voltmeter. The “limit” indication is 0.75 V, so analog meters must have an accurate low-voltage scale. The Simpson 250 and Sanwa SH-63Trd are examples of a passive VOM that is suitable. Nearly all battery operated digital multimeters that have a 2 V AC range are suitable. (See Fig. A)

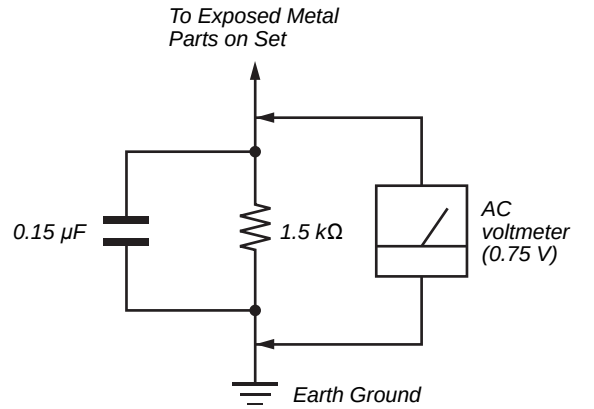


***Fig. A. Using an AC voltmeter to check AC leakage.***

### Note on DualDiscs

A DualDisc is a two sided disc product which mates DVD recorded material on one side with digital audio material on the other side. However, since the audio material side does not conform to the Compact Disc (CD) standard, playback on this product is not guaranteed.

### Music discs encoded with copyright protection technologies

This product is designed to play back discs that conform to the Compact Disc (CD) standard. Recently, various music discs encoded with copyright protection technologies are marketed by some record companies. Please be aware that among those discs, there are some that do not conform to the CD standard and may not be playable by this product.

### Note on Multi Session disc

When you play back Multi Session discs with different formats for each session, the format of the first session is recognized as the disc type. Tracks in the second and subsequent sessions are played back if they are the same formats as the first session.
MPEG Layer-3 audio coding technology and patents licensed from Fraunhofer IIS and Thomson.
iPod is a trademark of Apple Inc., registered in the U.S. and other countries.

### MODEL IDENTIFICATION
### -Back Panel-

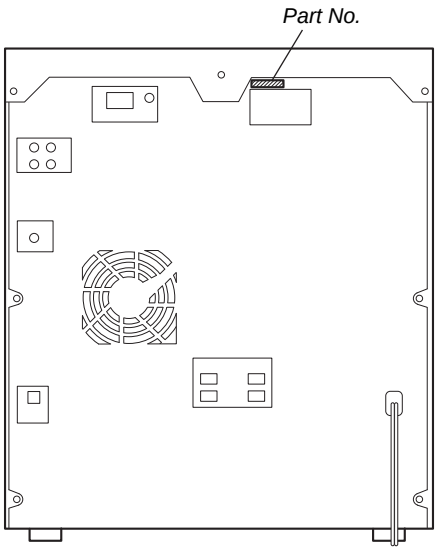


| Model | Part No. |
|---|---|
| HCD-ZX99i: US | 2-649-004-4□ |
| HCD-ZX66i: US | 2-649-004-5□ |
| HCD-ZX66i: Canadian | 2-649-004-6□ |

## TABLE OF CONTENTS


**1. SERVICE NOTE**
1-1. Service Position of CD BU Block ..... 6
1-2. Service Position of PANEL COM Board..... 7
1-3. Service Position of POWER AMP Board..... 8
1-4. Service Position of CD Changer..... 8

**2. GENERAL**
Guide to parts and controls ..... 9

**3. DISASSEMBLY**
3-1. Case..... 18
3-2. Loading Panel ..... 18
3-3. Front Panel Section..... 19
3-4. GAME HP Board, MIC Board..... 19
3-5. Back Panel Section ..... 20
3-6. Boards Section ..... 20
3-7. CD Mechanism Section ..... 21
3-8. MAIN Board..... 21
3-9. Table Assy..... 22
3-10. SE-130 Board..... 22
3-11. TD Belt ..... 23
3-12. DC Motor (M901)..... 23
3-13. Optical Pick-up ..... 24
3-14. BD81A Board ..... 24

**4. TEST MODE** ..... 25

**5. ELECTRICAL ADJUSTMENTS** ..... 28

**6. DIAGRAMS**
6-1. Block Diagram –CD Servo Section– ..... 31
6-2. Block Diagram –Main Section– ..... 32
6-3. Block Diagram –Display/Power Section– ..... 33
6-4. Printed Wiring Board –BD Section– ..... 34
6-5. Schematic Diagram –BD Section– ..... 35
6-6. Printed Wiring Boards –Loading Section– ..... 36
6-7. Schematic Diagram –Loading Section– ..... 37
6-8. Printed Wiring Board –Main Section–..... 38
6-9. Schematic Diagram –Main Section (1/3)–..... 39
6-10. Schematic Diagram –Main Section (2/3)–..... 40
6-11. Schematic Diagram –Main Section (3/3)–..... 41
6-12. Printed Wiring Boards –Panel Section–..... 42
6-13. Schematic Diagram –Panel Section– ..... 43
6-14. Printed Wiring Board –IPOD Section–..... 44
6-15. Schematic Diagram –IPOD Section– ..... 45
6-16. Printed Wiring Boards –Jack Section– ..... 46
6-17. Schematic Diagram –Jack Section–..... 47
6-18. Printed Wiring Boards –Volume Section– ..... 48
6-19. Schematic Diagram –Volume Section– ..... 49
6-20. Printed Wiring Boards –Left Button Section–..... 50
6-21. Schematic Diagram –Left Button Section– ..... 51
6-22. Printed Wiring Boards –Right Button Section–..... 52
6-23. Schematic Diagram –Right Button Section– ..... 53
6-24. Printed Wiring Board –Surround Section (HCD-ZX99i)–..... 54
6-25. Schematic Diagram –Surround Section (HCD-ZX99i)–..... 55
6-26. Printed Wiring Board –Power Amp Section– ..... 56
6-27. Schematic Diagram –Power Amp Section–..... 57
6-28. Printed Wiring Boards –Transformer Section–..... 58
6-29. Schematic Diagram –Transformer Section– ..... 59

**7. EXPLODED VIEWS**
7-1. Back Panel Section ..... 71
7-2. Front Panel Section (1) ..... 72
7-3. Front Panel Section (2) ..... 73
7-4. Chassis Section ..... 74
7-5. CD Mechanism Section (1) (CDM79B-F1BD81)..... 75
7-6. CD Mechanism Section (2) (CDM79B-F1BD81)..... 76

**8. ELECTRICAL PARTS LIST** ..... 77

# SECTION 1
# SERVICE NOTE

## 1-1. SERVICE POSITION OF CD BU BLOCK

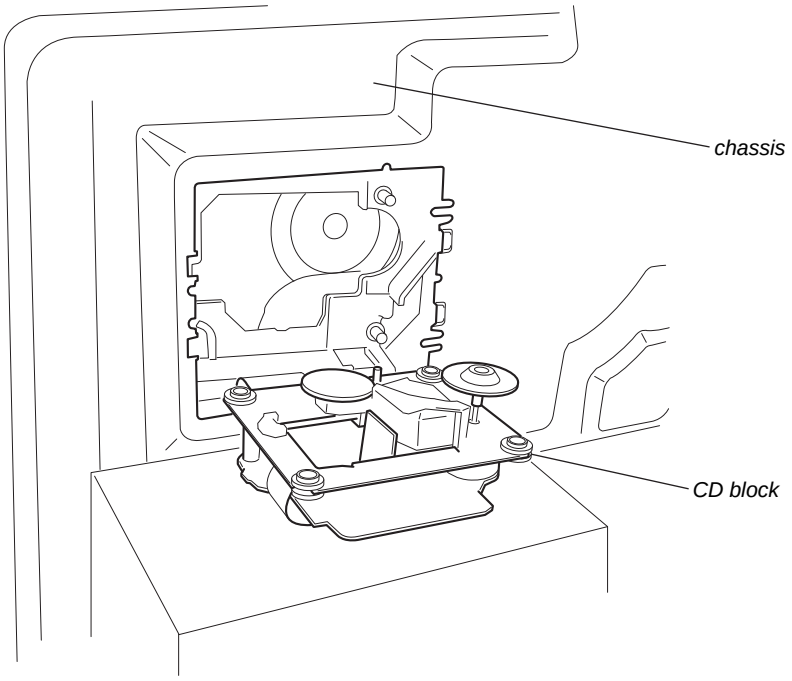

## 1-2. SERVICE POSITION OF PANEL COM BOARD

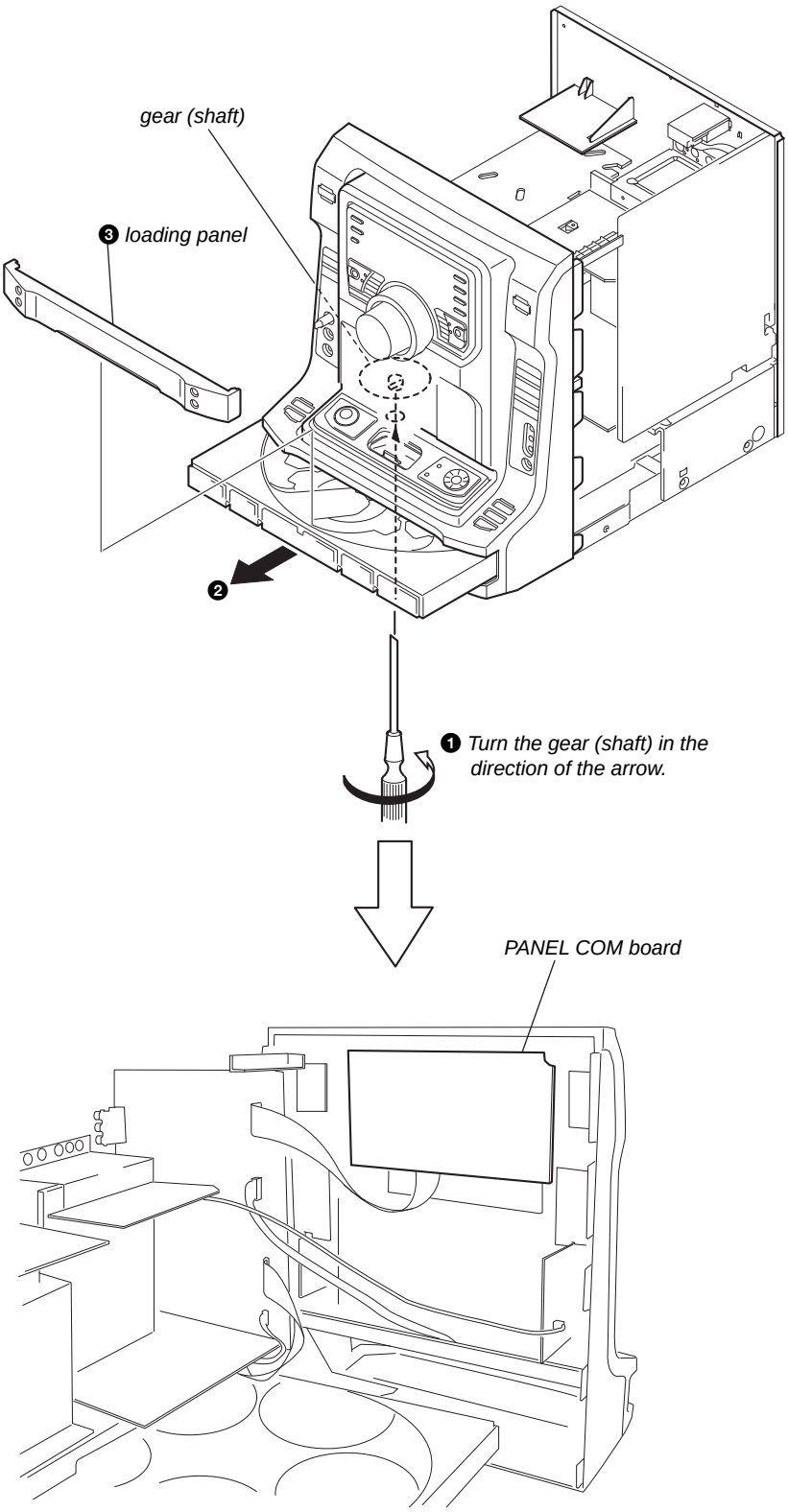

## 1-3. SERVICE POSITION OF POWER AMP BOARD

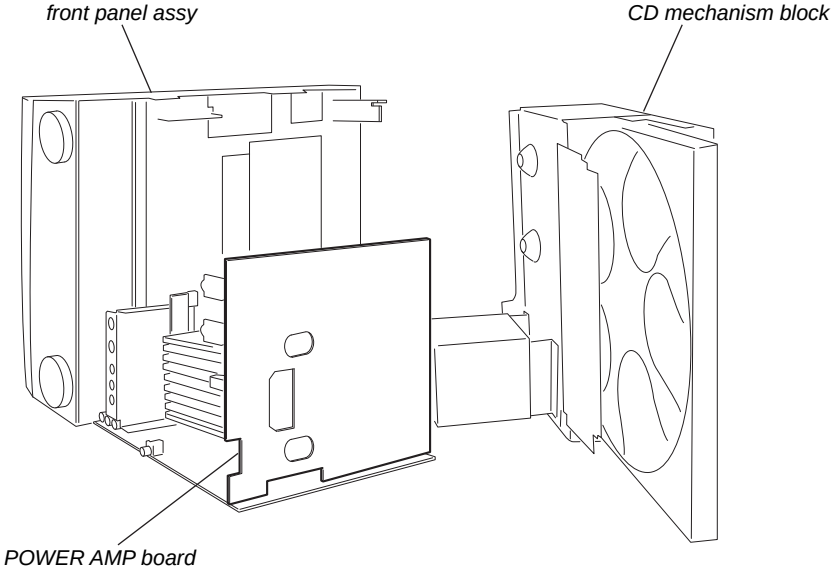


## 1-4. SERVICE POSITION OF CD CHANGER

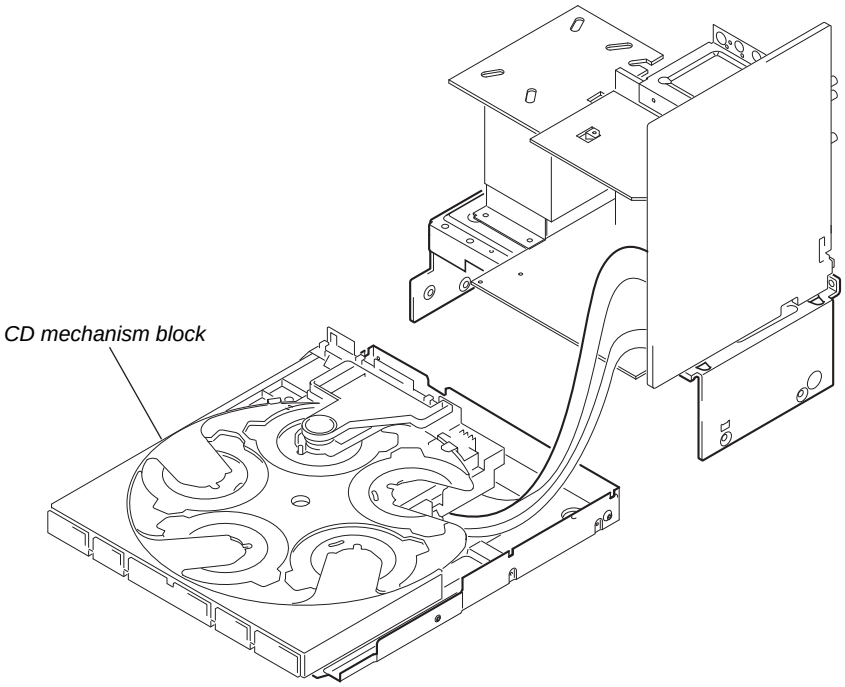

# SECTION 2
# GENERAL

This section is extracted from instruction manual.

## Guide to parts and controls

This manual mainly explains operations using the buttons on the unit, but the same operations can also be performed using the buttons on the remote having the same or similar names.

### Unit

**– Front view**

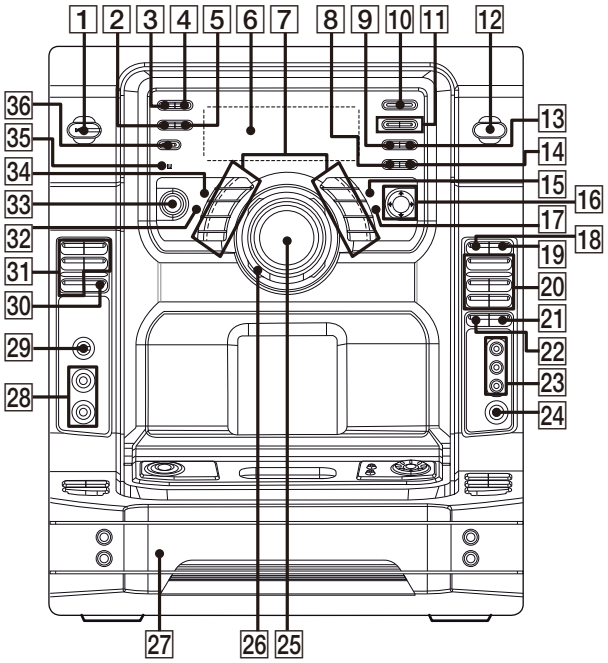


**– Top view**

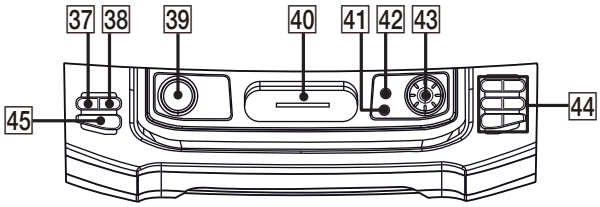

### Remote RM-AMU008

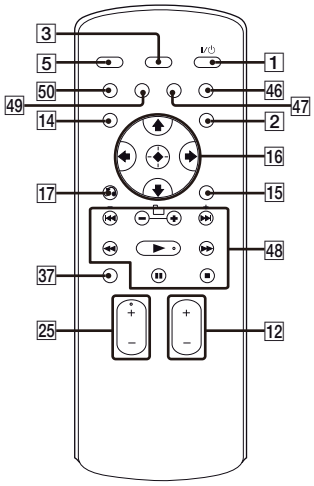


1 I/⏻ (on/standby) (pages 13, 14, 16, 20, 34, 37)
Press to turn the system on or off.

2 TIMER MENU (pages 16, 32)
Press to set the clock and the timers.

3 DISPLAY (pages 16, 21, 27, 28)
Press to change the information in the display.

4 ILLUMINATION (page 26)
Press to select the power illuminator.

5 SLEEP (page 32)
Press to set the Sleep Timer.

6 Display (pages 10, 26, 28, 37)

7 Preset Effect buttons (SALSA/REGGAE/POP/SAMBA/TANGO/ROCK/JAZZ/DANCE/MOVIE/GAME) (page 22)
Press to select preset effect.

8 AMP MENU (pages 23, 27, 31)
Press to display the menu to operate the system.

9 FM MODE (pages 20, 37)
Press to select the FM monaural or stereo reception.

10 TUNER/BAND (page 19)
Press to select AM or FM band.

11 TUNING +/– (pages 19, 30)
Press to tune in a radio station.

12 Unit: FUNCTION (pages 14, 17, 22, 29)
Remote: FUNCTION +/– (pages 17, 19, 22, 29)
Press to select a function.

13 TUNING MODE (pages 19, 31, 37)
Press to select the tuning mode.

14 TUNER MEMORY (page 30)
Press to preset a radio station.

15 TOOL MENU (page 21)
Press to return to previous menu of the iPod.

16 ↑/↓/←/→ (pages 16, 21, 23, 27, 31, 32)
Push to select the menu items of the system and iPod.

Unit: ENTER (pages 16, 21, 23, 27, 29, 30, 31, 32)
Remote: ⊕ (pages 16, 21, 29, 30, 32)
Press to enter the settings.

17 Unit: RETURN (page 21)
Remote: ↶ RETURN (page 21)
Press to return to previous menu of the iPod.

18 iPod (page 20)
Press to select iPod function.

19 PHONO (page 22)
Press to select PHONO function.

Continued

20 Operation buttons for iPod function:
►II (play/pause) (pages 20, 21)
Press to start or pause playback.

◄◄/►► (rewind/fast foward) (page 21)
Press to find a point in a track.

I◄◄/►►I (go backward/go forward) (page 21)
Press to select a track.

21 GAME MIXING (page 26)
Press to select the level of the GAME input.

22 GAME (pages 22, 25)
Press to select the GAME function.

23 GAME INPUT VIDEO jack (pages 13, 22)
GAME INPUT AUDIO L/R jacks (pages 13, 22)
Connect to an optional video game player.

24 PHONES jack (pages 34, 39)
Connect the headphones.

25 Unit: VOLUME +/– (pages 17, 19, 20, 22, 32, 34)
Turn to adjust the volume.

Remote: VOLUME +*/– (pages 17, 19, 20, 22, 32, 34)
Press to adjust the volume.

26 Power illuminator (page 26)

27 Disc tray (pages 10, 14, 17, 35, 37)

28 MIC 1/MIC 2 jack (pages 32, 34, 39)
Connect an optional microphone.

29 MIC LEVEL (pages 32, 34)
Turn to adjust the microphone volume.

30 PLAY MODE (pages 18, 36, 37)
Press to select the play mode of CD function.

31 DISC 1 ~ 5 (pages 17, 29)
Press to select a disc.
Press to switch to CD function from other function.

32 USER EQ (page 31)
Press to select the preset user equalizer.

33 X-GROOVE (page 22)
Press to reinforce the bass.

34 SURROUND (page 22)
Press to select the surround effect.

35 IR Receptor (page 35)

36 EFFECT ON/OFF (page 22)
Press to activate or deactivate the preset effect.

37 DISC SKIP (pages 14, 17, 29)
Press to select next disc.

38 EX-CHANGE (page 17)
Press to exchange other discs during playback.

39 (LBT-ZX99i only)
SOUND FLASH (page 24)
Press and hold to select “SOUND FLASH” effect.

40 iPod connector (pages 13, 20)
Place an optional iPod on the connector to listen to audio contents stored in the iPod.

41 (LBT-ZX99i only)
MODE (page 23)
When X-ROUND is set to on, press to select X-ROUND mode.

(LBT-ZX99i only)
SPEAKERS (page 25)
When X-ROUND is set to off, press to select speaker setting.

42 (LBT-ZX99i only)
X-ROUND ON/OFF (pages 23, 25)
Press to activate or deactivate X-ROUND mode.

43 (LBT-ZX99i only)
JOG (page 24)
Turn to select X-ROUND setting.
Turn to select SOUND FLASH speed.

44 Operation buttons for CD function:
🗀 +/– (pages 17, 29)
Press to select a folder of MP3 files.

◀◀/▶▶ (rewind/fast forward) (page 17)
Press to fast forward or rewind.

⏮/⏭ (go backward/go forward) (page 17)
Press to select a track.

▶II (play/pause) (pages 17, 27, 29, 35)
Press to start or pause playback.

■ (stop) (pages 17, 19)
Press to stop playback.

45 ⏏ OPEN/CLOSE (pages 14, 17, 35)
Press to open or close the disc tray.

46 EQ (pages 22, 31)
Press to select a preset sound effect.

47 CLEAR (page 30)
Press to delete the last step from the program list.

48 Operation buttons on remote:
+/– (tuning) (pages 19, 30)
Press to tune in a radio station.

🗀 +/– (pages 17, 29)
Press to select a folder of MP3 files.

⏮/⏭ (go backward/go forward) (pages 17, 21)
Press to select a track.

◀◀/▶▶ (rewind/fast forward) (pages 17, 21)
Press to fast forward or rewind.

▶ * (play) (pages 17, 20, 29, 35)
Press to start playback.

II (pause) (pages 17, 21)
Press to pause playback.

■ (stop) (pages 17, 19)
Press to stop playback.

49 REPEAT/FM MODE (pages 17, 37)
Press to change the Repeat Play setting of CD function.
Press to select the FM monaural or stereo reception.

50 PLAY MODE/TUNING MODE (pages 18, 19, 29, 31, 36, 37)
Press to select the play mode of CD function.
Press to select the tuning mode.

* The VOLUME + and ▶ buttons have tactile dots. Use the tactile dots as references when operating the system.

Continued ⇨

### – Display

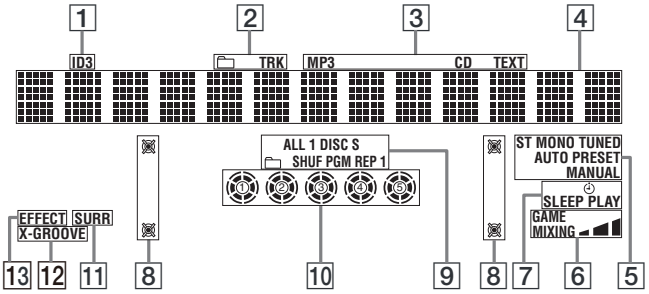


1 Lights up when the MP3 file contains ID3 tag information.
2 "TRK" lights up when a file name is displayed. "🗀" lights up when a folder name is displayed.
3 Indicates the type of disc or file that the system recognized.
4 Displays the current status and information (page 28).
5 Indicators for the TUNER function (pages 19, 30).
6 Indicators for the level of the Game Mixing (page 26).
7 Lights up when the timer is set (page 32).
8 (LBT-ZX99i only)
Lights up according to the speaker system setting.
9 Indicates the selected play mode for CD function (pages 18, 28).
10 Indicators for the disc tray (page 17). "◯" lights up when the disc is selected. "◌" lights up when there is a disc on the disc tray. "1", "2", "3", "4" and "5" light up when the system is turned on.
11 Lights up when the surround effect is activated (page 22).
12 Lights up when the X-GROOVE effect is activated (page 22).
13 Lights up when the sound effect is activated (page 22).

## Getting Started

# Hooking up the system

### – Rear panel

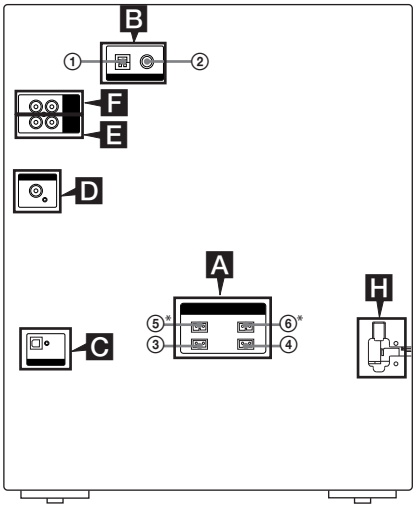


### – Front panel

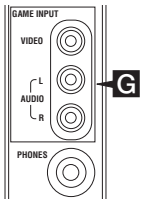


① To AM loop antenna
② To FM lead antenna
③ To front speaker (right)
④ To front speaker (left)
⑤ To surround speaker (right)
⑥ To surround speaker (left)

* LBT-ZX99i only.

### A Speakers

The speaker connectors are color-coded with their respective speaker terminals on the unit.

**Front speakers (LBT-ZX99i only)**

Connect the speaker cords to the SPEAKER FRONT (SPEAKER A) terminals.

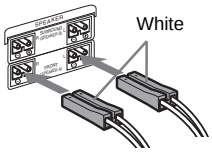


**(LBT-ZX66i only)**

Connect the speaker cords to the SPEAKER terminals.

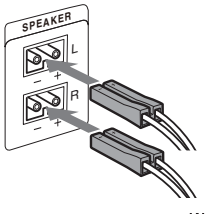


Continued

**Tip**

Connect the speaker cords to the terminals on the front speakers.

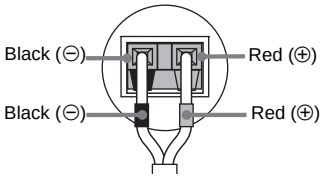


**Surround speakers (LBT-ZX99i only)**

Connect the speaker cords to the SPEAKER SURROUND (SPEAKER B) terminals and to the terminals on the speakers as shown in the tip above.

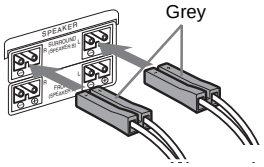


**Notes**

- Be sure to use only the supplied speakers.
- Be sure to connect the speakers securely and correctly. When connecting speaker cords, insert the connector straight into the terminals.

## B Antennas

Find a location and an orientation that provide good reception, and then set up the antennas.

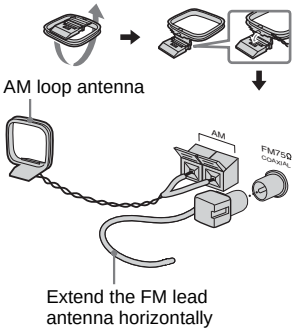


**Note**

Keep the antennas away from the speaker cords and the power cord to avoid picking up noise.

## C CD DIGITAL OUT jack

Use a digital optical cable (square, not supplied) to connect the digital input of the optional MD deck to this jack. You can then record digital audio from this system.

**Note**

There is no digital audio output from this jack during playback of MP3 files.

## D VIDEO OUT jack

Use a video cable (not supplied) to connect the video input of TV to this jack.

## E PHONO IN L/R jacks

Use an audio cord (not supplied) to connect the audio output of the turntable to these jacks. You can then output audio through this system.

### F PC IN L/R jacks

Use an audio cord (not supplied) to connect the audio output of the computer to these jacks. You can then output audio through this system.

### G GAME INPUT jacks
### GAME INPUT VIDEO jack

Use a video cable (not supplied) to connect the video output of the optional video game player to this jack. You can then output video through this system.

**Note**

The video game player image may appear on the TV screen even if the system is turned off.

### GAME INPUT AUDIO L/R jacks

Use an audio cord (not supplied) to connect the audio output of the optional video game player to these jacks. You can then output audio through this system.

### H Power

Connect the power cord to a wall outlet. The demonstration appears in the display. When you press I/⏻, the system turns on and the demonstration automatically ends.

## Using the iPod

Insert the iPod Dock Adapter (not supplied) into the iPod connector before use.
Use a Dock Adapter supplied with your iPod. Otherwise, a compatible Dock Adapter will need to be purchased separately from Apple Inc.

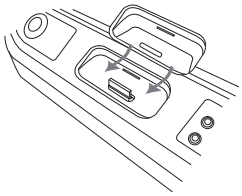

To remove the iPod Dock Adapter, pull it up with your fingernail or a flat object using the slot inside the adapter.

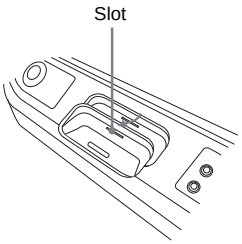


## Using the remote

Slide and remove the battery compartment lid, and insert the two supplied R6 (size AA) batteries, ⊖ side first, matching the polarities shown below.

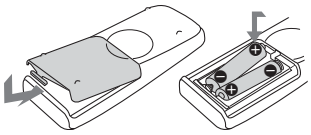

**Notes**

- If you do not use the remote for a long period of time, remove the batteries to avoid possible damage from battery leakage and corrosion.
- With normal use, the batteries should last for about six months. When the remote no longer operates the system, replace both batteries with new ones.
- Batteries installed devices shall not be exposed to excessive heat such as sunshine, fire or the like.

# SECTION 3
# DISASSEMBLY

- This set can be disassembled in the order shown below.

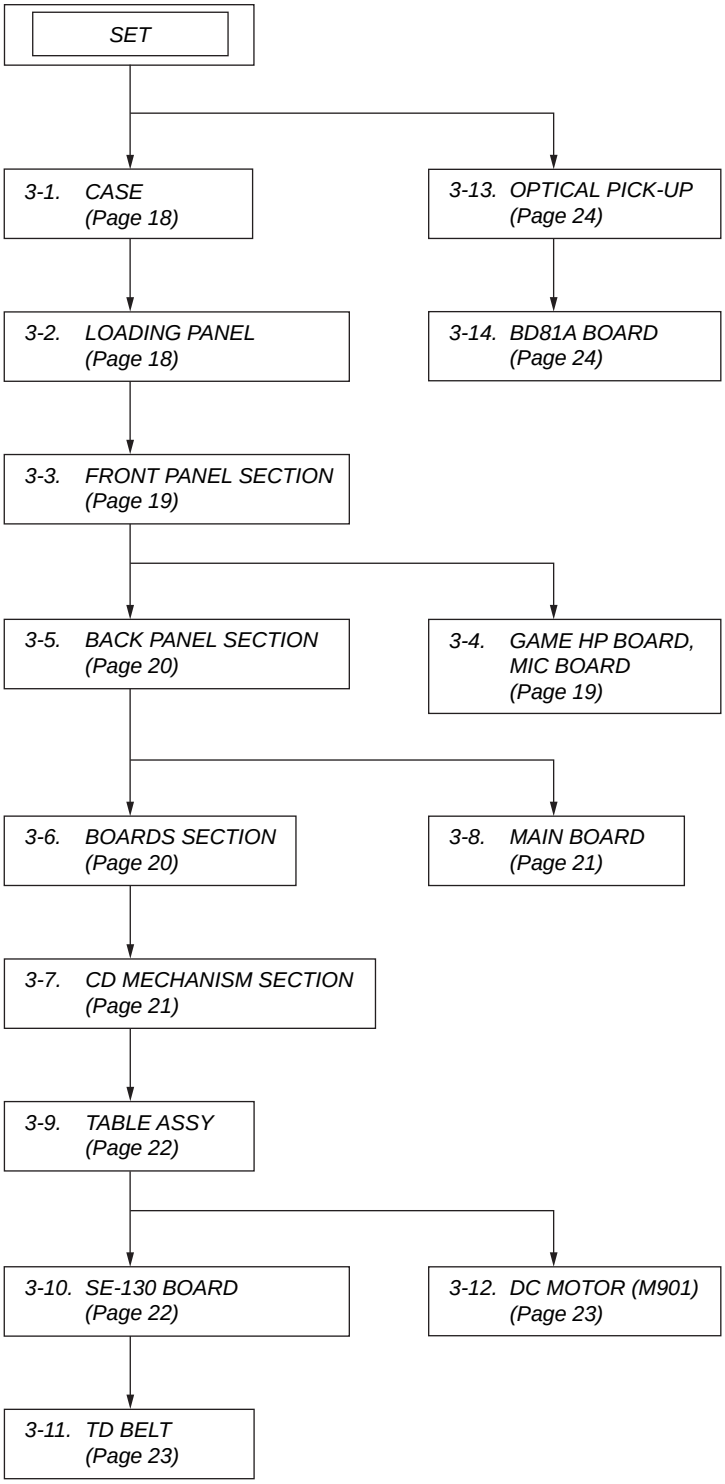

**Note:** Follow the disassembly procedure in the numerical order shown below.

## 3-1. CASE

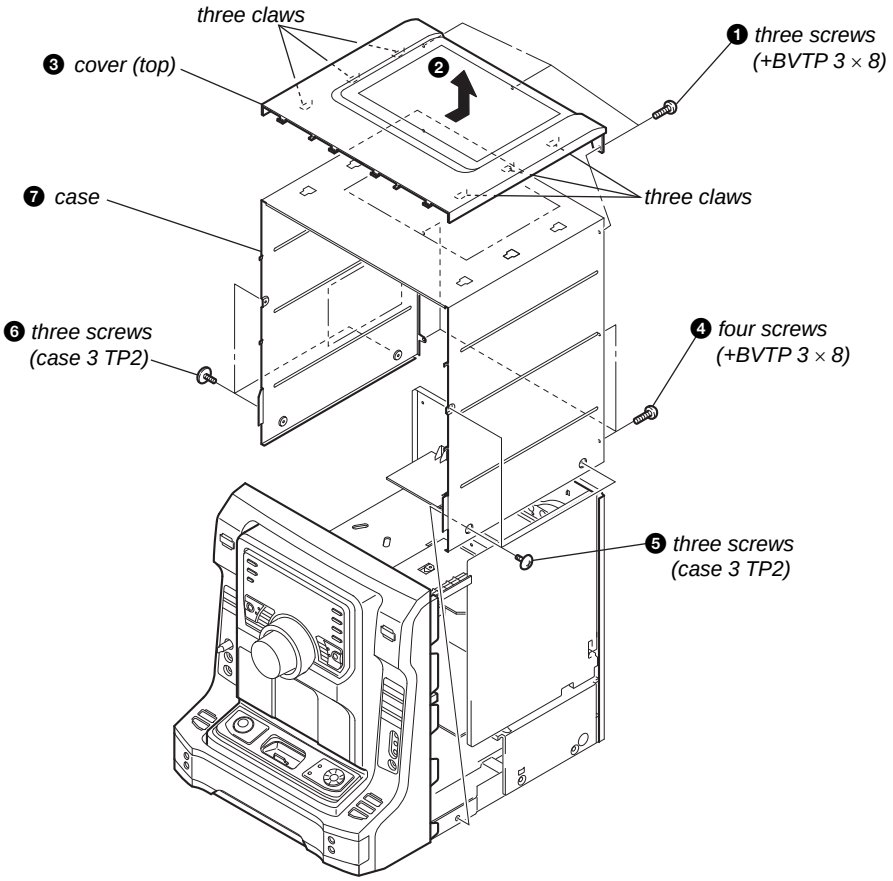


## 3-2. LOADING PANEL

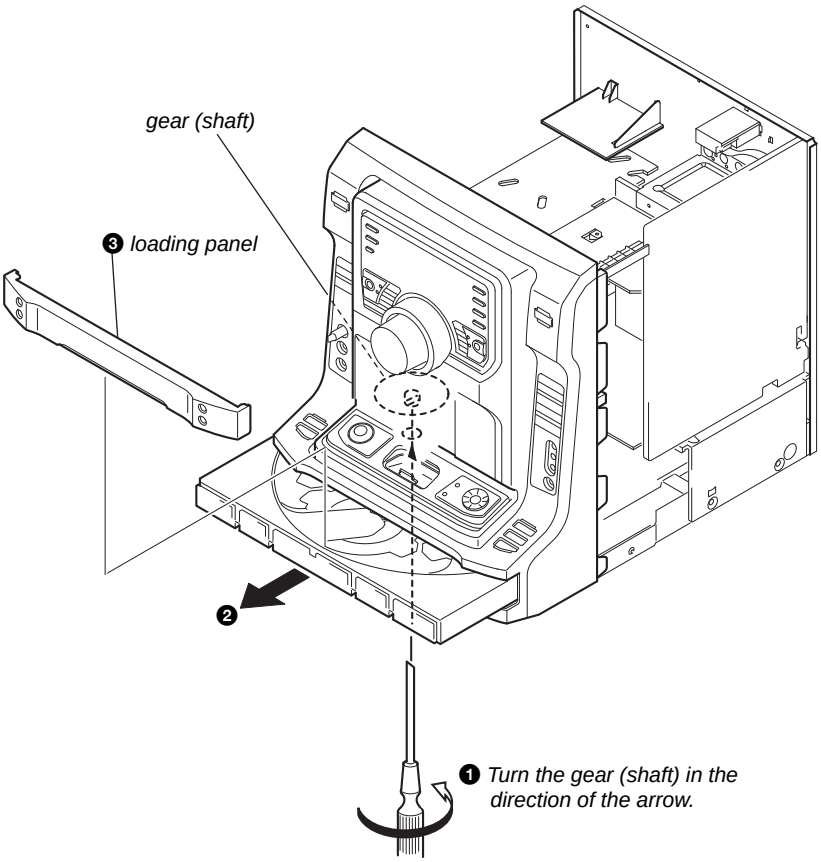

### 3-3. FRONT PANEL SECTION

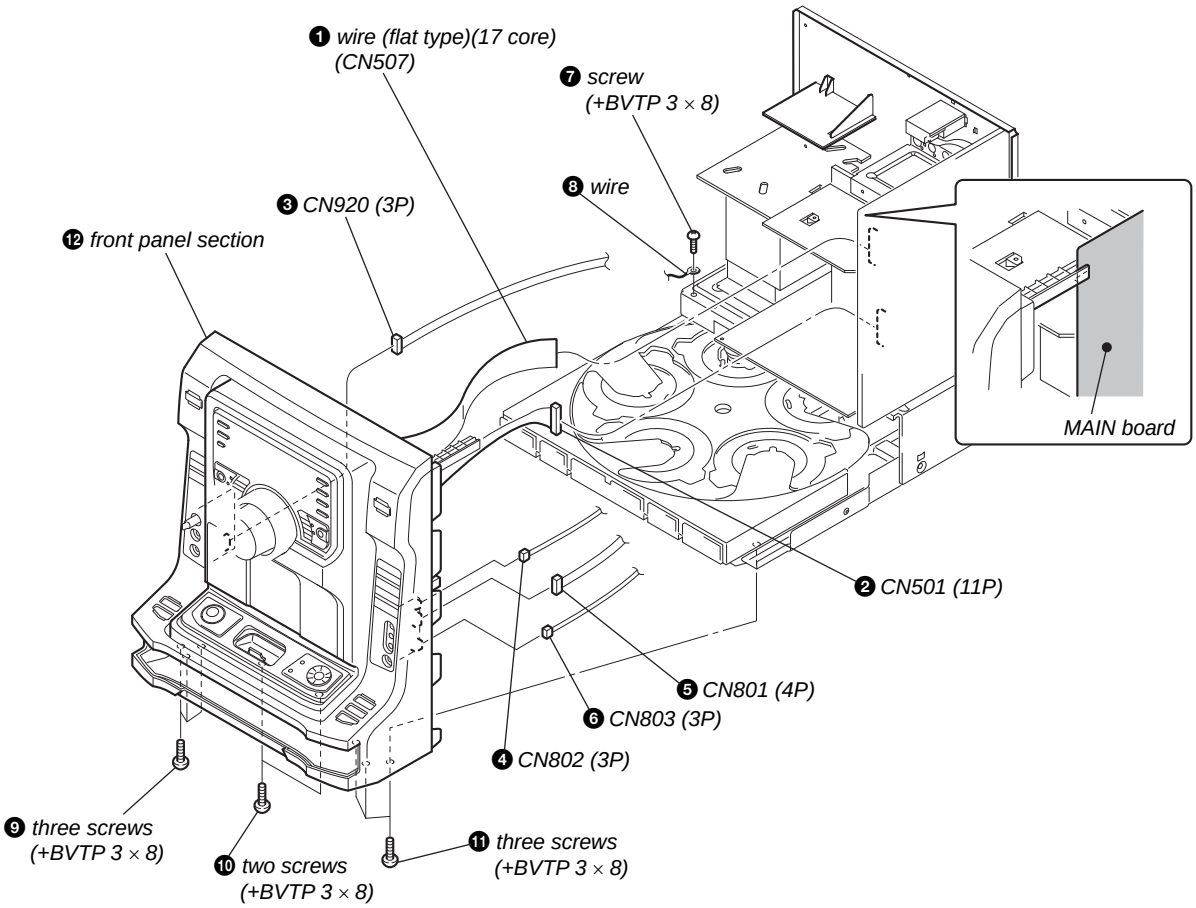


### 3-4. GAME HP BOARD, MIC BOARD

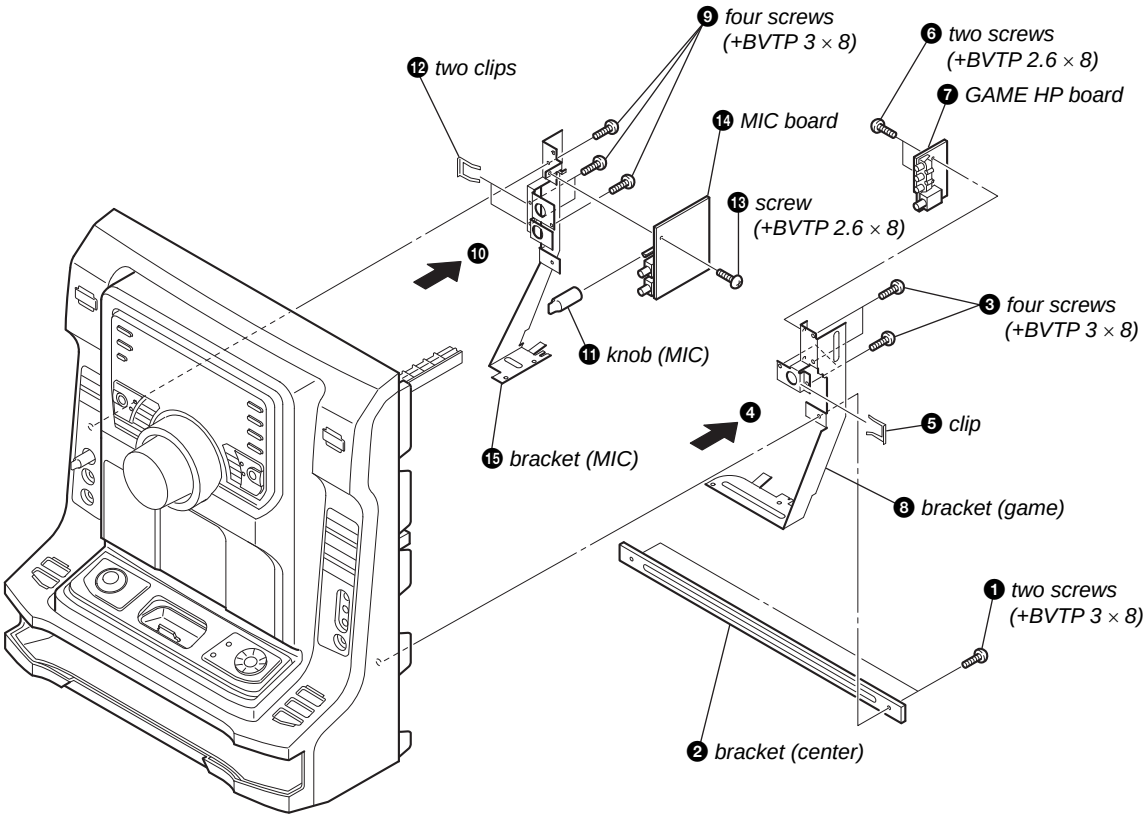

### 3-5. BACK PANEL SECTION

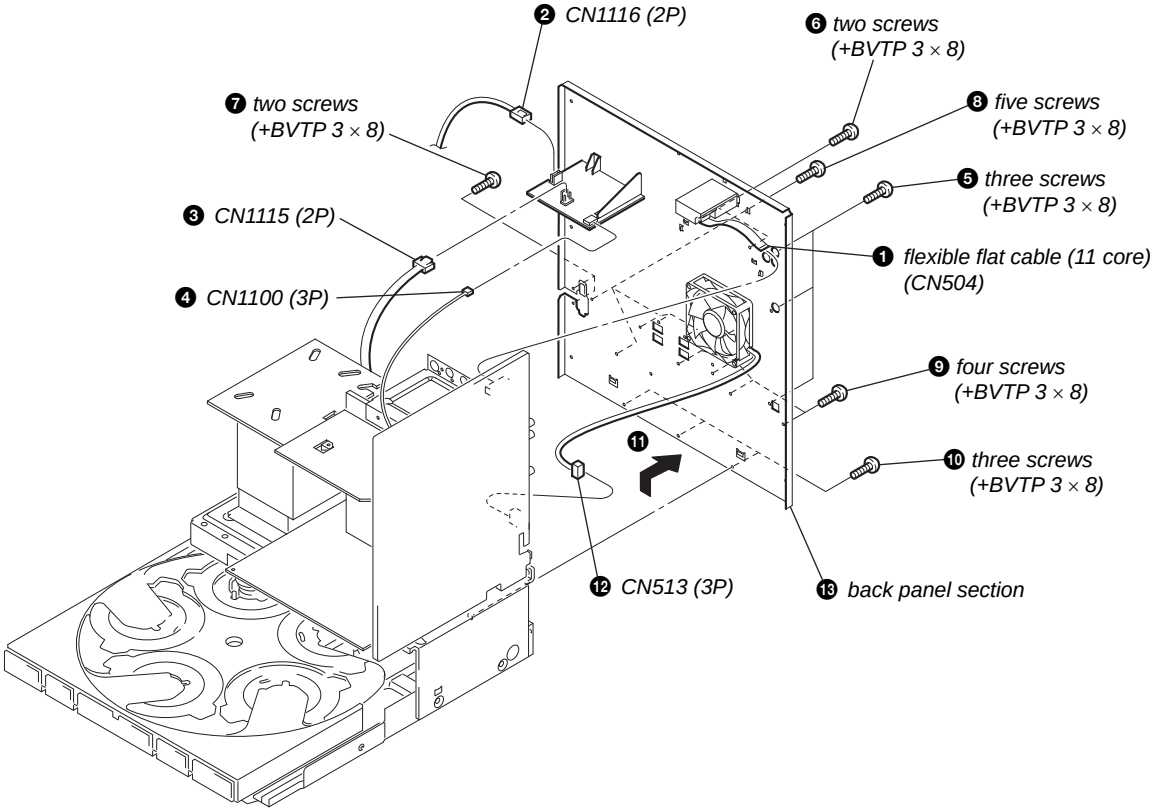


### 3-6. BOARDS SECTION

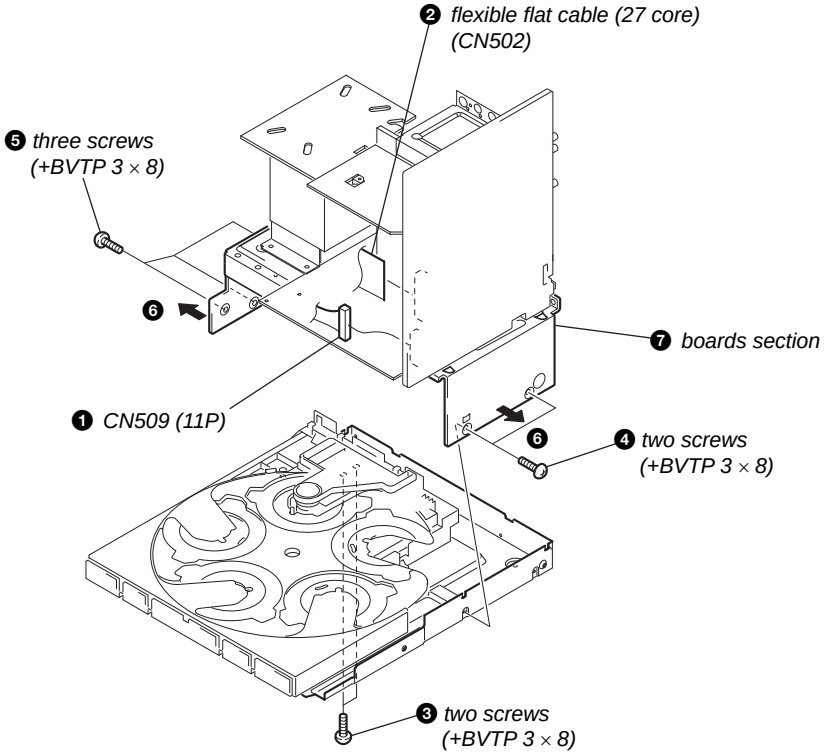

### 3-7. CD MECHANISM SECTION

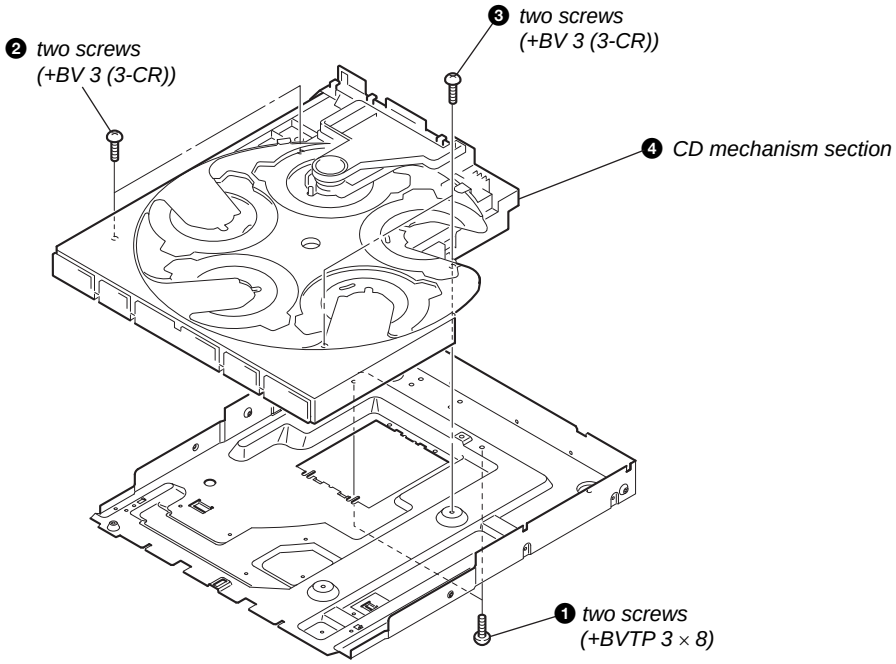


### 3-8. MAIN BOARD

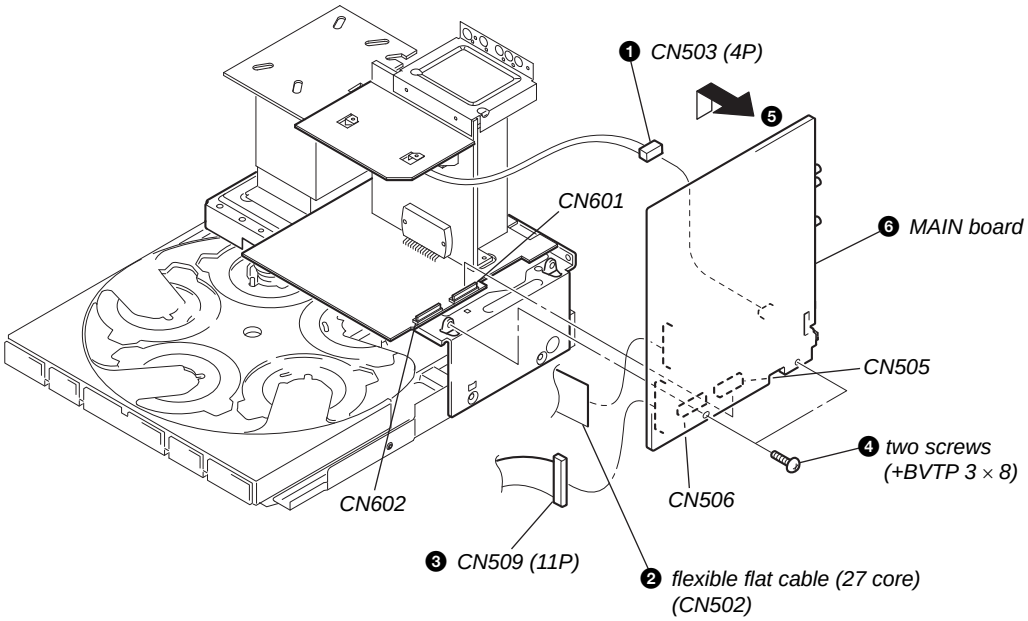

### 3-9. TABLE ASSY

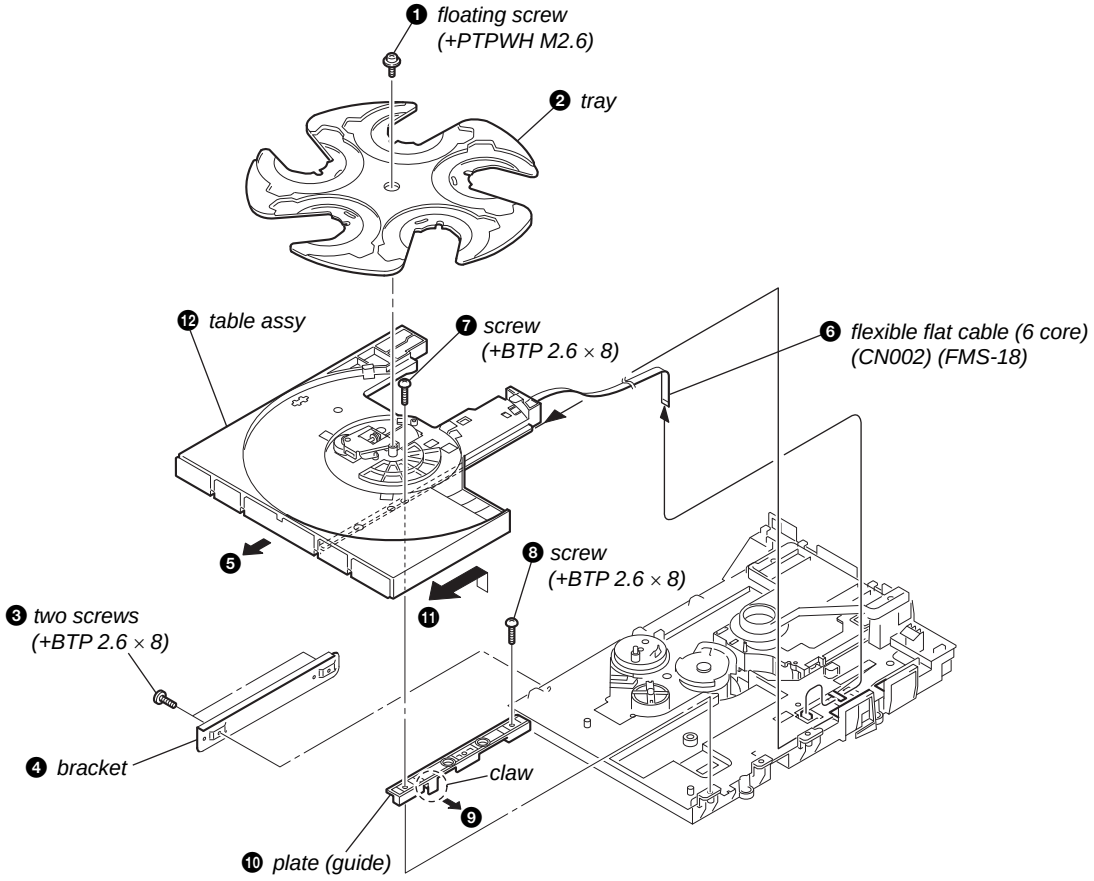


### 3-10. SE-130 BOARD

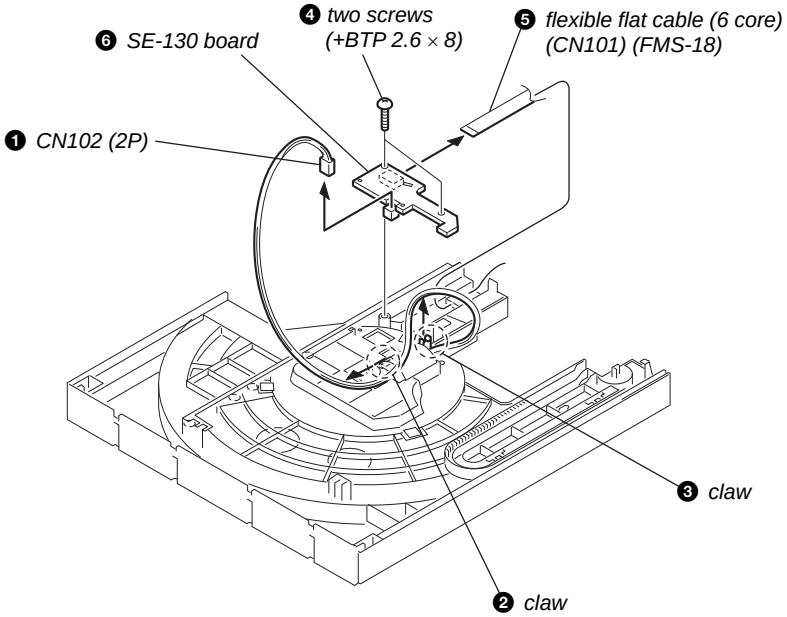

### 3-11. TD BELT

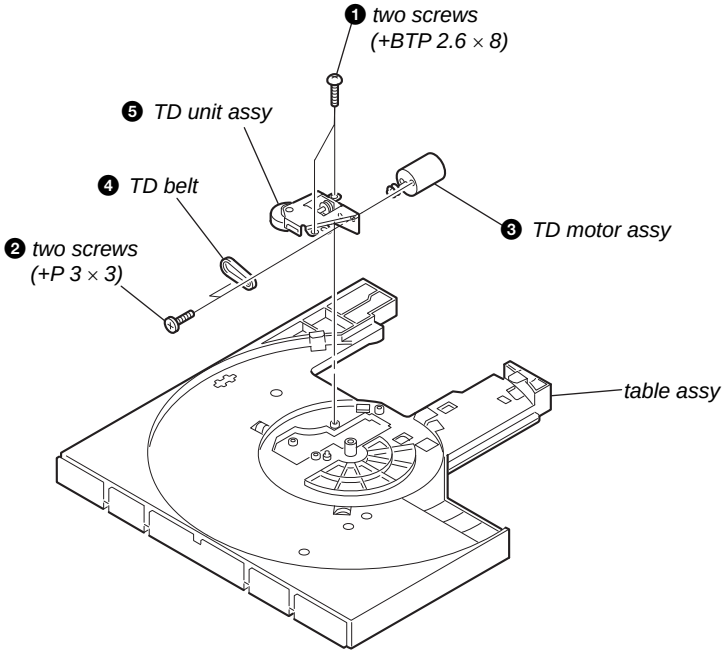


### 3-12. DC MOTOR (M901)

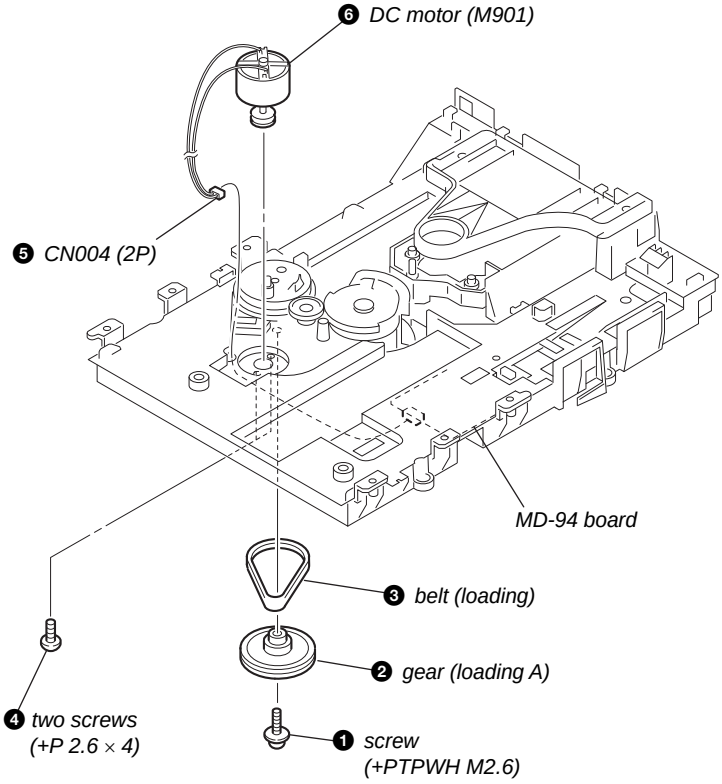

### 3-13. OPTICAL PICK-UP

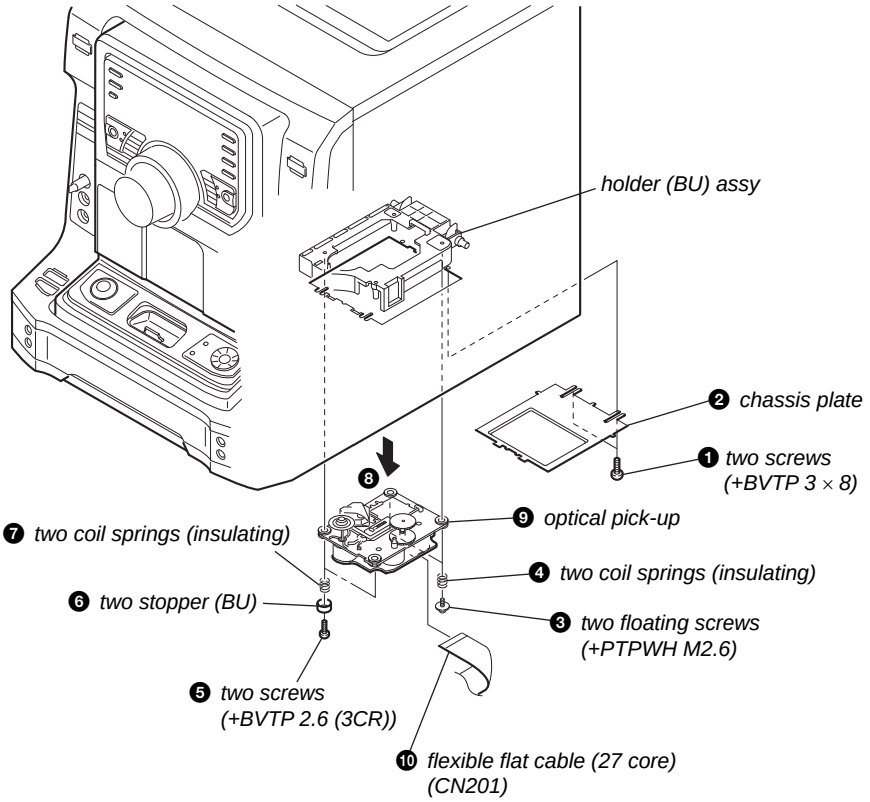


### 3-14. BD81A BOARD

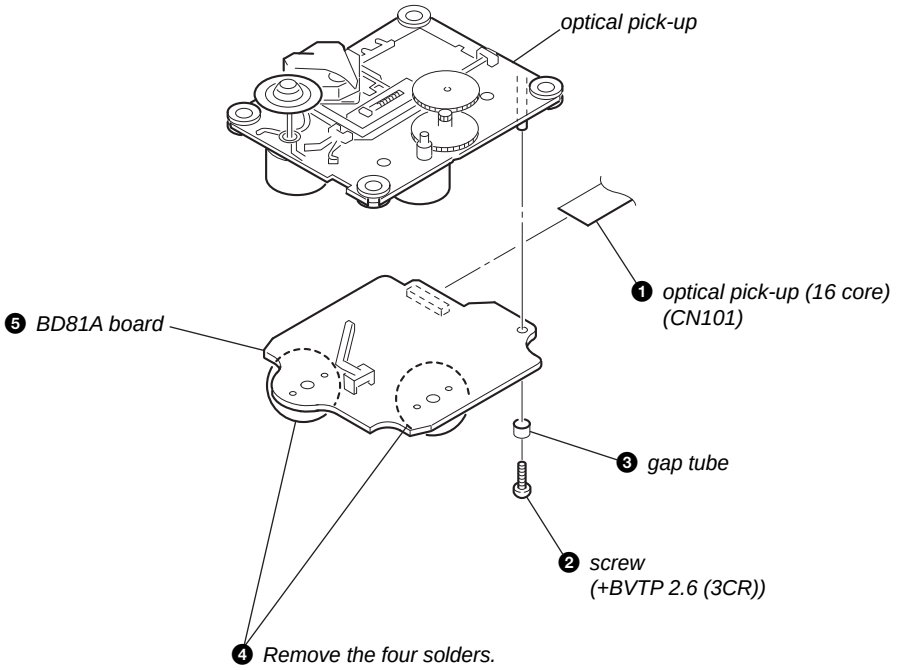

# SECTION 4
# TEST MODE

### [GC TEST MODE]

- This mode is used to check the fluorescent indicator tube, LEDs, keys, JOG, VOLUME jog, model, destination and software version.

**Procedure:**

1. Press [▶▶] (iPod) button, [TUNING MODE] button and [DISC 2] button simultaneously.
2. All segments in fluorescent indicator tube and the LEDs are lighted up.
3. When you want to enter to the model version and destination display mode, press [DISC 1] button. The model information appears on the fluorescent indicator tube.
4. Each time [DISC 1] button is pressed, the display changes to display software version of the software creation. The sequence is MC, GC, SYS, CD, CDDM, CDMA, CDMB, BDA, BDB, ST, TA, TM, and iPod in this order, and returns to the MC version display.
5. When [DISC 3] button is pressed while the software version is being displayed, the date of the software creation appears.
   When [DISC 3] button is pressed again, the display returns to the software version display. When [DISC 1] button is pressed while the date of the software creation is being displayed, the date of the software creation is displayed in the same order of software version display.
6. Press [DISC 2] button, the key check mode is activated.
7. In the key check mode, the fluorescent indicator tube displays "K 0 J0 V0".
   Turn the [JOG] clockwise; "J" value increases by one. Turn the [JOG] counterclockwise; "J" value decreases by one. Each time a button is pressed, "K" value increases. Press their keys on main unit to check whether the key is detected. However, once a button has been pressed, it is no longer taken into account.
   "V" value increases in the manner of 0, 1, 2, 3 ... if [VOLUME] knob is turned clockwise, or it decreases in the manner of 0, 9, 8, 7 ... if [VOLUME] knob is turned counterclockwise.
8. When [EX-CHANGE] button is pressed after all segments in fluorescent indicator tube and the LEDs light up, alternate segments in fluorescent indicator tube would light up. If you press [EX-CHANGE] button again, another half of alternate segments in fluorescent indicator tube would light up. Press [EX-CHANGE] button again would cause all segments lights up.
9. To release from this mode, press three buttons in the same manner as step 1, or disconnect the power cord.

### [MC TEST MODE]

- This mode is used to check operations of the respective sections of Amplifier and Tuner.

**Procedure:**

- To enter MC Test Mode

1. Press [▶▶] (iPod) button, [TUNING MODE] button and [DISC 3] button simultaneously.
2. The CD ring indicators and speaker indicators flash on the fluorescent indicator tube. The function is changed to PHONO.

- Check of Amplifier

1. Press [▲] button and a message "GEQ MAX" appears on the fluorescent indicator tube. GEQ increases to its maximum.
2. Press [▼] button and a message "GEQ MIN" appears on the fluorescent indicator tube. GEQ decreases to its minimum.
3. Press either [◀] button or [▶] button and a message "GEQ FLAT" appears on the fluorescent indicator tube. GEQ is set to flat.
4. When the [VOLUME] knob is turned clockwise even slightly, the sound volume increases to its maximum and a message "VOLUME MAX" appears on the fluorescent indicator tube.
5. When the [VOLUME] knob is turned counterclockwise even slightly, the sound volume decreases to its minimum and a message "VOLUME MIN" appears on the fluorescent indicator tube.

- To release from MC Test mode

1. To release from this mode, press [I / ⏻] button.
2. The cold reset is enforced at the same time.

### [COLD RESET]

- The cold reset clears all data including preset data stored in the RAM to initial conditions. Execute this mode when returning the set to the customer.

**Procedure**:

1. Press [▶▶] (iPod) button, [TUNING MODE] button, and [I / ⏻] button simultaneously.
2. The fluorescent indicator tube becomes blank for a while, and the set is reset.

### [VACS ON/OFF]

- This mode is used to switch ON and OFF the VACS (Variable Attenuation Control System).

**Procedure:**

1. Press [I / ⏻] button to turn the set ON.
2. Press [AMP MENU] button and [I / ⏻] button simultaneously. The message "VACS OFF" or "VACS ON" appears on the fluorescent indicator tube.

### [TUNER STEP CHANGE]

- The step interval of AM channels can be toggled between 9 kHz and 10 kHz.

**Procedure:**

1. Press [I / ⏻] button to turn the set ON.
2. Press [TUNER/BAND] button to select the "AM".
3. Press [I / ⏻] button to turn the set OFF.
4. Press [TUNING MODE] button and [I / ⏻] button simultaneously. The system will turn ON automatically. The message "AM 9k STEP" or "AM 10k STEP" appears on the fluorescent indicator tube and thus the channel step is changed.

### [CD SERVICE MODE]

- This mode let you move the CD sled motor freely. Use this mode when you want to clean the optical pick-up.

**Procedure:**

1. Press [I / ⏻] button to turn the set ON.
2. Select CD function.
3. Press [▶▶] (iPod) button, [TUNING MODE] button, and [DISC 5] button simultaneously.
4. The CD service mode is activated. The message "SERVICE MODE" appears on the fluorescent indicator tube.
5. With the CD in stop status, press [▶▶] (CD) to move the optical pick-up to outside track, or turn [◀◀] (CD) to move to inside track. The message "SLED OUT" or "SLED IN" appears on the fluorescent indicator tube.
6. To turn on or off the laser, press [PLAY MODE] button. The message "LD ON" or "LD OFF" appears on the fluorescent indicator tube.
7. To release from this mode, press [I / ⏻] button.

**[CD AGING MODE]**

- This mode can be used for operation check of CD section.
  If an error occurs, the aging operation would stops and the status is displayed.
  If there were no error occurs, the aging operation would continue repeatedly.

**Procedure:**

1. Press [I / ⏻] button to turn the set ON.
2. Select CD function.
3. Load 5 discs on the disc tray.
4. Press [PLAY MODE] button repeatedly to select the "ALL DISCS" mode, and press the [REPEAT] button on the remote repeatedly to select repeat mode off.
5. Press [▶▶] (iPod) button, [TUNING MODE] button and [DISC 4] button simultaneously.
6. Aging operation is started.
7. To release from this mode, press [I / ⏻] button or disconnect the power cord to turn the power OFF.

**Aging mode sequence:**

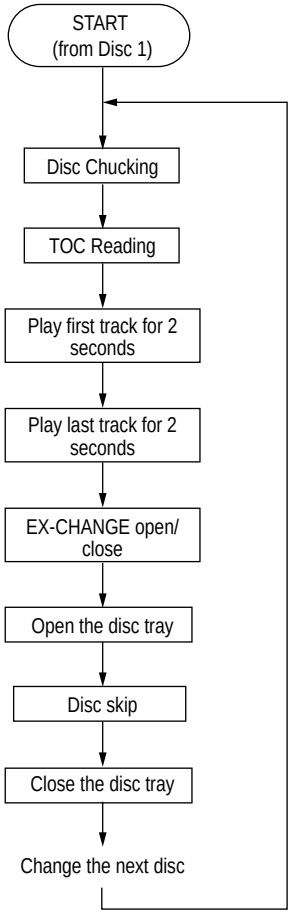


**[CD ERROR CODE MODE]**

1. Display the CD error code when an error occurred

**Procedure:**

1. Press [▶▶] (iPod) button, [TUNING MODE] button and [DISC SKIP] button simultaneously to enter the error code display mode.
2. The fluorescent indicator tube displays the number of total error.
3. Each time CD buttons is pressed, display change as below.

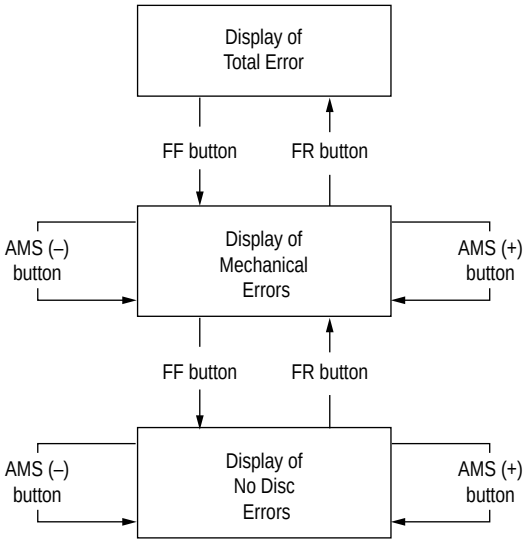


4. To clear the error record, operate the cold reset. (Refer to the "MC COLD RESET")
5. To release from this mode, press the [I / ⏻] button or disconnect the power plug to turn the power OFF.

2. Display of total error

Em**Ed**

Em**: The number of times for CDM (mechanical) errors.
Ed**: The number of times for BD error (after chucking the disc).

- Display of CDM (mechanical) errors. It is show with "M" and 11 digit number.

M*$$%%&&##00

M*: The number of history error for mechanical ("0" is latest one)
(Press [▶▶I] (CD) button to display next error)
$$: Not used
%%: Loading related error (Second figure is not used)
D: Stop by the problem other than mechanical problem while closing.
E: Stop by the problem other than mechanical problem while opening.
C: Stop by the problem other than mechanical problem while chucking up.
F: Stop by the problem other than mechanical problem while chucking down.

&&: Emerging error
01: Stop while chucking up.
02: Stop while chucking up.
03: Time-out of EX-CHANGE open.
05: Time-out of EX-CHANGE close.
##: Not used (value is fixed to 00)
00: Not used (value is fixed to 00)

- Display of BD errors. It is shown with "D" and 11 digits number.

D*$$%%&&##00

D*: The number of error history ("0" is latest one)
(Press [▶▶I] (CD) button to display next error)
$$: The detail of trouble
01: Focus error
02: GFS error
03: Setup error

%%: Not Used

&&: Processing operation when trouble occurs
00: No disc judgment without chucking retry.
01: No disc judgment after chucking retry.

##: The state when judged as no disc
01: Stop
02: Setup
03: TOC reading
04: Access
05: Playback
06: Pause
07: Manual search (Play)
08: Manual search (Pause)

00: Not used (value is fixed to 00)

### [CD REPEAT 5 LIMIT OFF MODE]

- The number of repeat for CD playback is 5 times when the repeat mode is "REPEAT ALL". This mode enables CD to repeat playback for limitless times.

**Procedure:**
1. Press [I / ⏻] button to turn the set ON.
2. Select CD function.
3. Press [▶▶] (iPod) button, [TUNING MODE] button and [EX-CHANGE] button simultaneously to enter the CD repeat 5 limit off mode and the fluorescent indicator tube displays "LIMIT OFF".
4. To release from this mode, operate the cold reset. (Refer to the "MC COLD RESET")

### [CD SHIP MODE (WITH MEMORY CLEAR)]

- This mode moves the optical pick-up to the position durable to vibration and clears all data including preset data stored in the RAM to initial conditions. Use this mode when returning the set to the customer after repair.

**Procedure:**
1. Press [I / ⏻] button to turn the set ON.
2. Select CD function.
3. Press [EX-CHANGE] button and [I / ⏻] button simultaneously. The set will power off automatically.
4. After the "STANDBY" blinking display finishes, a message "MECHA LOCK" is displayed on the fluorescent indicator tube and the CD ship mode is set.
5. Then AC power OFF.

### [CD SHIP MODE (WITHOUT MEMORY CLEAR)]

- This mode moves the optical pick-up to the position durable to vibration. Use this mode when returning the set to the customer after repair.

**Procedure:**
1. Press [I / ⏻] button to turn the set ON.
2. Select CD function.
3. Press [DISC SKIP] button and [I / ⏻] button simultaneously. The set will power off automatically.
4. After the "STANDBY" blinking display finishes, a message "MECHA LOCK" is displayed on the fluorescent indicator tube and the CD ship mode is set.
5. The AC power OFF.

### [CD POWER MANAGE]

- This mode let you switch on or off power supply to the BU during TUNER function.

- When CD POWER is set to OFF, the power supply to the BU is cut off during TUNER function. It will increase the time taken to access CD when function change from TUNER to CD but it will improve tuner reception.

- When CD POWER is set to ON, the power supply to the BU is not cut off during TUNER function. It will reduce the time taken to access CD when function change from TUNER to CD but it will decrease tuner reception performance.

**Procedure:**
1. Press [I / ⏻] button to turn the set ON.
2. Select CD function.
3. Press [I / ⏻] button to turn the set OFF.
4. When demonstration appear, press [■] (CD) button and [I / ⏻] button simultaneously. The set will power on automatically.
5. The message "CD POWER ON" or "CD POWER OFF" will be displayed on the fluorescent indicator tube.

### [CD TRAY LOCK MODE]

- This mode let you lock the disc tray. When this mode is activated, the disc tray will not open when [OPEN/CLOSE] button or [EX-CHANGE] button is pressed. The message "LOCKED" will be displayed on the fluorescent indicator tube.

**Procedure:**
1. Press [I / ⏻] button to turn the set ON.
2. Select CD function.
3. Press and hold [■] (CD) button and [⏏ OPEN/CLOSE] button simultaneously until "LOCKED" or "UNLOCKED" displayed on the fluorescent indicator tube (around 5 seconds).

### [VACS DISPLAY]

- This mode is used to check the VACS level.

**Procedure:**
1. Press [I / ⏻] button to turn on the system.
2. Press [▶▶] (iPod) button, [TUNER MEMORY] button and [DISC 3] button simultaneously.
3. During the VACS Level Display Mode, the fluorescent indicator tube displays "VACSx APy". "x" represent VACS level which is triggered by signal level, and "y" represent APVACS (Abuse Protection VACS) level which is triggered.

# SECTION 5
# ELECTRICAL ADJUSTMENTS

## CD SECTION

**Note:**
1. CD Block is basically designed to operate without adjustment. Therefore, check each item in order given.
2. Use YEDS-18 (3-702-101-01) unless otherwise indicated.
3. Use an oscilloscope with more than 10MΩ impedance.
4. Clean the object lens by an applicator with neutral detergent when the signal level is low than specified value with the following checks.

### S-Curve Check

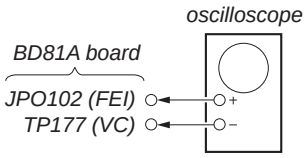


**Procedure:**
1. Connect oscilloscope to JPO102 (FEI) and TP177 (VC).
2. Press the [I / ⏻] button to turn the power ON.
3. Load a disc (YEDS-18) and actuate the focus search. (In consequence of open and close the disc tray, actuate the focus search)
4. Confirm that the oscilloscope waveform (S-curve) is symmetrical between A and B. And confirm peak to peak level within 3 ±0.5 Vp-p.

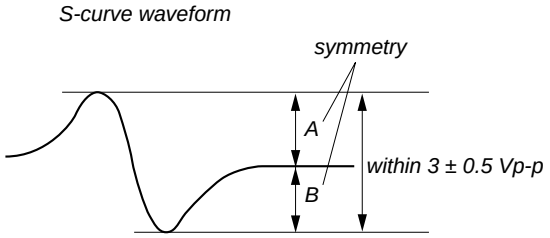


**Note:**
- Try to measure several times to make sure than the ratio of A : B or B : A is more than 10 : 7.
- Take sweep time as long as possible and light up the brightness to obtain best waveform.

### RF Level Check

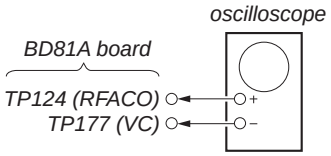


**Procedure:**
1. Connect oscilloscope to TP124 (RFACO) and TP177 (VC).
2. Press the [I / ⏻] button to turn the power ON.
3. Load a disc (YEDS-18) and playback.
4. Confirm that oscilloscope waveform is clear and check RFAC signal level is correct or not.

**Note:** Clear RF signal waveform means that the shape "◊" can be clearly distinguished at the center of the waveform.

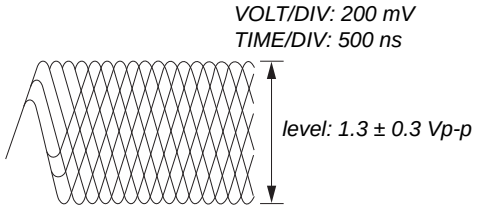


**Checking Location:**

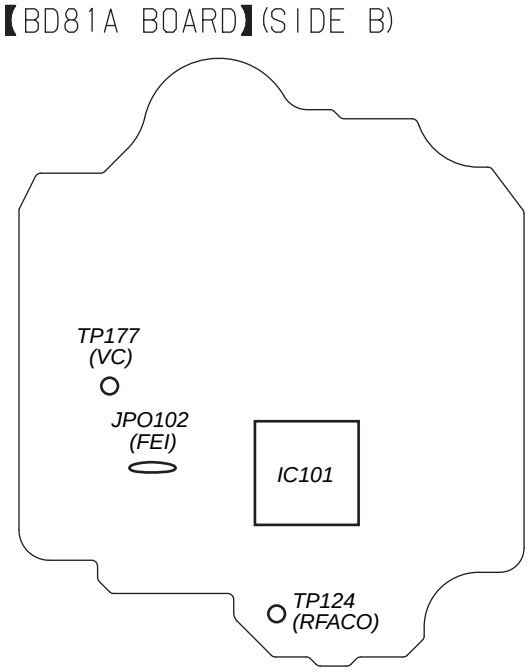

# SECTION 6
# DIAGRAMS

- **Circuit Boards Location**

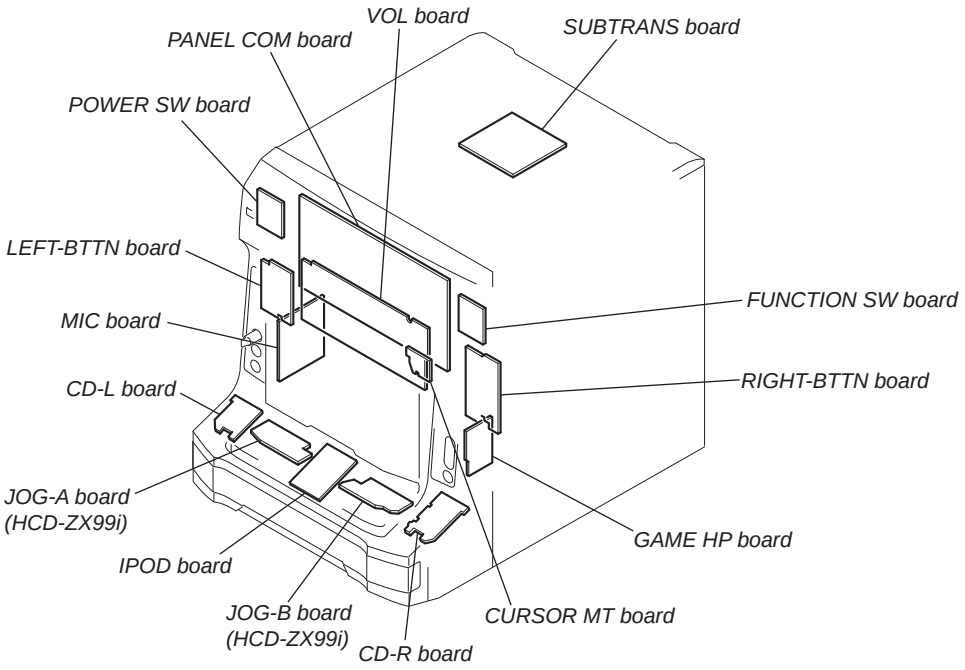


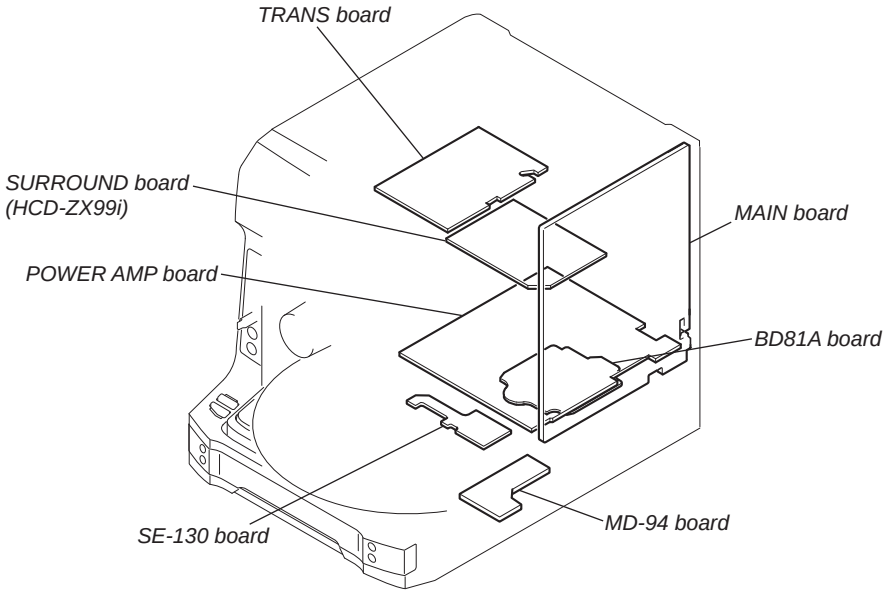

## THIS NOTE IS COMMON FOR PRINTED WIRING BOARDS AND SCHEMATIC DIAGRAMS. (In addition to this, the necessary note is printed in each block.)

### For Printed Wiring Boards.

**Note:**

- ○——: parts extracted from the component side.
- ——: parts extracted from the conductor side.
- ○ : Through hole.
- : Pattern from the side which enables seeing. (The other layers' patterns are not indicated.)

| **Caution:** | |
|---|---|
| Pattern face side: (SIDE B) | Parts on the pattern face side seen from the pattern face are indicated. |
| Parts face side: (SIDE A) | Parts on the parts face side seen from the parts face are indicated. |

### For Schematic Diagrams.

**Note:**

- All capacitors are in μF unless otherwise noted. (p: pF) 50 WV or less are not indicated except for electrolytics and tantalums.
- All resistors are in Ω and 1/4 W or less unless otherwise specified.
- % : indicates tolerance.
- △ : internal component.
- : nonflammable resistor.
- : fusible resistor.
- : panel designation.

| **Note:** | **Note:** |
|---|---|
| The components identified by mark ⚠ or dotted line with mark ⚠ are critical for safety. Replace only with part number specified. | Les composants identifiés par une marque ⚠ sont critiques pour la sécurité. Ne les remplacer que par une piéce portant le numéro spécifié. |

- : B+ Line.
- : B– Line.
- Voltages and waveforms are dc with respect to ground under no-signal (detuned) conditions.
  no mark: FM
  < >: CD PLAY
  ∗ : Impossible to measure
- Voltages are taken with VOM (Input impedance 10 MΩ). Voltage variations may be noted due to normal production tolerances.
- Waveforms are taken with a oscilloscope. Voltage variations may be noted due to normal production tolerances.
- Circled numbers refer to waveforms.
- Signal path.
  : TUNER (FM/AM)
  : VIDEO
  : CD (ANALOG OUT)
  : CD (DIGTAL OUT)
  : MIC

- **Waveforms**

**– MAIN Board –**

① **IC401 ⑪ (XC-OUT)**

*1 V/DIV, 10 μsec/DIV*

② **IC401 ⑬ (X-OUT)**

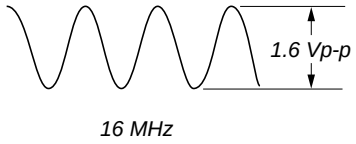


*0.5 V/DIV, 50 nsec/DIV*

**– PANEL COM Board –**

① **IC901 ㉒ (X OUT)**

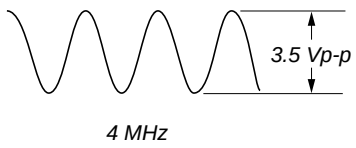


*1 V/DIV, 50 nsec/DIV*

## 6-1. BLOCK DIAGRAM – CD SERVO Section –

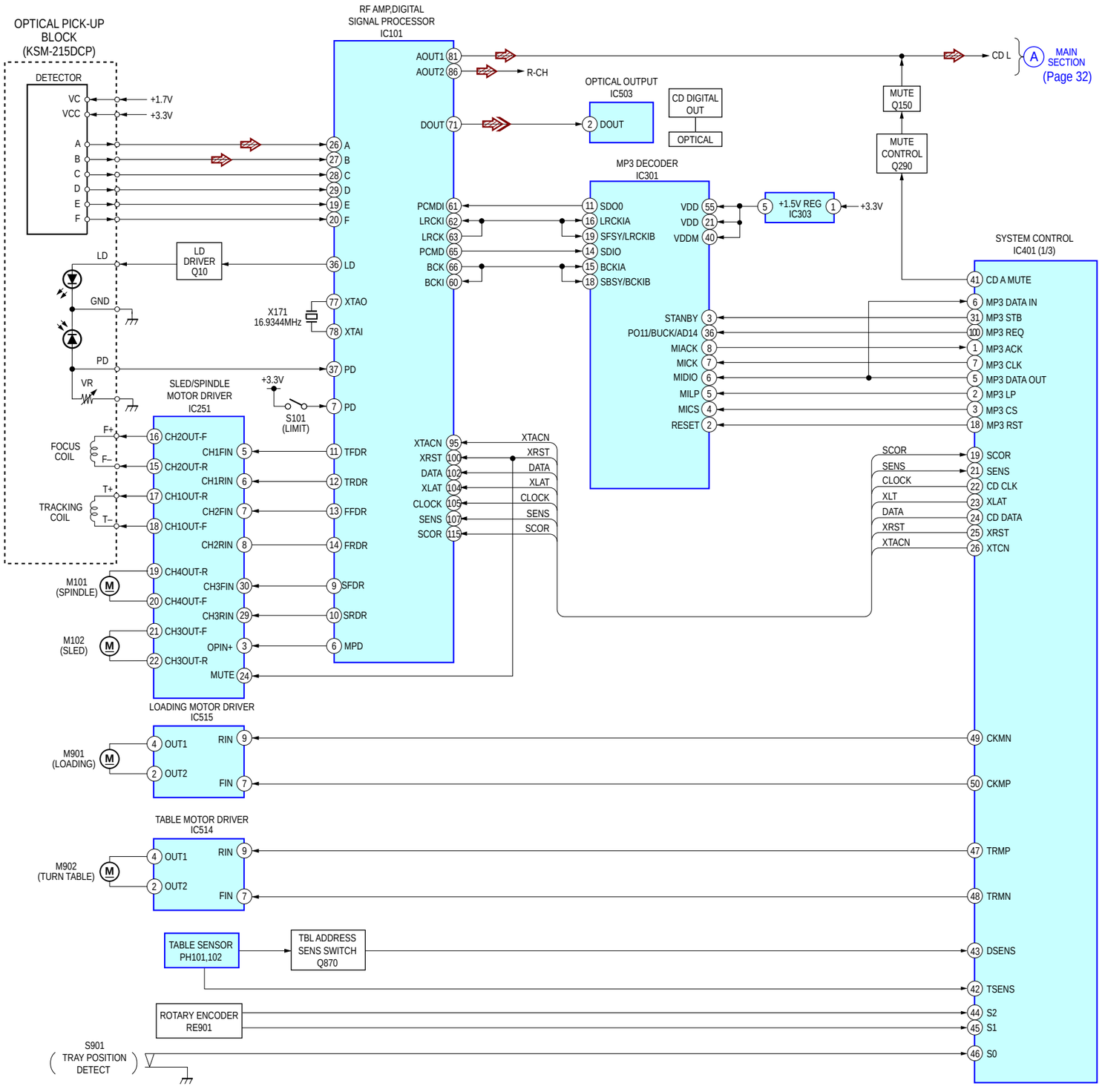


- R-ch is omitted due to same as L-ch.
- Signal path
  - ⇨ : CD (ANALOG OUT)
  - ⇨ : CD (DIGITAL OUT)

## 6-2. BLOCK DIAGRAM – MAIN Section –

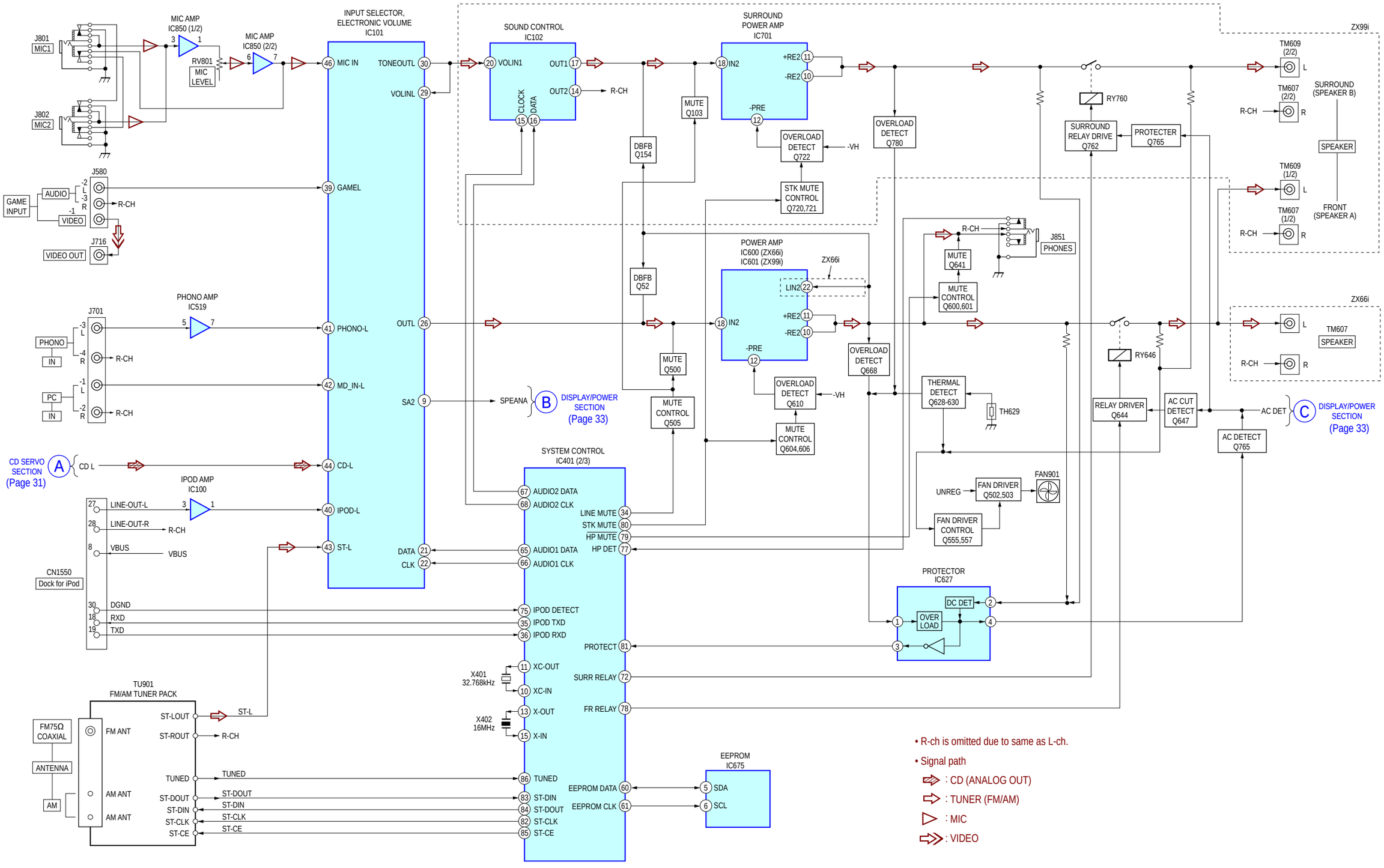

## 6-3. BLOCK DIAGRAM – DISPLAY/POWER Section –

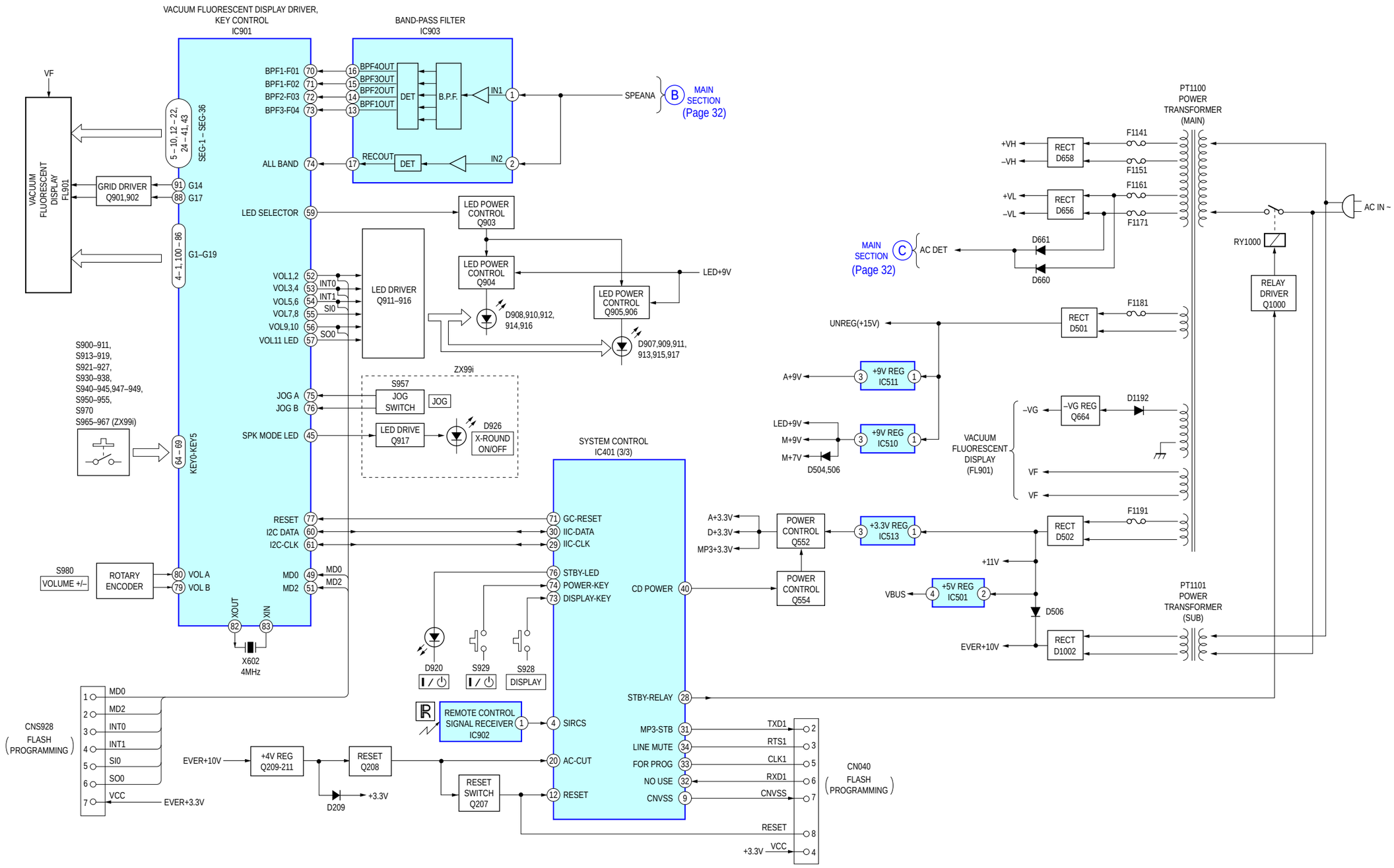

## 6-4. PRINTED WIRING BOARD – BD Section –

• See page 29 for Circuit Boards Location. • : Uses unleaded solder.

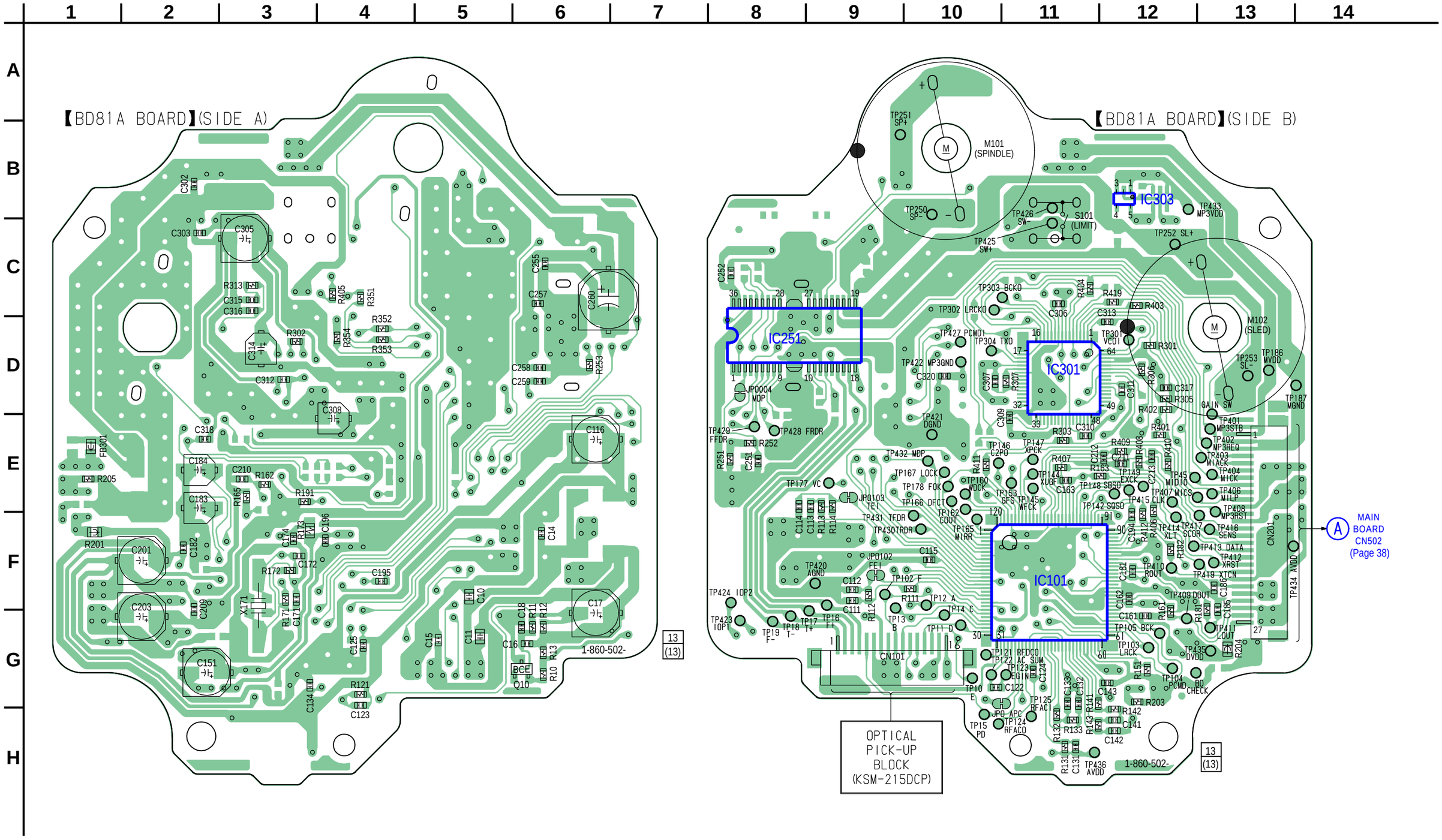


• **Semiconductor Location**

| Ref. No. | Location |
|---|---|
| (IC101) | F-11 |
| (IC251) | D-8 |
| (IC301) | D-11 |
| (IC303) | B-12 |
| Q10 | G-6 |

( ): SIDE B

## 6-5. SCHEMATIC DIAGRAM – BD Section –

• See page 60 for IC Block Diagrams. • See page 65 for IC Pin Function Descriptions.

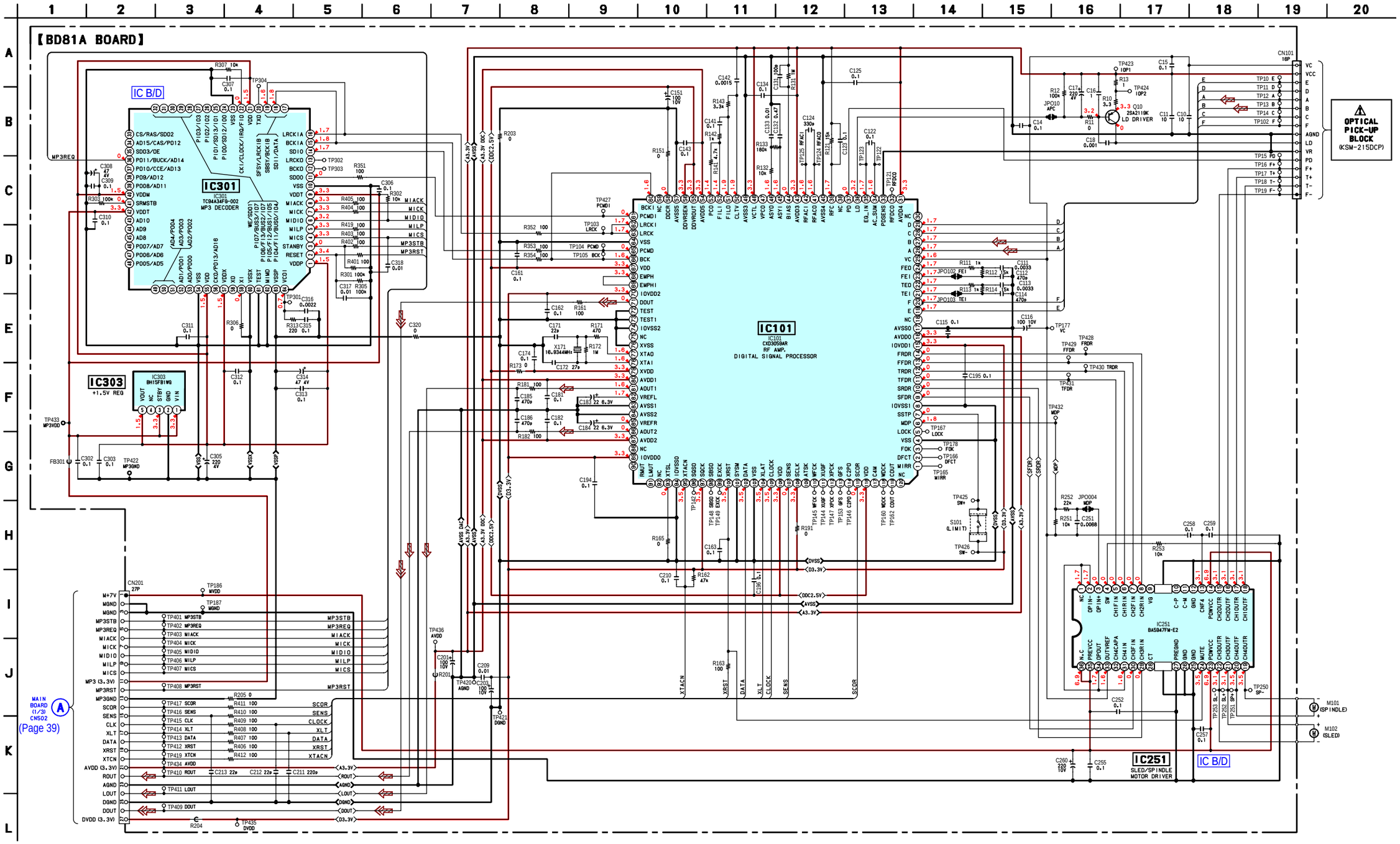

## 6-6. PRINTED WIRING BOARDS – LOADING Section –

• See page 29 for Circuit Boards Location. • : Uses unleaded solder.

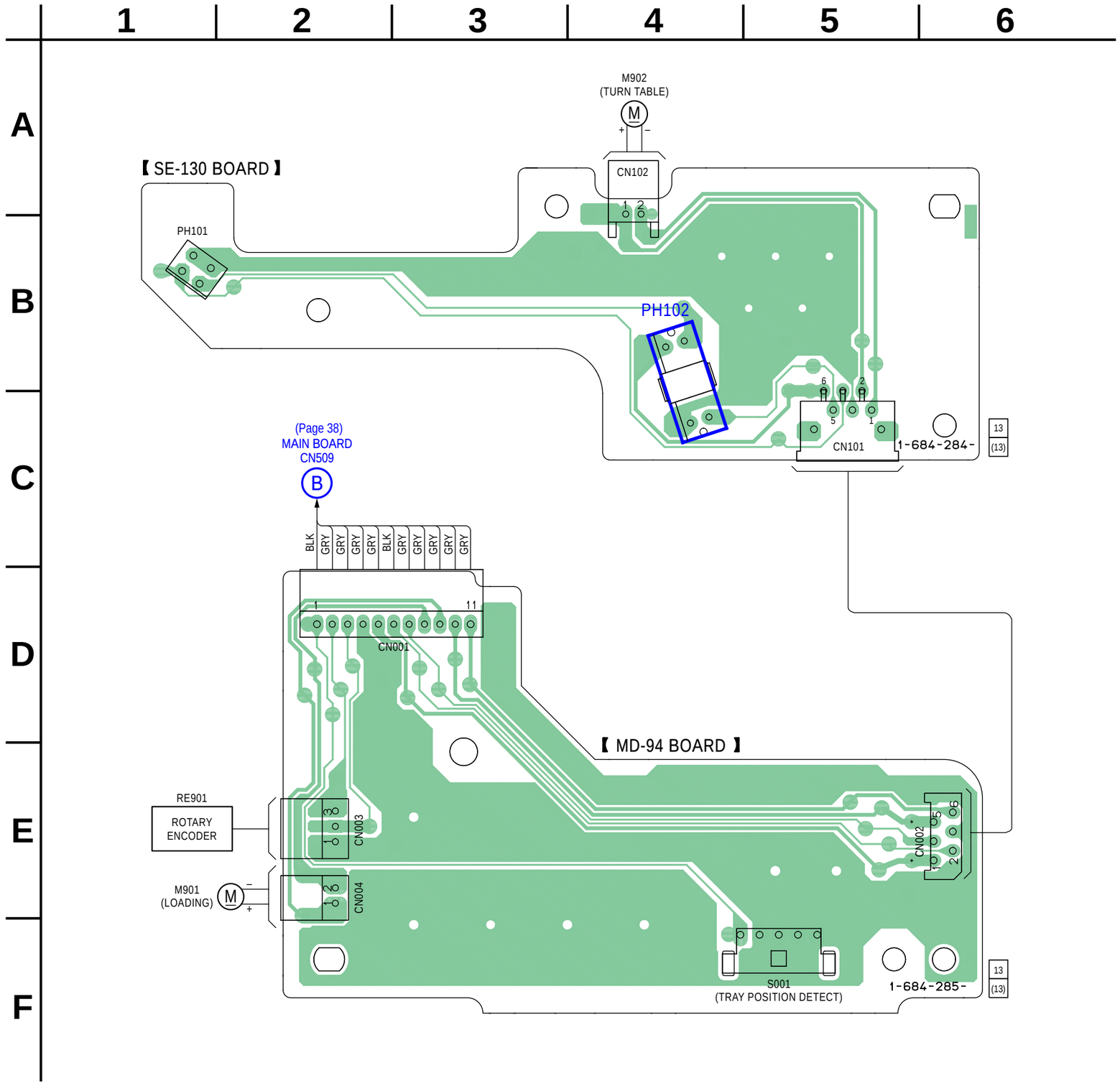

## 6-7. SCHEMATIC DIAGRAM – LOADING Section –

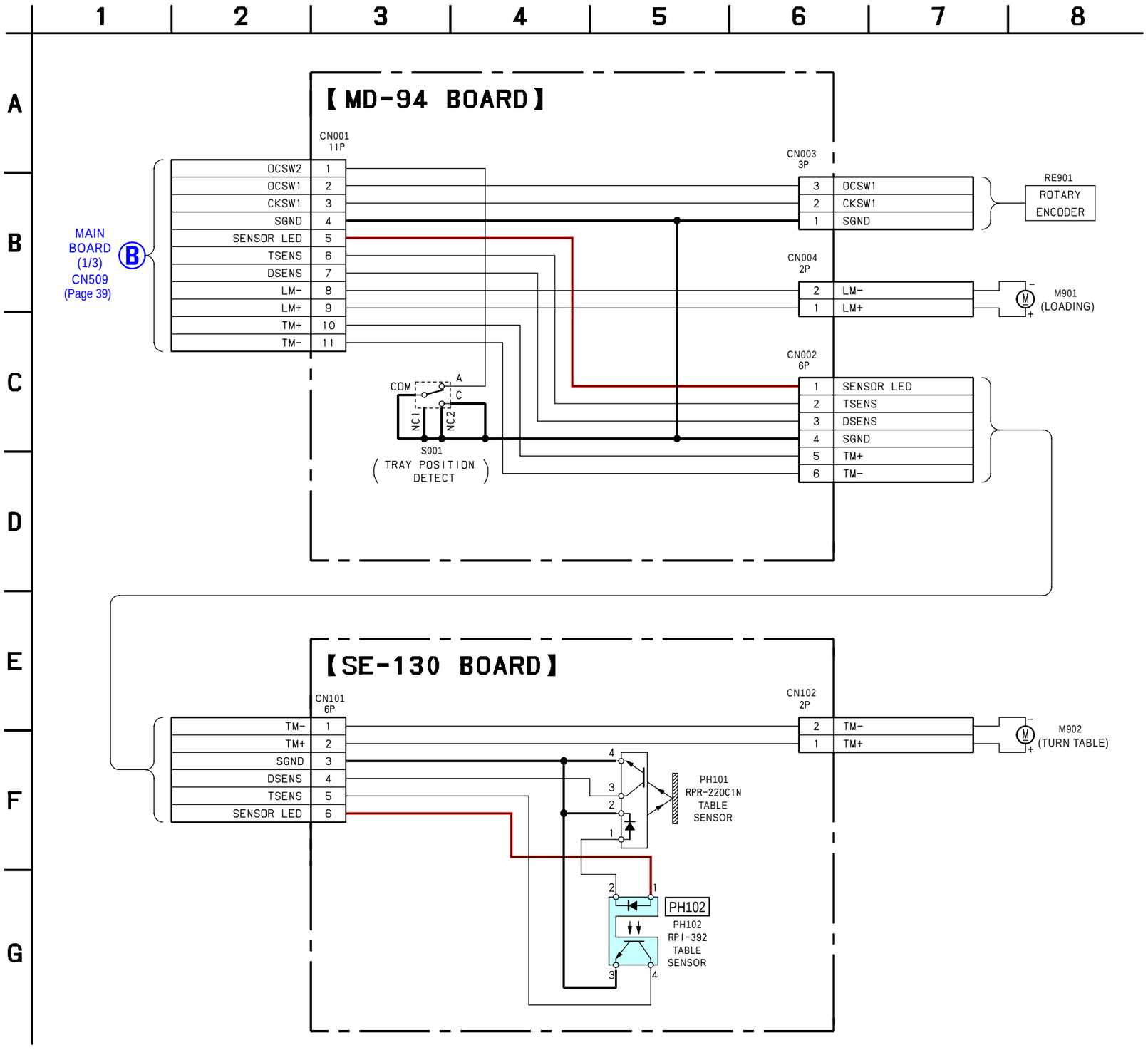

## 6-8. PRINTED WIRING BOARD – MAIN Section –

• See page 29 for Circuit Boards Location. • : Uses unleaded solder.

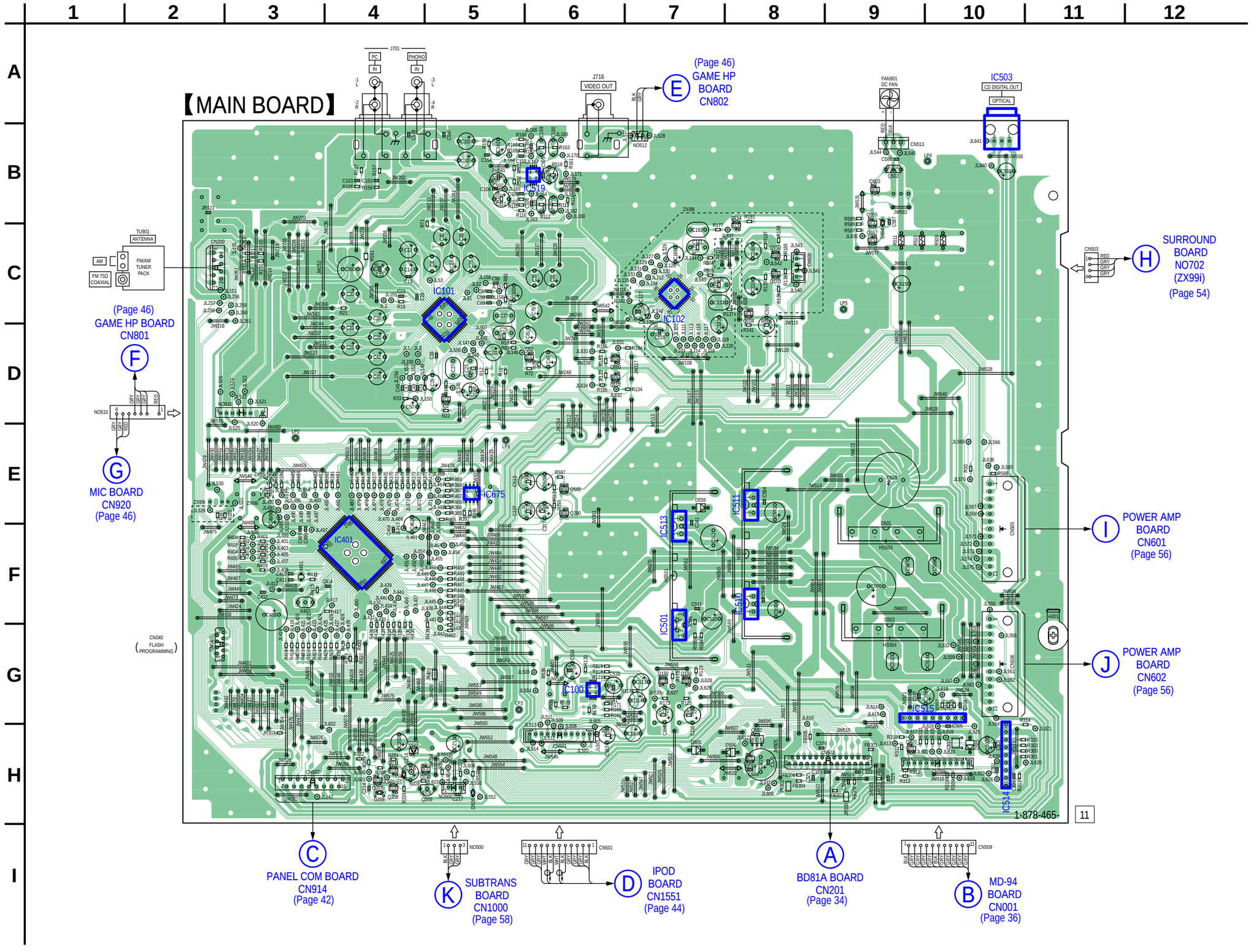


• **Semiconductor Location**

| Ref. No. | Location |
|---|---|
| D208 | H-4 |
| D209 | H-4 |
| D210 | H-4 |
| D501 | F-9 |
| D502 | G-9 |
| D504 | H-8 |
| D505 | H-7 |
| D506 | H-5 |
| D554 | B-9 |
| D555 | H-10 |
| D559 | E-7 |
| IC100 | G-6 |
| IC101 | C-5 |
| (IC102) | C-7 |
| IC401 | F-4 |
| IC501 | F-7 |
| IC503 | B-10 |
| IC510 | F-8 |
| IC511 | E-8 |
| IC513 | F-7 |
| IC514 | H-10 |
| IC515 | G-10 |
| IC519 | B-6 |
| IC675 | E-5 |
| Q2 | D-5 |
| Q52 | D-6 |
| Q100 | G-7 |
| Q102 | D-6 |
| (Q103) | C-8 |
| (Q104) | C-8 |
| Q150 | G-7 |
| (Q153) | C-8 |
| (Q154) | C-8 |
| Q207 | H-4 |
| Q208 | H-4 |
| Q209 | H-5 |
| Q210 | H-5 |
| Q211 | H-4 |
| Q290 | E-6 |
| Q500 | E-6 |
| Q502 | B-9 |
| Q503 | B-9 |
| Q505 | E-6 |
| Q552 | H-8 |
| Q554 | H-8 |
| Q555 | B-9 |
| Q557 | C-9 |
| Q870 | H-9 |

( ): HCD-ZX99i only

## 6-9. SCHEMATIC DIAGRAM – MAIN Section (1/3) – • See page 60 for IC Block Diagrams.

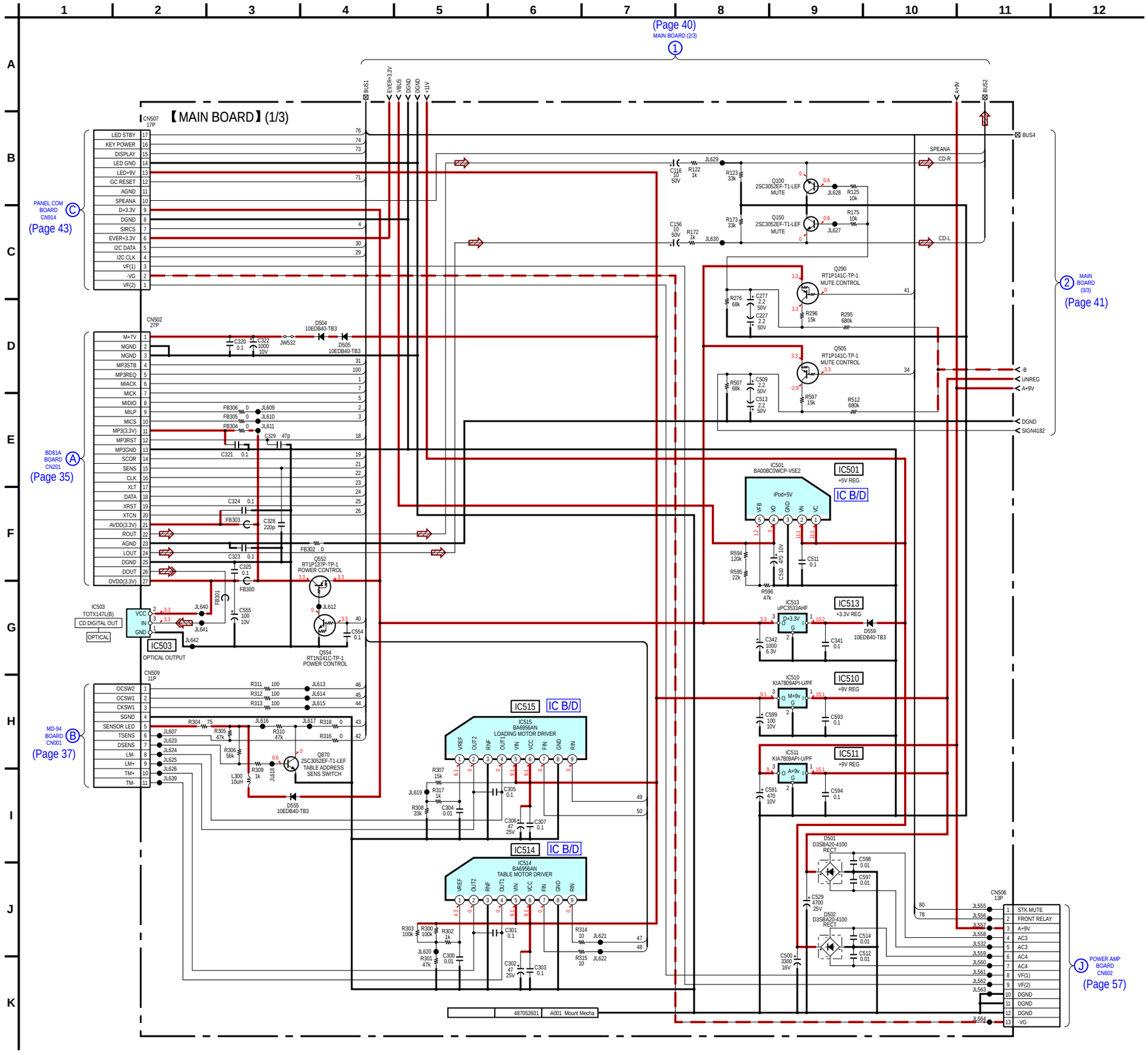

## 6-10. SCHEMATIC DIAGRAM – MAIN Section (2/3) –

• See page 30 for Waveforms • See page 68 for IC Pin Function Descriptions.

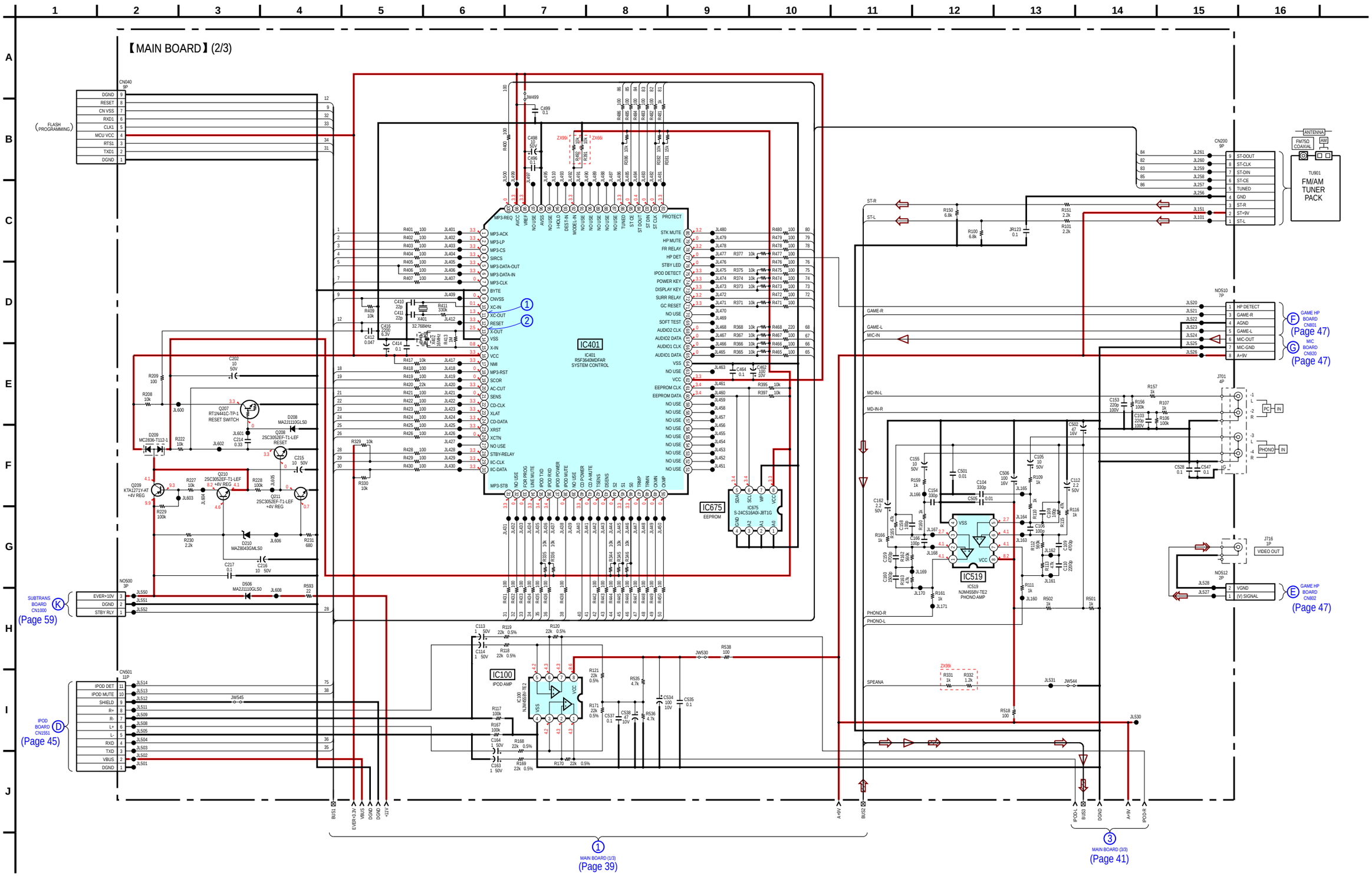

## 6-11. SCHEMATIC DIAGRAM – MAIN Section (3/3) – • See page 61 for IC Block Diagrams.

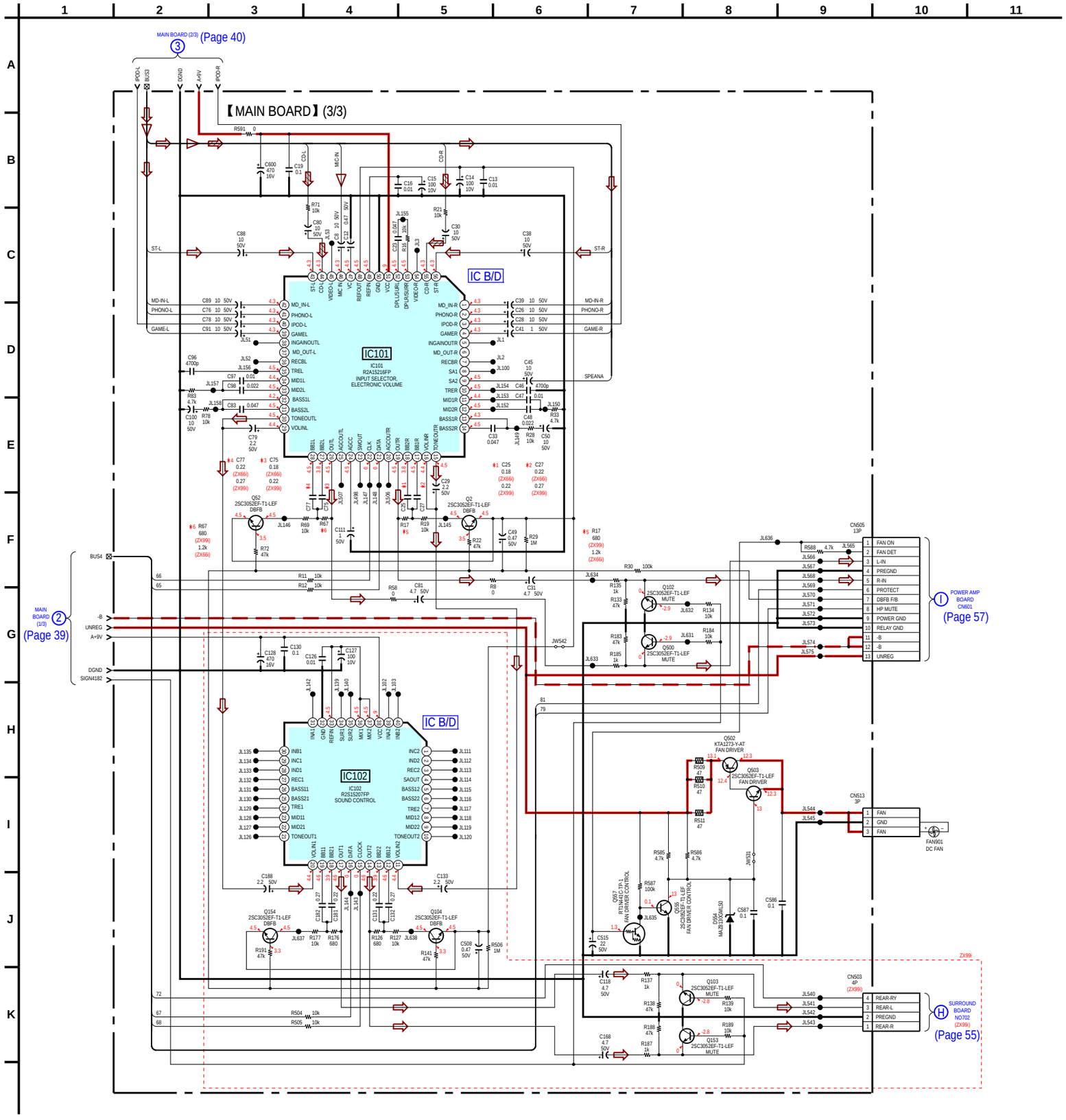

## 6-12. PRINTED WIRING BOARDS – PANEL Section –

• See page 29 for Circuit Boards Location. • : Uses unleaded solder.

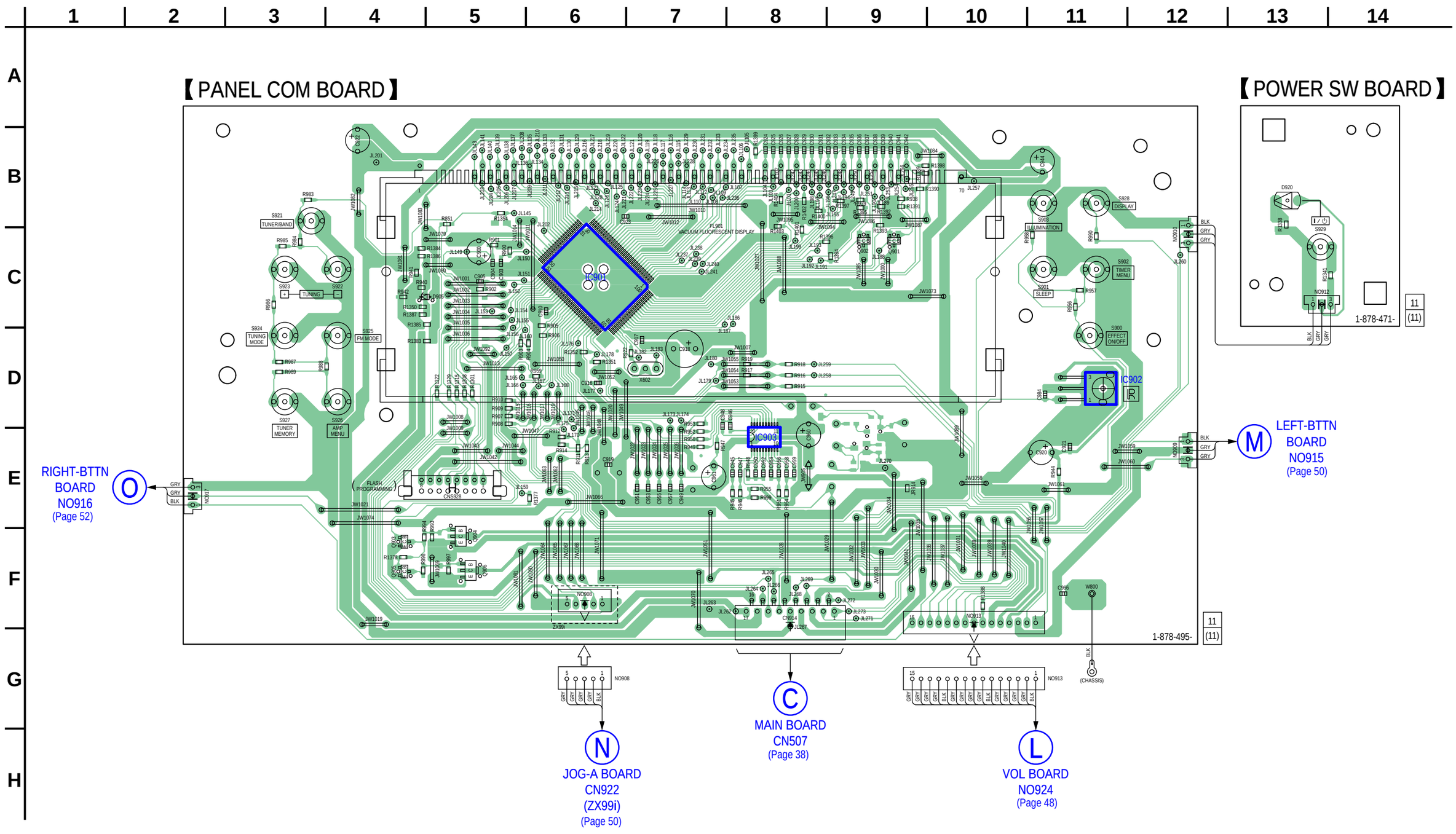


• **Semiconductor Location**

| Ref. No. | Location | Ref. No. | Location |
|---|---|---|---|
| D905 | C-5 | Q901 | C-9 |
| D920 | B-13 | Q902 | C-9 |
| | | Q903 | F-4 |
| IC901 | C-6 | Q904 | F-5 |
| IC902 | D-11 | Q905 | F-4 |
| IC903 | E-8 | Q906 | F-5 |

## 6-13. SCHEMATIC DIAGRAM – PANEL Section –

• See page 30 for Waveforms. • See page 62 for IC Block Diagrams. • See page 70 for IC Pin Function Descriptions.

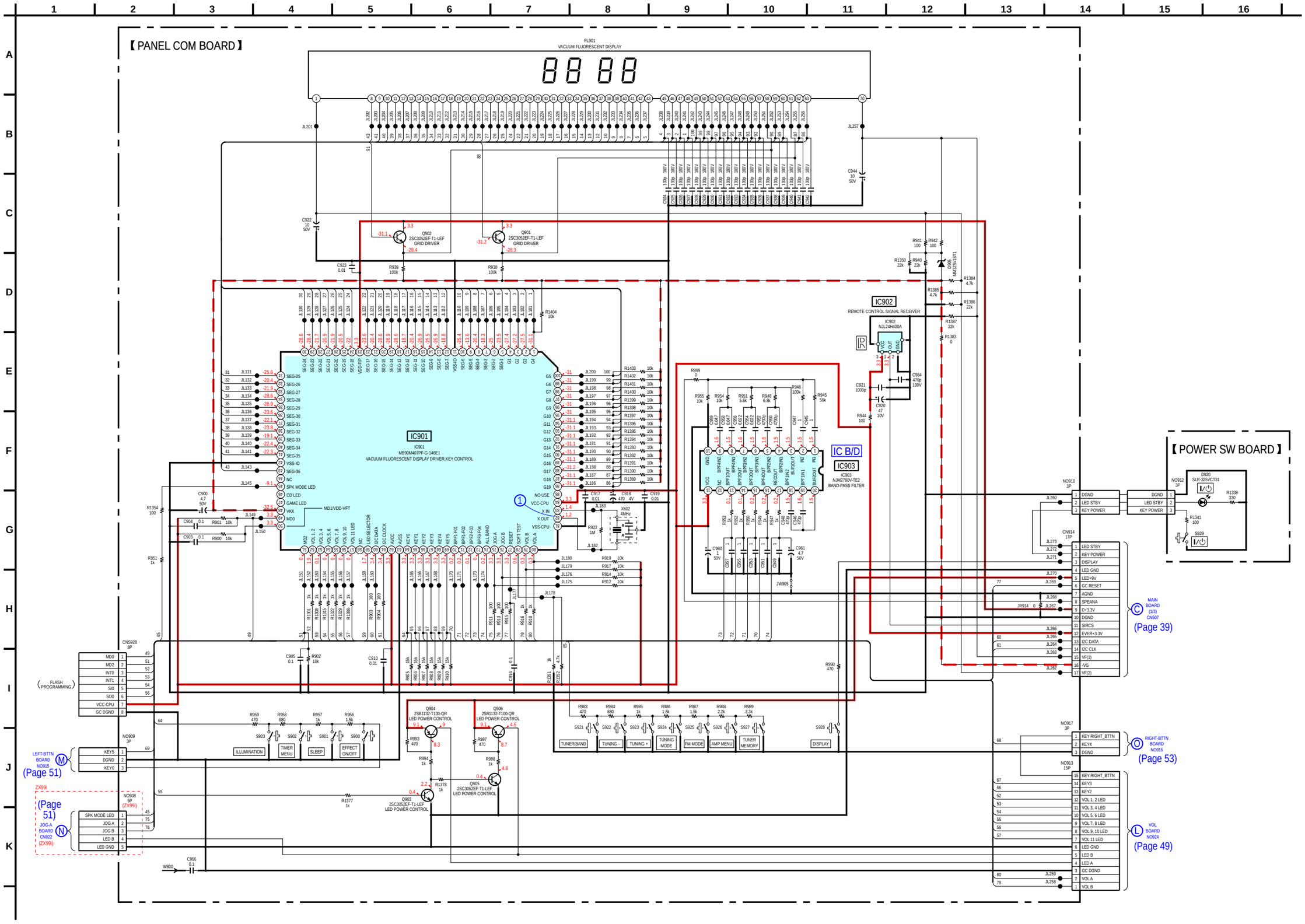

6-14. PRINTED WIRING BOARD – IPOD Section – • See page 29 for Circuit Boards Location. • : Uses unleaded solder.

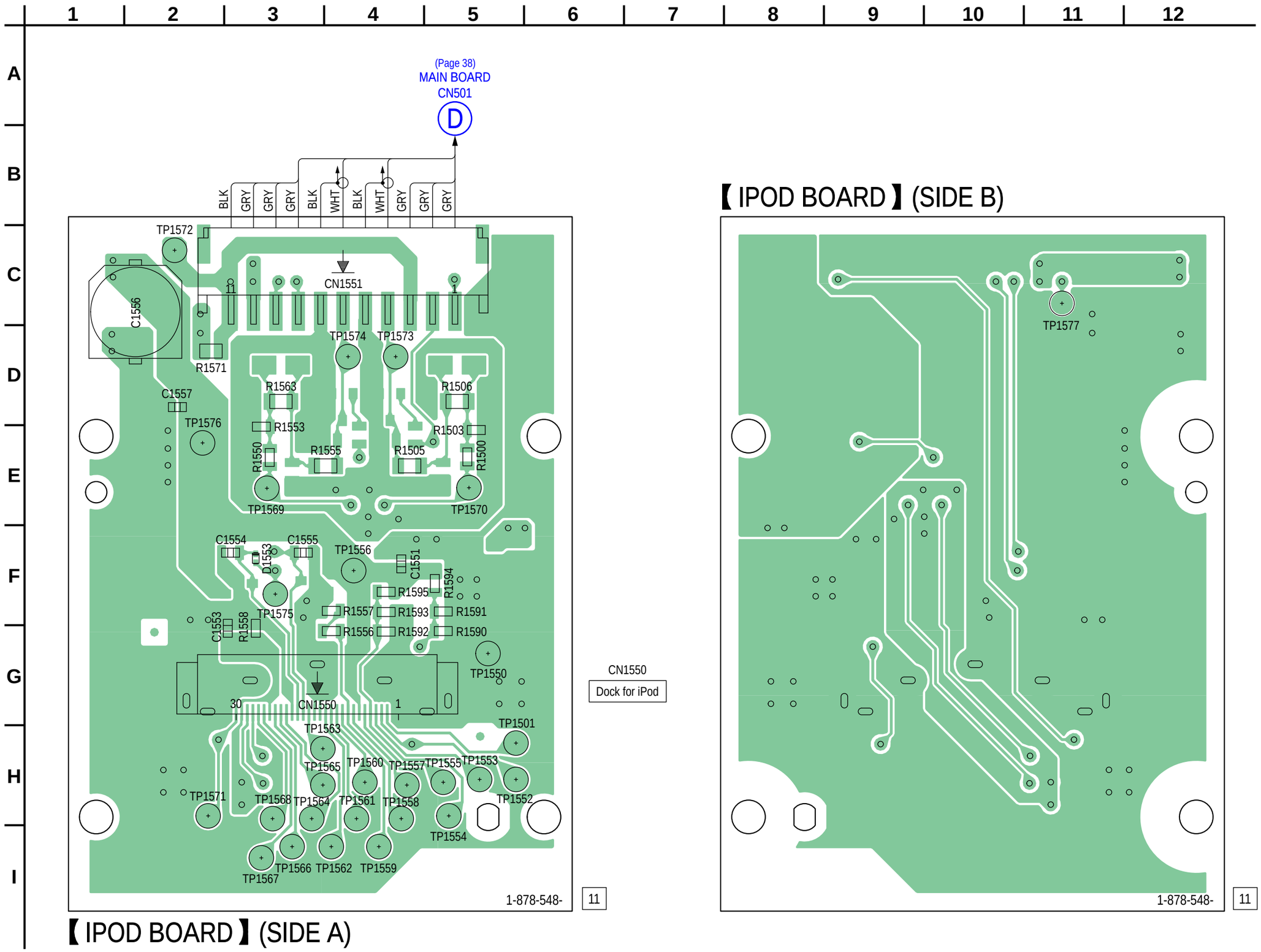

## 6-15. SCHEMATIC DIAGRAM – IPOD Section –

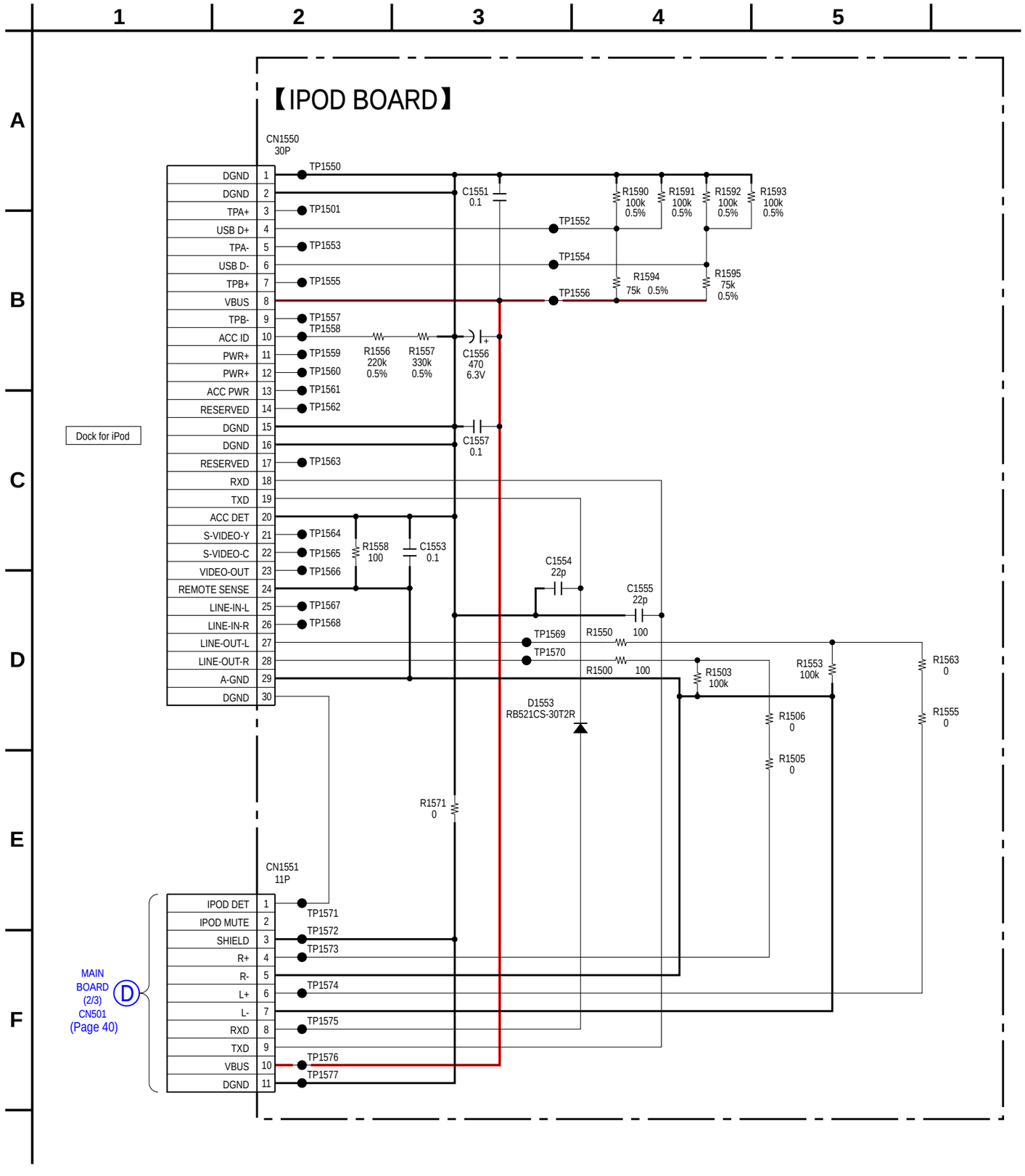

## 6-16. PRINTED WIRING BOARDS – JACK Section –

• See page 29 for Circuit Boards Location. • : Uses unleaded solder.

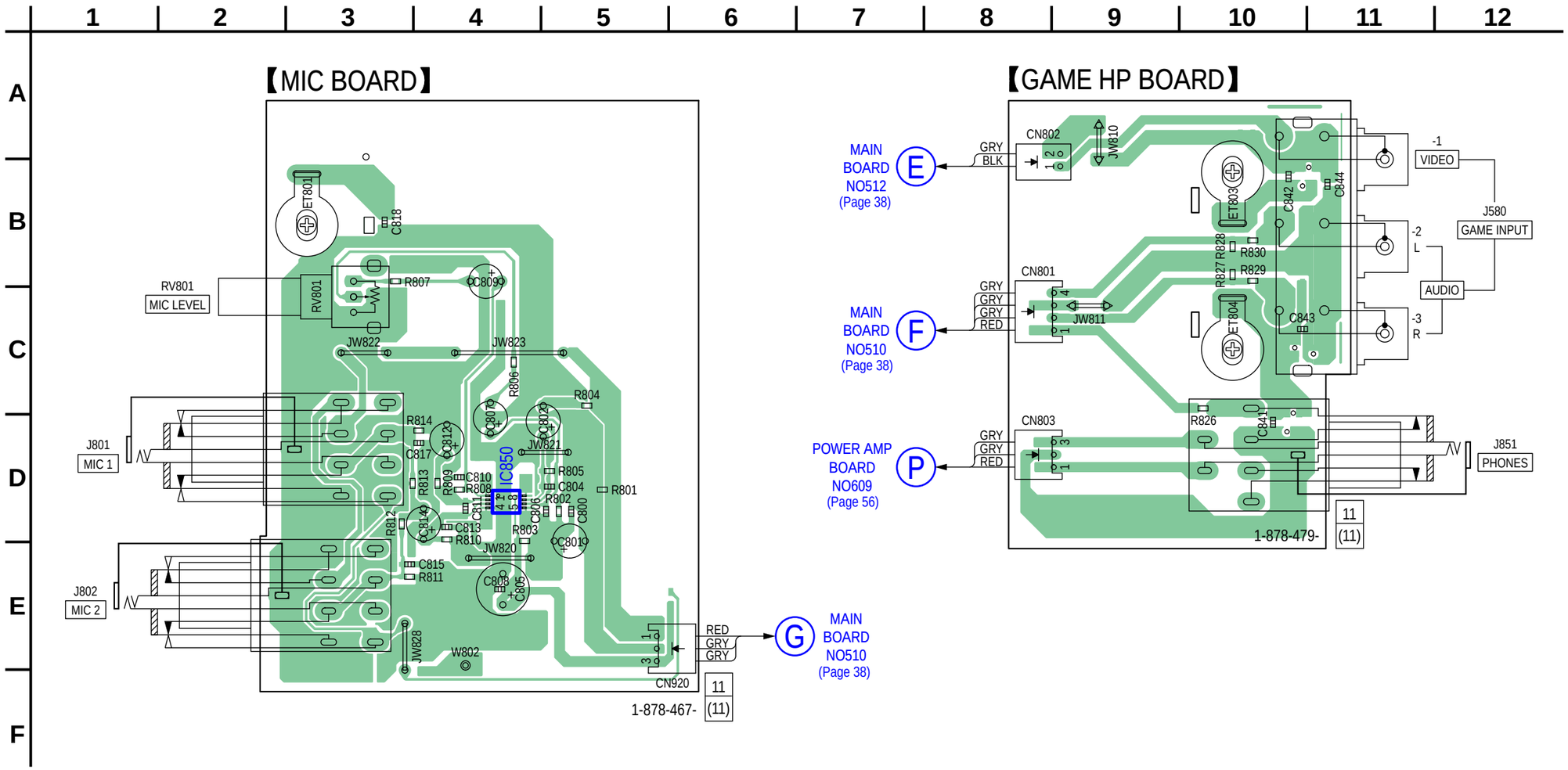

## 6-17. SCHEMATIC DIAGRAM – JACK Section –

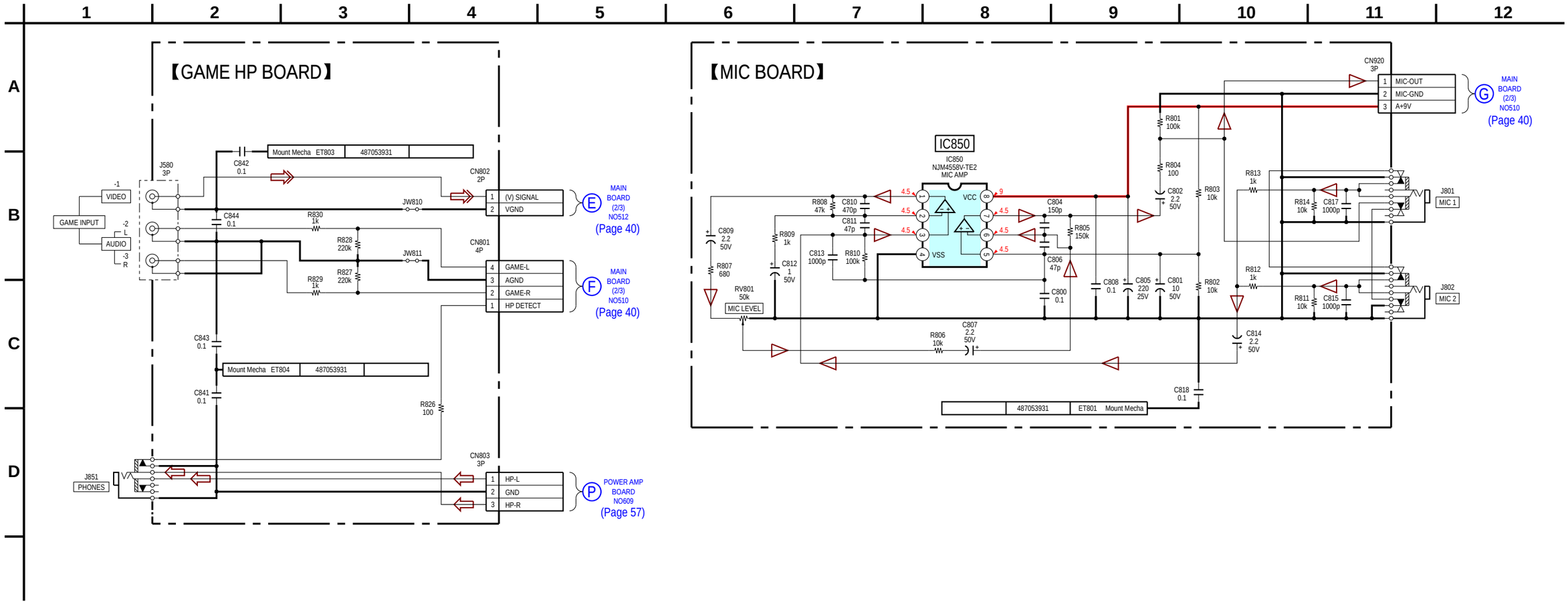

## 6-18. PRINTED WIRING BOARDS – VOLUME Section –

• See page 29 for Circuit Boards Location. • : Uses unleaded solder.

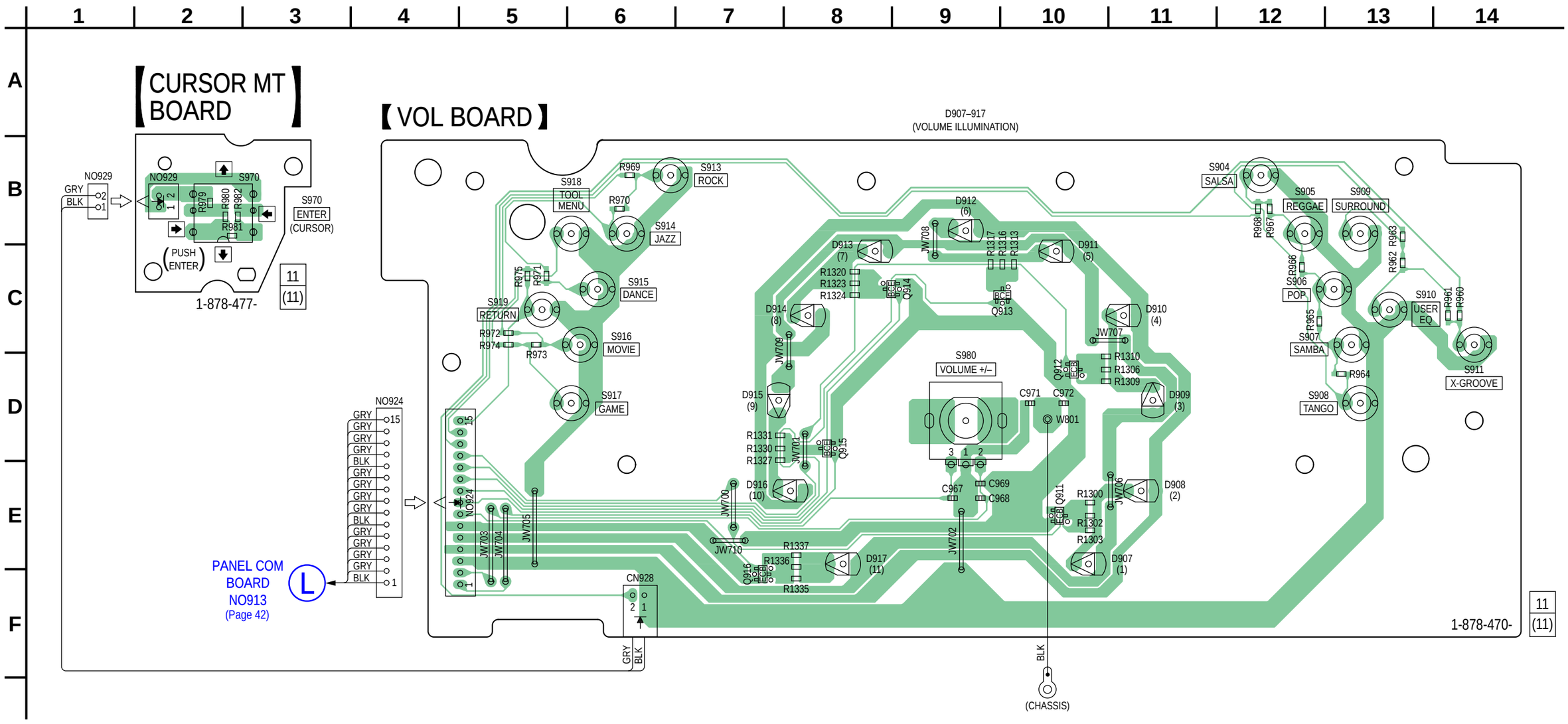


• **Semiconductor Location**

| Ref. No. | Location | Ref. No. | Location |
|---|---|---|---|
| D907 | E-10 | D916 | E-8 |
| D908 | E-11 | D917 | E-8 |
| D909 | D-11 | | |
| D910 | C-11 | Q911 | E-10 |
| D911 | C-10 | Q912 | D-10 |
| D912 | B-9 | Q913 | C-10 |
| D913 | C-8 | Q914 | C-8 |
| D914 | C-8 | Q915 | D-8 |
| D915 | D-7 | Q916 | F-7 |

## 6-19. SCHEMATIC DIAGRAM – VOLUME Section –

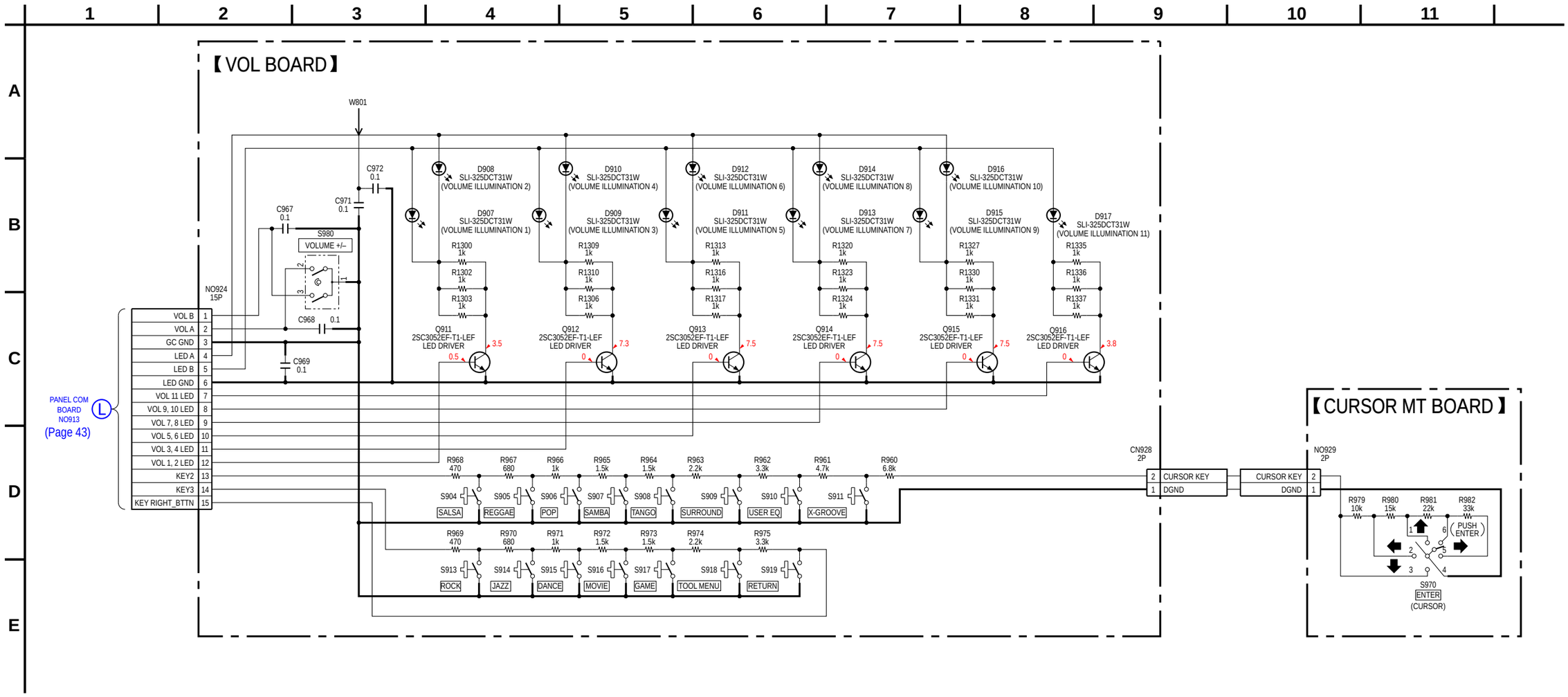

## 6-20. PRINTED WIRING BOARDS – LEFT BUTTON Section –

• See page 29 for Circuit Boards Location. • : Uses unleaded solder.

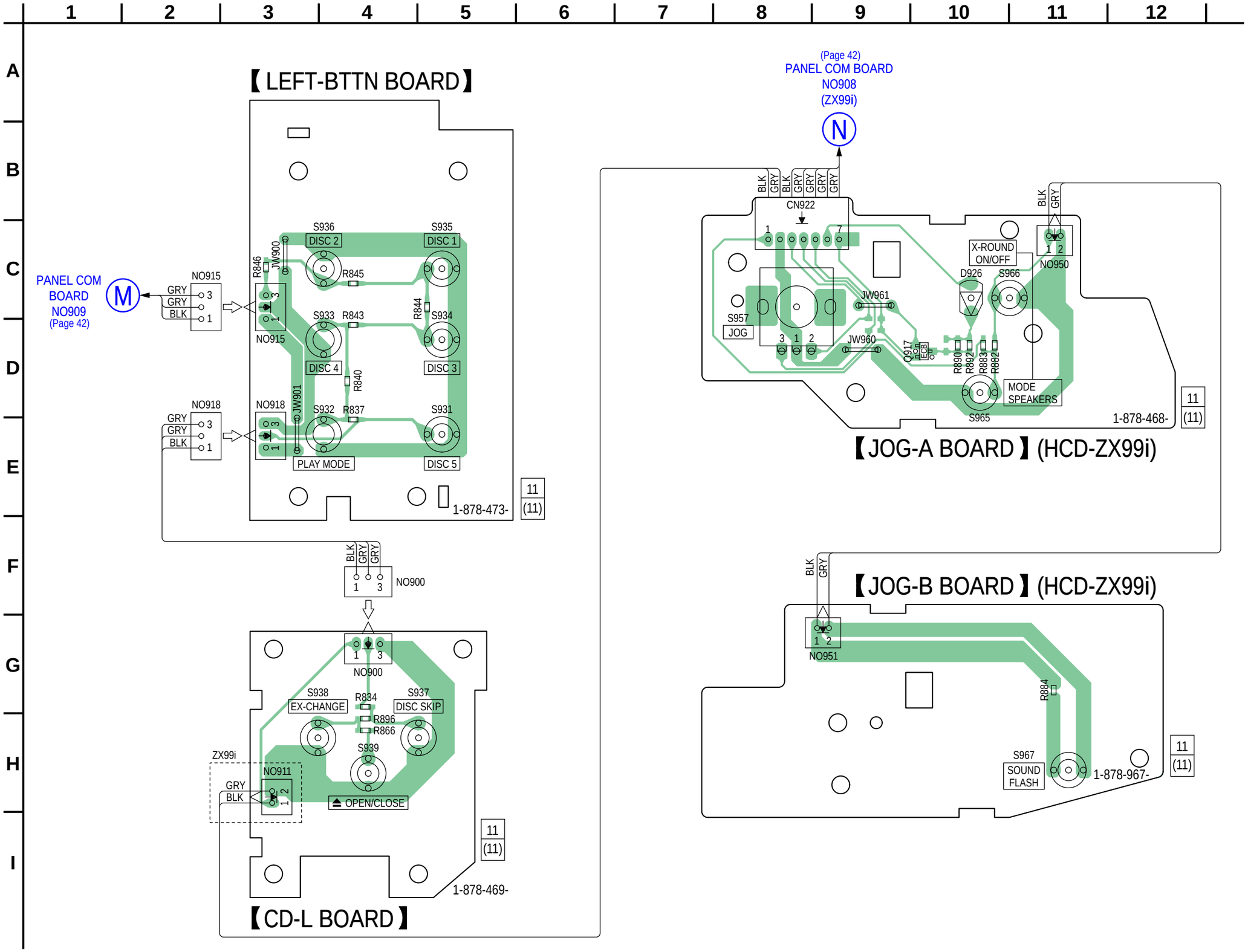

## 6-21. SCHEMATIC DIAGRAM – LEFT BUTTON Section –

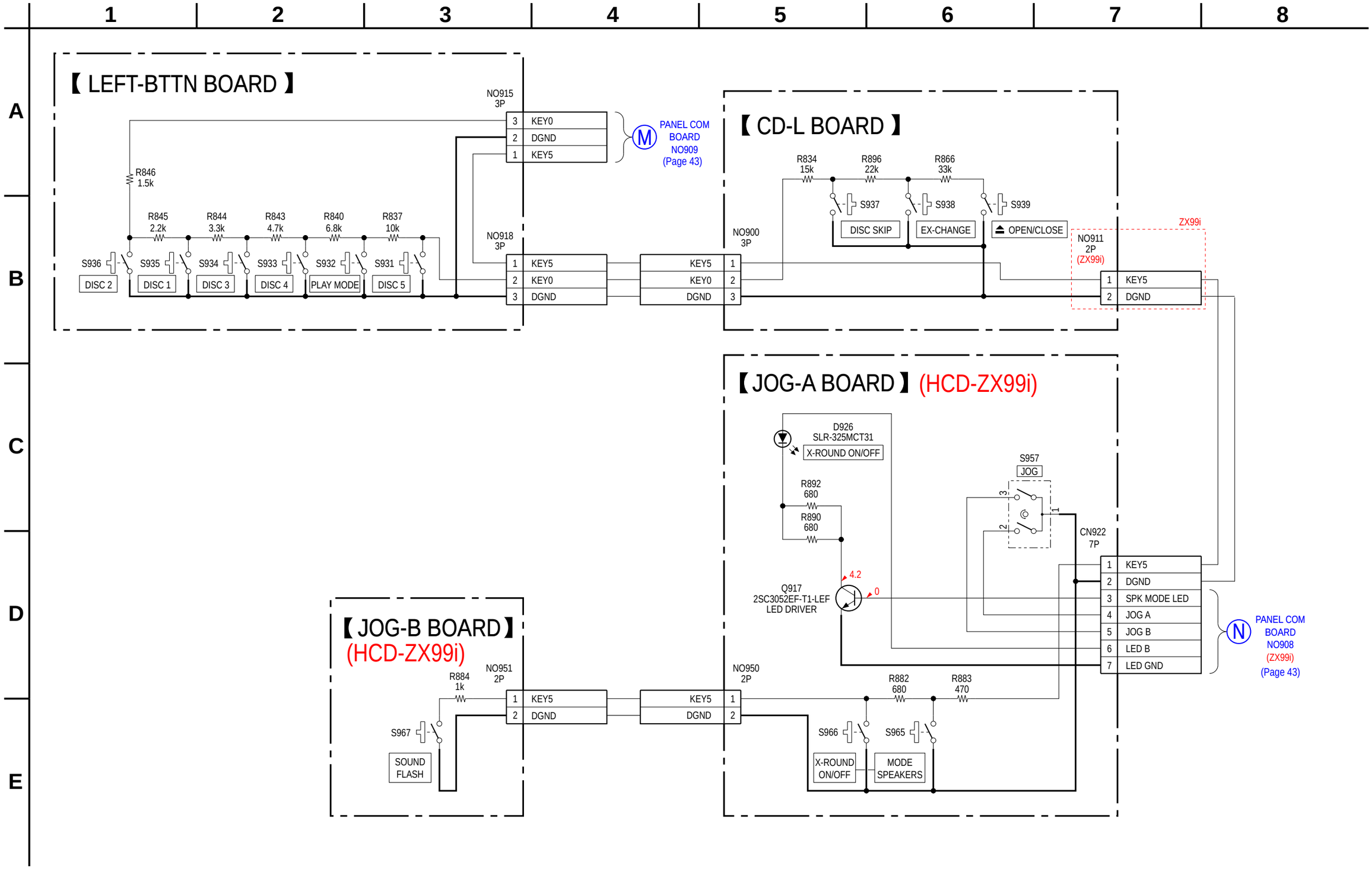

6-22. PRINTED WIRING BOARDS – RIGHT BUTTON Section – • See page 29 for Circuit Boards Location. • : Uses unleaded solder.

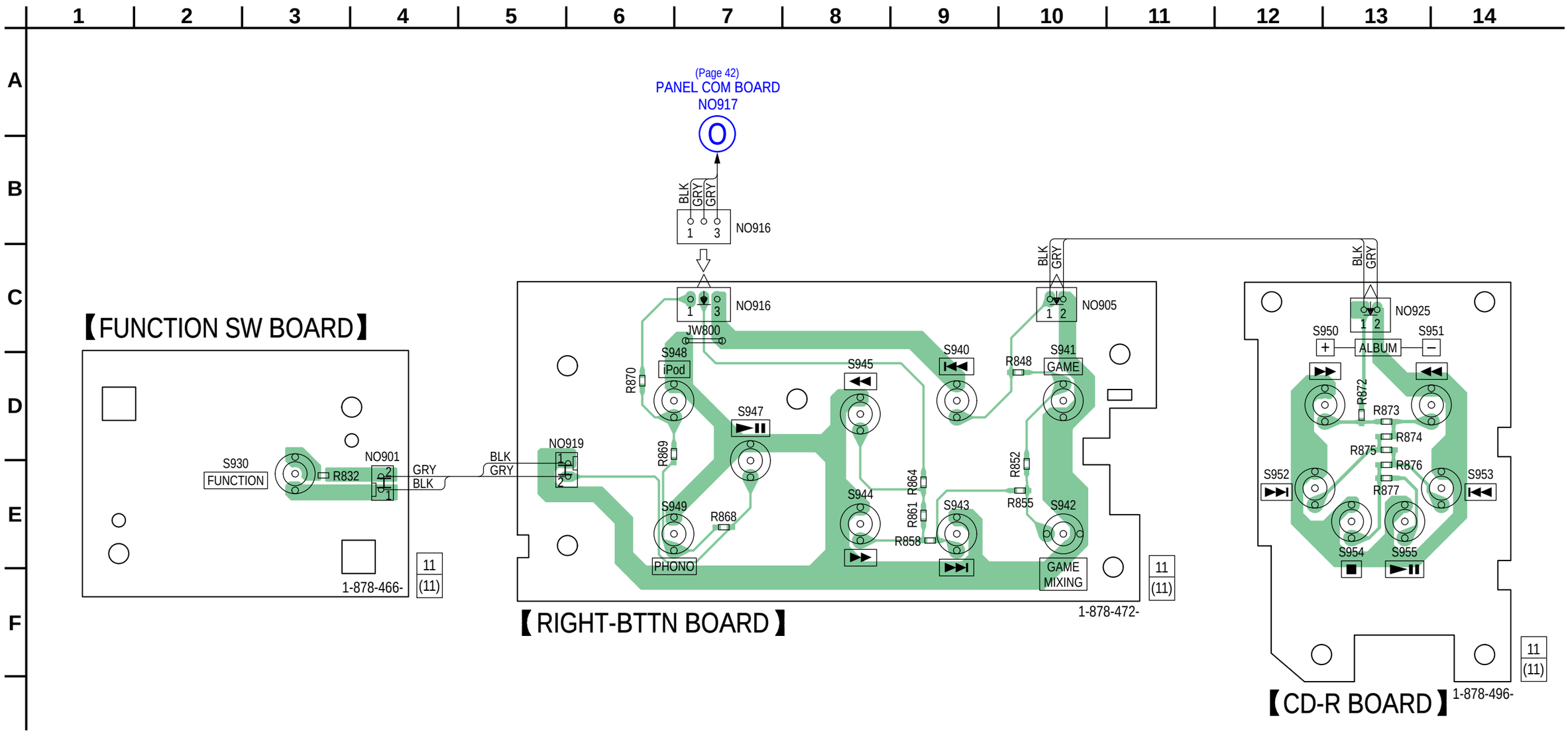

## 6-23. SCHEMATIC DIAGRAM – RIGHT BUTTON Section –

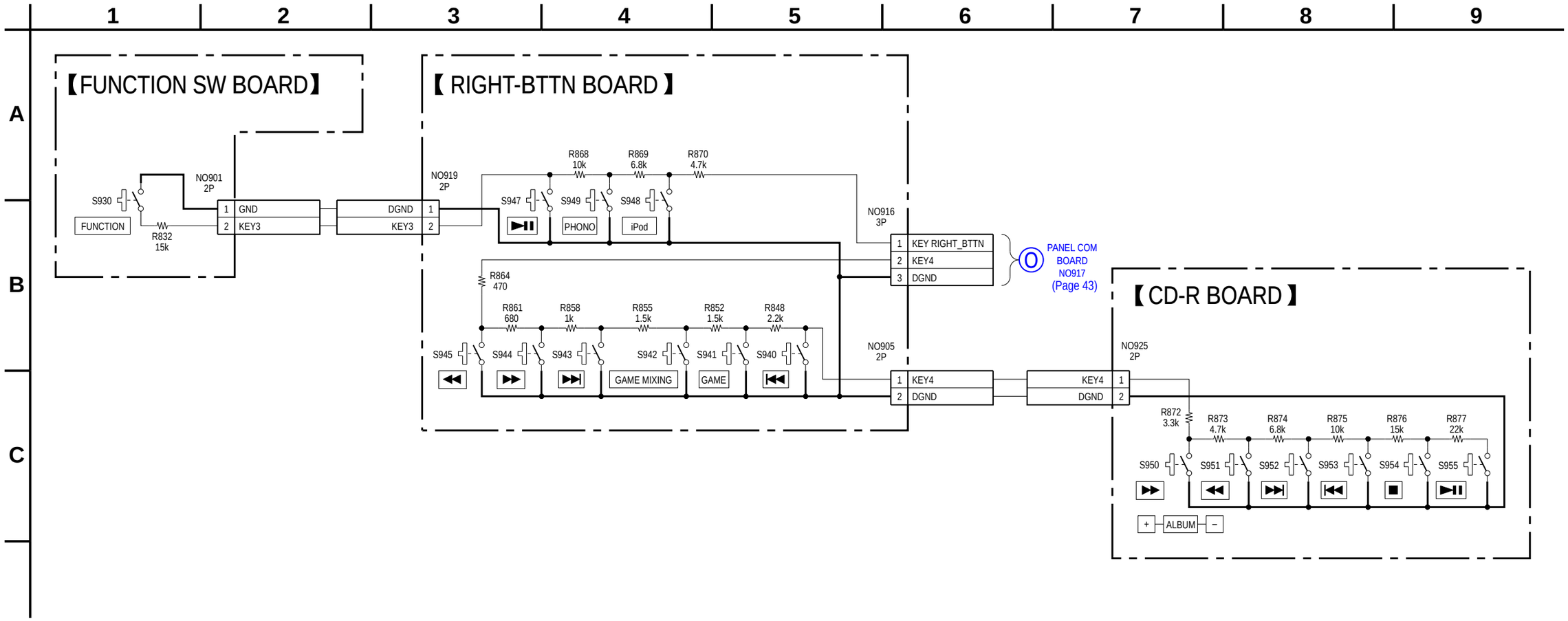

## 6-24. PRINTED WIRING BOARD – SURROUND Section (HCD-ZX99i) –

• See page 29 for Circuit Boards Location. • : Uses unleaded solder.

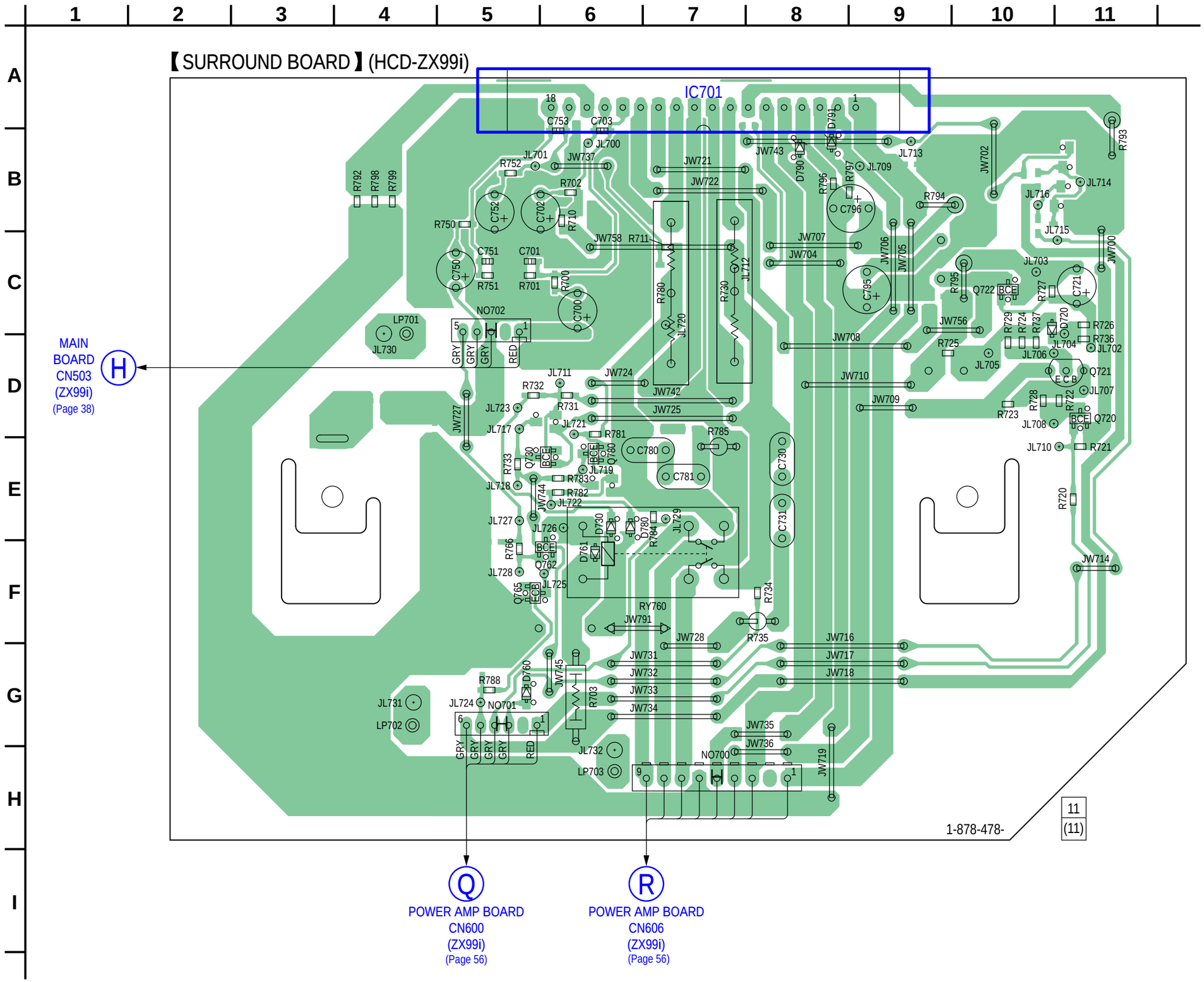


• **Semiconductor Location**

| Ref. No. | Location |
|---|---|
| D720 | C-10 |
| D730 | E-6 |
| D760 | G-5 |
| D761 | F-6 |
| D780 | E-6 |
| D790 | B-8 |
| D791 | B-8 |
| IC701 | A-7 |
| Q720 | D-11 |
| Q721 | D-11 |
| Q722 | C-10 |
| Q730 | E-6 |
| Q762 | F-6 |
| Q765 | F-5 |
| Q780 | E-6 |

## 6-25. SCHEMATIC DIAGRAM – SURROUND Section (HCD-ZX99i) – • See page 63 for IC Block Diagrams.

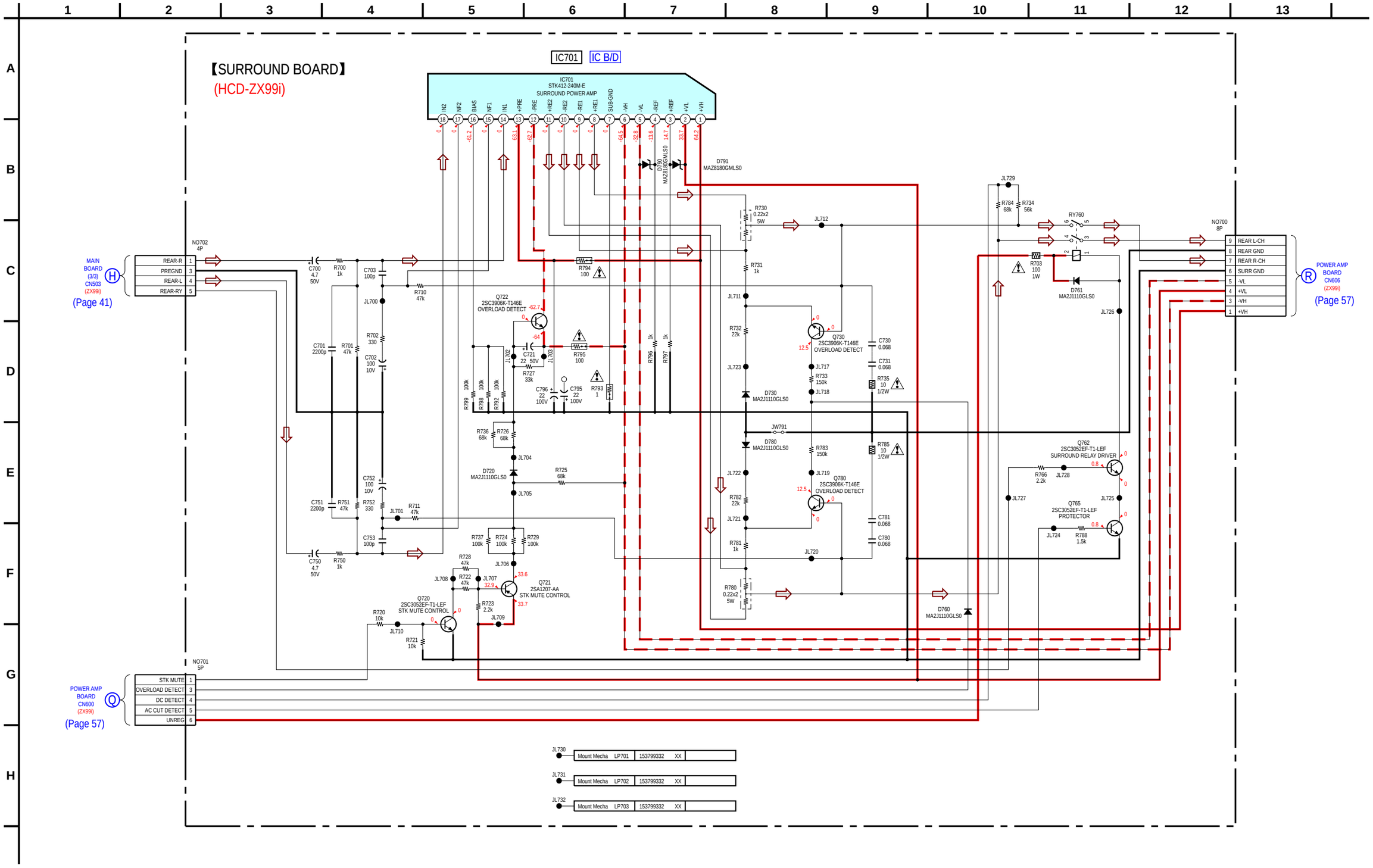

## 6-26. PRINTED WIRING BOARD – POWER AMP Section –

• See page 29 for Circuit Boards Location. • : Uses unleaded solder.

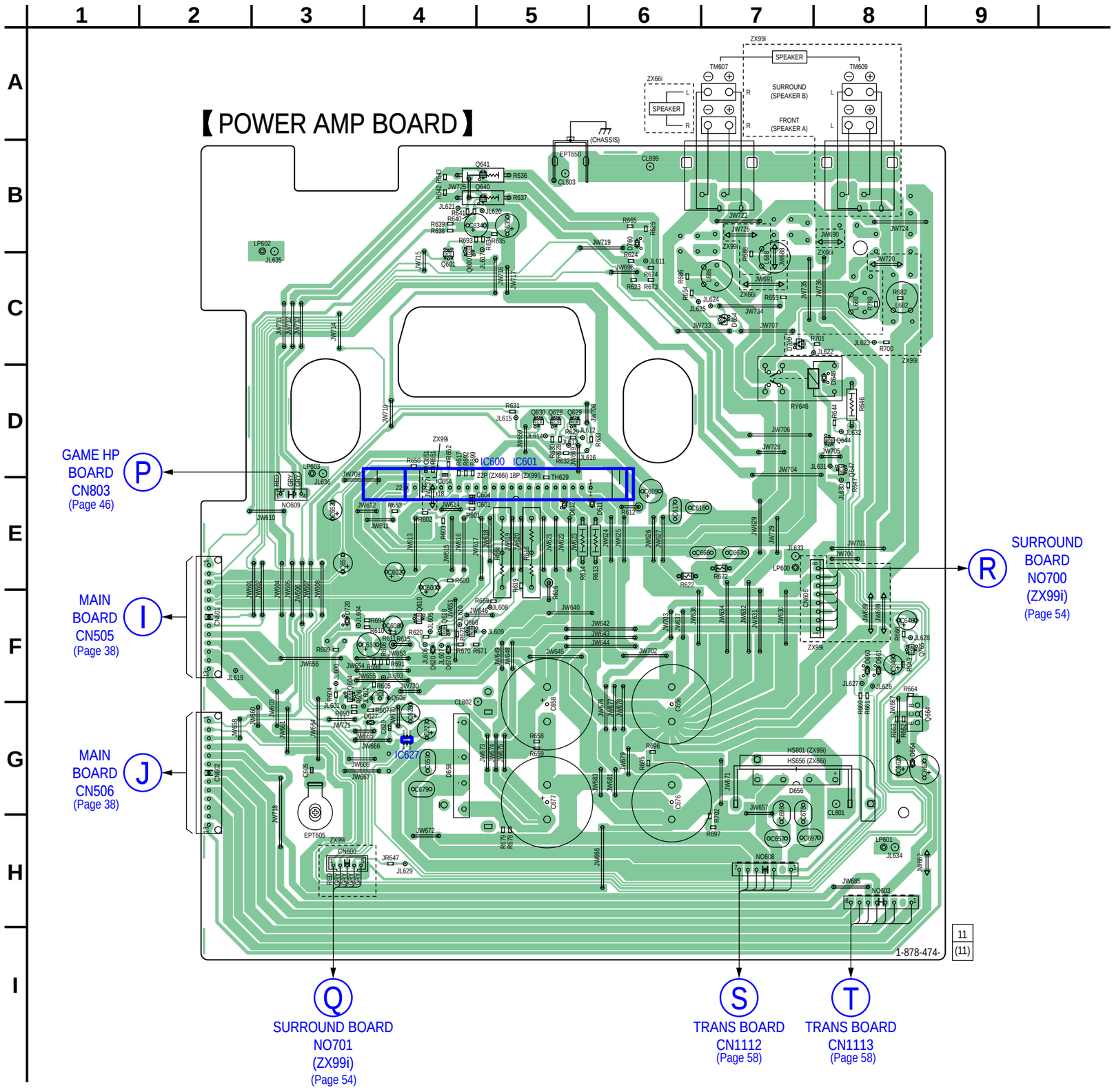


• **Semiconductor Location**

| Ref. No. | Location |
|---|---|
| D611 | E-6 |
| D612 | E-5 |
| D620 | F-4 |
| D627 | G-4 |
| D646 | D-8 |
| D654 | C-7 |
| D656 | G-7 |
| D658 | G-4 |
| D660 | F-8 |
| D661 | F-8 |
| D664 | G-8 |
| D670 | F-4 |
| (D700) | C-7 |
| D720 | F-3 |
| D760 | B-6 |
| <IC600> | D-5 |
| (IC601) | D-5 |
| IC627 | G-4 |
| Q600 | B-4 |
| Q601 | C-4 |
| Q604 | F-3 |
| Q606 | F-4 |
| Q610 | F-4 |
| Q618 | F-4 |
| Q628 | D-5 |
| Q629 | D-5 |
| Q630 | D-5 |
| Q640 | B-5 |
| Q641 | B-5 |
| Q644 | D-8 |
| Q647 | D-8 |
| Q664 | G-8 |
| Q668 | F-4 |
| Q765 | F-8 |

( ): HCD-ZX99i only
< >: HCD-ZX66i only

## 6-27. SCHEMATIC DIAGRAM – POWER AMP Section – • See page 63 for IC Block Diagrams.

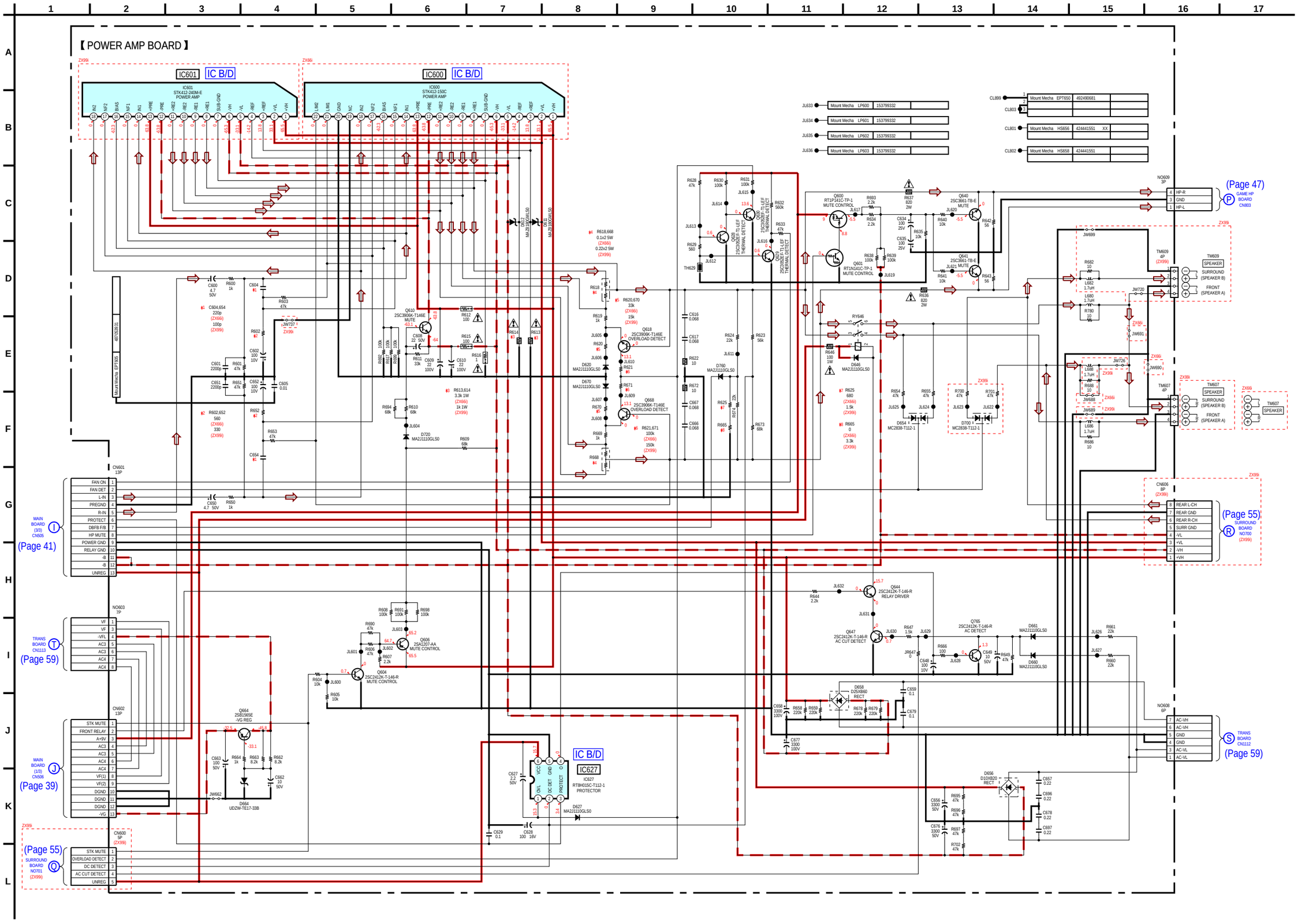

## 6-28. PRINTED WIRING BOARDS – TRANSFORMER Section –

• See page 29 for Circuit Boards Location. • : Uses unleaded solder.

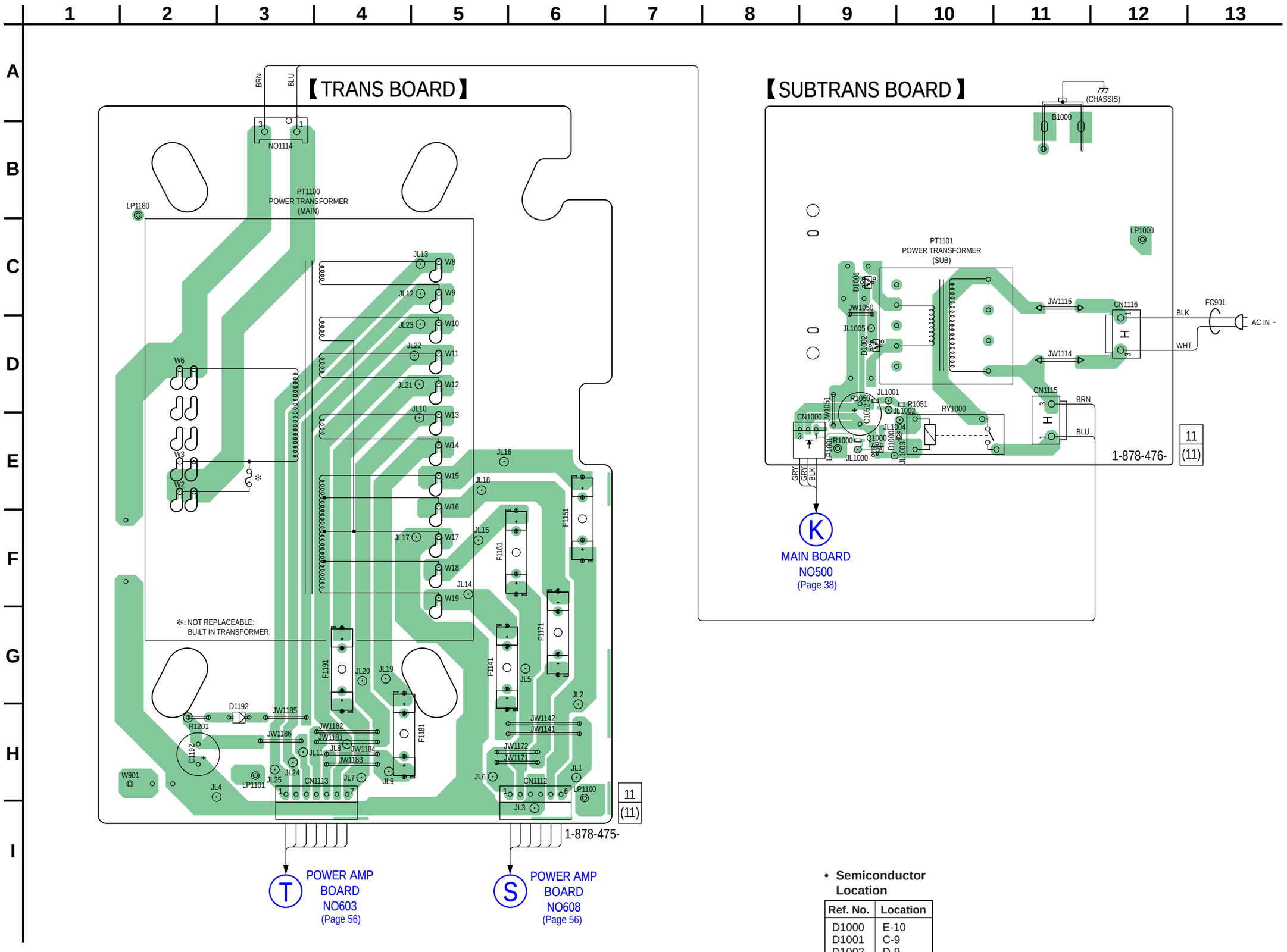


• **Semiconductor Location**

| Ref. No. | Location |
|---|---|
| D1000 | E-10 |
| D1001 | C-9 |
| D1002 | D-9 |
| D1192 | H-3 |
| Q1000 | E-9 |

## 6-29. SCHEMATIC DIAGRAM – TRANSFORMER Section –

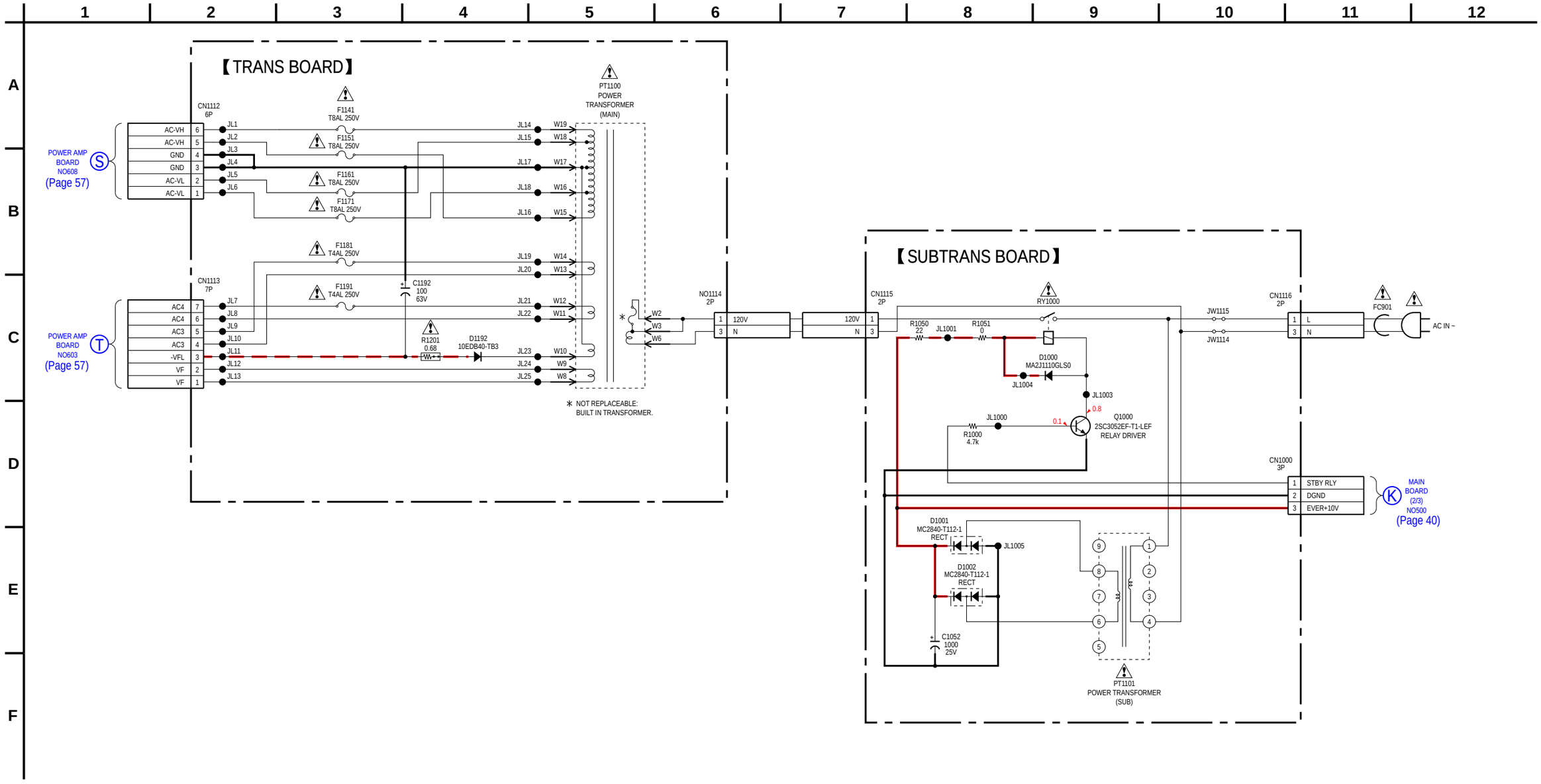

- **IC Block Diagrams**

### IC251 BA5947FM-E2 (BD81A Board)

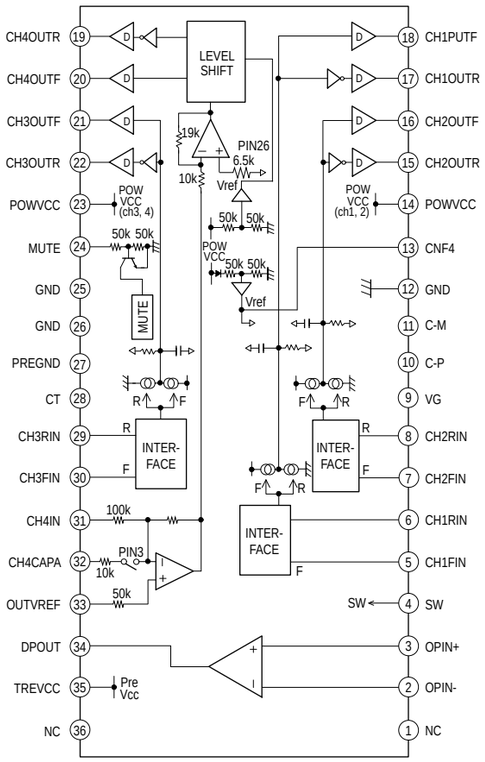


### IC301 TC94A34FG-002 (BD81A Board)

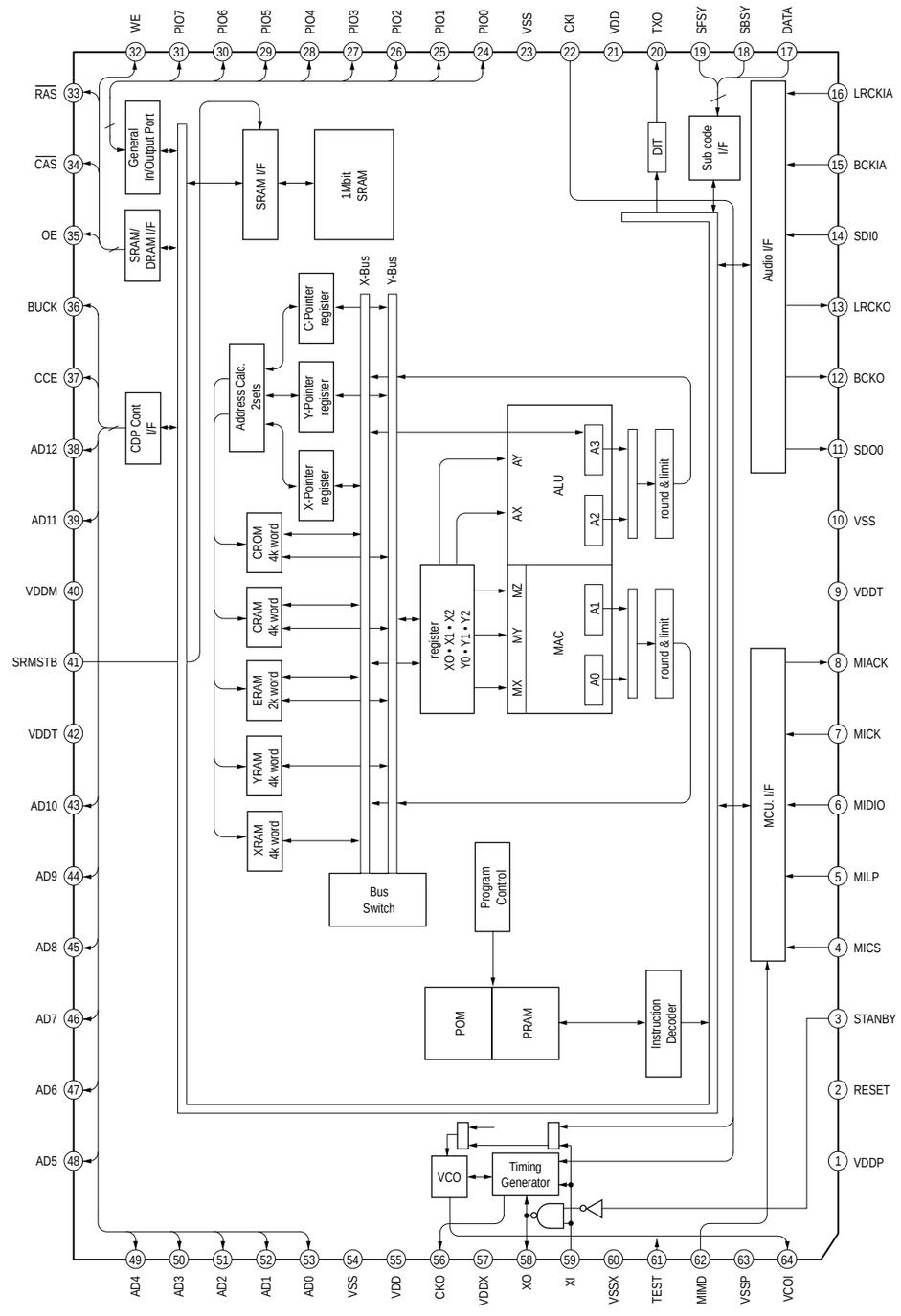


### IC501 BA00BC0WCP-V5E2 (MAIN Board (1/3))

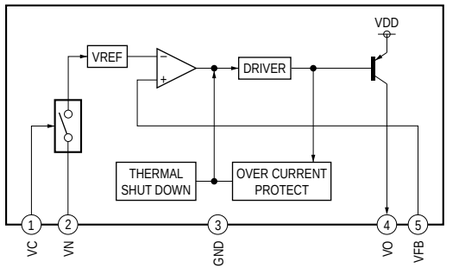


### IC514 BA6956AN (MAIN Board (1/3))
### IC515 BA6956AN (MAIN Board (1/3))

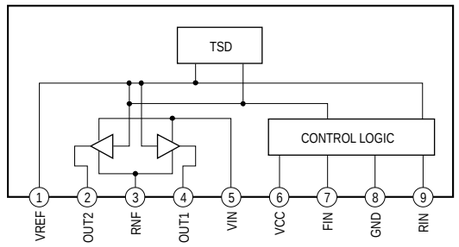

## IC101 R2A15216FP (MAIN Board (3/3))

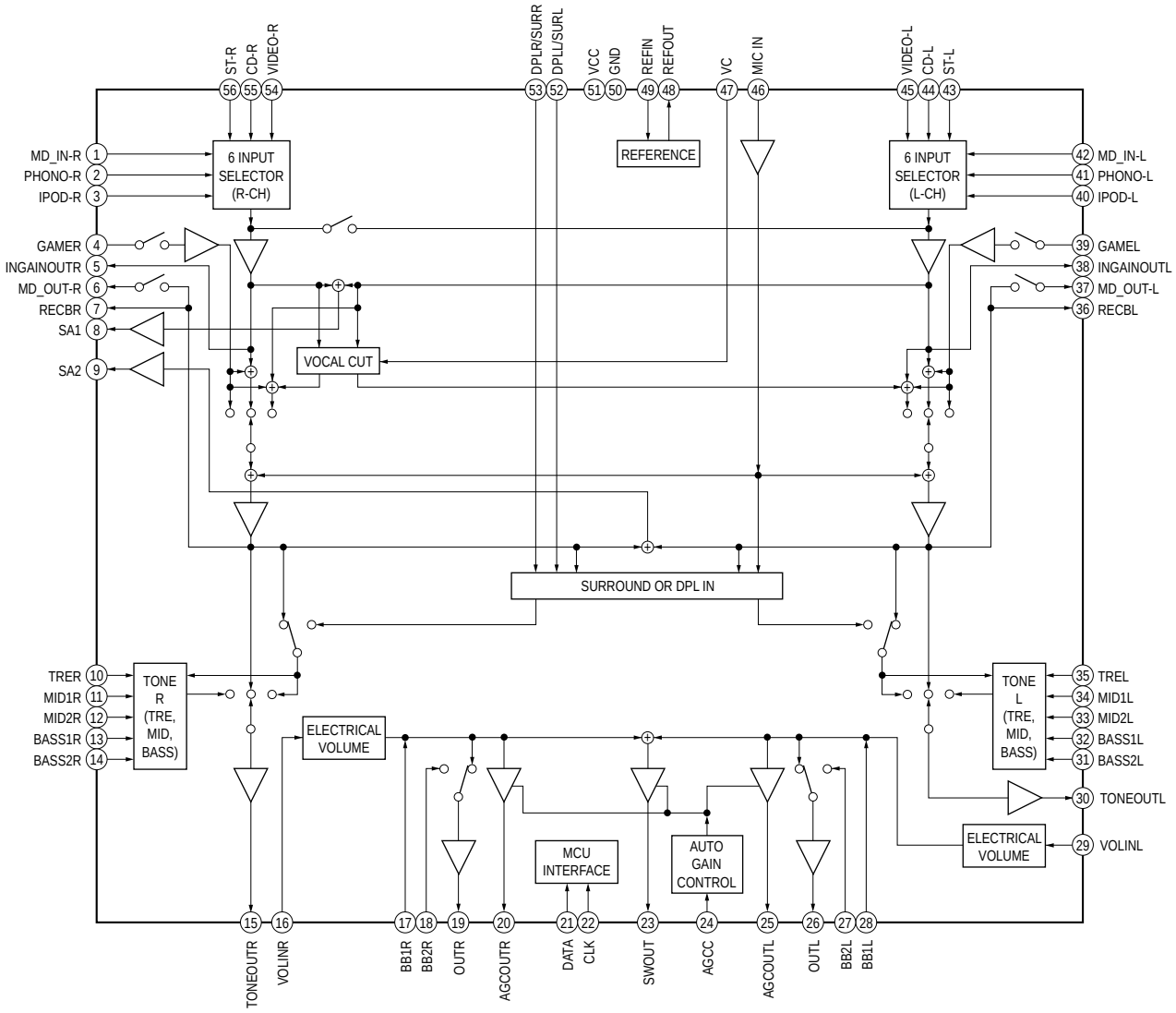

## IC102 R2S15207FP (MAIN Board (3/3))

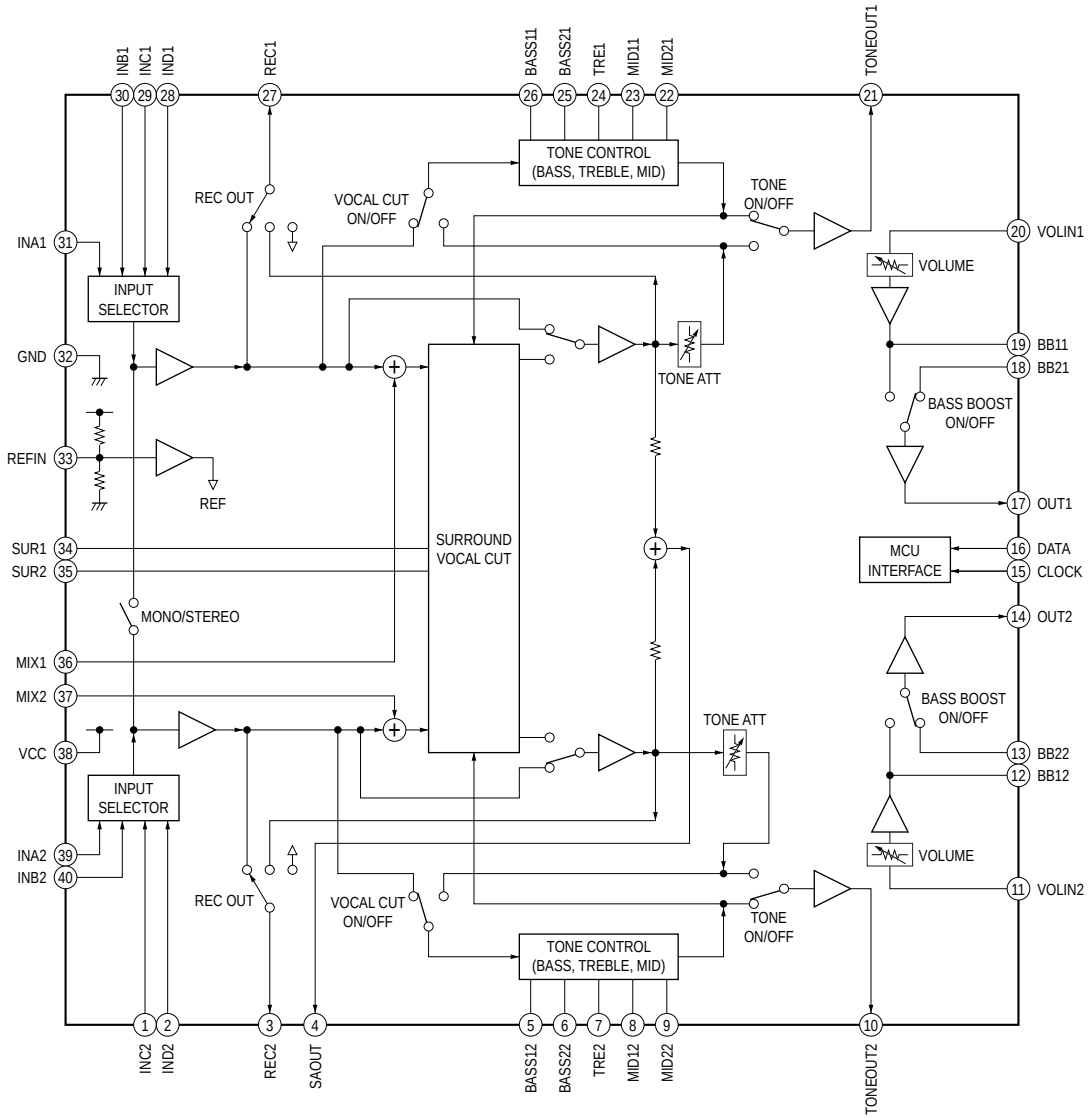


## IC903 NJM2760V-TE2 (PANEL COM Board)

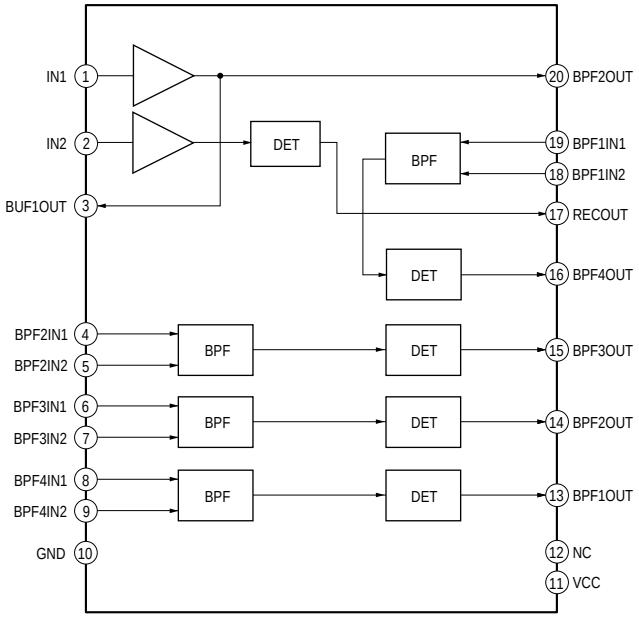

**IC701 STK412-240M-E (SURROUND Board) (HCD-ZX99i only)**
**IC601 STK412-240M-E (POWER AMP Board) (HCD-ZX99i only)**

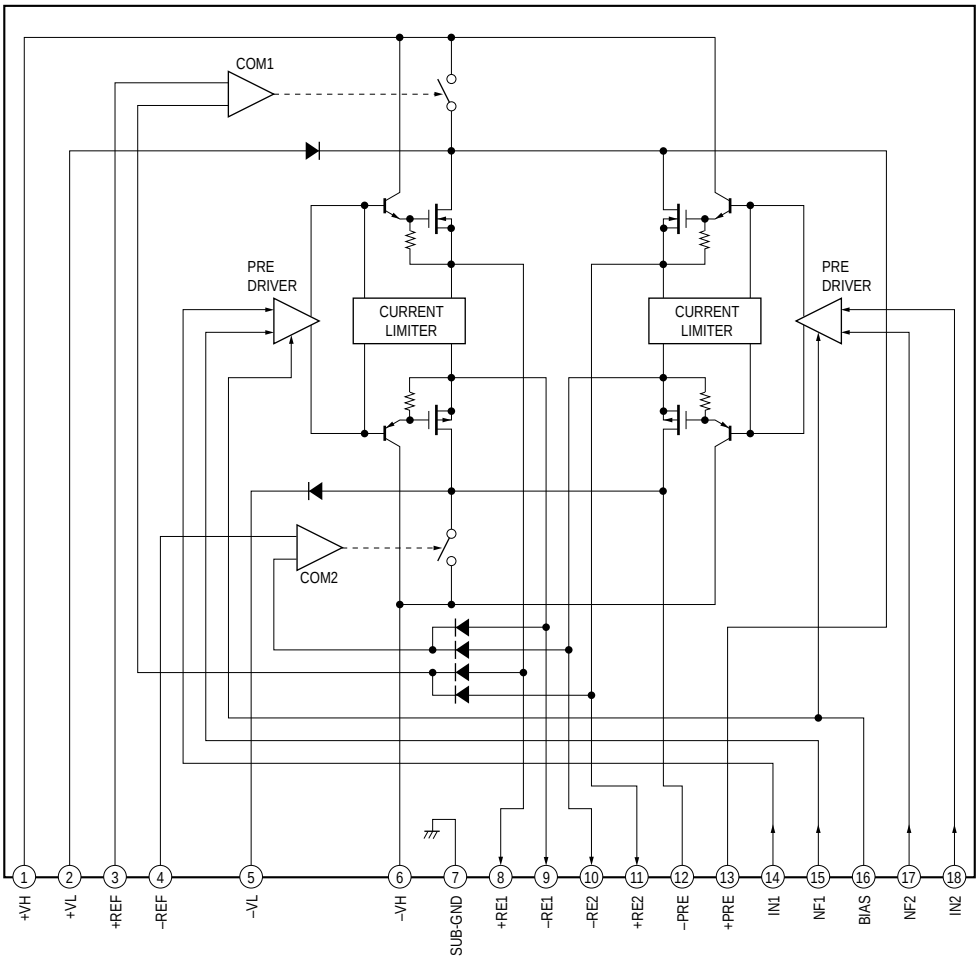

## IC600 STK412-150C (POWER AMP Board) (HCD-ZX66i only)

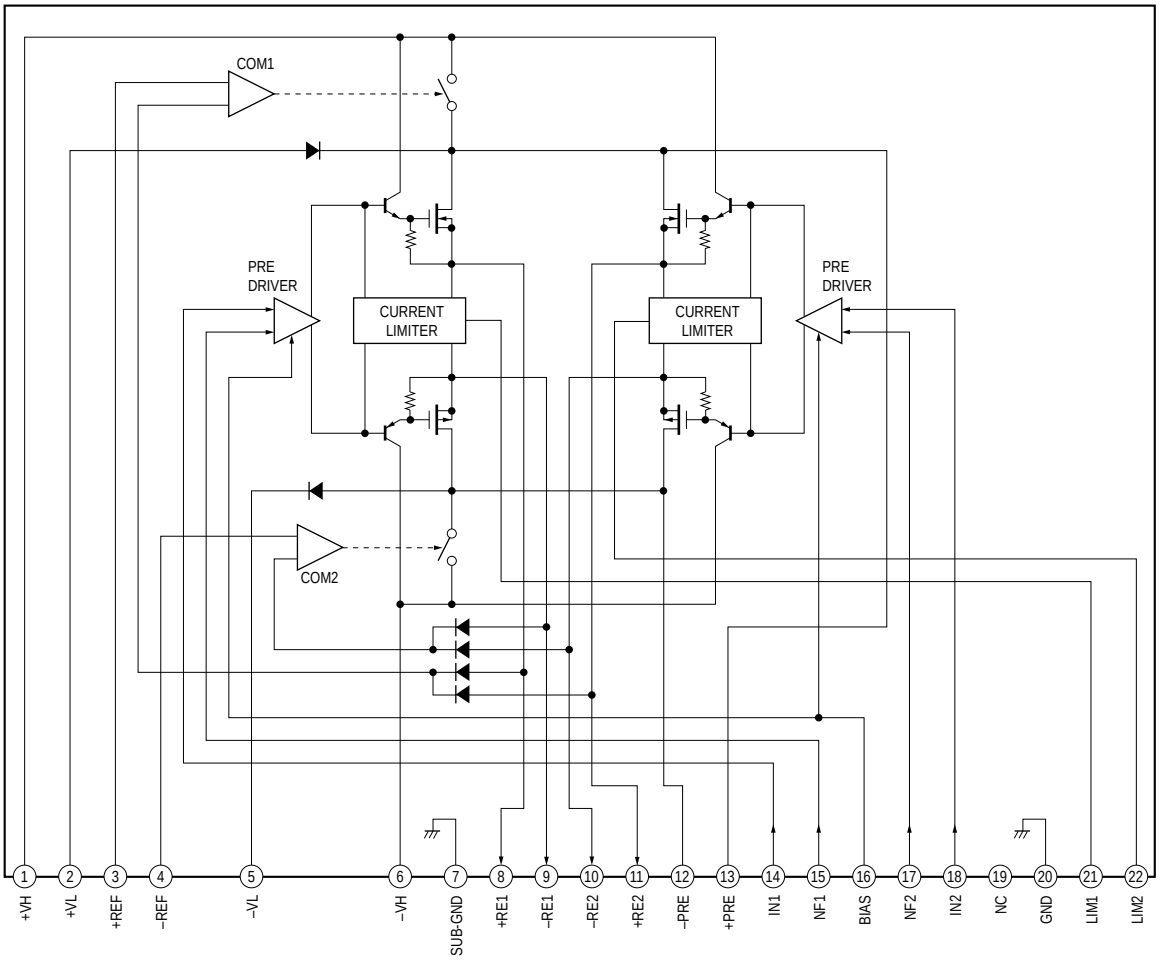


## IC627 RT8H015C-T112-1 (POWER AMP Board)

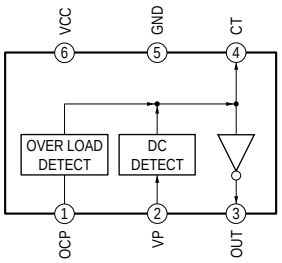

• **IC Pin Function Descriptions**

**BD81A BOARD IC101 CXD3059AR (RF AMP, DIGITAL SIGNAL PROCESSOR)**

| Pin No. | Pin Name | I/O | Description |
|---|---|---|---|
| 1 | MIRR | I/O | Mirror signal input/output (Not used in this set) |
| 2 | DFCT | I/O | Defect signal input/output (Not used in this set) |
| 3 | FOK | I/O | Focus OK signal input/output (Not used in this set) |
| 4 | VSS | — | Ground |
| 5 | LOCK | I/O | Lock signal input/output (Not used in this set) |
| 6 | MDP | O | Spindle motor servo control signal output |
| 7 | SSTP | I | Disc most inner detection signal input |
| 8 | IOVSS1 | — | Digital ground |
| 9 | SFDR | O | Sled drive signal output (FWD direction) |
| 10 | SRDR | O | Sled drive signal output (REV direction) |
| 11 | TFDR | O | Tracking drive signal output (FWD direction) |
| 12 | TRDR | O | Tracking drive signal output (REV direction) |
| 13 | FFDR | O | Focus drive signal output (FWD direction) |
| 14 | FRDR | O | Focus drive signal output (REV direction) |
| 15 | IOVDD1 | — | Digital power supply pin (+3.3 V) |
| 16 | AVDD0 | — | Analog power supply pin (+3.3 V) |
| 17 | AVSS0 | — | Analog ground |
| 18 | NC | — | Not used. (Open) |
| 19 | E | I | E signal input |
| 20 | F | I | F signal input |
| 21 | TEI | I | Tracking error signal input |
| 22 | TEO | O | Tracking error signal output |
| 23 | FEI | I | Focus error signal input |
| 24 | FEO | O | Focus error signal output |
| 25 | VC | I/O | VC voltage output/Center voltage input |
| 26 | A | I | A signal input |
| 27 | B | I | B signal input |
| 28 | C | I | C signal input |
| 29 | D | I | D signal input |
| 30 | NC | — | Not used. (Open) |
| 31 | AVDD4 | — | Analog power supply pin (+3.3 V) |
| 32 | RFDCO | I/O | RFDC signal input/output (Not used in this set) |
| 33 | PDSENS | I | Reference voltage input (Fixed at L in this set) |
| 34 | AC_SUM | O | RFAC summing amplifier signal output |
| 35 | EQ_IN | I | Equalizer circuit signal input |
| 36 | LD | O | APC amplifier signal output |
| 37 | PD | I | APC amplifier signal input |
| 38 | NC | — | Not used. (Open) |
| 39 | RFC | I | EQ cut off frequency adjustment input |
| 40 | AVSS4 | — | Analog ground |
| 41 | RFACO | O | RFAC signal output |
| 42 | RFACI | I | RFAC signal input |
| 43 | AVDD3 | — | Analog power supply pin (+3.3 V) |
| 44 | BIAS | I | Asymmetry circuit constant current input |
| 45 | ASYI | I | Asymmetry comparate voltage input |
| 46 | ASYO | O | EFM full swing signal output |
| 47 | VPCO | O | Charge pump output (Not used in this set) |
| 48 | VCTL | I | VCO2 control voltage input |
| 49 | AVSS3 | — | Analog ground |
| 50 | CLTV | I | VCO1 control voltage input |
| 51 | FILO | O | Filter signal output |
| 52 | FILI | I | Filter signal input |
| 53 | PCO | O | Charge pump output |
| 54 | AVDD5 | — | Analog power supply pin (+3.3 V) |

| Pin No. | Pin Name | I/O | Description |
|---|---|---|---|
| 55 | DDVROUT | O | DC/DC converter output |
| 56 | DDVRSEN | I | DC/DC converter output voltage monitor signal input |
| 57 | AVSS5 | — | Analog ground |
| 58 | DDCR | I | Reset signal input |
| 59 | NC | — | Not used. (Open) |
| 60 | BCKI | I | D/A interface bit clock signal input |
| 61 | PCMDI | I | D/A interface serial data signal input |
| 62 | LRCKI | I | D/A interface LR clock signal input |
| 63 | LRCK | O | D/A interface LR clock signal output |
| 64 | VSS | — | Ground |
| 65 | PCMD | O | D/A interface serial data signal output |
| 66 | BCK | O | D/A interface bit clock signal output |
| 67 | VDD | — | Power supply pin (+3.3 V) |
| 68 | EMPH | O | Not used. (Connect to EMPHI) |
| 69 | EMPHI | I | Not used. (Connect to EMPH) |
| 70 | IOVDD2 | — | Digital power supply pin (+3.3 V) |
| 71 | DOUT | — | Digital out signal output |
| 72, 73 | TEST | I | Test pin (Normally, fixed at L) |
| 74 | IOVSS2 | — | Digital ground |
| 75 | NC | — | Not used. (Open) |
| 76 | XVSS | — | Ground |
| 77 | XTAO | O | Master clock signal output (16.9344 MHz) |
| 78 | XTAI | I | Master clock signal input (16.9344 MHz) |
| 79 | XVDD | — | Power supply pin (+3.3 V) |
| 80 | AVDD1 | — | Analog power supply pin (+3.3 V) |
| 81 | AOUT1 | O | L channel analog signal output |
| 82 | VREFL | O | L channel reference voltage output |
| 83, 84 | AVSS1,AVSS2 | — | Analog ground |
| 85 | VREFR | O | R channel reference voltage output |
| 86 | AOUT2 | O | R channel analog signal output |
| 87 | AVDD2 | — | Analog power supply pin (+3.3 V) |
| 88 | NC | — | Not used. (Open) |
| 89 | IOVDD0 | — | Digital power supply pin (+3.3 V) |
| 90 | RMUT | O | R channel “0” detection flug output (Not used in this set) |
| 91 | LMUT | O | L channel “0” detection flug output (Not used in this set) |
| 92 | NC | — | Not used. (Open) |
| 93 | XTSL | I | Sub clock signal input (Fixed at L in this set) |
| 94 | IOVSS0 | — | Digital ground |
| 95 | XTACN | I | Oscillation circuit control signal input |
| 96 | SQSO | O | Sub 80 bit, PCM peak and level data signal output (Not used in this set) |
| 97 | SQCK | I | Clock signal input |
| 98 | SBSO | O | Sub P-W serial data signal output (Not used in this set) |
| 99 | EXCK | I | Clock signal input (Not used in this set) |
| 100 | XRST | I | System reset signal input |
| 101 | SYSM | I | Mute signal input (Fixed at L in this set) |
| 102 | DATA | I | Serial data signal input |
| 103 | VSS | — | Ground |
| 104 | XLAT | I | Latch signal input |
| 105 | CLOK | I | Serial data transfer clock signal input |
| 106 | VDD | — | Power supply pin (+3.3 V) |
| 107 | SENS | O | SENS signal output |
| 108 | SCLK | I | Clock signal input (Fixed at H in this set) |
| 109 | ATSK | I/O | Input/output for anti-shock (Not used in this set) |
| 110 | WFCK | O | WFCK signal output (Not used in this set) |
| 111 | XUGF | O | XUGF signal output (Not used in this set) |
| 112 | XPCK | O | XPCK signal output (Not used in this set) |

| Pin No. | Pin Name | I/O | Description |
|---|---|---|---|
| 113 | GFS | O | GFS signal output (Not used in this set) |
| 114 | C2PO | O | C2PO signal output (Not used in this set) |
| 115 | SCOR | O | Sub code sync signal output |
| 116 | VDD | — | Power supply pin (+3.3 V) |
| 117 | C4M | O | 4.2366 MHz signal output (Not used in this set) |
| 118 | WDCK | O | Word clock signal output (Not used in this set) |
| 119 | COUT | I/O | Track count signal input/output (Not used in this set) |
| 120 | NC | — | Not used. (Open) |

**MAIN BOARD (2/3) IC401 R5F3640MDFAR (SYSTEM CONTROL)**

| Pin No. | Pin Name | I/O | Description |
|---|---|---|---|
| 1 | MP3-ACK | I | Acknowledgement input signal from MP3 decoder IC (L: acknowledged) |
| 2 | MP3-LP | O | Latch output signal to MP3 decoder IC (L: enable) |
| 3 | MP3-CS | O | Chip select output signal to MP3 decoder IC (L: enable) |
| 4 | SIRCS | I | Remote control signal input |
| 5 | MP3-DATA-OUT | O | Serial data output signal to MP3 decoder IC |
| 6 | MP3-DATA-IN | I | Serial data input signal from MP3 decoder IC |
| 7 | MP3-CLK | O | Serial data transfer clock signal to MP3 decoder IC |
| 8 | BYTE | — | Ground |
| 9 | CNVSS | — | Ground |
| 10 | XC-IN | I | Sub system clock input terminal (32.768 kHz) |
| 11 | XC-OUT | O | Sub system clock output terminal (32.768 kHz) |
| 12 | RESET | I | System reset signal input from the reset signal IC (L: reset). After the power supply rises,L is input for several hundreds msec and then change to H. |
| 13 | X-OUT | O | Main system clock output terminal (16 MHz) |
| 14 | VSS | — | Ground |
| 15 | X-IN | I | Main system clock input terminal (16 MHz) |
| 16 | VCC | — | Power supply terminal (+3.3 V) |
| 17 | NMI | I | Non-maskable interrupt input terminal |
| 18 | MP3-RST | O | Reset signal output to MP3 decoder IC |
| 19 | SCOR | I | Subcode sync (S0+S1) detection signal input from the digital signal processor |
| 20 | AC-CUT | I | AC off detection signal input from the reset signal IC (L: AC cut detected) |
| 21 | SENS | I | Internal status detection monitor input from the digital signal processor |
| 22 | CD-CLK | O | Serial data transfer clock signal output to the digital signal processor |
| 23 | XLAT | O | Serial data latch pulse output to the digital signal processor |
| 24 | CD-DATA | O | Serial data output to the digital signal processor |
| 25 | XRST | O | Reset signal output to the digital signal processor and the motor/coil driver (L: reset) |
| 26 | XCTN | O | BD DSP Oscillation on/off control signal output (H: on) |
| 27 | NO USE | I | Not Used. (Open) |
| 28 | STBY-RELAY | O | Main power on/off control signal output (H: power on) |
| 29 | IIC-CLK | I/O | Clock signal for IIC communcation between master control controller and display Control controller |
| 30 | IIC-DATA | I/O | Data signal for IIC communcation between master control controller and display Control controller |
| 31 | MP3-STB | O | Standby mode signal output MP3 decoder IC (L: standby mode) |
| 32 | NO USE | I | Not Used. (Open) |
| 33 | FOR PROG | I | Not Used. (Open) |
| 34 | LINE MUTE | O | Line muting on/off control signal (H: muting on) |
| 35 | IPOD TXD | O | Serial data output to the iPod |
| 36 | IPOD RXD | I | Serial data receive from the iPod |
| 37 | IPOD POWER | O | iPod power control (L: OFF, H: ON) (Not used in this set) |
| 38 | IPOD MUTE | O | iPod muting control (L: MUTE) |
| 39 | NO USE | I | Not Used. (Open) |
| 40 | CD POWER | O | Power on/off control signal output to BU section (H: power on) |
| 41 | CD A-MUTE | O | CD analog signal muting on/off control signal output (H: power on) |
| 42 | TSENS | I | Disc tray position detection signal input from CDM |
| 43 | DSENS | I | Disc existence detection signal input from CDM |
| 44 | S2 | I | Disc tray status detection signal input from CDM |
| 45 | S1 | I | Disc tray status detection signal input from CDM |
| 46 | S0 | I | Disc tray status detection signal input from CDM |
| 47 | TRMP | O | CDM turning motor control signal output |
| 48 | TRMN | O | CDM turning motor control signal output |
| 49 | CKMN | O | CDM loading motor control signal output |
| 50 | CKMP | O | CDM loading motor control signal output |
| 51 to 59 | NO USE | I | Not Used. (Open) |
| 60 | EEPROM DATA | I/O | EEPROM data signal input/output |

| Pin No. | Pin Name | I/O | Description |
|---|---|---|---|
| 61 | EEPROM CLK | I/O | EEPROM clock signal input/output |
| 62 | VCC | — | Power supply terminal (+3.3 V) |
| 63 | NO USE | I | Not Used. (Open) |
| 64 | VSS | — | Ground terminal |
| 65 | AUDIO1 DATA | O | Serial data output to audio signal processor |
| 66 | AUDIO1 CLK | O | Serial data transfer clock signal output to audio signal processor |
| 67 | AUDIO2 DATA | O | Serial data output to 4-ch volume IC |
| 68 | AUDIO2 CLK | O | Serial data transfer clock signal output to 4-ch volume IC |
| 69 | SOFT TEST | O | Soft test signal output |
| 70 | NO USE | I | Not Used. (Open) |
| 71 | GC RESET | O | Reset signal output to Display Control IC (L: reset) |
| 72 | SURR RELAY | O | Relay drive signal output for the surround speakers (H: relay on) |
| 73 | DISPLAY KEY | I | Display key press detection signal (Interrupt input) |
| 74 | POWER KEY | I | Power key press detection signal (Interrupt input) |
| 75 | IPOD DETECT | I | iPod plug in detection (L: connected, H: disconnected) |
| 76 | STBY LED | O | LED drive signal output of POWER indicator (H: LED on) |
| 77 | HP DET | I | Headphone connection detection signal input (H: headphone connected) |
| 78 | FR RELAY | O | Relay drive signal output for the front speakers (H: relay on) |
| 79 | HP MUTE | O | Headphone muting on/off control signal (L: muting on) |
| 80 | STK MUTE | O | Power amplifier and sub woofer amplifier on/off control signal output (H: amplifier on) |
| 81 | PROTECT | I | Speaker protect detection signal input from speaker protect circuit (L: protector on) |
| 82 | ST CLK | O | PLL serial data transfer clock signal output to the tuner unit |
| 83 | ST DIN | I | PLL serial data input from the tuner unit |
| 84 | ST DOUT | O | PLL serial data output to the tuner unit |
| 85 | ST CE | O | PLL chip enable signal output to the tuner unit |
| 86 | TUNED | I | Tuning detection signal input from the tuner unit (L: tuned) |
| 87 to 91 | NO USE | I | Not Used. (Open) |
| 92 | MODEL-IN | I | Model setting terminal (L: HCD-ZX66i, H: HCD-ZX99i) |
| 93 | DEST-IN | I | Not Used. (Open) |
| 94 | I-HOLD | I | Not Used. (Open) |
| 95 | NO USE | I | Not Used. (Open) |
| 96 | AVSS | — | Ground terminal (for A/D conversion) |
| 97 | NO USE | I | Not Used. (Open) |
| 98 | VREF | I | A/D Converter reference voltage input terminal (+3.3 V) |
| 99 | AVCC | — | Power supply terminal (+3.3 V) (for A/D conversion) |
| 100 | MP3-REQ | I | Request signal from MP3 decoder IC |

**PANEL COM BOARD IC901 MB90M407PF-G-146E1 (VACUUM FLUORESCENT DISPLAY DRIVER, KEY CONTROL)**

| Pin No. | Pin Name | I/O | Description |
|---|---|---|---|
| 1 to 4 | G4 to G1 | O | Grid drive signal output for the vacuum fluorescent display |
| 5 to 10 | SEG-1 to SEG-6 | O | Segment drive signal output for the vacuum fluorescent display |
| 11 | VSS-IO | — | Ground (for I/O port) |
| 12 to 22 | SEG-7 to SEG-17 | O | Segment drive signal output for the vacuum fluorescent display |
| 23 | VDD-FIP | — | Power supply pin (+3.3 V) (for the vacuum fluorescent display) |
| 24 to 41 | SEG-18 to SEG-35 | O | Segment drive signal output for the vacuum fluorescent display |
| 42 | VSS-IO | — | Ground (for I/O port) |
| 43 | SEG-36 | O | Segment drive signal output for the vacuum fluorescent display |
| 44 | NC | O | Not used. (Open) |
| 45 | SPK MODE LED | O | Dynamic LED drive signal output of the X-ROUND indicator (H: LED on) |
| 46 | CD LED | O | Not used. (Open) |
| 47 | GAME LED | O | Not used. (Open) |
| 48 | VKK | — | Power supply pin (-33 V) (for the vacuum fluorescent display) |
| 49 | MD0 | I | Setting pin for the CPU operational mode |
| 50 | MD1/VDD-VFT | I | Setting pin for the CPU operational mode |
| 51 | MD2 | I | Setting pin for the CPU operational mode |
| 52 | VOL 1, 2 | O | Dynamic LED drive signal output of the ILLUMINATION 1, 2 indicators (H: LED on) |
| 53 | VOL 3, 4 | O | Dynamic LED drive signal output of the ILLUMINATION 3, 4 indicators (H: LED on) |
| 54 | VOL 5, 6 | O | Dynamic LED drive signal output of the ILLUMINATION 5, 6 indicators (H: LED on) |
| 55 | VOL 7, 8 | O | Dynamic LED drive signal output of the ILLUMINATION 7, 8 indicators (H: LED on) |
| 56 | VOL 9, 10 | O | Dynamic LED drive signal output of the ILLUMINATION 9, 10 indicators (H: LED on) |
| 57 | VOL 11 LED | O | Dynamic LED drive signal output of the ILLUMINATION 11 indicator (H: LED on) |
| 58 | NC | O | Not used. (Open) |
| 59 | LED SELECTOR | O | Dynamic LED drive select signal output |
| 60 | I2C DATA | I/O | Data input/output with I2C communication between the system control IC and display control IC |
| 61 | I2C CLOCK | I/O | Clock signal input/output with I2C communication between the system control IC and display control IC |
| 62 | AVCC | — | Power supply pin (+3.3 V) (for A/D conversion) |
| 63 | AVSS | — | Ground (for A/D conversion) |
| 64 to 69 | KEY0 to KEY5 | I | Key signal input (A/D input) |
| 70 | BPF1-F01 | I | Spectrum analyzer drive signal input from the spectrum analyzer band-pass filter IC (A/D input) |
| 71 | BPF1-F02 | I | Spectrum analyzer drive signal input from the spectrum analyzer band-pass filter IC (A/D input) |
| 72 | BPF1-F03 | I | Spectrum analyzer drive signal input from the spectrum analyzer band-pass filter IC (A/D input) |
| 73 | BPF1-F04 | I | Spectrum analyzer drive signal input from the spectrum analyzer band-pass filter IC (A/D input) |
| 74 | ALL BAND | I | Spectrum analyzer drive signal input from the spectrum analyzer band-pass filter IC (A/D input) |
| 75 | JOG A | I | JOG dial pulse signal input from X-ROUND JOG rotary encoder (A phase input) (HCD-ZX99i) |
| 76 | JOG B | I | JOG dial pulse signal input from X-ROUND JOG rotary encoder (B phase input) (HCD-ZX99i) |
| 77 | RESET | I | System reset signal input from the system control IC (L: reset) |
| 78 | SOFT TEST | O | Output for the software test point |
| 79 | VOL B | I | JOG dial pulse signal input from VOLUME rotary encoder (B phase input) |
| 80 | VOL A | I | JOG dial pulse signal input from VOLUME rotary encoder (A phase input) |
| 81 | VSS-CPU | — | Ground (for CPU) |
| 82 | X OUT | O | System clock signal output (4 MHz) |
| 83 | X IN | I | System clock signal input (4 MHz) |
| 84 | VCC-CPU | — | Power supply pin (+3.3 V) (for CPU) |
| 85 | NO USE | O | Not used. (Open) |
| 86 to 100 | G19 to G5 | O | Grid drive signal output for the vacuum fluorescent display |

# SECTION 7
# EXPLODED VIEWS

**Note:**
- The mechanical parts with no reference number in the exploded views are not supplied.
- Items marked "*" are not stocked since they are seldom required for routine service. Some delay should be anticipated when ordering these items.
- -XX and -X mean standardized parts, so they may have some difference from the original one.

The components identified by mark ⚠ or dotted line with mark ⚠ are critical for safety.
Replace only with part number specified.

Les composants identifiés par une marque ⚠ sont critiques pour la sécurité.
Ne les remplacer que par une pièce portant le numéro spécifié.

## 7-1. BACK PANEL SECTION

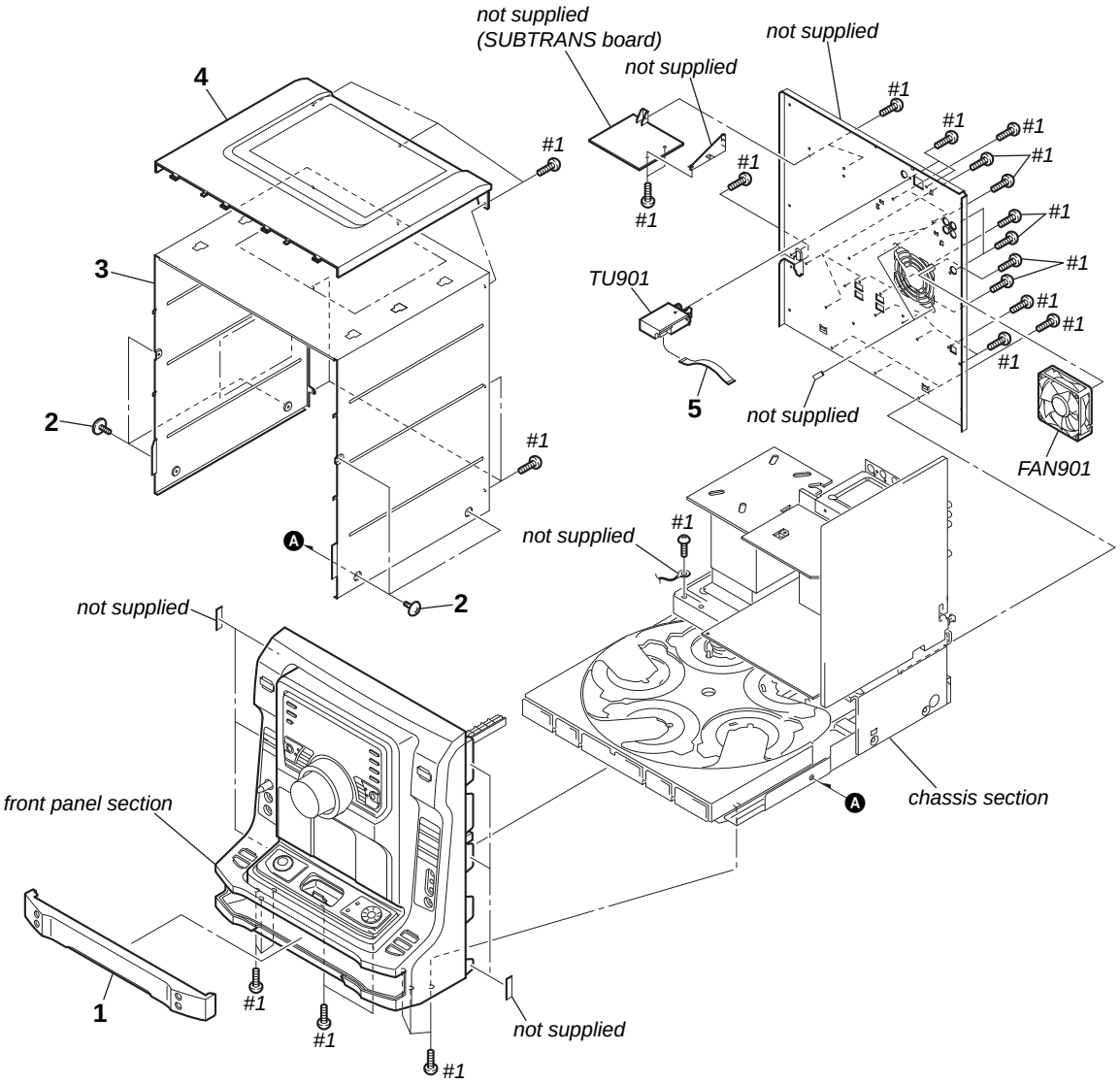


**Note:** If the wire (flat type) was replaced, fold it some as the wire (flat type) before replacement.

| Ref. No. | Part No. | Description | Remark |
|---|---|---|---|
| 1 | 4-252-686-31 | PANEL, LOADING (ZX99i) | |
| 1 | 4-252-686-41 | PANEL, LOADING (ZX66i) | |
| 2 | 3-363-099-02 | SCREW (CASE 3 TP2) | |
| 3 | 4-237-661-51 | CASE | |
| 4 | 4-252-685-01 | COVER (TOP) | |

| Ref. No. | Part No. | Description | Remark |
|---|---|---|---|
| 5 | 1-828-964-11 | WIRE (FLAT TYPE) (11 CORE) | |
| FAN901 | 1-763-372-11 | FAN, DC | |
| TU901 | 1-693-762-21 | TUNER (FM/AM) (ANTENNA) | |
| #1 | 7-685-646-79 | SCREW +BVTP 3X8 TYPE2 IT-3 | |

## 7-2. FRONT PANEL SECTION (1)

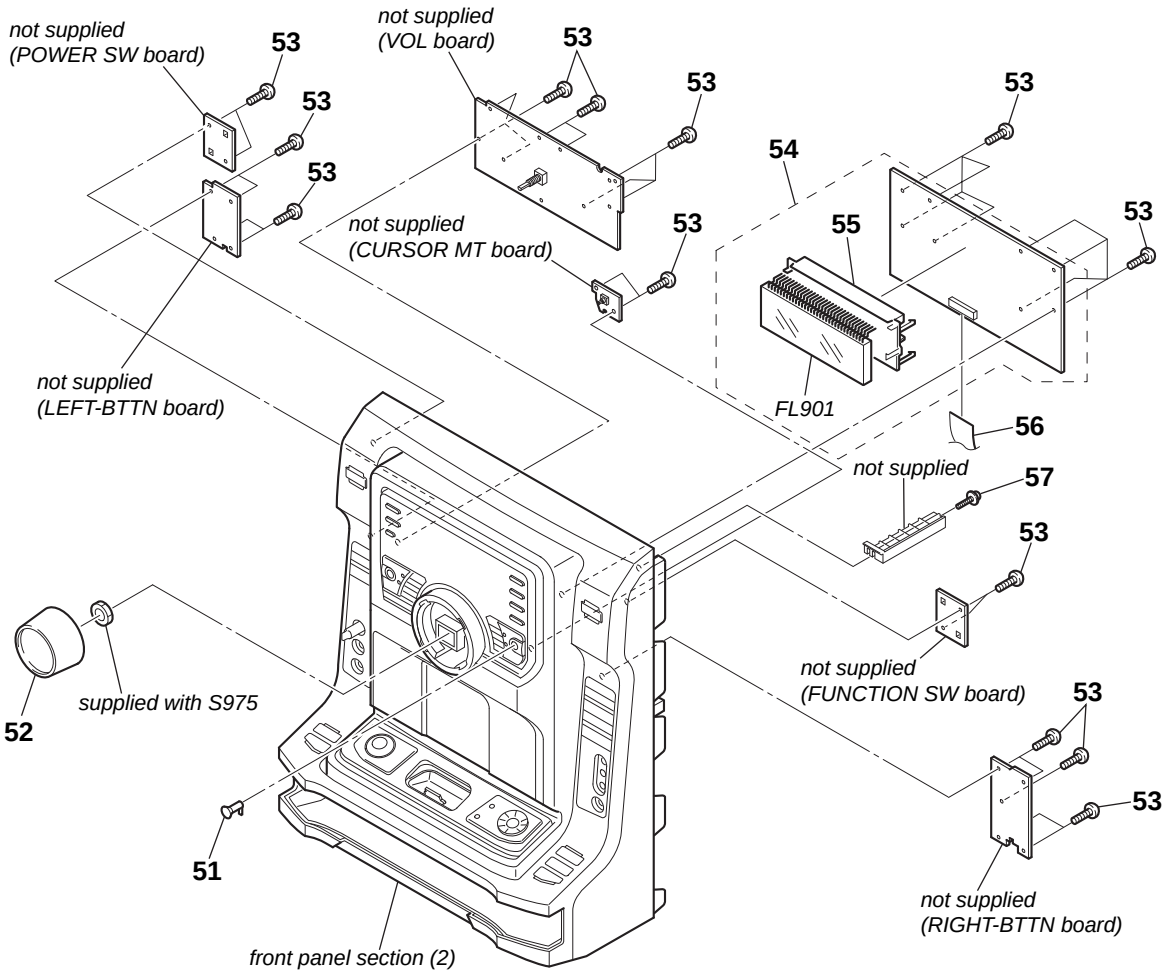


**Note:** If the wire (flat type) was replaced, fold it some as the wire (flat type) before replacement.

| Ref. No. | Part No. | Description | Remark |
|---|---|---|---|
| 51 | 4-252-682-01 | KNOB (ENTER) | |
| 52 | 4-252-684-01 | KNOB (VOLUME) | |
| 53 | 3-087-053-01 | +BVTP 2.6 (3CR) | |
| 54 | A-1616-806-A | PANEL COM BOARD, COMPLETE | |
| 55 | 4-253-178-01 | HOLDER, FL | |
| 56 | 1-828-996-51 | WIRE (FLAT TYPE) (17 CORE) | |
| 57 | 4-933-134-51 | SCREW (+PTPWH 2.6X8) | |
| FL901 | 1-483-081-11 | VACUUM FLUORESCENT DISPLAY | |

## 7-3. FRONT PANEL SECTION (2)

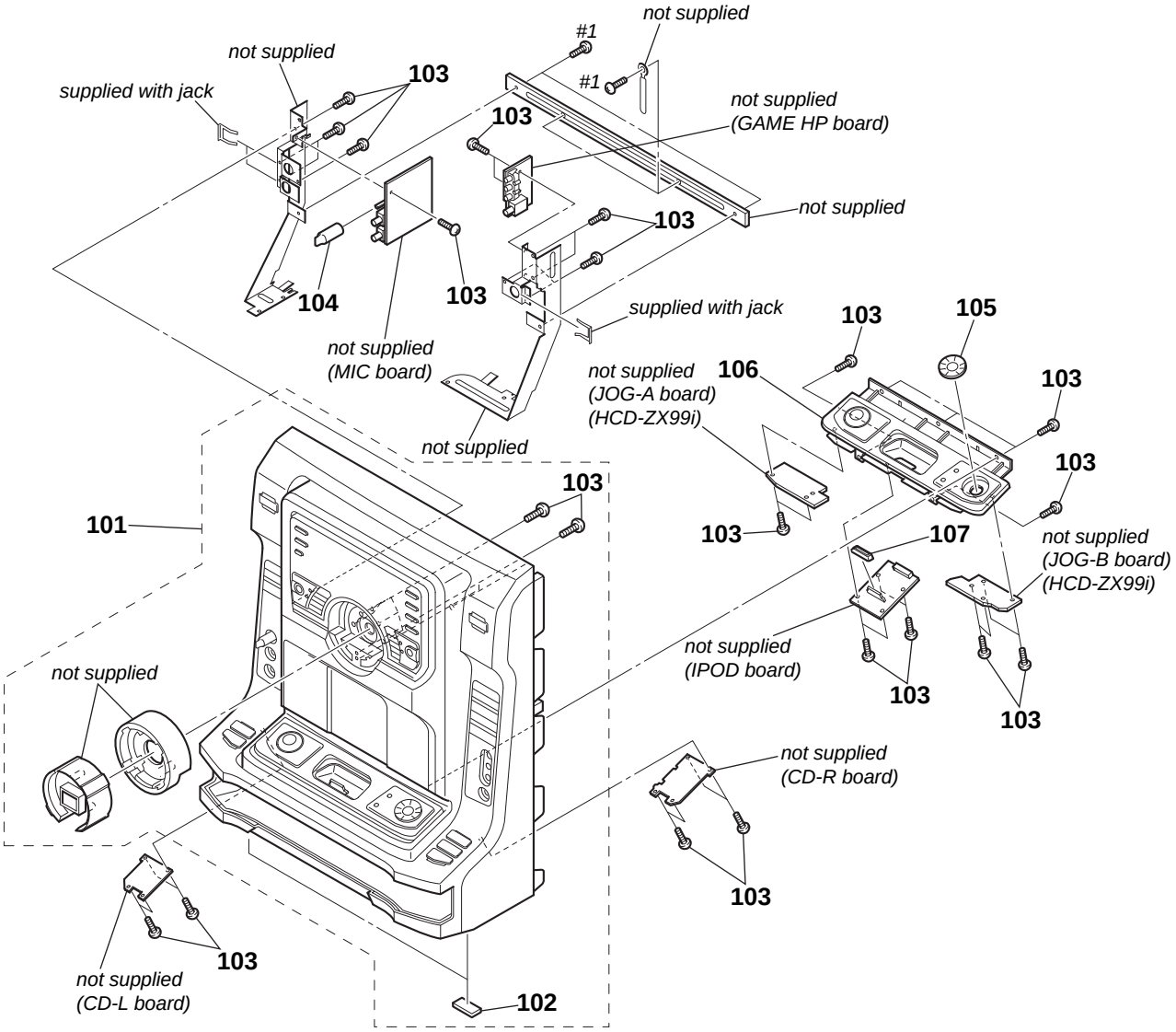


| Ref. No. | Part No. | Description | Remark |
|---|---|---|---|
| 101 | X-2342-757-1 | FRONT PANEL ASSY (ZX99I) (ZX99i) | |
| 101 | X-2345-118-1 | FRONT PANEL ASSY (ZX66I) (ZX66i) | |
| 102 | 4-225-252-21 | CUSHION (FOOT) | |
| 103 | 3-087-053-01 | +BVTP 2.6 (3CR) | |
| 104 | 4-237-635-11 | KNOB (MIC) | |
| 105 | 4-252-683-01 | KNOB (JOG) (ZX99i) | |
| 106 | X-2342-758-1 | BRACKET CD ASSY (ZX99I) (ZX99i) | |
| 106 | X-2342-774-1 | BRACKET CD ASSY (ZX66I) (ZX66i) | |
| 107 | 3-277-576-01 | ESCUTCHEON | |
| #1 | 7-685-646-79 | SCREW +BVTP 3X8 TYPE2 IT-3 | |

## 7-4. CHASSIS SECTION

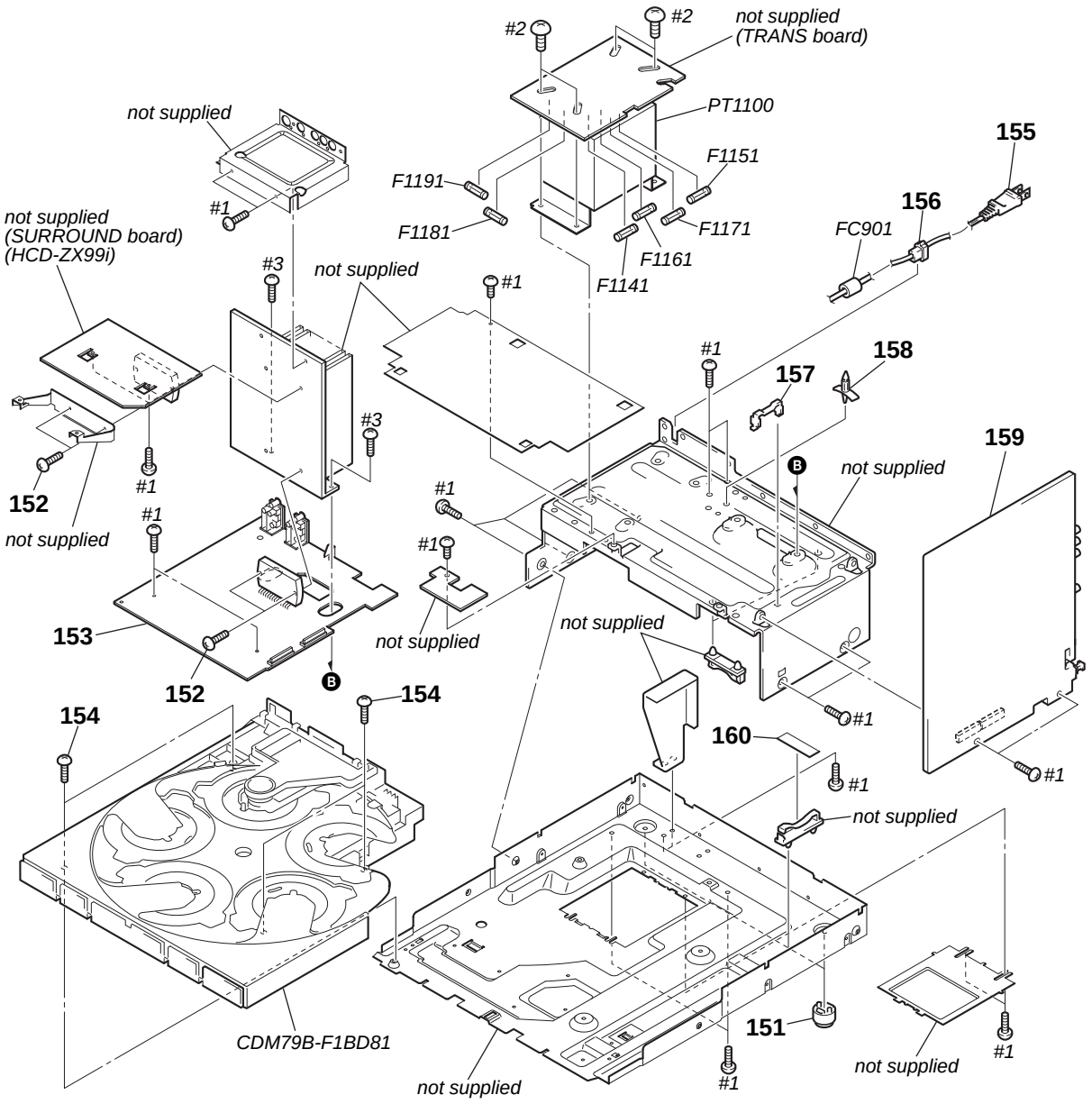


| Ref. No. | Part No. | Description | Remark |
|---|---|---|---|
| 151 | 4-965-822-01 | FOOT | |
| 152 | 3-905-609-41 | SCREW (TRANSISTOR) | |
| 153 | A-1616-816-A | POWER AMP BOARD, COMPLETE (ZX99i) | |
| 153 | A-1616-833-A | POWER AMP BOARD, COMPLETE (ZX66i) | |
| 154 | 3-077-331-01 | +BV3 (3-CR) | |
| ⚠ 155 | 1-783-820-11 | CORD, POWER | |
| 156 | 3-703-244-00 | BUSHING (2104), CORD | |
| * 157 | 4-988-533-01 | HOLDER, PWB | |
| * 158 | 4-954-051-41 | HOLDER, PC BOARD | |
| 159 | A-1616-802-A | MAIN BOARD, COMPLETE (ZX99i) | |
| 159 | A-1616-827-A | MAIN BOARD, COMPLETE (ZX66i) | |
| * 160 | 3-378-433-01 | CUSHION, SARANET | |

| Ref. No. | Part No. | Description | Remark |
|---|---|---|---|
| ⚠ F1141 | 1-533-949-33 | FUSE, CYLINDRICAL (TIME LAG) (T8AL/250V) | |
| ⚠ F1151 | 1-533-949-33 | FUSE, CYLINDRICAL (TIME LAG) (T8AL/250V) | |
| ⚠ F1161 | 1-533-949-33 | FUSE, CYLINDRICAL (TIME LAG) (T8AL/250V) | |
| ⚠ F1171 | 1-533-949-33 | FUSE, CYLINDRICAL (TIME LAG) (T8AL/250V) | |
| ⚠ F1181 | 1-532-504-33 | FUSE (T4AL/250V) | |
| ⚠ F1191 | 1-532-504-33 | FUSE (T4AL/250V) | |
| ⚠ FC901 | 1-500-497-11 | FILTER, CLAMP (FERRITE CORE) | |
| ⚠ PT1100 | 1-445-589-11 | TRANSFORMER, POWER (MAIN) (ZX66i) | |
| ⚠ PT1100 | 1-445-590-11 | TRANSFORMER, POWER (MAIN) (ZX99i) | |
| #1 | 7-685-646-79 | SCREW +BVTP 3X8 TYPE2 IT-3 | |
| #2 | 7-685-881-09 | SCREW +BVTT 4X8 (S) | |
| #3 | 7-685-647-79 | SCREW +BVTP 3X10 TYPE2 IT-3 | |

## 7-5. CD MECHANISM SECTION (1) (CDM79B-F1BD81)

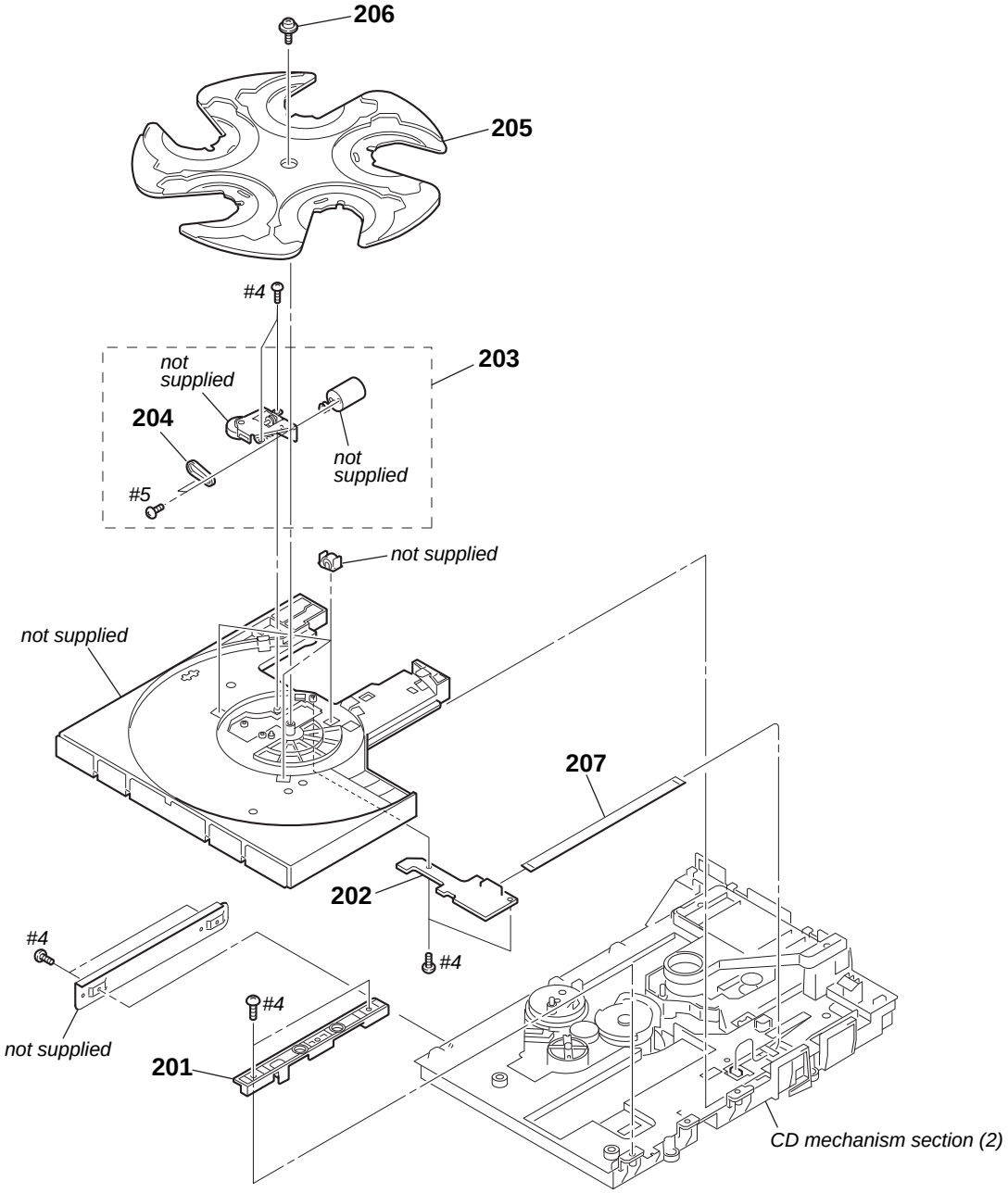


**Note:** If the wire (flat type) was replaced, fold it some as the wire (flat type) before replacement.

| Ref. No. | Part No. | Description | Remark |
|---|---|---|---|
| 201 | 3-074-737-01 | PLATE (GUIDE) | |
| 202 | A-6060-642-A | SE-130 BOARD, COMPLETE | |
| 203 | A-6060-640-A | UNIT ASSY, TD | |
| 204 | 3-074-725-01 | BELT, TD | |
| 205 | 3-074-717-21 | TRAY | |
| 206 | 4-218-252-52 | SCREW (+PTPWH M2.6), FLOATING | |
| 207 | 1-823-921-11 | FMS-18 | |
| #4 | 7-685-534-19 | SCREW +BTP 2.6X8 TYPE2 N-S | |
| #5 | 7-682-544-04 | SCREW +P 3X3 | |

## 7-6. CD MECHANISM SECTION (2) (CDM79B-F1BD81)

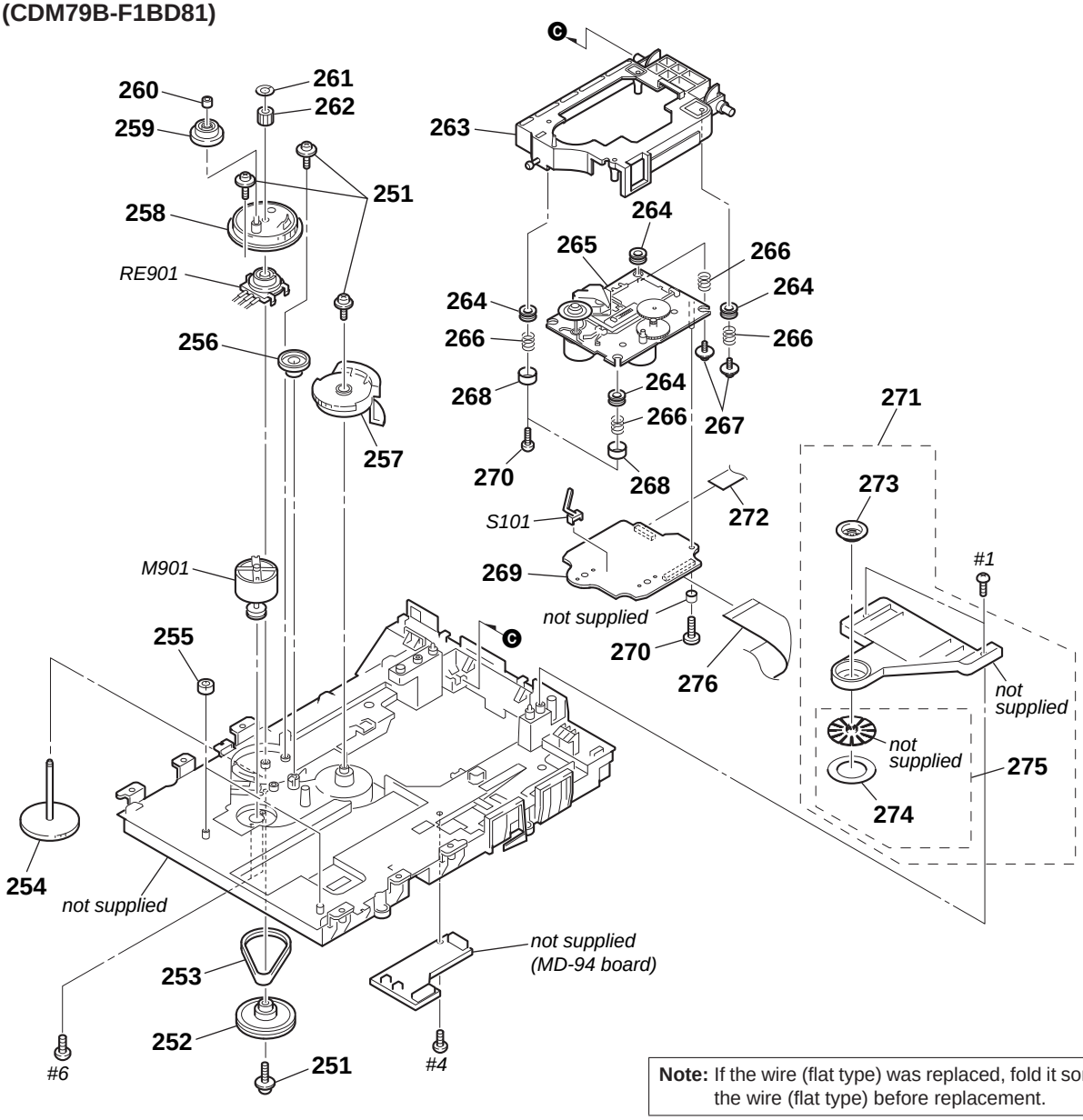


**Note:** If the wire (flat type) was replaced, fold it some as the wire (flat type) before replacement.

| Ref. No. | Part No. | Description | Remark |
|---|---|---|---|
| 251 | 4-218-252-52 | SCREW (+PTPWH M2.6), FLOATING | |
| 252 | 3-074-744-01 | GEAR (LOADING A) | |
| 253 | 3-074-745-01 | BELT (LOADING) | |
| 254 | 3-074-742-01 | GEAR (SHAFT) | |
| 255 | 4-951-619-11 | CUSHION (A) | |
| 256 | 3-074-735-01 | GEAR (IDLER) | |
| 257 | 3-074-736-01 | GEAR (CHUCK) | |
| 258 | 3-074-741-01 | GEAR (LOADING B) | |
| 259 | 3-074-738-01 | GEAR (SWING) | |
| 260 | 3-074-739-01 | COLLAR (SWING) | |
| 261 | 3-016-533-11 | WASHER (FR), STOPPER | |
| 262 | 3-074-740-01 | GEAR (LOADING C) | |
| 263 | X-4956-104-A | HOLDER (BU) ASSY | |
| 264 | 4-227-549-11 | INSULATOR | |
| ⚠ 265 | 8-820-244-02 | OPTICAL PICK-UP (KSM-215DCP/C2NP) | |
| 266 | 4-227-045-11 | SPRING (INSULATOR), COIL | |

| Ref. No. | Part No. | Description | Remark |
|---|---|---|---|
| 267 | 4-985-672-01 | SCREW (+PTPWH M2.6), FLOATING | |
| 268 | 4-231-151-01 | STOPPER (BU) | |
| 269 | A-4751-045-A | BD81A BOARD, COMPLETE | |
| 270 | 3-087-053-01 | +BVTP 2.6 (3CR) | |
| 271 | A-4713-281-A | CHUCK ASSY | |
| 272 | 1-832-404-21 | CABLE, FLEXIBLE FLAT (16 CORE) | |
| 273 | 1-452-925-21 | MAGNET ASSY | |
| 274 | 4-231-777-02 | SHEET (KH2) | |
| 275 | X-4953-195-3 | PULLEY (AT) ASSY | |
| 276 | 1-828-664-11 | WIRE (FLAT TYPE) (27 CORE) | |
| M901 | X-3952-411-1 | MOTOR ASSY, LOADING (LOADING) | |
| RE901 | 1-418-746-11 | ENCODER, ROTARY | |
| S101 | 1-771-853-11 | SWITCH, DETECTION (LIMIT) | |
| #1 | 7-685-646-79 | SCREW +BVTP 3X8 TYPE2 IT-3 | |
| #4 | 7-685-534-19 | SCREW +BTP 2.6X8 TYPE2 N-S | |
| #6 | 7-621-259-25 | SCREW +P 2.6X4 | |

# SECTION 8
# ELECTRICAL PARTS LIST

BD81A

**Note:**

- Due to standardization, replacements in the parts list may be different from the parts specified in the diagrams or the components used on the set.
- -XX and -X mean standardized parts, so they may have some difference from the original one.
- RESISTORS
  All resistors are in ohms.
  METAL: Metal-film resistor.
  METAL OXIDE: Metal oxide-film resistor.
  F: nonflammable
- Items marked "*" are not stocked since they are seldom required for routine service. Some delay should be anticipated when ordering these items.
- SEMICONDUCTORS
  In each case, u: µ, for example:
  uA. . : µA. . , uPA. . , µPA. . ,
  uPB. . : µPB. . , uPC. . , µPC. . ,
  uPD. . : µPD. .
- CAPACITORS
  uF: µF
- COILS
  uH: µH

The components identified by mark ⚠ or dotted line with mark ⚠ are critical for safety.
Replace only with part number specified.

Les composants identifiés par une marque ⚠ sont critiques pour la sécurité.
Ne les remplacer que par une pièce portant le numéro spécifié.

When indicating parts by reference number, please include the board.

| Ref. No. | Part No. | Description | | | Remark |
|---|---|---|---|---|---|
| | A-4751-045-A | BD81A BOARD, COMPLETE | | | |
| | | ********** | | | |
| | | < CAPACITOR > | | | |
| C10 | 1-165-989-11 | CERAMIC CHIP | 10uF | 10% | 6.3V |
| C11 | 1-165-989-11 | CERAMIC CHIP | 10uF | 10% | 6.3V |
| C14 | 1-164-360-11 | CERAMIC CHIP | 0.1uF | | 16V |
| C15 | 1-164-360-11 | CERAMIC CHIP | 0.1uF | | 16V |
| C16 | 1-115-156-11 | CERAMIC CHIP | 1uF | | 10V |
| C17 | 1-126-210-21 | ELECT CHIP | 220uF | 20% | 4V |
| C18 | 1-162-964-11 | CERAMIC CHIP | 0.001uF | 10% | 50V |
| C111 | 1-162-967-11 | CERAMIC CHIP | 0.0033uF | 10% | 50V |
| C112 | 1-164-315-11 | CERAMIC CHIP | 470PF | 5% | 50V |
| C113 | 1-162-967-11 | CERAMIC CHIP | 0.0033uF | 10% | 50V |
| C114 | 1-164-315-11 | CERAMIC CHIP | 470PF | 5% | 50V |
| C115 | 1-164-360-11 | CERAMIC CHIP | 0.1uF | | 16V |
| C116 | 1-128-995-21 | ELECT CHIP | 100uF | 20% | 10V |
| C122 | 1-107-826-11 | CERAMIC CHIP | 0.1uF | 10% | 16V |
| C123 | 1-107-826-11 | CERAMIC CHIP | 0.1uF | 10% | 16V |
| C124 | 1-162-959-11 | CERAMIC CHIP | 330PF | 5% | 50V |
| C125 | 1-164-360-11 | CERAMIC CHIP | 0.1uF | | 16V |
| C131 | 1-162-927-11 | CERAMIC CHIP | 100PF | 5% | 50V |
| C132 | 1-117-863-11 | CERAMIC CHIP | 0.47uF | 10% | 6.3V |
| C133 | 1-162-970-11 | CERAMIC CHIP | 0.01uF | 10% | 25V |
| C134 | 1-164-360-11 | CERAMIC CHIP | 0.1uF | | 16V |
| C141 | 1-107-826-11 | CERAMIC CHIP | 0.1uF | 10% | 16V |
| C142 | 1-162-965-11 | CERAMIC CHIP | 0.0015uF | 10% | 50V |
| C143 | 1-164-360-11 | CERAMIC CHIP | 0.1uF | | 16V |
| C151 | 1-128-995-21 | ELECT CHIP | 100uF | 20% | 10V |
| C161 | 1-164-360-11 | CERAMIC CHIP | 0.1uF | | 16V |
| C162 | 1-164-360-11 | CERAMIC CHIP | 0.1uF | | 16V |
| C163 | 1-164-360-11 | CERAMIC CHIP | 0.1uF | | 16V |
| C171 | 1-162-919-11 | CERAMIC CHIP | 22PF | 5% | 50V |
| C172 | 1-162-920-11 | CERAMIC CHIP | 27PF | 5% | 50V |
| C174 | 1-164-360-11 | CERAMIC CHIP | 0.1uF | | 16V |
| C181 | 1-164-360-11 | CERAMIC CHIP | 0.1uF | | 16V |
| C182 | 1-164-360-11 | CERAMIC CHIP | 0.1uF | | 16V |
| C183 | 1-124-778-00 | ELECT CHIP | 22uF | 20% | 6.3V |
| C184 | 1-124-778-00 | ELECT CHIP | 22uF | 20% | 6.3V |
| C185 | 1-164-315-11 | CERAMIC CHIP | 470PF | 5% | 50V |
| C186 | 1-164-315-11 | CERAMIC CHIP | 470PF | 5% | 50V |
| C194 | 1-164-360-11 | CERAMIC CHIP | 0.1uF | | 16V |
| C195 | 1-164-360-11 | CERAMIC CHIP | 0.1uF | | 16V |
| C196 | 1-164-360-11 | CERAMIC CHIP | 0.1uF | | 16V |
| C201 | 1-128-995-21 | ELECT CHIP | 100uF | 20% | 10V |
| C203 | 1-128-995-21 | ELECT CHIP | 100uF | 20% | 10V |
| C209 | 1-162-970-11 | CERAMIC CHIP | 0.01uF | 10% | 25V |
| C210 | 1-107-826-11 | CERAMIC CHIP | 0.1uF | 10% | 16V |
| C211 | 1-164-230-11 | CERAMIC CHIP | 220PF | 5% | 50V |
| C212 | 1-162-919-11 | CERAMIC CHIP | 22PF | 5% | 50V |
| C213 | 1-162-919-11 | CERAMIC CHIP | 22PF | 5% | 50V |
| C251 | 1-162-969-11 | CERAMIC CHIP | 0.0068uF | 10% | 25V |
| C252 | 1-164-360-11 | CERAMIC CHIP | 0.1uF | | 16V |
| C255 | 1-164-360-11 | CERAMIC CHIP | 0.1uF | | 16V |
| C257 | 1-164-360-11 | CERAMIC CHIP | 0.1uF | | 16V |
| C258 | 1-164-360-11 | CERAMIC CHIP | 0.1uF | | 16V |
| C259 | 1-164-360-11 | CERAMIC CHIP | 0.1uF | | 16V |
| C260 | 1-128-394-11 | ELECT CHIP | 220uF | 20% | 10V |
| C302 | 1-164-360-11 | CERAMIC CHIP | 0.1uF | | 16V |
| C303 | 1-164-360-11 | CERAMIC CHIP | 0.1uF | | 16V |
| C305 | 1-126-210-21 | ELECT CHIP | 220uF | 20% | 4V |
| C306 | 1-164-360-11 | CERAMIC CHIP | 0.1uF | | 16V |
| C307 | 1-164-360-11 | CERAMIC CHIP | 0.1uF | | 16V |
| C308 | 1-126-208-21 | ELECT CHIP | 47uF | 20% | 4V |
| C309 | 1-164-360-11 | CERAMIC CHIP | 0.1uF | | 16V |
| C310 | 1-164-360-11 | CERAMIC CHIP | 0.1uF | | 16V |
| C311 | 1-164-360-11 | CERAMIC CHIP | 0.1uF | | 16V |
| C312 | 1-164-360-11 | CERAMIC CHIP | 0.1uF | | 16V |
| C313 | 1-164-360-11 | CERAMIC CHIP | 0.1uF | | 16V |
| C314 | 1-126-208-21 | ELECT CHIP | 47uF | 20% | 4V |
| C315 | 1-107-826-11 | CERAMIC CHIP | 0.1uF | 10% | 16V |
| C316 | 1-162-966-11 | CERAMIC CHIP | 0.0022uF | 10% | 50V |
| C317 | 1-162-970-11 | CERAMIC CHIP | 0.01uF | 10% | 25V |
| C318 | 1-162-970-11 | CERAMIC CHIP | 0.01uF | 10% | 25V |
| C320 | 1-216-864-11 | SHORT CHIP | 0 | | |
| | | < CONNECTOR > | | | |
| CN101 | 1-770-425-51 | CONNECTOR, FFC/FPC 16P | | | |
| CN201 | 1-784-835-51 | CONNECTOR, FFC (LIF(NON-ZIF)) 27P | | | |
| | | < FERRITE BEAD > | | | |
| FB301 | 1-500-445-21 | FERRITE, EMI (SMD) (2012) | | | |
| | | < IC > | | | |
| IC101 | 8-752-425-12 | IC CXD3059AR | | | |
| IC251 | 6-705-808-01 | IC BA5947FM-E2 | | | |
| IC301 | 6-705-365-01 | IC TC94A34FG-002 | | | |
| IC303 | 6-705-807-01 | IC BH15FB1WG | | | |

BD81A | CD-L | CD-R | CURSOR MT

| Ref. No. | Part No. | Description | | | Remark |
|---|---|---|---|---|---|
| | | < TRANSISTOR > | | | |
| Q10 | 6-551-120-01 | TRANSISTOR 2SA2119K | | | |
| | | < RESISTOR > | | | |
| R10 | 1-216-791-11 | METAL CHIP | 3.3 | 5% | 1/10W |
| R11 | 1-216-864-11 | SHORT CHIP | 0 | | |
| R12 | 1-216-845-11 | METAL CHIP | 100K | 5% | 1/10W |
| R13 | 1-218-446-11 | METAL CHIP | 1 | 5% | 1/10W |
| R111 | 1-216-821-11 | METAL CHIP | 1K | 5% | 1/10W |
| R112 | 1-216-835-11 | METAL CHIP | 15K | 5% | 1/10W |
| R113 | 1-216-821-11 | METAL CHIP | 1K | 5% | 1/10W |
| R114 | 1-216-835-11 | METAL CHIP | 15K | 5% | 1/10W |
| R121 | 1-216-835-11 | METAL CHIP | 15K | 5% | 1/10W |
| R131 | 1-216-857-11 | METAL CHIP | 1M | 5% | 1/10W |
| R132 | 1-216-833-11 | METAL CHIP | 10K | 5% | 1/10W |
| R133 | 1-216-848-11 | METAL CHIP | 180K | 5% | 1/10W |
| R141 | 1-216-829-11 | METAL CHIP | 4.7K | 5% | 1/10W |
| R142 | 1-216-821-11 | METAL CHIP | 1K | 5% | 1/10W |
| R143 | 1-216-827-11 | METAL CHIP | 3.3K | 5% | 1/10W |
| R151 | 1-216-864-11 | SHORT CHIP | 0 | | |
| R161 | 1-216-809-11 | METAL CHIP | 100 | 5% | 1/10W |
| R162 | 1-216-841-11 | METAL CHIP | 47K | 5% | 1/10W |
| R163 | 1-216-809-11 | METAL CHIP | 100 | 5% | 1/10W |
| R165 | 1-216-864-11 | SHORT CHIP | 0 | | |
| R171 | 1-216-817-11 | METAL CHIP | 470 | 5% | 1/10W |
| R172 | 1-216-857-11 | METAL CHIP | 1M | 5% | 1/10W |
| R173 | 1-216-295-11 | SHORT CHIP | 0 | | |
| R181 | 1-216-809-11 | METAL CHIP | 100 | 5% | 1/10W |
| R182 | 1-216-809-11 | METAL CHIP | 100 | 5% | 1/10W |
| R191 | 1-216-864-11 | SHORT CHIP | 0 | | |
| R201 | 1-500-445-21 | FERRITE, EMI (SMD) (2012) | | | |
| R203 | 1-216-864-11 | SHORT CHIP | 0 | | |
| R204 | 1-500-445-21 | FERRITE, EMI (SMD) (2012) | | | |
| R205 | 1-216-864-11 | SHORT CHIP | 0 | | |
| R251 | 1-216-833-11 | METAL CHIP | 10K | 5% | 1/10W |
| R252 | 1-216-837-11 | METAL CHIP | 22K | 5% | 1/10W |
| R253 | 1-216-833-11 | METAL CHIP | 10K | 5% | 1/10W |
| R301 | 1-216-845-11 | METAL CHIP | 100K | 5% | 1/10W |
| R302 | 1-216-833-11 | METAL CHIP | 10K | 5% | 1/10W |
| R303 | 1-216-845-11 | METAL CHIP | 100K | 5% | 1/10W |
| R305 | 1-216-845-11 | METAL CHIP | 100K | 5% | 1/10W |
| R306 | 1-216-864-11 | SHORT CHIP | 0 | | |
| R307 | 1-216-833-11 | METAL CHIP | 10K | 5% | 1/10W |
| R313 | 1-216-813-11 | METAL CHIP | 220 | 5% | 1/10W |
| R351 | 1-216-809-11 | METAL CHIP | 100 | 5% | 1/10W |
| R352 | 1-216-809-11 | METAL CHIP | 100 | 5% | 1/10W |
| R353 | 1-216-809-11 | METAL CHIP | 100 | 5% | 1/10W |
| R354 | 1-216-809-11 | METAL CHIP | 100 | 5% | 1/10W |
| R401 | 1-216-809-11 | METAL CHIP | 100 | 5% | 1/10W |
| R402 | 1-216-809-11 | METAL CHIP | 100 | 5% | 1/10W |
| R403 | 1-216-809-11 | METAL CHIP | 100 | 5% | 1/10W |
| R404 | 1-216-809-11 | METAL CHIP | 100 | 5% | 1/10W |
| R405 | 1-216-809-11 | METAL CHIP | 100 | 5% | 1/10W |
| R406 | 1-216-809-11 | METAL CHIP | 100 | 5% | 1/10W |
| R407 | 1-216-809-11 | METAL CHIP | 100 | 5% | 1/10W |
| R408 | 1-216-809-11 | METAL CHIP | 100 | 5% | 1/10W |
| R409 | 1-216-809-11 | METAL CHIP | 100 | 5% | 1/10W |
| R410 | 1-216-809-11 | METAL CHIP | 100 | 5% | 1/10W |
| R411 | 1-216-809-11 | METAL CHIP | 100 | 5% | 1/10W |
| R412 | 1-216-809-11 | METAL CHIP | 100 | 5% | 1/10W |
| R419 | 1-216-809-11 | METAL CHIP | 100 | 5% | 1/10W |
| | | < VIBRATOR > | | | |
| X171 | 1-767-408-21 | VIBRATOR, CRYSTAL (16.9344MHz) | | | |
| ********** | | | | | |
| | | CD-L BOARD | | | |
| | | ********** | | | |
| | | < RESISTOR > | | | |
| R834 | 1-216-835-11 | METAL CHIP | 15K | 5% | 1/10W |
| R866 | 1-216-839-11 | METAL CHIP | 33K | 5% | 1/10W |
| R896 | 1-216-837-11 | METAL CHIP | 22K | 5% | 1/10W |
| | | < SWITCH > | | | |
| S937 | 1-762-875-21 | SWITCH, KEYBOARD (DISC SKIP) | | | |
| S938 | 1-762-875-21 | SWITCH, KEYBOARD (EX-CHANGE) | | | |
| S939 | 1-762-875-21 | SWITCH, KEYBOARD (⏏ OPEN/CLOSE) | | | |
| ********** | | | | | |
| | | CD-R BOARD | | | |
| | | ********** | | | |
| | | < RESISTOR > | | | |
| R872 | 1-216-827-11 | METAL CHIP | 3.3K | 5% | 1/10W |
| R873 | 1-216-829-11 | METAL CHIP | 4.7K | 5% | 1/10W |
| R874 | 1-218-867-11 | METAL CHIP | 6.8K | 0.5% | 1/10W |
| R875 | 1-216-833-11 | METAL CHIP | 10K | 5% | 1/10W |
| R876 | 1-216-835-11 | METAL CHIP | 15K | 5% | 1/10W |
| R877 | 1-216-837-11 | METAL CHIP | 22K | 5% | 1/10W |
| | | < SWITCH > | | | |
| S950 | 1-762-875-21 | SWITCH, KEYBOARD (ALBUM +/ ▶▶) | | | |
| S951 | 1-762-875-21 | SWITCH, KEYBOARD (ALBUM –/ ◀◀) | | | |
| S952 | 1-762-875-21 | SWITCH, KEYBOARD (▶▶I) | | | |
| S953 | 1-762-875-21 | SWITCH, KEYBOARD (I◀◀ ) | | | |
| S954 | 1-762-875-21 | SWITCH, KEYBOARD (■) | | | |
| S955 | 1-762-875-21 | SWITCH, KEYBOARD (▶ II) | | | |
| ********** | | | | | |
| | | CURSOR MT BOARD | | | |
| | | ********** | | | |
| | | < RESISTOR > | | | |
| R979 | 1-216-833-11 | METAL CHIP | 10K | 5% | 1/10W |
| R980 | 1-216-835-11 | METAL CHIP | 15K | 5% | 1/10W |
| R981 | 1-216-837-11 | METAL CHIP | 22K | 5% | 1/10W |
| R982 | 1-216-839-11 | METAL CHIP | 33K | 5% | 1/10W |
| | | < SWITCH > | | | |
| S970 | 1-771-879-11 | SWITCH, TACTILE (ENTER (CURSOR)) | | | |
| ********** | | | | | |

FUNCTION SW | GAME HP | IPOD | JOG-A | JOG-B | LEFT-BTTN

| Ref. No. | Part No. | Description | | | Remark |
|---|---|---|---|---|---|
| | | FUNCTION SW BOARD | | | |
| | | ********** | | | |
| | | < RESISTOR > | | | |
| R832 | 1-216-835-11 | METAL CHIP | 15K | 5% | 1/10W |
| | | < SWITCH > | | | |
| S930 | 1-762-875-21 | SWITCH, KEYBOARD (FUNCTION) | | | |
| ********** | | | | | |
| | | GAME HP BOARD | | | |
| | | ********** | | | |
| | | < CAPACITOR > | | | |
| C841 | 1-107-826-11 | CERAMIC CHIP | 0.1uF | 10% | 16V |
| C842 | 1-107-826-11 | CERAMIC CHIP | 0.1uF | 10% | 16V |
| C843 | 1-107-826-11 | CERAMIC CHIP | 0.1uF | 10% | 16V |
| C844 | 1-107-826-11 | CERAMIC CHIP | 0.1uF | 10% | 16V |
| | | < CONNECTOR > | | | |
| CN801 | 1-564-720-11 | PIN, CONNECTOR (SMALL TYPE) 4P | | | |
| CN802 | 1-785-328-11 | PIN, CONNECTOR (LIGHT ANGLE) 2P | | | |
| CN803 | 1-564-719-11 | PIN, CONNECTOR (SMALL TYPE) 3P | | | |
| | | < JACK > | | | |
| J580 | 1-764-592-11 | JACK, PIN 3P (GAME INPUT VIDEO,AUDIO) | | | |
| J851 | 1-770-226-11 | JACK (LARGE TYPE) (PHONES) | | | |
| | | < RESISTOR > | | | |
| R826 | 1-216-809-11 | METAL CHIP | 100 | 5% | 1/10W |
| R827 | 1-216-849-11 | METAL CHIP | 220K | 5% | 1/10W |
| R828 | 1-216-849-11 | METAL CHIP | 220K | 5% | 1/10W |
| R829 | 1-216-821-11 | METAL CHIP | 1K | 5% | 1/10W |
| R830 | 1-216-821-11 | METAL CHIP | 1K | 5% | 1/10W |
| ********** | | | | | |
| | | IPOD BOARD | | | |
| | | ********** | | | |
| | | < CAPACITOR > | | | |
| C1551 | 1-107-826-11 | CERAMIC CHIP | 0.1uF | 10% | 16V |
| C1553 | 1-107-826-11 | CERAMIC CHIP | 0.1uF | 10% | 16V |
| C1554 | 1-162-919-11 | CERAMIC CHIP | 22PF | 5% | 50V |
| C1555 | 1-162-919-11 | CERAMIC CHIP | 22PF | 5% | 50V |
| C1556 | 1-128-392-11 | ELECT CHIP | 470uF | 20% | 6.3V |
| C1557 | 1-107-826-11 | CERAMIC CHIP | 0.1uF | 10% | 16V |
| | | < CONNECTOR > | | | |
| CN1550 | 1-820-701-11 | PIN, CONNECTOR 30P (Dock for iPod) | | | |
| CN1551 | 1-821-589-21 | PIN, CONNECTOR (PC BOARD) 11P | | | |
| | | < DIODE > | | | |
| D1553 | 6-501-568-01 | DIODE RB521CS-30T2R | | | |
| | | < RESISTOR > | | | |
| R1500 | 1-216-809-11 | METAL CHIP | 100 | 5% | 1/10W |
| R1503 | 1-216-845-11 | METAL CHIP | 100K | 5% | 1/10W |
| R1505 | 1-216-295-11 | SHORT CHIP | 0 | | |
| R1506 | 1-216-295-11 | SHORT CHIP | 0 | | |
| R1550 | 1-216-809-11 | METAL CHIP | 100 | 5% | 1/10W |
| R1553 | 1-216-845-11 | METAL CHIP | 100K | 5% | 1/10W |
| R1555 | 1-216-295-11 | SHORT CHIP | 0 | | |
| R1556 | 1-218-903-11 | METAL CHIP | 220K | 0.5% | 1/10W |
| R1557 | 1-218-907-11 | METAL CHIP | 330K | 0.5% | 1/10W |
| R1558 | 1-216-809-11 | METAL CHIP | 100 | 5% | 1/10W |
| R1563 | 1-216-295-11 | SHORT CHIP | 0 | | |
| R1571 | 1-216-295-11 | SHORT CHIP | 0 | | |
| R1590 | 1-218-895-11 | METAL CHIP | 100K | 0.5% | 1/10W |
| R1591 | 1-218-895-11 | METAL CHIP | 100K | 0.5% | 1/10W |
| R1592 | 1-218-895-11 | METAL CHIP | 100K | 0.5% | 1/10W |
| R1593 | 1-218-895-11 | METAL CHIP | 100K | 0.5% | 1/10W |
| R1594 | 1-218-892-11 | METAL CHIP | 75K | 0.5% | 1/10W |
| R1595 | 1-218-892-11 | METAL CHIP | 75K | 0.5% | 1/10W |
| ********** | | | | | |
| | | JOG-A BOARD (ZX99i) | | | |
| | | ********** | | | |
| | | < CONNECTOR > | | | |
| CN922 | 1-785-333-11 | PIN, CONNECTOR (LIGHT ANGLE) 7P | | | |
| | | < DIODE > | | | |
| D926 | 8-719-060-27 | LED SLR-325MCT31 (X-ROUND ON/OFF) | | | |
| | | < TRANSISTOR > | | | |
| Q917 | 8-729-620-07 | TRANSISTOR 2SC3052EF-T1-LEF | | | |
| | | < RESISTOR > | | | |
| R882 | 1-216-819-11 | METAL CHIP | 680 | 5% | 1/10W |
| R883 | 1-216-817-11 | METAL CHIP | 470 | 5% | 1/10W |
| R890 | 1-216-819-11 | METAL CHIP | 680 | 5% | 1/10W |
| R892 | 1-216-819-11 | METAL CHIP | 680 | 5% | 1/10W |
| | | < SWITCH > | | | |
| S957 | 1-478-133-11 | ENCODER, ROTARY (JOG) | | | |
| S965 | 1-762-875-21 | SWITCH, KEYBOARD (MODE SPEAKERS) | | | |
| S966 | 1-762-875-21 | SWITCH, KEYBOARD (X-ROUND ON/OFF) | | | |
| ********** | | | | | |
| | | JOG-B BOARD (ZX99i) | | | |
| | | ********** | | | |
| | | < RESISTOR > | | | |
| R884 | 1-216-821-11 | METAL CHIP | 1K | 5% | 1/10W |
| | | < SWITCH > | | | |
| S967 | 1-762-875-21 | SWITCH, KEYBOARD (SOUND FLASH) | | | |
| ********** | | | | | |
| | | LEFT-BTTN BOARD | | | |
| | | ********** | | | |
| | | < RESISTOR > | | | |
| R837 | 1-216-833-11 | METAL CHIP | 10K | 5% | 1/10W |
| R840 | 1-218-867-11 | METAL CHIP | 6.8K | 0.5% | 1/10W |
| R843 | 1-216-829-11 | METAL CHIP | 4.7K | 5% | 1/10W |
| R844 | 1-216-827-11 | METAL CHIP | 3.3K | 5% | 1/10W |
| R845 | 1-216-825-11 | METAL CHIP | 2.2K | 5% | 1/10W |
| R846 | 1-216-823-11 | METAL CHIP | 1.5K | 5% | 1/10W |

LEFT-BTTN | MAIN

| Ref. No. | Part No. | Description | | | Remark |
|---|---|---|---|---|---|
| | | < SWITCH > | | | |
| S931 | 1-762-875-21 | SWITCH, KEYBOARD (DISC 5) | | | |
| S932 | 1-762-875-21 | SWITCH, KEYBOARD (PLAY MODE) | | | |
| S933 | 1-762-875-21 | SWITCH, KEYBOARD (DISC 4) | | | |
| S934 | 1-762-875-21 | SWITCH, KEYBOARD (DISC 3) | | | |
| S935 | 1-762-875-21 | SWITCH, KEYBOARD (DISC 1) | | | |
| S936 | 1-762-875-21 | SWITCH, KEYBOARD (DISC 2) | | | |
| ********** | | | | | |
| | A-1616-802-A | MAIN BOARD, COMPLETE (ZX99i) | | | |
| | A-1616-827-A | MAIN BOARD, COMPLETE (ZX66i) | | | |
| | | ********** | | | |
| | 7-685-646-79 | SCREW +BVTP 3X8 TYPE2 IT-3 | | | |
| | | < CAPACITOR > | | | |
| C8 | 1-126-964-11 | ELECT | 10uF | 20% | 50V |
| C12 | 1-126-959-11 | ELECT | 0.47uF | 20% | 50V |
| C13 | 1-162-970-11 | CERAMIC CHIP | 0.01uF | 10% | 25V |
| C14 | 1-104-658-11 | ELECT | 100uF | 20% | 10V |
| C15 | 1-104-658-11 | ELECT | 100uF | 20% | 10V |
| C16 | 1-162-970-11 | CERAMIC CHIP | 0.01uF | 10% | 25V |
| C19 | 1-100-597-11 | CERAMIC CHIP | 0.1uF | 10% | 25V |
| C23 | 1-100-756-11 | CERAMIC CHIP | 0.047uF | 10% | 50V |
| C25 | 1-137-189-11 | FILM | 0.18uF | 5% | 50V (ZX66i) |
| C25 | 1-137-190-11 | FILM | 0.22uF | 5% | 50V (ZX99i) |
| C26 | 1-126-964-11 | ELECT | 10uF | 20% | 50V |
| C27 | 1-137-190-11 | FILM | 0.22uF | 5% | 50V (ZX66i) |
| C27 | 1-136-170-00 | FILM | 0.27uF | 5% | 50V (ZX99i) |
| C28 | 1-126-964-11 | ELECT | 10uF | 20% | 50V |
| C29 | 1-126-961-11 | ELECT | 2.2uF | 20% | 50V |
| C30 | 1-126-964-11 | ELECT | 10uF | 20% | 50V |
| C31 | 1-126-963-11 | ELECT | 4.7uF | 20% | 50V |
| C33 | 1-164-361-11 | CERAMIC CHIP | 0.047uF | | 25V |
| C38 | 1-126-964-11 | ELECT | 10uF | 20% | 50V |
| C39 | 1-126-964-11 | ELECT | 10uF | 20% | 50V |
| C41 | 1-126-960-11 | ELECT | 1uF | 20% | 50V |
| C45 | 1-126-964-11 | ELECT | 10uF | 20% | 50V |
| C46 | 1-114-573-11 | CERAMIC CHIP | 0.0047uF | 5% | 50V |
| C47 | 1-107-726-11 | CERAMIC CHIP | 0.01uF | 10% | 16V |
| C48 | 1-164-227-11 | CERAMIC CHIP | 0.022uF | 10% | 25V |
| C49 | 1-126-959-11 | ELECT | 0.47uF | 20% | 50V |
| C50 | 1-126-964-11 | ELECT | 10uF | 20% | 50V |
| C75 | 1-137-189-11 | FILM | 0.18uF | 5% | 50V (ZX66i) |
| C75 | 1-137-190-11 | FILM | 0.22uF | 5% | 50V (ZX99i) |
| C76 | 1-126-964-11 | ELECT | 10uF | 20% | 50V |
| C77 | 1-137-190-11 | FILM | 0.22uF | 5% | 50V (ZX66i) |
| C77 | 1-136-170-00 | FILM | 0.27uF | 5% | 50V (ZX99i) |
| C78 | 1-126-964-11 | ELECT | 10uF | 20% | 50V |
| C79 | 1-126-961-11 | ELECT | 2.2uF | 20% | 50V |
| C80 | 1-126-964-11 | ELECT | 10uF | 20% | 50V |
| C81 | 1-126-963-11 | ELECT | 4.7uF | 20% | 50V |
| C83 | 1-164-361-11 | CERAMIC CHIP | 0.047uF | | 25V |
| C88 | 1-126-964-11 | ELECT | 10uF | 20% | 50V |
| C89 | 1-126-964-11 | ELECT | 10uF | 20% | 50V |
| C91 | 1-126-964-11 | ELECT | 10uF | 20% | 50V |
| C96 | 1-114-573-11 | CERAMIC CHIP | 0.0047uF | 5% | 50V |
| C97 | 1-107-726-11 | CERAMIC CHIP | 0.01uF | 10% | 16V |
| C98 | 1-164-227-11 | CERAMIC CHIP | 0.022uF | 10% | 25V |
| C100 | 1-126-964-11 | ELECT | 10uF | 20% | 50V |
| C103 | 1-100-153-11 | CERAMIC CHIP | 220PF | 5% | 100V |
| C104 | 1-162-961-11 | CERAMIC CHIP | 330PF | 10% | 50V |
| C105 | 1-126-964-11 | ELECT | 10uF | 20% | 50V |
| C106 | 1-162-927-11 | CERAMIC CHIP | 100PF | 5% | 50V |
| C108 | 1-162-927-11 | CERAMIC CHIP | 100PF | 5% | 50V |
| C109 | 1-130-479-00 | MYLAR | 0.0047uF | 5% | 50V |
| C110 | 1-130-473-00 | MYLAR | 0.0015uF | 5% | 50V |
| C111 | 1-126-960-11 | ELECT | 1uF | 20% | 50V |
| C112 | 1-126-961-11 | ELECT | 2.2uF | 20% | 50V |
| C113 | 1-126-960-11 | ELECT | 1uF | 20% | 50V |
| C114 | 1-126-960-11 | ELECT | 1uF | 20% | 50V |
| C116 | 1-126-964-11 | ELECT | 10uF | 20% | 50V |
| C118 | 1-126-963-11 | ELECT | 4.7uF | 20% | 50V (ZX99i) |
| C126 | 1-162-970-11 | CERAMIC CHIP | 0.01uF | 10% | 25V (ZX99i) |
| C127 | 1-104-658-11 | ELECT | 100uF | 20% | 10V (ZX99i) |
| C128 | 1-126-935-11 | ELECT | 470uF | 20% | 16V (ZX99i) |
| C130 | 1-100-597-11 | CERAMIC CHIP | 0.1uF | 10% | 25V (ZX99i) |
| C131 | 1-137-190-11 | FILM | 0.22uF | 5% | 50V (ZX99i) |
| C132 | 1-136-170-00 | FILM | 0.27uF | 5% | 50V (ZX99i) |
| C133 | 1-126-961-11 | ELECT | 2.2uF | 20% | 50V (ZX99i) |
| C153 | 1-100-153-11 | CERAMIC CHIP | 220PF | 5% | 100V |
| C154 | 1-162-961-11 | CERAMIC CHIP | 330PF | 10% | 50V |
| C155 | 1-126-964-11 | ELECT | 10uF | 20% | 50V |
| C156 | 1-126-964-11 | ELECT | 10uF | 20% | 50V |
| C158 | 1-162-927-11 | CERAMIC CHIP | 100PF | 5% | 50V |
| C159 | 1-130-479-00 | MYLAR | 0.0047uF | 5% | 50V |
| C160 | 1-130-473-00 | MYLAR | 0.0015uF | 5% | 50V |
| C162 | 1-126-961-11 | ELECT | 2.2uF | 20% | 50V |
| C163 | 1-126-960-11 | ELECT | 1uF | 20% | 50V |
| C164 | 1-126-960-11 | ELECT | 1uF | 20% | 50V |
| C166 | 1-162-927-11 | CERAMIC CHIP | 100PF | 5% | 50V |
| C168 | 1-126-963-11 | ELECT | 4.7uF | 20% | 50V (ZX99i) |
| C181 | 1-137-190-11 | FILM | 0.22uF | 5% | 50V (ZX99i) |
| C182 | 1-136-170-00 | FILM | 0.27uF | 5% | 50V (ZX99i) |
| C188 | 1-126-961-11 | ELECT | 2.2uF | 20% | 50V (ZX99i) |
| C202 | 1-126-964-11 | ELECT | 10uF | 20% | 50V |
| C214 | 1-128-934-11 | CERAMIC CHIP | 0.33uF | 20% | 10V |
| C215 | 1-126-964-11 | ELECT | 10uF | 20% | 50V |
| C216 | 1-126-964-11 | ELECT | 10uF | 20% | 50V |
| C217 | 1-164-156-11 | CERAMIC CHIP | 0.1uF | | 25V |
| C227 | 1-126-961-11 | ELECT | 2.2uF | 20% | 50V |
| C277 | 1-126-961-11 | ELECT | 2.2uF | 20% | 50V |
| C300 | 1-107-726-11 | CERAMIC CHIP | 0.01uF | 10% | 16V |
| C301 | 1-107-826-11 | CERAMIC CHIP | 0.1uF | 10% | 16V |

| Ref. No. | Part No. | Description | | | Remark |
|---|---|---|---|---|---|
| C302 | 1-126-947-11 | ELECT | 47uF | 20% | 35V |
| C303 | 1-107-826-11 | CERAMIC CHIP | 0.1uF | 10% | 16V |
| C304 | 1-107-726-11 | CERAMIC CHIP | 0.01uF | 10% | 16V |
| C305 | 1-107-826-11 | CERAMIC CHIP | 0.1uF | 10% | 16V |
| C306 | 1-126-947-11 | ELECT | 47uF | 20% | 35V |
| C307 | 1-107-826-11 | CERAMIC CHIP | 0.1uF | 10% | 16V |
| C320 | 1-107-826-11 | CERAMIC CHIP | 0.1uF | 10% | 16V |
| C321 | 1-107-826-11 | CERAMIC CHIP | 0.1uF | 10% | 16V |
| C322 | 1-126-926-11 | ELECT | 1000uF | 20% | 10V |
| C323 | 1-107-826-11 | CERAMIC CHIP | 0.1uF | 10% | 16V |
| C324 | 1-107-826-11 | CERAMIC CHIP | 0.1uF | 10% | 16V |
| C325 | 1-107-826-11 | CERAMIC CHIP | 0.1uF | 10% | 16V |
| C328 | 1-162-957-11 | CERAMIC CHIP | 220PF | 5% | 50V |
| C329 | 1-162-949-11 | CERAMIC CHIP | 47PF | 5% | 50V |
| C341 | 1-100-566-11 | CERAMIC CHIP | 0.1uF | 10% | 25V |
| C342 | 1-126-916-11 | ELECT | 1000uF | 20% | 6.3V |
| C410 | 1-162-919-11 | CERAMIC CHIP | 22PF | 5% | 50V |
| C411 | 1-162-919-11 | CERAMIC CHIP | 22PF | 5% | 50V |
| C412 | 1-100-756-11 | CERAMIC CHIP | 0.047uF | 10% | 50V |
| C414 | 1-100-597-11 | CERAMIC CHIP | 0.1uF | 10% | 25V |
| C416 | 1-104-656-11 | ELECT | 2200uF | 20% | 6.3V |
| C462 | 1-104-658-11 | ELECT | 100uF | 20% | 10V |
| C464 | 1-100-597-11 | CERAMIC CHIP | 0.1uF | 10% | 25V |
| C496 | 1-100-597-11 | CERAMIC CHIP | 0.1uF | 10% | 25V |
| C498 | 1-126-964-11 | ELECT | 10uF | 20% | 50V |
| C499 | 1-100-597-11 | CERAMIC CHIP | 0.1uF | 10% | 25V |
| C500 | 1-126-936-11 | ELECT | 3300uF | 20% | 16V |
| C501 | 1-162-970-11 | CERAMIC CHIP | 0.01uF | 10% | 25V |
| C502 | 1-126-947-11 | ELECT | 47uF | 20% | 35V |
| C505 | 1-162-970-11 | CERAMIC CHIP | 0.01uF | 10% | 25V |
| C506 | 1-126-933-11 | ELECT | 100uF | 20% | 16V |
| C508 | 1-126-959-11 | ELECT | 0.47uF | 20% | 50V (ZX99i) |
| C509 | 1-126-961-11 | ELECT | 2.2uF | 20% | 50V |
| C510 | 1-126-925-11 | ELECT | 470uF | 20% | 10V |
| C511 | 1-100-597-11 | CERAMIC CHIP | 0.1uF | 10% | 25V |
| C512 | 1-130-483-00 | MYLAR | 0.01uF | 5% | 50V |
| C513 | 1-126-961-11 | ELECT | 2.2uF | 20% | 50V |
| C514 | 1-130-483-00 | MYLAR | 0.01uF | 5% | 50V |
| C515 | 1-126-965-11 | ELECT | 22uF | 20% | 50V |
| C528 | 1-164-156-11 | CERAMIC CHIP | 0.1uF | | 25V |
| C529 | 1-128-548-11 | ELECT | 4700uF | 20% | 25V |
| C534 | 1-104-658-11 | ELECT | 100uF | 20% | 10V |
| C535 | 1-107-826-11 | CERAMIC CHIP | 0.1uF | 10% | 16V |
| C537 | 1-107-826-11 | CERAMIC CHIP | 0.1uF | 10% | 16V |
| C538 | 1-126-947-11 | ELECT | 47uF | 20% | 35V |
| C547 | 1-164-156-11 | CERAMIC CHIP | 0.1uF | | 25V |
| C554 | 1-164-156-11 | CERAMIC CHIP | 0.1uF | | 25V |
| C555 | 1-104-658-11 | ELECT | 100uF | 20% | 10V |
| C586 | 1-107-826-11 | CERAMIC CHIP | 0.1uF | 10% | 16V |
| C587 | 1-107-826-11 | CERAMIC CHIP | 0.1uF | 10% | 16V |
| C591 | 1-126-925-11 | ELECT | 470uF | 20% | 10V |
| C593 | 1-100-566-11 | CERAMIC CHIP | 0.1uF | 10% | 25V |
| C594 | 1-100-566-11 | CERAMIC CHIP | 0.1uF | 10% | 25V |
| C597 | 1-130-483-00 | MYLAR | 0.01uF | 5% | 50V |
| C598 | 1-130-483-00 | MYLAR | 0.01uF | 5% | 50V |
| C599 | 1-104-658-11 | ELECT | 100uF | 20% | 10V |
| C600 | 1-126-935-11 | ELECT | 470uF | 20% | 16V |

| Ref. No. | Part No. | Description | Remark |
|---|---|---|---|
| | | < CONNECTOR > | |
| CN040 | 1-779-277-11 | CONNECTOR, FFC (LIF(NON-ZIF)) 9P | |
| CN200 | 1-784-770-11 | CONNECTOR, FFC 9P | |
| * CN501 | 1-564-713-11 | PIN, CONNECTOR (SMALL TYPE) 11P | |
| CN502 | 1-779-295-11 | CONNECTOR, FFC (LIF(NON-ZIF)) 27P | |
| CN503 | 1-564-706-11 | PIN, CONNECTOR (SMALL TYPE) 4P (ZX99i) | |
| CN505 | 1-778-982-11 | CONNECTOR, BOARD TO BOARD 13P | |
| CN506 | 1-778-982-11 | CONNECTOR, BOARD TO BOARD 13P | |
| CN507 | 1-784-778-11 | CONNECTOR, FFC 17P | |
| CN509 | 1-785-323-11 | PIN, CONNECTOR (STRAIGHT) 11P | |
| * CN513 | 1-564-506-11 | PLUG, CONNECTOR 3P | |
| | | < DIODE > | |
| D208 | 6-501-817-01 | DIODE MA2J1110GLS0 | |
| D209 | 6-500-334-01 | DIODE MC2836-T112-1 | |
| D210 | 6-501-722-01 | DIODE MAZ8043GMLS0 | |
| D501 | 6-500-385-01 | DIODE D3SBA20-4100 | |
| D502 | 6-500-385-01 | DIODE D3SBA20-4100 | |
| D504 | 6-500-522-21 | DIODE 10EDB40-TB3 | |
| D505 | 6-500-522-21 | DIODE 10EDB40-TB3 | |
| D506 | 6-501-817-01 | DIODE MA2J1110GLS0 | |
| D554 | 6-501-772-01 | DIODE MAZ8130GMLS0 | |
| D555 | 6-500-522-21 | DIODE 10EDB40-TB3 | |
| D559 | 6-500-522-21 | DIODE 10EDB40-TB3 | |
| | | < FERRITE BEAD > | |
| FB300 | 1-500-283-11 | INDUCTOR, FERRITE BEAD | |
| FB301 | 1-414-229-11 | INDUCTOR, FERRITE BEAD | |
| FB302 | 1-216-864-11 | SHORT CHIP 0 | |
| FB303 | 1-500-283-11 | INDUCTOR, FERRITE BEAD | |
| FB304 | 1-216-864-11 | SHORT CHIP 0 | |
| FB305 | 1-216-864-11 | SHORT CHIP 0 | |
| FB306 | 1-216-864-11 | SHORT CHIP 0 | |
| | | < IC > | |
| IC100 | 8-759-278-58 | IC NJM4558V-TE2 | |
| IC101 | 6-712-027-01 | IC R2A15216FP | |
| IC102 | 6-709-331-01 | IC R2S15207FP (ZX99i) | |
| IC401 | (Not supplied) | IC R5F3640MDFAR | |
| IC501 | 6-710-643-01 | IC BA00BC0WCP-V5E2 | |
| IC503 | 6-600-461-01 | IC TOTX147L(B) (CD DIGITAL OUT OPTICAL) | |
| IC510 | 6-713-032-01 | IC KIA7809API-U/PF | |
| IC511 | 6-713-032-01 | IC KIA7809API-U/PF | |
| IC513 | 6-701-761-01 | IC uPC3533AHF | |
| IC514 | 8-759-598-69 | IC BA6956AN | |
| IC515 | 8-759-598-69 | IC BA6956AN | |
| IC519 | 8-759-278-58 | IC NJM4558V-TE2 | |
| IC675 | 6-709-450-01 | IC S-24CS16A0I-J8T1G | |
| | | < JACK > | |
| J701 | 1-794-981-11 | JACK, PIN 4P (PC IN,PHONO IN) | |
| J716 | 1-794-970-11 | JACK, PIN 1P (VIDEO OUT) | |
| | | < JUMPER RESISTOR > | |
| JR123 | 1-100-597-11 | CERAMIC CHIP 0.1uF 10% 25V | |
| JR300 | 1-216-296-11 | SHORT CHIP 0 | |
| JR301 | 1-216-296-11 | SHORT CHIP 0 | |
| JR303 | 1-216-864-11 | SHORT CHIP 0 | |
| JR400 | 1-216-296-11 | SHORT CHIP 0 | |

**MAIN**

| Ref. No. | Part No. | Description | | | Remark |
|---|---|---|---|---|---|
| | | < COIL > | | | |
| L300 | 1-412-058-11 | INDUCTOR | 10uH | | |
| | | < TRANSISTOR > | | | |
| Q2 | 8-729-620-07 | TRANSISTOR | 2SC3052EF-T1-LEF | | |
| Q52 | 8-729-620-07 | TRANSISTOR | 2SC3052EF-T1-LEF | | |
| Q100 | 8-729-620-07 | TRANSISTOR | 2SC3052EF-T1-LEF | | |
| Q102 | 8-729-620-07 | TRANSISTOR | 2SC3052EF-T1-LEF | | |
| Q103 | 8-729-620-07 | TRANSISTOR | 2SC3052EF-T1-LEF (ZX99i) | | |
| Q104 | 8-729-620-07 | TRANSISTOR | 2SC3052EF-T1-LEF (ZX99i) | | |
| Q150 | 8-729-620-07 | TRANSISTOR | 2SC3052EF-T1-LEF | | |
| Q153 | 8-729-620-07 | TRANSISTOR | 2SC3052EF-T1-LEF (ZX99i) | | |
| Q154 | 8-729-620-07 | TRANSISTOR | 2SC3052EF-T1-LEF (ZX99i) | | |
| Q207 | 8-729-038-28 | TRANSISTOR | RT1N441C-TP-1 | | |
| Q208 | 8-729-620-07 | TRANSISTOR | 2SC3052EF-T1-LEF | | |
| Q209 | 8-729-037-13 | TRANSISTOR | KTA1271Y | | |
| Q210 | 8-729-620-07 | TRANSISTOR | 2SC3052EF-T1-LEF | | |
| Q211 | 8-729-620-07 | TRANSISTOR | 2SC3052EF-T1-LEF | | |
| Q290 | 8-729-027-23 | TRANSISTOR | DTA114EKA-T146 | | |
| Q500 | 8-729-620-07 | TRANSISTOR | 2SC3052EF-T1-LEF | | |
| Q502 | 8-729-040-76 | TRANSISTOR | KTA1273-Y-AT | | |
| Q503 | 8-729-620-07 | TRANSISTOR | 2SC3052EF-T1-LEF | | |
| Q505 | 8-729-027-23 | TRANSISTOR | DTA114EKA-T146 | | |
| Q552 | 6-550-185-01 | TRANSISTOR | RT1P137P-TP-1 | | |
| Q554 | 8-729-027-43 | TRANSISTOR | DTC114EKA-T146 | | |
| Q555 | 8-729-620-07 | TRANSISTOR | 2SC3052EF-T1-LEF | | |
| Q557 | 8-729-038-28 | TRANSISTOR | RT1N441C-TP-1 | | |
| Q870 | 8-729-620-07 | TRANSISTOR | 2SC3052EF-T1-LEF | | |
| | | < RESISTOR > | | | |
| R8 | 1-216-864-11 | SHORT CHIP | 0 | | |
| R11 | 1-216-833-11 | METAL CHIP | 10K | 5% | 1/10W |
| R12 | 1-216-833-11 | METAL CHIP | 10K | 5% | 1/10W |
| R16 | 1-216-833-11 | METAL CHIP | 10K | 5% | 1/10W |
| R17 | 1-216-819-11 | METAL CHIP | 680 | 5% | 1/10W (ZX99i) |
| R17 | 1-216-822-11 | METAL CHIP | 1.2K | 5% | 1/10W (ZX66i) |
| R19 | 1-216-833-11 | METAL CHIP | 10K | 5% | 1/10W |
| R21 | 1-216-833-11 | METAL CHIP | 10K | 5% | 1/10W |
| R22 | 1-216-841-11 | METAL CHIP | 47K | 5% | 1/10W |
| R28 | 1-216-833-11 | METAL CHIP | 10K | 5% | 1/10W |
| R29 | 1-216-857-11 | METAL CHIP | 1M | 5% | 1/10W |
| R30 | 1-216-845-11 | METAL CHIP | 100K | 5% | 1/10W |
| R33 | 1-216-829-11 | METAL CHIP | 4.7K | 5% | 1/10W |
| R58 | 1-216-864-11 | SHORT CHIP | 0 | | |
| R67 | 1-216-819-11 | METAL CHIP | 680 | 5% | 1/10W (ZX99i) |
| R67 | 1-216-822-11 | METAL CHIP | 1.2K | 5% | 1/10W (ZX66i) |
| R69 | 1-216-833-11 | METAL CHIP | 10K | 5% | 1/10W |
| R71 | 1-216-833-11 | METAL CHIP | 10K | 5% | 1/10W |
| R72 | 1-216-841-11 | METAL CHIP | 47K | 5% | 1/10W |
| R78 | 1-216-833-11 | METAL CHIP | 10K | 5% | 1/10W |
| R83 | 1-216-829-11 | METAL CHIP | 4.7K | 5% | 1/10W |
| R100 | 1-218-867-11 | METAL CHIP | 6.8K | 0.5% | 1/10W |
| R101 | 1-216-825-11 | METAL CHIP | 2.2K | 5% | 1/10W |
| R106 | 1-216-845-11 | METAL CHIP | 100K | 5% | 1/10W |
| R107 | 1-216-821-11 | METAL CHIP | 1K | 5% | 1/10W |
| R109 | 1-216-821-11 | METAL CHIP | 1K | 5% | 1/10W |
| R110 | 1-216-821-11 | METAL CHIP | 1K | 5% | 1/10W |
| R111 | 1-216-821-11 | METAL CHIP | 1K | 5% | 1/10W |
| R112 | 1-216-854-11 | METAL CHIP | 560K | 5% | 1/10W |
| R113 | 1-216-841-11 | METAL CHIP | 47K | 5% | 1/10W |
| R115 | 1-216-841-11 | METAL CHIP | 47K | 5% | 1/10W |
| R116 | 1-216-821-11 | METAL CHIP | 1K | 5% | 1/10W |
| R117 | 1-216-845-11 | METAL CHIP | 100K | 5% | 1/10W |
| R118 | 1-218-879-11 | METAL CHIP | 22K | 0.5% | 1/10W |
| R119 | 1-218-879-11 | METAL CHIP | 22K | 0.5% | 1/10W |
| R120 | 1-218-879-11 | METAL CHIP | 22K | 0.5% | 1/10W |
| R121 | 1-218-879-11 | METAL CHIP | 22K | 0.5% | 1/10W |
| R122 | 1-216-821-11 | METAL CHIP | 1K | 5% | 1/10W |
| R123 | 1-216-839-11 | METAL CHIP | 33K | 5% | 1/10W |
| R125 | 1-216-833-11 | METAL CHIP | 10K | 5% | 1/10W |
| R126 | 1-216-819-11 | METAL CHIP | 680 | 5% | 1/10W (ZX99i) |
| R127 | 1-216-833-11 | METAL CHIP | 10K | 5% | 1/10W (ZX99i) |
| R133 | 1-216-841-11 | METAL CHIP | 47K | 5% | 1/10W |
| R134 | 1-216-833-11 | METAL CHIP | 10K | 5% | 1/10W |
| R135 | 1-216-821-11 | METAL CHIP | 1K | 5% | 1/10W |
| R137 | 1-216-821-11 | METAL CHIP | 1K | 5% | 1/10W (ZX99i) |
| R138 | 1-216-841-11 | METAL CHIP | 47K | 5% | 1/10W (ZX99i) |
| R139 | 1-216-833-11 | METAL CHIP | 10K | 5% | 1/10W (ZX99i) |
| R141 | 1-216-841-11 | METAL CHIP | 47K | 5% | 1/10W (ZX99i) |
| R150 | 1-218-867-11 | METAL CHIP | 6.8K | 0.5% | 1/10W |
| R151 | 1-216-825-11 | METAL CHIP | 2.2K | 5% | 1/10W |
| R156 | 1-216-845-11 | METAL CHIP | 100K | 5% | 1/10W |
| R157 | 1-216-821-11 | METAL CHIP | 1K | 5% | 1/10W |
| R159 | 1-216-821-11 | METAL CHIP | 1K | 5% | 1/10W |
| R160 | 1-216-821-11 | METAL CHIP | 1K | 5% | 1/10W |
| R161 | 1-216-821-11 | METAL CHIP | 1K | 5% | 1/10W |
| R162 | 1-216-854-11 | METAL CHIP | 560K | 5% | 1/10W |
| R163 | 1-216-841-11 | METAL CHIP | 47K | 5% | 1/10W |
| R165 | 1-216-841-11 | METAL CHIP | 47K | 5% | 1/10W |
| R166 | 1-216-821-11 | METAL CHIP | 1K | 5% | 1/10W |
| R167 | 1-216-845-11 | METAL CHIP | 100K | 5% | 1/10W |
| R168 | 1-218-879-11 | METAL CHIP | 22K | 0.5% | 1/10W |
| R169 | 1-218-879-11 | METAL CHIP | 22K | 0.5% | 1/10W |
| R170 | 1-218-879-11 | METAL CHIP | 22K | 0.5% | 1/10W |
| R171 | 1-218-879-11 | METAL CHIP | 22K | 0.5% | 1/10W |
| R172 | 1-216-821-11 | METAL CHIP | 1K | 5% | 1/10W |
| R173 | 1-216-839-11 | METAL CHIP | 33K | 5% | 1/10W |
| R175 | 1-216-833-11 | METAL CHIP | 10K | 5% | 1/10W |
| R176 | 1-216-819-11 | METAL CHIP | 680 | 5% | 1/10W (ZX99i) |
| R177 | 1-216-833-11 | METAL CHIP | 10K | 5% | 1/10W (ZX99i) |
| R183 | 1-216-841-11 | METAL CHIP | 47K | 5% | 1/10W |
| R184 | 1-216-833-11 | METAL CHIP | 10K | 5% | 1/10W |
| R185 | 1-216-821-11 | METAL CHIP | 1K | 5% | 1/10W |
| R187 | 1-216-821-11 | METAL CHIP | 1K | 5% | 1/10W (ZX99i) |
| R188 | 1-216-841-11 | METAL CHIP | 47K | 5% | 1/10W (ZX99i) |
| R189 | 1-216-833-11 | METAL CHIP | 10K | 5% | 1/10W (ZX99i) |

| Ref. No. | Part No. | Description | | | Remark |
|---|---|---|---|---|---|
| R191 | 1-216-841-11 | METAL CHIP | 47K | 5% | 1/10W (ZX99i) |
| R208 | 1-216-833-11 | METAL CHIP | 10K | 5% | 1/10W |
| R209 | 1-216-809-11 | METAL CHIP | 100 | 5% | 1/10W |
| R222 | 1-216-833-11 | METAL CHIP | 10K | 5% | 1/10W |
| R227 | 1-216-833-11 | METAL CHIP | 10K | 5% | 1/10W |
| R228 | 1-216-845-11 | METAL CHIP | 100K | 5% | 1/10W |
| R229 | 1-216-845-11 | METAL CHIP | 100K | 5% | 1/10W |
| R230 | 1-216-825-11 | METAL CHIP | 2.2K | 5% | 1/10W |
| R231 | 1-216-819-11 | METAL CHIP | 680 | 5% | 1/10W |
| R276 | 1-216-843-11 | METAL CHIP | 68K | 5% | 1/10W |
| R295 | 1-216-855-11 | METAL CHIP | 680K | 5% | 1/10W |
| R296 | 1-216-835-11 | METAL CHIP | 15K | 5% | 1/10W |
| R300 | 1-216-845-11 | METAL CHIP | 100K | 5% | 1/10W |
| R301 | 1-216-841-11 | METAL CHIP | 47K | 5% | 1/10W |
| R302 | 1-216-821-11 | METAL CHIP | 1K | 5% | 1/10W |
| R303 | 1-216-845-11 | METAL CHIP | 100K | 5% | 1/10W |
| R304 | 1-218-285-11 | METAL CHIP | 75 | 5% | 1/10W |
| R305 | 1-216-841-11 | METAL CHIP | 47K | 5% | 1/10W |
| R306 | 1-216-842-11 | METAL CHIP | 56K | 5% | 1/10W |
| R307 | 1-216-835-11 | METAL CHIP | 15K | 5% | 1/10W |
| R308 | 1-216-839-11 | METAL CHIP | 33K | 5% | 1/10W |
| R309 | 1-216-821-11 | METAL CHIP | 1K | 5% | 1/10W |
| R310 | 1-216-841-11 | METAL CHIP | 47K | 5% | 1/10W |
| R311 | 1-216-809-11 | METAL CHIP | 100 | 5% | 1/10W |
| R312 | 1-216-809-11 | METAL CHIP | 100 | 5% | 1/10W |
| R313 | 1-216-809-11 | METAL CHIP | 100 | 5% | 1/10W |
| R314 | 1-216-797-11 | METAL CHIP | 10 | 5% | 1/10W |
| R315 | 1-216-797-11 | METAL CHIP | 10 | 5% | 1/10W |
| R316 | 1-216-864-11 | SHORT CHIP | 0 | | |
| R317 | 1-216-821-11 | METAL CHIP | 1K | 5% | 1/10W |
| R318 | 1-216-864-11 | SHORT CHIP | 0 | | |
| R329 | 1-216-833-11 | METAL CHIP | 10K | 5% | 1/10W |
| R330 | 1-216-833-11 | METAL CHIP | 10K | 5% | 1/10W |
| R331 | 1-216-821-11 | METAL CHIP | 1K | 5% | 1/10W (ZX99i) |
| R332 | 1-216-822-11 | METAL CHIP | 1.2K | 5% | 1/10W (ZX99i) |
| R335 | 1-216-833-11 | METAL CHIP | 10K | 5% | 1/10W |
| R336 | 1-216-833-11 | METAL CHIP | 10K | 5% | 1/10W |
| R344 | 1-216-833-11 | METAL CHIP | 10K | 5% | 1/10W |
| R345 | 1-216-833-11 | METAL CHIP | 10K | 5% | 1/10W |
| R346 | 1-216-833-11 | METAL CHIP | 10K | 5% | 1/10W |
| R365 | 1-216-833-11 | METAL CHIP | 10K | 5% | 1/10W |
| R366 | 1-216-833-11 | METAL CHIP | 10K | 5% | 1/10W |
| R367 | 1-216-833-11 | METAL CHIP | 10K | 5% | 1/10W |
| R368 | 1-216-833-11 | METAL CHIP | 10K | 5% | 1/10W |
| R371 | 1-216-833-11 | METAL CHIP | 10K | 5% | 1/10W |
| R373 | 1-216-833-11 | METAL CHIP | 10K | 5% | 1/10W |
| R374 | 1-216-833-11 | METAL CHIP | 10K | 5% | 1/10W |
| R375 | 1-216-833-11 | METAL CHIP | 10K | 5% | 1/10W |
| R377 | 1-216-833-11 | METAL CHIP | 10K | 5% | 1/10W |
| R381 | 1-216-835-11 | METAL CHIP | 15K | 5% | 1/10W |
| R382 | 1-216-833-11 | METAL CHIP | 10K | 5% | 1/10W |
| R386 | 1-216-833-11 | METAL CHIP | 10K | 5% | 1/10W |
| R391 | 1-216-833-11 | METAL CHIP | 10K | 5% | 1/10W (ZX66i) |
| R395 | 1-216-833-11 | METAL CHIP | 10K | 5% | 1/10W |
| R397 | 1-216-833-11 | METAL CHIP | 10K | 5% | 1/10W |
| R400 | 1-216-809-11 | METAL CHIP | 100 | 5% | 1/10W |
| R401 | 1-216-809-11 | METAL CHIP | 100 | 5% | 1/10W |
| R402 | 1-216-809-11 | METAL CHIP | 100 | 5% | 1/10W |
| R403 | 1-216-809-11 | METAL CHIP | 100 | 5% | 1/10W |
| R404 | 1-216-809-11 | METAL CHIP | 100 | 5% | 1/10W |
| R405 | 1-216-809-11 | METAL CHIP | 100 | 5% | 1/10W |
| R406 | 1-216-809-11 | METAL CHIP | 100 | 5% | 1/10W |
| R407 | 1-216-809-11 | METAL CHIP | 100 | 5% | 1/10W |
| R409 | 1-216-833-11 | METAL CHIP | 10K | 5% | 1/10W |
| R411 | 1-216-851-11 | METAL CHIP | 330K | 5% | 1/10W |
| R413 | 1-216-857-11 | METAL CHIP | 1M | 5% | 1/10W |
| R417 | 1-216-833-11 | METAL CHIP | 10K | 5% | 1/10W |
| R418 | 1-216-809-11 | METAL CHIP | 100 | 5% | 1/10W |
| R419 | 1-216-809-11 | METAL CHIP | 100 | 5% | 1/10W |
| R420 | 1-216-837-11 | METAL CHIP | 22K | 5% | 1/10W |
| R421 | 1-216-809-11 | METAL CHIP | 100 | 5% | 1/10W |
| R422 | 1-216-809-11 | METAL CHIP | 100 | 5% | 1/10W |
| R423 | 1-216-809-11 | METAL CHIP | 100 | 5% | 1/10W |
| R424 | 1-216-809-11 | METAL CHIP | 100 | 5% | 1/10W |
| R425 | 1-216-809-11 | METAL CHIP | 100 | 5% | 1/10W |
| R426 | 1-216-809-11 | METAL CHIP | 100 | 5% | 1/10W |
| R428 | 1-216-809-11 | METAL CHIP | 100 | 5% | 1/10W |
| R429 | 1-216-809-11 | METAL CHIP | 100 | 5% | 1/10W |
| R430 | 1-216-809-11 | METAL CHIP | 100 | 5% | 1/10W |
| R431 | 1-216-809-11 | METAL CHIP | 100 | 5% | 1/10W |
| R432 | 1-216-809-11 | METAL CHIP | 100 | 5% | 1/10W |
| R433 | 1-216-809-11 | METAL CHIP | 100 | 5% | 1/10W |
| R434 | 1-216-809-11 | METAL CHIP | 100 | 5% | 1/10W |
| R435 | 1-216-809-11 | METAL CHIP | 100 | 5% | 1/10W |
| R436 | 1-216-809-11 | METAL CHIP | 100 | 5% | 1/10W |
| R438 | 1-216-809-11 | METAL CHIP | 100 | 5% | 1/10W |
| R442 | 1-216-809-11 | METAL CHIP | 100 | 5% | 1/10W |
| R443 | 1-216-809-11 | METAL CHIP | 100 | 5% | 1/10W |
| R444 | 1-216-809-11 | METAL CHIP | 100 | 5% | 1/10W |
| R445 | 1-216-809-11 | METAL CHIP | 100 | 5% | 1/10W |
| R446 | 1-216-809-11 | METAL CHIP | 100 | 5% | 1/10W |
| R447 | 1-216-809-11 | METAL CHIP | 100 | 5% | 1/10W |
| R448 | 1-216-809-11 | METAL CHIP | 100 | 5% | 1/10W |
| R449 | 1-216-809-11 | METAL CHIP | 100 | 5% | 1/10W |
| R450 | 1-216-809-11 | METAL CHIP | 100 | 5% | 1/10W |
| R465 | 1-216-809-11 | METAL CHIP | 100 | 5% | 1/10W |
| R466 | 1-216-809-11 | METAL CHIP | 100 | 5% | 1/10W |
| R467 | 1-216-809-11 | METAL CHIP | 100 | 5% | 1/10W |
| R468 | 1-216-813-11 | METAL CHIP | 220 | 5% | 1/10W |
| R471 | 1-216-809-11 | METAL CHIP | 100 | 5% | 1/10W |
| R472 | 1-216-809-11 | METAL CHIP | 100 | 5% | 1/10W |
| R473 | 1-216-809-11 | METAL CHIP | 100 | 5% | 1/10W |
| R474 | 1-216-809-11 | METAL CHIP | 100 | 5% | 1/10W |
| R475 | 1-216-809-11 | METAL CHIP | 100 | 5% | 1/10W |
| R476 | 1-216-809-11 | METAL CHIP | 100 | 5% | 1/10W |
| R477 | 1-216-809-11 | METAL CHIP | 100 | 5% | 1/10W |
| R478 | 1-216-809-11 | METAL CHIP | 100 | 5% | 1/10W |
| R479 | 1-216-809-11 | METAL CHIP | 100 | 5% | 1/10W |
| R480 | 1-216-809-11 | METAL CHIP | 100 | 5% | 1/10W |
| R481 | 1-216-821-11 | METAL CHIP | 1K | 5% | 1/10W |
| R482 | 1-216-809-11 | METAL CHIP | 100 | 5% | 1/10W |
| R483 | 1-216-809-11 | METAL CHIP | 100 | 5% | 1/10W |
| R484 | 1-216-809-11 | METAL CHIP | 100 | 5% | 1/10W |
| R485 | 1-216-809-11 | METAL CHIP | 100 | 5% | 1/10W |
| R486 | 1-216-809-11 | METAL CHIP | 100 | 5% | 1/10W |
| R492 | 1-216-833-11 | METAL CHIP | 10K | 5% | 1/10W (ZX99i) |
| R501 | 1-216-821-11 | METAL CHIP | 1K | 5% | 1/10W |

MAIN | MD-94 | MIC | PANEL COM

| Ref. No. | Part No. | Description | | | Remark |
|---|---|---|---|---|---|
| R502 | 1-216-821-11 | METAL CHIP | 1K | 5% | 1/10W |
| R504 | 1-216-833-11 | METAL CHIP | 10K | 5% | 1/10W (ZX99i) |
| R505 | 1-216-833-11 | METAL CHIP | 10K | 5% | 1/10W (ZX99i) |
| R506 | 1-216-857-11 | METAL CHIP | 1M | 5% | 1/10W (ZX99i) |
| R507 | 1-216-843-11 | METAL CHIP | 68K | 5% | 1/10W |
| R509 | 1-249-401-11 | CARBON | 47 | 5% | 1/4W F |
| R510 | 1-249-401-11 | CARBON | 47 | 5% | 1/4W F |
| R511 | 1-249-401-11 | CARBON | 47 | 5% | 1/4W F |
| R512 | 1-216-855-11 | METAL CHIP | 680K | 5% | 1/10W |
| R518 | 1-216-809-11 | METAL CHIP | 100 | 5% | 1/10W |
| R535 | 1-216-829-11 | METAL CHIP | 4.7K | 5% | 1/10W |
| R536 | 1-216-829-11 | METAL CHIP | 4.7K | 5% | 1/10W |
| R538 | 1-216-809-11 | METAL CHIP | 100 | 5% | 1/10W |
| R585 | 1-216-829-11 | METAL CHIP | 4.7K | 5% | 1/10W |
| R586 | 1-216-829-11 | METAL CHIP | 4.7K | 5% | 1/10W |
| R587 | 1-216-845-11 | METAL CHIP | 100K | 5% | 1/10W |
| R588 | 1-216-829-11 | METAL CHIP | 4.7K | 5% | 1/10W |
| R591 | 1-216-295-11 | SHORT CHIP | 0 | | |
| R593 | 1-216-801-11 | METAL CHIP | 22 | 5% | 1/10W |
| R594 | 1-216-846-11 | METAL CHIP | 120K | 5% | 1/10W |
| R595 | 1-216-837-11 | METAL CHIP | 22K | 5% | 1/10W |
| R596 | 1-216-841-11 | METAL CHIP | 47K | 5% | 1/10W |
| R597 | 1-216-835-11 | METAL CHIP | 15K | 5% | 1/10W |
| | | < VIBRATOR > | | | |
| X401 | 1-814-067-11 | OSCILLATOR, CRYSTAL (32.768kHz) | | | |
| X402 | 1-795-482-11 | VIBRATOR, CERAMIC (16MHz) | | | |

**********

MD-94 BOARD
**********

| | | | | | |
|---|---|---|---|---|---|
| | | < CONNECTOR > | | | |
| CN001 | 1-506-490-21 | PIN, CONNECTOR 11P | | | |
| CN002 | 1-784-767-11 | CONNECTOR, FFC 6P | | | |
| * CN003 | 1-564-013-11 | PIN, CONNECTOR 3P | | | |
| CN004 | 1-506-481-11 | PIN, CONNECTOR 2P | | | |
| | | < SWITCH > | | | |
| S001 | 1-786-514-21 | SWITCH, LEVER (SLIDE) (TRAY POSITION DETECT) | | | |

**********

MIC BOARD
**********

| | | | | | |
|---|---|---|---|---|---|
| | | < CAPACITOR > | | | |
| C800 | 1-107-826-11 | CERAMIC CHIP | 0.1uF | 10% | 16V |
| C801 | 1-126-964-11 | ELECT | 10uF | 20% | 50V |
| C802 | 1-126-961-11 | ELECT | 2.2uF | 20% | 50V |
| C804 | 1-164-217-11 | CERAMIC CHIP | 150PF | 5% | 50V |
| C805 | 1-104-666-11 | ELECT | 220uF | 20% | 25V |
| C806 | 1-162-923-11 | CERAMIC CHIP | 47PF | 5% | 50V |
| C807 | 1-126-961-11 | ELECT | 2.2uF | 20% | 50V |
| C808 | 1-107-826-11 | CERAMIC CHIP | 0.1uF | 10% | 16V |
| C809 | 1-126-961-11 | ELECT | 2.2uF | 20% | 50V |
| C810 | 1-164-315-11 | CERAMIC CHIP | 470PF | 5% | 50V |
| C811 | 1-162-923-11 | CERAMIC CHIP | 47PF | 5% | 50V |
| C812 | 1-126-960-11 | ELECT | 1uF | 20% | 50V |
| C813 | 1-115-416-11 | CERAMIC CHIP | 0.001uF | 5% | 25V |
| C814 | 1-126-961-11 | ELECT | 2.2uF | 20% | 50V |
| C815 | 1-162-964-11 | CERAMIC CHIP | 0.001uF | 10% | 50V |
| C817 | 1-162-964-11 | CERAMIC CHIP | 0.001uF | 10% | 50V |
| C818 | 1-107-826-11 | CERAMIC CHIP | 0.1uF | 10% | 16V |
| | | < CONNECTOR > | | | |
| CN920 | 1-564-719-11 | PIN, CONNECTOR (SMALL TYPE) 3P | | | |
| | | < IC > | | | |
| IC850 | 8-759-278-58 | IC NJM4558V-TE2 | | | |
| | | < JACK > | | | |
| J801 | 1-770-226-11 | JACK (LARGE TYPE) (MIC 1) | | | |
| J802 | 1-770-226-11 | JACK (LARGE TYPE) (MIC 2) | | | |
| | | < RESISTOR > | | | |
| R801 | 1-216-845-11 | METAL CHIP | 100K | 5% | 1/10W |
| R802 | 1-216-833-11 | METAL CHIP | 10K | 5% | 1/10W |
| R803 | 1-216-833-11 | METAL CHIP | 10K | 5% | 1/10W |
| R804 | 1-216-809-11 | METAL CHIP | 100 | 5% | 1/10W |
| R805 | 1-216-847-11 | METAL CHIP | 150K | 5% | 1/10W |
| R806 | 1-216-833-11 | METAL CHIP | 10K | 5% | 1/10W |
| R807 | 1-216-819-11 | METAL CHIP | 680 | 5% | 1/10W |
| R808 | 1-216-841-11 | METAL CHIP | 47K | 5% | 1/10W |
| R809 | 1-216-821-11 | METAL CHIP | 1K | 5% | 1/10W |
| R810 | 1-216-845-11 | METAL CHIP | 100K | 5% | 1/10W |
| R811 | 1-216-833-11 | METAL CHIP | 10K | 5% | 1/10W |
| R812 | 1-216-821-11 | METAL CHIP | 1K | 5% | 1/10W |
| R813 | 1-216-821-11 | METAL CHIP | 1K | 5% | 1/10W |
| R814 | 1-216-833-11 | METAL CHIP | 10K | 5% | 1/10W |
| | | < VARIABLE RESISTOR > | | | |
| RV801 | 1-227-452-11 | RES, VAR, CARBON 50K (MIC LEVEL) | | | |

**********

| | | | | | |
|---|---|---|---|---|---|
| | A-1616-806-A | PANEL COM BOARD, COMPLETE | | | |
| | | ********** | | | |
| | 4-253-178-01 | HOLDER, FL | | | |
| | | < CAPACITOR > | | | |
| C900 | 1-126-163-11 | ELECT | 4.7uF | 20% | 50V |
| C903 | 1-107-826-11 | CERAMIC CHIP | 0.1uF | 10% | 16V |
| C904 | 1-107-826-11 | CERAMIC CHIP | 0.1uF | 10% | 16V |
| C905 | 1-107-826-11 | CERAMIC CHIP | 0.1uF | 10% | 16V |
| C910 | 1-162-970-11 | CERAMIC CHIP | 0.01uF | 10% | 25V |
| C916 | 1-107-826-11 | CERAMIC CHIP | 0.1uF | 10% | 16V |
| C917 | 1-162-970-11 | CERAMIC CHIP | 0.01uF | 10% | 25V |
| C918 | 1-126-518-11 | ELECT | 470uF | 20% | 4V |
| C919 | 1-162-970-11 | CERAMIC CHIP | 0.01uF | 10% | 25V |
| C920 | 1-126-947-11 | ELECT | 47uF | 20% | 35V |
| C921 | 1-115-416-11 | CERAMIC CHIP | 0.001uF | 5% | 25V |
| C922 | 1-126-964-11 | ELECT | 10uF | 20% | 50V |
| C923 | 1-162-970-11 | CERAMIC CHIP | 0.01uF | 10% | 25V |
| C924 | 1-100-152-11 | CERAMIC CHIP | 100PF | 5% | 100V |
| C925 | 1-100-152-11 | CERAMIC CHIP | 100PF | 5% | 100V |
| C926 | 1-100-152-11 | CERAMIC CHIP | 100PF | 5% | 100V |
| C927 | 1-100-152-11 | CERAMIC CHIP | 100PF | 5% | 100V |
| C928 | 1-100-152-11 | CERAMIC CHIP | 100PF | 5% | 100V |
| C929 | 1-100-152-11 | CERAMIC CHIP | 100PF | 5% | 100V |

**PANEL COM**

| Ref. No. | Part No. | Description | | | Remark |
|---|---|---|---|---|---|
| C930 | 1-100-152-11 | CERAMIC CHIP | 100PF | 5% | 100V |
| C931 | 1-100-152-11 | CERAMIC CHIP | 100PF | 5% | 100V |
| C932 | 1-100-152-11 | CERAMIC CHIP | 100PF | 5% | 100V |
| C933 | 1-100-152-11 | CERAMIC CHIP | 100PF | 5% | 100V |
| C934 | 1-100-152-11 | CERAMIC CHIP | 100PF | 5% | 100V |
| C935 | 1-100-152-11 | CERAMIC CHIP | 100PF | 5% | 100V |
| C936 | 1-100-152-11 | CERAMIC CHIP | 100PF | 5% | 100V |
| C937 | 1-100-152-11 | CERAMIC CHIP | 100PF | 5% | 100V |
| C938 | 1-100-152-11 | CERAMIC CHIP | 100PF | 5% | 100V |
| C939 | 1-100-152-11 | CERAMIC CHIP | 100PF | 5% | 100V |
| C940 | 1-100-152-11 | CERAMIC CHIP | 100PF | 5% | 100V |
| C941 | 1-100-152-11 | CERAMIC CHIP | 100PF | 5% | 100V |
| C942 | 1-100-152-11 | CERAMIC CHIP | 100PF | 5% | 100V |
| C944 | 1-126-964-11 | ELECT | 10uF | 20% | 50V |
| C945 | 1-125-837-11 | CERAMIC CHIP | 1uF | 10% | 6.3V |
| C946 | 1-164-315-11 | CERAMIC CHIP | 470PF | 5% | 50V |
| C947 | 1-125-837-11 | CERAMIC CHIP | 1uF | 10% | 6.3V |
| C948 | 1-164-315-11 | CERAMIC CHIP | 470PF | 5% | 50V |
| C949 | 1-125-837-11 | CERAMIC CHIP | 1uF | 10% | 6.3V |
| C950 | 1-162-968-11 | CERAMIC CHIP | 0.0047uF | 10% | 50V |
| C951 | 1-125-837-11 | CERAMIC CHIP | 1uF | 10% | 6.3V |
| C952 | 1-162-968-11 | CERAMIC CHIP | 0.0047uF | 10% | 50V |
| C953 | 1-125-837-11 | CERAMIC CHIP | 1uF | 10% | 6.3V |
| C954 | 1-164-227-11 | CERAMIC CHIP | 0.022uF | 10% | 25V |
| C955 | 1-125-837-11 | CERAMIC CHIP | 1uF | 10% | 6.3V |
| C956 | 1-164-227-11 | CERAMIC CHIP | 0.022uF | 10% | 25V |
| C957 | 1-125-837-11 | CERAMIC CHIP | 1uF | 10% | 6.3V |
| C958 | 1-165-176-11 | CERAMIC CHIP | 0.047uF | 10% | 16V |
| C959 | 1-165-176-11 | CERAMIC CHIP | 0.047uF | 10% | 16V |
| C960 | 1-126-960-11 | ELECT | 1uF | 20% | 50V |
| C961 | 1-126-963-11 | ELECT | 4.7uF | 20% | 50V |
| C966 | 1-100-566-11 | CERAMIC CHIP | 0.1uF | 10% | 25V |
| C984 | 1-100-155-11 | CERAMIC CHIP | 470PF | 5% | 100V |
| | | < CONNECTOR > | | | |
| CN914 | 1-784-739-11 | CONNECTOR, FFC 17P | | | |
| CNS928 | 1-770-401-11 | HOUSING, CONNECTOR (PC BOARD) 8P | | | |
| | | < DIODE > | | | |
| D905 | 8-719-976-99 | DIODE DTZ5.1B | | | |
| | | < VACUUM FLUORESCENT DISPLAY > | | | |
| FL901 | 1-483-081-11 | VACUUM FLUORESCENT DISPLAY | | | |
| | | < IC > | | | |
| IC901 | 6-808-586-01 | IC MB90M407PF-G-146E1 | | | |
| IC902 | 6-600-349-31 | IC NJL24H400A (IR) | | | |
| IC903 | 6-705-678-01 | IC NJM2760V-TE2 | | | |
| | | < JUMPER RESISTOR > | | | |
| JR914 | 1-216-864-11 | SHORT CHIP 0 | | | |
| | | < TRANSISTOR > | | | |
| Q901 | 8-729-620-07 | TRANSISTOR 2SC3052EF-T1-LEF | | | |
| Q902 | 8-729-620-07 | TRANSISTOR 2SC3052EF-T1-LEF | | | |
| Q903 | 8-729-620-07 | TRANSISTOR 2SC3052EF-T1-LEF | | | |
| Q904 | 8-729-920-79 | TRANSISTOR 2SB1132-T100-QR | | | |
| Q905 | 8-729-620-07 | TRANSISTOR 2SC3052EF-T1-LEF | | | |
| Q906 | 8-729-920-79 | TRANSISTOR 2SB1132-T100-QR | | | |

| Ref. No. | Part No. | Description | | | Remark |
|---|---|---|---|---|---|
| | | < RESISTOR > | | | |
| R851 | 1-216-821-11 | METAL CHIP | 1K | 5% | 1/10W |
| R900 | 1-216-833-11 | METAL CHIP | 10K | 5% | 1/10W |
| R901 | 1-216-833-11 | METAL CHIP | 10K | 5% | 1/10W |
| R902 | 1-216-833-11 | METAL CHIP | 10K | 5% | 1/10W |
| R903 | 1-216-809-11 | METAL CHIP | 100 | 5% | 1/10W |
| R904 | 1-216-809-11 | METAL CHIP | 100 | 5% | 1/10W |
| R905 | 1-216-835-11 | METAL CHIP | 15K | 5% | 1/10W |
| R906 | 1-216-835-11 | METAL CHIP | 15K | 5% | 1/10W |
| R907 | 1-216-835-11 | METAL CHIP | 15K | 5% | 1/10W |
| R908 | 1-216-835-11 | METAL CHIP | 15K | 5% | 1/10W |
| R909 | 1-216-835-11 | METAL CHIP | 15K | 5% | 1/10W |
| R910 | 1-216-835-11 | METAL CHIP | 15K | 5% | 1/10W |
| R911 | 1-216-809-11 | METAL CHIP | 100 | 5% | 1/10W |
| R912 | 1-216-833-11 | METAL CHIP | 10K | 5% | 1/10W |
| R913 | 1-216-809-11 | METAL CHIP | 100 | 5% | 1/10W |
| R914 | 1-216-833-11 | METAL CHIP | 10K | 5% | 1/10W |
| R915 | 1-216-809-11 | METAL CHIP | 100 | 5% | 1/10W |
| R916 | 1-216-821-11 | METAL CHIP | 1K | 5% | 1/10W |
| R917 | 1-216-833-11 | METAL CHIP | 10K | 5% | 1/10W |
| R918 | 1-216-821-11 | METAL CHIP | 1K | 5% | 1/10W |
| R919 | 1-216-833-11 | METAL CHIP | 10K | 5% | 1/10W |
| R922 | 1-216-857-11 | METAL CHIP | 1M | 5% | 1/10W |
| R938 | 1-216-845-11 | METAL CHIP | 100K | 5% | 1/10W |
| R939 | 1-216-845-11 | METAL CHIP | 100K | 5% | 1/10W |
| R940 | 1-216-837-11 | METAL CHIP | 22K | 5% | 1/10W |
| R941 | 1-216-809-11 | METAL CHIP | 100 | 5% | 1/10W |
| R942 | 1-216-809-11 | METAL CHIP | 100 | 5% | 1/10W |
| R944 | 1-216-809-11 | METAL CHIP | 100 | 5% | 1/10W |
| R945 | 1-216-842-11 | METAL CHIP | 56K | 5% | 1/10W |
| R946 | 1-216-845-11 | METAL CHIP | 100K | 5% | 1/10W |
| R947 | 1-216-821-11 | METAL CHIP | 1K | 5% | 1/10W |
| R948 | 1-218-867-11 | METAL CHIP | 6.8K | 0.5% | 1/10W |
| R949 | 1-216-821-11 | METAL CHIP | 1K | 5% | 1/10W |
| R950 | 1-216-821-11 | METAL CHIP | 1K | 5% | 1/10W |
| R951 | 1-216-830-11 | METAL CHIP | 5.6K | 5% | 1/10W |
| R952 | 1-216-821-11 | METAL CHIP | 1K | 5% | 1/10W |
| R953 | 1-216-821-11 | METAL CHIP | 1K | 5% | 1/10W |
| R954 | 1-216-833-11 | METAL CHIP | 10K | 5% | 1/10W |
| R955 | 1-216-833-11 | METAL CHIP | 10K | 5% | 1/10W |
| R956 | 1-216-823-11 | METAL CHIP | 1.5K | 5% | 1/10W |
| R957 | 1-216-821-11 | METAL CHIP | 1K | 5% | 1/10W |
| R958 | 1-216-819-11 | METAL CHIP | 680 | 5% | 1/10W |
| R959 | 1-216-817-11 | METAL CHIP | 470 | 5% | 1/10W |
| R983 | 1-216-817-11 | METAL CHIP | 470 | 5% | 1/10W |
| R984 | 1-216-819-11 | METAL CHIP | 680 | 5% | 1/10W |
| R985 | 1-216-821-11 | METAL CHIP | 1K | 5% | 1/10W |
| R986 | 1-216-823-11 | METAL CHIP | 1.5K | 5% | 1/10W |
| R987 | 1-216-823-11 | METAL CHIP | 1.5K | 5% | 1/10W |
| R988 | 1-216-825-11 | METAL CHIP | 2.2K | 5% | 1/10W |
| R989 | 1-216-827-11 | METAL CHIP | 3.3K | 5% | 1/10W |
| R990 | 1-216-817-11 | METAL CHIP | 470 | 5% | 1/10W |
| R993 | 1-216-817-11 | METAL CHIP | 470 | 5% | 1/10W |
| R994 | 1-216-821-11 | METAL CHIP | 1K | 5% | 1/10W |
| R997 | 1-216-817-11 | METAL CHIP | 470 | 5% | 1/10W |
| R998 | 1-216-821-11 | METAL CHIP | 1K | 5% | 1/10W |
| R999 | 1-216-864-11 | SHORT CHIP | 0 | | |
| R1301 | 1-216-821-11 | METAL CHIP | 1K | 5% | 1/10W |
| R1308 | 1-216-821-11 | METAL CHIP | 1K | 5% | 1/10W |
| R1315 | 1-216-821-11 | METAL CHIP | 1K | 5% | 1/10W |

PANEL COM | POWER AMP

| Ref. No. | Part No. | Description | | | Remark |
|---|---|---|---|---|---|
| R1322 | 1-216-821-11 | METAL CHIP | 1K | 5% | 1/10W |
| R1329 | 1-216-821-11 | METAL CHIP | 1K | 5% | 1/10W |
| R1350 | 1-216-837-11 | METAL CHIP | 22K | 5% | 1/10W |
| R1351 | 1-216-821-11 | METAL CHIP | 1K | 5% | 1/10W |
| R1352 | 1-216-829-11 | METAL CHIP | 4.7K | 5% | 1/10W |
| R1354 | 1-216-809-11 | METAL CHIP | 100 | 5% | 1/10W |
| R1377 | 1-216-821-11 | METAL CHIP | 1K | 5% | 1/10W |
| R1378 | 1-216-821-11 | METAL CHIP | 1K | 5% | 1/10W |
| R1383 | 1-216-864-11 | SHORT CHIP | 0 | | |
| R1384 | 1-216-829-11 | METAL CHIP | 4.7K | 5% | 1/10W |
| R1385 | 1-216-829-11 | METAL CHIP | 4.7K | 5% | 1/10W |
| R1386 | 1-216-837-11 | METAL CHIP | 22K | 5% | 1/10W |
| R1387 | 1-216-837-11 | METAL CHIP | 22K | 5% | 1/10W |
| R1388 | 1-216-821-11 | METAL CHIP | 1K | 5% | 1/10W |
| R1389 | 1-216-833-11 | METAL CHIP | 10K | 5% | 1/10W |
| R1390 | 1-216-833-11 | METAL CHIP | 10K | 5% | 1/10W |
| R1391 | 1-216-833-11 | METAL CHIP | 10K | 5% | 1/10W |
| R1392 | 1-216-833-11 | METAL CHIP | 10K | 5% | 1/10W |
| R1393 | 1-216-833-11 | METAL CHIP | 10K | 5% | 1/10W |
| R1394 | 1-216-833-11 | METAL CHIP | 10K | 5% | 1/10W |
| R1395 | 1-216-833-11 | METAL CHIP | 10K | 5% | 1/10W |
| R1396 | 1-216-833-11 | METAL CHIP | 10K | 5% | 1/10W |
| R1397 | 1-216-833-11 | METAL CHIP | 10K | 5% | 1/10W |
| R1398 | 1-216-833-11 | METAL CHIP | 10K | 5% | 1/10W |
| R1399 | 1-216-833-11 | METAL CHIP | 10K | 5% | 1/10W |
| R1400 | 1-216-833-11 | METAL CHIP | 10K | 5% | 1/10W |
| R1401 | 1-216-833-11 | METAL CHIP | 10K | 5% | 1/10W |
| R1402 | 1-216-833-11 | METAL CHIP | 10K | 5% | 1/10W |
| R1403 | 1-216-833-11 | METAL CHIP | 10K | 5% | 1/10W |
| R1404 | 1-216-833-11 | METAL CHIP | 10K | 5% | 1/10W |
| | | < SWITCH > | | | |
| S900 | 1-762-875-21 | SWITCH, KEYBOARD (EFFECT ON/OFF) | | | |
| S901 | 1-762-875-21 | SWITCH, KEYBOARD (SLEEP) | | | |
| S902 | 1-762-875-21 | SWITCH, KEYBOARD (TIMER MENU) | | | |
| S903 | 1-762-875-21 | SWITCH, KEYBOARD (ILLUMINATION) | | | |
| S921 | 1-762-875-21 | SWITCH, KEYBOARD (TUNER/BAND) | | | |
| S922 | 1-762-875-21 | SWITCH, KEYBOARD (TUNING –) | | | |
| S923 | 1-762-875-21 | SWITCH, KEYBOARD (TUNING +) | | | |
| S924 | 1-762-875-21 | SWITCH, KEYBOARD (TUNING MODE) | | | |
| S925 | 1-762-875-21 | SWITCH, KEYBOARD (FM MODE) | | | |
| S926 | 1-762-875-21 | SWITCH, KEYBOARD (AMP MENU) | | | |
| S927 | 1-762-875-21 | SWITCH, KEYBOARD (TUNER MEMORY) | | | |
| S928 | 1-762-875-21 | SWITCH, KEYBOARD (DISPLAY) | | | |
| | | < VIBRATOR > | | | |
| X602 | 1-781-282-51 | VIBRATOR, CERAMIC (4MHz) | | | |

**********

| | | | | | |
|---|---|---|---|---|---|
| | A-1616-816-A | POWER AMP BOARD, COMPLETE (ZX99i) | | | |
| | A-1616-833-A | POWER AMP BOARD, COMPLETE (ZX66i) | | | |
| | | ********** | | | |
| | 7-685-646-79 | SCREW +BVTP 3X8 TYPE2 IT-3 | | | |
| | 7-685-647-79 | SCREW +BVTP 3X10 TYPE2 IT-3 (ZX99i) | | | |
| | | < CAPACITOR > | | | |
| C600 | 1-126-963-11 | ELECT | 4.7uF | 20% | 50V |
| C601 | 1-162-966-11 | CERAMIC CHIP | 0.0022uF | 10% | 50V |
| C602 | 1-104-658-11 | ELECT | 100uF | 20% | 10V |
| C604 | 1-162-953-11 | CERAMIC CHIP | 100PF | 5% | 50V (ZX99i) |
| C604 | 1-162-957-11 | CERAMIC CHIP | 220PF | 5% | 50V (ZX66i) |
| C605 | 1-162-970-11 | CERAMIC CHIP | 0.01uF | 10% | 25V |
| C608 | 1-126-965-11 | ELECT | 22uF | 20% | 50V |
| C609 | 1-128-560-11 | ELECT | 22uF | 20% | 100V |
| C610 | 1-128-560-11 | ELECT | 22uF | 20% | 100V |
| C616 | 1-136-495-11 | FILM | 0.068uF | 5% | 50V |
| C617 | 1-136-495-11 | FILM | 0.068uF | 5% | 50V |
| C627 | 1-126-961-11 | ELECT | 2.2uF | 20% | 50V |
| C628 | 1-126-933-11 | ELECT | 100uF | 20% | 16V |
| C629 | 1-164-156-11 | CERAMIC CHIP | 0.1uF | | 25V |
| C634 | 1-104-665-11 | ELECT | 100uF | 20% | 25V |
| C635 | 1-104-665-11 | ELECT | 100uF | 20% | 25V |
| C648 | 1-104-658-11 | ELECT | 100uF | 20% | 10V |
| C649 | 1-126-964-11 | ELECT | 10uF | 20% | 50V |
| C650 | 1-126-963-11 | ELECT | 4.7uF | 20% | 50V |
| C651 | 1-162-966-11 | CERAMIC CHIP | 0.0022uF | 10% | 50V |
| C652 | 1-104-658-11 | ELECT | 100uF | 20% | 10V |
| C654 | 1-162-953-11 | CERAMIC CHIP | 100PF | 5% | 50V (ZX99i) |
| C654 | 1-162-957-11 | CERAMIC CHIP | 220PF | 5% | 50V (ZX66i) |
| C656 | 1-127-811-11 | ELECT(BLOCK) | 3300uF | 20% | 50V |
| C657 | 1-137-190-11 | FILM | 0.22uF | 5% | 50V |
| C658 | 1-127-815-11 | ELECT(BLOCK) | 3300uF | 20% | 100V |
| C659 | 1-136-497-81 | FILM | 0.1uF | 5% | 50V |
| C662 | 1-126-964-11 | ELECT | 10uF | 20% | 50V |
| C663 | 1-126-968-11 | ELECT | 100uF | 20% | 50V |
| C666 | 1-136-495-11 | FILM | 0.068uF | 5% | 50V |
| C667 | 1-136-495-11 | FILM | 0.068uF | 5% | 50V |
| C676 | 1-127-811-11 | ELECT(BLOCK) | 3300uF | 20% | 50V |
| C677 | 1-127-815-11 | ELECT(BLOCK) | 3300uF | 20% | 100V |
| C678 | 1-137-190-11 | FILM | 0.22uF | 5% | 50V |
| C679 | 1-136-497-81 | FILM | 0.1uF | 5% | 50V |
| C696 | 1-137-190-11 | FILM | 0.22uF | 5% | 50V |
| C697 | 1-137-190-11 | FILM | 0.22uF | 5% | 50V |
| | | < CONNECTOR > | | | |
| CN600 | 1-564-707-11 | PIN, CONNECTOR (SMALL TYPE) 5P (ZX99i) | | | |
| CN601 | 1-778-981-21 | CONNECTOR, BOARD TO BOARD 13P | | | |
| CN602 | 1-778-981-21 | CONNECTOR, BOARD TO BOARD 13P | | | |
| * CN606 | 1-564-511-11 | PLUG, CONNECTOR 8P (ZX99i) | | | |
| | | < DIODE > | | | |
| D611 | 6-501-782-01 | DIODE MAZ8180GMLS0 | | | |
| D612 | 6-501-782-01 | DIODE MAZ8180GMLS0 | | | |
| D620 | 6-501-817-01 | DIODE MA2J1110GLS0 | | | |
| D627 | 6-501-817-01 | DIODE MA2J1110GLS0 | | | |
| D646 | 6-501-817-01 | DIODE MA2J1110GLS0 | | | |
| D654 | 6-500-335-01 | DIODE MC2838-T112-1 | | | |
| D656 | 6-500-360-01 | DIODE D10XB20 | | | |
| D658 | 8-719-073-32 | DIODE D25XB60 | | | |
| D660 | 6-501-817-01 | DIODE MA2J1110GLS0 | | | |
| D661 | 6-501-817-01 | DIODE MA2J1110GLS0 | | | |
| D664 | 6-501-186-01 | DIODE UDZW-TE17-33B | | | |
| D670 | 6-501-817-01 | DIODE MA2J1110GLS0 | | | |
| D700 | 6-500-335-01 | DIODE MC2838-T112-1 (ZX99i) | | | |
| D720 | 6-501-817-01 | DIODE MA2J1110GLS0 | | | |
| D760 | 6-501-817-01 | DIODE MA2J1110GLS0 | | | |

## POWER AMP

| Ref. No. | Part No. | Description | | | | Remark |
|---|---|---|---|---|---|---|
| | | < IC > | | | | |
| IC600 | 6-600-642-01 | IC STK412-150C (ZX66i) | | | | |
| IC601 | 6-600-169-01 | IC STK412-240M-E (ZX99i) | | | | |
| IC627 | 6-703-610-01 | IC RT8H015C-T112-1 | | | | |
| | | < JUMPER RESISTOR > | | | | |
| JR647 | 1-216-864-11 | SHORT CHIP | 0 | | | |
| | | < COIL > | | | | |
| L680 | 1-420-872-52 | COIL, AIR-CORE | | | | |
| L682 | 1-420-872-52 | COIL, AIR-CORE (ZX99i) | | | | |
| L686 | 1-420-872-52 | COIL, AIR-CORE | | | | |
| L688 | 1-420-872-52 | COIL, AIR-CORE (ZX99i) | | | | |
| | | < TRANSISTOR > | | | | |
| Q600 | 8-729-027-23 | TRANSISTOR | DTA114EKA-T146 | | | |
| Q601 | 8-729-027-43 | TRANSISTOR | DTC114EKA-T146 | | | |
| Q604 | 8-729-901-81 | TRANSISTOR | 2SC2412K-T-146-R | | | |
| Q606 | 8-729-821-00 | TRANSISTOR | 2SA1207 | | | |
| Q610 | 8-729-924-99 | TRANSISTOR | 2SC3722K-E | | | |
| Q618 | 8-729-924-99 | TRANSISTOR | 2SC3722K-E | | | |
| Q628 | 8-729-620-07 | TRANSISTOR | 2SC3052EF-T1-LEF | | | |
| Q629 | 8-729-620-07 | TRANSISTOR | 2SC3052EF-T1-LEF | | | |
| Q630 | 8-729-620-07 | TRANSISTOR | 2SC3052EF-T1-LEF | | | |
| Q640 | 8-729-802-80 | TRANSISTOR | 2SC3661 | | | |
| Q641 | 8-729-802-80 | TRANSISTOR | 2SC3661 | | | |
| Q644 | 8-729-901-81 | TRANSISTOR | 2SC2412K-T-146-R | | | |
| Q647 | 8-729-901-81 | TRANSISTOR | 2SC2412K-T-146-R | | | |
| Q664 | 8-729-024-93 | TRANSISTOR | 2SB1565E | | | |
| Q668 | 8-729-924-99 | TRANSISTOR | 2SC3722K-E | | | |
| Q765 | 8-729-901-81 | TRANSISTOR | 2SC2412K-T-146-R | | | |
| | | < RESISTOR > | | | | |
| R600 | 1-216-821-11 | METAL CHIP | 1K | 5% | 1/10W | |
| R601 | 1-216-841-11 | METAL CHIP | 47K | 5% | 1/10W | |
| R602 | 1-216-815-11 | METAL CHIP | 330 | 5% | 1/10W | (ZX99i) |
| R602 | 1-216-818-11 | METAL CHIP | 560 | 5% | 1/10W | (ZX66i) |
| R603 | 1-216-841-11 | METAL CHIP | 47K | 5% | 1/10W | |
| R604 | 1-216-833-11 | METAL CHIP | 10K | 5% | 1/10W | |
| R605 | 1-216-833-11 | METAL CHIP | 10K | 5% | 1/10W | |
| R606 | 1-216-841-11 | METAL CHIP | 47K | 5% | 1/10W | |
| R607 | 1-216-825-11 | METAL CHIP | 2.2K | 5% | 1/10W | |
| R608 | 1-216-845-11 | METAL CHIP | 100K | 5% | 1/10W | |
| R609 | 1-216-843-11 | METAL CHIP | 68K | 5% | 1/10W | |
| R610 | 1-216-843-11 | METAL CHIP | 68K | 5% | 1/10W | |
| R611 | 1-216-839-11 | METAL CHIP | 33K | 5% | 1/10W | |
| ⚠ R612 | 1-245-605-51 | FUSIBLE | 100 | 5% | 1/4W | F |
| ⚠ R613 | 1-215-869-11 | METAL OXIDE | 1K | 5% | 1W | F (ZX99i) |
| ⚠ R613 | 1-215-872-11 | METAL OXIDE | 3.3K | 5% | 1W | F (ZX66i) |
| ⚠ R614 | 1-215-869-11 | METAL OXIDE | 1K | 5% | 1W | F (ZX99i) |
| ⚠ R614 | 1-215-872-11 | METAL OXIDE | 3.3K | 5% | 1W | F (ZX66i) |
| ⚠ R615 | 1-245-605-51 | FUSIBLE | 100 | 5% | 1/4W | F |
| ⚠ R616 | 1-217-637-00 | FUSIBLE | 1 | 5% | 1/4W | F |
| R617 | 1-216-845-11 | METAL CHIP | 100K | 5% | 1/10W | |
| R618 | 1-234-499-21 | ENCAPSULATED COMPONENT 0.22X2 5W | | | | (ZX99i) |
| R618 | 1-234-798-11 | ENCAPSULATED COMPONENT 0.1X2 5W (ZX66i) | | | | |
| R619 | 1-216-821-11 | METAL CHIP | 1K | 5% | 1/10W | |
| R620 | 1-216-835-11 | METAL CHIP | 15K | 5% | 1/10W | (ZX99i) |
| R620 | 1-216-839-11 | METAL CHIP | 33K | 5% | 1/10W | (ZX66i) |
| R621 | 1-216-845-11 | METAL CHIP | 100K | 5% | 1/10W | (ZX66i) |
| R621 | 1-216-847-11 | METAL CHIP | 150K | 5% | 1/10W | (ZX99i) |
| R622 | 1-249-393-11 | CARBON | 10 | 5% | 1/4W | F |
| R623 | 1-216-842-11 | METAL CHIP | 56K | 5% | 1/10W | |
| R624 | 1-216-837-11 | METAL CHIP | 22K | 5% | 1/10W | |
| R625 | 1-216-819-11 | METAL CHIP | 680 | 5% | 1/10W | (ZX66i) |
| R625 | 1-216-823-11 | METAL CHIP | 1.5K | 5% | 1/10W | (ZX99i) |
| R628 | 1-216-841-11 | METAL CHIP | 47K | 5% | 1/10W | |
| R629 | 1-216-818-11 | METAL CHIP | 560 | 5% | 1/10W | |
| R630 | 1-216-845-11 | METAL CHIP | 100K | 5% | 1/10W | |
| R631 | 1-216-845-11 | METAL CHIP | 100K | 5% | 1/10W | |
| R632 | 1-216-854-11 | METAL CHIP | 560K | 5% | 1/10W | |
| R633 | 1-216-841-11 | METAL CHIP | 47K | 5% | 1/10W | |
| R634 | 1-216-825-11 | METAL CHIP | 2.2K | 5% | 1/10W | |
| R635 | 1-216-833-11 | METAL CHIP | 10K | 5% | 1/10W | |
| ⚠ R636 | 1-216-456-00 | METAL OXIDE | 820 | 5% | 2W | F |
| ⚠ R637 | 1-216-456-00 | METAL OXIDE | 820 | 5% | 2W | F |
| R638 | 1-216-845-11 | METAL CHIP | 100K | 5% | 1/10W | |
| R639 | 1-216-845-11 | METAL CHIP | 100K | 5% | 1/10W | |
| R640 | 1-216-833-11 | METAL CHIP | 10K | 5% | 1/10W | |
| R641 | 1-216-833-11 | METAL CHIP | 10K | 5% | 1/10W | |
| R642 | 1-216-806-11 | METAL CHIP | 56 | 5% | 1/10W | |
| R643 | 1-216-806-11 | METAL CHIP | 56 | 5% | 1/10W | |
| R644 | 1-216-825-11 | METAL CHIP | 2.2K | 5% | 1/10W | |
| ⚠ R646 | 1-215-863-11 | METAL OXIDE | 100 | 5% | 1W | F |
| R647 | 1-216-823-11 | METAL CHIP | 1.5K | 5% | 1/10W | |
| R649 | 1-216-841-11 | METAL CHIP | 47K | 5% | 1/10W | |
| R650 | 1-216-821-11 | METAL CHIP | 1K | 5% | 1/10W | |
| R651 | 1-216-841-11 | METAL CHIP | 47K | 5% | 1/10W | |
| R652 | 1-216-815-11 | METAL CHIP | 330 | 5% | 1/10W | (ZX99i) |
| R652 | 1-216-818-11 | METAL CHIP | 560 | 5% | 1/10W | (ZX66i) |
| R653 | 1-216-841-11 | METAL CHIP | 47K | 5% | 1/10W | |
| R654 | 1-216-841-11 | METAL CHIP | 47K | 5% | 1/10W | |
| R655 | 1-216-841-11 | METAL CHIP | 47K | 5% | 1/10W | |
| R658 | 1-216-849-11 | METAL CHIP | 220K | 5% | 1/10W | |
| R659 | 1-216-849-11 | METAL CHIP | 220K | 5% | 1/10W | |
| R660 | 1-216-837-11 | METAL CHIP | 22K | 5% | 1/10W | |
| R661 | 1-216-837-11 | METAL CHIP | 22K | 5% | 1/10W | |
| R662 | 1-216-832-11 | METAL CHIP | 8.2K | 5% | 1/10W | |
| R663 | 1-216-832-11 | METAL CHIP | 8.2K | 5% | 1/10W | |
| R664 | 1-216-821-11 | METAL CHIP | 1K | 5% | 1/10W | |
| R665 | 1-216-827-11 | METAL CHIP | 3.3K | 5% | 1/10W | (ZX99i) |
| R665 | 1-216-864-11 | SHORT CHIP | 0 (ZX66i) | | | |
| R666 | 1-216-809-11 | METAL CHIP | 100 | 5% | 1/10W | |
| R668 | 1-234-499-21 | ENCAPSULATED COMPONENT 0.22X2 5W | | | | (ZX99i) |
| R668 | 1-234-798-11 | ENCAPSULATED COMPONENT 0.1X2 5W (ZX66i) | | | | |
| R669 | 1-216-821-11 | METAL CHIP | 1K | 5% | 1/10W | |

POWER AMP | POWER SW | RIGHT-BTTN | SE-130

| Ref. No. | Part No. | Description | | | Remark |
|---|---|---|---|---|---|
| R670 | 1-216-835-11 | METAL CHIP | 15K | 5% | 1/10W (ZX99i) |
| R670 | 1-216-839-11 | METAL CHIP | 33K | 5% | 1/10W (ZX66i) |
| R671 | 1-216-845-11 | METAL CHIP | 100K | 5% | 1/10W (ZX66i) |
| R671 | 1-216-847-11 | METAL CHIP | 150K | 5% | 1/10W (ZX99i) |
| R672 | 1-249-393-11 | CARBON | 10 | 5% | 1/4W F |
| R673 | 1-216-843-11 | METAL CHIP | 68K | 5% | 1/10W |
| R674 | 1-216-837-11 | METAL CHIP | 22K | 5% | 1/10W |
| R678 | 1-216-849-11 | METAL CHIP | 220K | 5% | 1/10W |
| R679 | 1-216-849-11 | METAL CHIP | 220K | 5% | 1/10W |
| R682 | 1-216-797-11 | METAL CHIP | 10 | 5% | 1/10W (ZX99i) |
| R686 | 1-216-797-11 | METAL CHIP | 10 | 5% | 1/10W |
| R688 | 1-216-797-11 | METAL CHIP | 10 | 5% | 1/10W (ZX99i) |
| R690 | 1-216-841-11 | METAL CHIP | 47K | 5% | 1/10W |
| R691 | 1-216-845-11 | METAL CHIP | 100K | 5% | 1/10W |
| R692 | 1-216-845-11 | METAL CHIP | 100K | 5% | 1/10W |
| R693 | 1-216-825-11 | METAL CHIP | 2.2K | 5% | 1/10W |
| R694 | 1-216-843-11 | METAL CHIP | 68K | 5% | 1/10W |
| R695 | 1-216-841-11 | METAL CHIP | 47K | 5% | 1/10W |
| R696 | 1-216-841-11 | METAL CHIP | 47K | 5% | 1/10W |
| R697 | 1-216-841-11 | METAL CHIP | 47K | 5% | 1/10W |
| R698 | 1-216-845-11 | METAL CHIP | 100K | 5% | 1/10W |
| R699 | 1-216-845-11 | METAL CHIP | 100K | 5% | 1/10W |
| R700 | 1-216-841-11 | METAL CHIP | 47K | 5% | 1/10W (ZX99i) |
| R701 | 1-216-841-11 | METAL CHIP | 47K | 5% | 1/10W (ZX99i) |
| R702 | 1-216-841-11 | METAL CHIP | 47K | 5% | 1/10W |
| R780 | 1-216-797-11 | METAL CHIP | 10 | 5% | 1/10W |
| | | < RELAY > | | | |
| RY646 | 1-755-308-21 | RELAY | | | |
| | | < THERMISTOR > | | | |
| TH629 | 1-804-045-11 | THERMISTOR | | | |
| | | < TERMINAL BOARD > | | | |
| TM607 | 1-816-048-11 | TERMINAL BOARD (4P) (SPEAKER) (ZX66i) | | | |
| TM607 | 1-816-048-11 | TERMINAL BOARD (4P) (SPEAKER SURROUND (SPEAKER B) R, FRONT (SPEAKER A) R) (ZX99i) | | | |
| TM609 | 1-816-048-11 | TERMINAL BOARD (4P) (SPEAKER SURROUND (SPEAKER B) L, FRONT (SPEAKER A) L) (ZX99i) | | | |

**********

| Ref. No. | Part No. | Description | | | Remark |
|---|---|---|---|---|---|
| | | POWER SW BOARD | | | |
| | | ********** | | | |
| | | < DIODE > | | | |
| D920 | 8-719-053-43 | LED SLR-325VCT31 (I / ⏻) | | | |
| | | < RESISTOR > | | | |
| R1338 | 1-216-815-11 | METAL CHIP | 330 | 5% | 1/10W |
| R1341 | 1-216-809-11 | METAL CHIP | 100 | 5% | 1/10W |
| | | < SWITCH > | | | |
| S929 | 1-762-875-21 | SWITCH, KEYBOARD (I / ⏻) | | | |

**********

| Ref. No. | Part No. | Description | | | Remark |
|---|---|---|---|---|---|
| | | RIGHT-BTTN BOARD | | | |
| | | ********** | | | |
| | | < RESISTOR > | | | |
| R848 | 1-216-825-11 | METAL CHIP | 2.2K | 5% | 1/10W |
| R852 | 1-216-823-11 | METAL CHIP | 1.5K | 5% | 1/10W |
| R855 | 1-216-823-11 | METAL CHIP | 1.5K | 5% | 1/10W |
| R858 | 1-216-821-11 | METAL CHIP | 1K | 5% | 1/10W |
| R861 | 1-216-819-11 | METAL CHIP | 680 | 5% | 1/10W |
| R864 | 1-216-817-11 | METAL CHIP | 470 | 5% | 1/10W |
| R868 | 1-216-833-11 | METAL CHIP | 10K | 5% | 1/10W |
| R869 | 1-218-867-11 | METAL CHIP | 6.8K | 0.5% | 1/10W |
| R870 | 1-216-829-11 | METAL CHIP | 4.7K | 5% | 1/10W |
| | | < SWITCH > | | | |
| S940 | 1-762-875-21 | SWITCH, KEYBOARD (⏮) | | | |
| S941 | 1-762-875-21 | SWITCH, KEYBOARD (GAME) | | | |
| S942 | 1-762-875-21 | SWITCH, KEYBOARD (GAME MIXING) | | | |
| S943 | 1-762-875-21 | SWITCH, KEYBOARD (⏭) | | | |
| S944 | 1-762-875-21 | SWITCH, KEYBOARD (▶▶) | | | |
| S945 | 1-762-875-21 | SWITCH, KEYBOARD (◀◀) | | | |
| S947 | 1-762-875-21 | SWITCH, KEYBOARD (▶ ❚❚) | | | |
| S948 | 1-762-875-21 | SWITCH, KEYBOARD (iPod) | | | |
| S949 | 1-762-875-21 | SWITCH, KEYBOARD (PHONO) | | | |

**********

| Ref. No. | Part No. | Description | | | Remark |
|---|---|---|---|---|---|
| | A-6060-642-A | SE-130 BOARD, COMPLETE | | | |
| | | ********** | | | |
| | | < CONNECTOR > | | | |
| CN101 | 1-750-243-11 | SOCKET, CONNECTOR 6P | | | |
| CN102 | 1-573-383-11 | PIN, CONNECTOR (PC BOARD) 2P | | | |
| | | < PHOTO SENSOR > | | | |
| PH101 | 8-749-017-45 | PHOTO SENSOR RPR-220C1N | | | |
| | | < IC > | | | |
| PH102 | 6-600-072-01 | IC RPI-392 | | | |

**********

| Ref. No. | Part No. | Description | | | | Remark |
|---|---|---|---|---|---|---|
| | | SUBTRANS BOARD | | | | |
| | | ********** | | | | |
| | | < CAPACITOR > | | | | |
| C1052 | 1-126-942-61 | ELECT | 1000uF | 20% | 25V | |
| | | < CONNECTOR > | | | | |
| CN1000 | 1-785-329-11 | PIN, CONNECTOR (LIGHT ANGLE) 3P | | | | |
| CN1115 | 1-564-321-00 | PIN, CONNECTOR (3.96mm PITCH) 2P | | | | |
| CN1116 | 1-564-321-00 | PIN, CONNECTOR (3.96mm PITCH) 2P | | | | |
| | | < DIODE > | | | | |
| D1000 | 6-501-817-01 | DIODE MA2J1110GLS0 | | | | |
| D1001 | 6-500-848-01 | DIODE MC2840-T112-1 | | | | |
| D1002 | 6-500-848-01 | DIODE MC2840-T112-1 | | | | |
| | | < TRANSFORMER > | | | | |
| ⚠ PT1101 | 1-445-514-11 | TRANSFORMER, POWER (SUB) | | | | |
| | | < TRANSISTOR > | | | | |
| Q1000 | 8-729-620-07 | TRANSISTOR 2SC3052EF-T1-LEF | | | | |
| | | < RESISTOR > | | | | |
| R1000 | 1-216-829-11 | METAL CHIP | 4.7K | 5% | 1/10W | |
| R1050 | 1-216-801-11 | METAL CHIP | 22 | 5% | 1/10W | |
| R1051 | 1-216-864-11 | SHORT CHIP | 0 | | | |
| | | < RELAY > | | | | |
| ⚠ RY1000 | 1-755-334-11 | RELAY, AC POWER | | | | |

**********

| Ref. No. | Part No. | Description | | | | Remark |
|---|---|---|---|---|---|---|
| | | SURROUND BOARD (ZX99i) | | | | |
| | | ********** | | | | |
| | | < CAPACITOR > | | | | |
| C700 | 1-126-963-11 | ELECT | 4.7uF | 20% | 50V | |
| C701 | 1-162-966-11 | CERAMIC CHIP | 0.0022uF | 10% | 50V | |
| C702 | 1-104-658-11 | ELECT | 100uF | 20% | 10V | |
| C703 | 1-162-953-11 | CERAMIC CHIP | 100PF | 5% | 50V | |
| C721 | 1-126-965-11 | ELECT | 22uF | 20% | 50V | |
| C730 | 1-136-495-11 | FILM | 0.068uF | 5% | 50V | |
| C731 | 1-136-495-11 | FILM | 0.068uF | 5% | 50V | |
| C750 | 1-126-963-11 | ELECT | 4.7uF | 20% | 50V | |
| C751 | 1-162-966-11 | CERAMIC CHIP | 0.0022uF | 10% | 50V | |
| C752 | 1-104-658-11 | ELECT | 100uF | 20% | 10V | |
| C753 | 1-162-953-11 | CERAMIC CHIP | 100PF | 5% | 50V | |
| C780 | 1-136-495-11 | FILM | 0.068uF | 5% | 50V | |
| C781 | 1-136-495-11 | FILM | 0.068uF | 5% | 50V | |
| C795 | 1-128-560-11 | ELECT | 22uF | 20% | 100V | |
| C796 | 1-128-560-11 | ELECT | 22uF | 20% | 100V | |
| | | < DIODE > | | | | |
| D720 | 6-501-817-01 | DIODE MA2J1110GLS0 | | | | |
| D730 | 6-501-817-01 | DIODE MA2J1110GLS0 | | | | |
| D760 | 6-501-817-01 | DIODE MA2J1110GLS0 | | | | |
| D761 | 6-501-817-01 | DIODE MA2J1110GLS0 | | | | |
| D780 | 6-501-817-01 | DIODE MA2J1110GLS0 | | | | |
| D790 | 6-501-782-01 | DIODE MAZ8180GMLS0 | | | | |
| D791 | 6-501-782-01 | DIODE MAZ8180GMLS0 | | | | |

| Ref. No. | Part No. | Description | | | | Remark |
|---|---|---|---|---|---|---|
| | | < IC > | | | | |
| IC701 | 6-600-169-01 | IC STK412-240M-E | | | | |
| | | < TRANSISTOR > | | | | |
| Q720 | 8-729-620-07 | TRANSISTOR 2SC3052EF-T1-LEF | | | | |
| Q721 | 8-729-821-00 | TRANSISTOR 2SA1207 | | | | |
| Q722 | 8-729-924-99 | TRANSISTOR 2SC3722K-E | | | | |
| Q730 | 8-729-924-99 | TRANSISTOR 2SC3722K-E | | | | |
| Q762 | 8-729-620-07 | TRANSISTOR 2SC3052EF-T1-LEF | | | | |
| Q765 | 8-729-620-07 | TRANSISTOR 2SC3052EF-T1-LEF | | | | |
| Q780 | 8-729-924-99 | TRANSISTOR 2SC3722K-E | | | | |
| | | < RESISTOR > | | | | |
| R700 | 1-216-821-11 | METAL CHIP | 1K | 5% | 1/10W | |
| R701 | 1-216-841-11 | METAL CHIP | 47K | 5% | 1/10W | |
| R702 | 1-216-815-11 | METAL CHIP | 330 | 5% | 1/10W | |
| ⚠ R703 | 1-215-863-11 | METAL OXIDE | 100 | 5% | 1W | F |
| R710 | 1-216-841-11 | METAL CHIP | 47K | 5% | 1/10W | |
| R711 | 1-216-841-11 | METAL CHIP | 47K | 5% | 1/10W | |
| R720 | 1-216-833-11 | METAL CHIP | 10K | 5% | 1/10W | |
| R721 | 1-216-833-11 | METAL CHIP | 10K | 5% | 1/10W | |
| R722 | 1-216-841-11 | METAL CHIP | 47K | 5% | 1/10W | |
| R723 | 1-216-825-11 | METAL CHIP | 2.2K | 5% | 1/10W | |
| R724 | 1-216-845-11 | METAL CHIP | 100K | 5% | 1/10W | |
| R725 | 1-216-843-11 | METAL CHIP | 68K | 5% | 1/10W | |
| R726 | 1-216-843-11 | METAL CHIP | 68K | 5% | 1/10W | |
| R727 | 1-216-839-11 | METAL CHIP | 33K | 5% | 1/10W | |
| R728 | 1-216-841-11 | METAL CHIP | 47K | 5% | 1/10W | |
| R729 | 1-216-845-11 | METAL CHIP | 100K | 5% | 1/10W | |
| R730 | 1-234-499-21 | ENCAPSULATED COMPONENT 0.22X2 5W | | | | |
| R731 | 1-216-821-11 | METAL CHIP | 1K | 5% | 1/10W | |
| R732 | 1-216-837-11 | METAL CHIP | 22K | 5% | 1/10W | |
| R733 | 1-216-847-11 | METAL CHIP | 150K | 5% | 1/10W | |
| R734 | 1-216-842-11 | METAL CHIP | 56K | 5% | 1/10W | |
| ⚠ R735 | 1-245-711-31 | CARBON | 10 | 5% | 1/2W | F |
| R736 | 1-216-843-11 | METAL CHIP | 68K | 5% | 1/10W | |
| R737 | 1-216-845-11 | METAL CHIP | 100K | 5% | 1/10W | |
| R750 | 1-216-821-11 | METAL CHIP | 1K | 5% | 1/10W | |
| R751 | 1-216-841-11 | METAL CHIP | 47K | 5% | 1/10W | |
| R752 | 1-216-815-11 | METAL CHIP | 330 | 5% | 1/10W | |
| R766 | 1-216-825-11 | METAL CHIP | 2.2K | 5% | 1/10W | |
| R780 | 1-234-499-21 | ENCAPSULATED COMPONENT 0.22X2 5W | | | | |
| R781 | 1-216-821-11 | METAL CHIP | 1K | 5% | 1/10W | |
| R782 | 1-216-837-11 | METAL CHIP | 22K | 5% | 1/10W | |
| R783 | 1-216-847-11 | METAL CHIP | 150K | 5% | 1/10W | |
| R784 | 1-216-843-11 | METAL CHIP | 68K | 5% | 1/10W | |
| ⚠ R785 | 1-245-711-31 | CARBON | 10 | 5% | 1/2W | F |
| R788 | 1-216-823-11 | METAL CHIP | 1.5K | 5% | 1/10W | |
| R792 | 1-216-845-11 | METAL CHIP | 100K | 5% | 1/10W | |
| ⚠ R793 | 1-217-637-00 | FUSIBLE | 1 | 5% | 1/4W | F |
| ⚠ R794 | 1-245-605-51 | FUSIBLE | 100 | 5% | 1/4W | F |
| ⚠ R795 | 1-245-605-51 | FUSIBLE | 100 | 5% | 1/4W | F |
| R796 | 1-216-821-11 | METAL CHIP | 1K | 5% | 1/10W | |
| R797 | 1-216-821-11 | METAL CHIP | 1K | 5% | 1/10W | |
| R798 | 1-216-845-11 | METAL CHIP | 100K | 5% | 1/10W | |
| R799 | 1-216-845-11 | METAL CHIP | 100K | 5% | 1/10W | |

SURROUND TRANS VOL

| Ref. No. | Part No. | Description | | | | Remark |
|---|---|---|---|---|---|---|
| | | < RELAY > | | | | |
| RY760 | 1-755-308-21 | RELAY | | | | |
| ********** | | | | | | |
| | | TRANS BOARD | | | | |
| | | ********** | | | | |
| | 1-533-217-41 | HOLDER, FUSE | | | | |
| | | < CAPACITOR > | | | | |
| C1192 | 1-128-576-11 | ELECT | 100uF | 20% | 63V | |
| | | < CONNECTOR > | | | | |
| * CN1112 | 1-564-521-11 | PLUG, CONNECTOR 6P | | | | |
| * CN1113 | 1-564-522-11 | PLUG, CONNECTOR 7P | | | | |
| | | < DIODE > | | | | |
| D1192 | 6-500-522-21 | DIODE 10EDB40-TB3 | | | | |
| | | < RESISTOR > | | | | |
| ⚠ R1201 | 1-219-124-11 | FUSIBLE | 0.68 | 5% | 1/4W | F |
| ********** | | | | | | |
| | | VOL BOARD | | | | |
| | | ********** | | | | |
| | | < CAPACITOR > | | | | |
| C967 | 1-107-826-11 | CERAMIC CHIP | 0.1uF | 10% | 16V | |
| C968 | 1-107-826-11 | CERAMIC CHIP | 0.1uF | 10% | 16V | |
| C969 | 1-107-826-11 | CERAMIC CHIP | 0.1uF | 10% | 16V | |
| C971 | 1-107-826-11 | CERAMIC CHIP | 0.1uF | 10% | 16V | |
| C972 | 1-107-826-11 | CERAMIC CHIP | 0.1uF | 10% | 16V | |
| | | < CONNECTOR > | | | | |
| CN928 | 1-785-328-11 | PIN, CONNECTOR (LIGHT ANGLE) 2P | | | | |
| | | < DIODE > | | | | |
| D907 | 6-500-424-01 | LED SLI-325DCT31W (VOLUME ILLUMINATION 1) | | | | |
| D908 | 6-500-424-01 | LED SLI-325DCT31W (VOLUME ILLUMINATION 2) | | | | |
| D909 | 6-500-424-01 | LED SLI-325DCT31W (VOLUME ILLUMINATION 3) | | | | |
| D910 | 6-500-424-01 | LED SLI-325DCT31W (VOLUME ILLUMINATION 4) | | | | |
| D911 | 6-500-424-01 | LED SLI-325DCT31W (VOLUME ILLUMINATION 5) | | | | |
| D912 | 6-500-424-01 | LED SLI-325DCT31W (VOLUME ILLUMINATION 6) | | | | |
| D913 | 6-500-424-01 | LED SLI-325DCT31W (VOLUME ILLUMINATION 7) | | | | |
| D914 | 6-500-424-01 | LED SLI-325DCT31W (VOLUME ILLUMINATION 8) | | | | |
| D915 | 6-500-424-01 | LED SLI-325DCT31W (VOLUME ILLUMINATION 9) | | | | |
| D916 | 6-500-424-01 | LED SLI-325DCT31W (VOLUME ILLUMINATION 10) | | | | |
| D917 | 6-500-424-01 | LED SLI-325DCT31W (VOLUME ILLUMINATION 11) | | | | |

| Ref. No. | Part No. | Description | | | | Remark |
|---|---|---|---|---|---|---|
| | | < TRANSISTOR > | | | | |
| Q911 | 8-729-620-07 | TRANSISTOR 2SC3052EF-T1-LEF | | | | |
| Q912 | 8-729-620-07 | TRANSISTOR 2SC3052EF-T1-LEF | | | | |
| Q913 | 8-729-620-07 | TRANSISTOR 2SC3052EF-T1-LEF | | | | |
| Q914 | 8-729-620-07 | TRANSISTOR 2SC3052EF-T1-LEF | | | | |
| Q915 | 8-729-620-07 | TRANSISTOR 2SC3052EF-T1-LEF | | | | |
| Q916 | 8-729-620-07 | TRANSISTOR 2SC3052EF-T1-LEF | | | | |
| | | < RESISTOR > | | | | |
| R960 | 1-218-867-11 | METAL CHIP | 6.8K | 0.5% | 1/10W | |
| R961 | 1-216-829-11 | METAL CHIP | 4.7K | 5% | 1/10W | |
| R962 | 1-216-827-11 | METAL CHIP | 3.3K | 5% | 1/10W | |
| R963 | 1-216-825-11 | METAL CHIP | 2.2K | 5% | 1/10W | |
| R964 | 1-216-823-11 | METAL CHIP | 1.5K | 5% | 1/10W | |
| R965 | 1-216-823-11 | METAL CHIP | 1.5K | 5% | 1/10W | |
| R966 | 1-216-821-11 | METAL CHIP | 1K | 5% | 1/10W | |
| R967 | 1-216-819-11 | METAL CHIP | 680 | 5% | 1/10W | |
| R968 | 1-216-817-11 | METAL CHIP | 470 | 5% | 1/10W | |
| R969 | 1-216-817-11 | METAL CHIP | 470 | 5% | 1/10W | |
| R970 | 1-216-819-11 | METAL CHIP | 680 | 5% | 1/10W | |
| R971 | 1-216-821-11 | METAL CHIP | 1K | 5% | 1/10W | |
| R972 | 1-216-823-11 | METAL CHIP | 1.5K | 5% | 1/10W | |
| R973 | 1-216-823-11 | METAL CHIP | 1.5K | 5% | 1/10W | |
| R974 | 1-216-825-11 | METAL CHIP | 2.2K | 5% | 1/10W | |
| R975 | 1-216-827-11 | METAL CHIP | 3.3K | 5% | 1/10W | |
| R1300 | 1-216-821-11 | METAL CHIP | 1K | 5% | 1/10W | |
| R1302 | 1-216-821-11 | METAL CHIP | 1K | 5% | 1/10W | |
| R1303 | 1-216-821-11 | METAL CHIP | 1K | 5% | 1/10W | |
| R1306 | 1-216-821-11 | METAL CHIP | 1K | 5% | 1/10W | |
| R1309 | 1-216-821-11 | METAL CHIP | 1K | 5% | 1/10W | |
| R1310 | 1-216-821-11 | METAL CHIP | 1K | 5% | 1/10W | |
| R1313 | 1-216-821-11 | METAL CHIP | 1K | 5% | 1/10W | |
| R1316 | 1-216-821-11 | METAL CHIP | 1K | 5% | 1/10W | |
| R1317 | 1-216-821-11 | METAL CHIP | 1K | 5% | 1/10W | |
| R1320 | 1-216-821-11 | METAL CHIP | 1K | 5% | 1/10W | |
| R1323 | 1-216-821-11 | METAL CHIP | 1K | 5% | 1/10W | |
| R1324 | 1-216-821-11 | METAL CHIP | 1K | 5% | 1/10W | |
| R1327 | 1-216-821-11 | METAL CHIP | 1K | 5% | 1/10W | |
| R1330 | 1-216-821-11 | METAL CHIP | 1K | 5% | 1/10W | |
| R1331 | 1-216-821-11 | METAL CHIP | 1K | 5% | 1/10W | |
| R1335 | 1-216-821-11 | METAL CHIP | 1K | 5% | 1/10W | |
| R1336 | 1-216-821-11 | METAL CHIP | 1K | 5% | 1/10W | |
| R1337 | 1-216-821-11 | METAL CHIP | 1K | 5% | 1/10W | |
| | | < SWITCH > | | | | |
| S904 | 1-762-875-21 | SWITCH, KEYBOARD (SALSA) | | | | |
| S905 | 1-762-875-21 | SWITCH, KEYBOARD (REGGAE) | | | | |
| S906 | 1-762-875-21 | SWITCH, KEYBOARD (POP) | | | | |
| S907 | 1-762-875-21 | SWITCH, KEYBOARD (SAMBA) | | | | |
| S908 | 1-762-875-21 | SWITCH, KEYBOARD (TANGO) | | | | |
| S909 | 1-762-875-21 | SWITCH, KEYBOARD (SURROUND) | | | | |
| S910 | 1-762-875-21 | SWITCH, KEYBOARD (USER EQ) | | | | |
| S911 | 1-762-875-21 | SWITCH, KEYBOARD (X-GROOVE) | | | | |
| S913 | 1-762-875-21 | SWITCH, KEYBOARD (ROCK) | | | | |
| S914 | 1-762-875-21 | SWITCH, KEYBOARD (JAZZ) | | | | |
| S915 | 1-762-875-21 | SWITCH, KEYBOARD (DANCE) | | | | |
| S916 | 1-762-875-21 | SWITCH, KEYBOARD (MOVIE) | | | | |
| S917 | 1-762-875-21 | SWITCH, KEYBOARD (GAME) | | | | |
| S918 | 1-762-875-21 | SWITCH, KEYBOARD (TOOL MENU) | | | | |
| S919 | 1-762-875-21 | SWITCH, KEYBOARD (RETURN) | | | | |

| Ref. No. | Part No. | Description | Remark |
|---|---|---|---|
| S980 | 1-487-171-11 | ENCODER, ROTARY (VOLUME +/–) | |

**********

MISCELLANEOUS
**********

| | | | |
|---|---|---|---|
| 5 | 1-828-964-11 | WIRE (FLAT TYPE) (11 CORE) | |
| 56 | 1-828-996-51 | WIRE (FLAT TYPE) (17 CORE) | |
| ⚠ 155 | 1-783-820-11 | CORD, POWER | |
| 207 | 1-823-921-11 | FMS-18 | |
| ⚠ 265 | 8-820-244-02 | OPTICAL PICK-UP (KSM-215DCP/C2NP) | |
| 272 | 1-832-404-21 | CABLE, FLEXIBLE FLAT (16 CORE) | |
| 273 | 1-452-925-21 | MAGNET ASSY | |
| 276 | 1-828-664-11 | WIRE (FLAT TYPE) (27 CORE) | |
| ⚠ F1141 | 1-533-949-33 | FUSE, CYLINDRICAL (TIME LAG) (T8AL/250V) | |
| ⚠ F1151 | 1-533-949-33 | FUSE, CYLINDRICAL (TIME LAG) (T8AL/250V) | |
| ⚠ F1161 | 1-533-949-33 | FUSE, CYLINDRICAL (TIME LAG) (T8AL/250V) | |
| ⚠ F1171 | 1-533-949-33 | FUSE, CYLINDRICAL (TIME LAG) (T8AL/250V) | |
| ⚠ F1181 | 1-532-504-33 | FUSE (T4AL/250V) | |
| ⚠ F1191 | 1-532-504-33 | FUSE (T4AL/250V) | |
| FAN901 | 1-763-372-11 | FAN, DC | |
| ⚠ FC901 | 1-500-497-11 | FILTER, CLAMP (FERRITE CORE) | |
| M901 | X-3952-411-1 | MOTOR ASSY, LOADING (LOADING) | |
| ⚠ PT1100 | 1-445-589-11 | TRANSFORMER, POWER (MAIN) (ZX66i) | |
| ⚠ PT1100 | 1-445-590-11 | TRANSFORMER, POWER (MAIN) (ZX99i) | |
| RE901 | 1-418-746-11 | ENCODER, ROTARY | |
| S101 | 1-771-853-11 | SWITCH, DETECTION (LIMIT) | |
| TU901 | 1-693-762-21 | TUNER (FM/AM) (ANTENNA) | |

## REVISION HISTORY

Checking the version allows you to jump to the revised page.
Also, clicking the version at the top of the revised page allows you to jump to the next revised page.

| Ver. | Date | Description of Revision |
|---|---|---|
| 1.0 | 2009.02 | New |