120W Mini Hi-Fi System **FWM210/55/78/12**

FWM211X/77/FWM210X/77

Service
Service
Service

Service Manual

CONTENTS

Technical specification .....1-2..1-4

Version Variation.....2-1
Disassembly diagram..... 2-2

Block diagram.....3-1
Wiring diagram 3-2

MAIN board
Circuit diagram .....4-1..4-2
Layout diagram.....4-3 4-4

Dispaly board
Circuit diagram 5-1
Layout diagram.....5-2..5-3

POWER,AMP board
Circuit diagram 6-1
Layout diagram.....6-2 6-3

Exploded view diagram 7-1

CLASS 1 LASER PRODUCT

© Copyright 2011 Philips Consumer Electronics B.V. Eindhoven, The Netherlands
All rights reserved. No part of this publication may be reproduced, stored in a retrieval system or transmitted, in any form or by any means, electronic, mechanical, photocopying, or otherwise without the prior permission of Philips.

Published by LZ1115 Service Audio Subject to modification

3141 785 36150

Version 1.3

PHILIPS

GENERAL DESCRIPTION
MP3-USB Mini Hi Fi System with Digital PLL Tuner , CD-MP3, 50 W *2 /per channel Universal Class D Power Amplifier
Aux In,mp3 paly in , Remote Control

LIFETIME : 7 Years

Class	Tuner	Supply + Amplifier	Loudspeaker Boxes	USB	Clock	CD / MP3
I			X			
II	X	X			X	X
III						
Page	8	4,5	4	9	6	7

SAFETY requirements

Version	Safety	EMC
55	EN 60065	
78	EN 60065	

RADIATION / IMMUNITY requirments (EMC)

CLIMATIC requirements
ALL climates : + 5 Dregree till + 35 Degree
MODERATE climates : + N.A till N.A Degree

PERFORMANCE CLASSES

POWER SUPPLY

MAINS (A.C.)	127/230 Vac	127/230 Vac	127/230 Vac		
Version	/55	/78	/77		
Voltage Selection	YES	YES	YES		
Frequency	60/50Hz	60/50Hz	60/50Hz		

POWER CONSUMER

	FWM210/55	FWM210/78	FWM210/77	
Stadby :	< = 8W	< = 8W	< = 8W	
(DEMO mode " OFF ") , NOM. A, INPUT				
Maximum :	/	/	/	
@ 1/8 Prated , NOM. A, INPUT	?W (264V)	?W (264V)	?W (264V)	
ECO Power mode :	/	/	/	

Q and R according to Product Division Rules
Quality : 0.4 % (Major) 1.5 % (Mirror)
Reliability : 2.0 % (C 42)
Tested according to General Test Instruction refer to PHILIPS standary (UAN -D1591)
Measured according to PHILIPS standary (UAN - L1059) unless other wise stated
All not mentioned date, please refer to PHILIPS standary (XUW - 0010 - jun 2001)

DERIVED	REMARKS	APPROBATION

Remarks
* 55/78/77 power out W * /per channel

TECHNIAL DESCRIPTION

Total power 100W, matching SPEAKER of 50W x 2 channel 4 ohm load.

GENERAL PART
OUTPUT stage Protection : Yes Temperature : YES Shorcircuit : Yes
LoudSpeaker D.C. Protection : Yes.

INDICATORS
Standby Mode Indicator : LCD display Clock active
ECO Mode Indiicator : LCD turns off, ECO - Standby LED turn on (Only for 12/05/37)

ELECTRICAL DATA

DSC :	Rock, Jazz, Optimal, Techno	Channel Differencer at -46dB	3	dB
DBB	OFF	Hum (Volume Minimun -)	< 0.5	µW
SIS :	N/A	Residual Noise (Volume Minium)	<0.25	µW
VAC :	N/A	Channel Separation (at 1 kHz)	≥ 35	dB
WOOX :	N/A	Signal / Noise (weighted)	≥ 55	dB

INTERCONNECTS

Input Sensitity(±2 dB)rated ouput power at 1 kHz and 10kHz. Line Output Voltage (*1)

Tuner	:	FM MODE 75KZH -CD 6dB	Line Out (Left / Right)	N.A
CD	:	0 dB track (Audio Disc 1, Trk 35)	Subwoofer Out	N.A
USB	:	0 dB track (1K 0dB)	Headphone	700mV, RL = 32Ω
AUX	:	Nor:2000mV	Digital Coaxial Out	N.A
TAPE	:	NC	Booster Out	N.A
mp3 in	:	Nor:500mV Lim: 350mV ~ 800mV	Digital Coaxial Out	N.A

OUTPUT POWER (* 1ch) At THD = 10% (Measured with 20Hz-22KHz filter),

Power output (RMS)	2 channel	50W*2 Measure 1ch

Rated Impedance :4 ohm

Remarks

(*1) Electrical parameters are to be measuremend at specker terminals across 4 Ohm load (pure resistor)
with rated input signal in AUX mode; DSC OFF mode with DBB OFF
IS off unless specified otherwise

AUDIO SIGNAL PROCESSING

Micro Hi-Fi System with PLL Tuner ,USB, CD-MP3, 50W*2 channel (1speaker load) Class D Digital Power Amplifier

1) DSC (Digital Sound Control)

Input sinewave 2000mV at 1kHz to R/L channel of AUX-IN socket

Set DSC to Flat mode

Adjust volume to obtain 500mW across 4 ohm load at 1ch speaker ouput

The 500mW will be used as 0dB reference

Inject sinewave 2000MV to AUX - IN socket with frequencies indicated below :

Inject sinewave 500MV to MP3-LINK socket with frequencies indicated below :

Tabel 1a (Tolerance ± 3dB)

Frequency	DSC Modes with DBB Off			
	JAZZ DBB Off	ROCK DBB Off	TECHNO DBB ON	OPTIMAL DBB ON
100 Hz	+2dB	+12 Db	+6 dB	+ 10 dB
1 kHz	0 dB	+ 3 dB	+ 2 dB	+ 2 dB
10 kHz	-2dB	+ 6 dB	+2 dB	+ 4dB

2) DBB (Dynamic Bass Boot)

Play CD testing signal of 1KHZ

Set DSC to FLAT mode and switch off DBB

Adjust volume level will be as 0 dB reference.

Tabel 2 (Tolerance ± 3dB)

Frequency	DBB OFF	DBB ON		
100HZ	0	+14dB		

TECHNIAL DESCRIPTION

SOFTWARE IMPLEMENTED CLOCK / TIMER FUNCTION WITH 32.768Khz QUARTZ OSCILLATOR.

GENERAL PART

Timer Setting	:	Clock and Timer
Timer Wakeup Mode	:	LAST SETTING (MODE)
Remarks Time Setting	:	for 24hrs (05/12/98/55/79/96) ,for 12 hrs (37/)
Volume at Wakeup	:	Last Setting
No of Timer Settings	:	1
Clock Accuracy	:	Normal: 1 sec/day Limit : 2 sec/day

INDICATORS

Display Type	:	LCD

TECHNIAL DESCRIPTION

CD + MP3 - Part Specifications

CD mechnism refer to Philips standard specification

GENERAL PART

Measurement are directly done at the connector on CDC board

Description	Extern	Nom	Lim	Unit
Output Resistance	No	/	/	Ohms
Output Voltage - Unloaded (0dB , 1 kHz)	No	/	/	Vrms
Channel Unbalance	YES	0	-3	dB
Frequency Response (125 Hz - 16 kHz)	YES	0	-3	dB
Signal to Noise Ratio (Unweighted)	Yes	60	50	dB
Signal to Noise Ratio (A - weighted)	Yes	65	55	dBA
Crosstalk (1kHz)	Yes	60	50	dB
Crosstalk (125Hz to 16kHz)	YES	55	45	dB
Hum & Noise (*1)	No	/	/	nW
Emphasis	-	/	/	/

TECHNIAL DESCRIPTION

TUNER using Digital PLL Tuner SI4730C40

GENERAL PART

WAVE RANGE	TOLERANCE	TUNING GRID
FM 87.5 - 108 MHz		50KHZ
MW 530 - 1700 kHz		10KHz

AERIAL
FM : PIGTAIL ANT 1200MM
MW : AM LOOP ANTENNA AH42-20001P-A D145x120mm

INDICATORS

ELECTRICAL DATA

A.M		Nom	Limit	Unit	F.M.		Nom	Limit	Unit
					- 3 dB Limiting Point		/	/	dBf
Channel Unbalance	:	0	-3	dB	Channel Unbalance	:	0	-3	dB
AGC Figure of Merit	:	30	25	dB	Distortion (RF 1mV, Frq Dev.75 kHz)	:	2	3	%
Distortion (RF 50mV, M 80%)	:	3	5	%	Stereo - 46 dB Quieting	:	46	49	dBf
IF		/	/	kHz	Crosstalk (RF1mV, Freq Dev.40kHz)	:	25	18	dB
					IF		/	/	MHz
Search tuning sensitivity		60	72	dBV/m	Search tuning sensitivity		28	37	dBf

Wave Range		Noise Limited Sensitivity 26 dB			Image Rejection dB	IF Rejection dB	Large Signal	Selectivity S3 / S9 / 300kHz dB
MW 600 kHz	Nom.	1500uV/M			/	/	1000mV/M	/
	Lim.	4000uV/M			/	/	500mV/M	/
MW 1400 kHz	Nom.	1500uV/M			/	/	1000mV/M	/
	Lim.	4000uV/M			/	/	500mV/M	/
FM 98 MHz	Nom.		16dBf		/	/	116 dBf	/
	Lim.		22dBf		/	/	108 dBf	/

TECHNIAL DESCRIPTION

USB

Measurment are directly done at the connector on the board

GENERAL PART

Measurement are directly done at the connector on CDC board

Description	Specification
Output Resistance	< = 1.5 kOhm
Output Voltage RL = 33 k ohm ( )dB, 1 Khz)	830mVrms +/- 1.5dB
Channel Unbalance	< = +/- 3 dB
THD + Noise (0dB, 1Khz)	<= 0.3 5 %
Channel Crosstalk (100Hz - 16,000 Hz)	>= 35 dB
(0 dB, 1 KHz)	>= 40 dB
Signal to Noise Ratio (0dB,1kHz)	>= 65dBA (A - weighted)
(100 - 16,000 Hz)	>= 60dBA (A - weighted)
Frequency Response (+/- 3dB), reference 1kHz	100Hz - 16kHz

TECHNIAL DESCRIPTION

AUX IN

AUX Part

	Nom.	Limit	Condition
10% THD Output Power	50W	45W	2000mV 1KHz input
SNR unwtd.	60dB	50dB	2000mV 1KHz input
SNR wtd. dBA	65dBA	55dBA	2000mV 1KHz input
Crosstalk (1KHz)	60dB	50dB	2000mV input
Crosstalk (10KHz)	60dB	50dB	2000mV input
Frequency response (-3dB)	100 to 10KHz (overall)		2000mV input
THD (1KHz, 0dB)	2%	3%	2000mV 1KHz input

MP3 LINK

	Nom.	Limit	Condition
10% THD Output Power	50W	45W	500mV 1KHz input
SNR unwtd.	60dB	50dB	500mV 1KHz input
SNR wtd. dBA	65dBA	55dBA	500mV 1KHz input
Crosstalk (1KHz)	60dB	50dB	500mV input
Crosstalk (10KHz)	60dB	50dB	500mV input
Frequency response (-3dB)	100 to 10KHz (overall)		500mV input
THD (1KHz, 0dB)	2%	3%	500mV 1KHz input

VERSION VARIATION

Type /Versions: / Board in used: / Service policy	FWM210									
	/55	/77	/78	/12						
Display BOARD	C	C	C	C						
Main BOARD	C	C	C	C						
USB BOARD	C	C	C	C						
LINE In BOARD	C	C	C	C						
KEY BOARD	C	C	C	C						
AMP BOARD	C	C	C	C						

Type /Versions: / Features / Feature diffrence	FWM210									
	/55	/77	/78	/12						
RDS										
VOLTAGE SELECTOR										
ECO STANDBY - DARK	√	√	√	√						

* TIPS : C -- Component Lever Repair.
M -- Module Lever Repair
√ -- Used

3 - 1

SET BLOCK DIAGRAM

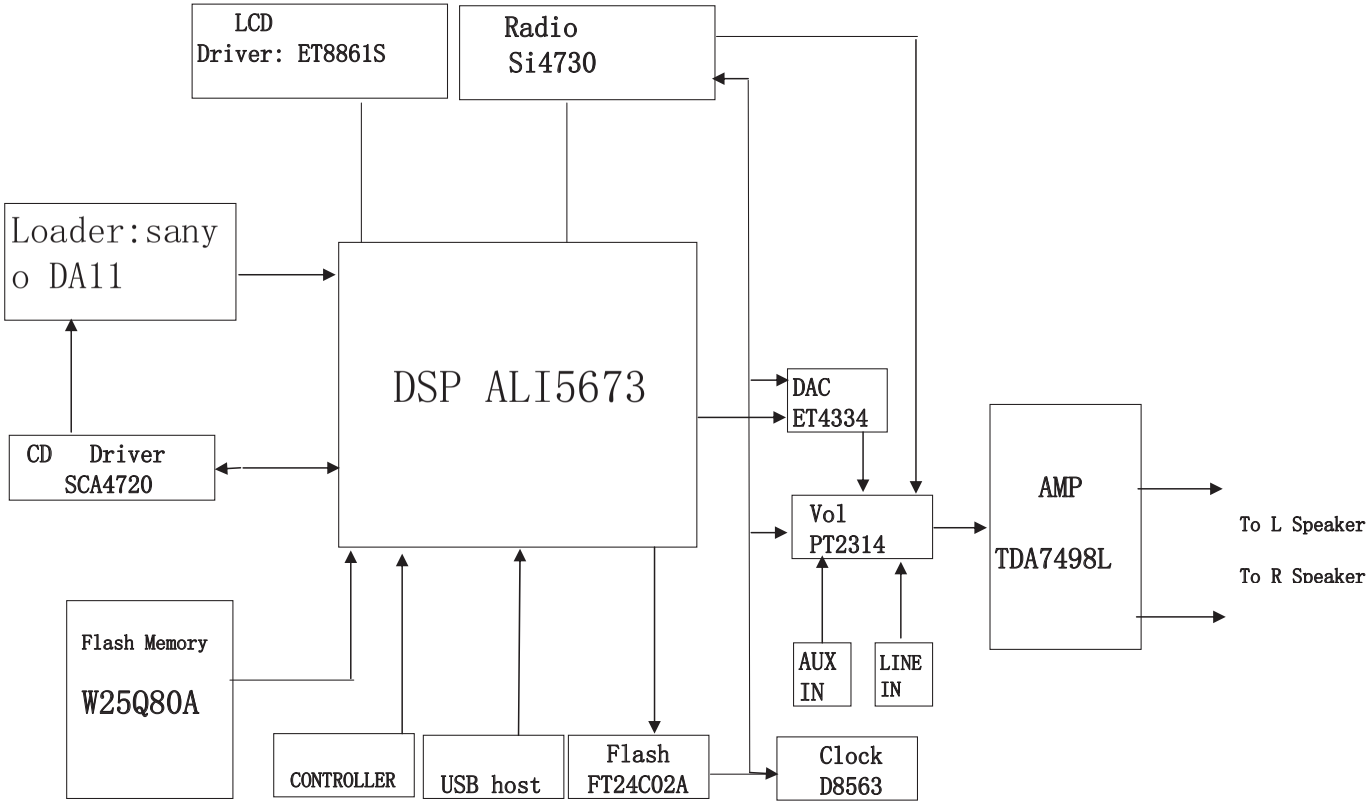

3-2

SET WIRING DIAGRAM

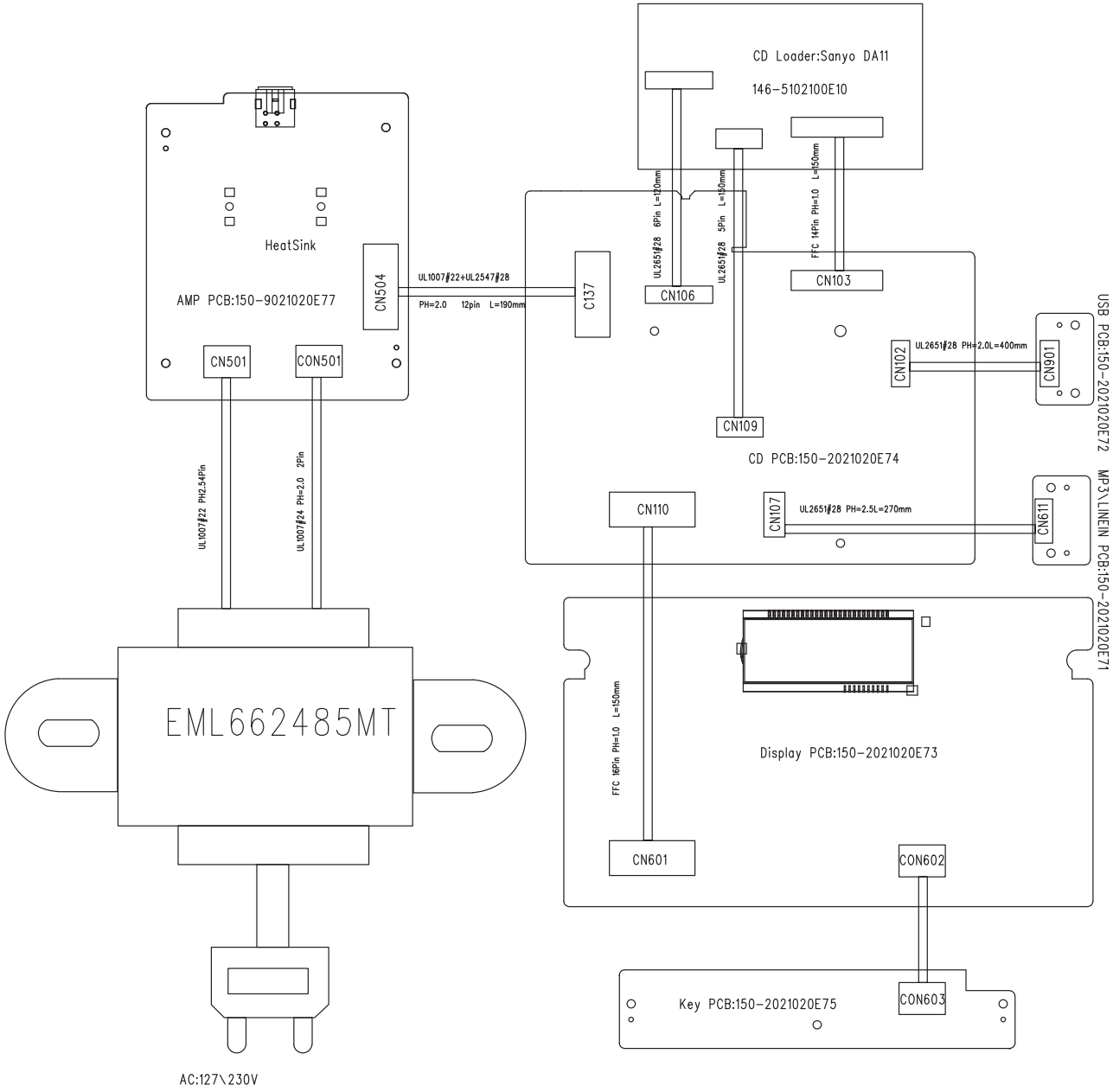

4 - 1

CIRCUIT DIAGRAM - MAIN BOARD PART1

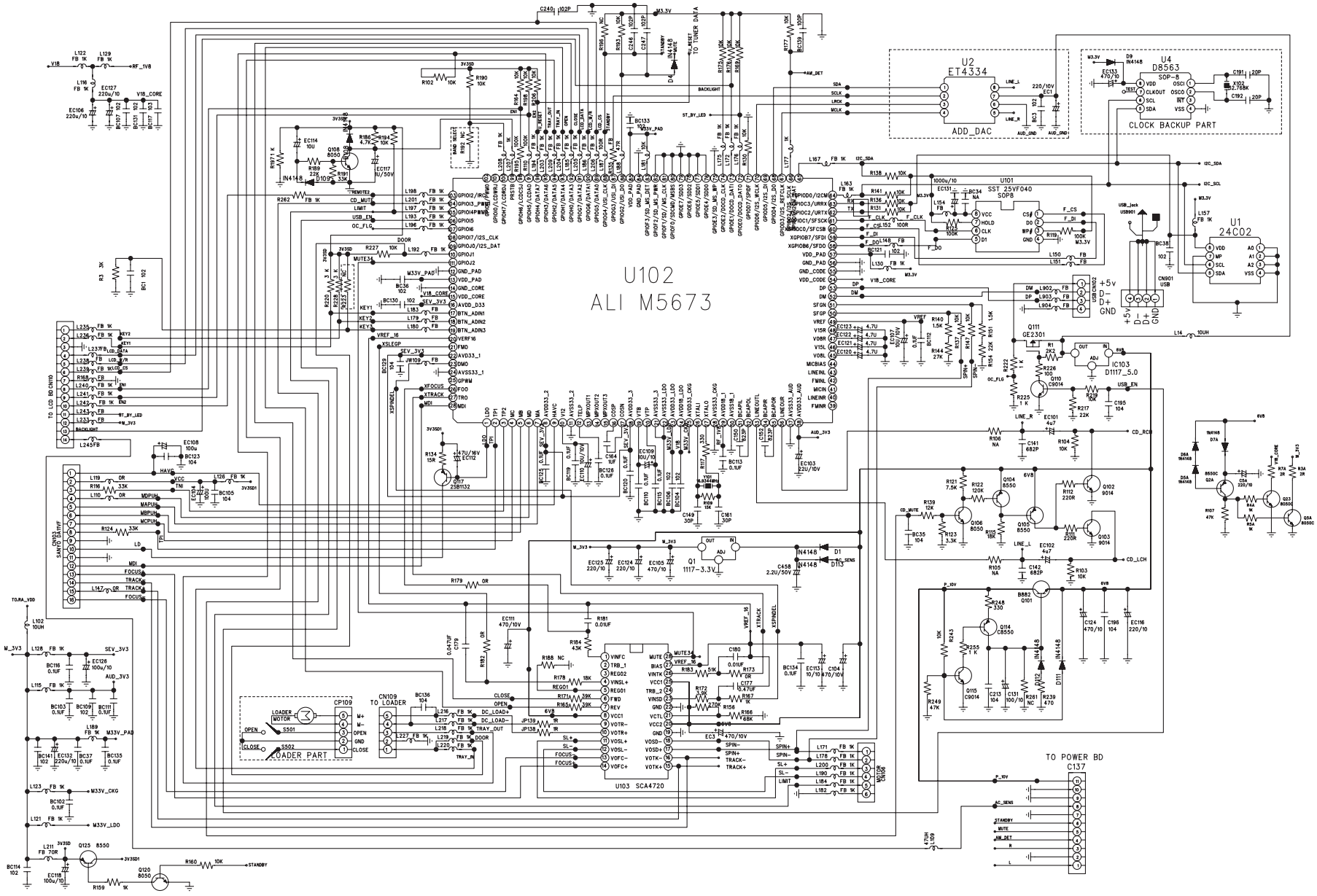

4 - 2

CIRCUIT DIAGRAM - MAIN BOARD PART2

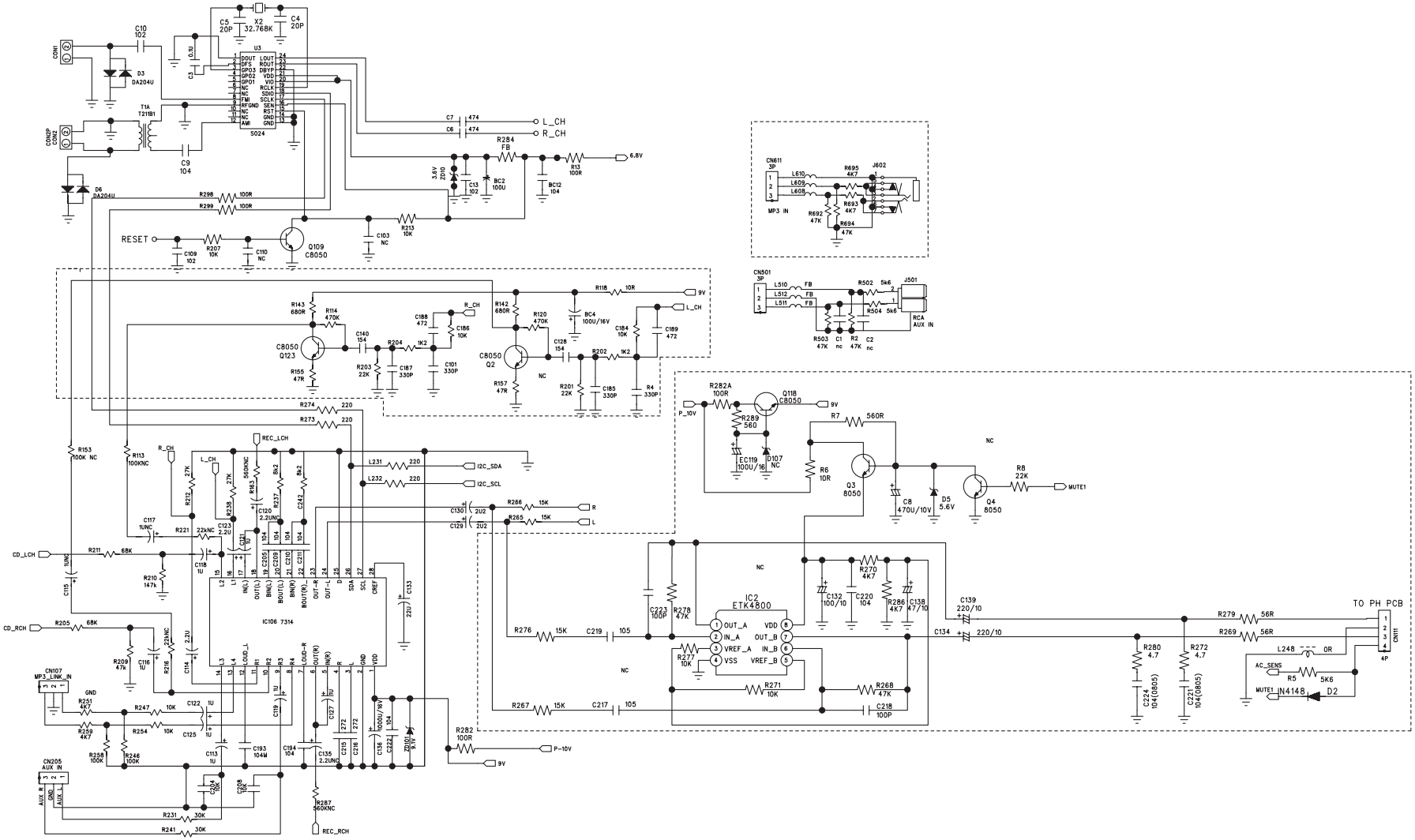

4 - 3

LAYOUT DIAGARM - MAIN BOARD
TOP SIDE VIEW

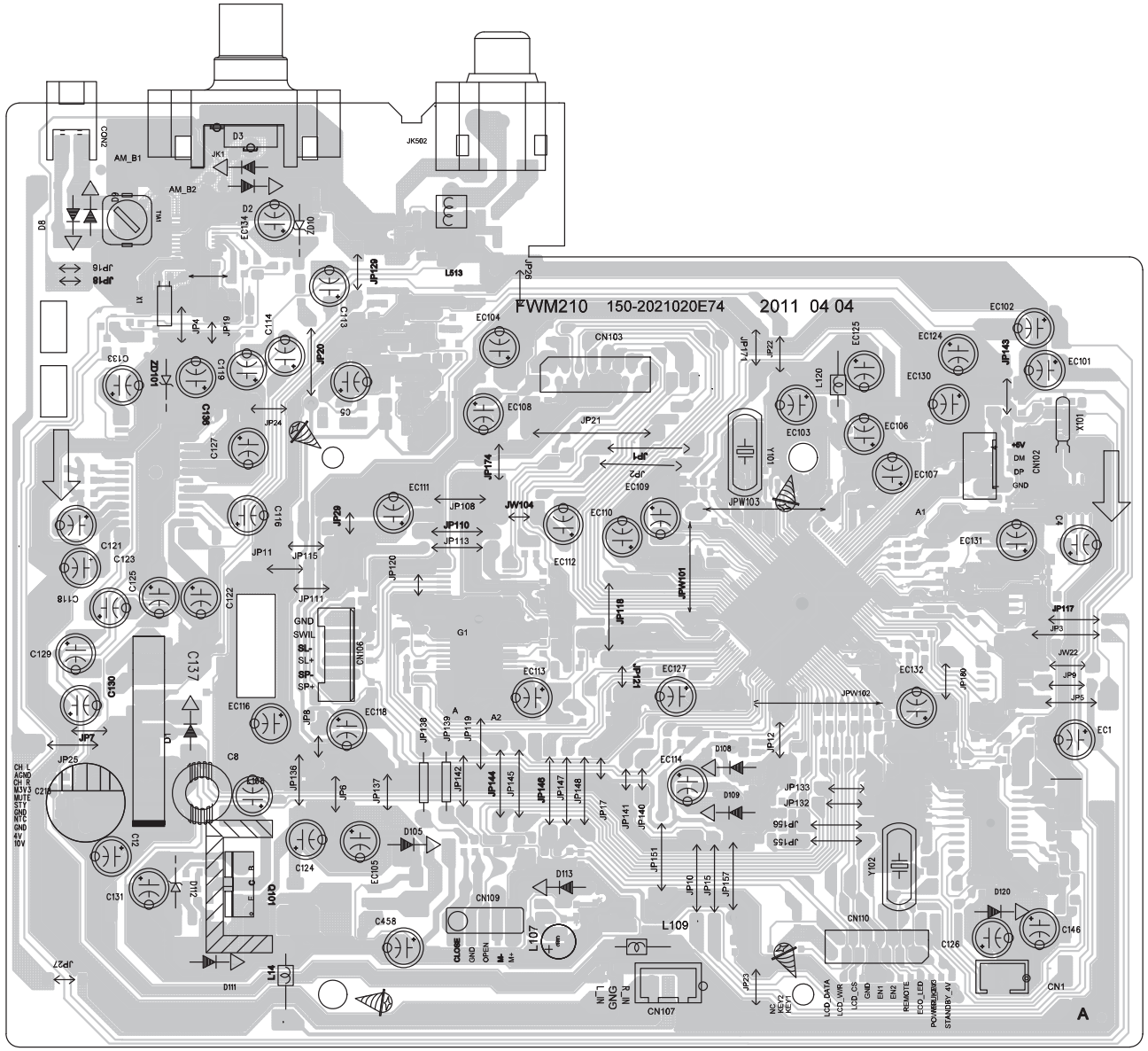

4 - 4

LAYOUT DIAGARM - MAIN BOARD
BOTTOM SIDE VIEW

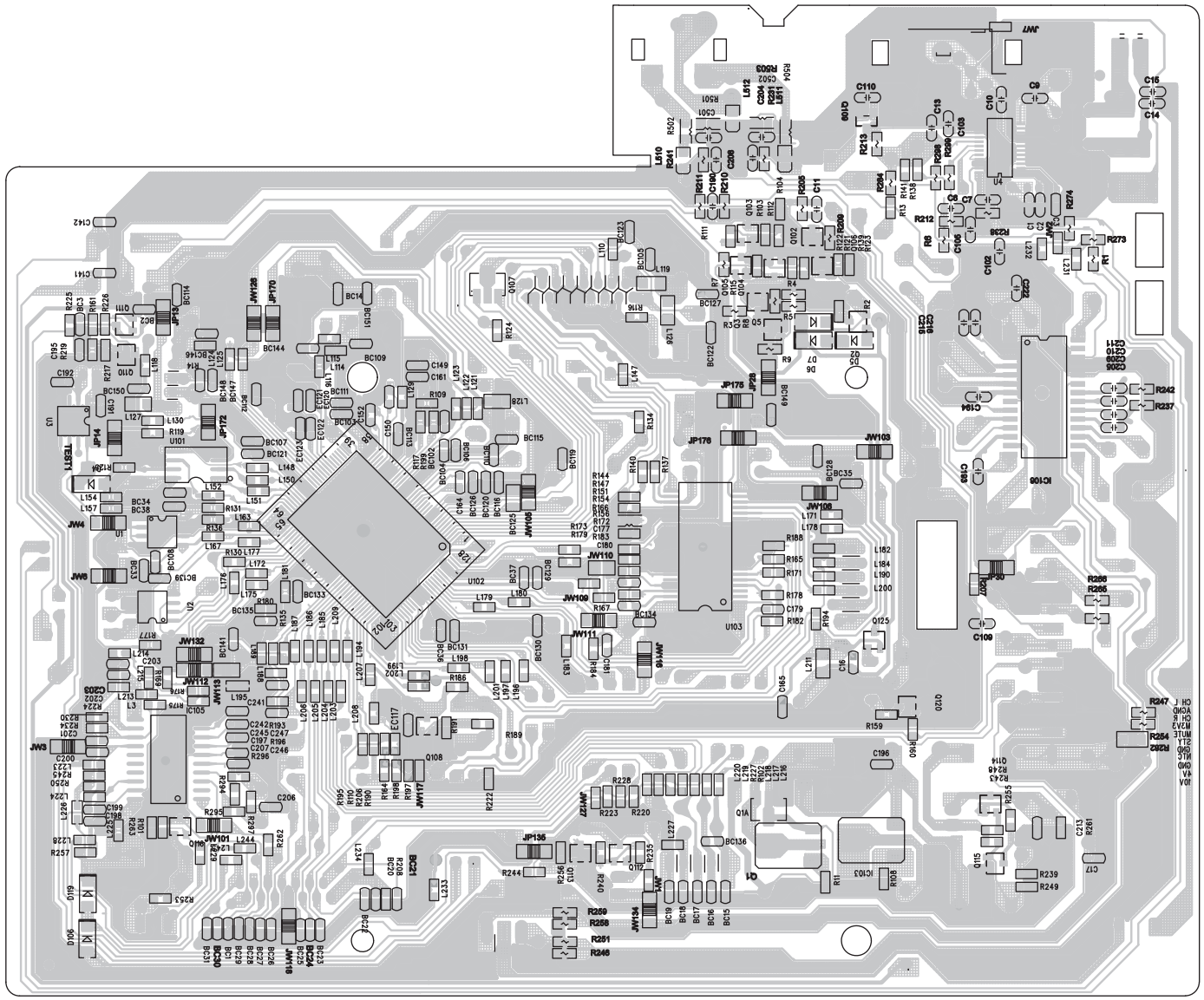

5-1

CIRCUIT DIAGARM - DISPLAY BOARD

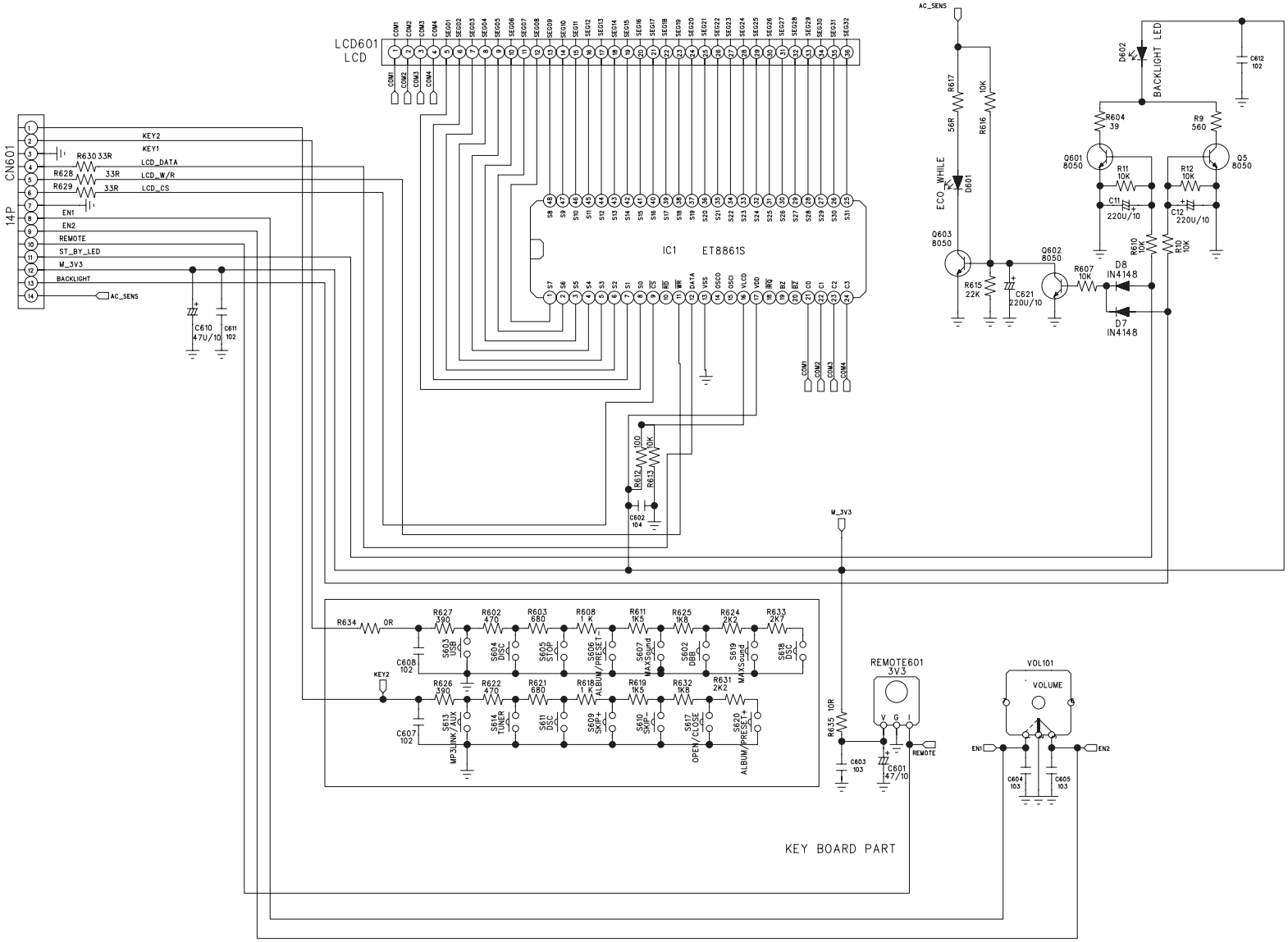

5-2

LAYOUT DIAGARM - DISPLAY BOARD
TOP SIDE VIEW

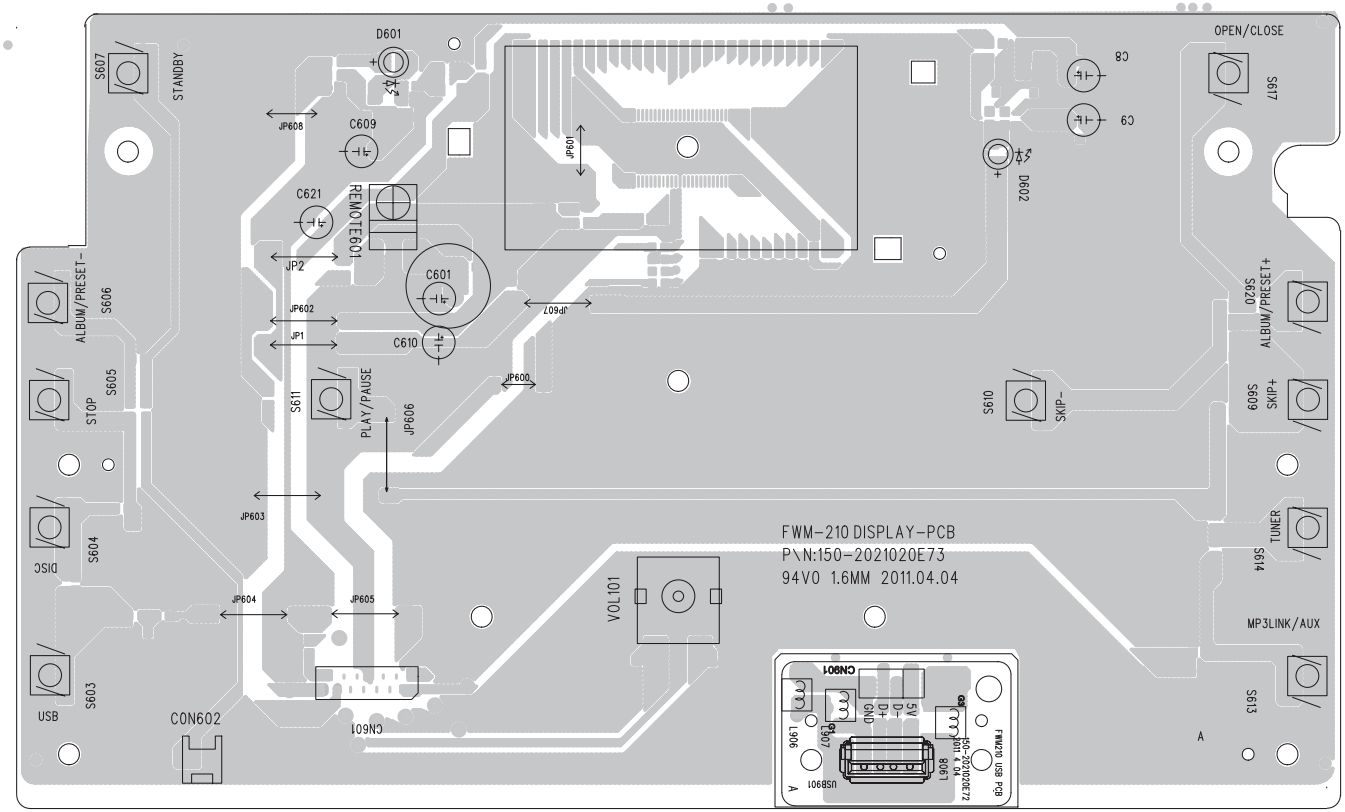

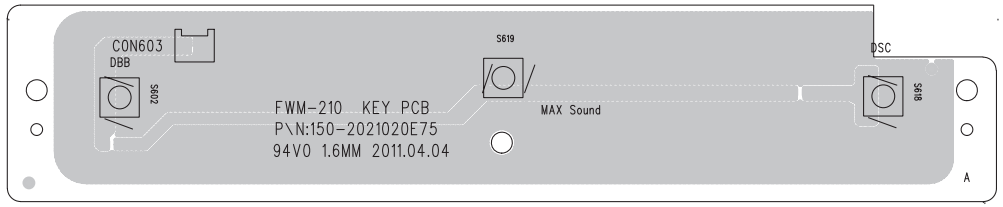

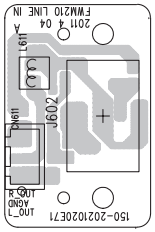

5-3

LAYOUT DIAGARM - DISPLAY BOARD
BOTTOM SIDE VIEW

5-2

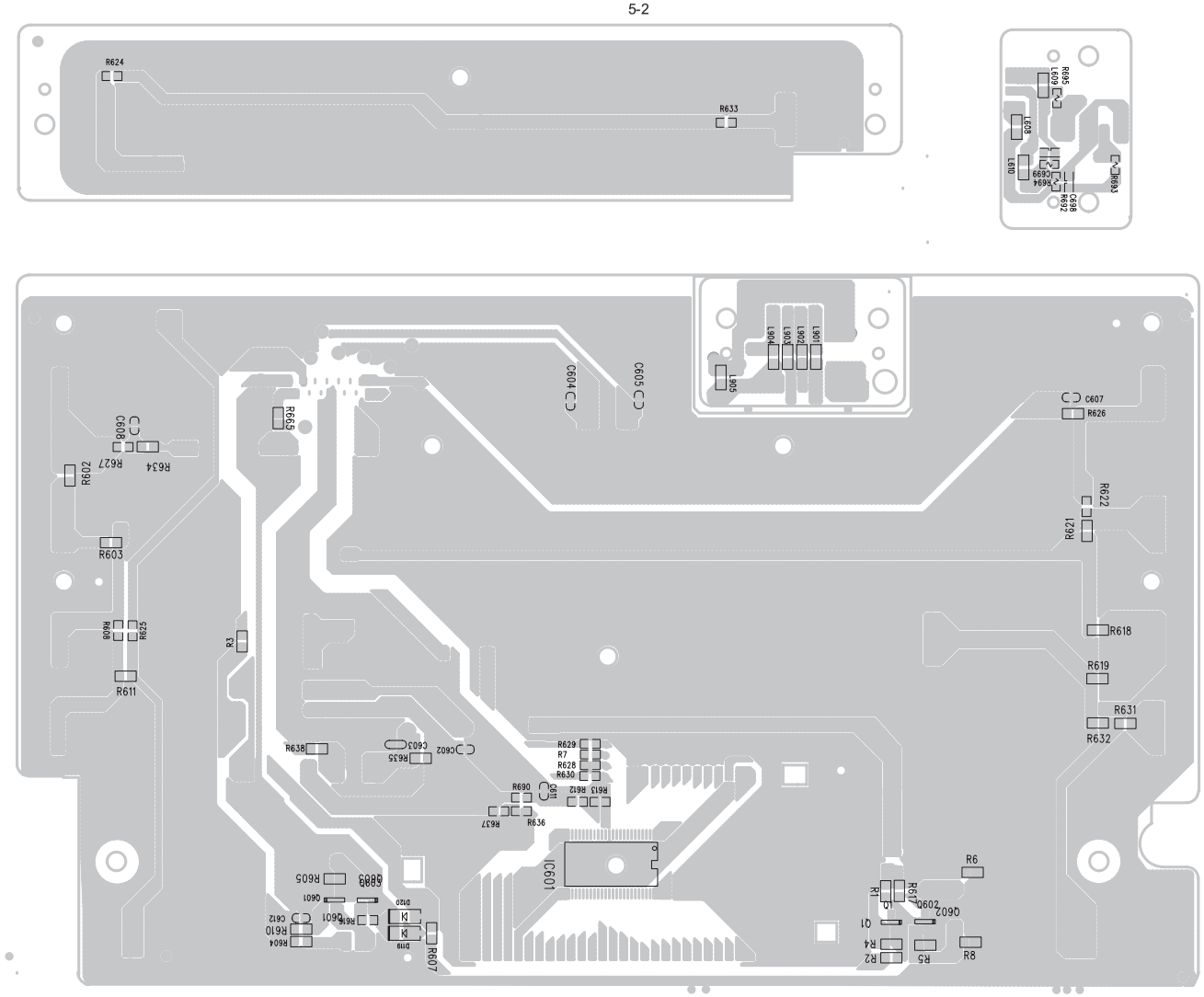

6-1

CIRCUIT DIAGARM - POWER+AMP BOARD

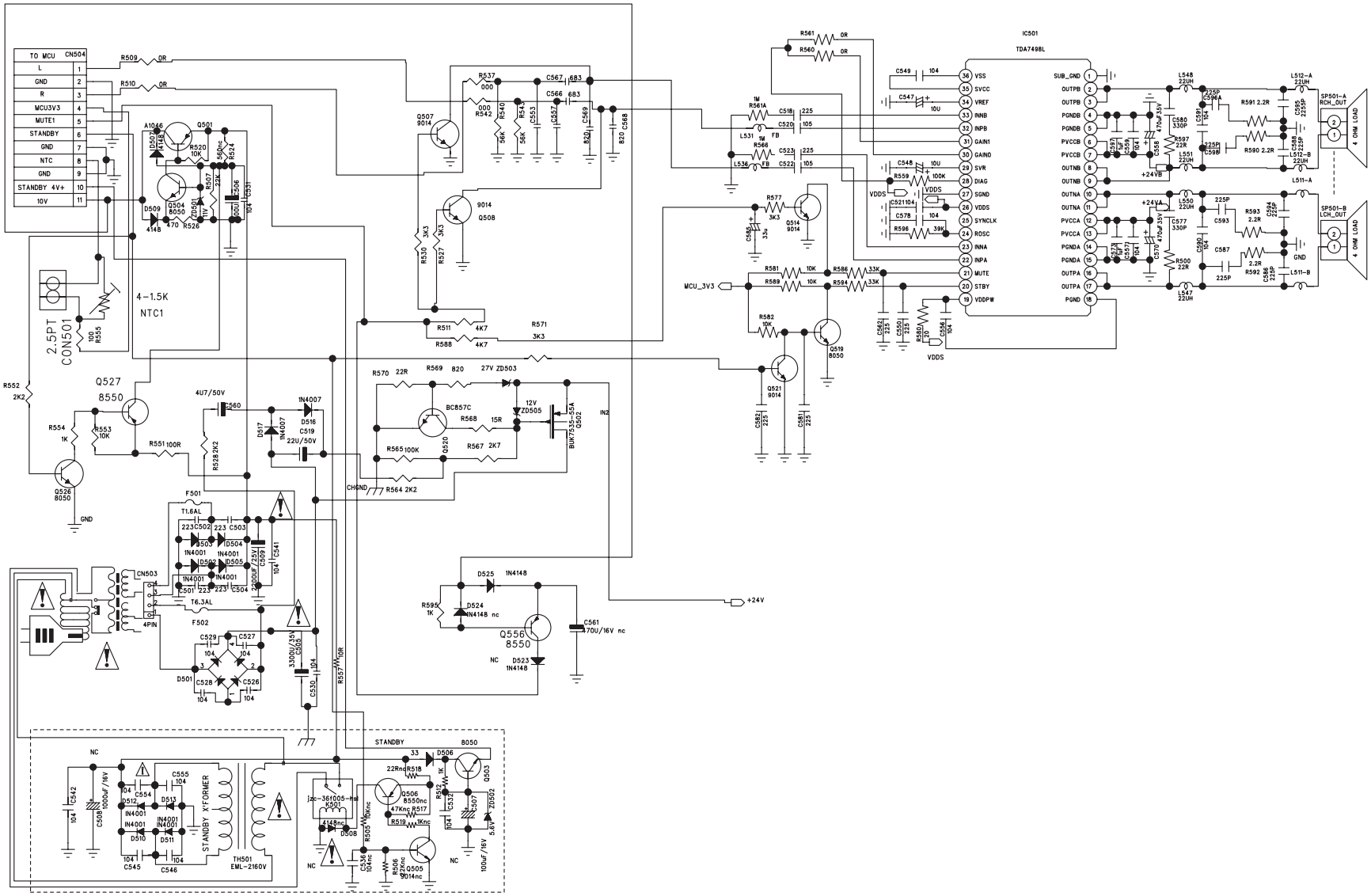

6-2

LAYOUT DIAGARM - POWER+AMP BOARD
TOP SIDE VIEW

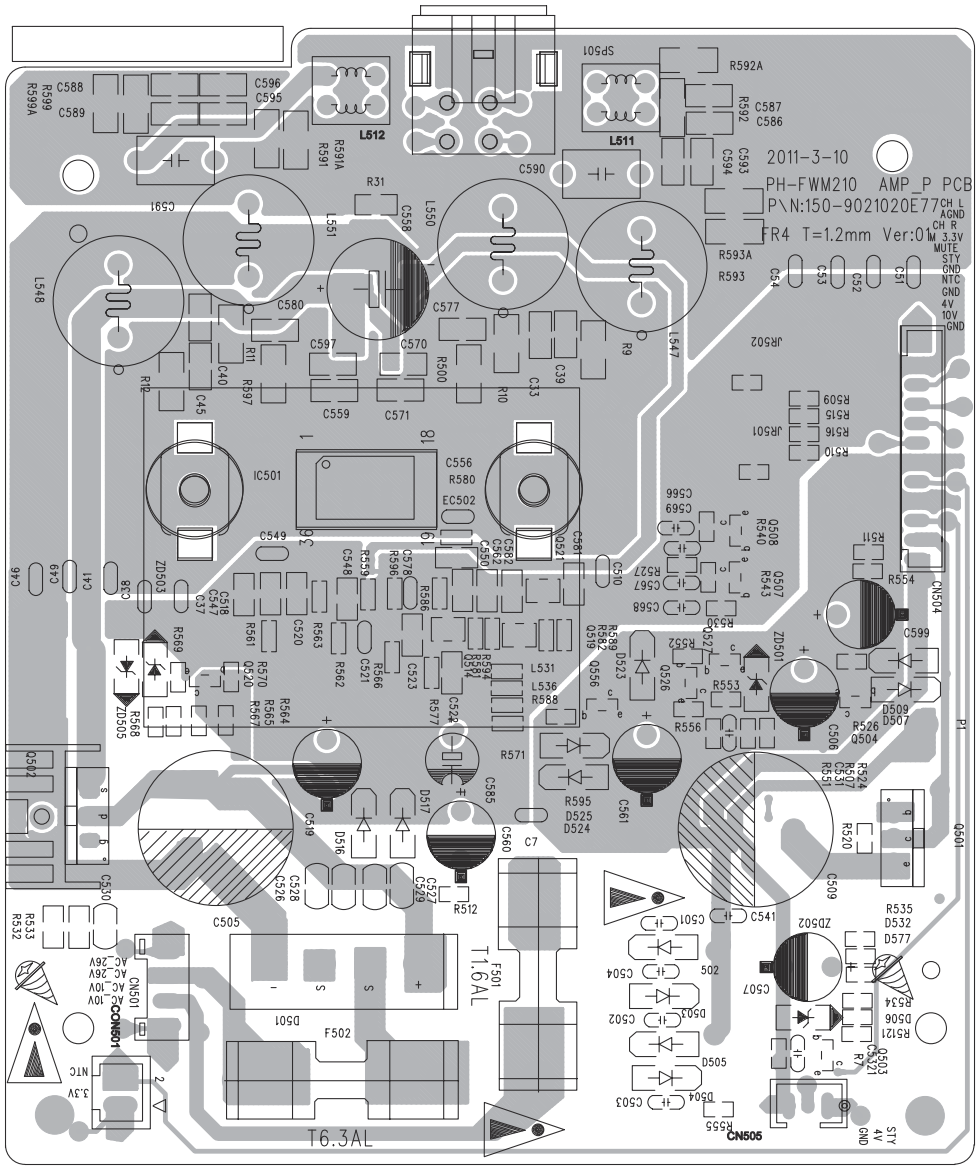

6 - 3

LAYOUT DIAGARM - POWER+AMP BOARD
BOTTOM SIDE VIEW

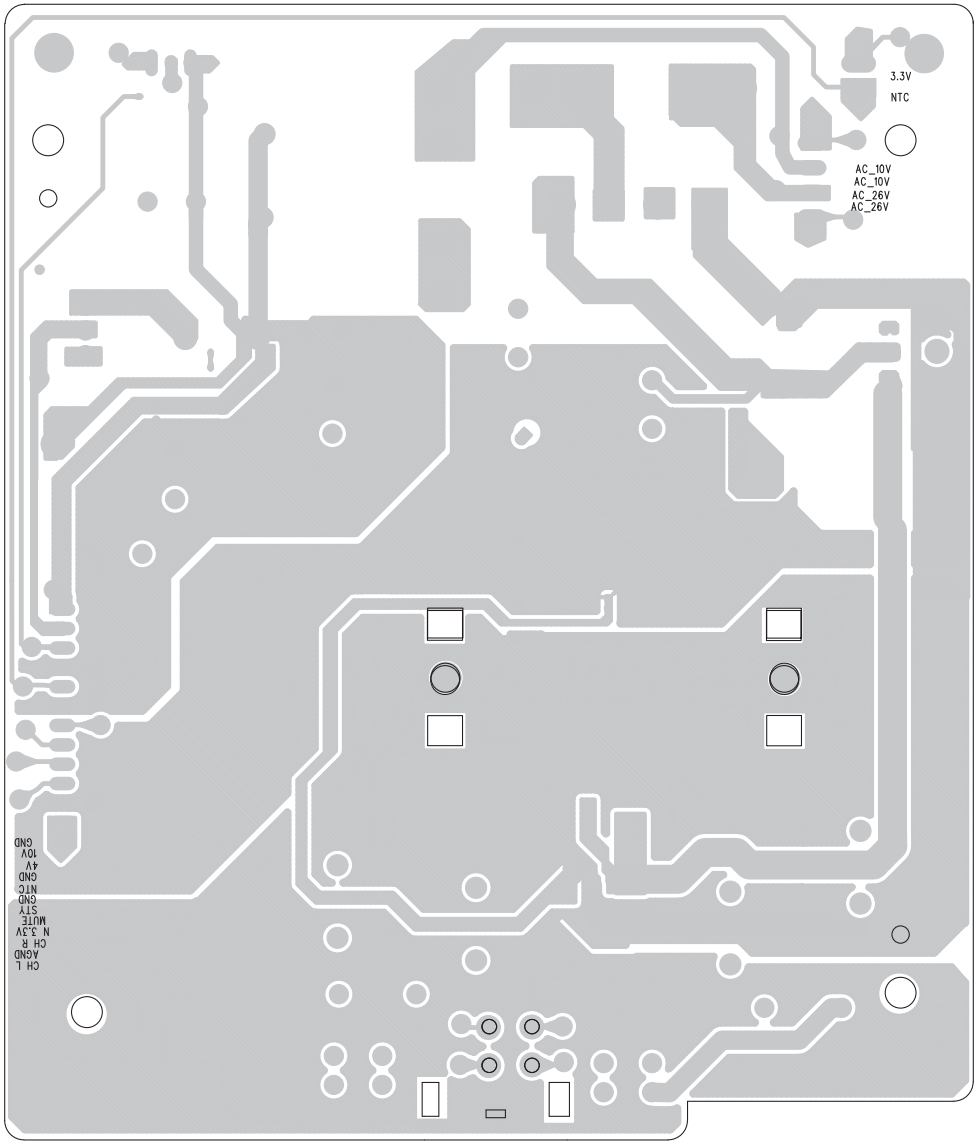

7-1

EXPLODED VIEW DIAGRAM

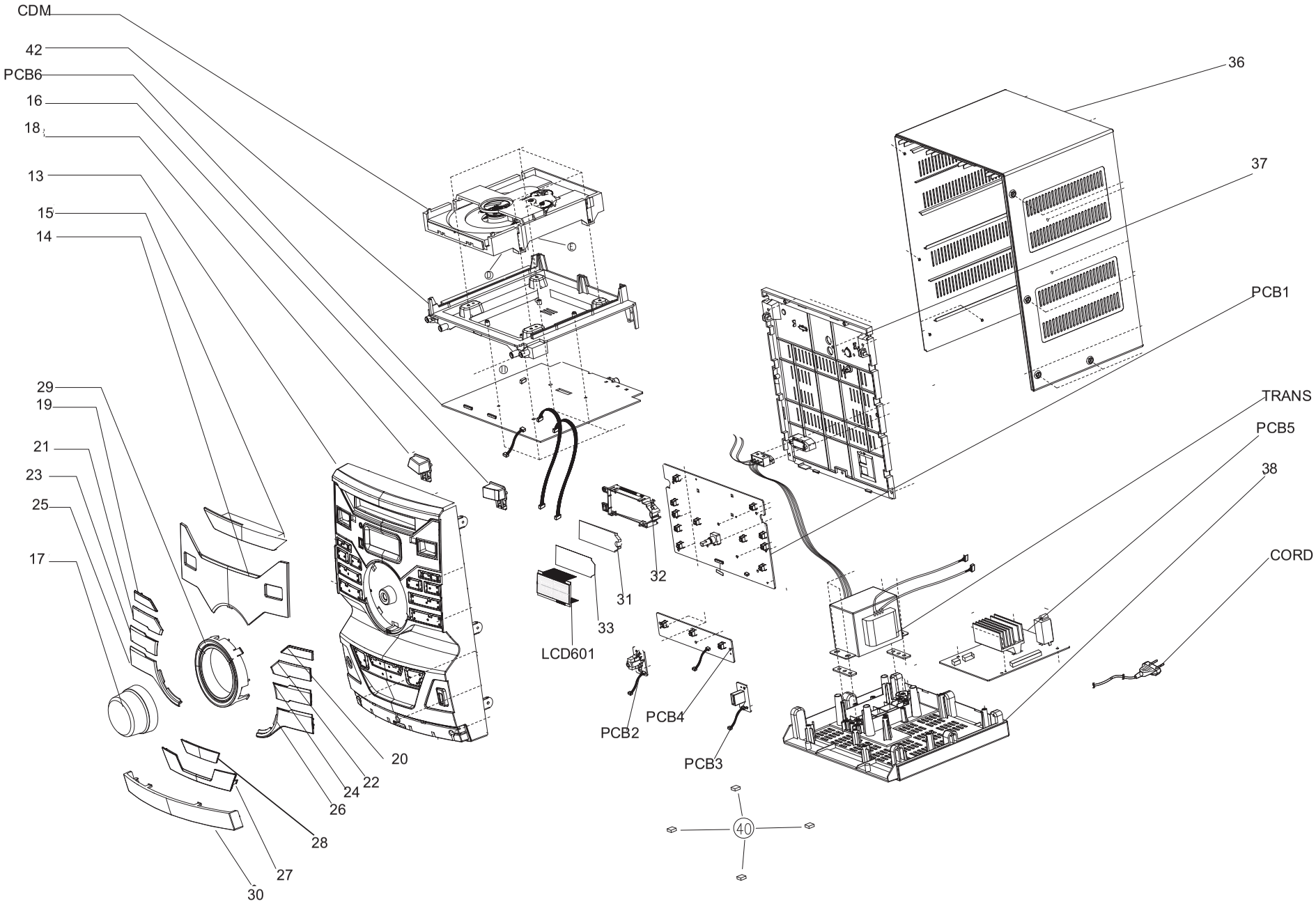

Version History

V1.0: Initial release

V1.1: Add /78 version

V1.2: Add /12 version

V1.3: Add FWM211X/77 version