Colour Television **Chassis**

L03.1L

AA

Service
Service
Service

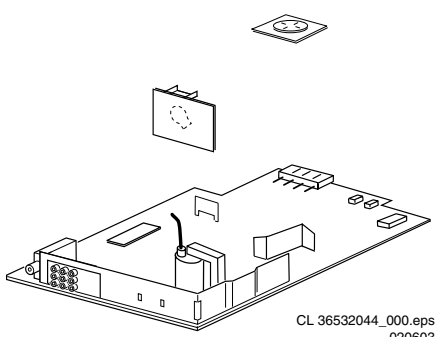

CL 36532044_000.eps
020603

ServiceManual

Contents **Page**

1.	Technical Specifications, Connections, and Chassis Overview		2	
2.	Safety Instructions, Warnings, and Notes		4	
3.	Directions for Use		5	
4.	Mechanical Instructions		6	
5.	Service Modes, Error Codes, and Fault Finding		7	
6.	*Block Diagrams, Testpoint Overviews, and Waveforms*			
	Block Diagram		11	
	I2C and Supply Voltage Overview		12	
	Testpoint Overview		13	
7.	*Circuit Diagrams and PWB Layouts*	*Diagram*		*PWB*
	Mono Carrier: Power Supply	(A1)	14	24-30
	Mono Carrier: Deflection	(A2)	15	21-24
	Mono Carrier: Tuner IF	(A3)	16	21-24
	Mono Carrier: Video Processing	(A4)	17	21-24
	Mono Carrier: Audio Processing (Stereo + SAP)	(A5)	18	21-24
	Mono Carrier: Audio Amplifier + Mono Sound Processing	(A6)	19	21-24
	Mono Carrier: Font I/O + Front Control + Headphone	(A7)	20	21-24
	Mono Carrier: Rear I/O Cinch	(A8)	21	21-24
	Mono Carrier: Diversity Table for Rear I/O Cinch		22	21-24
	Mono Carrier: DVD Power Supply (Optional)	(A9)	23	21-24
	CRT Panel	(B1)	31	32
	Top Control Panel	(E)	33	33
8.	Alignments		35	
9.	Circuit Descriptions, List of Abbreviations, and IC Data Sheets		43	
	Abbreviation List		37	
	IC Data Sheets		39	
10.	Spare Parts List		49	
11.	Revision List		53	

©Copyright 2005 Philips Consumer Electronics B.V. Eindhoven, The Netherlands.
All rights reserved. No part of this publication may be reproduced, stored in a retrieval system or transmitted, in any form or by any means, electronic, mechanical, photocopying, or otherwise without the prior permission of Philips.

Published by JH 0564 TV Service Printed in the Netherlands Subject to modification EN 3122 785 13901

PHILIPS

1. Technical Specifications, Connections, and Chassis Overview

Index of this chapter:

1.1 Technical Specifications
1.2 Connections
1.3 Chassis Overview

1.1 Technical Specifications

1.1.1 Reception

Tuning system	:	PLL
Colour systems	:	NTSC M
	:	PAL M
	:	PAL N
Sound systems	:	Mono, or
	:	BTSC with SAP
A/V connections	:	NTSC M
	:	PAL M
	:	PAL N
Channel selections	:	181 Presets/ Channels
	:	Full-Cable
IF frequency	:	45.75 MHz
Aerial input	:	75 ohm (F type), Coax

1.1.2 Miscellaneous

Audio output	:	Mono: 3 W rms
	:	Stereo: 2 x 3 W rms
Mains voltage	:	90 - 276 V (± 10 %)
Mains frequency	:	50 / 60 Hz (± 5 %)
Ambient temperature	:	+ 5 to + 45 °C
Minimum air pressure	:	60 kPa (=600 mBar)
Maximum humidity	:	90 %
Power consumption	:	36 W (14”) to
	:	50 W (21”)
Standby Power consumption	:	< 3 W

1.2 Connections

1.2.1 Front Connections and Front / Top Control

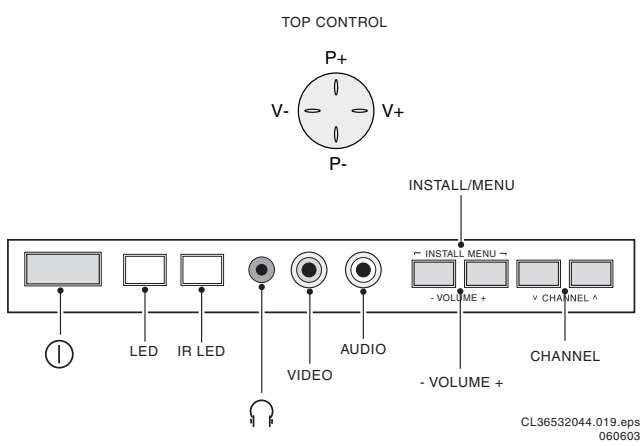

Figure 1-1 Front connections

Headphone

1	- Headphone, 3.5 mm	8 - 600 Ω / 4 mW	

Audio / Video In

2	- Video	1 Vpp / 75 ohm	
3	- Audio	Mono 0.2 V rms / 10 kohm	

1.2.2 Rear Connections

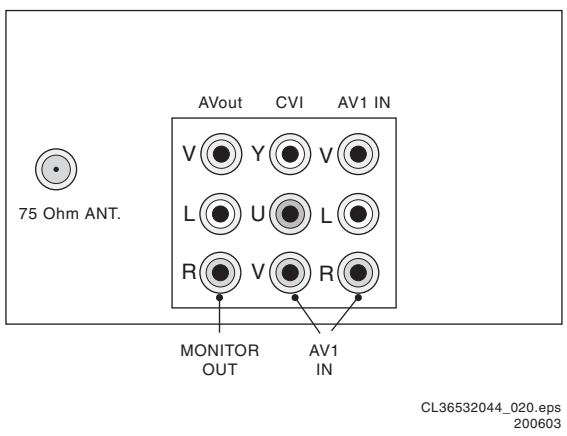

Figure 1-2 Rear connections

Monitor Out

1	- Video	1 Vpp / 75 ohm	
2	- Audio	L (0.5 Vrms / 1 kohm)	
3	- Audio	R (0.5 Vrms / 1 kohm)	

AV1 In (YUV)

1	- Y	0.7 Vpp / 75 ohm	
2	- U	0.7 Vpp / 75 ohm	
3	- V	0.7 Vpp / 75 ohm	

AV1 In

4	- Video	1 Vpp / 75 ohm	
5	- Audio	L (0.5 Vrms / 10 kohm)	
6	- Audio	R (0.5 V rms / 10 kohm)	

1.3 Chassis Overview

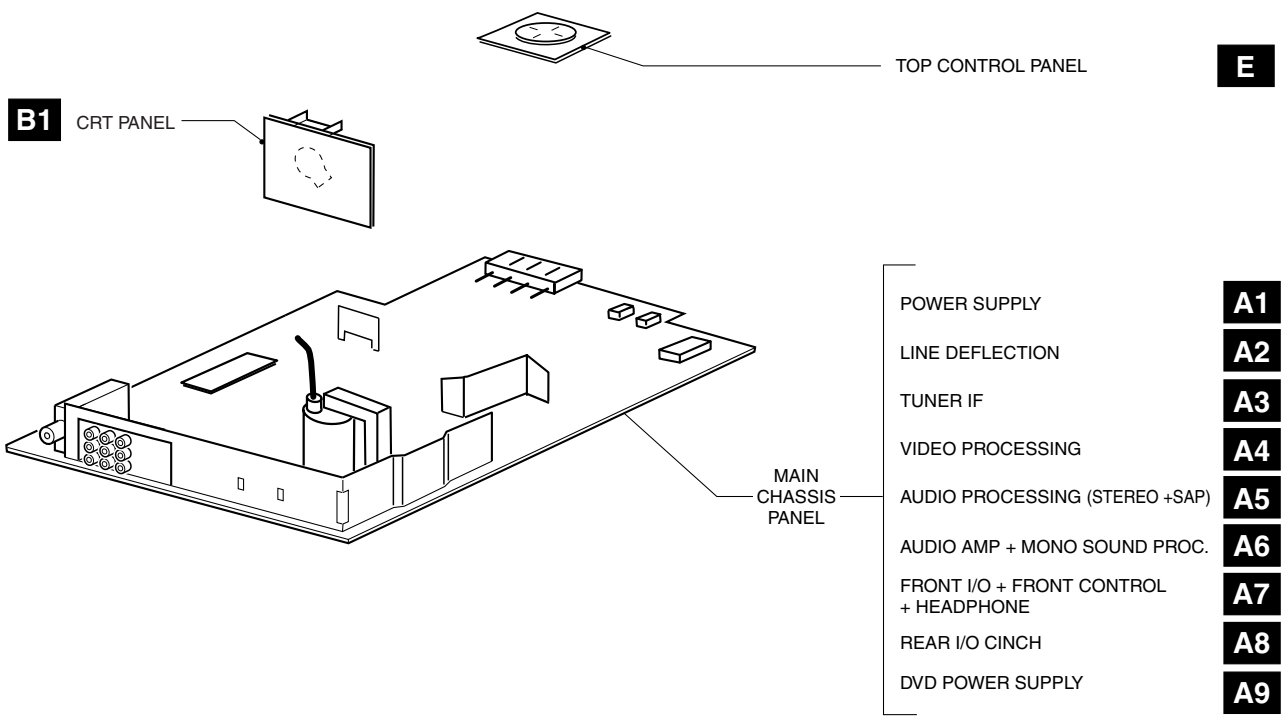

Figure 1-3 Chassis overview

2. Safety Instructions, Warnings, and Notes

Index of this chapter:
2.1 Safety Instructions
2.2 Maintenance Instructions
2.3 Warnings
2.4 Notes

2.1 Safety Instructions

Safety regulations require that **during** a repair:
- Connect the set to the Mains (AC Power) via an isolation transformer (> 800 VA).
- Replace safety components, indicated by the symbol ⚠, only by components identical to the original ones. Any other component substitution (other than original type) may increase risk of fire or electrical shock hazard.
- Wear safety goggles when you replace the CRT.

Safety regulations require that **after** a repair, the set must be returned in its original condition. Pay in particular attention to the following points:
- General repair instruction: as a strict precaution, we advise you to re-solder the solder connections through which the horizontal deflection current is flowing. In particular this is valid for the:
  1. Pins of the line output transformer (LOT).
  2. Fly-back capacitor(s).
  3. S-correction capacitor(s).
  4. Line output transistor.
  5. Pins of the connector with wires to the deflection coil.
  6. Other components through which the deflection current flows.

Note: This re-soldering is advised to prevent bad connections due to metal fatigue in solder connections, and is therefore only necessary for television sets more than two years old.
- Route the wire trees and EHT cable correctly and secure them with the mounted cable clamps.
- Check the insulation of the Mains (AC Power) lead for external damage.
- Check the strain relief of the mains (AC Power) cord for proper function, to prevent the cord from touching the CRT, hot components, or heat sinks.
- Check the electrical DC resistance between the Mains (AC Power) plug and the secondary side (only for sets which have a Mains (AC Power) isolated power supply):
  1. Unplug the Mains (AC Power) cord and connect a wire between the two pins of the Mains (AC Power) plug.
  2. Set the Mains (AC Power) switch to the "on" position (keep the Mains (AC Power) cord unplugged!).
  3. Measure the resistance value between the pins of the Mains (AC Power) plug and the metal shielding of the tuner or the aerial connection on the set. The reading should be between 4.5 Mohm and 12 Mohm.
  4. Switch "off" the set, and remove the wire between the two pins of the Mains (AC Power) plug.
- Check the cabinet for defects, to avoid touching of any inner parts by the customer.

2.2 Maintenance Instructions

We recommend a maintenance inspection carried out by qualified service personnel. The interval depends on the usage conditions:
- When a customer uses the set under normal circumstances, for example in a living room, the recommended interval is three to five years.
- When a customer uses the set in an environment with higher dust, grease, or moisture levels, for example in a kitchen, the recommended interval is one year.
- The maintenance inspection includes the following actions:
  1. Perform the “general repair instruction” noted above.
  2. Clean the power supply and deflection circuitry on the chassis.
  3. Clean the picture tube panel and the neck of the picture tube.

2.3 Warnings

- In order to prevent damage to ICs and transistors, avoid all high voltage flashovers. In order to prevent damage to the picture tube, use the method shown in figure “Discharge picture tube”, to discharge the picture tube. Use a high voltage probe and a multi-meter (position V_{DC}). Discharge until the meter reading is 0 V (after approx. 30 s).

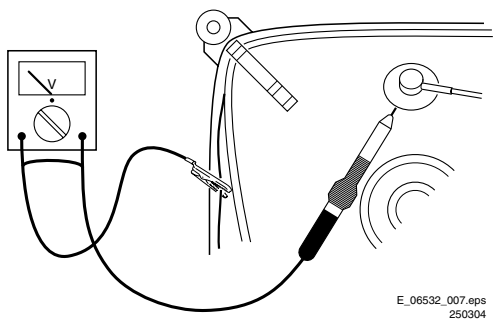

Figure 2-1 Discharge picture tube

- All ICs and many other semiconductors are susceptible to electrostatic discharges (ESD ⚠). Careless handling during repair can reduce life drastically. Make sure that, during repair, you are connected with the same potential as the mass of the set by a wristband with resistance. Keep components and tools also at this same potential. Available ESD protection equipment:
  – Complete kit ESD3 (small tablemat, wristband, connection box, extension cable and earth cable) 4822 310 10671.
  – Wristband tester 4822 344 13999.
- Be careful during measurements in the high voltage section.
- Never replace modules or other components while the unit is switched "on".
- When you align the set, use plastic rather than metal tools. This will prevent any short circuits and the danger of a circuit becoming unstable.

2.4 Notes

2.4.1 General

- Measure the voltages and waveforms with regard to the chassis (= tuner) ground (⏚), or hot ground (⏚), depending on the tested area of circuitry. The voltages and waveforms shown in the diagrams are indicative. Measure them in the Service Default Mode (see chapter 5) with a colour bar signal and stereo sound (L: 3 kHz, R: 1 kHz unless stated otherwise) and picture carrier at 475.25 MHz for PAL, or 61.25 MHz for NTSC (channel 3).
- Where necessary, measure the waveforms and voltages with (⊓) and without (⊼) aerial signal. Measure the voltages in the power supply section both in normal operation (◑) and in stand-by (⏻). These values are indicated by means of the appropriate symbols.
- The semiconductors indicated in the circuit diagram and in the parts lists, are interchangeable per position with the

semiconductors in the unit, irrespective of the type indication on these semiconductors.

2.4.2 Schematic Notes

- All resistor values are in ohms and the value multiplier is often used to indicate the decimal point location (e.g. 2K2 indicates 2.2 kohm).
- Resistor values with no multiplier may be indicated with either an "E" or an "R" (e.g. 220E or 220R indicates 220 ohm).
- All capacitor values are given in micro-farads (μ= x10^{-6}), nano-farads (n= x10^{-9}), or pico-farads (p= x10^{-12}).
- Capacitor values may also use the value multiplier as the decimal point indication (e.g. 2p2 indicates 2.2 pF).
- An "asterisk" (*) indicates component usage varies. Refer to the diversity tables for the correct values.
- The correct component values are listed in the Spare Parts List. Therefore, always check this list when there is any doubt.

2.4.3 Lead Free Solder

Philips CE is going to produce lead-free sets (PBF) from 1.1.2005 onwards.

Figure 2-2 Lead-free logo

This sign normally has a diameter of 6 mm, but if there is less space on a board also 3 mm is possible. Regardless of this logo (is not always present), one must treat all sets from this date onwards according to the following rules

Due to lead-free technology some rules have to be respected by the workshop during a repair:
- Use only lead-free soldering tin Philips SAC305 with order code 0622 149 00106. If lead-free solder paste is required, please contact the manufacturer of your soldering equipment. In general, use of solder paste within workshops should be avoided because paste is not easy to store and to handle.
- Use only adequate solder tools applicable for lead-free soldering tin. The solder tool must be able
  - To reach at least a solder-tip temperature of 400°C.
  - To stabilise the adjusted temperature at the solder-tip.
  - To exchange solder-tips for different applications.
- Adjust your solder tool so that a temperature around 360°C - 380°C is reached and stabilised at the solder joint. Heating time of the solder-joint should not exceed ~ 4 sec. Avoid temperatures above 400°C, otherwise wear-out of tips will rise drastically and flux-fluid will be destroyed. To avoid wear-out of tips, switch “off” unused equipment or reduce heat.
- Mix of lead-free soldering tin/parts with leaded soldering tin/parts is possible but PHILIPS recommends strongly to avoid mixed regimes. If not to avoid, clean carefully the solder-joint from old tin and re-solder with new tin.
- Use only original spare-parts listed in the Service-Manuals. Not listed standard material (commodities) has to be purchased at external companies.
- For sets produced before 1.1.2005, containing leaded soldering tin and components, all needed spare parts will be available till the end of the service period. For the repair of such sets nothing changes.

In case of doubt whether the board is lead-free or not (or with mixed technologies), you can use the following method:
- Always use the highest temperature to solder, when using SAC305 (see also instructions below).
- De-solder thoroughly (clean solder joints to avoid mix of two alloys).

Caution: For BGA-ICs, you **must** use the correct temperature-profile, which is coupled to the 12NC. For an overview of these profiles, visit the website *www.atyourservice.ce.philips.com* (needs subscription, but is not available for all regions)
You will find this and more technical information within the "Magazine", chapter "Workshop information".
For additional questions please contact your local repair help desk.

2.4.4 Practical Service Precautions

- **It makes sense to avoid exposure to electrical shock.** While some sources are expected to have a possible dangerous impact, others of quite high potential are of limited current and are sometimes held in less regard.
- **Always respect voltages**. While some may not be dangerous in themselves, they can cause unexpected reactions that are best avoided. Before reaching into a powered TV set, it is best to test the high voltage insulation. It is easy to do, and is a good service precaution.

3. Directions for Use

You can download this information from the following websites:
http://www.philips.com/support
http://www.p4c.philips.com

4. Mechanical Instructions

Index of this chapter:

4.1 Rear Cover Removal
4.2 Service Position Main Panel
4.3 Rear Cover Mounting

4.1 Rear Cover Removal

1. Remove all fixation screws of the rear cover.
2. Now pull the rear cover in backward direction to remove it.

4.2 Service Position Main Panel

1. Disconnect the strain relief of the AC power cord.
2. Remove the main panel, by pushing the two center clips outward [1]. At the same time pull the panel away from the CRT [2].
3. If necessary disconnect the degaussing coil by removing the cable from (red) connector 0212.
4. Move the panel somewhat to the left and flip it 90 degrees [3], with the components towards the CRT.

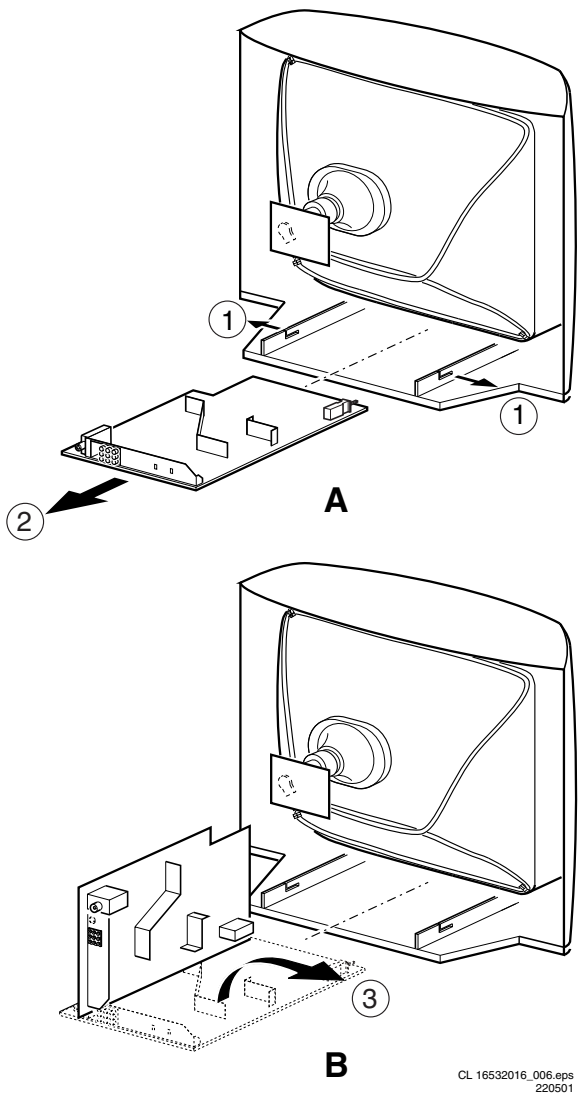

Figure 4-1 Service Position

4.3 Rear Cover Mounting

Before you mount the rear cover, perform the following checks:

1. Check whether the mains cord is mounted correctly in its guiding brackets.
2. Re-place the strain relief of the AC power cord into the cabinet.
3. Check whether all cables are replaced in their original position

5. Service Modes, Error Codes, and Fault Finding

Index of this chapter:

5.1 Test Points
5.2 Service Modes
5.3 Problems and Solving Tips
5.4 ComPair
5.5 The Blinking LED Procedure
5.6 Protections
5.7 Repair Tips

5.1 Test Points

This chassis is equipped with test points in the service printing. In the schematics test points are identified with a rectangle box around Fxxx or Ixxx.

Table 5-1 Test Point Overview

TEST POINT	CIRCUIT	DIAGRAM
Fxxx, Ixxx	POWER SUPPLY	A1
Fxxx, Ixxx	Deflection	A2
Fxxx, Ixxx	TUNER & IF	A3
Fxxx, Ixxx	VIDEO PROCESSING	A4
Fxxx, Ixxx	AUDIO PROCESSING	A5
Fxxx, Ixxx	AUDIO AMPLIFIER + MONO SOUND PROCESSING	A6
Fxxx, Ixxx	FRONT IO + FRONT CONTROL + HEADPHONE	A7
Fxxx, Ixxx	DVD POWER SUPPLY	A9
Fxxx, Ixxx	CRT PANEL	B1

Perform measurements under the following conditions:
- Service Default Alignment Mode.
- Video: color bar signal.
- Audio: 3 kHz left, 1 kHz right.

5.2 Service Modes

Service Default Alignment Mode (SDAM) offers several features for the service technician.

There is also the option of using ComPair, a hardware interface between a computer (see requirements) and the TV chassis. It offers the ability of structured trouble shooting, error code reading and software version readout for all chassis. Requirements: To run ComPair on a computer (laptop or desktop) requires, as a minimum, a 486 processor, Windows 3.1 and a CD-ROM drive. A Pentium Processor and Windows 95/98 are however preferred (see also paragraph 5.4).

Table 5-2 SW Cluster

SW Cluster	Software name	UOC type	UOC Diversity	Special Features
L3SLM1	L03LM1 x.y	TDA9370	55K ROM Size	Trinorma Mono
L3SLM1	L03LM1 x.y	TDA9377	55K ROM Size	NTSC Mono
L3SLS1	L03LS1 x.y	TDA9370	55K ROM Size	Trinorma BTSC SAP Stereo
L3SLS1	L03LS1 x.y	TDA9377	55K ROM Size	NTSC BTSC SAP Stereo
Abbreviations in Software name: L = Latam, M = Mono, S = Stereo.				

5.2.1 Service Default Alignment Mode (SDAM)

Purpose
- To change option settings.
- To create a predefined setting to get the same measurement results as given in this manual.
- To display / clear the error code buffer.
- To override SW protections.
- To perform alignments.
- To start the blinking LED procedure.

Specifications
- Tuning frequency: 61.25 MHz (channel 3) for NTSC-sets (LATAM).
- Color system: PAL-M for LATAM BI/TRI/FOUR-NORMA.
- All picture settings at 50 % (brightness, color contrast, hue).
- Bass, treble and balance at 50 %; volume at 25 %.
- All service-unfriendly modes (if present) are disabled, like:
  - (Sleep) timer,
  - Child/parental lock,
  - Blue mute,
  - Hotel/hospitality mode
  - Auto switch-off (when no “IDENT” video signal is received for 15 minutes),
  - Skip / blank of non-favorite presets / channels,
  - Auto store of personal presets,
  - Auto user menu time-out.
- Operation hours counter.
- Software version.
- Option settings.
- Error buffer reading and erasing.
- Software alignments.

How to activate SDAM

Use one of the following methods:
- Use a standard customer RC-transmitter and key in the code 062596 directly followed by the “M” (menu) button or
- Temporarily connect jumper wire 9257 to pin 4 of 7200 on the mono carrier (see Fig. 8-1) and apply AC power. Then press the power button (remove the connection after start-up).
  Caution: Activating SDAM by temporarily connecting jumper wire 9257 to pin 4 of 7200 will override the +8V-protection. Do this only for a short period. When doing this, the service-technician must know exactly what he is doing, as it could lead to damaging the set.
- Or via ComPair.

After activating SDAM, the following screen is visible, with S at the upper right side for recognition.

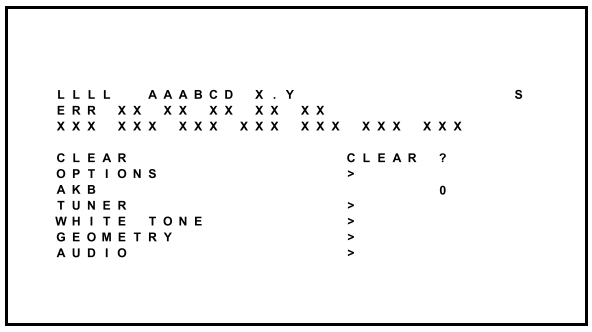

Figure 5-1 SDAM Menu

- **LLLL.** This is the operation hours counter. It counts the normal operation hours, not the standby hours.

- **AAABCD-X.Y.** This is the software identification of the main micro controller:
  - A = the project name (L03).
  - B = the region: E= Europe, A= Asia Pacific, U= NAFTA, L= LATAM.
  - C = the feature of software diversity: N = stereo non-DBX, S = stereo dBx, M = mono, D = DVD
  - D = the language cluster number:
  - X = the main software version number.
  - Y = the sub software version number.
- **S.** Indication of the actual mode. S= SDAM= Service Default Alignment mode.
- **ERR.** The error buffer. Five errors possible.
- **OPTION BYTES.** Seven codes possible.
- **CLEAR.** Erase the contents of the error buffer. Select the CLEAR menu item and press the CURSOR RIGHT key. The content of the error buffer is cleared.
- **OPTIONS.** To set the Option Bytes. See chapter 8.3.1 for a detailed description.
- **AKB.** Disable (0) or enable (1) the “black current loop” (AKB = Auto Kine Bias).
- **TUNER.** To align the Tuner. See chapter 8.3.2 for a detailed description.
- **WHITE TONE.** To align the White Tone. See chapter 8.3.3 for a detailed description.
- **GEOMETRY.** To align the set geometry. See chapter 8.3.4 for a detailed description.
- **AUDIO.** Use default value (Stereo set only), align when necessary. See chapter 8.3.5 for a detailed description.

How to navigate
- In SDAM, select menu items with the CURSOR UP/DOWN key on the remote control transmitter. The selected item will be highlighted. When not all menu items fit on the screen, move the CURSOR UP/DOWN key to display the next / previous menu items.
- With the CURSOR LEFT/RIGHT keys, it is possible to:
  - Activate the selected menu item.
  - Change the value of the selected menu item.
  - Activate the selected submenu.
- When you press the MENU button twice, the set will switch to the normal user menus (with the SDAM mode still active in the background). To return to the SDAM menu press the OSD / STATUS button.
- When you press the MENU key in a submenu, you will return to the previous menu.

How to store settings
To store settings, leave the SDAM mode with the Standby button on the remote.

How to exit
Switch the set to STANDBY by pressing the power button on the remote control (if you switch the set 'off' by removing the AC power, the set will return in SDAM when AC power is re-applied). The error buffer is **not** cleared.

5.3 Problems and Solving Tips

5.3.1 Picture Problems

Note: Below described problems are all related to the TV settings. The procedures to change the value (or status) of the different settings are described.

No colors / noise in picture
1. Press the MENU button on the remote control.
2. Select the INSTALLATION sub menu.
3. Select and change the SYSTEM setting until picture and sound are correct.
4. Select the STORE menu item.

Colors not correct / unstable picture
1. Press the MENU button on the remote control.
2. Select the INSTALLATION sub menu.
3. Select and change the SYSTEM setting until picture and sound are correct.
4. Select the STORE menu item.

Picture too dark or too bright
Increase / decrease the BRIGHTNESS and / or the CONTRAST value when:
- The picture improves after you have pressed the “Smart Picture” button on the remote control.

The new “Personal” preference value is automatically stored.

White line around picture elements and text
Decrease the SHARPNESS value when:
- The picture improves after you have pressed the “Smart Picture” button on the remote control.

The new “Personal” preference value is automatically stored.

Snowy picture
- No or bad antenna signal. Connect a proper antenna signal.
- Antenna not connected. Connect the antenna.
- No channel / pre-set is stored at this program number. Go to the INSTALL menu and store a proper channel at this program number.
- The tuner is faulty (in this case the CODES line will contain error number 10). Check the tuner and replace / repair if necessary.

Snowy picture and/or unstable picture
- A scrambled or decoded signal is received.

Black and white picture
Increase the COLOR value when:
- The picture improves after you have pressed the “Smart Picture” button on the remote control.

The new “Personal” preference value is automatically stored.

Menu text not sharp enough
Decrease the CONTRAST value when:
The picture improves after you have pressed the “Smart Picture” button on the remote control.
The new “Personal” preference value is automatically stored.

5.3.2 Sound Problems

No sound or sound too loud (after channel change / switching on)
Increase / decrease the VOLUME level.
Press the Smart Sound button repeatedly to access 4 different types of sound settings and choose your desired setting.

5.4 ComPair

5.4.1 Introduction

ComPair (Computer Aided Repair) is a service tool for Philips Consumer Electronics products. ComPair is a further development on the European DST (Dealer Service Tool), which allows faster and more accurate diagnostics. ComPair has three big advantages:
- ComPair helps you to quickly get an understanding on how to repair the chassis in a short time by guiding you systematically through the repair procedures.
- ComPair allows very detailed diagnostics (on I2C level) and is therefore capable of accurately indicating problem areas. You do not have to know anything about I2C commands yourself because ComPair takes care of this.
- ComPair speeds up the repair time since it can automatically communicate with the chassis (when the

microprocessor is working) and all repair information is directly available. When ComPair is installed together with the SearchMan electronic manual of the defective chassis, schematics and PWBs are only a mouse click away.

5.4.2 Specifications

ComPair consists of a Windows based faultfinding program and an interface box between PC and the (defective) product. The ComPair interface box is connected to the PC via a serial or RS232 cable.
In case of the L03 chassis, the ComPair interface box and the TV communicate via a bi-directional service cable via the service connector (located on the Main panel, see also figure 8-1 suffix D).

The ComPair faultfinding program is able to determine the problem of the defective television. ComPair can gather diagnostic information in two ways:

- **Automatically** (by communication with the television): ComPair can automatically read out the contents of the entire error buffer. Diagnosis is done on I2C level. ComPair can access the I2C bus of the television. ComPair can send and receive I2C commands to the micro controller of the television. In this way, it is possible for ComPair to communicate (read and write) to devices on the I2C busses of the TV-set.
- **Manually** (by asking questions to you): Automatic diagnosis is only possible if the micro controller of the television is working correctly and only to a certain extend. When this is not the case, ComPair will guide you through the faultfinding tree by asking you questions (e.g. *Does the screen give a picture? Click on the correct answer: YES / NO*) and showing you examples (e.g. *Measure test-point F001 and click on the correct oscillogram you see on the oscilloscope*). You can answer by clicking on a link (e.g. text or a waveform picture) that will bring you to the next step in the faultfinding process.

By a combination of automatic diagnostics and an interactive question / answer procedure, ComPair will enable you to find most problems in a fast and effective way.

Beside fault finding, ComPair provides some **additional features** like:

- Up- or downloading of pre-sets.
- Managing of pre-set lists.
- If both ComPair and SearchMan (Electronic Service Manual) are installed, all the schematics and the PWBs of the set are available by clicking on the appropriate hyperlink. **Example**: *Measure the DC-voltage on capacitor C2568 (Schematic/Panel) at the Mono-carrier.*
  - Click on the 'Panel' hyperlink to automatically show the PWB with a highlighted capacitor C2568.
  - Click on the 'Schematic' hyperlink to automatically show the position of the highlighted capacitor.

5.4.3 How To Connect ComPair

1. First install the ComPair Browser software (see the Quick Reference Card for installation instructions).
2. Connect the RS232 interface cable between a free serial (COM) port of your PC and the PC connector (marked with “PC”) of the ComPair interface.
3. Connect the AC power adapter to the supply connector (marked with “POWER 9V DC”) on the ComPair interface.
4. Switch the ComPair interface OFF.
5. Switch the television set OFF (remove the AC power).
6. Connect the ComPair interface cable between the connector on the rear side of the ComPair interface (marked with “I2C”) and the ComPair connector on the mono carrier (see figure 8-1 suffix D).
7. Plug the AC power adapter in the AC power outlet and switch on the interface. The green and red LEDs light up together. The red LED extinguishes after approx. 1 second while the green LED remains lit.
8. Start the ComPair program and read the “introduction” chapter.

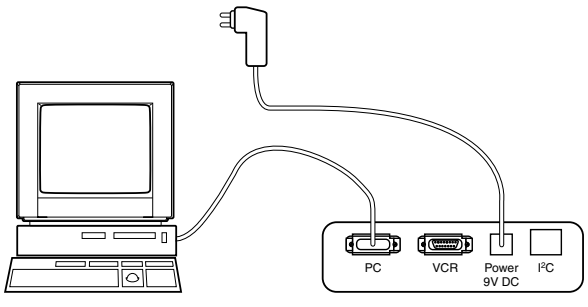

Figure 5-2 ComPair connection

5.4.4 How To Order

ComPair order codes:

- Starter kit ComPair32/SearchMan32 software and ComPair interface (excl. transformer): 3122 785 90450.
- ComPair interface (excluding transformer): 4822 727 21631.
- Starter kit ComPair32 software (registration version): 3122 785 60040.
- Starter kit SearchMan32 software: 3122 785 60050.
- ComPair32 CD (update): 3122 785 60070.
- SearchMan32 CD (update): 3122 785 60080 (year 2002), 3122 785 60120 (year 2003). **Note:** If you encounter any problems, contact your local support desk.
- ComPair interface cable: 3122 785 90004.

5.4.5 Error Buffer

The error code buffer contains all detected errors since the last time the buffer was erased. The buffer is written from left to right. When an error occurs that is not yet in the error code buffer, it is written at the left side and all other errors shift one position to the right.

5.4.6 How To Read The Error Buffer

You can read out the error buffer in 3 ways:

- On screen via the SDAM (only if you have a picture). Examples:
  - ERROR: 0 0 0 0 0: No errors detected
  - ERROR: 6 0 0 0 0: Error code 6 is the last and only detected error
  - ERROR: 9 6 0 0 0: Error code 6 was first detected and error code 9 is the last detected (newest) error
- Via the blinking LED procedure (when you have no picture). See next paragraph.
- Via ComPair.

5.4.7 How To Clear The Error Buffer

The error code buffer is cleared in the following cases:

- By activation of the CLEAR command in the SDAM menu:
- If the content of the error buffer has not changed for 50 hours, it resets automatically.

Note:
When leaving SDAM by disconnecting the set from AC power, the error buffer is not reset.

5.4.8 Error Codes

In case of non-intermittent faults, clear the error buffer before you begin the repair. These to ensure that old error codes are no longer present. It is wise to write down the errors of the error buffer before you clear it.
If possible, check the entire contents of the error buffer. In some situations an error code is only the result of another error code and not the actual cause (e.g., a fault in the protection detection circuitry can also lead to a protection).

Table 5-3 Error Code Table

ERROR	Device	Error description	Check item	Diagram
0	Not applicable	No Error	-	-
1	Not applicable	X-Ray Protection (USA)	-	-
2	Not applicable	Horizontal Protection	7421, 7422, 7423	A2
3	Not applicable	Vertical Protection	7461, 7462, 7463, 7464, 7465, 7466	A2
4	AN5891K & AN5829S	Tone control & Audio processor I2C identification error	7821 (tone IC), 7841 (Stereo/Sap)	A5
5	TDA93XX	POR 3.3V / 8V Protection	7200, 7541, 7491, 7493, 7496	A4, A1
6	I2C bus	General I2C bus error	7200, 3604, 3605	A4
7	Not applicable	-	-	-
8	Not applicable	E/W Protection (Large Screen)	-	-
9	M24C16	NVM I2C identification error	7641, 3641, 3642, 3643	A4
10	Tuner	Tuner I2C identification error	1000, 3003, 3004	A3
11	Not applicable	Black current loop protection	3313, 7307, 7308, 7309, 7310, 7311, 7312, 7313, 7314, 7315, 7316, 7317, 7318, CRT	B1
12	Not applicable	MAP I2C identification error (USA)	-	-
13	Not applicable	VC I2C identification error (Eu)	-	-
14	Not applicable	DVD I2C identification error	-	-

5.5 The Blinking LED Procedure

Via this procedure you can make the contents of the error buffer visible via the front LED. This is especially useful when there is no picture.

When the SDAM is activated, the LED will blink the contents of the error-buffer.
- n short blinks (n = 1 - 14),
- When all the error-codes are displayed, the sequence finishes with a LED blink of 3 s,
- The sequence starts again.

Example of error buffer: 12 9 6 0 0
After activating SDAM:
- 12 short blinks followed by a pause of 3 s,
- 9 short blinks followed by a pause of 3 s,
- 6 short blinks followed by a pause of 3 s,
- 1 long blink of 3 s to finish the sequence,
- the sequence starts again.

5.6 Protections

If a fault situation is detected an error code will be generated and if necessary the set will be put in the protection mode. Blinking of the red LED at a frequency of 3 Hz indicates the protection mode. In some error cases the microprocessor does not put the set in the protection mode. The error codes of the error buffer can be read via the service menu (SDAM), the blinking LED procedure or via ComPair.

To get a quick diagnosis the chassis has one service mode implemented:
- The Service Default Alignment Mode (SDAM). Start-up of the set in a predefined way and adjustment of the set via a menu and with the help of test patterns.

5.7 Repair Tips

Below some failure symptoms are given, followed by a repair tip.
- **Set is dead and makes hiccupping sound.** “MainSupply” is available. Hiccupping stops when de-soldering L5563, meaning that problem is in the “MainSupply” line. No output voltages at LOT, no horizontal deflection. Reason: line transistor 7421 is defective.
- **Set is dead, and makes no sound.** Check power supply IC 7520. Result: voltage at pins 2, 6, 7, 9 and 11 are about 180 V and pin 14 is 0 V. The reason why the voltage on these pins is so high is because the output driver (pin 11) has an open load. That is why MOSFET 7521 is not able to switch. Reason: feedback resistor 3523 is defective.
  Caution: be careful measuring on the gate of 7521; circuitry is very high ohmic and can easily be damaged!
- **Set is in hiccup mode and shuts down after 8 s.** Blinking LED (set in SDAM mode) indicates error 5. As it is unlikely that the “POR” and “+8V protection” happen at the same time, measure the “+8V”. If this voltage is missing, check transistor 7491 & 7496.
- **Set is non-stop in hiccup mode.** Set is in over current mode; check the secondary sensing (opto coupler 7515) and the “MainSupply” voltage. Signal “Stdby_con” must be logic low under normal operation conditions and goes to high (3.3 V) under standby and fault conditions.
- **Set turns on, but without picture and sound.** The screen shows snow, but OSD and other menus are okay. Blinking LED procedure indicates error 11, so problem is expected in the tuner (pos. 1000). Check presence of supply voltages. As “Vlotaux+5V” at pin 5 and 7 are okay, “VT_supply” at pin 9 is missing. Conclusion: resistors 3449 & 3450 are defective

6. Block Diagrams, Testpoint Overviews, and Waveforms

Block Diagram

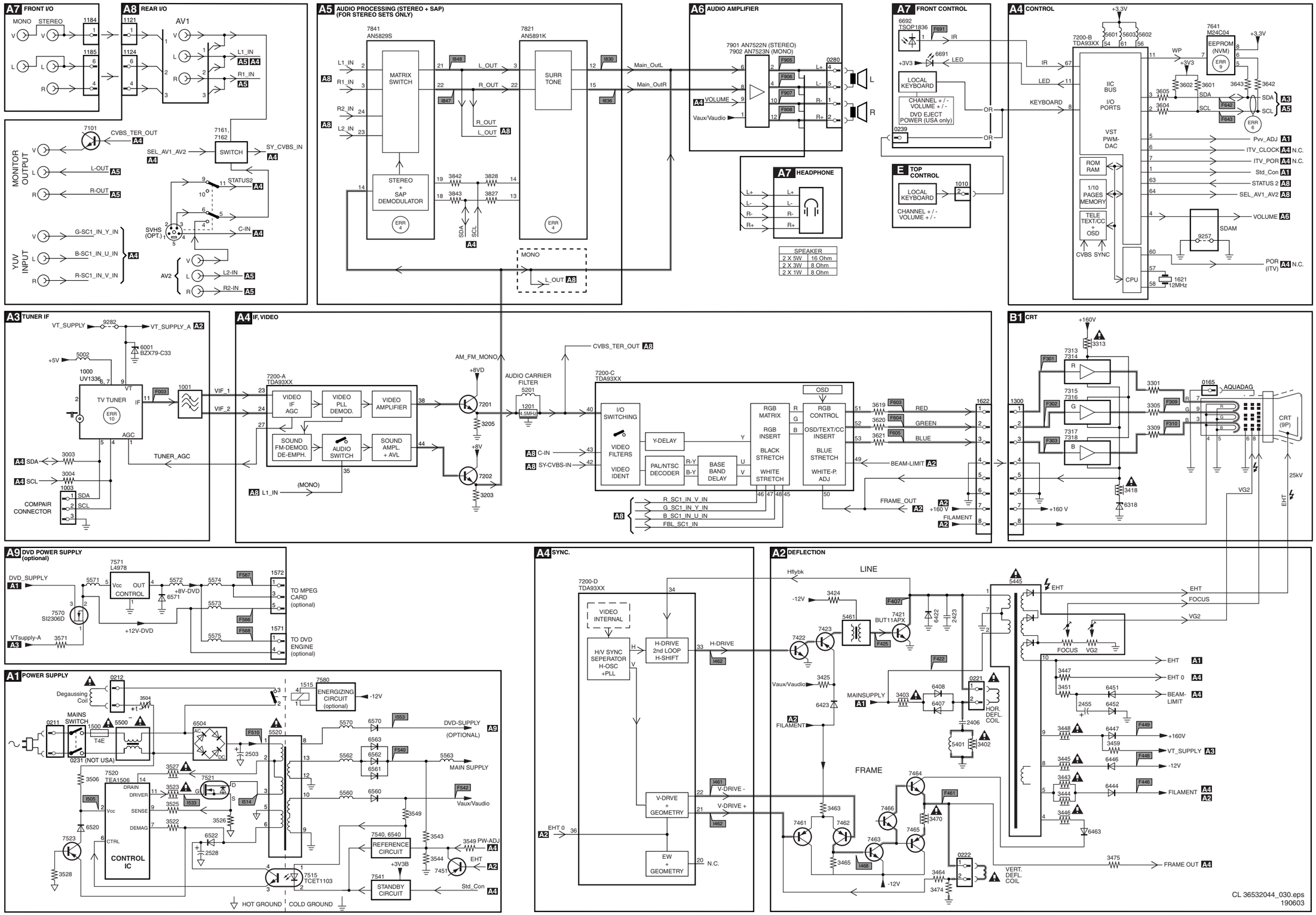

I2C and Supply Voltage Overview

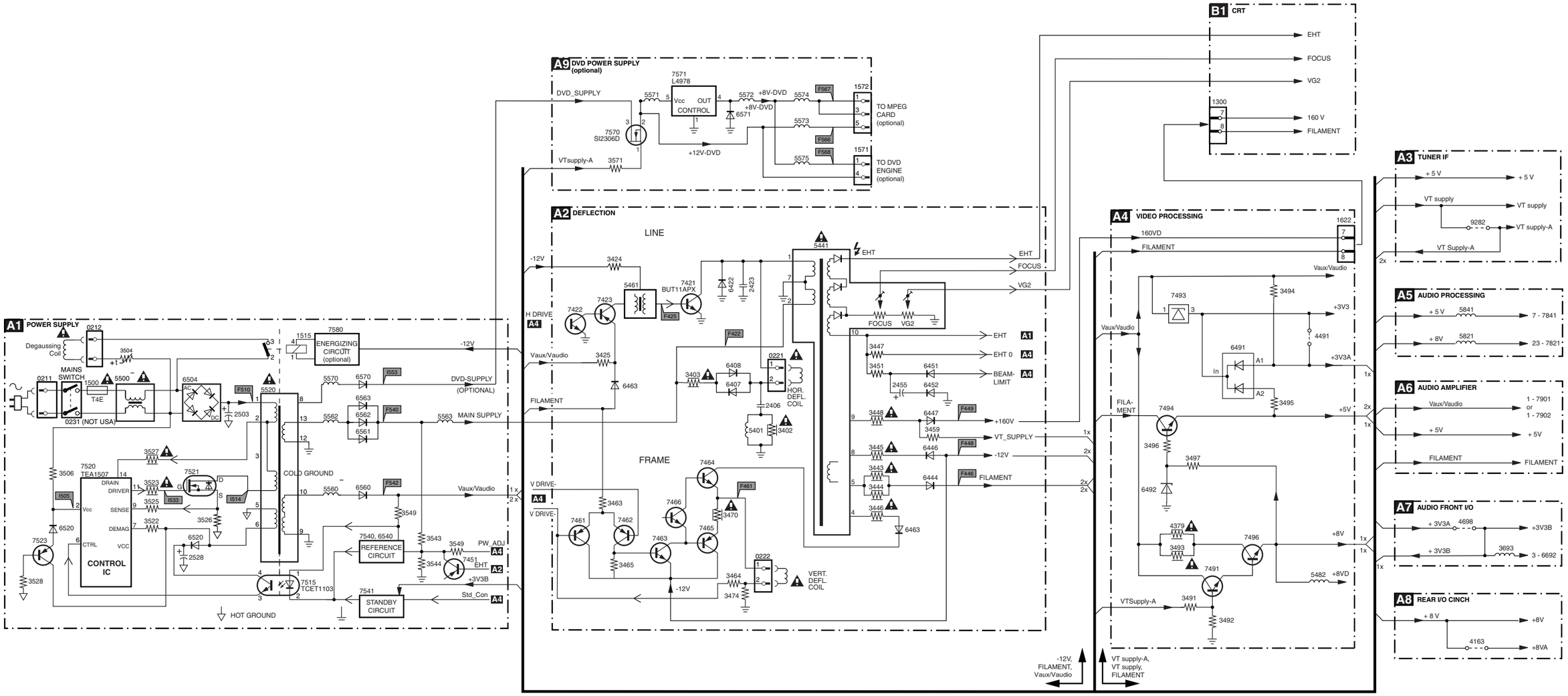

ERROR CODE LIST

Error	Device	Error description	Check item	Diagram
0	Not applicable	No Error	-	-
1	Not applicable	X-Ray Protection (USA)	-	-
2	Not applicable	Horizontal Protection	7421, 7422, 7423	A2
3	Not applicable	Vertical Protection	7461, 7462, 7463, 7464, 7465, 7466	A2
4	AN5891K & AN5829S	Tone control & Audio processor I2C identification error	7821 (tone IC), 7841 (Stereo/Sap)	A5
5	TDA93XX	POR 3.3V / 8V Protection	7200, 7541, 7491, 7493, 7496	A4, A1
6	I2C bus	General I2C bus error	7200, 3604, 3605	A4
7	Not applicable	-	-	-
8	Not applicable	E/W Protection (Large Screen)	-	-
9	M24C16	NVM I2C identification error	7641, 3641, 3642, 3643	A4
10	Tuner	Tuner I2C identification error	1000, 3003, 3004	A3
11	Not applicable	Black current loop protection	3313, 7307, 7308, 7309, 7310, 7311, 7312, 7313, 7314, 7315, 7316, 7317, 7318, CRT	B1
12	Not applicable	MAP I2C identification error (USA)	-	-
13	Not applicable	VC I2C identification error (Eu)	-	-
14	Not applicable	DVD I2C identification error	-	-

I2C BUS INTERCONNECTION DIAGRAM

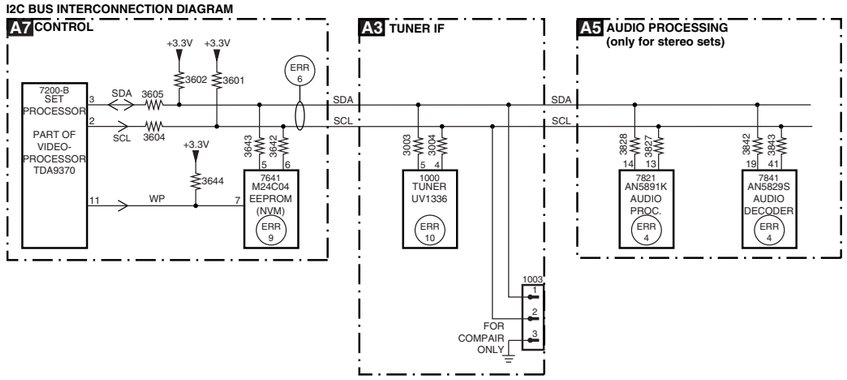

CL 36532044_032.eps
160603

Testpoint Overview

MONO CARRIER TRACK SIDE VIEW

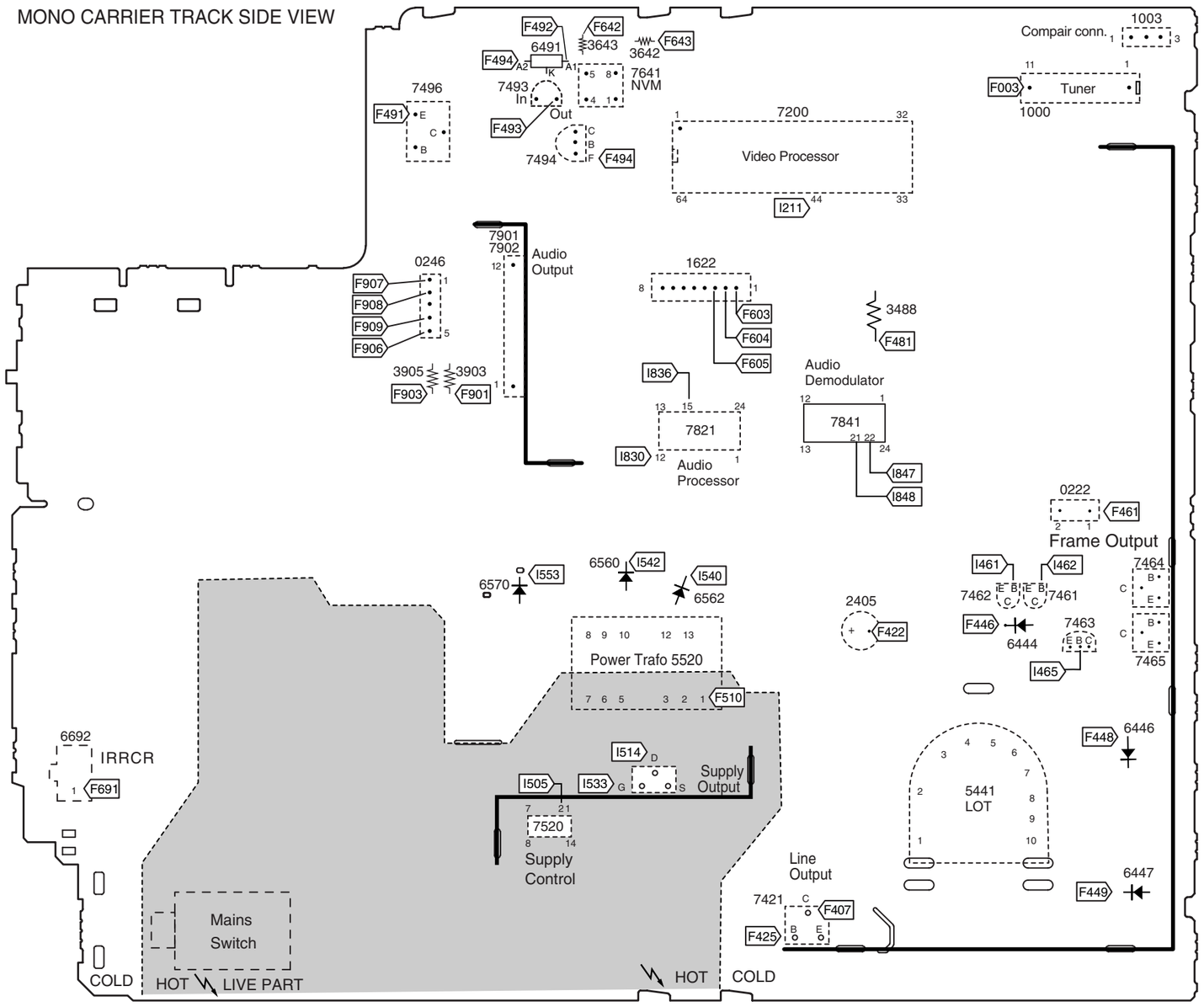

CRT TRACK SIDE VIEW

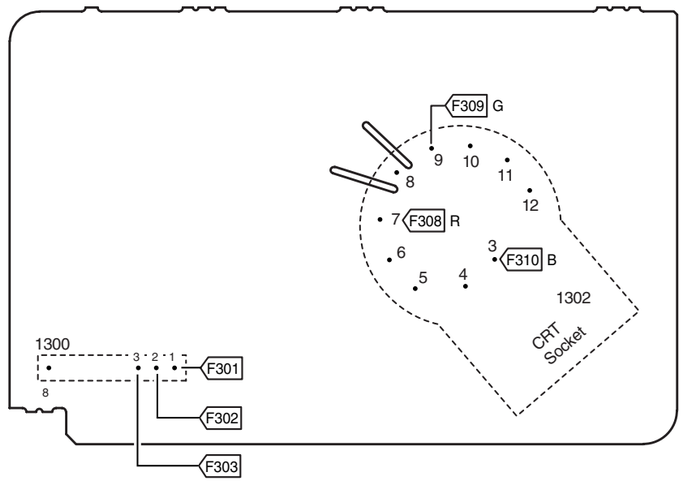

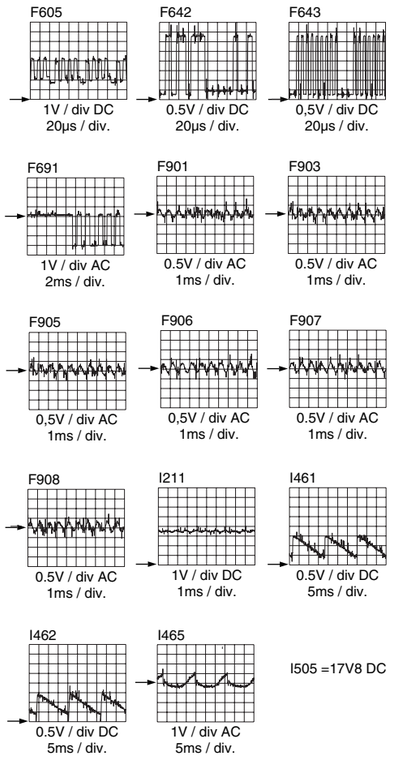

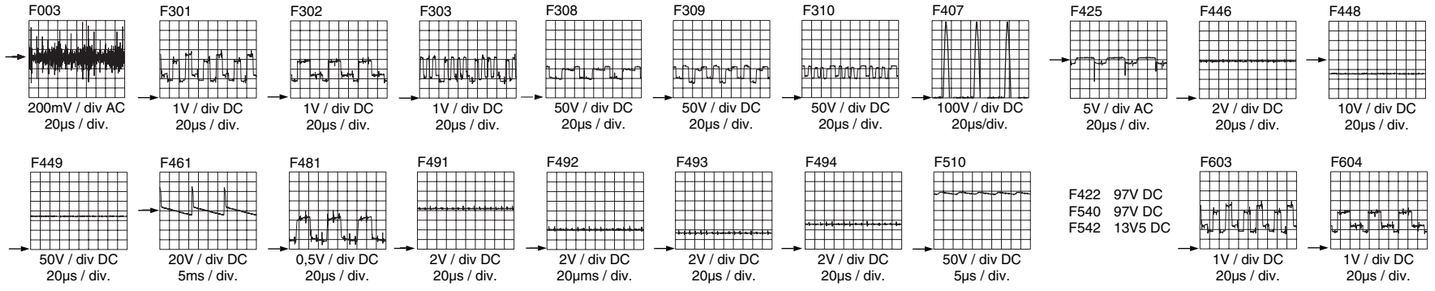

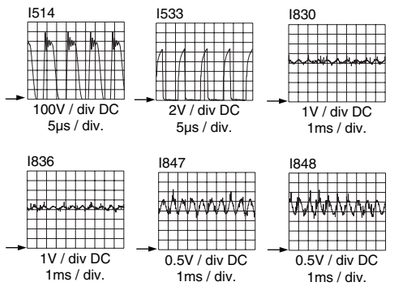

CL 36532044_031.eps
200603

7. Circuit Diagrams and PWB Layouts

Mono Carrier: Power Supply

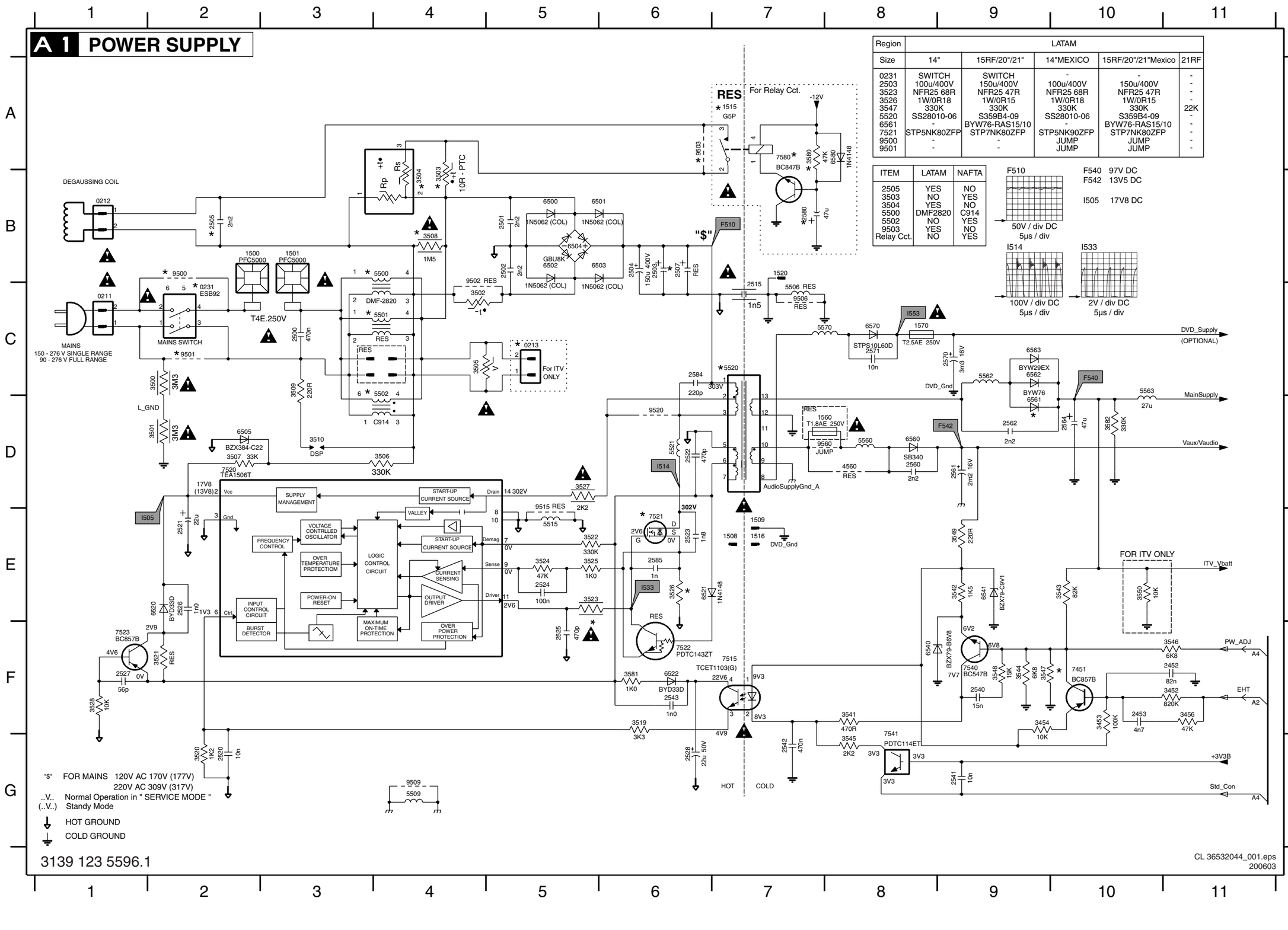

Region	LATAM				
Size	14"	15RF/20"/21"	14"MEXICO	15RF/20"/21"Mexico	21RF
0231	SWITCH	SWITCH	-	-	-
2503	100u/400V	150u/400V	100u/400V	150u/400V	-
3523	NFR25 68R	NFR25 47R	NFR25 68R	NFR25 47R	-
3526	1W/0R18	1W/0R15	1W/0R18	1W/0R15	-
3547	330K	330K	330K	330K	22K
5520	SS28010-06	S359B4-09	SS28010-06	S359B4-09	-
6561	-	BYW76-RAS15/10	-	BYW76-RAS15/10	-
7521	STP5NK80ZFP	STP7NK80ZFP	STP5NK90ZFP	STP7NK80ZFP	-
9500	-	-	JUMP	JUMP	-
9501	-	-	JUMP	JUMP	-

ITEM	LATAM	NAFTA
2505	YES	NO
3503	NO	YES
3504	YES	NO
5500	DMF2820	C914
5502	NO	YES
9503	YES	NO
Relay Cct.	NO	YES

0211 C1	5520 C7	6580 A8	9509 G4
0212 B1	5521 D6	6581 B8	9515 E5
0213 C5	5560 D8	7451 F10	
0231 C2	5562 C9	7515 F7	
1500 B2	5563 C10	7520 A7	
1501 B3	5570 C7	7521 F6	
1508 E7	6500 B5	7522 F6	
1509 E7	6501 B5	7523 C9	
1515 A7	6502 B5	7540 A8	
1516 E7	6503 B5	7541 F8	
1520 B7	6504 B5	7580 A8	
1560 D7	6505 D2	9500 B2	
1570 C8	6520 E2	9501 C2	
2452 F11	6521 E6	9502 C4	
2453 F10	6522 F6	9503 A6	
2500 C3	6540 F8	9506 C7	
2501 B5	6541 E9	9509 G4	
2502 B5	6560 D8	9515 E5	
2503 B6	6561 D9		
2504 B6	6562 C9		
2505 B2	6563 C9		
2507 B6	6570 C8		
2515 C7	6580 A8		
2520 G2	7451 F10		
2521 E2	7515 F7		
2522 D6	7520 D2		
2523 E6	7521 E6		
2524 E5	7522 F6		
2525 F5	7523 F1		
2526 E2	7540 F9		
2527 F1	7541 G8		
2528 G6	7580 A7		
2540 F9	9500 B2		
2541 G9	9501 C2		
2542 G7	9502 C4		
2543 F6	9503 A6		
2560 D8	9506 C7		
2561 D9	9509 G4		
2562 D9	9515 E5		
2564 D10	9520 D6		
2570 C9	9560 D7		
2571 C8			
2580 B7			
2584 C6			
2585 E6			
3452 F11			
3453 F10			
3454 F9			
3456 F11			
3500 C2			
3501 D2			
3502 C4			
3503 B4			
3504 B4			
3505 C4			
3506 D4			
3507 D2			
3508 B4			
3509 C3			
3510 D3			
3519 F6			
3520 G2			
3521 F2			
3522 E5			
3523 E5			
3524 E5			
3525 E5			
3526 E6			
3527 D5			
3528 F1			
3541 F8			
3542 E9			
3543 E10			
3544 F9			
3545 G8			
3546 F11			
3547 F9			
3548 F9			
3549 E9			
3550 E10			
3580 A7			
3581 F6			
3582 D10			
4560 D8			
5500 B4			
5501 C4			
5502 D4			
5506 C7			
5509 G4			
5515 E5			

CL 36532044_001.eps
200603

Mono Carrier: Deflection

A2 DEFLECTION

Line Deflection

Region	LATAM			
Size Tube	14" LPD	15RF CPT	20" LPD	21"FSQ LPD
	LINE DEFLECTION			
2406	-	360n/250V	-	-
2408	560n/250V	-	680n/250V	560n/250V
2423	13n/1K6V	13n/1K6V	15n/1K6V	15n/1K6V
2424	1n/2KV	-	1n5/2KV	1n/2Kv
2441	22n	15n	15n	33n
2452	-	10n	22n	100n
2453	-	-	2n2	-
2457	-	-	-	470p/500V
3402	-	NFR25H 2K2	-	NFR25H 2K2
3441	47K	10K	10K	56K
3442	150K	150K	150K	100K
3447	220K	100K	100K	220K
3451	680R	8K2	1K8	8K2
3455	470R	2K2	2K2	2K2
3456	-	-	47K	-
3460	100K	47K	47K	47K
3646	1M	-	1M	-
5401	68u/LHL08	-	33u/LHL08	-
5402	-	00425/82u	-	00511/33u
5441	JF0501-19255	JF0501-19255	JF0501-19255	JF0501-19276

Region	LATAM			
Size Tube	14" LPD	15RF CPT	20" LPD	21"FSQ LPD
	LINE DEFLECTION			
3473	4R7	2R2	3R3	3R3
3474	4R7	3R9	3R9	3R3

Frame Deflection

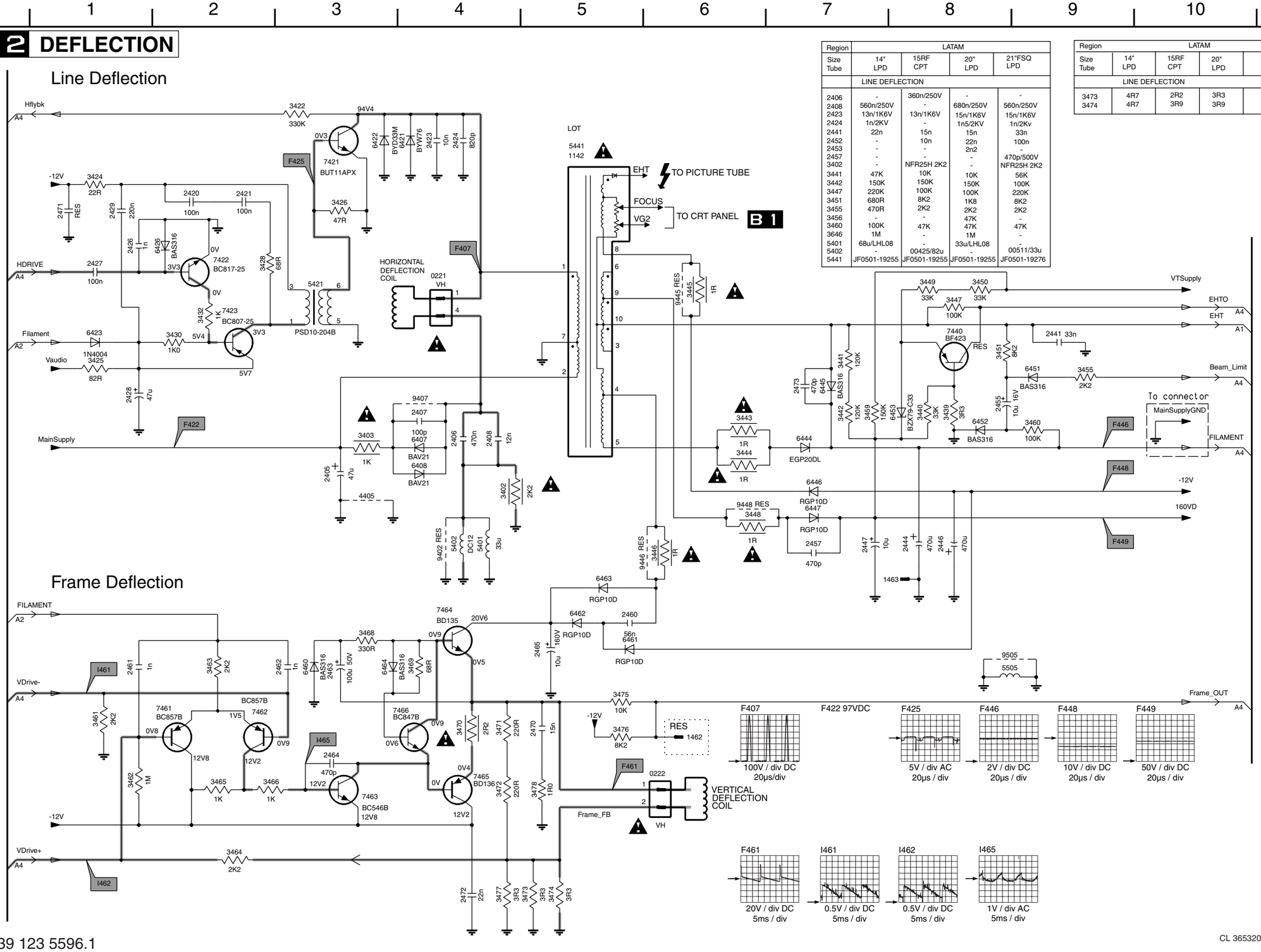

3139 123 5596.1

CL 36532044_002.eps
200603

0221 B4 6452 C8
0222 F6 6453 C8
1462 F6 6460 E3
1463 E7 6461 E5
2405 D3 6462 E5
2406 D4 6463 E5
2407 C4 6464 E3
2408 D4 7421 A3
2420 B2 7422 B2
2421 B2 7423 C2
2423 A4 7440 C8
2424 A4 7461 F2
2426 B1 7462 F2
2427 B1 7463 F3
2428 C1 7464 E4
2429 B1 7465 F4
2441 C9 7466 F3
2444 D8 9402 D4
2446 D8 9407 C4
2447 D7 9445 B6
2455 C8 9446 E6
2457 D7 9448 D6
2460 E5 9505 F8
2461 E1
2462 E3
2463 E3
2464 F3
2465 E5
2470 F5
2471 B1
2472 G4
2473 C7
3402 D4
3403 D3
3422 A3
3424 A1
3425 C1
3426 B3
3428 B2
3430 C2
3432 C2
3439 C8
3440 C8
3441 C7
3442 C7
3443 C6
3444 D6
3445 B6
3446 D6
3447 B8
3448 D6
3449 B8
3450 B8
3451 C8
3455 C9
3459 C7
3460 C9
3461 F1
3462 F1
3463 E2
3464 G2
3465 F2
3466 F2
3468 E3
3469 E4
3470 F4
3471 F4
3472 F4
3473 G5
3474 G5
3475 F5
3476 F5
3477 G4
3478 F5
4405 D3
5401 D4
5402 D4
5421 B3
5441 A5
5505 F8
6407 D4
6408 D4
6421 A4
6422 A3
6423 C1
6426 B2
6444 D7
6445 C7
6446 D7
6447 D7
6451 C9

Mono Carrier: Tuner IF

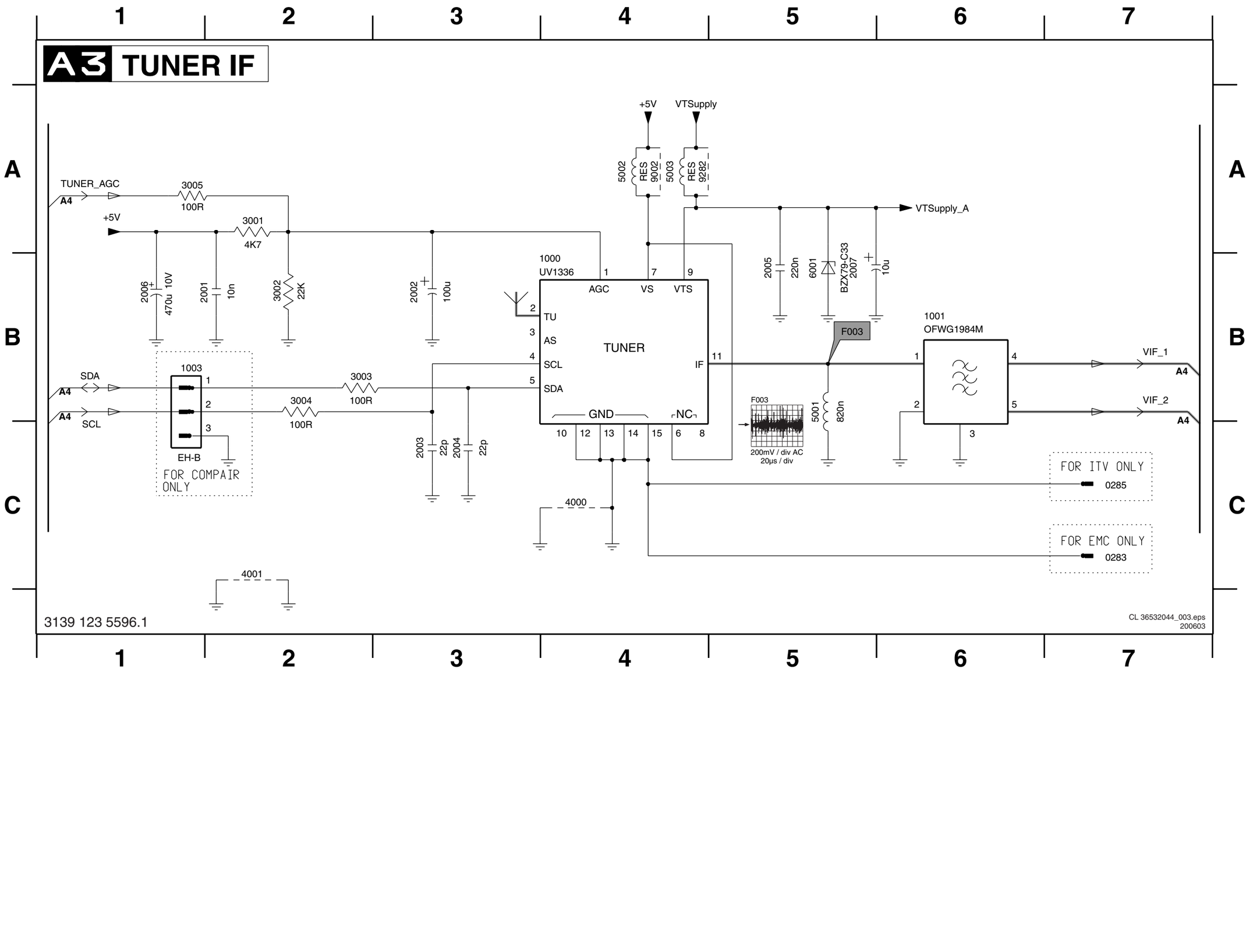

0283 C7
0285 C7
1000 B3
1001 B6
1003 B1
2001 B2
2002 B3
2003 C3
2004 C3
2005 B5
2006 B1
2007 B5
3001 A2
3002 B2
3003 B2
3004 B2
3005 A1
4000 C4
4001 C2
5001 B5
5002 A4
5003 A4
6001 B5
9002 A4
9282 A4

Mono Carrier: Video Processing

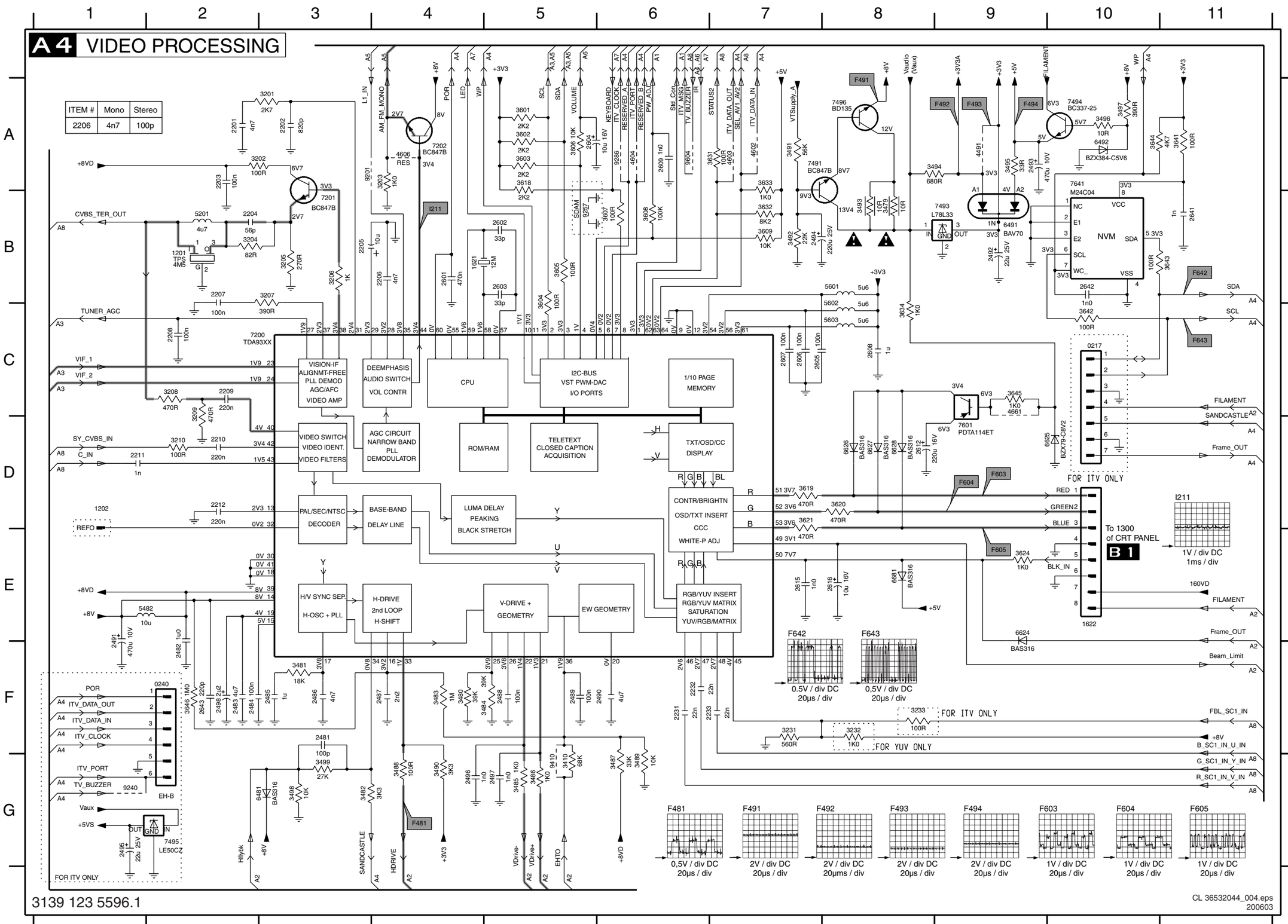

0217 C10	3606 A5
0240 F2	3607 B6
1201 B2	3608 B6
1202 D1	3609 B7
1621 B4	3618 A5
1622 E10	3619 D7
2201 A2	3620 D8
2202 A3	3621 D7
2203 A2	3624 E9
2204 B2	3631 A7
2205 B3	3632 B7
2206 B4	3633 A7
2207 B2	3634 C8
2208 C2	3641 A11
2209 C2	3642 C10
2210 D2	3643 B11
2211 D1	3644 A10
2212 D2	3645 C9
2231 F6	3646 F2
2232 F6	4491 A9
2233 F7	4602 A7
2481 F3	4603 A7
2482 F2	4604 A6
2483 F2	4606 A4
2484 F2	4661 C9
2485 F3	5201 B2
2486 F3	5482 E1
2487 F4	5601 B8
2488 F5	5602 C8
2489 F5	5603 C8
2490 F6	6481 G3
2491 E1	6491 B9
2492 B9	6492 A10
2493 A9	6624 E9
2494 B7	6625 D10
2495 G1	6626 D8
2496 G4	6627 D8
2497 G5	6628 D8
2498 F2	6681 E8
2601 B4	7200 C2
2602 B5	7201 B3
2603 B5	7202 A4
2604 A5	7491 A7
2605 C7	7493 B9
2606 C7	7494 A10
2607 C7	7495 G2
2608 C8	7496 A8
2609 A6	7601 D9
2612 D8	7641 A10
2615 E7	9201 A3
2616 E8	9240 G1
2641 B11	9286 A6
2642 B10	9410 G5
2643 F2	9604 A6
3201 A3	
3202 A2	
3203 A4	
3204 B2	
3205 B3	
3206 B3	
3207 B3	
3208 C2	
3209 C2	
3210 D2	
3231 F7	
3232 F8	
3233 F8	
3410 G5	
3479 B8	
3480 F4	
3481 F3	
3482 G3	
3483 F4	
3484 F5	
3485 G5	
3486 G5	
3487 G6	
3488 G4	
3489 G6	
3490 G4	
3491 A7	
3492 B7	
3493 B8	
3494 A8	
3495 A9	
3496 A10	
3497 A10	
3498 G3	
3499 G3	
3601 A5	
3602 A5	
3603 A5	
3604 B5	
3605 B5	

Mono Carrier: Audio Processing (Stereo + SAP)

A5 AUDIO PROCESSING (STEREO + SAP)

AUDIO SOUND PROCESSOR

SOUND MULTIPLEX DECODER

ITEM	MONO	BTSC STEREO
4841	---	JMP
4842	---	JMP
4845	JMP	---

I830: 1V / div DC, 1ms / div

I836: 1V / div DC, 1ms / div

I847: 0.5V / div DC, 1ms / div

I848: 0.5V / div DC, 1ms / div

3139 123 5596.1

CL 36532044_005.eps
200603

Mono Carrier: Audio Amplifier + Mono Sound Processing

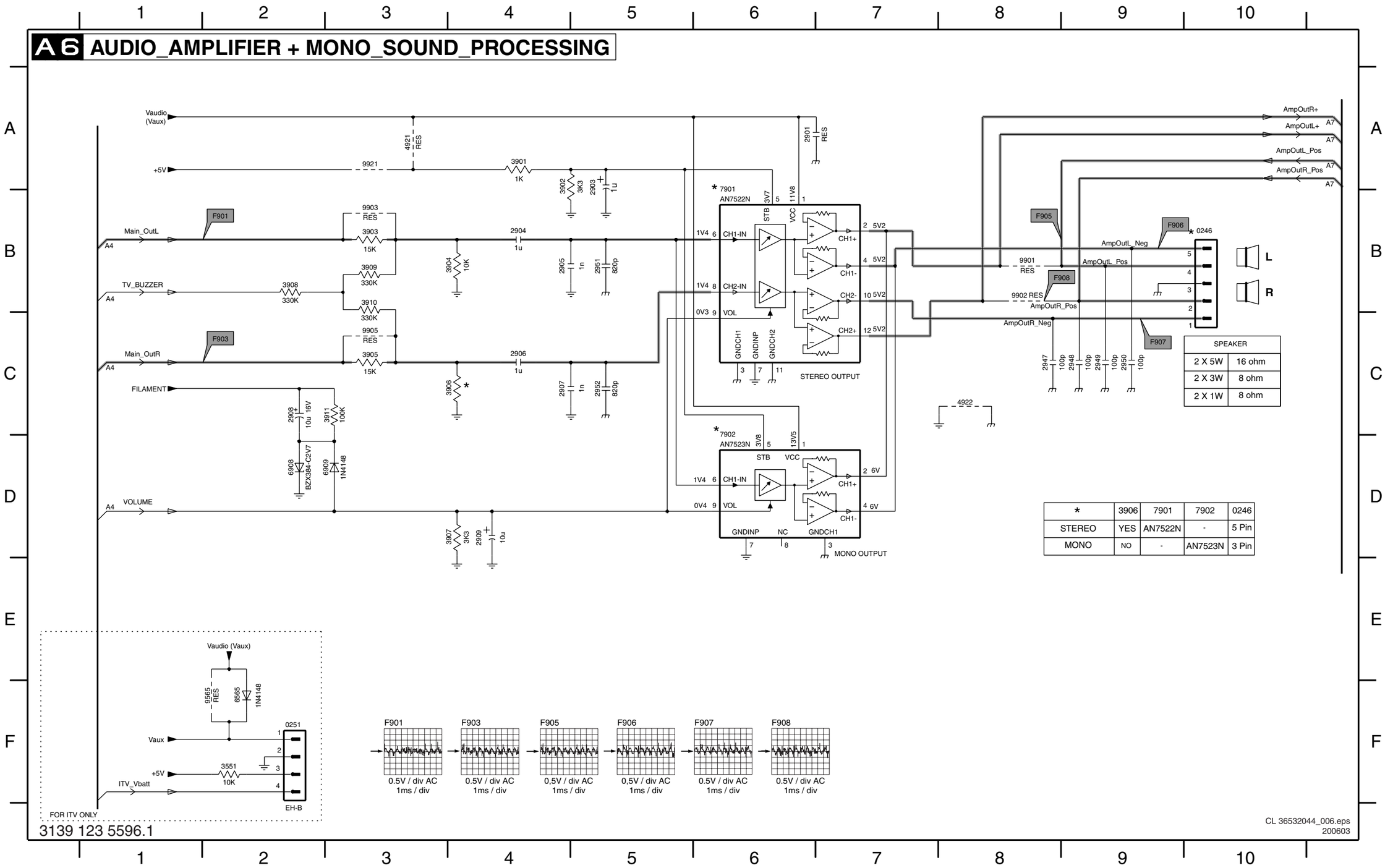

SPEAKER	
2 X 5W	16 ohm
2 X 3W	8 ohm
2 X 1W	8 ohm

*	3906	7901	7902	0246
STEREO	YES	AN7522N	-	5 Pin
MONO	NO	-	AN7523N	3 Pin

0246 B10
0251 F2
2901 A6
2903 A5
2904 B4
2905 B4
2906 C4
2907 C4
2908 C2
2909 D4
2947 C8
2948 C9
2949 C9
2950 C9
2951 B5
2952 C5
3551 F2
3901 A4
3902 A4
3903 B3
3904 B4
3905 C3
3906 C4
3907 D4
3908 B2
3909 B3
3910 B3
3911 C3
4921 A3
4922 C8
6565 F2
6908 D2
6909 D3
7901 B6
7902 D6
9565 F2
9901 B8
9902 B8
9903 B3
9905 C3
9921 A3

3139 123 5596.1

Mono Carrier: Font I/O + Front Control + Headphone

A7 FRONT IO + FRONT CONTROL + HEADPHONE

FRONT CINCH

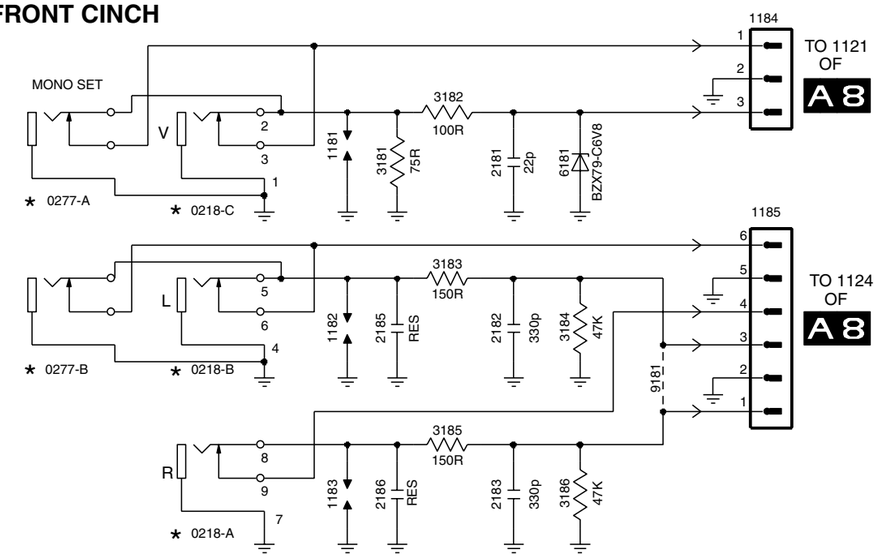

ITEM	MONO	STEREO
0218	NO	YES
0277	YES	NO

HEADPHONE

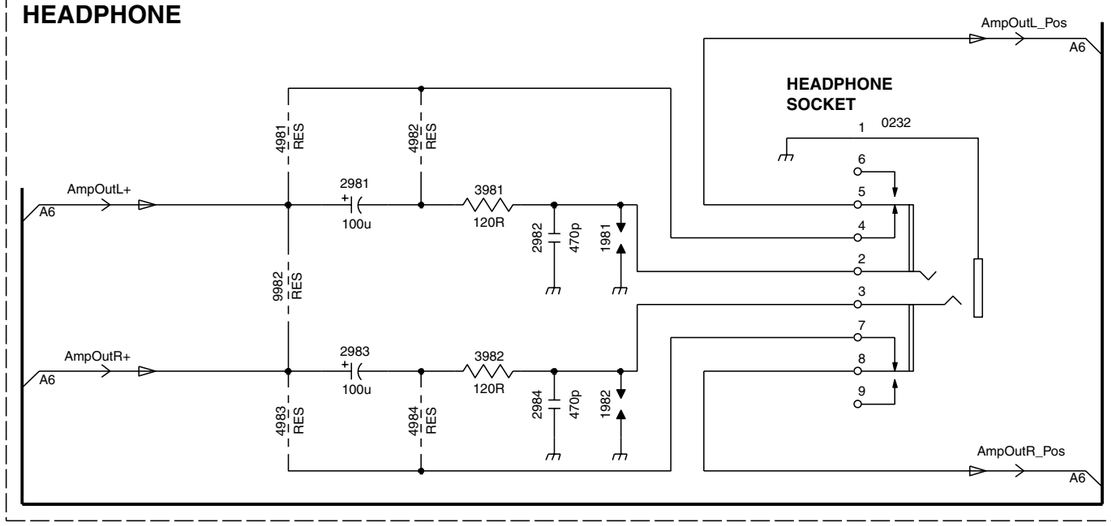

FRONT CONTROL

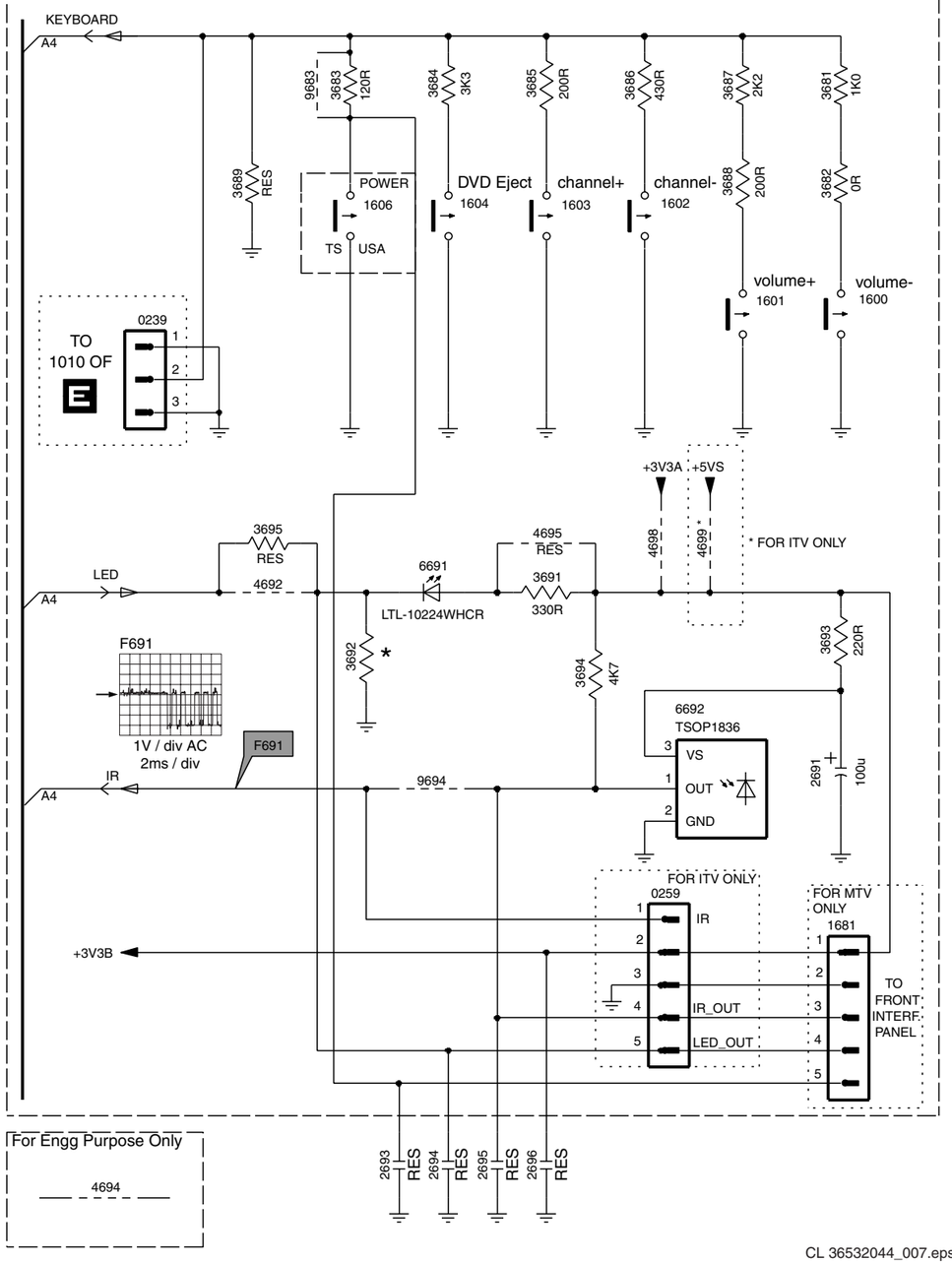

For Engg Purpose Only

4694

3139 123 5596.1

CL 36532044_007.eps
200603

0218-A C1
0218-B B1
0218-C B1
0232 E4
0239 B6
0259 E8
0277-A B1
0277-B B1
1181 A2
1182 B2
1183 C2
1184 A4
1185 B4
1600 B9
1601 B9
1602 B8
1603 B8
1604 B8
1606 B7
1681 E9
1981 E3
1982 F3
2181 A3
2182 B3
2183 C3
2185 B2
2186 C2
2691 D9
2693 F7
2694 F7
2695 F8
2696 F8
2981 E2
2982 E3
2983 F2
2984 F3
3181 A2
3182 A2
3183 B2
3184 B3
3185 C2
3186 C3
3681 A9
3682 B9
3683 A7
3684 A7
3685 A8
3686 A8
3687 A9
3688 B9
3689 B6
3691 D8
3692 D7
3693 D9
3694 D8
3695 C7
3981 E2
3982 F2
4692 D7
4694 F6
4695 C8
4698 C8
4699 C9
4981 E2
4982 E2
4983 F2
4984 F2
6181 A3
6691 D7
6692 D8
9181 B3
9683 A7
9694 D7
9982 E2

Mono Carrier: Rear I/O Cinch

A8 REAR I/O CINCH

MONITOR OUTPUT 0223-D
YUV INPUT 0223-C
AV1 INPUT 0223-B
AV2 INPUT ** 0223-A
SVHS INPUT **
SET WITH VIDEO OUT
FOR ITV ONLY
For ITV Only 1119 To SPLS Panel
For ITV Only 1116 To 1125
For ITV Only 1117 To 1126
For ITV Only 1118 To 1127
For ITV Only 1125 To 1116
For ITV Only 1126 To 1117, 1124
For ITV Only 1127 To 1118
FOR 1184 OF A7
FOR 1185 OF A7
(FOR SETS WITH 9 +3 P CINCH)
(FOR SETS WITH AV1 & SVHS ONLY)
SET W/O SVHS
0225-A
0225-B
EH-B
CVBS_TER_OUT
L_OUT
R_OUT
G_SC1_IN_Y_IN
B_SC1_IN_U_IN
R_SC1_IN_V_IN
FBL_SC1_IN
L2_IN
R2_IN
C_IN
SEL_AV1_AV2
SY_CVBS_IN
STATUS2
L1_IN
R1_IN
ITV_MSG
+8V
+8VA
GND

** AV2 and SVHS inputs NOT for LATAM

3139 123 5596 .1

CL 36532044_008.eps
200603

0223-A A10	3154 A4	4112 C4	9102 C2
0223-B E1	3155 B4	4113 D4	9103 C2
0223-C C1	3156 B5	4121 F2	9121 F1
0223-D A1	3157 B5	4122 F2	9125 F5
0224 A6	3158 B4	4123 F5	9126 E5
0225-A D10	3159 B5	4124 G2	
0225-B D10	3161 D7	2125 F5	
0229 F9	3162 D7	2127 F2	
0242 E2	3163 D7	2128 G2	
0262 G5	3164 D7	2131 B8	
1101 A2	4101 B1	2132 B7	
1102 B2	4102 B2	2133 B8	
1103 B2	4104 B1	2134 B7	
1104 C2	4105 B1	2135 C8	
1105 C2	4112 C4	2136 D8	
1106 D2	4114 C4	2137 B9	
1107 F1	4116 D4	2138 B9	
1108 F1	4121 C9	2141 E9	
1109 G1	4122 F3	2161 D6	
1110 A9	4123 F3	2163 D8	
1111 B9	4124 G3	3101 A3	
1112 B9	4126 F5	3102 A3	
1113 C9	4127 F5	3103 B3	
1114 D9	4128 E5	3104 B3	
1115 E9	4129 E2	3105 B3	
1116 C3	4131 C9	3106 B3	
1117 C3	4132 E5	3111 C2	
1118 D3	4133 A7	3112 C4	
1119 A2	4151 B4	3113 C2	
1121 E3	4152 B5	3114 C4	
1122 F4	4161 E7	3115 D2	
1124 F3	4162 E8	3116 D4	
1125 E2	4163 G2	3121 F2	
1126 F3	4164 G2	3122 E2	
1127 G3	6127 F3	3123 F2	
2101 A3	6151 A4	3124 F2	
2102 A3	6152 A5	3125 F2	
2103 B3	6161 D8	3126 G2	
2104 B3	7101 A4	3131 B8	
2105 B4	7151 A5	3132 B8	
2106 B4	7152 B4	3133 B8	
2107 B2	7161 D7	3134 B8	
2108 B2	7162 D7	3135 C9	
2111 C4	9101 D2	3136 C8	
2112 C4	9102 C2	3137 D9	
2113 D4	9103 C2	3138 D8	
2121 F2	9121 F1	3141 E9	
2122 F2	9125 F5	3151 C4	
2123 F5	9126 E5	3152 C4	
2124 G2		3153 D4	

Mono Carrier: Diversity Table for Rear I/O Cinch

Diversity Table For A8 Rear IO Cinch

ITEM	CN-R.11/10-YUV-F.11-ST-LA/NA	CN-R.11/10-F.11-MN-LA L03S	CN-R.11/10-YUV-ST-LA/NA L03S	CN-F.11-ST-LA/NA L03S	CN-F.11-MN-LA	CN-R.11/10-MN-LA
2101	470N	470N	470N	-	-	470N
2102	22P	22P	22P	-	-	22P
2103	330P	330P	330P	-	-	330P
2104	330P	-	330P	-	-	-
2105	10U	10U	10U	-	-	10U
2106	10U	-	10U	-	-	-
2111	22P	-	22P	-	-	-
2112	22P	-	22P	-	-	-
2113	22P	-	22P	-	-	-
2121	-	-	22P	-	-	22P
2122	-	-	330P	-	-	330P
2123	-	1U	1U	1U	1U	1U
2124	-	-	330P	-	-	-
2125	1U	-	1U	1U	-	-
2132	1U	-	1U	1U	-	-
2134	1U	-	1U	1U	-	-
2181	22P	22P	-	22P	22P	-
2182	330P	330P	-	330P	330P	-
2183	330P	-	-	330P	-	-
2210	220N	220N	220N	220N	220N	220N
2211	1N	-	1N	1N	-	1N
2231	22N	-	22N	22N	-	22N
2232	22N	-	22N	22N	-	22N
2233	22N	-	22N	22N	-	22N
2842	JMP	-	JMP	-	-	-
2843	JMP	JMP	JMP	-	-	JMP
3101	68R	68R	68R	-	-	68R
3102	1K	1K	1K	-	-	1K
3103	150R	150R	150R	-	-	150R
3104	220K	220K	220K	-	-	220K
3105	150R	-	150R	-	-	-
3106	220K	-	220K	-	-	-
3111	75R	-	75R	-	-	-
3112	100R	-	100R	-	-	-
3113	75R	-	75R	-	-	-
3114	100R	-	100R	-	-	-
3115	75R	-	75R	-	-	-
3116	100R	-	-	-	-	75R
3121	-	-	100R	-	-	100R
3122	JMP	JMP	150R	-	-	150R
3123	JMP	JMP	47K	-	-	47K
3124	-	-	150R	-	-	-
3125	JMP	-	47K	-	-	-
3126	-	-	-	-	-	-
3181	75R	75R	-	75R	75R	-
3182	100R	100R	-	100R	100R	-
3183	150R	150R	-	150R	150R	-
3184	47K	47K	-	47K	47K	-
3185	150R	-	-	150R	-	-
3186	47K	-	-	47K	-	-
3210	100R	100R	100R	100R	100R	100R
3231	560R	-	560K	560R	-	560R
3232	1K	-	1K	1K	-	1K
4101	-	JMP	-	-	-	JMP
4102	-	-	-	-	-	-
4104	-	JMP	-	-	-	JMP
4122	-	-	JMP	-	-	JMP
4123	-	-	JMP	-	-	JMP
4124	-	-	JMP	-	JMP	-
4126	JMP	JMP	JMP	JMP	-	JMP
4127	JMP	-	JMP	JMP	-	-
4129	JMP	JMP	JMP	-	-	JMP
4132	JMP	-	JMP	JMP	-	-
4133	JMP	-	JMP	JMP	-	-
4151	JMP	JMP	JMP	-	-	JMP
4152	JMP	-	JMP	-	-	-
4161	JMP	JMP	JMP	JMP	JMP	JMP
6127	-	-	BZX79-C6V8	-	-	BZX384-C6V8
6181	BZX79-C6V8	BZX79-C6V8	-	BZX79-C6V8	BZX79-C6V8	-
7101	BC847B	BC847B	BC847B	-	-	BC847B
9101	JMP	-	JMP	-	-	-
9102	JMP	-	JMP	-	-	-
9103	JMP	-	JMP	-	-	-
9125	JMP	JMP	JMP	JMP	JMP	JMP

3139 123 5596.1

CL 36532044_009.eps
200603

Mono Carrier: DVD Power Supply (Optional)

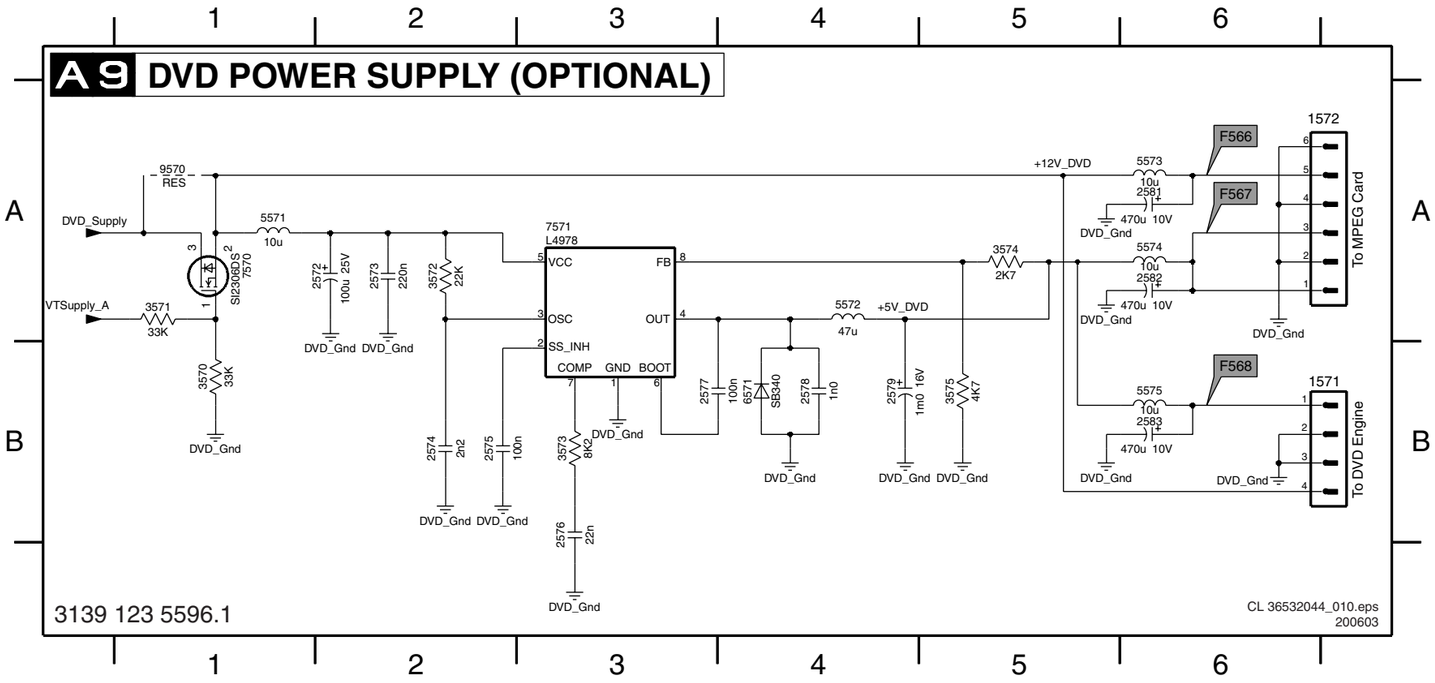

1571 B6
1572 A6
2572 A2
2573 A2
2574 B2
2575 B2
2576 B3
2577 B3
2578 B4
2579 B4
2581 A6
2582 A6
2583 B6
3570 B1
3571 A1
3572 A2
3573 B3
3574 A5
3575 B5
5571 A1
5572 A4
5573 A6
5574 A6
5575 B6
6571 B4
7570 A1
7571 A3
9570 A1

Layout Mono Carrier: Top Side

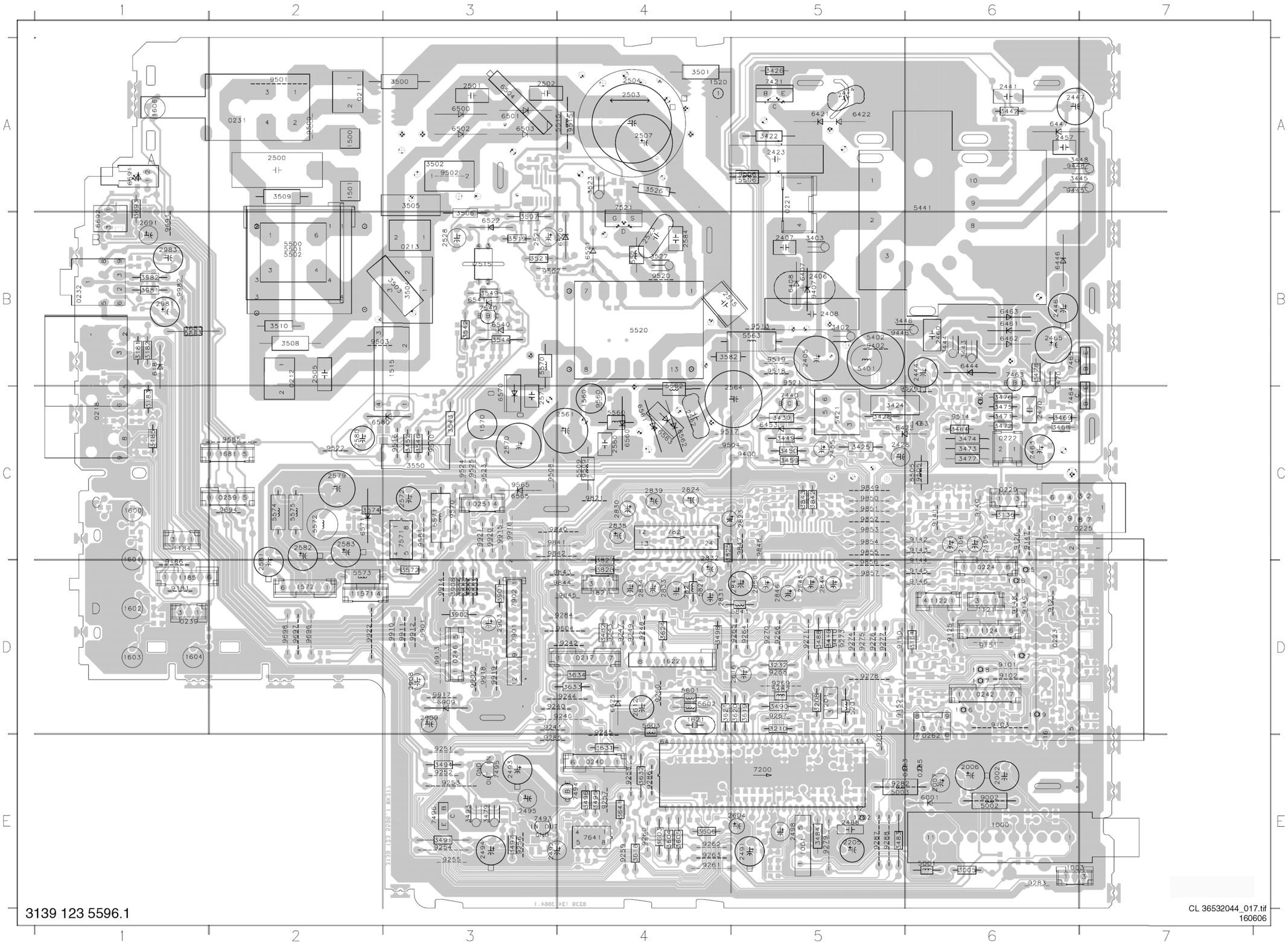

3139 123 5596.1

CL 36532044_017.tif
160606

Mapping Mono Carrier: Top Side

0211	A2	2002	E6	2839	C4	3502	A3	5520	B4	7821	C4	9284	D4	9901	D3				
0212	B2	2006	E6	2844	D5	3503	B3	5521	B4	7901	D3	9285	E3	9902	D3				
0213	B3	2007	E6	2845	D5	3504	B3	5560	C4	7902	D3	9286	E4	9903	D3				
0217	D4	2105	C6	2846	D5	3505	A3	5562	B4	9002	E6	9287	E5	9905	D3				
0218	C1	2106	C6	2847	D5	3506	B3	5563	B5	9101	D6	9288	E5	9910	D3				
0221	A5	2205	E5	2850	D5	3507	B3	5570	B3	9102	D6	9400	C5	9911	D3				
0222	C6	2405	B5	2903	D3	3508	B2	5571	C3	9103	D6	9402	B5	9912	D3				
0223	D6	2406	B5	2908	D3	3509	A2	5572	C2	9121	D6	9407	B5	9913	D3				
0224	D6	2407	B5	2909	D3	3510	B2	5573	D2	9125	D6	9410	D5	9914	D3				
0225	C7	2408	B5	2981	B1	3519	B3	5574	C2	9126	C6	9445	A6	9915	C3				
0229	C6	2423	A5	2983	B1	3521	B3	5575	C2	9140	C6	9446	B5	9916	C3				
0231	A2	2424	A5	3005	E6	3523	A4	5601	D4	9141	C6	9448	A6	9917	D3				
0232	B1	2428	C5	3136	C6	3526	A4	5602	D4	9142	C6	9500	A2	9918	D3				
0239	D1	2441	A6	3164	D6	3527	B4	5603	D4	9143	C6	9501	A2	9919	D3				
0240	E4	2444	B6	3181	B1	3542	B3	5821	D4	9144	D6	9502	A3	9920	C3				
0242	D6	2446	B6	3182	B1	3543	C3	5841	D5	9145	D6	9503	B2	9921	C3				
0246	D3	2447	A6	3183	C1	3544	B3	6001	E6	9146	D6	9504	C4	9922	D2				
0251	C3	2455	C5	3185	C1	3546	C3	6181	B1	9147	C6	9505	C6	9982	B1				
0259	C2	2457	A6	3208	D5	3549	B3	6407	B5	9148	D6	9506	A5						
0262	E6	2460	B6	3210	D5	3550	C3	6408	B5	9149	D6	9507	B3						
0277	B1	2463	C6	3232	D5	3572	D3	6421	A5	9150	D5	9508	C3						
0283	E5	2465	B6	3402	B5	3574	C2	6422	A5	9151	D6	9509	C4						
0285	E6	2470	C6	3403	B5	3582	B4	6423	C5	9152	D5	9510	C3						
1000	E6	2488	E5	3410	D5	3603	E4	6444	B6	9181	D1	9513	B5						
1001	E5	2491	E5	3422	A5	3604	E4	6446	B6	9186	D1	9514	C6						
1003	E6	2492	E3	3424	C5	3605	E4	6447	A6	9201	E5	9515	A4						
1116	D6	2493	E3	3425	C5	3606	E4	6453	C5	9240	D3	9516	C3						
1117	D6	2494	E3	3426	A5	3618	E4	6461	B6	9241	D3	9517	C4						
1118	D6	2495	E3	3428	C5	3619	D5	6462	B6	9242	D4	9518	B5						
1119	D6	2498	E5	3439	C5	3620	D5	6463	B6	9243	D4	9519	B5						
1121	D6	2500	A2	3442	A6	3621	D4	6500	A3	9244	D4	9520	B4						
1122	D6	2501	A3	3443	B6	3624	D4	6501	A3	9245	D4	9521	B5						
1124	D6	2502	A3	3444	B6	3631	E4	6502	A3	9246	D4	9522	C2						
1125	D6	2503	A4	3445	A6	3632	E4	6503	A3	9247	D4	9523	C3						
1126	D6	2504	A4	3446	B5	3633	D4	6504	A3	9248	D4	9524	C3						
1127	D6	2505	B2	3448	A6	3634	D4	6520	B4	9249	D4	9525	C3						
1184	C1	2507	A4	3449	C5	3641	E4	6521	B4	9250	D4	9526	C6						
1185	D1	2515	B4	3450	C5	3683	B1	6522	B3	9251	E3	9560	C4						
1201	D5	2521	B3	3452	C3	3693	A1	6540	B3	9252	E3	9565	C3						
1202	E5	2523	B4	3459	C5	3825	C4	6541	B3	9253	E3	9570	C3						
1462	C6	2528	B3	3464	C6	3827	D4	6560	C4	9254	E3	9581	C3						
1463	C6	2560	C4	3468	C6	3828	D4	6561	C4	9255	E3	9604	D4						
1500	A2	2561	C4	3469	C6	3842	C5	6562	C4	9256	E3	9683	B1						
1501	A2	2562	C4	3470	B6	3843	C5	6563	C4	9257	E4	9685	C2						
1508	B4	2564	C5	3471	C6	3901	D3	6565	C3	9258	E4	9691	B1						
1509	B4	2570	C3	3472	C6	3902	D3	6570	C3	9259	E4	9694	C2						
1515	B3	2571	C3	3473	C6	3903	D3	6571	C2	9260	E4	9696	D2						
1516	B4	2572	C3	3474	C6	3905	D3	6580	C2	9261	E4	9697	D2						
1520	A4	2579	C2	3475	C6	3908	D3	6625	D4	9262	E4	9698	D2						
1521	B2	2580	C2	3476	C6	3981	B1	6691	A1	9263	E4	9821	C4						
1522	B2	2581	D2	3477	C6	3982	B1	6692	B1	9264	D5	9840	C4						
1523	B2	2582	C2	3478	B6	5001	E6	6909	D3	9265	D5	9841	C3						
1524	B2	2583	C2	3479	E3	5002	E6	7200	E5	9266	D5	9842	C3						
1560	C4	2584	B4	3482	D4	5003	E5	7421	A5	9267	D5	9843	D4						
1570	C3	2604	E5	3483	E5	5201	D5	7440	C5	9268	D5	9844	D4						
1571	D2	2612	D4	3484	E5	5401	B5	7463	B6	9269	D5	9845	D4						
1572	D2	2616	D5	3488	D5	5402	B5	7464	C6	9270	D5	9847	C5						
1600	C1	2691	B1	3490	D5	5421	C5	7465	B6	9271	D5	9848	C5						
1601	C1	2821	D4	3491	E3	5441	A6	7493	E3	9273	D5	9849	C5						
1602	D1	2823	C5	3493	E3	5482	D5	7494	E4	9274	D5	9850	C5						
1603	D1	2824	C4	3494	E3	5500	B2	7495	E3	9275	D5	9851	C5						
1604	D1	2830	C4	3495	E4	5501	B2	7496	E3	9276	D5	9852	C5						
1606	A1	2831	D4	3496	E4	5502	B2	7515	B3	9277	D5	9853	C5						
1621	D4	2832	C4	3497	E3	5505	C6	7521	A4	9278	D5	9854	C5						
1622	D4	2833	D4	3498	D4	5506	A5	7540	B3	9279	E5	9855	C5						
1681	C2	2834	D4	3500	A3	5509	C4	7571	C3	9282	E5	9856	D5						
1821	D4	2838	C4	3501	A4	5515	A4	7641	E4	9283	E6	9857	D5						

CL 36532044_17m.eps
220503

Mapping Mono Carrier: Bottom Side

2001	A6	2485	A5	2905	B3	3440	D5	3906	B3	6161	C6								
2003	A6	2486	A5	2906	B3	3441	E6	3907	B3	6426	C5								
2004	A6	2487	A5	2907	B3	3447	C5	3909	B3	6445	C5								
2005	A6	2489	A5	2947	B3	3451	C5	3910	B3	6451	C5								
2101	B6	2490	A5	2948	B3	3453	D3	3911	B3	6452	C5								
2102	A6	2496	A5	2949	B3	3454	D3	4000	A6	6460	C6								
2103	B6	2497	A5	2950	B3	3455	C5	4001	A5	6464	C6								
2104	B6	2520	D3	2951	B3	3456	C3	4101	A6	6481	B4								
2107	B7	2522	D4	2952	B3	3460	C5	4102	B6	6491	A3								
2108	B7	2524	E3	2982	D1	3461	C6	4104	B6	6492	A4								
2111	B6	2525	E3	2984	D1	3462	C6	4105	B6	6505	D3								
2112	B6	2526	D4	3001	A6	3463	D6	4112	B6	6624	B5								
2113	B6	2527	D3	3002	A6	3465	C6	4114	B6	6626	B4								
2121	B6	2540	D3	3003	A6	3466	C6	4116	B6	6627	B4								
2122	B6	2541	D3	3004	A6	3480	A5	4121	B6	6628	B4								
2123	B6	2542	D3	3101	A6	3481	A5	4122	B6	6681	B4								
2124	B6	2543	D3	3102	A6	3485	A5	4123	B6	6908	B3								
2125	B6	2573	C3	3103	B6	3486	A5	4124	B6	7101	B6								
2127	B7	2574	C2	3104	B6	3487	B5	4126	B6	7151	C6								
2128	B7	2575	C2	3105	B6	3489	A5	4127	B6	7152	C6								
2131	C6	2576	C3	3106	B6	3492	A3	4128	B6	7161	B6								
2132	C6	2577	B3	3111	B6	3499	B4	4129	B6	7162	B6								
2133	B6	2578	C2	3112	B6	3520	D3	4131	C6	7201	B5								
2134	C6	2585	E4	3113	B7	3522	D3	4132	B6	7202	B4								
2135	C6	2601	A4	3114	B6	3524	E3	4133	B6	7422	C5								
2136	C6	2602	A4	3115	B7	3525	E4	4151	C6	7423	C5								
2137	C7	2603	A4	3116	B6	3528	D3	4152	C6	7451	D3								
2138	B7	2605	A4	3121	B6	3541	D3	4161	B6	7461	C6								
2141	C6	2606	B4	3122	B6	3545	D3	4162	B6	7462	C6								
2161	B6	2607	A4	3123	B6	3547	D3	4163	B6	7466	C6								
2163	B6	2608	B4	3124	B6	3548	D3	4164	C6	7491	A3								
2181	D1	2609	A4	3125	B6	3551	C3	4405	D5	7520	E3								
2182	C1	2615	A5	3126	B6	3570	C3	4491	A3	7522	E4								
2183	C1	2641	A4	3131	C6	3571	C3	4560	C4	7523	D3								
2185	D1	2642	A4	3132	C6	3573	C3	4571	C5	7541	D3								
2186	C1	2643	A5	3133	B6	3575	C3	4602	B4	7570	C3								
2201	A5	2693	C2	3134	B6	3580	C3	4603	A4	7580	C3								
2202	A5	2694	C2	3135	C6	3581	D3	4604	A4	7601	B4								
2203	B5	2695	C2	3137	C6	3601	A4	4606	B4	7841	C5								
2204	B5	2696	C2	3138	C6	3602	A4	4610	B4										
2206	A5	2822	C4	3141	C6	3607	A4	4661	B4										
2207	A5	2825	C4	3151	A6	3608	A4	4692	C2										
2208	A5	2826	C4	3152	B6	3609	A4	4694	C1										
2209	B5	2827	C4	3153	B6	3642	A4	4695	E1										
2210	B5	2828	C4	3154	C6	3643	A4	4698	B2										
2211	B5	2829	C4	3155	C6	3644	A4	4699	B2										
2212	A5	2835	C4	3156	C6	3645	B4	4821	C5										
2231	B5	2836	C4	3157	C6	3646	A5	4822	C5										
2232	B5	2837	B4	3158	C6	3681	C1	4841	C5										
2233	B5	2841	B5	3159	C6	3682	C1	4842	C5										
2420	C5	2842	C5	3161	B6	3684	B1	4843	C5										
2421	C5	2843	C5	3162	B6	3685	B1	4844	C5										
2426	C5	2848	B5	3163	B6	3686	B1	4845	C5										
2427	C5	2849	B5	3184	C1	3687	C1	4847	B4										
2429	C6	2851	B5	3186	C1	3688	C1	4848	B4										
2452	C3	2852	B5	3201	A5	3689	B1	4849	B4										
2453	C3	2855	C5	3202	B5	3691	E1	4850	C4										
2461	C6	2856	C5	3203	B4	3692	E1	4851	C4										
2462	C6	2857	C5	3204	B5	3694	E1	4921	B3										
2464	D6	2858	C5	3205	B5	3695	C2	4922	B3										
2471	C5	2859	C5	3206	B5	3822	C4	4981	D1										
2472	D6	2860	C5	3207	A5	3823	C4	4982	D1										
2473	C5	2861	B4	3209	B5	3824	C5	4983	D1										
2481	B4	2862	B4	3231	A5	3826	C4	4984	D1										
2482	A5	2863	C5	3233	B5	3841	B5	6127	B6										
2483	A5	2901	B3	3430	C5	3852	B5	6151	C6										
2484	A5	2904	B3	3432	C5	3904	B3	6152	C6										

CL 36532044_18m.eps
220503

Layout Mono Carrier (Overview Bottom Side)

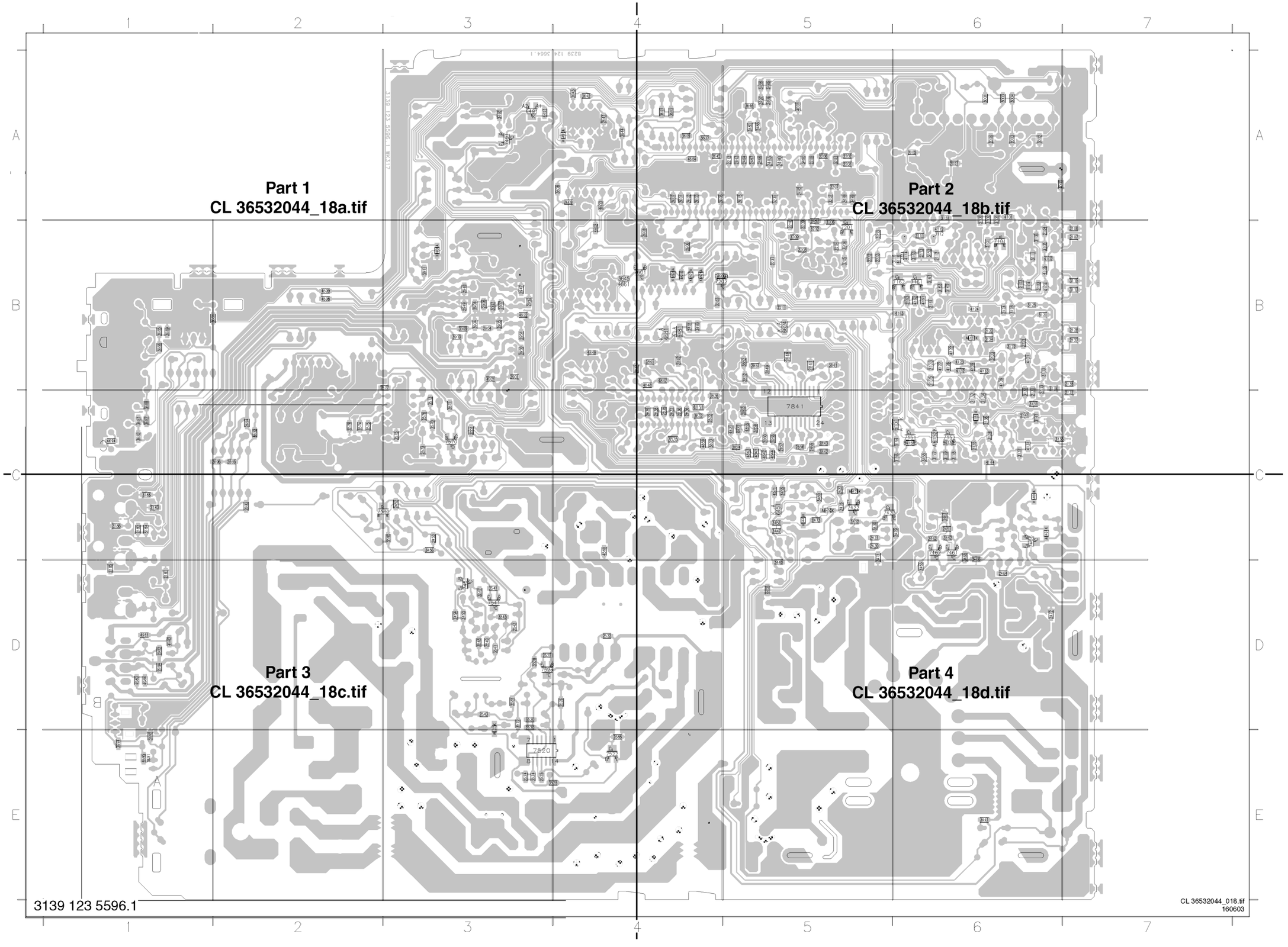

3139 123 5596.1

CL 36532044_018.tif
160603

Layout Mono Carrier (Part 1 Bottom Side)

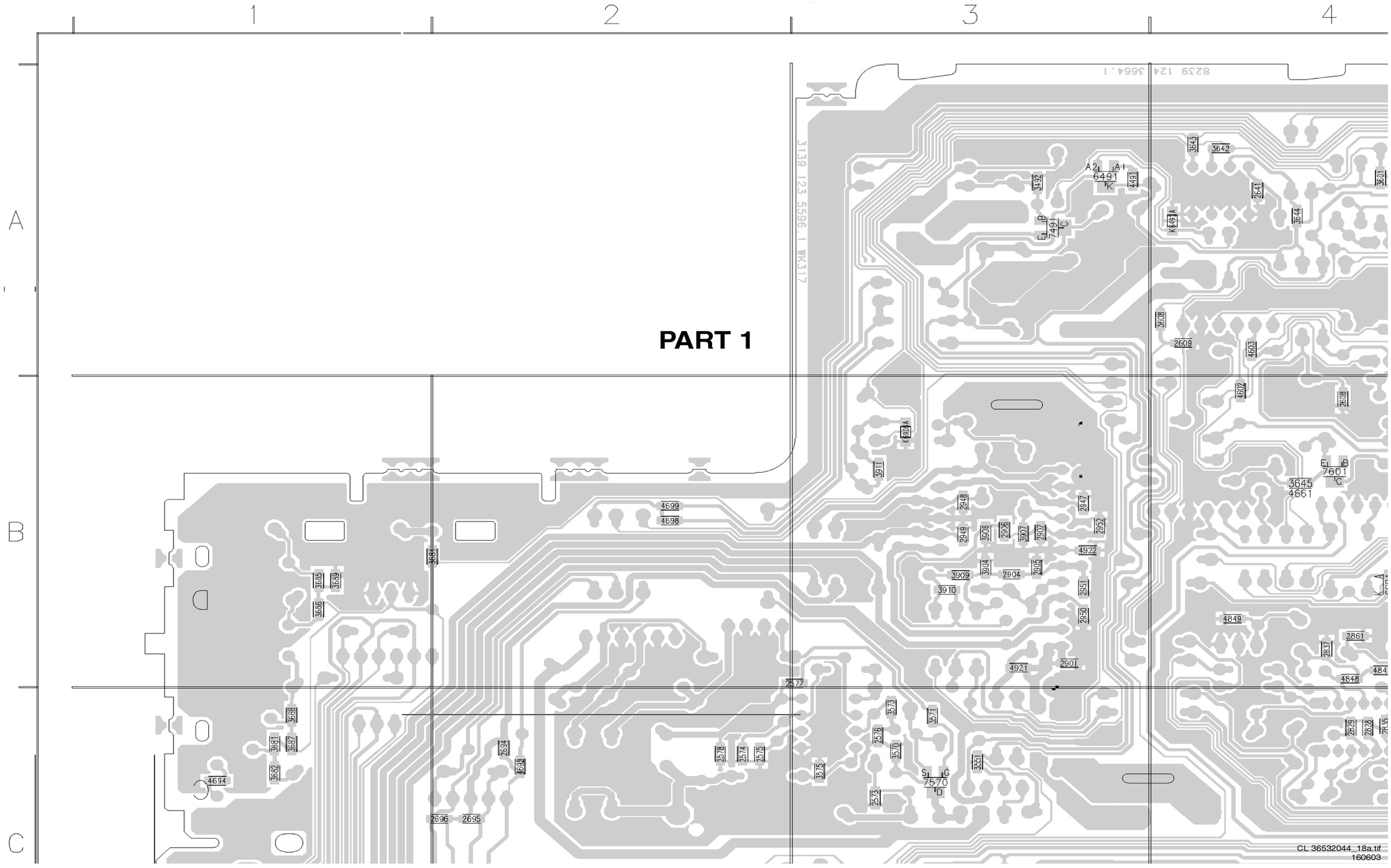

Layout Mono Carrier (Part 2 Bottom Side)

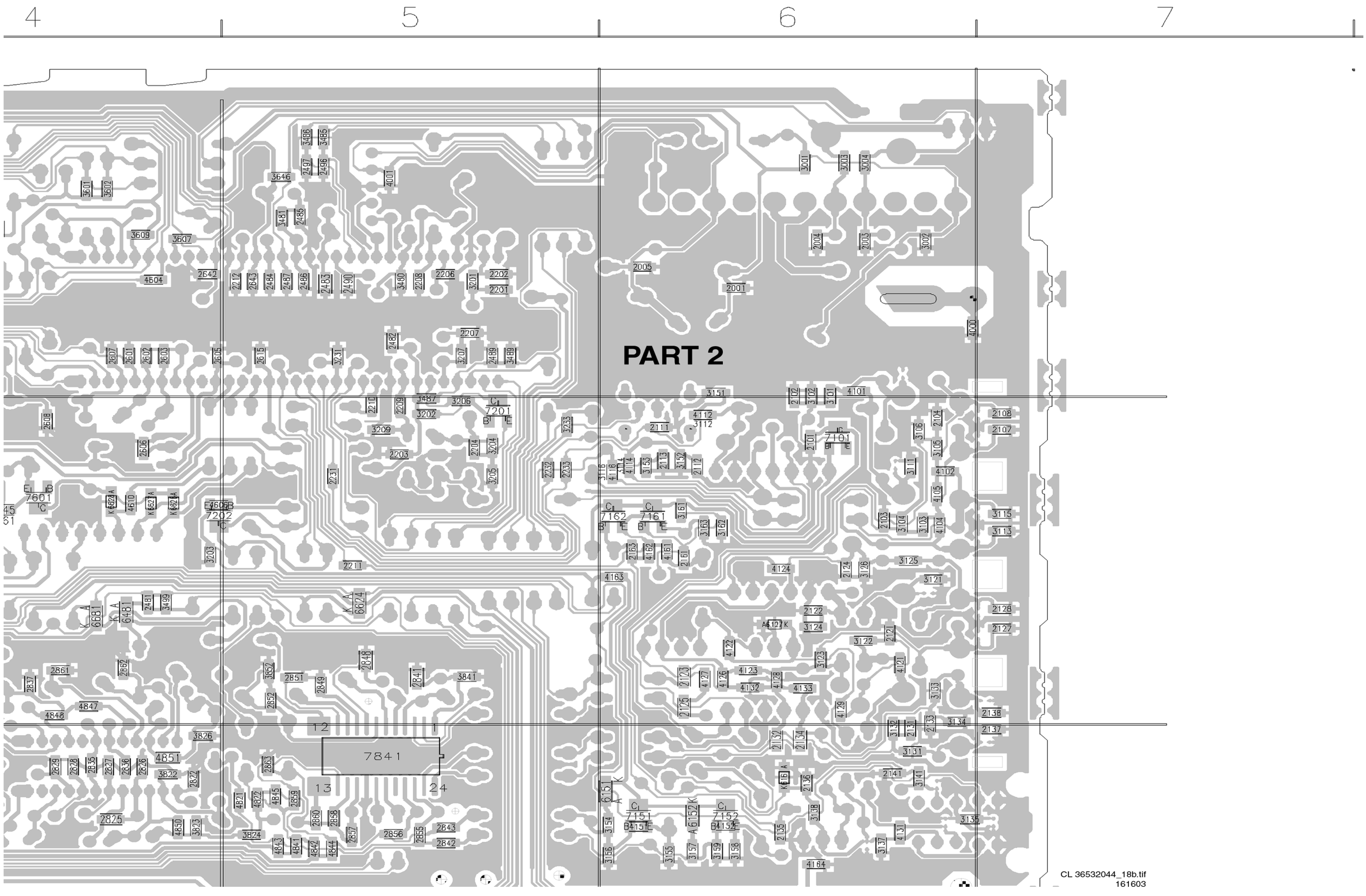

CL 36532044_18b.tif
161603

Layout Mono Carrier (Part 3 Bottom Side)

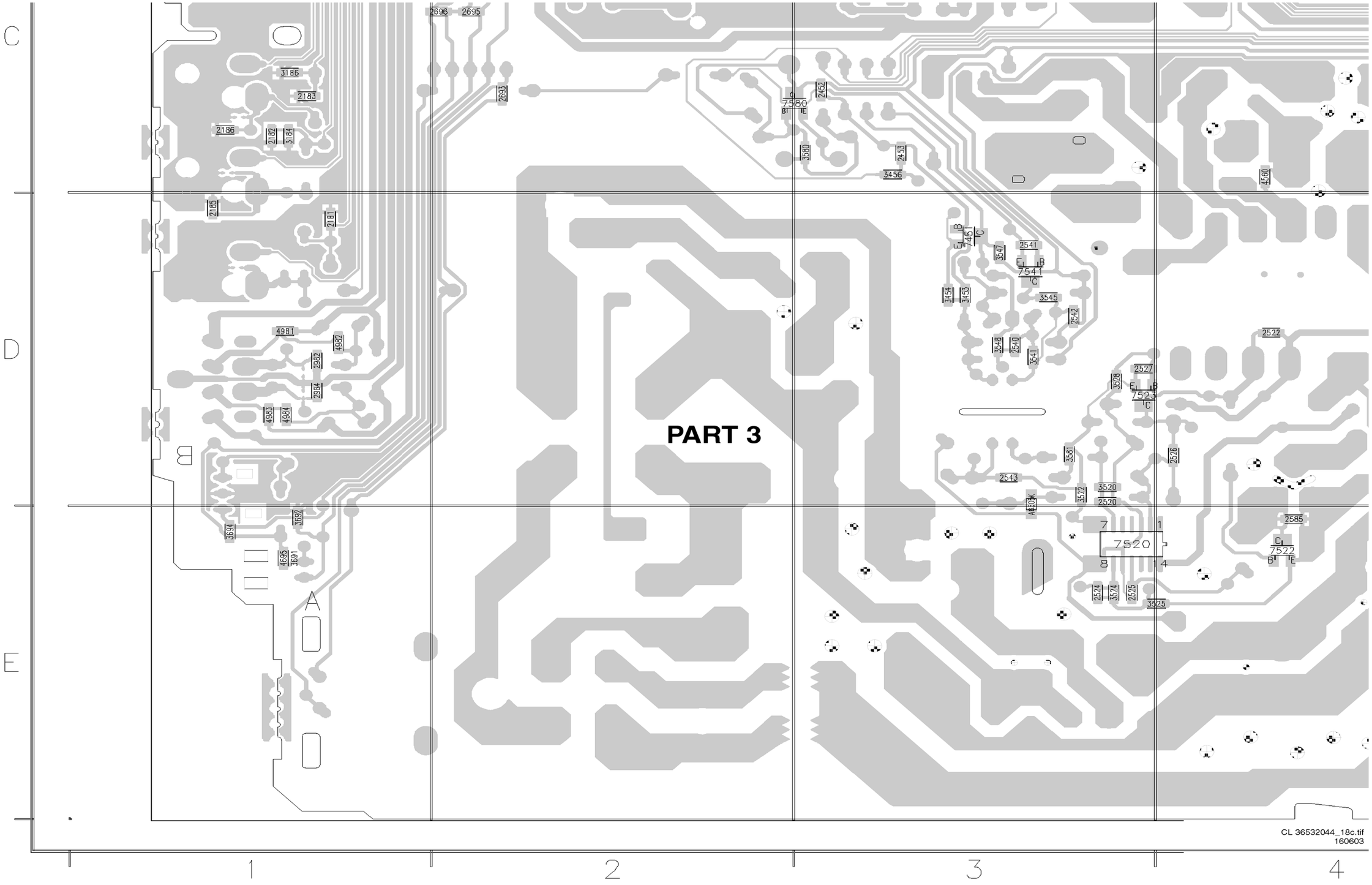

Layout Mono Carrier (Part 4 Bottom Side)

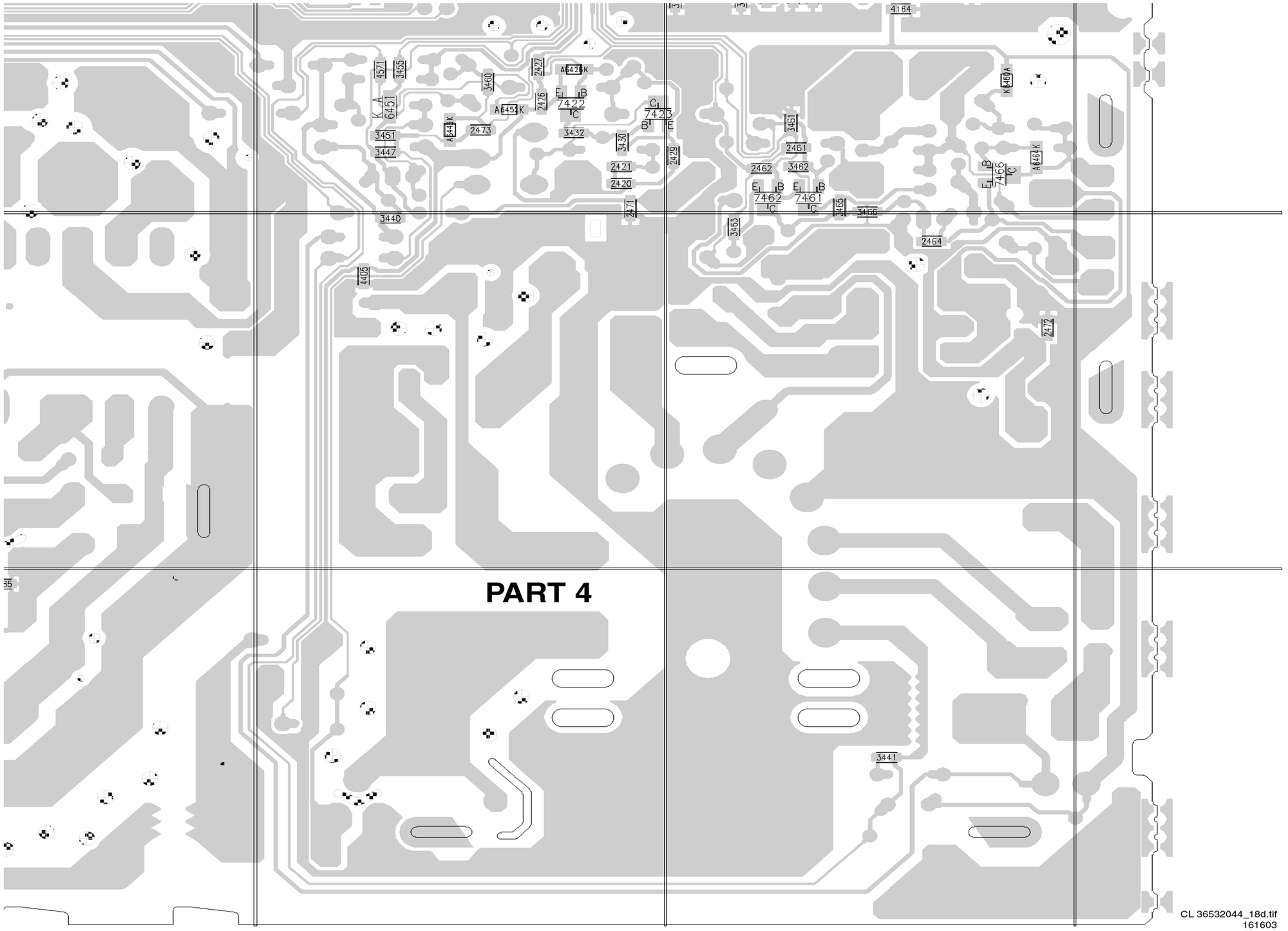

CRT Panel

B 1 CRT PANEL

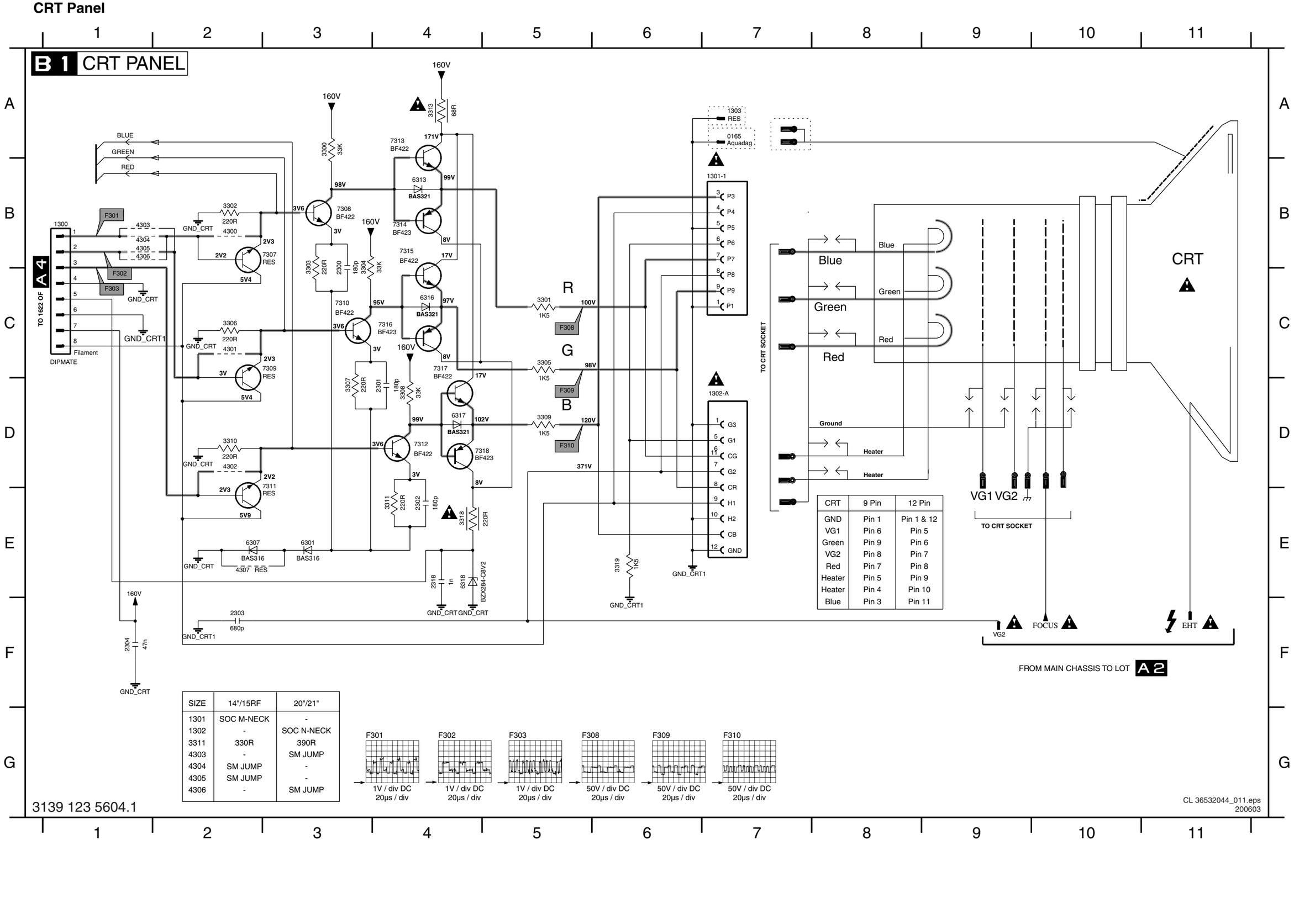

CRT	9 Pin	12 Pin
GND	Pin 1	Pin 1 & 12
VG1	Pin 6	Pin 5
Green	Pin 9	Pin 6
VG2	Pin 8	Pin 7
Red	Pin 7	Pin 8
Heater	Pin 5	Pin 9
Heater	Pin 4	Pin 10
Blue	Pin 3	Pin 11

SIZE	14"/15RF	20"/21"
1301	SOC M-NECK	-
1302	-	SOC N-NECK
3311	330R	390R
4303	-	SM JUMP
4304	SM JUMP	-
4305	SM JUMP	-
4306	-	SM JUMP

3139 123 5604.1

CL 36532044_011.eps
200603

VG2 F9
0165 A7
1300 B1
1301-1 B
1302-A B
1303 A7
2300 B3
2301 D4
2302 E4
2303 F2
2304 F1
2318 E4
3300 A3
3301 C5
3302 B2
3303 B3
3304 B3
3305 C5
3306 C2
3307 D3
3308 D4
3309 D5
3310 D2
3311 E4
3313 A4
3318 E4
3319 E6
4300 B2
4301 C2
4302 D2
4303 B1
4304 B1
4305 B1
4306 B1
4307 E2
6301 E3
6307 E2
6313 B4
6316 C4
6317 D4
6318 E4
7307 B2
7308 B3
7309 C2
7310 C3
7311 D2
7312 D4
7313 A4
7314 B4
7315 B4
7316 C4
7317 C4
7318 D4

Layout CRT Panel (Top Side)

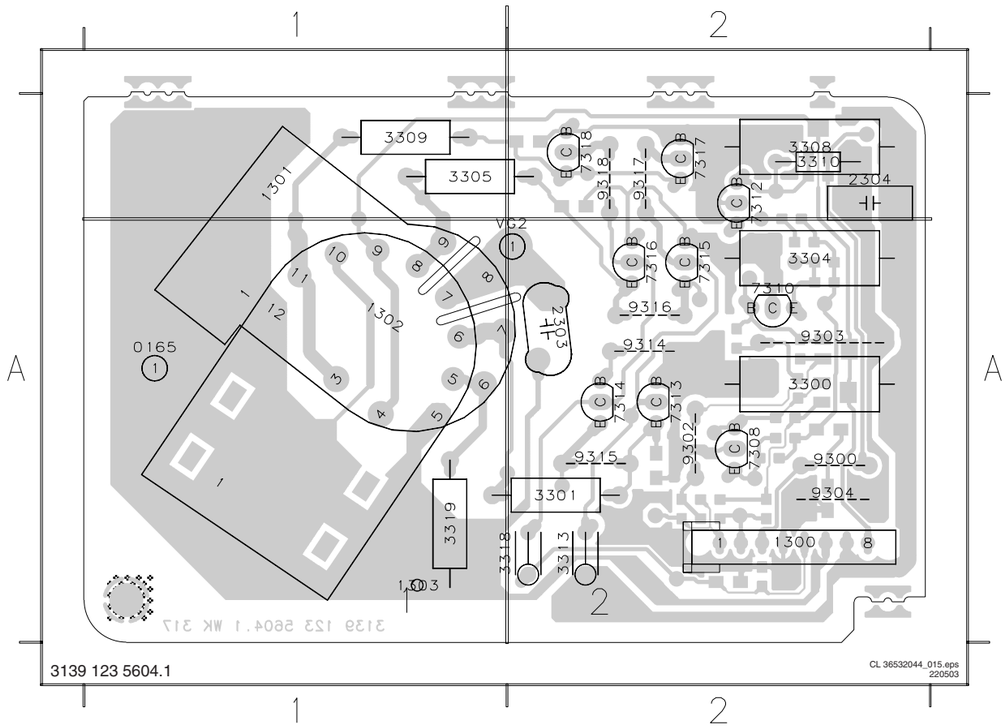

VG2 A2
0165 A1
1300 A2
1301 A1
1302 A1
1303 A1
2303 A2
2304 A2
3300 A2
3301 A2
3304 A2
3305 A1
3308 A2
3309 A1
3310 A2
3313 A2
3318 A1
3319 A1
7308 A2
7310 A2
7312 A2
7313 A2
7314 A2
7315 A2
7316 A2
7317 A2
7318 A2
9300 A2
9302 A2
9303 A2
9304 A2
9314 A2
9315 A2
9316 A2
9317 A2
9318 A2

Layout CRT Panel (Bottom Side)

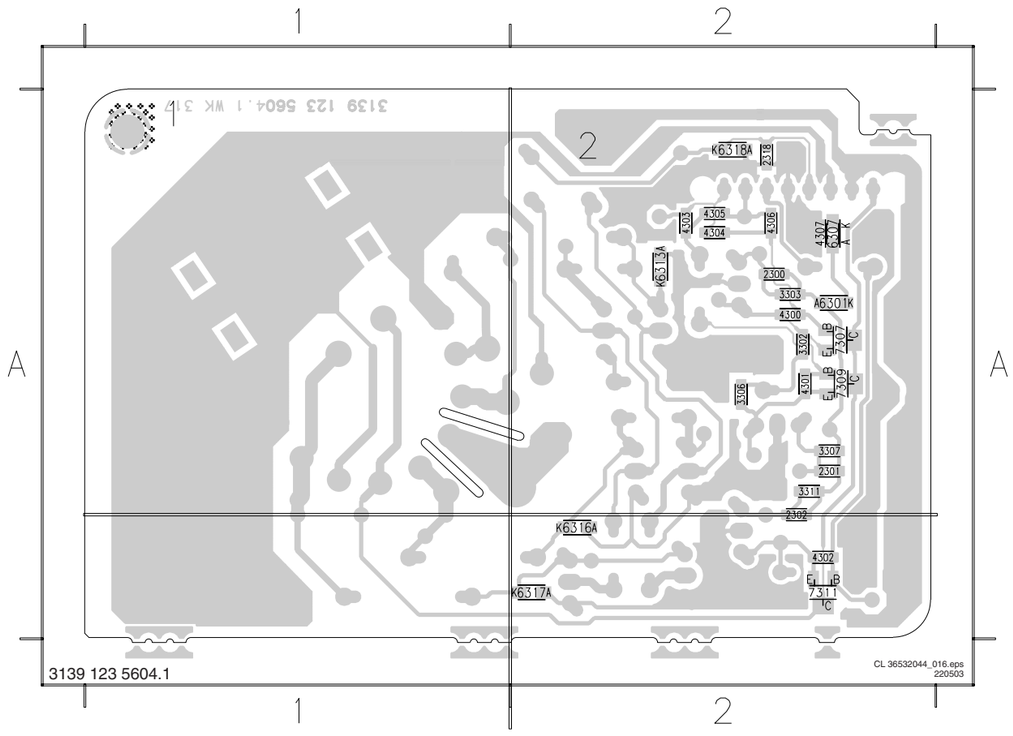

2300 A2
2301 A2
2302 A2
2318 A2
3302 A2
3303 A2
3306 A2
3307 A2
3311 A2
4300 A2
4301 A2
4302 A2
4303 A2
4304 A2
4305 A2
4306 A2
4307 A2
6301 A2
6307 A2
6313 A2
6316 A2
6317 A2
6318 A2
7307 A2
7309 A2
7311 A2

Personal Notes:

E_06532_012.eps
131004

Top Control Panel

1010 A1 1012 B3 1014 B2 3011 A2 3013 A3 3015 A3
1011 B3 1013 B2 3010 A1 3012 A2 3014 A3 3016 A3

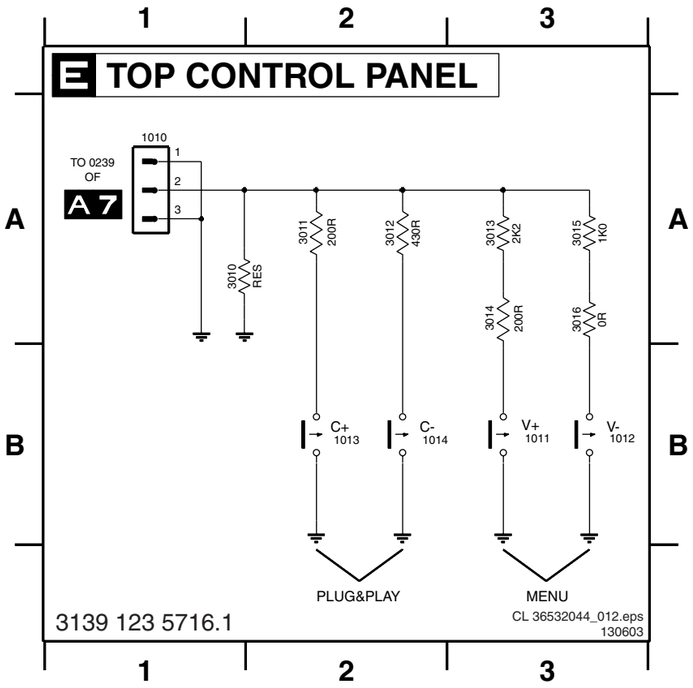

Layout Top Control Panel (Top Side)

1010 A2 1012 A1 1014 B1
1011 A2 1013 A1

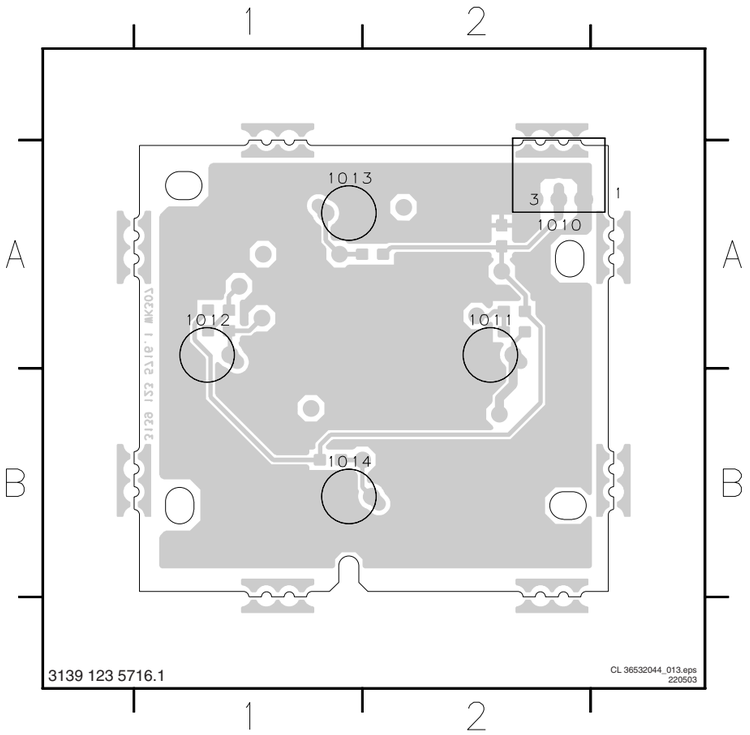

Layout Top Control Panel (Bottom Side)

3010 A1 3012 B2 3014 A1 3016 A2
3011 A1 3013 A1 3015 A2

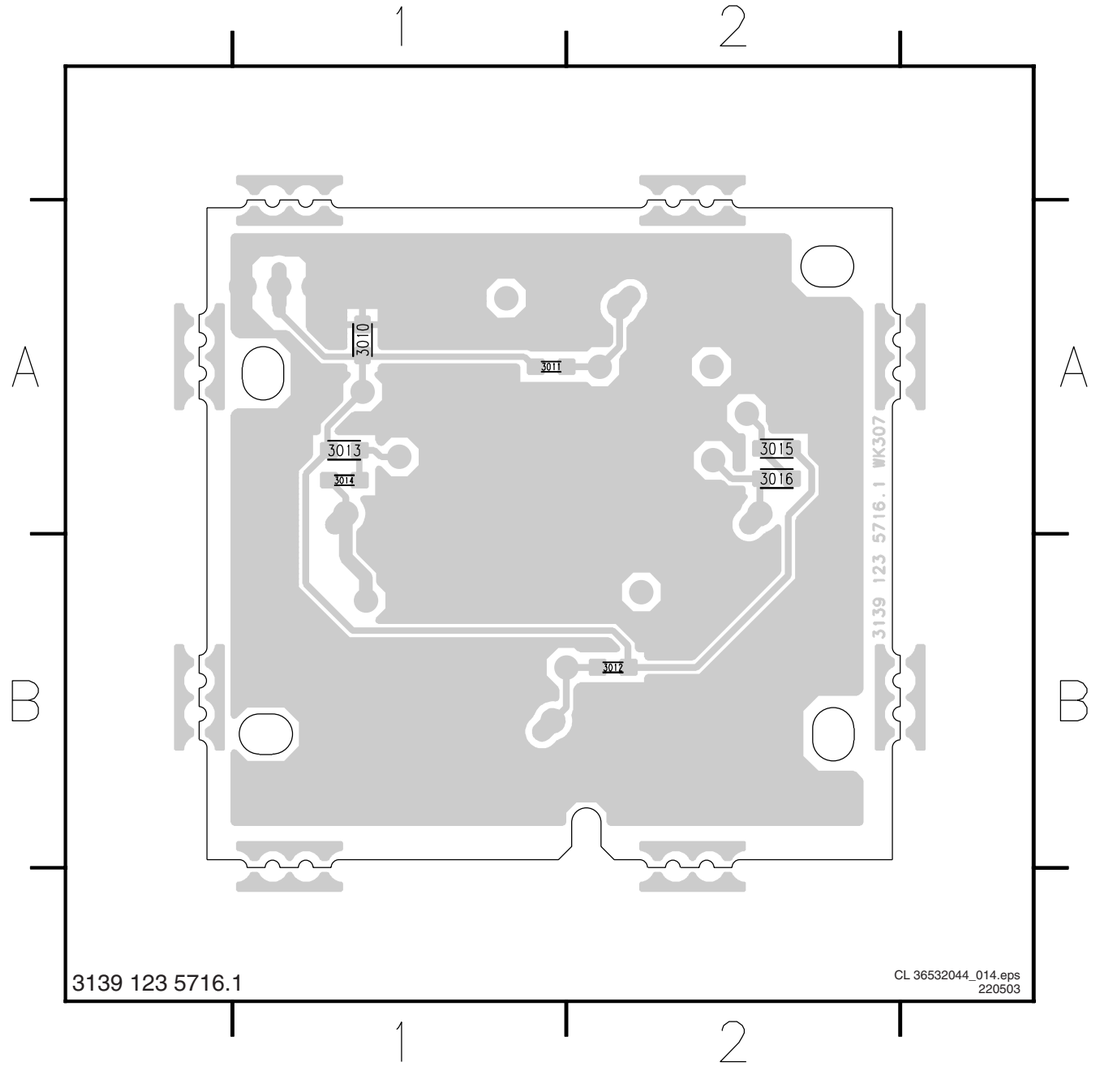

Personal Notes:

E_06532_013.eps
131004

8. Alignments

Index of this chapter:
8.1 General Alignment Conditions
8.2 Hardware Alignments
8.3 Software Alignments and Settings

Note: The Service Default Alignment Mode (SDAM) is described in the "Service Modes, Error Codes and Fault Finding" section. SDAM menu navigation is performed by using the MENU UP, MENU DOWN, MENU LEFT, and MENU RIGHT keys of the remote control transmitter.

8.1 General Alignment Conditions

Perform all electrical adjustments under the following conditions:

- AC voltage and frequency: according to country's standard.
- Connect the television set to the AC power via an isolation transformer.
- Allow the television set to warm up for approximately 20 minutes.
- Measure the voltages and waveforms in relation to chassis ground (with the exception of the voltages on the primary side of the power supply). Never use heatsinks as ground.
- Test probe: Ri > 10 M ohm; Ci < 2.5 pF.
- Use an isolated trimmer/screwdriver to perform the alignments.

8.2 Hardware Alignments

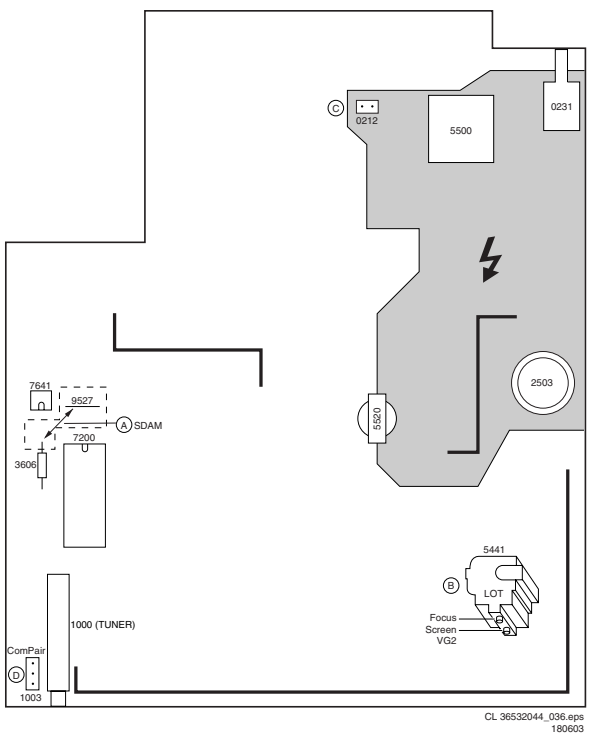

Figure 8-1 Top view family board

8.2.1 Vg2 Adjustment

1. Activate SDAM by pressing the following key sequence on the remote control transmitter: 0 6 2 5 9 6 directly followed by the MENU button (do not allow the display to time out between entries while keying the sequence).
2. Use the MENU UP/DOWN keys to highlight the WHITE TONE sub menu.
3. Press the MENU LEFT/RIGHT key to enter the WHITE TONE sub menu.
4. In the WHITE TONE sub menu, press the MENU UP/DOWN keys to select NORMAL RED, NORMAL GREEN, or NORMAL BLUE.
5. Use the MENU LEFT/RIGHT keys to set the values of NORMAL RED, NORMAL GREEN and NORMAL BLUE to '40'.
6. Press the MENU button twice to enter the normal user menu.
7. In the normal user menu, use the MENU UP/DOWN keys to highlight the PICTURE sub menu (if necessary).
8. Press the MENU LEFT/RIGHT keys to enter the PICTURE sub menu.
9. Use the MENU UP/DOWN keys to select CONTRAST. Be sure to record the current value of CONTRAST.
10. Use the MENU LEFT/RIGHT keys to set the value of CONTRAST to '0'.
11. Use the MENU UP/DOWN keys to select BRIGHTNESS. Be sure to record the current value of BRIGHTNESS.
12. Use the MENU LEFT/RIGHT keys to set the value of BRIGHTNESS to minimum (OSD just visible in a dark room).
13. Press the MENU button twice to return to the top level SDAM menu.
14. Press the OSD/STATUS button to hide the SDAM onscreen display ("S" indication remains visible). This, to avoid interferences during the waveform measurements
15. Connect the RF output of a video pattern generator to the antenna input, and input a 'black picture' test pattern to the television set.
16. Set the oscilloscope to 50 V/div and the time base to 0.2 milliseconds (external triggering on the positive vertical pulse with a 10:1 probe).
17. Ground the scope at the CRT panel and connect a 100:1 probe to one of the cathodes of the picture tube socket (pin 7= Red, pin 9= Green, and pin 3= Blue, see also schematic diagram B1). Measure the level of the black current measuring pulses. These are the second line (Red), third line (Green), and fourth line (Blue) directly after the frame blanking (see figure "V_cut-off"). **Remark:** This chassis is using a TDA93XX UOC series. These use two different measuring pulses at each of the R, G, and B outputs. The above-mentioned level applies to the pulse with the lowest level of each gun.
18. Select the cathode with the highest V_dc value for the alignment. Adjust the V_cut-off of this gun with the SCREEN potentiometer (see figure "Top view family board") on the LOT to the correct value (see table "Vg2 alignment values").
19. Press the OSD/STATUS button to display the SDAM onscreen display.
20. Press the MENU button to enter the normal user menu.
21. In the normal user menu, use the MENU UP/DOWN keys to highlight the PICTURE sub menu (if necessary).
22. Press the MENU LEFT/RIGHT keys to enter the PICTURE sub menu.
23. Use the MENU UP/DOWN keys to select CONTRAST.
24. Use the MENU LEFT/RIGHT keys to reset the value of CONTRAST to the original value.
25. Use the MENU UP/DOWN keys to select BRIGHTNESS.
26. Use the MENU LEFT/RIGHT keys to reset the value of BRIGHTNESS to the original value.
27. Press the MENU button twice to return to the top level SDAM menu.
28. Use the POWER button on the remote control transmitter or the POWER button on the television set to turn off the television set. This will save the changes made in SDAM.

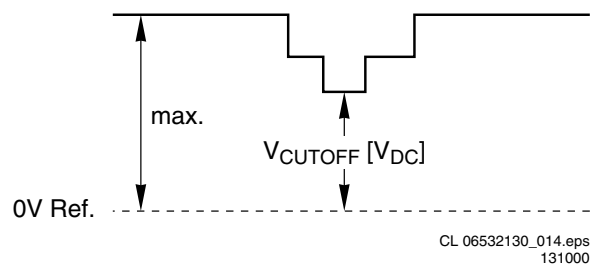

Figure 8-2 V_cutoff

Table 8-1 Vg2 alignment values

Screen Size / Brand	Cut-Off Point (V)
14" / LPD	+ 135 V
15"RF / Chunghwa	+ 135 V
20" / LPD	+ 140 V
21" / LPD	+ 140 V

8.2.2 Focusing

1. Connect the RF output of a video pattern generator to the antenna input.
2. Input a circle or crosshatch test pattern to the television set.
3. Press the SMART PICTURE button on the remote control transmitter repeatedly to choose NATURAL (or MOVIES) picture mode.
4. Adjust the FOCUS potentiometer (see figure "Top view family board") until the vertical lines near the left and right sides of the screen, and near the horizontal center of the screen, are at minimum width without visible haze.

8.3 Software Alignments and Settings

The following options are performed in the Service Default Alignment Mode (SDAM). SDAM is described in the "Service Modes, Error Codes and Fault Finding" section.
The following alignments are explained:
1. OPTIONS
2. TUNER
3. WHITE TONE
4. GEOMETRY
5. AUDIO

8.3.1 OPTIONS

Options are used to control the presence or absence of certain features and hardware.

Note: Each option byte controls several features of the television set; therefore, before changing option byte information, it is important to record the current option byte values. This ensures that the television features can be restored to the original settings, if necessary.

How to Change an Option Byte
An Option Byte represents a number of different options. Changing these bytes directly makes it possible to set all options very fast. All options are controlled via seven option bytes. Select the option byte (OP 1.. OP 7) with the MENU UP/DOWN keys, and enter the new value.

1. Activate SDAM by pressing the following key sequence on the remote control transmitter: 0 6 2 5 9 6 directly followed by the MENU button (do not allow the display to time out between entries while keying the sequence).
2. Use the MENU UP/DOWN keys to highlight the OPTIONS sub menu.
3. Press the MENU LEFT or MENU RIGHT key to enter the OPTIONS sub menu.
4. In the OPTIONS sub menu, press the MENU UP/DOWN keys to select 'OP 1' through 'OP 7'.
5. Use the number keys on the remote control transmitter to enter a new value for the selected option byte. The value must be entered as a three-digit value (for example, '4' would be entered as '0 0 4').
6. The selected value must be between '0' and '255'.
7. When all desired changes to the option bytes are made, press the MENU button to return to the top level SDAM menu. This will save changes to the option byte settings.
8. To ensure the option byte changes take effect:
   – Turn the television set 'off' by using the 'POWER' button on the remote control transmitter or the local keyboard.
   – Disconnect the television set from AC power for at least ten seconds.
   – Reconnect the television set to AC power.
   – Turn the television set 'on' by using the 'POWER' button on the remote control transmitter or the local keyboard.

Leaving the OPTION submenu saves the changes in the Option Byte settings. Some changes will only take effect after the set has been switched OFF and ON with the mains switch (cold start).

How to Calculate the Value of an Option Byte
Calculate an Option Byte value (OP 1 .. OP 7) in the following way:
1. Check the status of the single option bits (OB): are they enabled (1) or disabled (0).
2. When an option bit is enabled (1), it represents a certain value (see first column "value between brackets" in table below). When an option bit is disabled, its value is 0.
3. The total value of an Option Byte is formed by the sum of its eight option bits. See second table below for the correct Option Bytes per type number.

Bit (value)	OP1	OP2	OP3	OP4	OP5	OP6	OP7
0 (1)	OB10	OB20	OB30	OB40	OB50	OB60	OB70
1 (2)	OB11	OB21	OB31	OB41	OB51	OB61	OB71
2 (4)	OB12	OB22	OB32	OB42	OB52	OB62	OB72
3 (8)	OB13	OB23	OB33	OB43	OB53	OB63	OB73
4 (16)	OB14	OB24	OB34	OB44	OB54	OB64	OB74
5 (32)	OB15	OB25	OB35	OB45	OB55	OB65	OB75
6 (64)	OB16	OB26	OB36	OB46	OB56	OB66	OB76
7 (128)	OB17	OB27	OB37	OB47	OB57	OB67	OB77
Total:	**Sum**	**Sum**	**Sum**	**Sum**	**Sum**	**Sum**	**Sum**

CL 36532044_037.eps
160603

Figure 8-3 Option Byte calculation

Table 8-2 Options settings

Models (L03-LATAM)	OB1	OB2	OB3	OB4	OB5	OB6	OB7
14PT3131/44R NTSC MONO	1	71	65	0	194	64	80
14PT3131/55R NTSC MONO	1	71	65	0	194	64	80
14PT3131/78R Trinorma MONO	0	71	65	0	194	64	82
14PT3132/85R NTSC MONO	1	71	65	0	194	64	80
14PT4131/44R NTSC BTSC with SAP	1	199	65	161	192	65	80
14PT4131/55R NTSC BTSC with SAP	1	199	65	161	192	65	80
14PT4131/77R Trinorma BTSC with SAP	0	199	65	161	192	65	82
14PT4131/78R Trinorma BTSC with SAP	0	199	65	161	192	65	82
15PT5231/77R Trinorma BTSC with SAP	0	199	65	161	192	65	82
15PT5231/78R Trinorma BTSC with SAP	0	199	65	161	192	65	82
15PT5231/85R NTSC BTSC with SAP	1	199	65	161	192	65	80
20PT3331/44R NTSC MONO	1	71	65	0	194	64	80
20PT3331/55R NTSC MONO	1	71	65	0	194	64	80
20PT3331/77R Trinorma MONO	0	71	65	0	194	64	82
20PT3331/78R Trinorma MONO	0	71	65	0	194	64	82
20PT3331/85R NTSC MONO	1	71	65	0	194	64	80
20PT4205/44R xxxxx	17	199	65	161	204	201	00
20PT4330/85R NTSC Bisonic	1	71	65	0	194	64	80
20PT4331/44R NTSC BTSC with SAP	1	199	65	161	200	65	80
20PT4331/55R NTSC BTSC with SAP	1	199	65	161	200	65	80
20PT4331/77R Trinorma BTSC with SAP	0	199	65	161	200	65	82
20PT4331/78R Trinorma BTSC with SAP	0	199	65	161	200	65	82
20PT4331/85R NTSC BTSC with SAP	1	199	65	161	200	65	80
21PT4431/44R NTSC BTSC with SAP	1	199	65	161	200	65	80
21PT4431/77R Trinorma BTSC with SAP	0	199	65	161	200	65	82
21PT6333/44R NTSC BTSC with SAP	1	199	65	161	192	65	80
21PT6333/85R NTSC BTSC with SAP	1	199	65	161	192	65	80
21PT6341/44R NTSC BTSC with SAP	65	215	65	162	204	201	00
21PT6441/44R NTSC BTSC with SAP	65	215	65	162	204	201	00
21PT6533/44R NTSC BTSC with SAP	1	199	65	161	200	65	80
21PT6533/85R NTSC BTSC with SAP	1	199	65	161	200	65	80

Option Bit Assignment

Following are the option bit assignments for all L03 software clusters.

- **Option Byte 1 (OP 1)**
  - OB10: CHINA or NTSC_ONLY
  - OB11: VIRGIN_MODE
  - OB12: UK_PNP
  - OB13: ACI
  - OB14: ATS (EU), or FINE_TUNING (NAFTA), or LANGUAGE_MALAY (AP)
  - OB15: LNA
  - OB16: FM_RADIO
  - OB17: PHILIPS_TUNER
- **Option Byte 2 (OP 2)**
  - OB20: HUE
  - OB21: COLOR_TEMP
  - OB22: CONTRAST_PLUS
  - OB23: TILT
  - OB24: NOISE_REDUCTION
  - OB25: CHANNEL_NAMING
  - OB26: SMART_PICTURE
  - OB27: SMART_SOUND
- **Option Byte 3 (OP 3)**
  - OB30: AVL
  - OB31: WSSB (EU) or HOME_CINEMA (AP)
  - OB32: WIDE_SCREEN
  - OB33: Virtual Dolby
  - OB34: MSP34X5_VOL_CTRL
  - OB35: COMPRESS_16_9
  - OB36: EXPAND_4_3
  - OB37: EW_FUNCTION
- **Option Byte 4 (OP 4)**
  - OB40: STEREO_NON_DBX
  - OB41: STEREO_DBX
  - OB42: STEREO_PB
  - OB43: STEREO_NICAM_2CS
  - OB44: DELTA_VOLUME
  - OB45: ULTRA_BASS
  - OB46: VOLUME_LIMITER
  - OB47: INCR_SUR
- **Option Byte 5 (OP 5)**
  - OB50: PIP or CLOCK
  - OB51: HOTEL_MODE
  - OB52: SVHS
  - OB53: CVI
  - OB54: AV3
  - OB55: AV2
  - OB56: AV1
  - OB57: NTSC_PLAYBACK
- **Option Byte 6 (OP 6)**
  - OB60: BASS_TREBLE,
  - OB61: SMART_TEXT
  - OB62: SMART_LOCK
  - OB63: VCHIP (LATAM & NAFTA) or TXT_1PG (EU)
  - OB64: WAKEUP_CLOCK
  - OB65: SMART_CLOCK
  - OB66: SMART_SURF
  - OB67: PERSONAL_ZAPPING
- **Option Byte 7 (OP 7)**
  - OB70: SOUND_SYSTEM_AP_3 / MULTI_STANDARD_EUR / SYSTEM_LT_2
  - OB71: SOUND_SYSTEM_AP_2 / WEST_EU / SYSTEM_LT_1
  - OB72: SOUND_SYSTEM_AP_1
  - OB73: COLOR_SYSTEM_AP

- OB74: SIGNAL_STRENGTH / DVD_WAKEUP_TIMER (DVD COMBI)
- OB75: LNA_PP (AP), VOICE_CONTROL
- OB76: ACTIVE_CONTROL
- OB77: TIME_WIN1

Option Bit Definition

OB10: CHINA or NTSC_ONLY
0: Tuning is not for China set or NTSC only set, or this option bit is not applicable,
1: Tuning is for China set or NTSC only set,
Default setting for LATAM: 0 for /77R and /78R sets, 1 for the rest.

OB11: VIRGIN_MODE
0: Virgin mode is disabled or not applicable,
1: Virgin mode is enabled. Plug and Play menu item will be displayed to perform installation at the initial startup of the TV when VIRGIN_MODE is set to 1. After installation is finished, this option bit will be automatically set to 0,
Default setting for LATAM: 0.

OB12: UK_PNP
0: UK's default Plug and Play setting is not available or not applicable,
1: UK's default Plug and Play setting is available. When UK_PNP and VIRGIN_MODE are set to 1 at the initial setup, LANGUAGE = ENGLISH, COUNTRY = GREAT BRITAIN and after exiting from menu, VIRGIN_MODE will be set automatically to 0 while UK_PNP remains 1,
Default setting for LATAM: 0.

OB13: ACI
0: ACI feature is disabled or not applicable,
1: ACI feature is enabled,
Default setting for LATAM: 0.

OB14: ATS (EU), or FINE_TUNING (NAFTA), or LANGUAGE_MALAY (AP)
0: Feature is disabled or not applicable,
1: Feature is enabled,
Default setting for LATAM: 0.

OB15: LNA
0: Auto Picture Booster is not available or not applicable,
1: Auto Picture Booster is available,
Default setting for LATAM: 0.

OB16: FM_RADIO
0: FM radio feature is disabled or not applicable,
1: FM radio feature is enabled,
Default setting for LATAM: 0.

OB17: PHILIPS_TUNER
0: ALPS / MASCO compatible tuner is in use,
1: Philips compatible tuner is in use,
Default setting for LATAM: 0.

OB20: HUE
0: Hue/Tint Level is disabled or not applicable,
1: Hue/Tint Level is enabled,
Default setting for LATAM: 1.

OB21: COLOR_TEMP
0: Color Temperature is disabled or not applicable,
1: Color Temperature is enabled,
Default setting for LATAM: 1.

OB22: CONTRAST_PLUS
0: Contrast+ is disabled or not applicable,
1: Contrast+ is enabled,
Default setting for LATAM: 1.

OB23: TILT
0: Rotate Picture is disabled or not applicable,
1: Rotate Picture is enabled,
Default setting for LATAM: 0.

OB24: NOISE_REDUCTION
0: Noise Reduction (NR) is disabled or not applicable,
1: Noise Reduction (NR) is enabled,
Default setting for LATAM: 0.

OB25: CHANNEL_NAMING
0: Name FM Channel is disabled or not applicable,
1: Name FM Channel is enabled,
Default setting for LATAM: 0.

Note: Name FM channel can be enabled only when FM_RADIO= 1.

OB26: SMART_PICTURE
0: Smart Picture is disabled or not applicable,
1: Smart Picture is enabled,
Default setting for LATAM: 1

OB27: SMART_SOUND
0: Smart Sound is disabled or not applicable,
1: Smart Sound is enabled,
Default setting for LATAM: 0 for mono sets, 1 for stereo sets.

AP30: AVL
0: AVL is disabled or not applicable,
1: AVL is enabled,
Default setting for LATAM: 1.

OB31: WSSB or HOME_CINEMA
0: WSSB is disabled or not applicable,
1: WSSB is enabled,
Default setting for LATAM: 0.
Note: This option bit can be set to 1 only when WIDE_SCREEN= 1.

OB32: WIDE_SCREEN
0: Software is used for 4:3 set or not applicable,
1: Software is used for 16:9 set,
Default setting for LATAM: 0.

OB33: Virtual Dolby
Default setting for LATAM: 1.

OB34: MSP34X5_VOL_CTRL
Default setting for LATAM: 0.
Note: For 2 x 10 W sets only.

OB35: COMPRESS_16_9
0: COMPRESS 16:9 selection is not applicable. Item should not be in the FORMAT menu list,
1: COMPRESS 16:9 selection is applicable. Item should not be in the FORMAT menu list,
Default setting for LATAM: 0.

OB36: EXPAND_4_3
0: Expand 4:3 selection is not applicable. Item should not be in the FORMAT menu list,
1: Expand 4:3 selection is applicable. Item should be in the FORMAT menu list,
Default setting for LATAM: 1.

OB37: EW_FUNCTION
0: EW function is disabled. In this case, only Expand 4:3 is allowed, Compress 16:9 is not applicable.
1: EW function is enabled. In this case, both Expand 4:3 and Compress 16:9 are applicable.
Default setting for LATAM: 0.

OB40: STEREO_NON_DBX
0: For AP_NTSC, chip TDA 9853 is not present,
1: For AP_NTSC, chip TDA 9853 is present,
Default setting for LATAM: 0 for mono sets, 1 for stereo sets.

OB41: STEREO_DBX
0: For AP_NTSC, chip MSP 3445 is not present,
1: For AP_NTSC, chip MSP 3445 is present,
Default setting for LATAM: 0.

OB42: STEREO_PB or KOREAN_2CS
0: For AP_PAL, chip MSP3465 is not present,
1: For AP_PAL, chip MSP3465 is present,
Default setting for LATAM: 0.

OB43: STEREO_NICAM_2CS
0: For EU and AP_PAL, chip MSP 3415 is not present,
1: For EU and AP_PAL, chip MSP 3415 is present,
Default setting for LATAM: 0.

OB44: DELTA_VOLUME
0: Delta Volume Level is disabled or not applicable,
1: Delta Volume Level is enabled,
Default setting for LATAM: 0.

OB45: ULTRA_BASS
0: Ultra Bass is disabled or not applicable,
1: Ultra Bass is enabled,
Default setting for LATAM: 0 for mono sets, 1 for stereo sets.

OB46: VOLUME_LIMITER
0: Volume Limiter Level is disabled or not applicable,
1: Volume Limiter Level is enabled,
Default setting for LATAM: 0.

OB47: INCR_SUR
0: Incredible Surround feature is disabled,
1: Incredible Surround feature is enabled,
Default setting for LATAM: 0 for mono sets, 1 for stereo sets.
OB50: PIP or CLOCK
0: Feature is disabled or not applicable,
1: Feature is enabled,
Default setting for LATAM: 0.
OB51: HOTEL_MODE
0: Hotel mode is disabled or not applicable,
1: Hotel mode is enabled,
Default setting for LATAM: 0 for stereo sets, 1 for mono sets.
OB52: SVHS
0: SVHS source is not available,
1: SVHS source is available,
Default setting for LATAM: 0.
Note: This option bit is not applicable for EU.
OB53: CVI
0: CVI source is not available,
1: CVI source is available,
OB54: AV3
0: Side/Front AV3 source is not present,
1: Side/Front AV3 source is present,
Default setting for LATAM: 0.
OB55: AV2
0: AV2 source is not present,
1: AV2 source is present,
Default setting for LATAM: 0.
Note: For EU, when AV2=1, both EXT2 and SVHS2 should be included in the OSD loop.
OB56: AV1
0: AV1 source is not present,
1: AV1 source is present,
Default setting for LATAM: 1.
OB57: NTSC_PLAYBACK
0: NTSC playback feature is not available,
1: NTSC playback feature is available,
Default setting for LATAM: 1.
OB60: BASS_TREBLE
0: Feature is not available,
1: Feature is available,
Default setting for LATAM: 0 for mono sets, 1 for stereo sets.
OB61: SMART_TEXT
0: Smart Text Mode and Favorite Page are disabled or not applicable,
1: Smart Text Mode and Favorite Page are enabled,
Default setting for LATAM: 0.
OB62: SMART_LOCK
0: Child Lock and Lock Channel are disabled or not applicable for EU,
1: Child Lock and Lock Channel are enabled for EU,
Default setting for LATAM: 1.
OB63: VCHIP (LATAM & NAFTA) / TXT_1PG (EU)
0: Feature is disabled,
1: Feature is enabled,
Default setting for LATAM: 0.
OB64: WAKEUP_CLOCK
0: Wake up clock feature is disabled or not applicable,
1: Wake up clock feature is enabled,
Default setting for LATAM: 0.
OB65: SMART_CLOCK
0: Smart Clock Using Teletext and Smart Clock Using PBS is disabled or not applicable,
1: Smart Clock Using Teletext and Smart Clock Using PBS is enabled. For NAFTA, menu item AUTOCHRON is present in the INSTALL submenu,
Default setting for LATAM: 0.
OB66: SMART_SURF
0: Smart Surf feature is disabled or not applicable,
1: Smart Surf feature is enabled,
Default setting for LATAM: 1.
OB67: PERSONAL_ZAPPING
0: Personal Zapping feature is disabled or not applicable,
1: Personal Zapping feature is enabled,
Default setting for LATAM: 0.
OB70: MULTI_STANDARD_EUR
0: Not for Europe multi standard set, or this option bit is not applicable,
1: For Europe multi standard set.
Note: This option bit is used to control the SYSTEM selection in Manual Store:
If MULTI_STANDARD_EUR = 1 then SYSTEM = Europe, West Europe, East Europe, UK, France
otherwise SYSTEM = "Europe, West Europe, UK for West Europe" (WEST_EU=1) or SYSTEM = "Europe, West Europe, East Europe for East Europe" (WEST_EU=0)
OB71: WEST_EU
0: For East Europe set, or this option bit is not applicable,
1: For West Europe set,
OB71 and 70: SYSTEM_LT_1, SYSTEM_LT_2
These two option bits are allocated for LATAM system selection.
00: NTSC-M
01: NTSC-M, PAL-M
10: NTSC-M, PAL-M, and PAL-N
11: NTSC-M, PAL-M, PAL-N, and PAL-BG
OB70, 71 and 72: SOUND_SYSTEM_AP_1, SOUND_SYSTEM_AP_2, SOUND_SYSTEM_AP_3
These three option bits are allocated for AP_PAL sound system selection.
000: BG
001: BG / DK
010: I / DK
011: BG / I / DK
100: BG / I / DK / M
OB73: COLOR_SYSTEM_AP
This option bit is allocated for AP-PAL color system selection.
0: Auto, PAL 4.43, NTSC 4.43, and NTSC 3.58
1: Auto, PAL 4.43, NTSC 4.43, NTSC 3.58, and SECAM
Default setting for LATAM: 0
OB74: SIGNAL_STRENGTH / DVD WAKEUP TIMER (DVD COMBI), 3D_COMBFILTER (NAFTA)
Default setting for LATAM: 1.
OB75: LNA_PP (for L01 AP cluster), VOICE_CONTROL
Default setting for LATAM: 0.
OB76: ACTIVE_CONTROL
Default setting for LATAM: 1.
OB77: TIME_WIN1
0: The time window is set to 1.2 s,
1: The time window is set to 2 s,
Default setting for LATAM: 0.
Note: The time-out for all digit entries depends on this setting.

8.3.2 TUNER

Note: Described alignments are only necessary when the NVM (part reference number 7641) is replaced.

IFPLL
This adjustment is auto-aligned. Therefore, no action is required (default= "30").

AGC (AGC take over point)
1. Connect the RF output of a video pattern generator to the antenna input.
2. Input a color bar test pattern to the television set.
3. Set the amplitude of the video pattern generator to 10 mV and set the frequency to 475.25 MHz (PAL/SECAM) or 61.25 MHz (NTSC).
4. Connect a DC multimeter to pin 1 of the tuner (item 1000 on the main chassis).
5. Activate SDAM by pressing the following key sequence on the remote control transmitter: 0 6 2 5 9 6 directly followed by the MENU button (do not allow the display to time out between entries while keying the sequence).
6. Use the MENU UP/DOWN keys to highlight the TUNER sub menu.
7. Press the MENU LEFT/RIGHT keys to enter the TUNER sub menu.

8. Use the MENU UP/DOWN keys to select AGC.
9. Use the MENU LEFT/RIGHT keys to adjust the AGC value (default value is "32") until the DC-voltage at pin 1 of the tuner lies is 3.3 V.
10. Press the MENU button to return to the top level SDAM menu.
11. To ensure the AGC change takes effect:
    – Turn the television set 'off' by using the 'POWER' button on the remote control transmitter or the local keyboard.
    – Disconnect the television set from AC power for at least ten seconds.
    – Reconnect the television set to AC power.
    – Turn the television set 'on' by using the 'POWER' button on the remote control transmitter or the local keyboard.

SL (Slicing Level)
This adjustment sets the sync slicing level for non-standard signals. You must turn it 'on' to have no picture instability in premium decoded cable channels.
- OFF: slicing level dependent on noise level.
- ON: fixed slicing level of 70 %.

To adjust SL:
1. Activate SDAM by pressing the following key sequence on the remote control transmitter: 0 6 2 5 9 6 directly followed by the MENU button (do not allow the display to time out between entries while keying the sequence).
2. Use the MENU UP/DOWN keys to highlight the TUNER sub menu.
3. Press the MENU LEFT/RIGHT keys to enter the TUNER sub menu.
4. Use the MENU UP/DOWN keys to select SL.
5. Use the MENU LEFT/RIGHT keys to toggle SL 'Off' and 'On'.
6. Press the MENU button to return to the top level SDAM menu.
7. To ensure the SL setting is saved:
    – Turn the television set 'off' by using the 'POWER' button on the remote control transmitter or the local keyboard.
    – Disconnect the television set from AC power for at least ten seconds.
    – Reconnect the television set to AC power.
    – Turn the television set 'on' by using the 'POWER' button on the remote control transmitter or the local keyboard.

CL (Cathode Drive Level)
Fixed value is "7".

8.3.3 WHITE TONE

The values of the 'black cut-off level' can be adjusted in the 'WHITE TONE' sub menu.
Normally, no alignment is needed for 'WHITE TONE', and the given default values are used.

Default settings for **NORMAL** (color temperature= 11500 K):
– NORMAL RED = 22
– NORMAL GREEN = 21
– NORMAL BLUE = 26

To adjust NORMAL RED, NORMAL GREEN, and NORMAL BLUE:
1. Connect the RF output of a video pattern generator (e.g. PM5418) to the antenna input.
2. Set the amplitude of the video pattern generator to at least 1 mV and set the frequency to 475.25 MHz (PAL/SECAM) or 61.25 MHz (NTSC).
3. Input a "100 IRE white" pattern to the television set.
4. Activate SDAM by pressing the following key sequence on the remote control transmitter: 0 6 2 5 9 6 directly followed by the MENU button (do not allow the display to time out between entries while keying the sequence).
5. Use the MENU UP/DOWN keys to highlight the WHITE TONE sub menu.
6. Press the MENU LEFT/RIGHT keys to enter the WHITE TONE sub menu.
7. Use the MENU UP/DOWN keys to select NORMAL RED, NORMAL GREEN, or NORMAL BLUE.
8. Set the Minolta CA100 color analyzer (or equivalent) in RGB mode, and set all color temperature settings to their default values.
9. Place the color sensor of the meter in the middle of the screen.
10. Set the meter in "T-dUV-Y" mode, and set CONTRAST to make the light output "Y" on the meter 90 nit ± 15%
11. Use the MENU LEFT/RIGHT keys to adjust the value of NORMAL GREEN and/or NORMAL BLUE.
12. When all desired changes to the WHITE TONE sub menu values are made, press the MENU button to return to the top level SDAM menu.
13. To ensure the WHITE TONE settings are saved:
    – Turn the television set 'off' by using the 'POWER' button on the remote control transmitter or the local keyboard.
    – Disconnect the television set from AC power for at least ten seconds.
    – Reconnect the television set to AC power.
    – Turn the television set 'on' by using the 'POWER' button on the remote control transmitter or the local keyboard.

8.3.4 GEOMETRY

Introduction
The geometry alignment menu contains several items for correct picture geometry alignment.

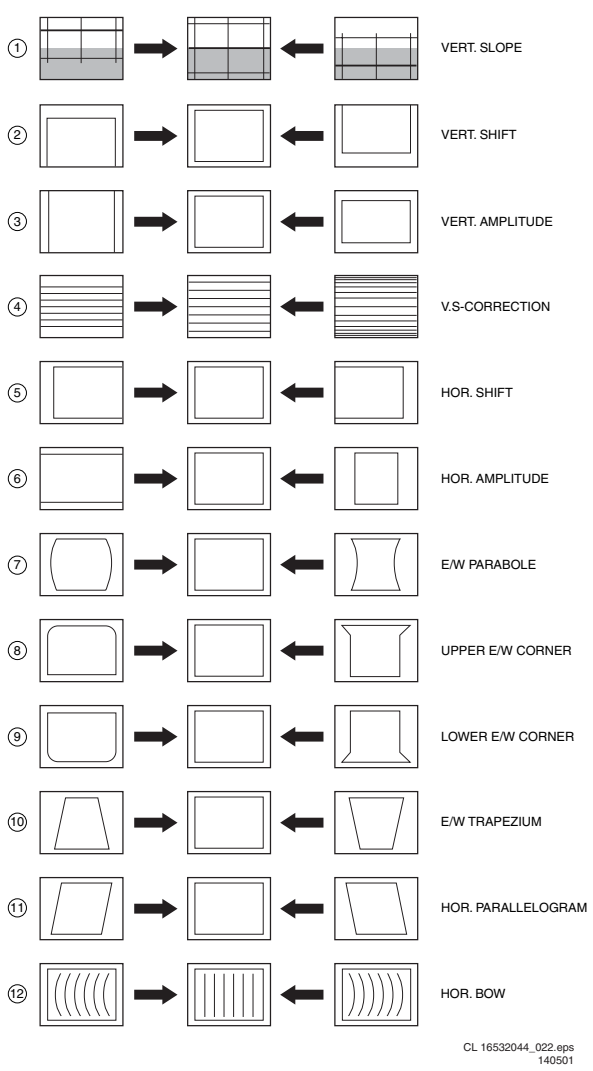

Figure 8-4 Geometry alignments

1. Connect the RF output of a video pattern generator to the antenna input.
2. Input a crosshatch test pattern to the television set.
3. Set the amplitude of the video pattern generator to at least 1 mV and set the frequency to 475.25 MHz (PAL/SECAM) or 61.25 MHz (NTSC).
4. Press the SMART PICTURE button on the remote control transmitter repeatedly to choose PERSONAL or MOVIES picture mode.
5. Activate SDAM by pressing the following key sequence on the remote control transmitter: 0 6 2 5 9 6 directly followed by the MENU button (do not allow the display to time out between entries while keying the sequence).
6. Use the MENU UP/DOWN keys to highlight the GEOMETRY sub menu.
7. Press the MENU LEFT/RIGHT keys to enter the GEOMETRY sub menu.
8. Use the MENU UP/DOWN keys to highlight either the HORIZONTAL sub menu or the VERTICAL sub menu.
9. Press the MENU LEFT/RIGHT keys to enter either the HORIZONTAL sub menu or the VERTICAL sub menu.
10. Use the MENU UP/DOWN keys to select items in the HORIZONTAL sub menu or the VERTICAL sub menu.
11. Use the MENU LEFT/RIGHT keys to adjust the values of items in the HORIZONTAL and VERTICAL sub menus.
12. When all desired changes to the HORIZONTAL and VERTICAL sub menu values are made, press the MENU button twice to return to the top level SDAM menu.
13. To ensure the GEOMETRY settings are saved:
    - Turn the television set 'off' by using the 'POWER' button on the remote control transmitter or the local keyboard.
    - Disconnect the television set from AC power for at least ten seconds.
    - Reconnect the television set to AC power.
    - Turn the television set 'on' by using the 'POWER' button on the remote control transmitter or the local keyboard.

The following alignments can be performed in the GEOMETRY sub menu:

Horizontal Alignments:
- **Horizontal Shift (HSH).** Select Horizontal Shift to canter the picture on the screen.
- **Picture Width (PW).** Aligns the width of the picture.

Vertical Alignments:
- **Vertical slope (VSL).** Aligns the picture so the proportions are the same at the top and bottom of the screen. This alignment must be performed first, before all other vertical alignments. Turning SBL 'on' will assist in performing this alignment.
- **Vertical Amplitude (VAM).** Aligns the height of the picture (other vertical alignments are NOT compensated).
- **Vertical S-Correction (VSC).** Aligns the vertical linearity, so that the vertical intervals of the grid-patterns are the same over the entire height of the screen.
- **Vertical Shift (VSH).** Aligns the vertical center of the picture to the vertical center of the CRT. After performing this alignment, it may be necessary to perform the VAM alignment again.
- **Service blanking (SBL).** Turns the blanking of the lower half of the screen 'on' or 'off' (to be used in combination with the vertical slope alignment).
- **Delta Horizontal Shift 60 Hz (H60).**
- **Delta Vertical Amplitude 60 Hz (V60).**

Methods of Adjustment

Vertical Amplitude and Position
1. Select SERVICE BLANKING (SBL) and set it to 1. The lower half of the picture will be blanked.
2. Press the MENU UP/DOWN buttons to select VERTICAL SLOPE (VSL).
3. Align VSL to start the blanking exactly at the horizontal white line at the canter of the test circle (align the bottom of the screen so that castellations just disappear).
4. Press the MENU UP/DOWN buttons to select SBL and set it back to 0. The full picture reappears.
5. Select VERTICAL AMPLITUDE (VAM) and align the picture height to approximately 13.0 - 13.1 blocks (align the top of the screen so that castellations just disappear).
6. Select VERTICAL SHIFT (VSH) and align for vertical centering of the picture on the screen.

Repeat the last two steps if necessary.

Horizontal Phase
1. Set PW to "0".
2. Select Horizontal Shift (HSH) to center the picture on the screen.

Horizontal and Vertical Shift Offset for NTSC (TRINOMA and PAL chassis)
1. Align the set for VSH and HSH (according to above mentioned procedures) with a PAL system signal.
2. Change the signal to NTSC system and adjust HORIZONTAL SHIFT OFFSET (H60) and VERTICAL SHIFT OFFSET (V60) to center the picture on the screen.
3. Repeat if necessary.

The table below lists the default GEOMETRY values for the different television sets.

Table 8-3 Default geometry values

Alignment	Description	Value
PW	Picture Width	31
HSH	Horizontal Shift	35
VSL	Vertical Slope	33
VAM	Vertical Amplitude	26
VSC	Vertical S -correction	23
VSH	Vertical Shift	31
H60	Horizontal Shift Offset (NTSC)	9
V60	Vertical Shift Offset (NTSC)	-1

8.3.5 AUDIO

Necessary measuring equipment:

- MTS (Multi-channel Television Sound) generator (e.g. Fluke 54200).
- AC millivolt meter.

ILA (Input Level Alignment)

1. Activate SDAM by pressing the following key sequence on the remote control transmitter: 0 6 2 5 9 6 directly followed by the MENU button (do not allow the display to time out between entries while keying the sequence).
2. Use the MENU UP/DOWN keys to highlight the AUDIO sub menu.
3. Press the MENU LEFT/RIGHT keys to enter the AUDIO sub menu.
4. Use the MENU UP/DOWN keys to select ILA.
5. Apply a BTSC sound signal with a signal strength of 60 dBuV (1 mV_rms) to the aerial input. Measure the output on pin 21 (L_OUT) of IC7841 with an AC millivoltmeter **via a Low Pass Filter** (R= 10 kohm, C= 1.5 nF, measure on the capacitor).
6. Use the MENU LEFT/RIGHT keys to adjust the meter reading to 106 mV_rms ± 2 mV_rms (default ILA value is "31").
7. Press the MENU button to return to the top level SDAM menu.
8. To ensure the ILA setting is saved:
   – Turn the television set 'off' by using the 'POWER' button on the remote control transmitter or the local keyboard.
   – Disconnect the television set from AC power for at least ten seconds.
   – Reconnect the television set to AC power.
   – Turn the television set 'on' by using the 'POWER' button on the remote control transmitter or the local keyboard.

LSA (Low Separation Alignment)

1. Activate SDAM by pressing the following key sequence on the remote control transmitter: 0 6 2 5 9 6 directly followed by the MENU button (do not allow the display to time out between entries while keying the sequence).
2. Use the MENU UP/DOWN keys to highlight the AUDIO sub menu.
3. Press the MENU LEFT/RIGHT keys to enter the AUDIO sub menu.
4. Use the MENU UP/DOWN keys to select LSA.
5. Apply a 300 Hz BTSC sound signal with a signal strength of 60 dBuV (1 mV_rms) to the aerial input (only the left channel of the stereo signal). Measure the output on pin 22 (R_OUT) of IC7841 with an AC millivoltmeter.
6. Use the MENU LEFT/RIGHT keys to adjust the meter reading to a minimum value (default LSA value is "7" for stereo sets, and "0" for mono sets).
7. Press the MENU button to return to the top level SDAM menu.
8. To ensure the LSA setting is saved:
   – Turn the television set 'off' by using the 'POWER' button on the remote control transmitter or the local keyboard.
   – Disconnect the television set from AC power for at least ten seconds.
   – Reconnect the television set to AC power.
   – Turn the television set 'on' by using the 'POWER' button on the remote control transmitter or the local keyboard.

HSA (High Separation Alignment)

1. Activate SDAM by pressing the following key sequence on the remote control transmitter: 0 6 2 5 9 6 directly followed by the MENU button (do not allow the display to time out between entries while keying the sequence).
2. Use the MENU UP/DOWN keys to highlight the AUDIO sub menu.
3. Press the MENU LEFT/RIGHT keys to enter the AUDIO sub menu.
4. Use the MENU UP/DOWN keys to select HSA.
5. Apply a 3 kHz BTSC sound signal with a signal strength of 60 dBuV (1 mV_rms) to the aerial input (only the left channel of the stereo signal). Measure the output on pin 22 (R_OUT) of IC7841 with an AC millivoltmeter.
6. Use the MENU LEFT/RIGHT keys to adjust the meter reading to a minimum value (default HSA value is "31").
7. Press the MENU button to return to the top level SDAM menu.
8. To ensure the HSA setting is saved:
   – Turn the television set 'off' by using the 'POWER' button on the remote control transmitter or the local keyboard.
   – Disconnect the television set from AC power for at least ten seconds.
   – Reconnect the television set to AC power.
   – Turn the television set 'on' by using the 'POWER' button on the remote control transmitter or the local keyboard.

9. Circuit Descriptions, List of Abbreviations, and IC Data Sheets

Index of this chapter:

9.1 Introduction
9.2 Source Selection
9.3 Audio
9.4 Video
9.5 Synchronization
9.6 Deflection
9.7 Power Supply
9.8 Control
9.9 Abbreviation List
9.10 IC Data Sheets

Notes:

- Only **new** circuits (compared to the L01.2 chassis) are described in this chapter. For the other circuit descriptions, see the manual of the L01.2L AA. This manual is available in different languages:
  – 3122 785 11800 = Spanish.
  – 3122 785 11820 = Portuguese.
- Figures can deviate slightly from the actual situation, due to different set executions.
- For a good understanding of the following circuit descriptions, please use the block diagram in chapter 6, and/or the electrical diagrams in chapter 7. Where necessary, you will find a separate drawing for clarification.

9.1 Introduction

The "L03"' chassis is a global TV chassis for the model year 2003 and is used for TV sets with screen sizes from 14 inch to 21 inch, in Super Flat and Real Flat executions. In comparison to its predecessor (the "L01"), this chassis is further simplified: it contains economized executions of the power supply, the video processing (microprocessor), and the audio processing.

The standard architecture consists of a Main panel (called "family board"), a Picture Tube panel, a Side I/O panel, and a Top Control panel. The Main panel consists primarily of conventional components with some surface mounted devices in the audio and video processing part.

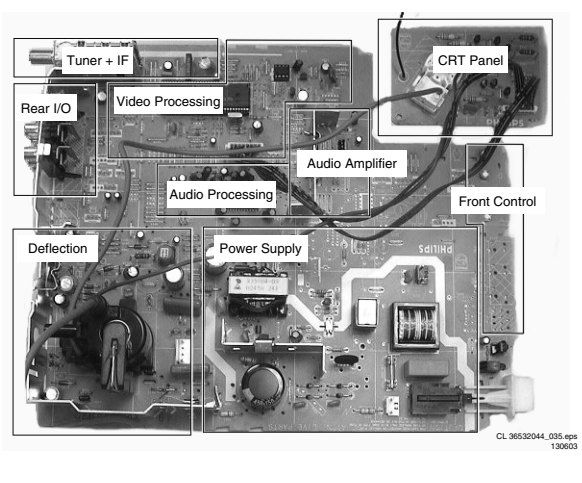

Figure 9-1 Top view family board

The functions for video processing, microprocessor (P), and CC/Teletext (TXT) decoder are combined in one IC (TDA937x), the so-called Ultimate One Chip (UOC). This chip is mounted on the component side of the main panel.

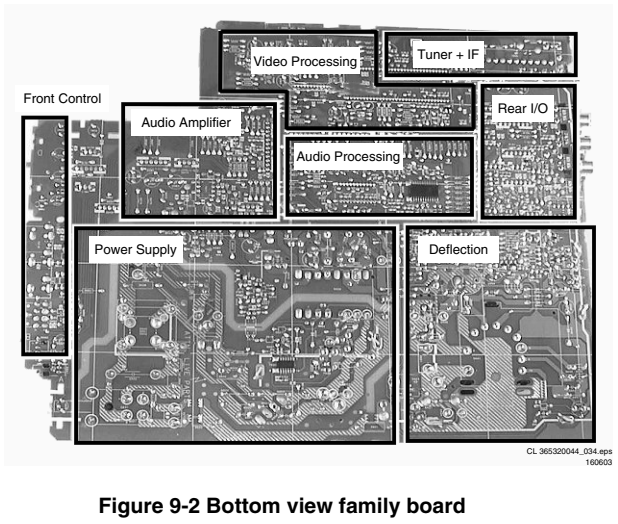

Figure 9-2 Bottom view family board

The L03 can be divided into two basic systems, i.e. mono and stereo sound. While the audio processing for the mono sound is done in the audio block of the UOC, external audio processing ICs are used for stereo sets.

The tuning system features 181 channels with on-screen display. The main tuning system uses a tuner, a microcomputer, and a memory IC mounted on the main panel. The microcomputer communicates with the memory IC, the customer keyboard, remote receiver, tuner, signal processor IC and the audio output IC via the I2C bus. The memory IC retains the settings for favorite stations, customer-preferred settings, and service / factory data.
The on-screen graphics and closed caption decoding are done within the microprocessor where they are added to the main signal.

The chassis uses a Switching Mode Power Supply (SMPS) for the main voltage source. The chassis has a 'hot' ground reference on the primary side and a cold ground reference on the secondary side of the power supply and the rest of the chassis.

9.2 Source Selection

The Source Select is divided mainly into two types, the "Mono Source Select" and the "Stereo Source Select".

- The Mono Source Select, both audio and video, will be done entirely by the UOC and will only be able to select one external audio source.
- As for the Stereo Source Select, the Panasonic IC, which is for BTSC decoding also, has 2 audio source inputs used for source selection, whereas the UOC will take care of the video selection.

9.2.1 Switching Function for Stereo I/O

Video Source Selection
The video source selection is done by the UOC. The video setting for LATAM / NAFTA is rather straightforward: a so called ‘"WYSIWYG" (what you see on the screen, is what you get from the video ouput).

Audio Source Selection
The AN5829 (BTSC decoder) device does the external stereo audio source selection. A maximum of three audio input sources can be selected. AV1 or FRONT is selected by the mechanical switch in the front cinch connector.

The selected external audio source is then fed to the AN5829 AUX1 input (pins 2 and 3). The AV2 is fed directly to AN5829 via AUX2 (pins 23 and 24). Then via I2C, the AN5829 IC source selection can be done.

9.2.2 Switching Function for Mono I/O

For the Mono configuration, only one input pin is available for the UOC.

Video Source Selection
The video switching is similar to the section above.

Audio Source Selection
The audio input (L1_IN) is connected to pin 35 of the UOC.

9.3 Audio

This chassis is targeted for the LATAM market with Mono, Stereo, or SAP sound system.
For the "basic" Mono and Stereo sets, sound processing includes Volume control and AVL.
For stereo sets, IC AN5829S is the BTSC audio signal decoder and AN5891K is the audio processing IC.

9.3.1 Processing

This chassis uses the Intercarrier demodulation concept (one SAW filter for both video and audio). The base band (full bandwidth) BTSC audio signal from the UOC is fed to pin 14 of the stereo decoder. The Pilot detection and SAP detection registers indicate the type of transmitted audio signal such as Mono, Stereo, and/or SAP. Based on this indication, the software controls will help to output the appropriate audio signal at pins 21 and 22. The controls are done by the I2C bus connected to pins 18 and 19.
Internal or External audio (pins 2, 3, 23, and 24) can also be selected by the source selection register. For the selected audio source, the AGC function can be applied. The output is a fixed level output. The volume control function is available via the power amplifier (AN7522/23).

The selected audio output from IC7841 (AN5829) is fed to pins 3 and 22 of IC7821 (AN5891) for audio processing functions, such as Treble, Bass, Volume, Balance, and Surround sound functions. L_out and R_out are then available on pins 12 and 15.
IC7821 is also I2C controllable (pins 13 and 14). An AVL function is also available in this IC, and can be used for sets using this IC. In this case, the AVL function of the AN5829 is disabled. Subwoofer output (optional) is available on pin 20.

9.3.2 Amplifier

The output is fed to the audio amplifier (IC7901 for stereo sets or IC7902 for mono sets). This is a BTL amplifier (Bridge Tied Load), which is actually a class AB amplifier with four transistors for each channel. The advantage of BTL over the standard Class AB amplifier is that it requires a lower supply voltage to deliver a higher output.
The volume level is controlled at this IC (pin 9) by the "VOLUME" control line coming from the microprocessor. After amplification, the audio signal is send to the speaker / headphone output connector.

9.3.3 AVL (Automatic Volume Limiting)

The "Mono AVL" function operates via the UOC. During channel change and source selection, the AVL bit is to be switched "off" and then can resume to the previous state ("on/off") as shown in the timing diagram below.

The "Stereo AVL" function operates via the AGC control of IC AN5829S. During channel change and source selection, the AGC function is to be switched "off" and then can resume to the previous state ("on/off") as shown in timing diagram below.

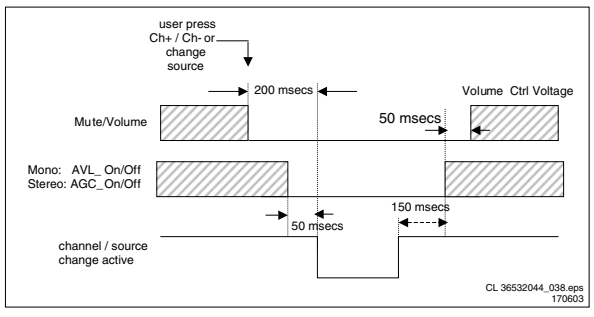

Figure 9-3 AVL timing diagram

9.3.4 Mute

The TV set must mute:
- Whenever a "User Mute" is activated.
- Whenever there is a channel change, RF to RF, RF to AV, AV to RF, and AV to AV (if any). In channel change, MUTE must be activated first before any other activity and un-MUTE must be done after every other activity has been completed.
- Whenever there is a loss in the signal.
- During cold or warm start, MUTE must be activated until all initialization processes are finished.
- When the set is going to STANDBY, MUTE must be activated first before any other activities.

Note:
1. MUTE mentioned above applies for the audio amplifier mute (= PWM volume control mute).
2. The first condition does not apply for the UOC, IC AN5891K, or IC AN5829S.
3. Above conditions refers to both mono and stereo sets.

9.4 Video

For a detailed circuit description of this part, we refer to the L01.2L AA manual (see the beginning of this chapter for the ordering codes). Please note that there can be minor differences in the text (e.g. other item numbers), but the described circuit principle is comparable.

This chassis uses the TDA937x family Ultimate One Chip TV processor (UOC), which is mounted in an SDIP 64 envelope. The various versions of the UOC series combine the function of a video processor together with a microcontroller and US Closed Caption/TXT decoder.

9.5 Synchronization

Inside IC7200 (part D) the vertical and horizontal sync pulses are separated. These "H" and "V" signals are synchronized with the incoming CVBS signal. They are then fed to the H- and V-drive circuits and to the OSD/TXT circuit for synchronization of the On Screen Display and Teletext (CC) information.

9.6 Deflection

For a detailed circuit description of this part, we refer to the L01.2L AA manual (see the beginning of this chapter for the ordering codes). Please note that there can be minor differences in the text (e.g. other item numbers), but the described circuit principle is comparable.

The L03 range consists of TV sets spanning from 14 to 21 inch using the same chassis architecture. For the chassis architecture, the CRTs used do not need East/West Correction. Therefore the geometry correction needed is horizontal shift, vertical slope, vertical amplitude, vertical S-correction, vertical shift and vertical zoom for geometry corrections (with the appropriate offsets required for NTSC channels on PAL sets).

9.7 Power Supply

For a detailed circuit description of this part, we refer to the L01.2L AA manual (see the beginning of this chapter for the ordering codes). Please note that there can be minor differences in the text (e.g. other item numbers), but the described circuit principle is comparable.

9.7.1 Introduction

The supply is a Switching Mode Power Supply (SMPS). The frequency of operation varies with the circuit load. This 'Quasi-Resonant Flyback' behavior has some important benefits compared to a 'hard switching' fixed frequency Flyback converter. The efficiency can be improved up to 90%, which results in lower power consumption. Moreover, the supply runs cooler and safety is enhanced.
The control IC in this power supply is the TEA1506 (L01= TEA1507). Unlike the TEA1507 control IC, the TEA1506 has no internal high voltage start-up source, and therefore needs to be started by means of an external bleeder resistor (R3506 and R3507). The operating voltage for the driver circuit is also taken from the 'hot' side of this transformer.
The switching regulator IC 7520 starts switching the FET 'on' and 'off', to control the current flow through the primary winding of transformer 5520. The energy stored in the primary winding during the 'on' time is delivered to the secondary windings during the 'off' time.
The "MainSupply" line is the reference voltage for the power supply. It is sampled by resistors 3543 and 3544 and fed to the input of the regulator 7540 / 6540. This regulator drives the feedback optocoupler 7515 to set the feedback control voltage on pin 6 of 7520.
The power supply in the set is "on" any time AC power goes to the set.

9.7.2 Derived Voltages

The voltages supplied by the secondary windings of T5520 are:
- "MainSupply" for the horizontal output.
- "V_aux/V_audio" for the audio circuit.
- An optional "DVD_Supply" for future extensions.

Other voltages are provided by the LOT. It supplies -12 V, the tuner voltage, the filament voltage, and the +160 V source for the video drive. These secondary voltages of the LOT are monitored by the "EHT" lines.

9.8 Control

The microprocessor part of the UOC has the complete control and CC/Teletext processing on board. The User menu's and Service Default / Alignment Mode's are generated by the P. Communication to other ICs is done via the I2C-bus.

9.8.1 I2C-Bus

The main control system, which consists of the microprocessor part of the UOC (7200), is linked to the external devices (Tuner, NVM, Audio ICs, etc) by means of the I2C-bus. An internal I2C-bus is used to control other signal processing functions, like video processing, sound IF, vision IF, synchronization, etc.

9.8.2 User Interface

The chassis uses a remote control with RC5 protocol. The incoming signal is connected to pin 67 of the UOC.
The keyboard, connected to UOC pin 8, can also control the set. Button recognition is done via a voltage divider.
The front LED (6691) is connected to an output control line of the microprocessor (pin 11). It is activated to provide the user information about whether or not the set is working correctly (e.g., responding to the remote control, normal operation (USA only) or fault condition)

9.8.3 I/O Selection

For the control of the input and output selections, there are three lines:

STATUS1
This signal provides information to the microprocessor on whether a video signal is available on the SCART1 AV input and output port (only for Europe). This signal is not connected in LATAM/NAFTA sets.

STATUS2
This signal provides information to the microprocessor on whether a video signal is available on the SCART2 AV input and output port (only for Europe).
For sets with an SVHS input it provides the additional information if a Y/C or CVBS source is present.
The presence of an external Y/C source makes this line 'high' while a CVBS source makes the line 'low'.

SEL_AV1_AV2
This is the source select control signal from the microprocessor. This control line is under user control or can be activated by the other two control lines.

9.8.4 Power Supply Control

The Power Supply is interfaced with the microcontroller (UOC) to provide the power supply with the control signals required for burst mode operation in standby and to vary the picture width by adjusting V_BAT.
The microprocessor part is supplied with 3.3 V and 8 V. The 3.3 V is derived from the "V_aux/V_audio" voltage via a 3V3 stabilizer (7493). The 8 V is derived from the 33V tuner voltage via TS7491 and TS7496.
Two signals are used to control the power supply: STD_CON and PW_ADJ.

STD_CON
This signal is generated by the microprocessor when over-current takes place at the "Main" line. This is done to enable the power supply into standby burst mode, and to enable this mode during a protection.
This is of logic "high" (3.3 V) under normal operation of the TV. When the TV set is in Standby (or fault) condition, this signal is a continuous pulse of 5 ms "low" (0 V) and 5 ms "high".
Note: In the L01 chassis this was inverted.

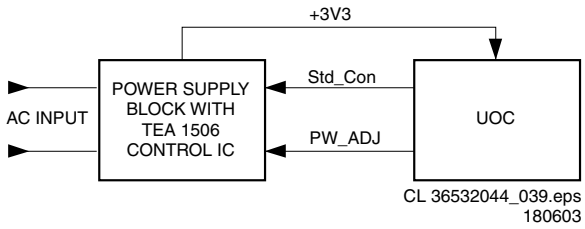

Figure 9-4 Block diagram of power supply interface with UOC

PW_ADJ
This signal is generated by the UOC through a PWM port. This PWM port is configured in Push Pull mode to generate a square wave signal of 0 to 100% duty cycle with a default value of 50% duty cycle.
PW_ADJ will eliminate tolerance and can adjust the picture wide slightly.

9.8.5 Protection Events

Several protection events are controlled by the UOC. In case one of these protections is activated, the set will go to "Standby" mode.

Deflection protections
The main protections for deflection are X-ray protection, frame amplifier failure detection, black current loop stability protection, and +8V auxiliary supply protection. For X-ray protection, the X-ray detection bit, XDT, must always be set to "1" (detection mode). High EHT protection must be triggered via software upon detection of the XPR bit switching to "1". A suitable number of checks are done before putting the set into protection mode in order to prevent false triggering. For service requirements, the Enable Vertical Guard (RGB blanking), EVG, can be disabled (set to "0") although this is not necessary.

The following bits are monitored:
- SUP (Supply voltage indication)
- XPR (X-ray protection)
- EVG (Enable Vertical Guard)
- NDF (Output Vertical Guard)
- BCF (Black Current Failure)

I2C protection
To check whether all I2C IC's are functioning.

9.9 Abbreviation List

2CS	2 Carrier (or Channel) Stereo
ACI	Automatic Channel Installation: algorithm that installs TV sets directly from cable network by means of a predefined TXT page
ADC	Analogue to Digital Converter
AFC	Automatic Frequency Control: control signal used to tune to the correct frequency
AFT	Automatic Fine Tuning
AGC	Automatic Gain Control: algorithm that controls the video input of the feature box
AM	Amplitude Modulation
AP	Asia Pacific
AR	Aspect Ratio: 4 by 3 or 16 by 9
ATS	Automatic Tuning System
AV	External Audio Video
AVL	Automatic Volume Leveler
BCL	Beam Current Limitation
B/G	Monochrome TV system. Sound carrier distance is 5.5 MHz
BTSC	Broadcast Television Standard Committee. Multiplex FM stereo sound system, originating from the USA and used e.g. in LATAM and AP-NTSC countries
CC	Closed Caption
ComPair	Computer aided rePair
CRT	Cathode Ray Tube or picture tube
CSM	Customer Service Mode
CTI	Color Transient Improvement: manipulates steepness of chroma transients
CVBS	Composite Video Blanking and Synchronization
CVI	Component Video Input
DAC	Digital to Analogue Converter
DBX	Dynamic Bass Expander or noise reduction system in BTSC
D/K	Monochrome TV system. Sound carrier distance is 6.5 MHz
DFU	Direction For Use: description for the end user
DNR	Dynamic Noise Reduction
DSP	Digital Signal Processing
DST	Dealer Service Tool: special remote control designed for dealers to enter e.g. service mode
DVD	Digital Versatile Disc
EEPROM	Electrically Erasable and Programmable Read Only Memory
EHT	Extra High Tension
EHT-INFO	Extra High Tension information
EPG	Electronic Programming Guide
EU	Europe
EW	East West, related to horizontal deflection of the set
EXT	External (source), entering the set via SCART or Cinch
FBL	Fast Blanking: DC signal accompanying RGB signals
FILAMENT	Filament of CRT
FM	Field Memory or Frequency Modulation
H	Horizontal sync signal
HP	Headphone
I	Monochrome TV system. Sound carrier distance is 6.0 MHz
I2C	Integrated IC bus
IF	Intermediate Frequency
IIC	Integrated IC bus

ITV	Institutional TV
LATAM	Latin American countries like Brazil, Argentina, etc.
LED	Light Emitting Diode
L/L'	Monochrome TV system. Sound carrier distance is 6.5 MHz. L' is Band I, L is all bands except for Band I
LS	Large Screen or Loudspeaker
M/N	Monochrome TV system. Sound carrier distance is 4.5 MHz
NC	Not Connected
NICAM	Near Instantaneous Compounded Audio Multiplexing. This is a digital sound system, mainly used in Europe.
NTSC	National Television Standard Committee. Color system mainly used in North America and Japan. Color carrier NTSC M/N = 3.579545 MHz, NTSC 4.43 = 4.433619 MHz (this is a VCR norm, it is not transmitted off-air)
NVM	Non Volatile Memory: IC containing TV related data e.g. alignments
OB	Option Bit
OC	Open Circuit
OP	Option Byte
OSD	On Screen Display
PAL	Phase Alternating Line. Color system mainly used in West Europe (color carrier = 4.433619 MHz) and South America (color carrier PAL M = 3.575612 MHz and PAL N = 3.582056 MHz)
PCB	Printed Circuit board
PLL	Phase Locked Loop. Used for e.g. FST tuning systems. The customer can give directly the desired frequency
POR	Power-On Reset
PTP	Picture Tube Panel (or CRT-panel)
RAM	Random Access Memory
RC	Remote Control handset
RGB	Red, Green, and Blue video signals
ROM	Read Only Memory
SDAM	Service Default / Alignment Mode
SAP	Second Audio Program
SC	Sandcastle: pulse derived from sync signals
S/C	Short Circuit
SCL	Serial Clock
SDA	Serial Data
SECAM	SEequence Couleur Avec Memoire. Color system mainly used in France and East Europe. Color carriers = 4.406250 MHz and 4.250000 MHz
SIF	Sound Intermediate Frequency
SS	Small Screen
STBY	Standby
SVHS	Super Video Home System
SW	Software
THD	Total Harmonic Distortion
TXT	Teletext
P	Microprocessor
UOC	Ultimate One Chip
V	Vertical sync signal
V_BAT	Main supply voltage for the deflection stage (mostly 141 V)
V-chip	Violence Chip
VCR	Video Cassette Recorder
WYSIWYR	What You See Is What You Record: record selection that follows main picture and sound
XTAL	Quartz crystal
YC	Luminance (Y) and Chrominance (C) signal

9.10 IC Data Sheets

This section shows the internal block diagrams and pin layouts of ICs that are drawn as "black boxes" in the electrical diagrams (with the exception of "memory" and "logic" ICs).

9.10.1 Diagram A5, AN5829S (IC7841)

■ Block Diagram

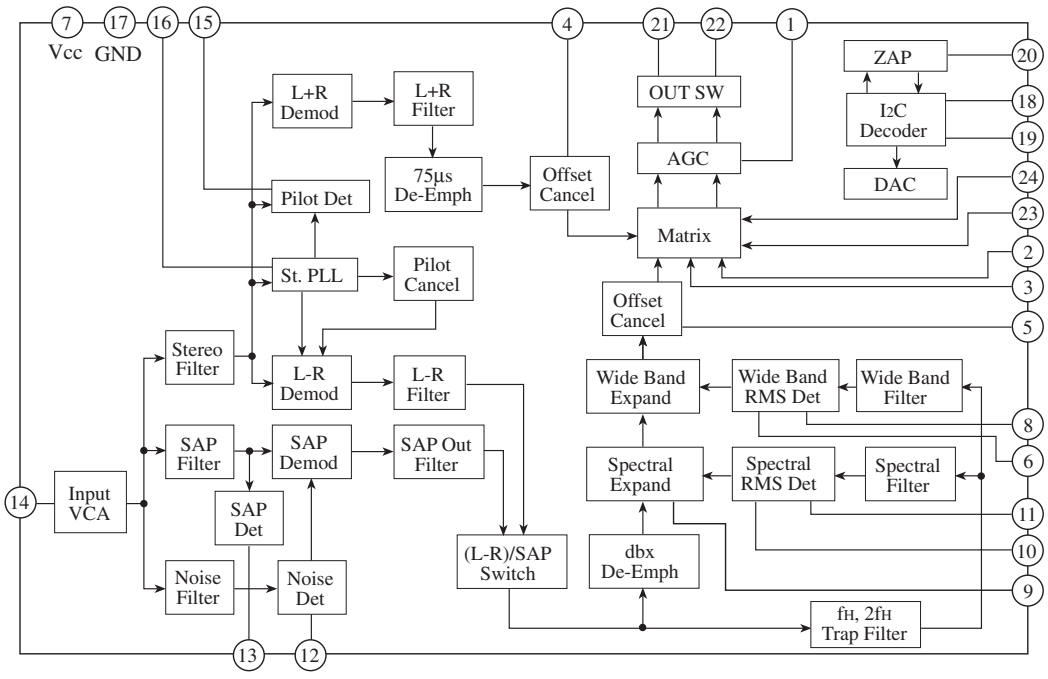

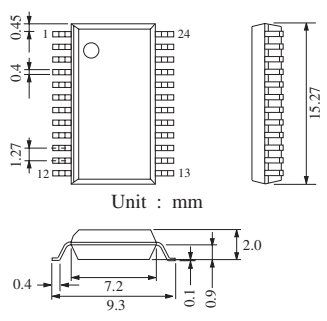

24-Lead PANAFLAT Package (SO-24D)

Test Circuit

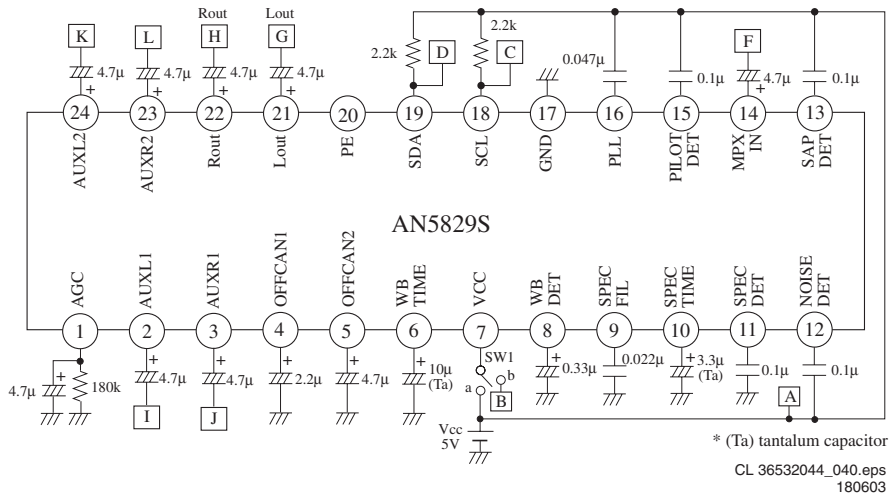

Figure 9-5 Internal Block Diagram and Pin Layout

10. Spare Parts List

Mono Carrier [A]

Various

0025	3139 131 01771	Cable 3p 1000mm
0138	9965 000 23800	BATTERY SPRING
0186	3139 110 38861	Cable 5p/680/5p
0211	9965 000 27334	CONNECTOR VH3P2A
0223	9965 000 27246	AV SOCKET
0225	2422 026 04926	Soc. Mini-DIN 4p f
0250	2422 026 04742	SOC CINCH H 3P
0250	9965 000 27369	RCA SOCKET AV
0252	2422 025 12482	Connector 6p m
0253	4822 267 31014	Soc. headphone
0253	9965 000 17468	Soc. EARPHONE
0254	4822 267 10734	Connector 5p
0255	4822 267 10565	Connector 4p
0272	3139 120 41191	TORX SCREW M3X12
0273	3139 120 41191	TORX SCREW M3X12
1000	2422 542 90141	TUN V+U PLL
1000	9965 000 23791	TUNER TEDH9-251A
1001	2422 549 44327	FIL 3MHZ75 F072TPL-A
1001	9965 000 23794	SAW M1971M
1011	9965 000 17540	Switch
1012	9965 000 17540	Switch
1013	9965 000 17540	Switch
1014	9965 000 17540	Switch
1121	4822 267 10735	Connector 3p
1124	2422 025 12482	Connector 6p m
1201	4822 242 81978	TPS4,5MB-TF21
1201	9965 000 23325	Crystall 4.5MB
1500	2422 090 01101	Soc Fuse 1P Female
1500	9965 000 23784	Fuse holder
1501	2422 090 01101	Soc Fuse 1P Female
1501	9965 000 23784	Fuse holder
1504	2422 086 10914	Fuse 4A 250V
1504	9965 000 17570	FUSE T4E 250V
1600	4822 276 13775	Switch 1p 0.1A 12V
1600	9965 000 17540	Switch
1601	4822 276 13775	Switch 1p 0.1A 12V
1601	9965 000 17540	Switch
1602	4822 276 13775	Switch 1p 0.1A 12V
1602	9965 000 17540	Switch
1603	4822 276 13775	Switch 1p 0.1A 12V
1603	9965 000 17540	Switch
1606	9965 000 17540	Switch
1621	2422 543 01268	XTL 12MHZ 20P
1621	9965 000 23770	Crystal 12MHZ
1810	4822 267 10735	Connector 3p
1900	9301 843 10329	A51EHW135X47
1900	9965 000 27250	CRT A51ERF135X82

⊣⊢

2001	2238 586 59812	100nF 20% 50V 0603
2001	9965 000 27286	100nF 10% 50V 0603
2002	4822 124 41643	100µF 20% 16V
2002	9965 000 14069	100µF 20% 16V
2003	4822 122 33761	22pF 5% 50V
2003	9965 000 14011	22pF 5% 50V
2004	4822 122 33761	22pF 5% 50V
2004	9965 000 14011	22pF 5% 50V
2005	3198 024 44730	47nF 50V 0603
2005	9965 000 27374	47nF 80-20% 50V
2006	4822 124 80195	470µF 20% 10V
2006	9965 000 17508	470µF 20% 10V
2007	4822 124 40248	10µF 20% 63V
2007	9965 000 14075	10µF 20% 50V
2101	3198 017 44740	470nF 10V 0603
2101	9965 000 27228	470nF 80/-20% 16V
2102	4822 122 33761	22pF 5% 50V
2102	9965 000 14011	22pF 5% 50V
2103	4822 126 14241	330pF 0603 50V
2103	9965 000 27243	330pF -10% 50V
2104	4822 126 14241	330pF 0603 50V
2104	9965 000 27243	330pF -10% 50V
2105	4822 124 21732	10UF 20% 25V
2105	9965 000 27241	10µF /-20% 25V
2106	4822 124 21732	10UF 20% 25V
2106	9965 000 27241	10µF /-20% 25V
2111	4822 122 33761	22pF 5% 50V
2111	9965 000 14011	22pF 5% 50V
2112	4822 122 33761	22pF 5% 50V
2112	9965 000 14011	22pF 5% 50V
2113	4822 122 33761	22pF 5% 50V
2113	9965 000 14011	22pF 5% 50V
2122	4822 126 14241	330pF 0603 50V
2122	9965 000 27243	330pF -10% 50V
2123	3198 017 41050	1µF 10V 0603
2123	9965 000 24287	1µF 80/-20% 16V
2124	4822 126 14241	330pF 0603 50V
2124	9965 000 27243	330pF -10% 50V
2125	3198 017 41050	1µF 10V 0603
2125	9965 000 24287	1µF 80/-20% 16V
2132	3198 017 41050	1µF 10V 0603
2132	9965 000 24287	1µF 80/-20% 16V
2134	3198 017 41050	1µF 10V 0603
2134	9965 000 24287	1µF 80/-20% 16V
2135	4822 122 33761	22pF 5% 50V
2135	9965 000 14011	22pF 5% 50V
2136	4822 122 33761	22pF 5% 50V
2136	9965 000 14011	22pF 5% 50V
2161	4822 126 14491	2.2µF 10V 0805
2161	9965 000 23838	2.2µF 20% 16V
2163	4822 126 14491	2.2µF 10V 0805
2163	9965 000 23838	2.2µF 20% 16V
2171	4822 126 13512	330pF 10% 50V
2171	9965 000 27365	330 PF 50V /-10% 140
2172	4822 126 13512	330pF 10% 50V
2172	9965 000 27365	330 PF 50V /-10% 140
2175	4822 122 33524	22PF 5% 50V
2175	9965 000 27364	22 PF 50V /-5% NPO
2176	5322 122 32311	470pF 10% 100V
2176	9965 000 17876	470pF 10% 50V
2177	4822 124 40248	10µF 20% 63V
2177	9965 000 14075	10µF 20% 50V
2178	5322 122 32311	470pF 10% 100V
2178	9965 000 17876	470pF 10% 50V
2179	4822 124 40248	10µF 20% 63V
2179	9965 000 14075	10µF 20% 50V
2181	9965 000 14011	22pF 5% 50V
2182	9965 000 27243	330pF -10% 50V
2183	9965 000 27243	330pF -10% 50V
2201	4822 126 13193	4.7nF 10% 63V
2201	9965 000 27305	4700PF 50V /-10% 0603
2202	4822 126 14241	330pF 0603 50V
2202	9965 000 20346	330 PF 50V +/-5% 0603
2203	3198 017 44740	470nF 10V 0603
2203	9965 000 27228	470nF 80/-20% 16V
2205	4822 124 12255	10µF 20% 50V
2205	9965 000 14075	10µF 20% 50V
2206	2222 867 15339	33pF 5% 50V 0603
2206	9965 000 27302	CAP 33PF 50V /-5%
2207	2238 586 59812	100nF 20% 50V 0603
2207	9965 000 27286	100nF 10% 50V 0603
2208	2238 586 59812	100nF 20% 50V 0603
2208	9965 000 27286	100nF 10% 50V 0603
2209	2238 586 59812	100nF 20% 50V 0603
2209	9965 000 27286	100nF 10% 50V 0603
2210	4822 126 13879	220nF +80-20% 16V
2210	9965 000 27900	220nF 50V 80-20%0603
2211	3198 016 31020	1nF 25V 0603
2211	9965 000 27244	1NF 25V /-5%
2212	4822 126 13879	220nF +80-20% 16V
2212	9965 000 27900	220nF 50V 80-20%0603
2231	2238 916 15641	22nF 10% 25V 0603
2231	9965 000 27245	22nF /-10% 25V
2232	2238 916 15641	22nF 10% 25V 0603
2232	9965 000 27245	22nF /-10% 25V
2233	2238 916 15641	22nF 10% 25V 0603
2233	9965 000 27245	22nF /-10% 25V
2405	4822 124 11936	47µF 20% 160V
2405	9965 000 17512	47µF 20% 160V
2406	2022 333 00258	250V S 270N PM5 B
2406	9965 000 26036	27UF 250V +/-5%
2408	9965 000 17516	0.56µF 5% 250V
2420	2238 586 59812	100nF 20% 50V 0603
2420	9965 000 27286	100nF 10% 50V 0603
2421	2238 586 59812	100nF 20% 50V 0603
2421	9965 000 27286	100nF 10% 50V 0603
2423	2022 333 00267	1K6V S 8N2 PM5 B
2423	9965 000 27285	M.PP 8.2NF 1.6KV /-5%
2424	4822 126 13865	390pF 10% 2kV
2424	9965 000 15590	1000pF 10% 2kV
2424	9965 000 27284	390 PF 2KV /-10%
2426	3198 016 31020	1nF 25V 0603
2426	9965 000 27244	. 1NF 25V /-5%
2427	2238 586 59812	100nF 20% 50V 0603
2427	9965 000 24622	100nF 25V +80%-20%
2428	4822 124 80231	47UF20% 16V
2428	9965 000 23748	47µF 20% 16V
2429	4822 126 13879	220nF +80-20% 16V
2429	9965 000 27287	220nF 16V 80%/-20
2441	4822 121 51305	15nF 10% 50V
2441	9965 000 14080	33nF 5% 50V
2441	9965 000 17520	15nF 63V +/-5%
2444	4822 124 80791	470µF 20% 16V
2444	9965 000 14599	470µF 20% 16V
2446	4822 124 80791	470µF 20% 16V
2446	9965 000 14599	470µF 20% 16V
2447	2020 012 93596	22µF 20% 250V
2447	9965 000 24628	22µF 250V +/-20%
2452	2238 916 15641	22nF 10% 25V 0603
2452	9965 000 27245	22nF /-10% 25V
2452	9965 000 27920	100nF /-10% 25V
2455	4822 124 11947	10µF 20% 16V
2455	9965 000 27860	10µF /-20% 16V
2457	4822 122 31177	470pF 10% 500V
2457	9965 000 17562	470pF 10% 500V
2460	4822 121 41754	82NF 10% 100V
2460	9965 000 27261	82nF /20% 250V
2460	9965 000 27905	68nF /-5% 250V
2461	3198 016 31020	1nF 25V 0603
2461	9965 000 27244	. 1NF 25V /-5%
2462	3198 016 31020	1nF 25V 0603
2462	9965 000 27244	. 1NF 25V /-5%
2463	4822 124 41751	47µF 20% 50V
2463	9965 000 14076	47µF 20% 50V
2464	4822 126 13881	470pF 5% 50V
2464	9965 000 14012	470PF 50V +/-5% 0603
2465	2022 031 00127	160V S 10U
2465	9965 000 27904	10UF/160V/ /20%
2470	2022 318 00126	63V S 15N
2470	9965 000 17520	15nF 63V +/-5%
2473	4822 126 13881	470pF 5% 50V
2473	9965 000 14012	470PF 50V +/-5% 0603
2481	2020 552 94427	100pF 5% 50V
2481	9965 000 13965	100PF 50V +/-5% C
2482	3198 017 41050	1µF 10V 0603
2482	9965 000 24287	1µF 80/-20% 16V
2483	2020 552 96305	4.7µF 20-80% 10V
2483	9965 000 23767	4.7µF +80/-20% 16V
2484	2238 586 59812	100nF 20% 50V 0603
2484	9965 000 27286	100nF 10% 50V 0603
2485	3198 017 41050	1µF 10V 0603
2485	9965 000 24287	1µF 80/-20% 16V
2486	4822 126 13193	4.7nF 10% 63V
2486	9965 000 27305	4700PF 50V /-10% 0603
2487	4822 126 14238	2.2nF 50V 0603
2487	9965 000 27341	2200PF 50V /-10% 0603
2488	5322 121 42386	100nF 5% 63V
2488	9965 000 27340	P.E. CBB11-50V-104J
2489	5322 126 11578	1nF 10% 50V 0603
2489	9965 000 20356	1000 PF 50V +/-10% B
2491	4822 124 80195	470µF 20% 10V
2491	9965 000 17508	470µF 20% 10V
2492	3198 029 32290	22µF 20% 25V
2492	9965 000 27339	CAP.22UF 25V /-20%
2493	4822 124 80195	470µF 20% 10V
2493	9965 000 17508	470µF 20% 10V
2494	4822 124 81286	47µF 20% 16V
2496	5322 126 11578	1nF 10% 50V 0603
2496	9965 000 20356	1000 PF 50V +/-10% B
2497	5322 126 11578	1nF 10% 50V 0603
2497	9965 000 20356	1000 PF 50V +/-10% B
2500	2222 338 22474	470nF 20% 275V
2500	9965 000 27329	0.47UF 250VAC /-20%
2501	4822 126 12793	2.2nF 10% 2kV
2501	9965 000 24631	2200 PF 1KV +/-10%
2502	4822 126 12793	2.2nF 10% 2kV
2502	9965 000 24631	2200 PF 1KV +/-10%
2503	4822 124 12443	220UF 20% 450V
2503	9965 000 22931	220 UF 450V +/-20%
2503	9965 000 27926	150 UF 450V /-20%
2505	4822 126 12793	2.2nF 10% 2kV
2505	9965 000 24631	2200 PF 1KV +/-10%
2515	2020 554 90199	1.5nF 250V
2515	9965 000 27327	250V/1.5NF/ /-20%
2520	5322 126 11583	10nF 10% 50V 0603
2520	9965 000 27300	0.01 UF 50V /-10% 06
2521	4822 124 81151	22µF 50V
2522	5322 126 11578	1nF 10% 50V 0603
2522	9965 000 20356	1000 PF 50V +/-10% B
2523	4822 126 13862	1.5nF 10% 2kV
2523	9965 000 27928	CAP 1800PF/ /-10%
2523	9965 000 27992	CAP 1500PF/ /-10%
2525	4822 126 13909	680pF 10% 50V 0603
2525	9965 000 27331	680PF 50VDC /-10%
2527	4822 126 14225	56pF 5% 50V 0603
2527	9965 000 27330	56 PF 50V /-5% 0603
2528	4822 124 81151	22µF 50V
2540	3198 017 31530	15nF 20% 50V 0603
2540	9965 000 27301	0.015UF 50V /-10%
2541	4822 126 13193	4.7nF 10% 63V
2541	9965 000 27305	4700PF 50V /-10% 0603
2542	3198 017 44740	470nF 10V 0603

2542	9965 000 27228	470nF 80/-20% 16V
2543	5322 126 11578	1nF 10% 50V 0603
2543	9965 000 20356	1000 PF 50V +/-10% B
2560	5322 122 32818	2.2nF 10% 100V
2560	9965 000 15104	2.2nF 10% 50V
2561	4822 123 14025	2200µF 20% 16V
2561	4822 124 40196	220µF 20% 16V
2562	4822 126 13451	2.2nF 10% 2kV
2562	9965 000 24631	2200 PF 1KV +/-10%
2564	4822 124 42336	47µF 20% 160V
2564	9965 000 17512	47µF 20% 160V
2584	4822 126 12267	470pF 10% 2kV
2584	9965 000 27925	220 PF 1KV /-10%
2584	9965 000 27991	470 PF 1KV /-10%
2585	5322 126 11578	1nF 10% 50V 0603
2585	9965 000 20356	1000 PF 50V +/-10% B
2602	2020 552 96664	0603 NP0 50V 33P
2602	9965 000 27302	CAP 33PF 50V /-5%
2603	2020 552 96664	0603 NP0 50V 33P
2603	9965 000 27302	CAP 33PF 50V /-5%
2604	4822 124 11947	10µF 20% 16V
2604	9965 000 27860	10µF /-20% 16V
2605	2238 586 59812	100nF 20% 50V 0603
2605	9965 000 27286	100nF 10% 50V 0603
2607	2238 586 59812	100nF 20% 50V 0603
2607	9965 000 27286	100nF 10% 50V 0603
2608	3198 017 41050	1µF 10V 0603
2608	9965 000 24287	1µF 80/-20% 16V
2609	2238 586 59812	100nF 20% 50V 0603
2609	9965 000 27286	100nF 10% 50V 0603
2612	4822 124 40196	220µF 20% 16V
2612	9965 000 14070	220µF 20% 16V
2615	2238 586 55622	0603 X7R 50V 820P
2615	9965 000 27342	820PF 50V /-10%
2616	4822 124 11947	10µF 20% 16V
2616	9965 000 27860	10µF /-20% 16V
2641	3198 016 31020	1nF 25V 0603
2641	9965 000 27244	. 1NF 25V /-5%
2642	3198 016 31020	1nF 25V 0603
2642	9965 000 27244	. 1NF 25V /-5%
2643	4822 126 13883	220pF 5% 50V
2643	9965 000 20349	220PF 50V C 0603 /-5%
2691	4822 124 41584	100µF 20% 10V
2691	9965 000 15805	100µF 20% 10V
2821	4822 124 41584	100µF 20% 10V
2821	9965 000 15805	100µF 20% 10V
2822	3198 017 33330	33nF 20% 16V 0603
2822	9965 000 27303	0.033 UF 50V /-10% 06
2823	5322 124 40641	10µF 20% 100V
2823	9965 000 15089	10µF 20% 100V
2824	5322 124 40641	10µF 20% 100V
2824	9965 000 15089	10µF 20% 100V
2825	2238 786 55644	39nF 10% 16V X7R 0603
2825	9965 000 27304	0.039UF 50V /-10%0603
2826	3198 017 31530	15nF 20% 50V 0603
2826	9965 000 27301	0.015UF 50V /-10%
2827	3198 017 33330	33nF 20% 16V 0603
2827	9965 000 27303	0.033 UF 50V /-10% 06
2828	5322 126 11583	10nF 10% 50V 0603
2828	9965 000 27300	0.01 UF 50V /-10% 06
2829	2238 586 59812	100nF 20% 50V 0603
2829	9965 000 27286	100nF 10% 50V 0603
2830	5322 124 40641	10µF 20% 100V
2830	9965 000 15089	10µF 20% 100V
2831	5322 124 40641	10µF 20% 100V
2831	9965 000 15089	10µF 20% 100V
2832	5322 124 40641	10µF 20% 100V
2832	9965 000 15089	10µF 20% 100V
2833	5322 124 40641	10µF 20% 100V
2833	9965 000 15089	10µF 20% 100V
2835	5322 126 11583	10nF 10% 50V 0603
2835	9965 000 27300	0.01 UF 50V /-10% 06
2836	2238 586 59812	100nF 20% 50V 0603
2836	9965 000 27286	100nF 10% 50V 0603
2837	3198 017 44740	470nF 10V 0603
2837	9965 000 27228	470nF 80/-20% 16V
2838	5322 124 40641	10µF 20% 100V
2838	9965 000 15089	10µF 20% 100V
2841	2020 552 96305	4.7µF 20-80% 10V
2841	9965 000 23767	4.7µF +80/-20% 16V
2844	4822 124 22652	2.2µF 20% 50V
2844	9965 000 15087	2.2µF 20% 50V
2845	4822 124 12032	4.7µF 20% 50V
2845	9965 000 14039	4.7µF 20% 50V
2846	5322 124 40641	10µF 20% 100V
2846	9965 000 15089	10µF 20% 100V
2847	4822 124 23052	100UF20% 16V
2847	9965 000 14588	100 UF 16V +/-20%
2848	2238 786 19856	330nF 20% 160V 0603
2848	9965 000 27307	0.33UF 16VDC 80%/-20
2849	2238 916 15641	22nF 10% 25V 0603
2849	9965 000 27245	22nF /-10% 25V
2850	2020 009 90103	50V S 3U3 PM20 A
2850	9965 000 27299	3.3 UF 50V /-20%
2851	2238 586 59812	100nF 20% 50V 0603
2851	9965 000 27286	100nF 10% 50V 0603
2852	2238 586 59812	100nF 20% 50V 0603
2852	9965 000 27286	100nF 10% 50V 0603
2855	3198 017 41050	1µF 10V 0603
2855	9965 000 24287	1µF 80/-20% 16V
2856	3198 017 41050	1µF 10V 0603
2856	9965 000 24287	1µF 80/-20% 16V
2857	3198 017 34730	47nF 16V 0603
2857	9965 000 27306	47NF 50V /-20% 0603
2858	3198 017 41050	1µF 10V 0603
2858	9965 000 24287	1µF 80/-20% 16V
2859	3198 017 41050	1µF 10V 0603
2859	9965 000 24287	1µF 80/-20% 16V
2860	2238 586 59812	100nF 20% 50V 0603
2860	9965 000 27286	100nF 10% 50V 0603
2861	4822 126 13883	220pF 5% 50V
2861	9965 000 20349	220PF 50V C 0603 /-5%
2862	4822 126 13883	220pF 5% 50V
2862	9965 000 20349	220PF 50V C 0603 /-5%
2863	4822 126 13883	220pF 5% 50V
2863	9965 000 20349	220PF 50V C 0603 /-5%
2903	4822 124 21913	1µF 20% 63V
2903	9965 000 14037	1µF 20% 50V
2904	3198 017 44740	470nF 10V 0603
2904	9965 000 27228	470nF 80/-20% 16V
2906	3198 017 44740	470nF 10V 0603
2906	9965 000 27228	470nF 80/-20% 16V
2908	4822 124 22726	4.7µF 20% 35V
2908	9965 000 14039	4.7µF 20% 50V
2909	4822 124 40248	10µF 20% 63V
2909	9965 000 14075	10µF 20% 50V
2950	4822 126 14247	1.5nF 50V 0603
2950	9965 000 14010	1500PF 50V +/-10% B
2951	3198 016 38210	820pF 25V 0603
2951	9965 000 27898	820PF 50V /-5% 0603
2952	3198 016 38210	820pF 25V 0603
2952	9965 000 27898	820PF 50V /-5% 0603
2981	9965 000 14075	10µF 20% 50V
2982	9965 000 27906	.470PF 50V /-10%
2983	9965 000 14075	10µF 20% 50V
2984	9965 000 27906	.470PF 50V /-10%

⌐WW⌐

3001	4822 051 30152	1.5Ω 5% 0.062W
3001	9965 000 27373	1.5K 1/10W /-5% 06
3002	5322 117 13056	8.2kΩ 1% 0.063W 0603
3002	9965 000 27227	8.2K 1/10W /-5% 06
3003	4822 051 30101	100Ω 5% 0.062W
3003	9965 000 27232	100 1/10W 0603
3004	4822 051 30101	100Ω 5% 0.062W
3004	9965 000 27232	100 1/10W 0603
3005	4822 116 52175	100Ω 5% 0.5W
3005	9965 000 14049	100Ω 5% 0.16W
3011	9965 000 27292	.200 1/10W /-1% 06
3012	9965 000 27294	430 1/10W /-1% 06
3013	9965 000 27293	2.2K 1/10W /-1% 06
3014	9965 000 27292	.200 1/10W /-1% 06
3015	9965 000 27296	.820 1/10W /-1% 06
3016	9965 000 27291	.120 1/10W /-1% 06
3101	4822 051 30689	68Ω 5% 0.063W 0603
3101	9965 000 27239	.68 1/10W /-5% 06
3102	4822 051 30102	1kΩ 5% 0.062W
3102	9965 000 27233	1K 1/10W 0603
3103	4822 051 30151	150Ω 5% 0.062W
3103	9965 000 27234	150 1/10W 0603
3104	4822 117 12891	220kΩ 1%
3104	9965 000 27235	220K 1/10W 0603
3105	4822 051 30151	150Ω 5% 0.062W
3105	9965 000 27234	150 1/10W 0603
3106	4822 117 12891	220kΩ 1%
3106	9965 000 27235	220K 1/10W 0603
3111	4822 051 30759	75Ω 5% 0.062W
3111	9965 000 27240	.75 1/10W 0603
3112	4822 051 30101	100Ω 5% 0.062W
3112	9965 000 27232	100 1/10W 0603
3113	4822 051 30759	75Ω 5% 0.062W
3113	9965 000 27240	.75 1/10W 0603
3114	4822 051 30101	100Ω 5% 0.062W
3114	9965 000 27232	100 1/10W 0603
3115	4822 051 30759	75Ω 5% 0.062W
3115	9965 000 27240	.75 1/10W 0603
3116	4822 051 30101	100Ω 5% 0.062W
3116	9965 000 27232	100 1/10W 0603
3122	4822 051 30008	Jumper 0603
3122	9965 000 27224	JMP1/10W /-5% 0603
3123	4822 051 30151	150Ω 5% 0.062W
3123	9965 000 27224	JMP1/10W /-5% 0603
3123	9965 000 27234	150 1/10W 0603
3124	4822 117 12925	47kΩ 1% 0.063W 0603
3124	9965 000 27237	.47K 1/10W 0603
3125	4822 051 30151	150Ω 5% 0.062W
3125	9965 000 27224	JMP1/10W /-5% 0603
3125	9965 000 27234	150 1/10W 0603
3126	4822 117 12925	47kΩ 1% 0.063W 0603
3126	9965 000 27237	.47K 1/10W 0603
3135	4822 051 30759	75Ω 5% 0.062W
3135	9965 000 27240	.75 1/10W 0603
3136	4822 116 52175	100Ω 5% 0.5W
3136	9965 000 14049	100Ω 5% 0.16W
3137	4822 051 30759	75Ω 5% 0.062W
3137	9965 000 27240	.75 1/10W 0603
3138	4822 051 30101	100Ω 5% 0.062W
3138	9965 000 27232	100 1/10W 0603
3142	4822 116 52175	100Ω 5% 0.5W
3142	9965 000 14049	100Ω 5% 0.16W
3143	4822 111 31025	75Ω 5% 0.16W
3143	4822 116 52201	75Ω 5% 0.5W
3144	4822 116 83868	150Ω 5% 0.5W
3144	9965 000 12485	150Ω 5% 0.16W
3145	4822 111 31023	47k 5% 0.16W
3145	4822 116 83884	47kΩ 5% 0.5W
3146	4822 116 83868	150Ω 5% 0.5W
3146	9965 000 12485	150Ω 5% 0.16W
3147	4822 111 31023	47k 5% 0.16W
3147	4822 116 83884	47kΩ 5% 0.5W
3148	4822 116 83876	270Ω 5% 0.5W
3148	9965 000 15050	270Ω 5% 0.16W
3149	4822 116 83876	270Ω 5% 0.5W
3149	9965 000 15050	270Ω 5% 0.16W
3161	4822 051 30333	33kΩ 5% 0.062W
3161	9965 000 27236	33K 1/10W 0603
3162	4822 051 30103	10kΩ 5% 0.062W
3162	9965 000 27225	10K 1/10W 0603
3163	4822 051 30102	1kΩ 5% 0.062W
3163	9965 000 27233	1K 1/10W 0603
3164	4822 050 13303	33kΩ 1% 0,4W
3164	4822 050 23303	33kΩ 1% 0.6W
3182	9965 000 14049	100Ω 5% 0.16W
3183	9965 000 12485	150Ω 5% 0.16W
3184	9965 000 27237	.47K 1/10W 0603
3185	9965 000 12485	150Ω 5% 0.16W
3186	9965 000 27237	.47K 1/10W 0603
3201	4822 051 30392	3.9Ω 5% 0.063W 0603
3201	9965 000 27298	.3.9K 1/10W /-5%
3202	4822 051 30101	100Ω 5% 0.062W
3202	9965 000 27232	100 1/10W 0603
3203	4822 051 30102	1kΩ 5% 0.062W
3203	9965 000 27233	1K 1/10W 0603
3204	2322 702 60829	82Ω 5% 0603
3204	9965 000 27338	.82 0HM 1/10W /-5% 06
3205	4822 051 30271	270Ω 5% 0.062W
3205	9965 000 27336	.270 1/10W /-5% 06
3206	4822 051 30102	1kΩ 5% 0.062W
3206	9965 000 27233	1K 1/10W 0603
3207	4822 051 30391	390Ω 5% 0.062W
3207	9965 000 27254	390 1/10W 0603
3208	4822 053 10561	560Ω 5% 1W
3208	4822 116 52226	560Ω 5% 0.5W
3209	4822 051 30471	47Ω 5% 0.062W
3209	9965 000 27282	.470 1/10W /-5%
3210	4822 116 52175	100Ω 5% 0.5W
3210	9965 000 14049	100Ω 5% 0.16W
3231	4822 051 30561	560Ω 5% 0.062W
3231	9965 000 27238	560 1/10W 0603
3232	4822 050 11002	1kΩ 1% 0.4W
3232	9965 000 12519	1k 5% 0.16W
3402	4822 117 11824	2K2 5%
3402	9965 000 27276	NFR 2200 1/2W /-5%
3403	4822 117 11824	2K2 5%
3403	9965 000 27276	NFR 2200 1/2W /-5%
3403	9965 000 27918	NFR 470 1/3W /-5%
3410	4822 111 30976	68k 5% 0.16W
3410	4822 116 52297	68kΩ 5% 0.5W
3422	4822 053 20334	330kΩ 5% 0.25W
3422	9965 000 23746	330kΩ 0.25W
3424	4822 053 11479	47R00 5% 2W
3424	9965 000 27278	M.O. 47 2W /-5%
3425	4822 050 22201	220Ω 1% 0.6W
3425	9965 000 15675	220Ω 5% 1W
3426	4822 116 52195	47Ω 5% 0.5W
3426	9965 000 12593	47Ω 5% 0.16W
3428	4822 116 52199	68Ω 5% 0.5W
3428	9965 000 13958	68Ω 5% 0.17W
3430	4822 051 30102	1kΩ 5% 0.062W
3430	9965 000 27233	1K 1/10W 0603
3432	4822 051 30471	47Ω 5% 0.062W
3432	9965 000 27282	.470 1/10W /-5%
3439	9965 000 23745	150kΩ 1% 0.5W
3440	9965 000 27281	.33K 1/10W /-1% 06
3441	4822 051 30273	27kΩ 5% 0.062W
3441	9965 000 27280	.27K 1/10W /-5%
3441	9965 000 27919	.56K 1/10W /-5%
3442	4822 116 52234	100kΩ 5% 0.5W
3442	9965 000 15041	100k 5% 0.16W
3443	4822 052 10338	3.3Ω 5% 0.33W

3443	9965 000 27277	NFR 3.3 1/3W /-5%
3444	4822 052 10338	3.3Ω 5% 0.33W
3444	9965 000 27277	NFR 3.3 1/3W /-5%
3445	4822 052 10108	1Ω 5% 0.33W
3445	9965 000 27258	NFR 1 1/3W /-5%
3446	4822 052 10108	1Ω 5% 0.33W
3446	9965 000 27258	NFR 1 1/3W /-5%
3447	4822 117 12925	47kΩ 1% 0.063W 0603
3447	9965 000 27235	220K 1/10W 0603
3447	9965 000 27237	47K 1/10W 0603
3448	4822 052 10108	1Ω 5% 0.33W
3448	9965 000 27258	NFR 1 1/3W /-5%
3449	4822 116 52264	27kΩ 5% 0.5W
3449	9965 000 17647	27k 5% 0.16W
3450	4822 116 52264	27kΩ 5% 0.5W
3450	9965 000 17647	27k 5% 0.16W
3451	4822 117 12903	1.8kΩ 1% 0.063W 0603
3451	9965 000 27227	8.2K 1/10W /-5% 06
3451	9965 000 27279	1.8K 1/10W /-5% 06
3452	4822 116 83866	1MΩ 5% 0.5W
3452	9965 000 12626	1.0mΩ 5% 0.17W
3453	4822 117 13632	100kΩ 1% 0603 0.62W
3453	9965 000 27226	100K 1/10W 0603
3454	4822 051 30103	10kΩ 5% 0.062W
3454	9965 000 27225	10K 1/10W 0603
3455	4822 051 30681	680Ω 5% 0.062W
3455	9965 000 27260	2.2K 1/10W 0603
3455	9965 000 27283	680 1/10W 0603
3459	4822 116 52245	150kΩ 5% 0.5W
3459	9965 000 23744	150kΩ 5% 0.17W
3460	4822 117 13632	100kΩ 1% 0603 0.62W
3460	9965 000 27226	100K 1/10W 0603
3460	9965 000 27237	47K 1/10W 0603
3461	4822 051 30222	2.2kΩ 5% 0.062W
3461	9965 000 27260	2.2K 1/10W 0603
3462	4822 051 30105	1MΩ 5% 0.062W
3462	9965 000 27259	1M 1/10W 0603
3463	4822 051 30222	2.2kΩ 5% 0.062W
3463	9965 000 27260	2.2K 1/10W 0603
3464	4822 116 52256	2.2kΩ 5% 0.5W
3464	9965 000 12515	2.2k 5% 0.16W
3465	4822 051 30102	1kΩ 5% 0.062W
3465	9965 000 27233	1K 1/10W 0603
3466	4822 051 30102	1kΩ 5% 0.062W
3466	9965 000 27233	1K 1/10W 0603
3468	4822 116 52219	330Ω 5% 0.5W
3468	9965 000 12592	330Ω 5% 0.16W
3470	4822 052 10108	1Ω 5% 0.33W
3470	9965 000 27258	NFR 1 1/3W /-5%
3471	4822 116 83872	220Ω 5% 0.5W
3471	9965 000 12549	220Ω 55 0.16W
3472	4822 116 83872	220Ω 5% 0.5W
3472	9965 000 12549	220Ω 55 0.16W
3473	4822 050 23308	3.3Ω 1% 0.6W
3473	9965 000 23826	3.3Ω 1% 0.5W
3474	4822 050 23308	3.3Ω 1% 0.6W
3474	9965 000 23826	3.3Ω 1% 0.5W
3475	4822 050 21003	10kΩ 1% 0.6W
3475	9965 000 14050	10k 5% 0.16W
3476	4822 111 31041	8.2k 5% 0.16W
3476	4822 116 52303	8.2kΩ 5% 0.5W
3478	4822 116 80176	1Ω 5% 0.5W
3478	4822 116 82805	1Ω 5% 0.17W
3479	4822 052 10189	18R00 5% 0,33W
3479	9965 000 27223	NFR 18 1/3W /-5%
3480	4822 051 30393	39kΩ 5% 0.062W
3480	9965 000 27337	.39K 1/10W /-5%
3481	4822 051 30183	18kΩ 5% 0.062W
3481	9965 000 27335	18K 1/10W /-5% 06
3483	4822 116 83866	1MΩ 5% 0.5W
3483	9965 000 12626	1.0mΩ 5% 0.17W
3485	4822 051 30102	1kΩ 5% 0.062W
3485	9965 000 27233	1K 1/10W 0603
3486	4822 051 30102	1kΩ 5% 0.062W
3486	9965 000 27233	1K 1/10W 0603
3487	4822 051 30333	33kΩ 5% 0.062W
3487	9965 000 27236	33K 1/10W 0603
3488	4822 116 52243	1.5kΩ 5% 0.5W
3488	9965 000 15044	1.5k 5% 0.16W
3489	4822 051 30103	10kΩ 5% 0.062W
3489	9965 000 27225	10K 1/10W 0603
3490	4822 111 31036	3.3k 5% 0.16W
3490	4822 116 52269	3.3kΩ 5% 0.5W
3491	4822 111 31023	47k 5% 0.16W
3491	4822 116 83884	47kΩ 5% 0.5W
3492	4822 051 30183	18kΩ 5% 0.062W
3492	9965 000 27335	.18K 1/10W /-5% 06
3493	4822 052 10189	18R00 5% 0,33W
3493	9965 000 27223	NFR 18 1/3W /-5%
3495	4822 116 52191	33Ω 5% 0.5W
3495	9965 000 27873	33 1/6W /-5%
3496	3198 036 90010	Wire 0.58mm
3497	4822 116 83881	390Ω 5% 0.5W
3497	9965 000 14056	390Ω 5% 0.17W
3498	4822 050 21003	10kΩ 1% 0.6W
3498	9965 000 14050	10k 5% 0.16W
3499	4822 051 30273	27kΩ 5% 0.062W
3499	9965 000 27280	.27K 1/10W /-5%
3500	4822 053 21335	3.3MΩ 5% 0.5W
3501	4822 053 21335	3.3MΩ 5% 0.5W
3502	2122 612 00055	4.7Ω 3W
3502	9965 000 27041	NTC 4.7 /-20%
3504	2120 660 90043	PTC/PTC 9R 200V
3504	9965 000 27922	PTC 9 270V /-20%
3505	4822 116 21224	VDR 1mA/387V
3506	4822 053 20334	330kΩ 5% 0.25W
3506	9965 000 23746	330kΩ 0.25W
3507	3198 036 90010	Wire 0.58mm
3509	4822 116 83872	220Ω 5% 0.5W
3509	9965 000 25987	C.C. 220 1/2W +/-10%
3510	4822 252 11215	DSP301N-A21F
3510	9965 000 27325	SURGE ABSORBER
3519	4822 111 31036	3.3k 5% 0.16W
3519	4822 116 52269	3.3kΩ 5% 0.5W
3520	4822 117 11817	1.2kΩ 1% 0.0625W
3520	9965 000 27320	1.2K 1/10 J 0603
3522	4822 051 30334	330kΩ 5% 0.062W
3522	9965 000 27324	330K 1/10W /-5% 06
3523	4822 052 10479	47Ω 5% 0.33W
3523	9965 000 27927	NFR 47 1/3W /-5%
3524	4822 051 30008	Jumper 0603
3524	9965 000 27224	JMP1/10W /-5% 0603
3525	4822 051 30102	1kΩ 5% 0.062W
3525	9965 000 27233	1K 1/10W 0603
3526	3198 012 11570	0.15Ω 5% 1W
3526	9965 000 23785	0.15Ω 5% 1W
3527	4822 052 10222	2.2kΩ 5% 0.33W
3527	9965 000 27319	NFR 2.2K 1/3W /-5%
3528	4822 051 30103	10kΩ 5% 0.062W
3528	9965 000 27225	10K 1/10W 0603
3541	4822 051 30471	47Ω 5% 0.062W
3541	9965 000 27282	470 1/10W /-5%
3542	4822 116 52243	1.5kΩ 5% 0.5W
3542	9965 000 15044	1.5k 5% 0.16W
3543	4822 050 28203	82kΩ 1% 0.6W
3543	9965 000 23773	82kΩ 1% 0.5W
3544	3198 039 68020	RST MFLM A 6K8
3544	9965 000 23772	6.8kΩ 1% 0.5W
3545	4822 051 30222	2.2kΩ 5% 0.062W
3545	9965 000 27260	2.2K 1/10W 0603
3546	4822 116 83961	6.8kΩ 5%
3546	9965 000 12520	6.8K 1/6W 5% CF
3547	4822 051 30223	22kΩ 5% 0.062W
3547	9965 000 27323	.22K 1/10W /-5% 06
3547	9965 000 27324	330K 1/10W /-5% 06
3548	4822 051 30153	15kΩ 5% 0.062W
3548	9965 000 27321	15K 1/10W 0603
3549	4822 116 83872	220Ω 5% 0.5W
3549	9965 000 12549	220Ω 55 0.16W
3581	4822 051 30008	Jumper 0603
3581	9965 000 27224	JMP1/10W /-5% 0603
3581	9965 000 27929	56 1/10W 0603
3601	4822 051 30222	2.2kΩ 5% 0.062W
3601	9965 000 27260	2.2K 1/10W 0603
3602	4822 051 30222	2.2kΩ 5% 0.062W
3602	9965 000 27260	2.2K 1/10W 0603
3603	4822 116 52256	2.2kΩ 5% 0.5W
3603	9965 000 12515	2.2k 5% 0.16W
3604	4822 116 52175	100Ω 5% 0.5W
3604	9965 000 14049	100Ω 5% 0.16W
3605	4822 116 52175	100Ω 5% 0.5W
3605	9965 000 14049	100Ω 5% 0.16W
3606	4822 050 21003	10kΩ 1% 0.6W
3606	9965 000 14050	10k 5% 0.16W
3607	4822 051 30101	100Ω 5% 0.062W
3607	9965 000 27232	100 1/10W 0603
3608	4822 051 30154	150kΩ 5% 0.062W
3608	9965 000 27322	150K 1/10W /-5% 0603
3618	4822 050 11002	1kΩ 1% 0.4W
3618	9965 000 12519	1k 5% 0.16W
3619	4822 116 52175	100Ω 5% 0.5W
3619	9965 000 14049	100Ω 5% 0.16W
3620	4822 116 52175	100Ω 5% 0.5W
3620	9965 000 14049	100Ω 5% 0.16W
3621	4822 116 52175	100Ω 5% 0.5W
3621	9965 000 14049	100Ω 5% 0.16W
3624	4822 050 21003	10kΩ 1% 0.6W
3624	9965 000 14050	10k 5% 0.16W
3633	4822 050 11002	1kΩ 1% 0.4W
3633	9965 000 12519	1k 5% 0.16W
3634	4822 050 11002	1kΩ 1% 0.4W
3634	9965 000 12519	1k 5% 0.16W
3641	4822 116 52175	100Ω 5% 0.5W
3641	9965 000 14049	100Ω 5% 0.16W
3642	4822 051 30101	100Ω 5% 0.062W
3642	9965 000 27232	100 1/10W 0603
3643	4822 051 30101	100Ω 5% 0.062W
3643	9965 000 27232	100 1/10W 0603
3644	4822 051 30472	4.7Ω 5% 0.062W
3644	9965 000 27295	4.7K 1/10W 0603
3646	4822 051 30105	1MΩ 5% 0.062W
3646	9965 000 27259	1M 1/10W 0603
3681	5322 117 13057	820Ω 1% 0.063W 0603
3681	9965 000 27296	.820 1/10W /-1% 06
3682	2322 704 61201	120Ω 1% 0.063W 0603
3682	9965 000 27291	120 1/10W /-1% 06
3685	2322 704 62001	200Ω 1% 0603
3685	9965 000 17494	120 1/6W +/-5%
3685	9965 000 27292	.200 1/10W /-1% 06
3686	2322 704 64301	RST 0603 RC22H 430R
3686	9965 000 27294	430 1/10W /-1% 06
3687	2322 704 62202	2.2kΩ 1% 0603
3687	9965 000 27293	2.2K 1/10W /-1% 06
3688	2322 704 62001	200Ω 1% 0603
3688	9965 000 27292	200 1/10W /-1% 06
3691	4822 051 30331	330Ω 5% 0.062W
3691	9965 000 12592	330Ω 5% 0.16W
3691	9965 000 27253	330 1/10W 0603
3693	4822 116 83872	220Ω 5% 0.5W
3693	9965 000 12549	220Ω 55 0.16W
3694	4822 051 30472	4.7Ω 5% 0.062W
3694	9965 000 15057	4.7k 5% 0.16W
3694	9965 000 27295	4.7K 1/10W 0603
3822	4822 117 12891	220kΩ 1%
3822	9965 000 27235	220K 1/10W 0603
3824	4822 051 30008	Jumper 0603
3824	9965 000 27224	JMP1/10W /-5% 0603
3825	3198 036 90010	Wire 0.58mm
3827	4822 116 52175	100Ω 5% 0.5W
3827	9965 000 14049	100Ω 5% 0.16W
3828	4822 116 52175	100Ω 5% 0.5W
3828	9965 000 14049	100Ω 5% 0.16W
3841	2322 702 60184	180kΩ 5% 0603
3841	9965 000 27297	180K 1/10W /-5%
3842	4822 116 52175	100Ω 5% 0.5W
3842	9965 000 14049	100Ω 5% 0.16W
3843	4822 116 52175	100Ω 5% 0.5W
3843	9965 000 14049	100Ω 5% 0.16W
3901	4822 050 11002	1kΩ 1% 0.4W
3901	9965 000 12519	1k 5% 0.16W
3902	4822 111 31036	3.3k 5% 0.16W
3902	4822 116 52269	3.3kΩ 5% 0.5W
3903	4822 111 31036	3.3k 5% 0.16W
3903	4822 116 52269	3.3kΩ 5% 0.5W
3904	4822 051 30103	10kΩ 5% 0.062W
3904	9965 000 27225	10K 1/10W 0603
3905	4822 111 31036	3.3k 5% 0.16W
3905	4822 116 52269	3.3kΩ 5% 0.5W
3906	4822 051 30103	10kΩ 5% 0.062W
3906	9965 000 27225	10K 1/10W 0603
3907	5322 117 13056	8.2kΩ 1% 0.063W 0603
3907	9965 000 27227	8.2K 1/10W /-5% 06
3911	4822 117 13632	100kΩ 1% 0603 0.62W
3911	9965 000 27226	100K 1/10W 0603
3981	9965 000 15050	270Ω 5% 0.16W
3982	9965 000 15050	270Ω 5% 0.16W
4122	4822 051 30008	Jumper 0603
4122	9965 000 27224	JMP1/10W /-5% 0603
4123	4822 051 30008	Jumper 0603
4123	9965 000 27224	JMP1/10W /-5% 0603
4124	4822 051 30008	Jumper 0603
4124	9965 000 27224	JMP1/10W /-5% 0603
4126	4822 051 30008	Jumper 0603
4126	9965 000 27224	JMP1/10W /-5% 0603
4127	4822 051 30008	Jumper 0603
4127	9965 000 27224	JMP1/10W /-5% 0603
4129	4822 051 30008	Jumper 0603
4129	9965 000 27224	JMP1/10W /-5% 0603
4132	4822 051 30008	Jumper 0603
4132	9965 000 27224	JMP1/10W /-5% 0603
4133	4822 051 30008	Jumper 0603
4133	9965 000 27224	JMP1/10W /-5% 0603
4151	4822 051 30008	Jumper 0603
4151	9965 000 27224	JMP1/10W /-5% 0603
4152	4822 051 30008	Jumper 0603
4152	9965 000 27224	JMP1/10W /-5% 0603
4405	4822 051 30008	Jumper 0603
4405	9965 000 27224	JMP1/10W /-5% 0603
4491	4822 051 30008	Jumper 0603
4491	9965 000 27224	JMP1/10W /-5% 0603
4571	4822 051 30008	Jumper 0603
4571	9965 000 27224	JMP1/10W /-5% 0603
4610	4822 051 30008	Jumper 0603
4610	9965 000 27224	JMP1/10W /-5% 0603
4661	4822 051 20008	Jumper 0805
4661	9965 000 17478	0Ω 5% 0.1W
4692	4822 051 30008	Jumper 0603
4692	9965 000 27224	JMP1/10W /-5% 0603
4692	9965 000 27290	JMP1/10W /-5% 0603
4694	4822 051 30008	Jumper 0603
4694	9965 000 27224	JMP1/10W /-5% 0603
4694	9965 000 27290	JMP1/10W /-5% 0603

4698	4822 051 30008	Jumper 0603
4698	9965 000 27224	JMP1/10W /-5% 0603
4698	9965 000 27290	JMP1/10W /-5% 0603
4821	4822 051 30008	Jumper 0603
4821	9965 000 27224	JMP1/10W /-5% 0603
4822	4822 051 30008	Jumper 0603
4822	9965 000 27224	JMP1/10W /-5% 0603
4847	4822 051 30008	Jumper 0603
4847	9965 000 27224	JMP1/10W /-5% 0603
4852	4822 051 30008	Jumper 0603
4852	9965 000 27224	JMP1/10W /-5% 0603
4853	4822 051 30008	Jumper 0603
4853	9965 000 27224	JMP1/10W /-5% 0603
4922	4822 051 30008	Jumper 0603
4922	9965 000 27224	JMP1/10W /-5% 0603
4981	9965 000 27224	JMP1/10W /-5% 0603
4983	9965 000 27224	JMP1/10W /-5% 0603

5001	3198 018 18270	820nH 10%
5001	9965 000 27372	0.82 UH /-10%
5002	9965 000 27371	5.6UH /-10%
5201	4822 157 11835	4,7µH 5%
5201	9965 000 23768	4.7 UH +/-10%
5203	9965 000 27688	DEGAUSSING COIL
5203	9965 000 27903	DEGAUSSING COIL
5402	2422 536 00425	Linearity coil 21"
5402	9965 000 24842	CHOKE COIL 33UH
5421	2422 531 02589	TFM PSD10-204B B
5421	9965 000 23750	TFM HOR. DRIVE
5441	2422 531 02614	TFM LOT
5482	4822 157 11706	10µH 5%
5482	9965 000 14082	10UH +/-10%
5500	2422 549 44877	Filter 45mH DMF2845H
5509	4822 526 10704	Bead 50 Ω at 100MHz
5509	9965 000 17576	Bead BF-I35045W-
5515	4822 157 11411	Bead 80Ω at 100MHz
5515	9965 000 23760	FERR Bead LB3.5X1X9
5520	2422 531 02475	TFM LOT
5520	2422 531 02619	TFM PSS35-205B
5521	4822 526 10704	Bead 50 Ω at 100MHz
5521	9965 000 17576	Bead BF-I35045W-
5560	4822 526 10704	Bead 50 Ω at 100MHz
5560	9965 000 17576	Bead BF-I35045W-
5562	4822 157 11411	Bead 80Ω at 100MHz
5562	9965 000 23760	FERR Bead LB3.5X1X9
5563	4822 157 52392	27µH
5563	9965 000 23780	27 UH SPT0406A-270K
5601	4822 157 11867	5.6µH 5%
5601	9965 000 23769	5.6 UH +/-10%
5602	4822 157 11867	5.6µH 5%
5602	9965 000 23769	5.6 UH +/-10%
5603	4822 157 11867	5.6µH 5%
5603	9965 000 23769	5.6 UH +/-10%
5821	4822 157 11706	10µH 5%
5821	9965 000 14082	10UH +/-10%
5841	4822 157 11706	10µH 5%
5841	9965 000 14082	10UH +/-10%
5994	2422 264 00479	LSP 16R
5994	9965 000 27940	SPEAKER
5995	2422 264 00479	LSP 16R
5995	9965 000 27940	SPEAKER

6001	4822 130 34142	BZX79-B33
6001	9965 000 15716	33V 5% 0.5W
6127	4822 130 11416	PDZ6.8B
6127	9965 000 27231	BZX384-C6V8
6161	4822 130 11416	PDZ6.8B
6161	9965 000 27231	BZX384-C6V8
6171	4822 130 34278	BZX79-B6V8
6181	4822 130 34278	BZX79-B6V8
6422	9335 214 80133	BYV97G
6423	4822 130 31603	1N4006
6426	4822 130 11397	BAS316
6426	9340 255 30135	BAS216
6444	4822 130 80931	EGP20D
6444	9322 164 42682	EGP20DL-5100
6445	4822 130 11397	BAS316
6445	9340 255 30135	BAS216
6446	4822 130 31607	RGP10D
6446	9965 000 13880	FR104-B OR
6447	4822 130 31607	RGP10D
6447	9965 000 13880	FR104-B OR
6451	4822 130 11397	BAS316
6451	9340 255 30135	BAS216
6452	4822 130 11397	BAS316
6452	9340 255 30135	BAS216
6453	4822 130 34142	BZX79-B33
6453	9965 000 15716	33V 5% 0.5W
6460	4822 130 11397	BAS316
6460	9340 255 30135	BAS216
6461	4822 130 31607	RGP10D
6461	9965 000 13880	FR104-B OR
6462	4822 130 31607	RGP10D
6462	9965 000 13880	FR104-B OR
6463	4822 130 31607	RGP10D
6463	9965 000 13880	FR104-B OR
6464	4822 130 11397	BAS316
6464	9340 255 30135	BAS216
6481	4822 130 11397	BAS316
6481	9340 255 30135	BAS216
6491	5322 130 34331	BAV70
6491	9965 000 23761	BAV70LT1
6492	3198 020 55680	BZX384-C5V6
6500	4822 130 31083	BYW55
6500	9965 000 15164	RL255
6501	4822 130 31083	BYW55
6501	9965 000 15164	RL255
6502	4822 130 31083	BYW55
6502	9965 000 15164	RL255
6503	4822 130 31083	BYW55
6503	9965 000 15164	RL255
6520	4822 130 41601	BYV95A
6520	9335 187 60673	RGP15D
6522	4822 130 41601	BYV95A
6522	9335 187 60673	RGP15D
6540	4822 130 34167	BZX79-B6V2
6541	4822 130 30862	BZX79-B9V1
6560	9322 161 76682	SB340L-7024
6560	9965 000 09663	SR360
6560	9965 000 27866	SR360 3A/60V
6561	9322 192 67682	BYW76-PK1
6562	9322 192 67682	BYW76-PK1
6624	4822 130 11397	BAS316
6624	9340 255 30135	BAS216
6625	4822 130 34382	BZX79-B8V2
6626	4822 130 11397	BAS316
6626	9340 255 30135	BAS216
6627	4822 130 11397	BAS316
6627	9340 255 30135	BAS216
6628	4822 130 11397	BAS316
6628	9340 255 30135	BAS216
6681	4822 130 11397	BAS316
6681	9340 255 30135	BAS216
6691	9322 185 69682	LED LTL-10234WHCR
6692	9322 206 78667	TSOP34836UH1B
6692	9965 000 27288	IR RECEIVER MODULE
6908	9322 102 64685	UDZ2.7B
6908	9965 000 23738	BZX384-C2V7
6909	4822 130 30621	1N4148

7101	5322 130 60159	BC846B
7161	5322 130 60159	BC846B
7162	5322 130 60159	BC846B
7200	9352 749 89112	TDA9377PS/N2/AI/1372
7200	9965 000 27921	TDA9377PS/N2/AI1384
7201	5322 130 60159	BC846B
7202	5322 130 60159	BC846B
7421	9322 183 16687	BUL312FP
7421	9340 563 21127	BUT11APX-1200
7421	9965 000 27275	BUTHAPX-1200
7422	4822 130 42804	BC817-25
7423	5322 130 60845	BC807-25
7423	9965 000 27861	BC807-25 215
7440	9965 000 22888	BF423
7451	4822 130 60373	BC856B
7461	4822 130 60373	BC856B
7462	4822 130 60373	BC856B
7463	4822 130 44461	BC546B
7464	4822 130 40823	BD139
7464	9965 000 27222	2SD669A-C
7465	4822 130 40824	BD140
7465	9965 000 27257	2SB649A-C
7466	5322 130 60159	BC846B
7491	5322 130 60159	BC846B
7493	4822 209 16978	LF33CV
7494	4822 130 40981	BC337-25
7496	4822 130 40823	BD139
7496	9965 000 27222	2SD669A-C
7515	8238 274 02070	TCET1103G
7520	9352 720 43118	TEA1506T/N1
7521	9322 194 22687	STP7NK80ZFP
7521	9965 000 27308	FET POW FQPF7N80
7523	4822 130 60373	BC856B
7540	4822 130 40959	BC547B
7541	4822 130 11155	PDTC114ET
7601	3198 010 44010	PDTA114ET
7641	9322 147 25682	M24C16-WBN6
7641	9965 000 22895	M24C16
7821	9322 191 49682	AN5891K
7841	9322 189 97668	AN5829S
7901	9322 181 41682	AN7522N

CRT panel [B]

Various

1302	2422 500 80076	Socket CRT 9p f
1302	9965 000 23828	SOCKET CRT

2300	4822 126 14241	330pF 0603 50V
2300	9965 000 20346	330 PF 50V +/-5% 0603
2301	4822 126 14315	390pF 5% 50V 0603
2301	9965 000 20351	390P 50V +/-5% 0603
2302	4822 126 14315	390pF 5% 50V 0603
2302	9965 000 20351	390P 50V +/-5% 0603
2303	4822 126 13449	1nF 10% 2kV
2303	9965 000 22813	10nF 10% 2kV
2304	4822 121 70386	47nF 10% 250V
2304	9965 000 27255	250V 47NF /-5%
2318	9965 000 20356	1000 PF 50V +/-10% B

3300	4822 053 12183	18K00 5% 3W
3300	9965 000 22919	M.O. 15K 3W +/-5%
3300	9965 000 23309	18kΩ 5% 3W
3301	3198 013 01520	1.5kΩ 20% 0.5W
3301	9965 000 24633	1.5K 1/2W +/-10%
3303	4822 051 30331	330Ω 5% 0.062W
3303	9965 000 27253	330 1/10W 0603
3304	4822 053 12183	18K00 5% 3W
3304	9965 000 22919	M.O. 15K 3W +/-5%
3304	9965 000 23309	18kΩ 5% 3W
3305	3198 013 01520	1.5kΩ 20% 0.5W
3305	9965 000 24633	1.5K 1/2W +/-10%
3307	4822 051 30331	330Ω 5% 0.062W
3307	9965 000 27253	330 1/10W 0603
3308	4822 053 12183	18K00 5% 3W
3308	9965 000 22919	M.O. 15K 3W +/-5%
3308	9965 000 23309	18kΩ 5% 3W
3309	3198 013 01520	1.5kΩ 20% 0.5W
3309	9965 000 24633	1.5K 1/2W +/-10%
3311	4822 051 30391	390Ω 5% 0.062W
3311	9965 000 27254	390 1/10W 0603
3313	4822 052 10689	68R00 5% 0,33W
3313	9965 000 27252	NFR 68 1/3W /-5%
3318	4822 052 10221	220Ω 5% 0.33W
3318	9965 000 27251	NFR 220 1/3W /-5%
3319	3198 013 01520	1.5kΩ 20% 0.5W
3319	9965 000 24633	1.5K 1/2W +/-10%
4300	4822 051 30008	Jumper 0603
4300	9965 000 27224	JMP1/10W /-5% 0603
4301	4822 051 30008	Jumper 0603
4301	9965 000 27224	JMP1/10W /-5% 0603
4302	4822 051 30008	Jumper 0603
4302	9965 000 27224	JMP1/10W /-5% 0603
4303	4822 051 30008	Jumper 0603
4303	9965 000 27224	JMP1/10W /-5% 0603
4306	4822 051 30008	Jumper 0603
4306	9965 000 27224	JMP1/10W /-5% 0603

6301	4822 130 11397	BAS316
6301	9340 255 30135	BAS216
6307	4822 130 11397	BAS316
6307	9340 255 30135	BAS216
6318	4822 130 10837	UDZS8.2B

7308	4822 130 41782	BF422
7310	4822 130 41782	BF422
7312	4822 130 41782	BF422
7313	4822 130 41782	BF422
7314	4822 130 41646	BF423
7314	9965 000 22888	BF423
7314	9965 000 27851	BF423
7315	4822 130 41782	BF422
7316	4822 130 41646	BF423
7316	9965 000 22888	BF423
7316	9965 000 27851	BF423
7317	4822 130 41782	BF422
7318	4822 130 41646	BF423
7318	9965 000 22888	BF423
7318	9965 000 27851	BF423

11. Revision List

Manual xxxx xxx xxxx.0
- First release.

Manual xxxx xxx xxxx.1
- Some type numbers added in chapter 8
- Sparte parts list added
- Some small layout changes made.